Schita
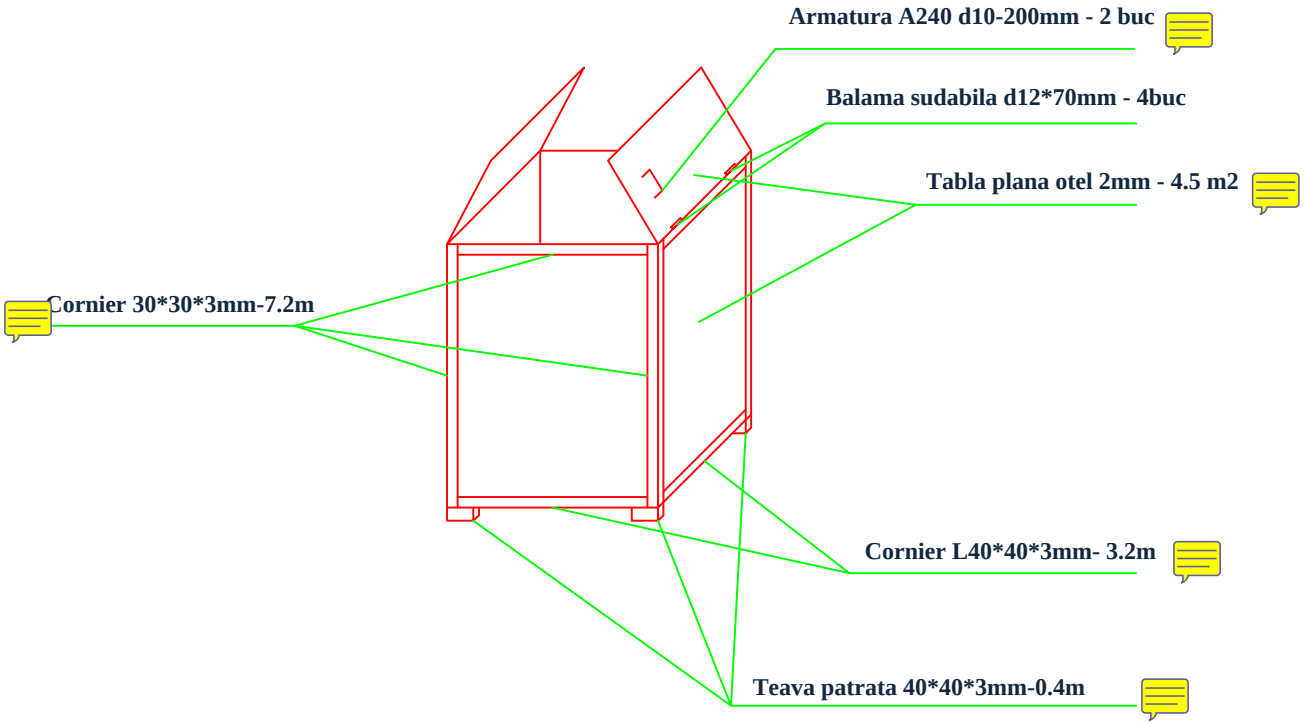
Digitally signed by Postovan Vitalie
Date: 2025.09.11 11:28:47 EEST
Reason: MoldSign Signature
Location: Moldova
MOLDOVA EUROPEANĂ