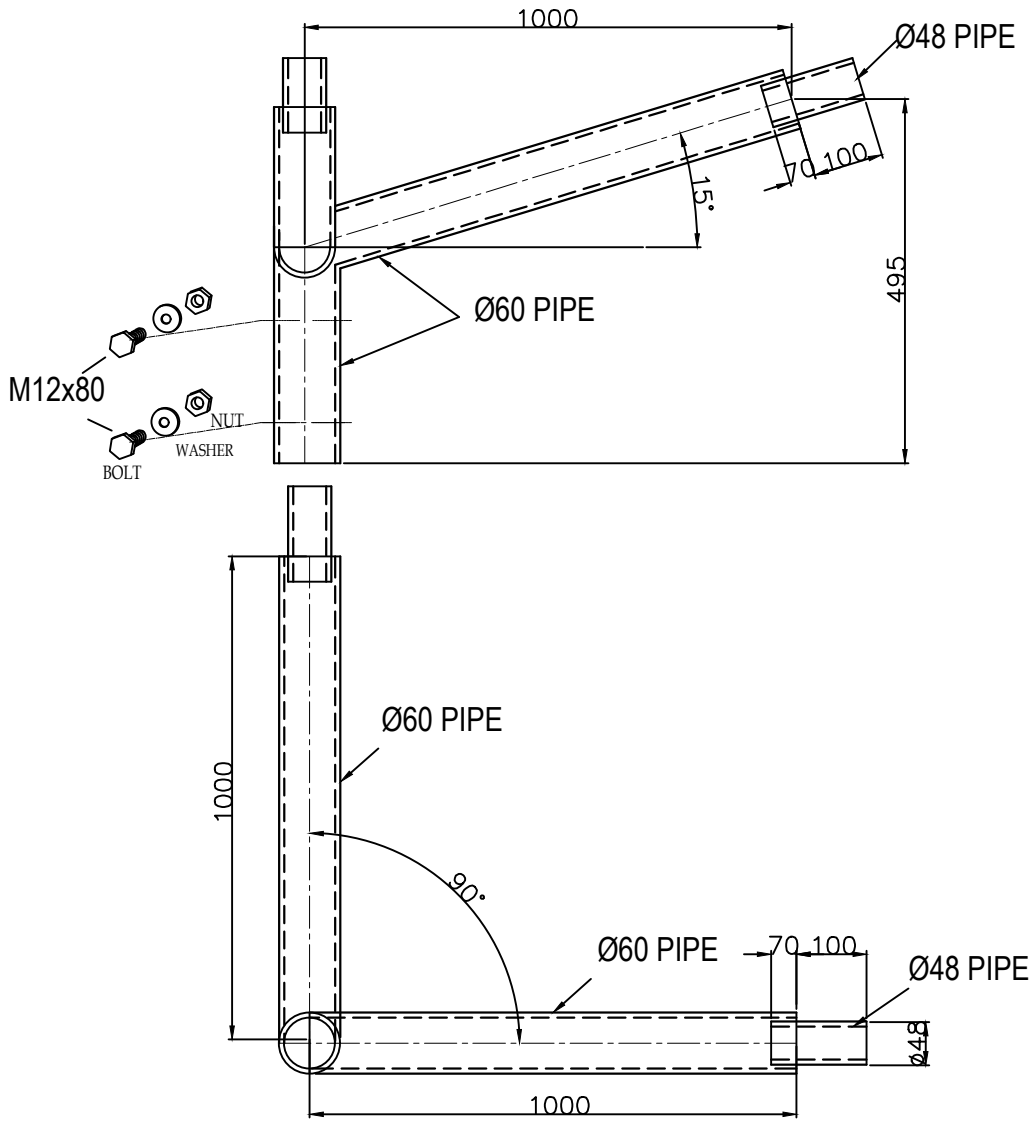

GENERAL NOTES / GENEL NOTLAR

* TÜM ÖLÇÜLER mm.DİR
* ALL DIMENSIONS ARE IN mm
* TÜM ÇELİK ELEMANLAR . CİVATA,SOMUN VE RONDELALAR SICAK DAEDIRMA GALVANİZDİR (EN ISO 1461)
* ALL STEEL ITEMS.BOLTS.NUTS & WASHERS TO BE HOT DIP GALVD.AS PER (EN ISO 1461)
* TASARIM KRİTELLERİNE GÖRE CİVATALAR (ISO 898) 5.8 & 6.8 & 8.8 OLARAK KULLANILABİLİR
* 5.8 & 6.8 & 8.8 QLTY. BOLTS CAN BE USED ACCORDING TO DESIGN CRITERIA AS PER (ISO 898)

Digitally signed by Bolgarin Mihail
Date: 2024.03.08 14:32:40 EET
Reason: MoldSign Signature
Location: Moldova

MATERIAL/MALAZEME	
SHAFT / GÖVDE	S235
FLANGE / FLANŞ	S235
OTHER ACCESSORIES / DİĞER AKSESUARLAR	S235

	NAME/ İSİM	SIGN/ İMZA	DATE/ TARİH
DESIGN/ HAZIRLAYAN	E. AYGÜN		04 / 09 / 2021
DRAWN BY / CİZEN	E.AYGÜN		04 / 09 / 2021
CHECKED BY / KONTROL	E.AYGÜN		04 / 09 / 2021
APPROVED BY / ONAY	S.SÜLEYMANOĞLU		04 / 09 / 2021

DESIGN NOTES/ TASARIM NOTLARI

DESIGN WIND SPD. / TASARIM RÜZGAR HIZI	
FACTOR OF SAFETY / GÜVENLİK KATSAYISI	
DESIGN STANDART / TASARIM STANDARDI	

1m DOUBLE ARM, 90°

SIP/TEK NO		
PAFTA NO		
TARİH	04 / 09 / 2021	
SHEET 1 OF 1	ÖLÇEK / SCALE	REV.