Safety detection solutions

Safety interlock switches
Key-operated with solenoid, turret head (1)
XCSLF metal, emergency release pushbutton, connector output

CALUGAR HORATIU-SEBASTIAN
Digitally signed by CALUGAR HORATIU-SEBASTIAN
Date: 2025.09.22 16:54:31 +03'00'
Digitally signed by Lazarev Mihail
Date: 2025.09.22 17:32:19 EEST
Reason: MoldSign Signature
Location: Moldova
MOLDOVA EUROPEANĂ

Type of switch	Locking on de-energization and unlocking on energization of solenoid *(2)* with emergency release by mushroom head pushbutton *(3)*	

LED indication	Orange LED: "guard open" indication Green LED: "guard closed and locked" indication	
Power supply for the solenoid and the LEDs	24 V c or a (50/60 Hz on a)	
Type of auxiliary contact actuated by the solenoid (locking contacts). Contact states represented with actuating key inserted and solenoid not energized.	1 NC + 2 NO break before make 	2 NC + 1 NO break before make

References of switches without actuating key *(4)* (➔ NC contact with positive opening operation)
Types of main contact actuated by the key
Contact states represented with actuating key inserted with trigger action mushroom head pushbutton, diameter 40 mm, "turn to release" reset
With 19-pin (6 contacts) M23 connector output

3-pole contact **1 NC + 2 NO** break before make, slow break		**XCSLF353541M3** ➔	–
3-pole contact **2 NC + 1 NO** break before make, slow break		–	**XCSLF373741M3** ➔
Weight (kg)		1.220	1.220

Solenoid and LED characteristics

Load factor		100%
Rated operational voltage *(5)*		24 V c or a
Voltage limits	Conforming to EN/IEC 60947-1	- 15%, + 10% of the rated operational voltage (including ripple on c)
Consumption		< 5.4 W at 20 °C and max. voltage

References of actuating keys and separate parts

See page 62.

(1) Head adjustable in 90° steps through 360°. Blanking plug for operating head slot included with switch.
(2) A key-operated lock (two keys included with switch) enables forced opening of the interlocking mechanism by authorized personnel, allowing withdrawal of the actuating key and subsequent opening of the NC safety contacts (auxiliary release).
(3) Trigger action, diameter 40 mm, "turn to release".
(4) Actuating keys to be ordered separately (see page 62).
(5) Common power supply for the solenoid and the LEDs.

Note : Due to existing cable connections and to increase your personal safety, safety screws have been used on the front of the product to help prevent unauthorized access.

Other versions: consult your Customer Care Center.

Safety detection solutions

Safety interlock switches

Key-operated with solenoid, turret head *(1)*
XCSLE plastic, double insulated, 3 cable entries

Type of switch	Locking on de-energization and unlocking on energization of solenoid *(2)*				
LED indication	Orange LED: “guard open” indication Green LED: “guard closed and locked” indication				
Power supply for the solenoid and the LEDs	24 V c or a (50/60 Hz on a)				
Type of auxiliary contact actuated by the solenoid (locking contacts). Contact states represented with actuating key inserted and solenoid not energized.	1 NO + 1 NC break before make 33 41 / 34 42	2 NC simultaneous 31 41 / 32 42	1 NC + 2 NO break before make 61 43 53 / 62 44 54	2 NC + 1 NO break before make 41 51 63 / 42 52 64	3 NC simultaneous 41 51 61 / 42 52 62
References of switches without actuating key *(3)* **(⊖ NC contact with positive opening operation)** **Types of main contact actuated by the key** **Contact states represented with actuating key inserted** **With 3 cable entries tapped ISO M20 x 1.5**					
2-pole contact **1 NC + 1 NO** break before make, slow break 13 21 / 14 22	**XCSLE2525312** ⊖	–	–	–	–
2-pole contact **2 NC** simultaneous, slow break 11 21 / 12 22	–	**XCSLE2727312** ⊖	–	–	–
3-pole contact **1 NC + 2 NO** break before make, slow break 21 13 33 / 22 14 34	–	–	**XCSLE3535312** ⊖	–	–
3-pole contact **2 NC + 1 NO** break before make, slow break 21 31 13 / 22 32 14	–	–	–	**XCSLE3737312** ⊖	–
3-pole contact **3 NC** simultaneous, slow break 11 21 31 / 12 22 32	–	–	–	–	**XCSLE3838312** ⊖
Weight (kg)	0.530	0.530	0.530	0.530	0.530

Solenoid and LED characteristics

Load factor		100%
Rated operational voltage *(4)*		24 V c or a or 120 V a or 230 V a
Voltage limits	Conforming to EN/IEC 60947-1	- 15%, + 10% of the rated operational voltage (including ripple on c)
Consumption		< 5.4 W at 20 °C and max. voltage

References of complete switches with solenoid supply voltage of 120 V or 230 V

To order a switch with a solenoid voltage of 110/120 V a, replace the sixth number in the selected reference with **3**.
Example: XCSLE2525312 becomes **XCSLE2525332**. Some 110/120 V a references may not be available.
To order a switch with a solenoid voltage of 220/240 V a, replace the sixth number in the selected reference with **4**.
Example: XCSLE2525312 becomes **XCSLE2525342**. Some 220/240 V a references may not be available.

References of switches with locking on energization and unlocking on de-energization

To order a safety interlock switch with locking on energization and unlocking on de-energization of the solenoid, replace the fifth number in the selected reference with **5**.
Example: XCSLE2525312 becomes **XCSLE2525512**. Some references with locking on energization may not be available.

References of complete switches with three cable entries tapped for 1/2” NPT conduit

To order a switch with 1/2” NPT cable entries, replace the last number in the reference with **3**.
Example: XCSLE2727312 becomes **XCSLE2727313.** Some 1/2" NPT references may not be available.

References of actuating keys and separate parts

See page 62.

(1) Head adjustable in 90° steps through 360°. Blanking plug for operating head slot included with switch.
(2) A special tool included with the safety interlock switch enables forced opening of the interlocking mechanism by authorized personnel, allowing withdrawal of the actuating key and subsequent opening of the NC safety contacts (auxiliary release).
(3) Actuating keys to be ordered separately (see page 62).
(4) Common power supply for the solenoid and the LEDs.

Other versions: consult your Customer Care Center.

Presentation: page 52 | Characteristics: page 53 | Dimensions: page 63 | Schemes: page 66

Safety detection solutions

Safety interlock switches

Key-operated with solenoid, turret head *(1)*

XCSLE plastic, double insulated, connector output

Type of switch	Locking on de-energization and unlocking on energization of solenoid *(2)*	
LED indication	Orange LED: “guard open” indication Green LED: “guard closed and locked” indication	
Power supply for the solenoid and the LEDs	24 V c or a (50/60 Hz on a)	
Type of auxiliary contact actuated by the solenoid (locking contacts). Contact states represented with actuating key inserted and solenoid not energized.	1 NC + 2 NO break before make 	2 NC + 1 NO break before make
References of switches without actuating key *(3)* (⊖ **NC contact with positive opening operation)** **Types of main contact actuated by the key** **Contact states represented with actuating key inserted** **With 16-pin (4 contacts) or 19-pin (6 contacts) M23 connector output**		
3-pole contact **1 NC + 2 NO** break before make, slow break	**XCSLE353531M3** ⊖	–
3-pole contact **2 NC + 1 NO** break before make, slow break	–	**XCSLE373731M3** ⊖
Weight (kg)	0.530	0.530

Solenoid and LED characteristics

Load factor		100%
Rated operational voltage *(4)*		24 V c or a
Voltage limits	Conforming to EN/IEC 60947-1	- 15%, + 10% of the rated operational voltage (including ripple on c)
Consumption		< 5.4 W at 20 °C and max. voltage

References of actuating keys and separate parts

See page 62.

(1) Head adjustable in 90° steps through 360°. Blanking plug for operating head slot included with switch.
(2) A special tool included with the safety interlock switch enables forced opening of the interlocking mechanism by authorized personnel, allowing withdrawal of the actuating key and subsequent opening of the NC safety contacts (auxiliary release).
(3) Actuating keys to be ordered separately (see page 62).
(4) Common power supply for the solenoid and the LEDs.

Note : Due to existing cable connections and to increase your personal safety, safety screws have been used on the front of the product to help prevent unauthorized access.

Other versions: consult your Customer Care Center.

Safety detection solutions

Safety interlock switches

Key-operated with solenoid, turret head
XCSLF metal and XCSLE plastic
Accessories

References of actuating keys

Description	Straight actuating key	Actuating key with wide fixing	Pivoting actuating key	Latch for sliding doors
For XCSLF and XCSLE key-operated switches	**XCSZ01**	**XCSZ02**	**XCSZ03**	**XCSZ05**
Weight (kg)	0.020	0.020	0.095	0.600

Separate parts

PF080313

XCSZ90

Description	Used for	Unit reference	Weight (kg)
Blanking plugs for operating head slot (Sold in lots of 10)	XCSLF, XCSLE	**XCSZ30**	0.050
Keys for forced opening of interlocking device (Sold in lots of 10)	XCSLF	**XCSZ25**	0.100
Padlocking device to help prevent insertion of actuating key, for up to 3 padlocks (padlocks not included)	XCSLF, XCSLE	**XCSZ90**	0.055
Tool for forced opening of interlocking device (Sold in lots of 10)	XCSLE	**XCSZ100**	0.050
Cover safety kit consisting of: b 4 x 5-lobe torque screws b 1 magnetic screwdriver bit	XCSLF	**XCSZ210**	0.020
	XCSLE	**XCSZ211**	0.020

Characteristics

M23 connectors

Type of connection	Screw thread (metal clamping ring)
Degree of protection	IP 65 (with clamping ring correctly tightened)
Ambient air temperature	-25…+110 °C
Connection	To solder terminals. Maximum conductor c.s.a.: 1 mm^2 Cable gland: no. 13 metal (Pg 13.5) Clamping capacity: 9 to 12 mm
LED signaling	–
Nominal voltage	60 V a, 75 V c
Nominal current	7.5 A
Insulation resistance	> 10^{12} Ω
Contact resistance	y 5 mΩ

References

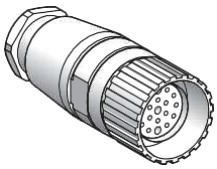

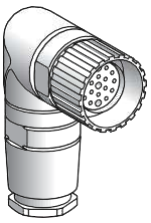

Type of connector	Number of contacts	Cable connection	Type	Reference	Weight (kg)
Female, M23	19	To solder terminals	Straight	**XZCC23FDM190S**	0.080
			Elbowed	**XZCC23FCM190S**	0.150

Dimensions

XZCC23FDM190S

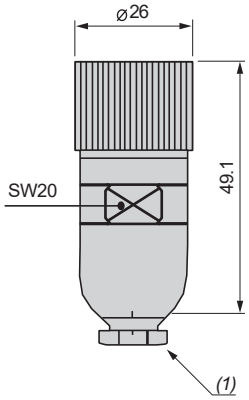

XZCC23FCM190S

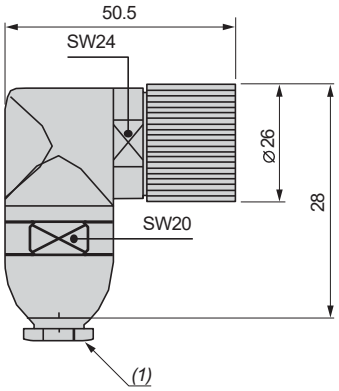

(1) No. 13 metal cable gland

Connections

XZCC23FpM190S

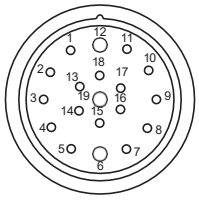

Safety detection solutions

Safety interlock switches

Key-operated with solenoid, turret head
XCSLF metal
XCSLE plastic

Dimensions

Metal safety interlock switches

XCSLFpppppppp

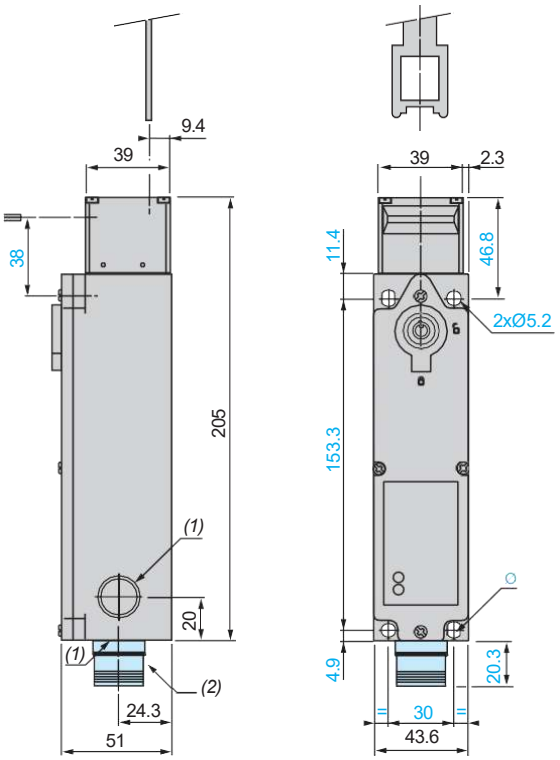

Ø: 2 elongated holes Ø 7 x 5.2

XCSLFpppppppp, with emergency release mushroom head pushbutton

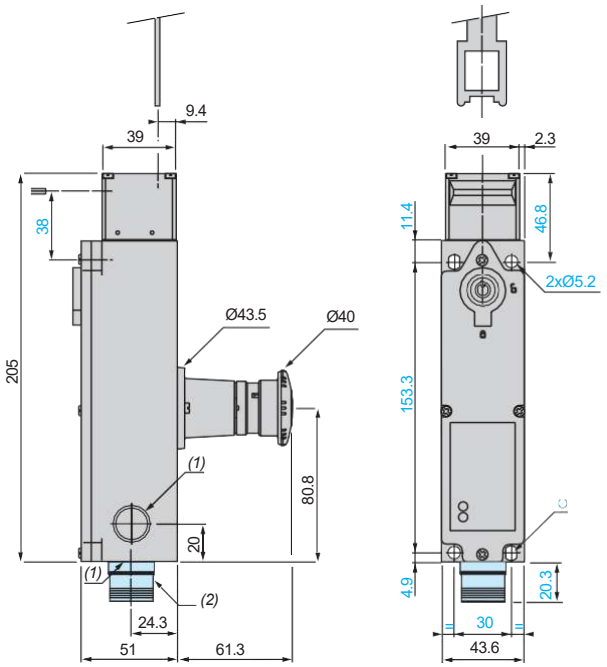

Ø: 2 elongated holes Ø 7 x 5.2

Plastic safety interlock switches

XCSLEpppppppp

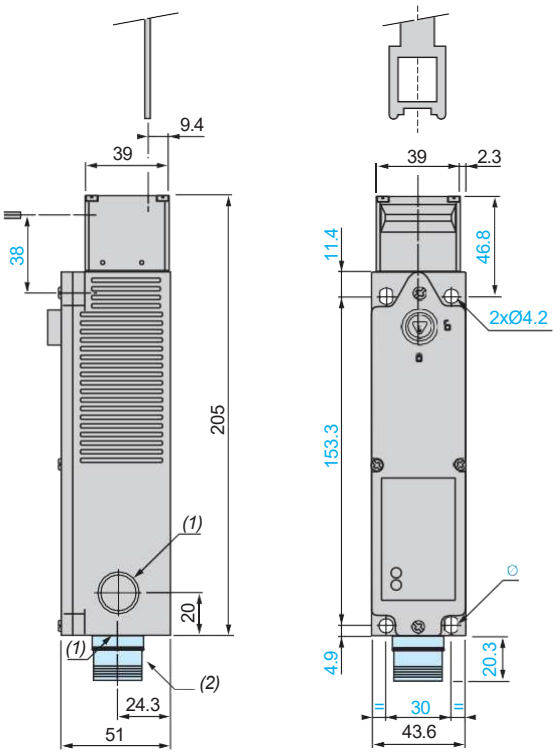

Ø: 2 elongated holes Ø 6.2 x 4.2

(1) 3 tapped entries for cable gland.
(2) Version with M23 connector.

Dimensions (continued)

XCSZ01

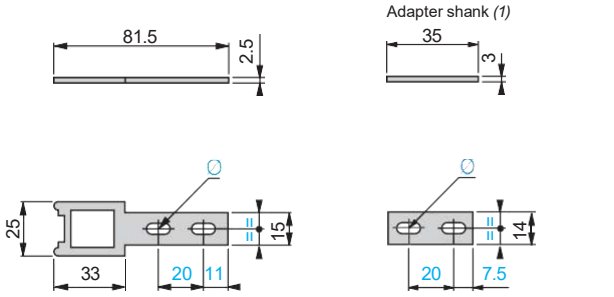

(1) Adapter (included with XCSZ01 actuating key) for replacing, without drilling an additional fixing hole, XCKJ or XCSL5/7 safety interlock switches with ZCKY07 actuating key by an XCSLF/LE safety interlock switch with XCSZ01 actuating key.

Ø: 2 elongated holes Ø 5.3 x 10

XCSZ02

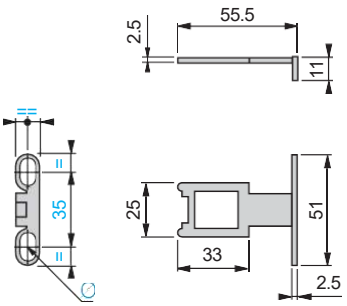

Ø: 2 elongated holes Ø 5.3 x 10

XCSZ03

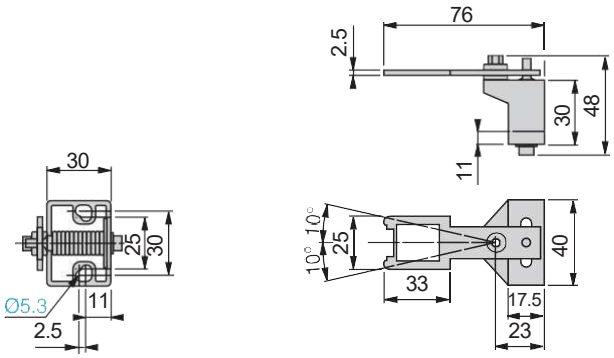

Fixing axis % related to actuating key.

XCSZ05

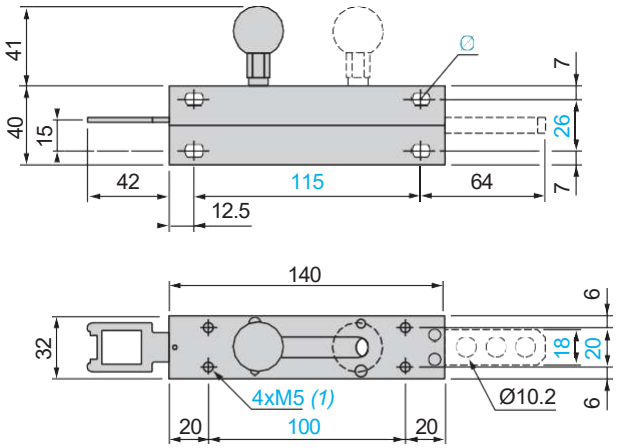

(1) Depth: 10
Ø: 4 elongated holes Ø 5.2 x 8

Actuation radius

XCSZ01

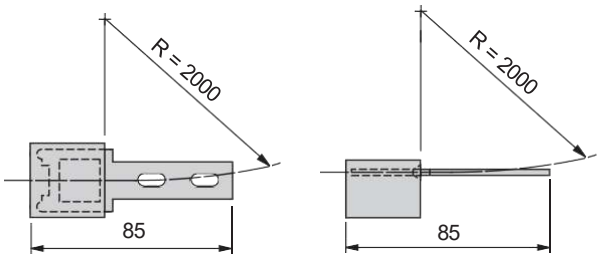

XCSZ02

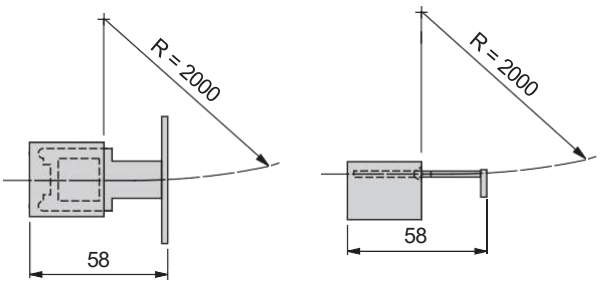

XCSZ03

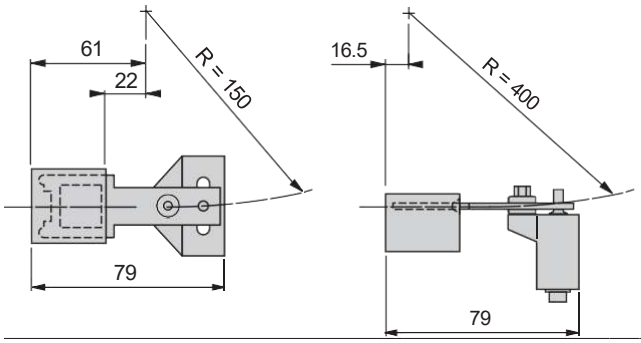

R = minimum radius

Safety detection solutions

Safety interlock switches

Key-operated with solenoid, turret head
XCSLF metal
XCSLE plastic

Operation

Functional diagrams

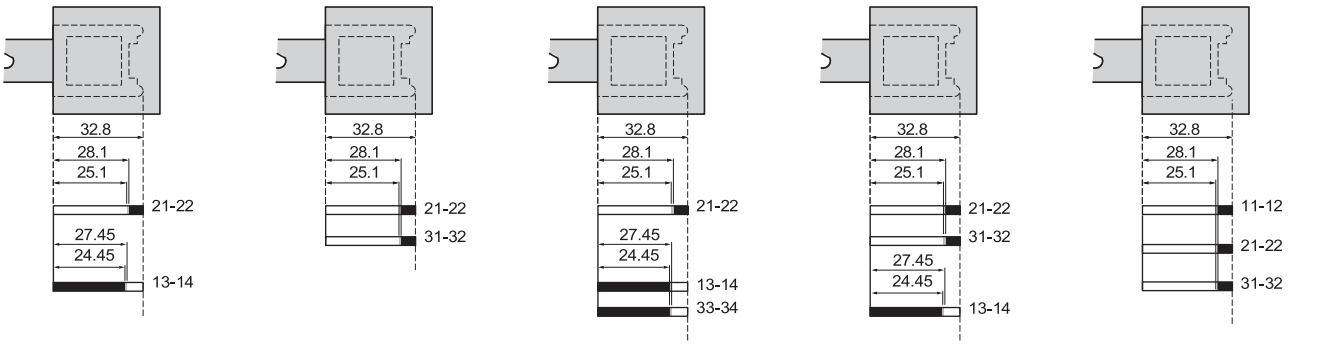

Contact operation

Closed Open Transient state

Connection examples

The contact states are represented with the actuating key inserted and the solenoid not energized

Note: These schemes are given as examples only, the designer should refer to the relevant safety standards for guidance.

Wiring up to PL=b, category 1 conforming to EN/ISO 13849-1

Wiring example with protection fuse to help prevent shunting of the NC contact, due to either cable damage or tampering

1 NC + 1 NO locking on de-energization and 1 NC + 1 NO auxiliary contacts

XCSLF25253.. and **XCSLE25253**..

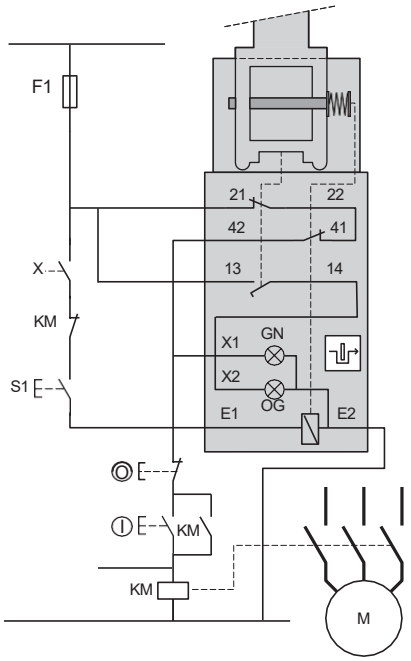

E1-E2: Solenoid supply
21-22: Safety contact, key position monitoring
13-14: Safety contact, key position signaling
41-42: Solenoid position monitoring contact
13-X2/E2: LED (orange): key withdrawn
41-X1/E2: LED (green): key inserted and locked
22-41 : Safety pre-wiring mandatory
S1: Manual release button
X: Unlocking signal

Wiring up to PL=d, category 3 conforming to EN/ISO 13849-1

Wiring example with redundancy for the safety interlock switch contacts, without monitoring or redundancy in the power circuit.

2 NC + 1 NO locking on de-energization and 2 NC + 1 NO auxiliary contacts

XCSLF37373.. and **XCSLE37373**..

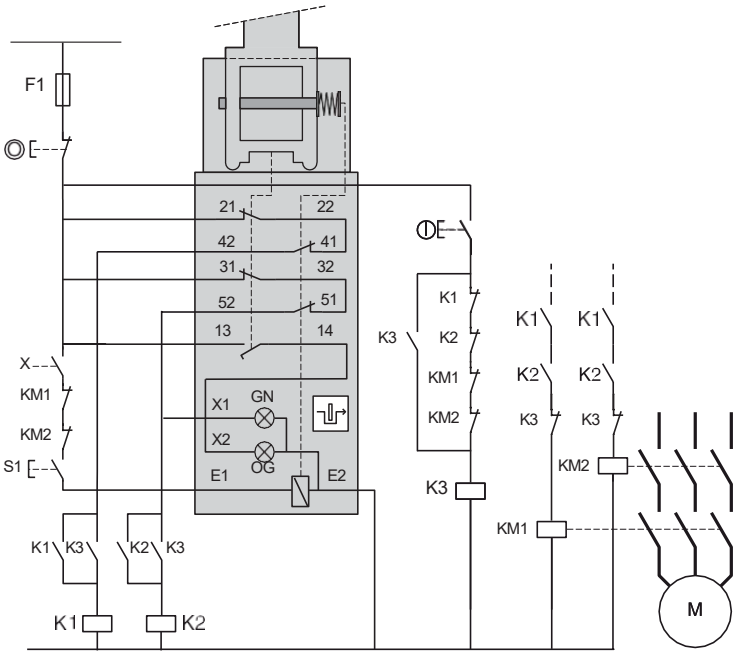

E1-E2: Solenoid supply
21-22 and 31-32: Redundant safety contacts, key position monitoring
41-42 and 51-52: Redundant contacts, solenoid position monitoring
13-14: Safety contact, key position signaling
13-X2/E2: LED (orange): key withdrawn
51-X1/E2: LED (green): key inserted and locked
22-41 and 32-51: Safety pre-wiring mandatory
S1: Manual release button
X: Zero speed or unlocking signal

Safety detection solutions

Safety interlock switches

Key-operated with solenoid, turret head
XCSLF metal
XCSLE plastic

Connection examples (continued)

The contact states are represented with the actuating key inserted and the solenoid not energized.

Wiring up to PL=e, category-4 conforming to EN/ISO 13849-1 and EN/IEC 62061 (assuming that failure of the single mechanical point can be excluded)

Wiring example with 2-LED module associated with an XPSUAp *(1)* safety control unit

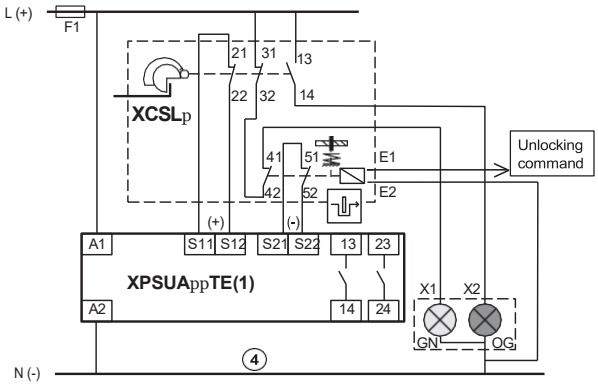

(1) XPSUAFpTE /XPSUAKpTE/XPSUATpTE

Wiring to PL=e, category 4 conforming to EN/ISO 13849-1 and SIL CL3 conforming to EN/IEC 62061. Wiring method used in conjunction with an XPS safety control unit (the safety interlock switch should be used in conjunction with a safety limit switch to achieve electrical/mechanical redundancy).

Method for machines with long rundown time (high inertia)

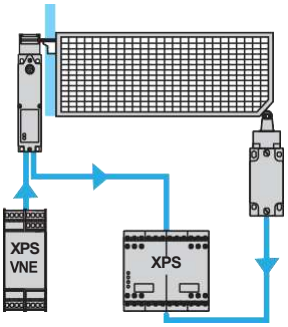

Interlocking device for actuating key fitted on guard and zero speed detection.

E1-E2: Solenoid supply
13-14: Safety contact, key position signaling
13-X2/E2: LED (orange): key not inserted
41-X1/E2: LED (green): key inserted and locked
21-22 and 31-32: Redundant safety contacts, key position monitoring
41-42 and 51-52: Redundant contacts, solenoid position monitoring

19-pin M23 connectors

XCSLF3535pp and **XCSLE3535pp**

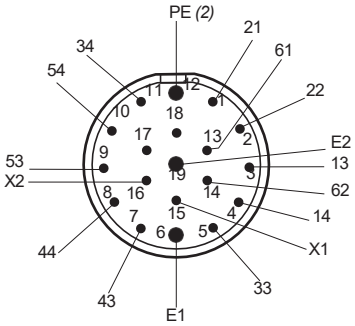

XCSLF3737pp and **XCSLE3737pp**

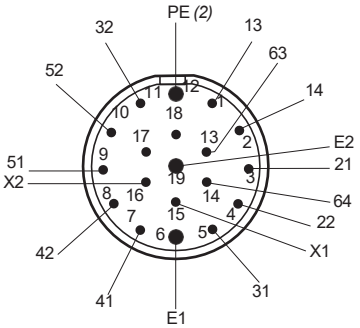

XCSLF3837pp and **XCSLE3837pp**

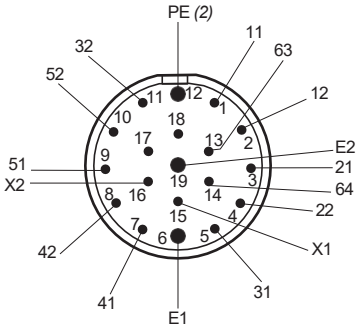

XCSLF3838pp and **XCSLE3838pp**

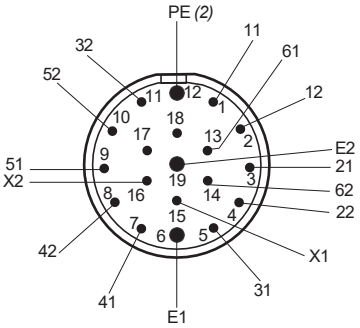

(2) PE (Protective Earth) connection

Safety detection solutions

Safety interlock switches

Key-operated with solenoid, turret head
XCSE and XCSTE rectangular design

XCSE metal

Safety interlock switches operated by actuating key

Page 70

XCSTE plastic

Safety interlock switches operated by actuating key

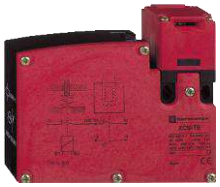

Page 76

Environmental characteristics

Safety interlock switch type		XCSE (metal)	XCSTE (plastic)
Conformity to standards	Products	EN/IEC 60947-5-1, UL 508, CSA C22-2 no. 14	EN/IEC 62061, EN/IEC 60947-1
	Machine assemblies	EN/IEC 60204-1, EN/ISO 14119	
Product certifications		UL, CSA, CCC, EAC	UL, CSA, CCC, EAC
Maximum safety level *(1)*		PL=e, category 4 conforming to EN/ISO 13849-1 and SIL 3 conforming to EN/IEC 61508	
Reliability data B_{10D}		5,000,000 (data value for a service life of 20 years can be limited by contact and mechanical wear)	
Ambient air temperature	For operation	-25…+40 °C	-25…+60 °C
	For storage	-40…+70 °C	
Vibration resistance		5 gn (10…500 Hz) conforming to EN/IEC 60068-2-6	
Shock resistance		10 gn (duration 11 ms) conforming to EN/IEC 60068-2-27	
Electric shock protection		Class I conforming to EN/IEC 61140	Class II conforming to EN/IEC 61140
Degree of protection		**IP 67 conforming to EN/IEC 60529 and EN/IEC 60947-5-1** *(2)*	
Cable entry		2 entries tapped ISO M20 x 1.5 (clamping capacity 7 to 13 mm) or tapped for Pg 13.5 cable gland (clamping capacity 8 to 12 mm) or for 1/2" NPT conduit	1 entry tapped M16 x 1.5 (clamping capacity 4.5 to 10 mm) or tapped for Pg 11 cable gland (clamping capacity 7 to 10 mm) or for 1/2" NPT conduit using metal adapter DE9RA1012 with Pg 11 tapped entry
Connecting cable		–	4 x 0.5 mm^2
Materials		Zamak case	Polyamide PA66 fibreglass impregnated case
		Actuating keys (all types): steel XC60, surface treated	

(1) Using an appropriate and correctly connected safety control unit.

(2) Live parts of these switches are protected to some extent against the penetration of dust and water. However, when installing take all necessary precautions to help prevent the penetration of solid bodies, or liquids with a high dust content, into the actuating key aperture. Use of XCSZ27 (with XCSE) or XCSZ28 (with XCSTE) blanking plugs for unused key slots can reduce the penetration of unwanted elements (one blanking plug is delivered with the product). Not recommended for use in saline atmospheres.

Safety detection solutions

Safety interlock switches

Key-operated with solenoid, turret head
XCSE and XCSTE rectangular design

Contact block characteristics

Rated operational characteristics		2 and 3 contacts, slow break	**XCSE**, **XCSTE**: a AC-15, B300: Ue = 240 V, Ie = 1.5 A or Ue = 120 V, Ie = 3 A All models: c DC-13, Q300: Ue = 250 V, Ie = 0.27 A or Ue = 125 V, Ie = 0.55 A conforming to EN/IEC 60947-5-1
Conventional thermal current in enclosure			**XCSE**, **XCSTE** 2 and 3 slow break contact versions: Ithe = 6 A
Rated insulation voltage		2 and 3 contacts	3 contacts (**XCSE**), 2 contacts (**XCSTE**): Ui = 500 V conforming to EN/IEC 60947-1; Ui = 300 V conforming to UL 508, CSA C22-2 no. 14
Rated impulse withstand voltage		2 and 3 contacts	3 contacts (**XCSE**), 2 contacts (**XCSTE**): Uimp = 6 kV conforming to EN/IEC 60947-5-1
Positive operation			NC contacts with positive opening operation conforming to EN/IEC 60947-5-1, Section 3
Resistance across terminals			y 30 mΩ conforming to EN/IEC 60947-5-4
Short-circuit protection		2 and 3 contacts	3 contacts (**XCSE**), 2 contacts (**XCSTE**): 10 A cartridge fuse type gG (gl)
Connection	Screw clamp terminals	2 and 3 contacts	3 contacts **(XCSE)**, 2 contacts **(XCSTE)**: Clamping capacity, min: 1 x 0.5 mm^2, max: 2 x 1.5 mm^2 with or without cable end

Complementary characteristics

Actuation speed	Maximum: 0.5 m/s, minimum: 0.01 m/s
Resistance to forcible withdrawal of actuating key (locked)	**XCSE**: F_{1max} = 2600 N; F_{Zh} = 2000 N; **XCSTE**: F_{1max} = 650 N; F_{Zh} = 500 N
Mechanical durability	**XCSE: > 1 million operating cycles** **XCSTE: 1 million operating cycles**
Maximum operating rate	For maximum durability: 600 operating cycles per hour
Minimum force for extraction of actuating key (not locked)	u 20 N
Materials	Body and head: Zamak (XCSE) Body and head: polyamide PA66, fibreglass impregnated (XCSTE)

Electrical durability

- b Conforming to EN/IEC 60947-5-1 Appendix C
- b Utilization categories AC-15 and DC-13
- b Maximum operating rate: 3600 operating cycles/hour
- b Load factor: 0.5

XCSE 3-contact and XCSTE 2-contact version, slow break

AC supply
50/60 Hz a
inductive circuit

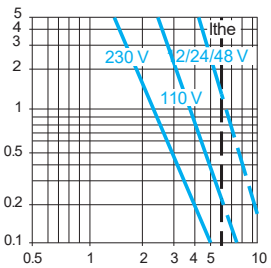

DC supply c
Power broken in W for 5 million operating cycles.

Voltage	**V**	**24**	**48**	**120**
	W	13	9	7

Safety detection solutions

Safety interlock switches

Key-operated with solenoid, turret head *(1)*

XCSE metal, 2 cable entries

Type of switch	Locking on de-energization and unlocking on energization of solenoid *(2)*				

LED indication	Orange LED: "guard open" signaling (not available on 3NC main contact models). Green LED: "guard closed and locked" signaling.				
Solenoid supply voltage	24 V c or a (50/60 Hz on a)		48 V c or a (50/60 Hz on a)	110/120 V c or a *(3)* (50/60 Hz on a)	220/240 V c or a *(3)* (50/60 Hz on a)
Types of auxiliary contacts actuated by the solenoid (locking contacts). Contact states represented with actuating key inserted and solenoid not energized.	NC + NO 43 51 44 52	2 NC 41 51 42 52	NC + NO 43 51 44 52	NC + NO 43 51 44 52	NC + NO 43 51 44 52
References of switches without actuating key *(5)* **(⊖ NC contact with positive opening operation)** **Types of main contacts actuated by the key** **Contact states represented with actuating key inserted** **With 2 cable entries tapped ISO M20 x 1.5**					
3-pole **NC + NO + NO** (2 NO break before make) slow break 21 13 33 22 14 34	**XCSE5312** ⊖	**–**	**XCSE5322** ⊖	**XCSE5332** ⊖	**XCSE5342** ⊖
3-pole **NC + NC + NO** (NO break before make) slow break 21 31 13 22 32 14	**XCSE7312** ⊖	**XCSE73127** ⊖	–	**XCSE7332** ⊖	**XCSE7342** ⊖
3-pole **NC + NC + NC** slow break 11 21 31 12 22 32	**XCSE8312** ⊖ *(4)*	**XCSE83127** ⊖ *(4)*	–	–	–
Weight (kg)	1.140	1.140	1.140	1.140	1.140

References of switches with locking on energization and unlocking on de-energization

To order a safety interlock switch with locking on energization and unlocking on de-energization of the solenoid, replace the second number **(3)** with **5** in the references shown above. Example: XCSE5312 becomes **XCSE5512**. For these models, the auxiliary contacts states are also represented with key inserted and solenoid not energized. 2 NC auxiliary contact models cannot be ordered with locking on energization.
Some references with locking on energization may not be available.

References of switches with locking on de-energization and unlocking on energization with emergency release by mushroom head pushbutton

To order a switch with locking on de-energization and with emergency release pushbutton replace the second number **(3)** with **4** in the references shown above.
Example: XCSE7312 becomes **XCSE7412**.
Some references with trigger action mushroom head pushbutton may not be available.

References of switches with 2 cable entries tapped Pg 13.5 or 1/2" NPT

To order a switch with 2 cable entries for Pg 13.5 cable gland:
- replace the last number **(2)** with **1** in the selected reference. Example: XCSE5312 becomes **XCSE5311**.
- for switches with 7 at the end of the reference, replace the **2** before the 7 with **1** in the selected reference. Example: XCSE73127 becomes **XCSE73117.**

To order a switch with 2 cable entries for 1/2" NPT conduit:
- replace the last number **(2)** with **3** in the selected reference. Example: XCSE5312 becomes **XCSE5313**.
- for switches with 7 at the end of the reference, replace the **2** before the 7 with **3** in the selected reference. Example: XCSE73127 becomes **XCSE73137.**

Some Pg 13 and 1/2" NPT references may not be available.

References of actuating keys

See page 71

(1) Head adjustable in 90° steps through 360°. Blanking plug for operating head slot included with switch.
(2) A key-operated lock (2 keys included with switch) enables forced opening of the interlocking mechanism, by authorized personnel, allowing withdrawal of the actuating key and subsequent opening of the NC safety contacts (auxiliary release).
(3) For use on 110/120 V c or 220/240 V c, remove the LED indicator module.
(4) Switches supplied with a single green LED.
(5) Actuating keys to be ordered separately (see page 71).

Other versions: please consult our Customer Care Center.

Dimensions:
page 72

Schemes:
page 73

YAGEO 1133 Sensors

Safety detection solutions

Safety interlock switches

Key-operated with solenoid, turret head
XCSE metal, 2 cable entries

Solenoid characteristics						
Load factor		100%				
Rated operational voltage		a or c **24 V**	a or c **24 V**	a or c **48 V**	a or c **110/120 V**	a or c **220/240 V**
Voltage limits	Conforming to EN/IEC 60947-1	- 15%, + 10% of the rated operational voltage (including ripple on c)				
Service life		20,000 hours				
Consumption		Inrush: 10 VA. Sealed: 10 VA				

LED indicator characteristics		
Rated insulation voltage	50 V conforming to EN/IEC 60947-1	250 V conforming to EN/IEC 60947-1
Current consumption	7 mA	7 mA
Rated operational voltage	a **or 24/48 V** c	**110/240 V** a
Voltage limits	a or 20...52 V c (including ripple)	95...264 V a (including ripple)
Service life	100,000 hours	100,000 hours
Protection against overvoltages	Yes	Yes

Separate components

PF090313

XCSZ90

Description	For use with	Key withdrawal positions from lock	Unit reference	Weight (kg)
Blanking plugs for operating head slot (Sold in lots of 10)	XCSE	–	**XCSZ27**	0.050
Keys for forced opening of interlocking device (Sold in lots of 10)	XCSE	–	**XCSZ25**	0.100
Padlocking device to help prevent insertion of actuating key, for up to 3 padlocks (padlocks not included)	XCSE	–	**XCSZ90**	0.055

PF538550_A

DE9RA2012

Description	For use with	Unit reference	Weight (kg)
1/2" NPT conduit female, M20 male adapter (Sold in lots of 5)	XCSE	**DE9RA2012**	0.048
M20 x 1.5 female, Pg 13.5 male adapter (Sold in lots of 5)	XCSE	**DE9RP13520**	0.032

References of actuating keys

Description	Straight actuating key	Actuating key with wide fixing	Pivoting actuating key	Latch for sliding doors
For XCSE key-operated switches	**XCSZ01**	**XCSZ02**	**XCSZ03**	**XCSZ05**
Weight (kg)	0.020	0.020	0.095	0.600

Dimensions

Safety interlock switches

XCSEpppp

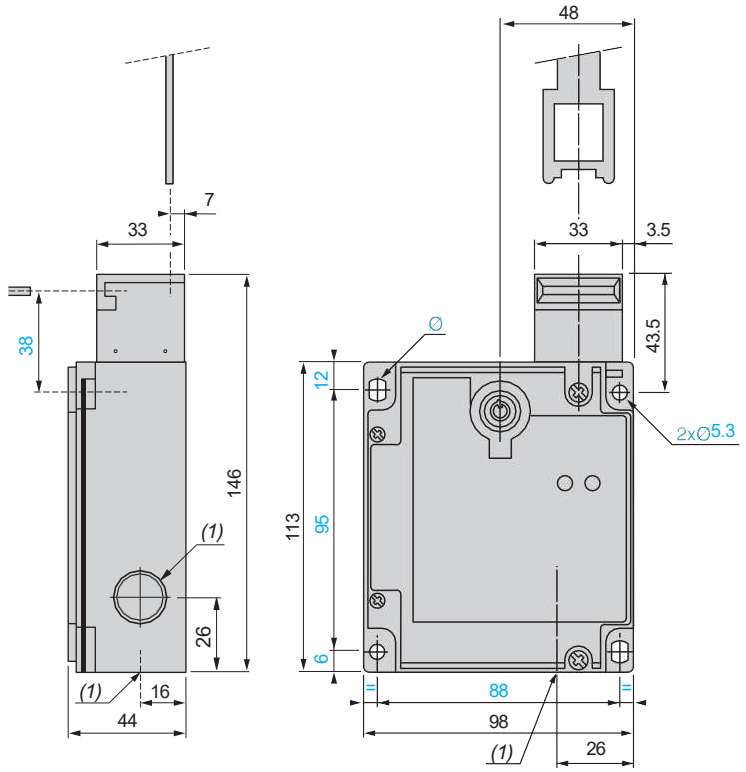

(1) 1 tapped entry for cable gland.
Ø: 2 elongated holes Ø 5.3 x 7.3

M20 x 1.5 adapter

DE9RP13520

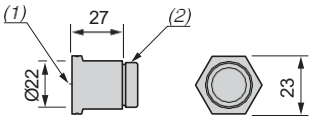

(1) M20 x 1.5 tapped entry
(2) Pg 13.5 threaded shank

1/2" NPT conduit adapter

DE9RA2012

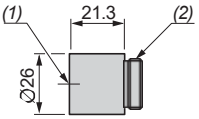

(1) Tapped entry for 1/2" NPT conduit
(2) M20 x 1.5 threaded shank

References:
page 70

Safety detection solutions

Key-operated switches

XCSA, XCSB and XCSC metal, turret head
1 cable entry

Actuating keys

XCSZ01

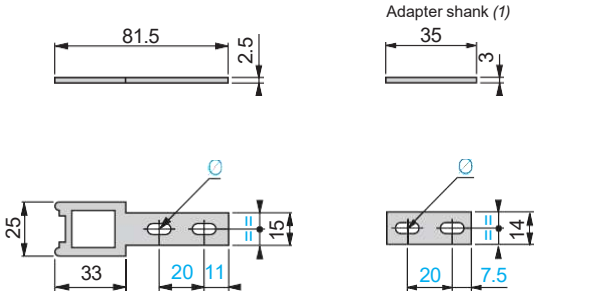

(1) Adapter (included with XCSZ01 actuating key) for replacing, without drilling an additional fixing hole, an XCKJ guard switch with ZCKY07 actuating key by an XCSA, XCSB or XCSC guard switch with XCSZ01 actuating key.

Ø: 2 elongated holes Ø 5.3 x 10

XCSZ02

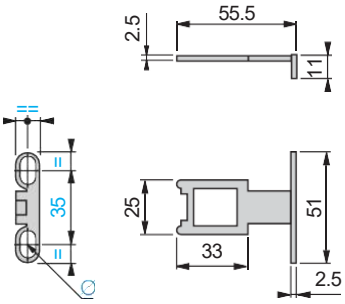

Ø: 2 elongated holes Ø 5.3 x 10

XCSZ03

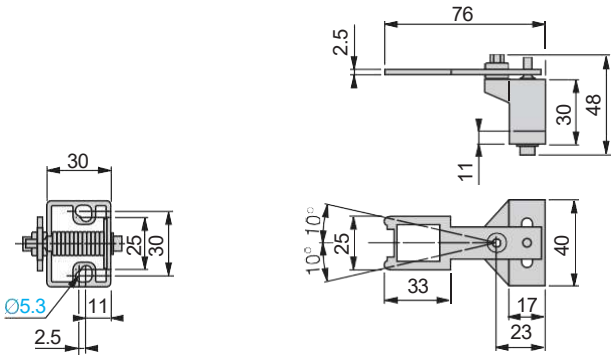

Fixing axis % related to actuating key.

XCSZ05

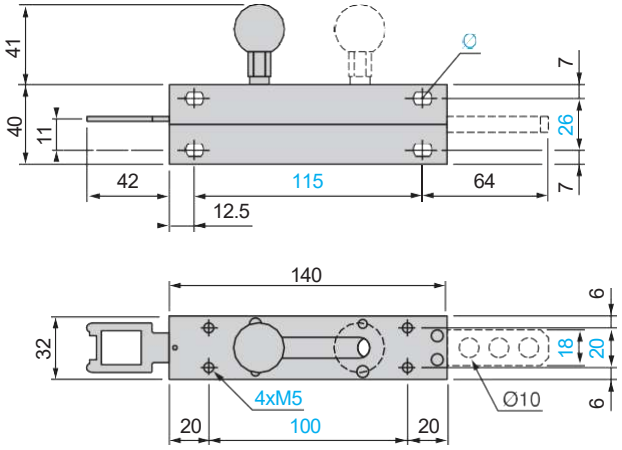

Ø: 4 elongated holes Ø 5.3 x 7.3

Operating radius required for actuating key

XCSZ01

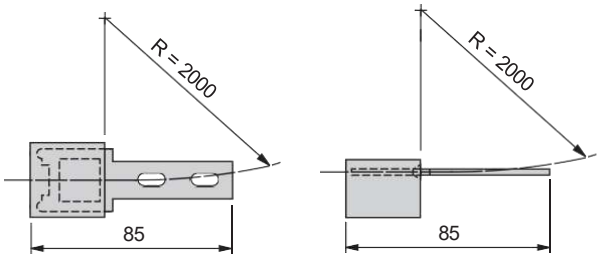

XCSZ02

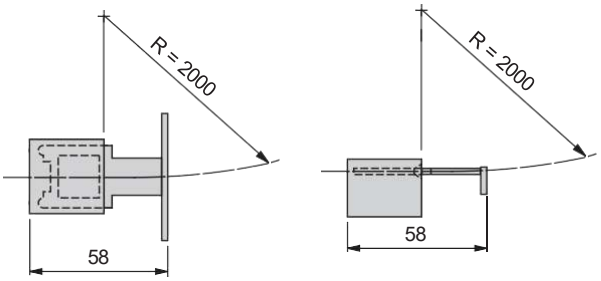

XCSZ03

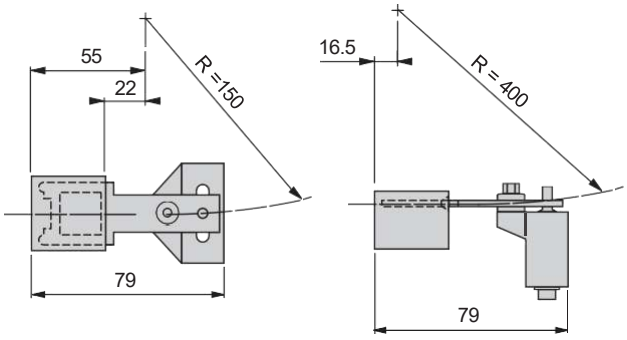

R = minimum radius

References:
page 48

Schemes:
page 51

Safety detection solutions

Safety interlock switches

Key-operated with solenoid, turret head
XCSE metal, 2 cable entries

Setting-up

Functional diagrams

XCSp5ppp

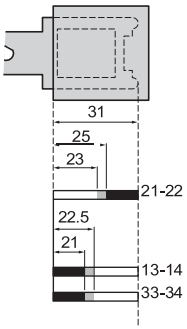

XCSp7ppp

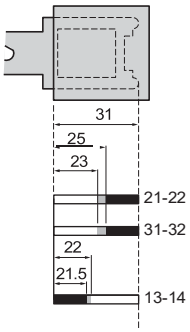

XCSp8ppp

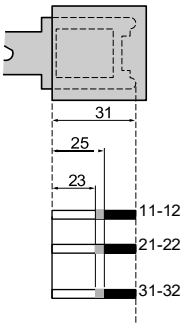

Contact operation

- Closed
- Open
- Transient state

Schemes

Contact states are represented with the actuating key inserted and the solenoid not energized.

Note: These schemes are given as examples only, the designer should refer to the relevant safety standards for guidance.

Wiring to PL=b, category 1 conforming to EN/ISO 13849-1

Example with 3-pole NC + NO + NO contact and protection fuse to help prevent shunting of the NC contact, due to either cable damage or tampering.

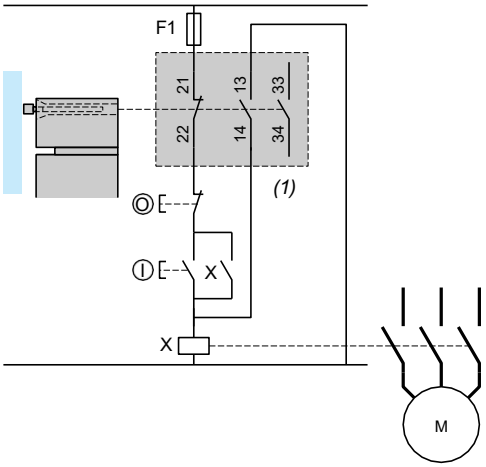

(1) Signaling contact

Wiring to PL=d, category 3 conforming to EN/ISO 13849-1

Example with 3-pole NC + NO + NO contact with mixed redundancy of the contacts and the associated control relays. To activate K1, it is necessary to remove and re-insert the actuating key when the supply is switched on.

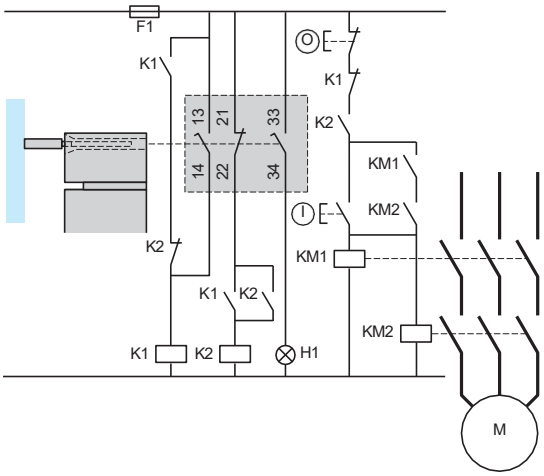

H1: “Actuating key not inserted” indicator

References:
page 70

Dimensions:
page 72

Schemes (continued)

Contact states are represented with the actuating key inserted and the solenoid not energized.

Note: These schemes are given as examples only, the designer should refer to the relevant safety standards for guidance.

Wiring to PL=b, category 1 conforming to EN/ISO 13849-1

Wiring examples with protection fuse to help prevent shunting of the NC contact, due to either cable damage or tampering.

Locking on de-energization, NC + NO + NO

XCSE53..

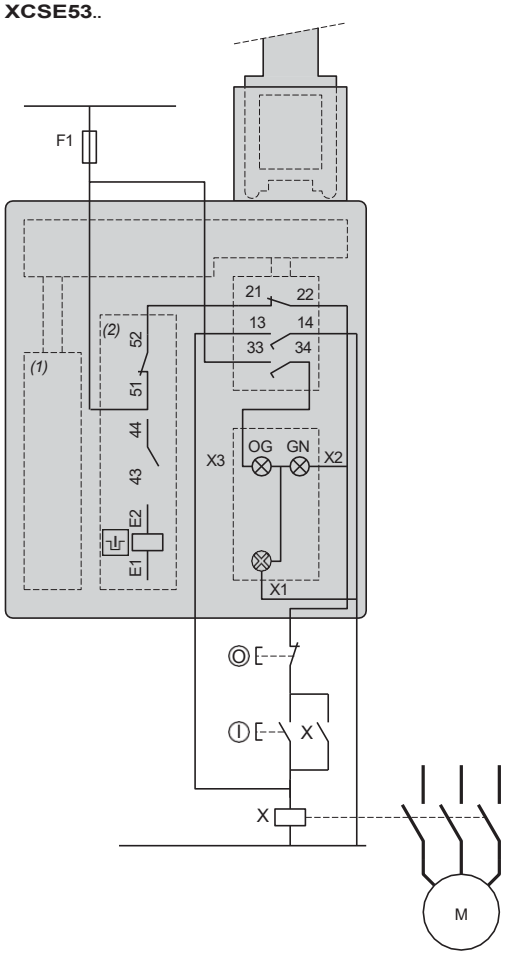

(1) Solenoid
(2) Auxiliary contact

E1-E2: Solenoid supply
43-44: Solenoid position signaling contact
51-52: Solenoid position monitoring contact
21-22: Safety contact: key position monitoring
33-34: Safety contact: key position signaling
13-14: Safety contact for detecting a possible shunt on 21-22 NC contact
33-X1: LED (orange): key withdrawn
51-X1: LED (green): key inserted and locked
21-52: Safety pre-wiring mandatory

Locking on energization, NC + NO + NO

XCSE55..

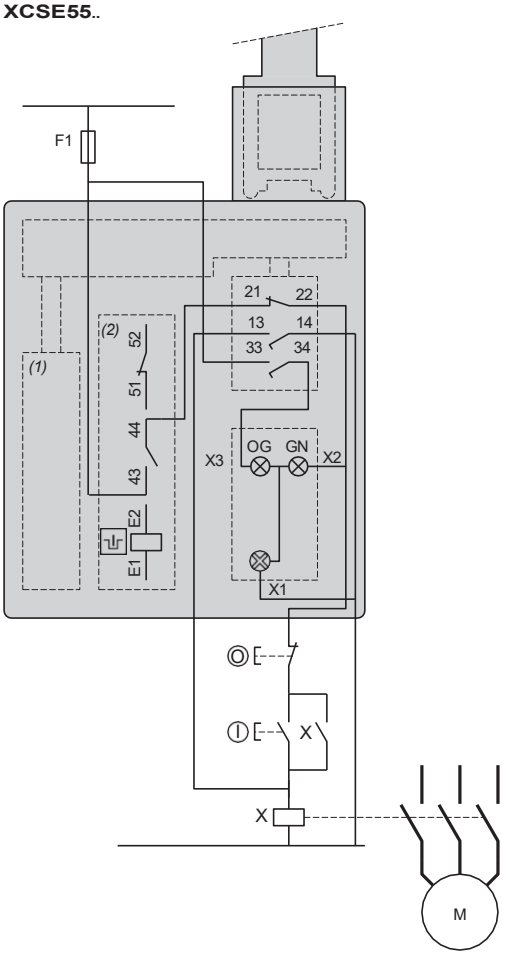

(1) Solenoid
(2) Auxiliary contact

E1-E2: Solenoid supply
43-44: Solenoid position signaling contact
51-52: Solenoid position monitoring contact
21-22: Safety contact: key position monitoring
33-34: Safety contact: key position signaling
13-14: Safety contact for detecting a possible shunt on 21-22 NC contact
33-X1: LED (orange): key withdrawn
43-X1: LED (green): key inserted and locked
21-44: Safety pre-wiring mandatory

References:
page 70

Dimensions:
page 71

Schemes (continued)

Contact states are represented with the actuating key inserted and the solenoid not energized.

Note: These schemes are given as examples only, the designer should refer to the relevant safety standards for guidance.

Wiring to PL=d, category 3 conforming to EN/ISO 13849-1

Wiring examples with redundancy for the safety interlock switch contacts, without monitoring or redundancy in the power circuit

Locking on de-energization, NC + NC + NO

XCSE73p.

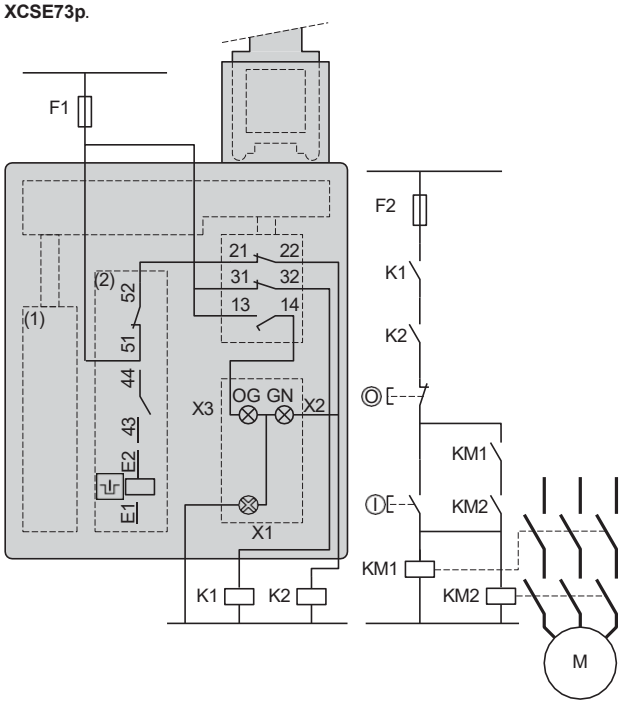

(1) Solenoid
(2) Auxiliary contact
E1-E2: Solenoid supply
21-22 and 31-32: Redundant safety contacts, key position monitoring
13-14: Safety contact, key position signaling
51-52: Solenoid position monitoring contact
43-44: Solenoid position signaling contact
13-X1: LED (orange): key withdrawn
51-X1: LED (green): key inserted and locked
21-52: Safety pre-wiring mandatory

Locking on de-energization, NC + NC + NO

XCSE73pp7

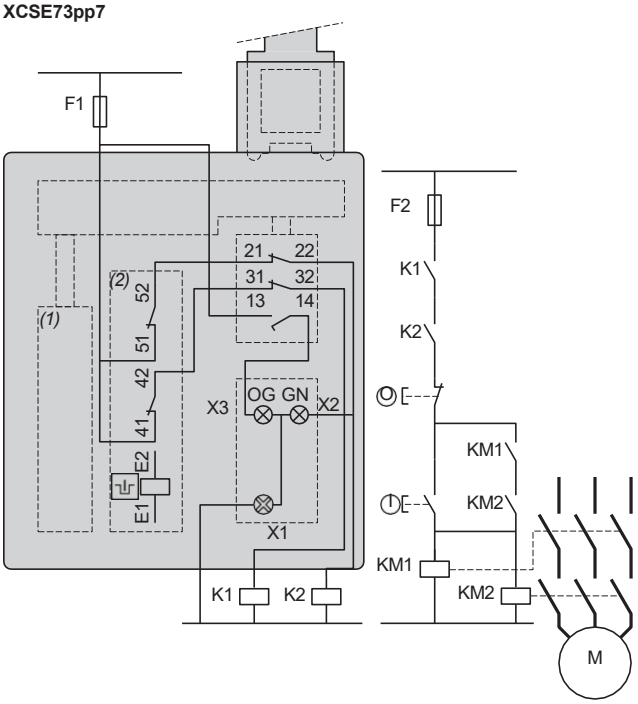

(1) Solenoid
(2) Auxiliary contact
E1-E2: Solenoid supply
21-22 and 31-32: Redundant safety contacts, key position monitoring
13-14: Safety contact, key position signaling
41-42 and 51-52: Redundant contacts, Solenoid position monitoring
13-X1: LED (orange): key withdrawn
51-X1: LED (green): key inserted and locked
21-52 and 42-31: Safety pre-wiring mandatory

References:
page 70

Dimensions:
page 71

Schemes (continued)

Contact states are represented with the actuating key inserted and the solenoid not energized.

Note: These schemes are given as examples only, the designer should refer to the relevant safety standards for guidance.

Wiring to PL=d, category 3 conforming to EN/ISO 13849-1
Wiring examples with redundancy for the safety interlock switch contacts, without monitoring or redundancy in the power circuit

Locking on energization, NC + NC + NO

XCSE75p.

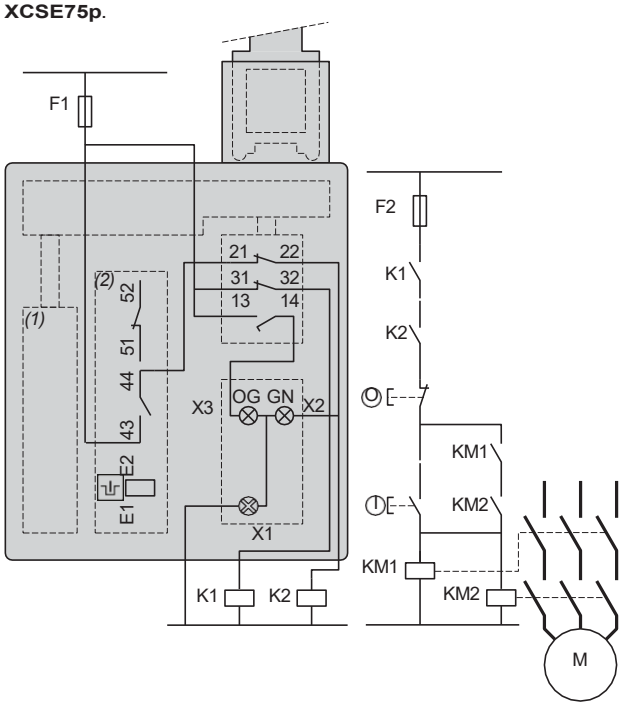

Wiring to PL=e, category 4 conforming to EN/ISO 13849-1 and SIL 3 conforming to EN/IEC 61508. Wiring method used in conjunction with a control unit (The safety interlock switch should be used in conjunction with a safety limit switch to give electrical/ mechanical redundancy).

Method for machines with long rundown time (high inertia)

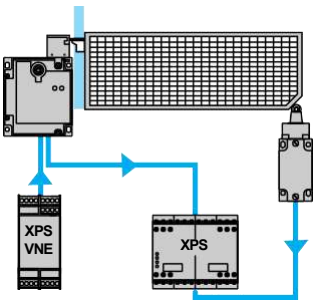

Interlocking device for actuating key fitted on guard and zero speed detection.

(1) Solenoid
(2) Auxiliary contact
E1-E2: Solenoid supply
21-22 and 31-32: Redundant safety contacts, key position monitoring
13-14: Safety contact, key position signaling
43-44: Solenoid position monitoring contact
51-52: Solenoid position signaling contact
13-X1: LED (orange): key withdrawn
43-X1: LED (green): key inserted and locked
21-44: Safety pre-wiring mandatory

References:
page 70

Dimensions:
page 71

Safety detection solutions

Safety interlock switches

Key-operated with solenoid, turret head *(1)*
XCSTE plastic, 1 cable entry

Type of switch	Locking on de-energization and unlocking on energization of solenoid *(2)*		
	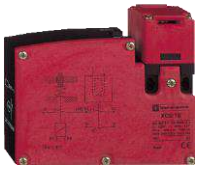		
Types of auxiliary contact actuated by the solenoid (locking contact). Contact state NC is to be considered with actuating key inserted and solenoid not energized.	24 V c or a (50/60 Hz on a) 31 (32)	120 V c or a (50/60 Hz on a) 31 (32)	230 Vc or a (50/60 Hz on a) 31 (32)
References of switches without actuating key *(3)* **(⊖ NC contact with positive opening operation) with 1 cable entry tapped ISO M16 x 1.5**			
2-pole NC + NC break before make, slow break 13 21 14 22	**XCSTE5312** ⊖	**XCSTE5332** ⊖	**XCSTE5342** ⊖
2-pole NO + NC make before break, slow break 21 13 22 14	**XCSTE6312** ⊖	–	–
2-pole NC + NC slow break 11 21 12 22	**XCSTE7312** ⊖	–	**XCSTE7342** ⊖
Weight (kg)	0.360	0.360	0.360

References of switches with locking on energization and unlocking on de-energization

To order a Safety interlock switch with locking on energization and unlocking on de-energization of the solenoid, replace the second number **(3)** with **5**.
Example: XCSTE5312 becomes **XCSTE5512**. For these models, the auxiliary contact state is to be considered with key inserted and solenoid not energized and the contact terminals are identified 33 - (34) 33 (34), Some references with locking on energization may not be available.

References of switches with 1 cable entry tapped Pg 11 or 1/2" NPT

To order a switch with 1 cable entry for Pg 11 cable gland, replace the last number **(2)** with **1** in the selected reference.
Example: XCSTE5312 becomes **XCSTE5311**.
To order a switch with 1 cable entry for 1/2" NPT conduit, replace the last number **(2)** with **3** in the selected reference.
Example: XCSTE5312 becomes **XCSTE5313**. The Pg 11 tapped entry is fitted with metal adapter DE9RA1012 for 1/2" NPT conduit.
Some Pg 13 and 1/2" NPT references may not be available.

Solenoid characteristics

Load factor	100%		
Rated operational voltage	24 V c or a (50/60 Hz on a)	120 V c or a (50/60 H on a)	230 V c or a (50/60 Hz on a)
Voltage limits	- 15%, +10% of the rated operational voltage (including ripple on c) conforming to EN/IEC 60947-1		
Service life	20,000 hours		
Consumption	10 VA max.		

(1) Head adjustable in 90° steps through 360°. Blanking plug for operating head slot included with switch.
(2) A special tool included with the safety interlock switch enables forced opening of the interlocking mechanism by authorized personnel, allowing withdrawal of the actuating key and subsequent opening of the NC safety contacts (auxiliary release).
(3) Actuating keys to be ordered separately (see page 79)

Other versions: please consult our Customer Care Center.

Dimensions:
page 77

Schemes:
page 78

YAGEO 1141 Tec-mecanique Sensors

Safety detection solutions

Safety interlock switches

Key-operated with solenoid, turret head *(1)*
XCSTE plastic, 1 cable entry

References of actuating keys and guard retaining device

Description	Straight key	Key with wide fixing *(2)*		Pivoting key	Right-angled key
For XCSTE safety interlock switches	**XCSZ11**	**XCSZ12**	**XCSZ15**	**XCSZ13**	**XCSZ14**
Weight (kg)	0.015	0.015	0.012	0.085	0.025

References of accessories

103047

XCSZ91

PIC00008910

XCSZ200

PF539550_A

DE9RA1012

Description	For use with	Unit reference	Weight (kg)
Blanking plugs for operating head slot (Sold in lots of 10)	XCSTE	**XCSZ28**	0.050
Tool for forced opening of interlocking device (Sold in lots of 10)	XCSTE	**XCSZ100**	0.050
Padlocking device to help prevent insertion of key, for up to 3 padlocks (padlocks not included)	XCSTE	**XCSZ91**	0.053
Key centering device *(3)* (Fixing screws included)	XCSTE	**XCSZ200**	0.022
1/2" NPT conduit adapter (Sold in lots of 10)	XCSTE	**DE9RA1012**	0.048
M16 x 1.5 adapter (Sold in lots of 10)	XCSTE	**DE9RA1016**	0.048

(1) Head adjustable in 90° steps through 360°. Blanking plug for operating head slot included with switch.
(2) 2 key lengths, XCSZ12: L = 40 mm, XCSZ15: L = 29 mm.
(3) Not for use with XCSZ91.

Other versions: please consult our Customer Care Center.

Safety detection solutions

Safety interlock switches

Key-operated with solenoid, turret head
XCSTE plastic, 1 cable entry

Dimensions

Safety interlock switches
XCSTE....

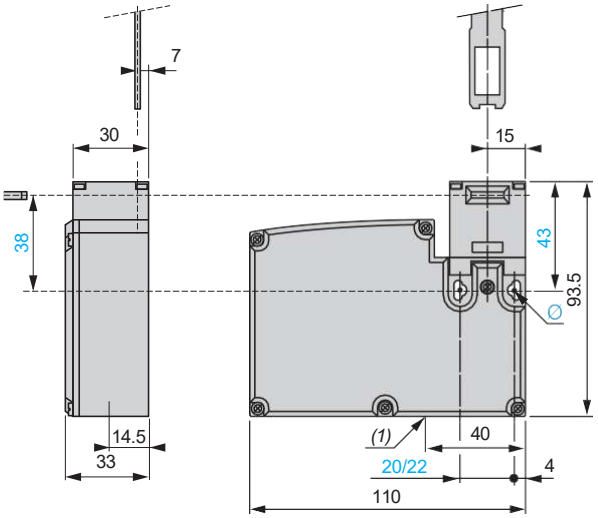

(1) 1 tapped entry for cable gland
Ø: 2 elongated holes Ø 4.3 x 8.3 on 22 centers, 2 holes Ø 4.3 on 20 centers

Actuating key centering device
XCSZ200

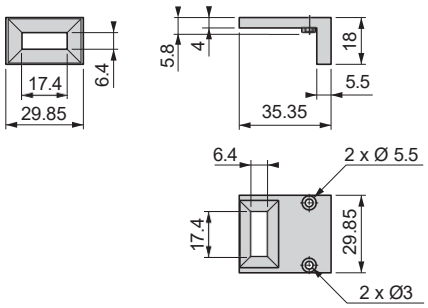

1/2" NPT conduit adapter
DE9RA1012

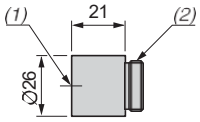

(1) Tapped entry for 1/2" NPT conduit
(2) Pg 11 threaded shank

M16 x 1.5 adapter
DE9RA1016

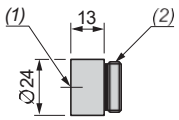

(1) M16 x 1.5 tapped entry
(2) Pg 11 threaded shank

Actuating keys
XCSZ11

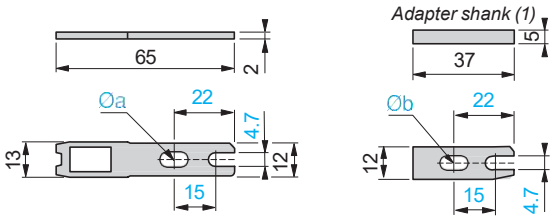

(1) Adapter (included with XCSZ11 actuating key) for replacing, without drilling an additional fixing hole, an XCKT safety interlock switch with XCKY01 actuating key by an XCSTA safety interlock switch with XCSZ11 actuating key.

Ø a: 2 elongated holes Ø 4.7 x 10
Ø b: 1 elongated hole for M4 or M4.5 screw

XCSZ12, XCSZ15

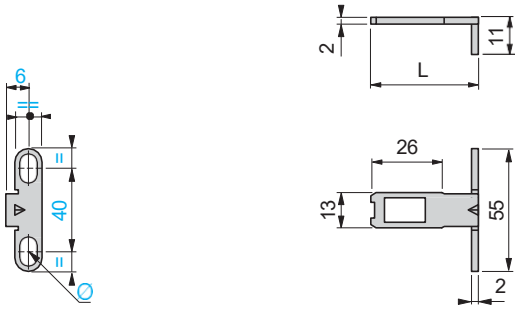

Ø: 2 elongated holes Ø 4.7 x 10
L = 40 mm (XCSZ12) or 29 mm (XCSZ15)

XCSZ13

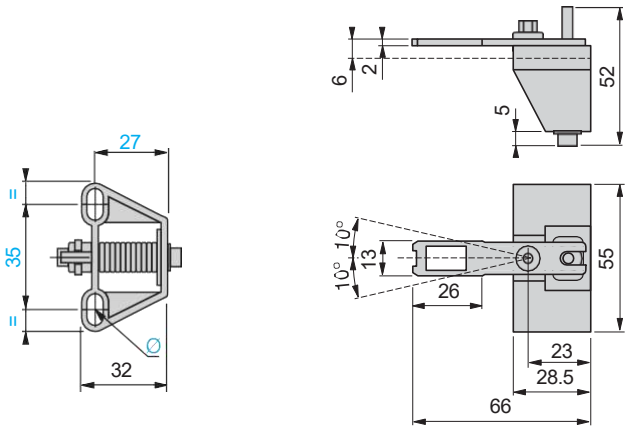

Ø: 2 elongated holes Ø 4.7 x 10

XCSZ14

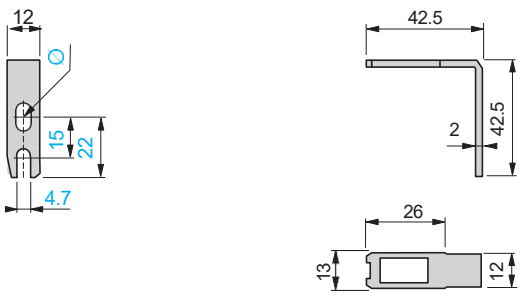

Ø: 1 elongated hole Ø 4.7 x 10

References:
page 76

Dimensions (continued)

Operating radius required for actuating key

XCSZ11

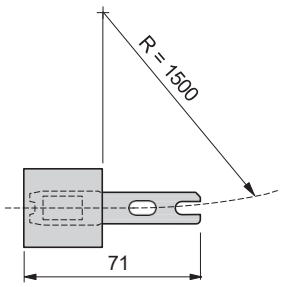

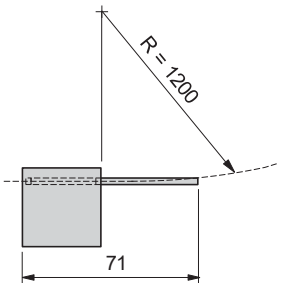

XCSZ12, XCSZ15

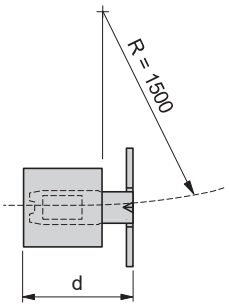

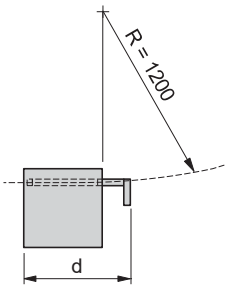

d = 46 mm (XCSZ12) or 35 mm (XCSZ15)

XCSZ13

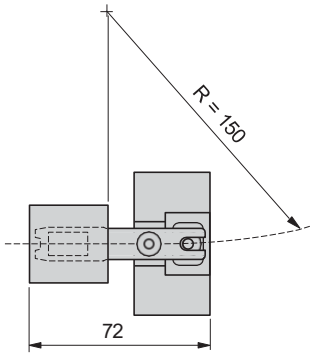

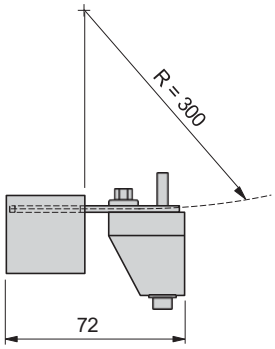

XCSZ14

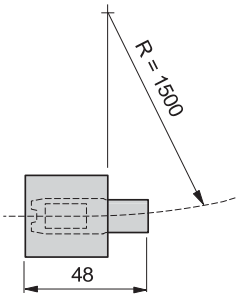

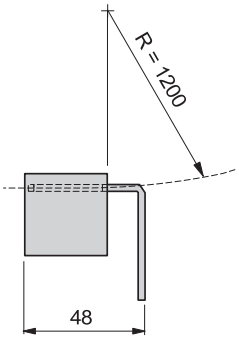

R = minimum radius

Setting-up

Functional diagrams

XCSTE5ppp

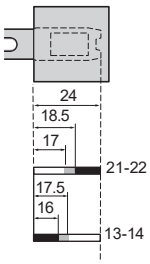

XCSTE6ppp

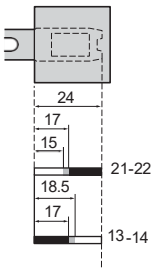

XCSTE7ppp

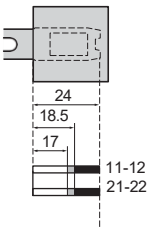

Contact operation

Closed Open Transient state

Safety detection solutions

Safety interlock switches

Key-operated with solenoid, turret head
XCSTE plastic, 1 cable entry

Schemes (continued)

Contact states are represented with the actuating key inserted and the solenoid not energized.

Note: These schemes are given as examples only, the designer should refer to the relevant safety standards for guidance.

Wiring to PL=d, category 3 conforming to EN/ISO 13849-1

Example with 2-pole NC + NO contact with mixed redundancy of the contacts and the associated control relays. To activate K1, it is necessary to remove and re-insert the actuating key when the supply is switched on.

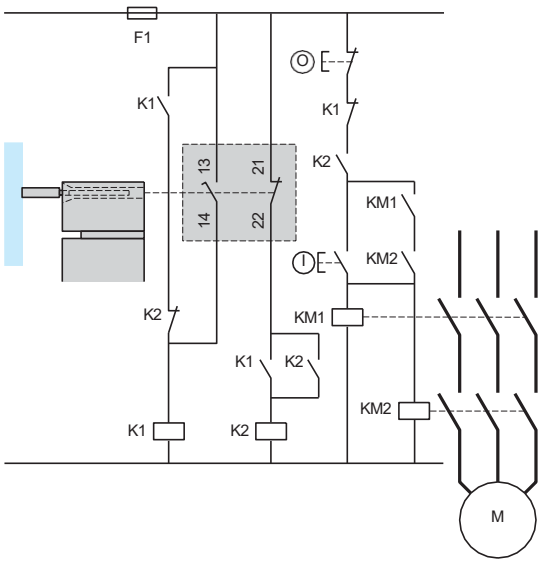

Wiring to PL=e, category 4 conforming to EN/ISO 13849-1 and SIL 3 conforming to EN/IEC 61508

(The safety interlock switch should be used in conjunction with a safety limit switch to give electrical/mechanical redundancy)

Method for machines with long rundown time (high inertia)

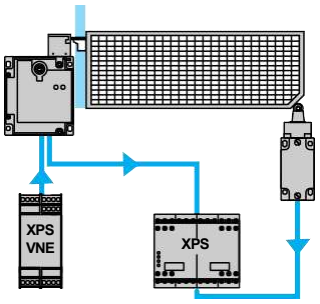

Interlocking device for actuating key fitted on guard and zero speed detection.

Wiring to PL=b, category 1 conforming to EN/ISO 13849-1

Wiring examples with protection fuse to help prevent shunting of the NC contact, due to either cable damage or tampering.

Locking on de-energization

NC + NO
XCSTE53..

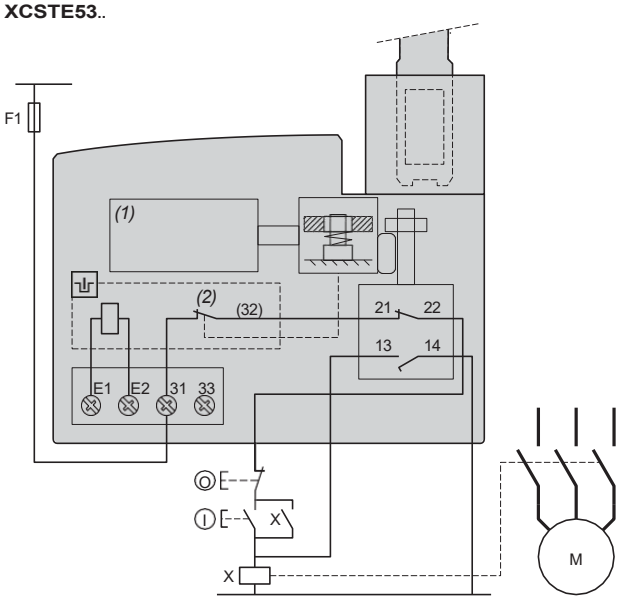

(1) Solenoid
(2) Auxiliary contact
E1-E2: Solenoid supply
13-14: Safety contact for detecting a possible shunt on 21-22 NC contact

Locking on energization

NC + NO
XCSTE55pp

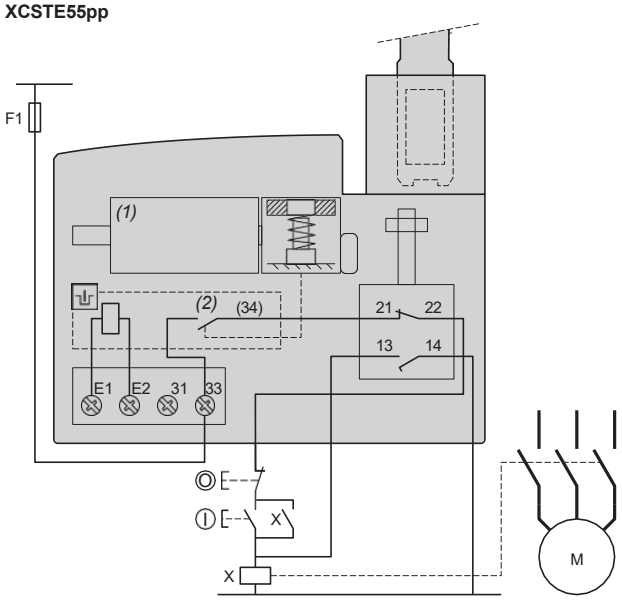

(1) Solenoid
(2) Auxiliary contact
E1-E2: Solenoid supply
13-14: Safety contact for detecting a possible shunt on 21-22 NC contact

Safety detection solutions

Safety interlock switches

Key-operated with solenoid, turret head
XCSTE plastic, 1 cable entry

Schemes (continued)

Contact states are represented with the actuating key inserted and the solenoid not energized.

Note: These schemes are given as examples only, the designer should refer to the relevant safety standards for guidance.

Wiring to PL=d, category 3 conforming to EN/ISO 13849-1

Wiring examples with redundancy for the safety interlock switch contacts, without monitoring or redundancy in the power circuit

Locking on de-energization

NC + NC
XCSTE73..

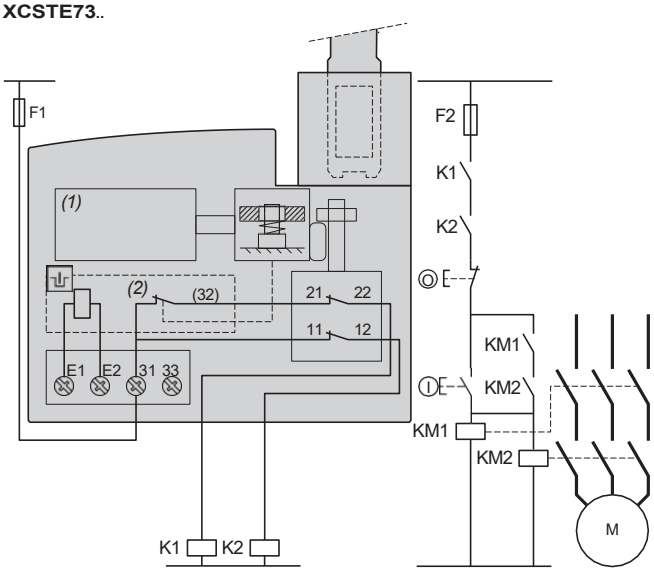

(1) Solenoid
(2) Solenoid auxiliary contact
E1-E2: Solenoid supply
21-22 and 11-12: Redundant Safety contacts: key position monitoring

Locking on energization

NC + NC
XCSTE75..

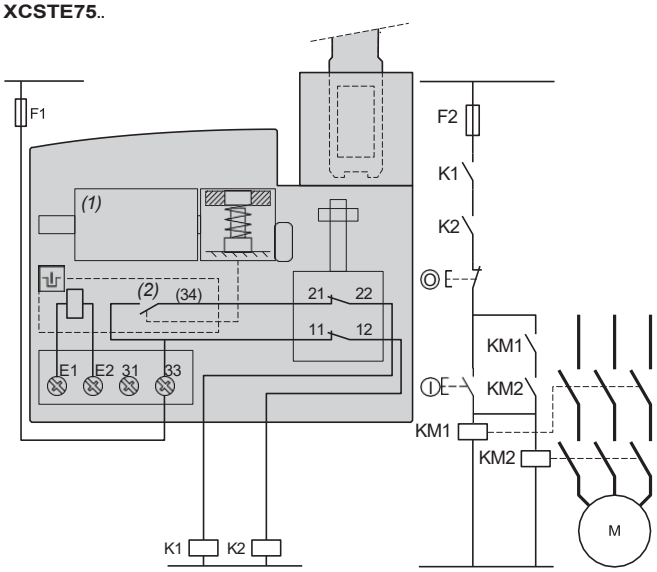

(1) Solenoid
(2) Solenoid auxiliary contact
E1-E2: Solenoid supply
21-22 and 11-12: Redundant Safety contacts: key position monitoring

Safety detection solutions

Contactless RFID safety switches

XCSR standalone, daisy-chain and single models
Unique code (high level coding)

ECOLAB
Certified

Standalone models

- Unique code, high-level coding conforming to EN/ISO 14119
- 2 OSSD safety outputs
- Embedded EDM (external device monitoring)
- Manual or automatic start/restart depending on model
- Male 8-pin M12 connector
- IP 69K
- Numerous possible mounting configurations due to rotary transponder and symmetrical design
- Operation possible without safety control unit

Category 4/PL = e and SIL3

XCSRC11AM12 and XCSRC11MM12 Unique pairing *(1)*	**XCSRC31AM12 and XCSRC31MM12** Two new pairings possible *(2)*

Page 86

Daisy-chain models for series connection

- Unique code, high-level coding conforming to EN/ISO 14119
- Up to 20 switches can be connected in series without impacting the safety level
- 2 OSSD safety outputs
- 2 male 5-pin M12 connectors for direct series connection
- IP 69K
- Diagnosis of the whole chain of switches possible using the optional diagnostic module (see page 89)
- Numerous possible mounting configurations due to rotary transponder and symmetrical design

Category 4/PL = e and SIL3 (if combined with an appropriate safety control unit category 4/PL = e - SIL3)

XCSRC12M12 Unique pairing *(1)*	**XCSRC32M12** Two new pairings possible *(2)*

Page 87

Single models for point-to-point connections

- Unique code, high-level coding conforming to EN/ISO 14119
- Point-to-point connection to a safety controller or safety PLC
- 2 OSSD safety outputs
- Male 5-pin M12 connector
- IP 69K
- Numerous possible mounting configurations due to rotary transponder and symmetrical design

Category 4/PL = e and SIL3 (if combined with an appropriate safety control unit category 4/PL = e - SIL3)

XCSRC10M12 Unique pairing *(1)*	**XCSRC30M12** Two new pairings possible *(2)*

Page 88

(1) The reader and transponder are supplied together, already factory-paired with a unique code.

(2) For these switches, the reader and transponder are supplied together, already factory-paired with a unique code. However, the reader can be re-paired (twice only) with a new (blank) transponder (see page 89). Once the new transponder has been paired, the previous transponder is no longer usable. A new blank transponder can only be paired once.

YAGEO 1147 Telemecanique Sensors

Safety detection solutions

Contactless RFID safety switches

XCSR standalone, daisy-chain and single models
Unique code (high level coding)

Type of contactless RFID switch		XCSRC.1AM12 and XCSRC.1MM12 standalone models	XCSRC12M12 and XCSRC32M12 daisy-chain models	XCSRC10M12 and XCSRC30M12 single models
Environment				
Conforming to standards		EN/ISO 14119 (High level of coding), EN/IEC 60947-5-2, EN/IEC 60947-5-3 UL 508 *(1)*, CSA C22.2 SIL 3 (IEC 61508), SILCL 3 (IEC 62061), PLe–Cat. 4 (EN ISO 13849-1)		
Product certifications		e, cULus, TÜV, FCC, EAC, IC, RCM, E2, ECOLAB		
Maximum safety level *(2)*		SIL3 conforming to EN/IEC 61508, PL=e, category 4 conforming to EN/ISO 13849-1		
Ambient air temperature	For operation	-25...+70 °C		
	For storage	-40...+85 °C		
Vibration resistance	Conforming to EN/IEC 60068-2-6	10 gn (10…150 Hz)		
Shock resistance	Conforming to EN/IEC 60068-2-27	30 gn, 11 ms		
Protection against electric shock	Conforming to EN/IEC 61140	Class III		
Degree of protection	Conforming to EN/IEC 60529	IP 65, IP 66, IP 67		
	Conforming to DIN 40050	IP 69K		
Materials		Thermoplastic housing (Valox™)		
Characteristics				
Rated operating characteristics *(3)*		Ue: 24 V c, -20%…+10%, Ie: c 60 mA (without load)		
Rated impulse withstand voltage (U imp)	Conforming to EN/IEC 60947-5-2	0.8 kV		
Integrated output protection		Short-circuit protection		
Connection	Conforming to EN/IEC 60947-5-2-A3 and EN/IEC 61076	M12 connector (A coding)		
Safety outputs **2 PNP NO OSSDs** **(output signal switching devices)**	Maximum current	400 mA	200 mA	200 mA
Maximum switching frequency		0.5 Hz		
Delay	Power-on	< 5 s		
Typical response time (on transponder entry into operating zone)		250 ms	120 ms + 50 ms per additional switch	120 ms
Risk time (on transponder exit from operating zone)		< 120 ms	< 120 ms + 18 ms per additional switch	< 120 ms
Probability of dangerous failure per hour **PFH_D**	Conforming to EN/ISO13849-1 and EN/IEC 62061	5×10^{-10}		
Tightening torque	M4 retaining screw	1.5 N.m/*13 lb-in*		
	M12 connectors	1 N.m/*0.88 lb-in*		
Mission time (TM)		20 years		
RFID protocol		Based on ISO 15693		
Functions				
Functions		- Operation possible without safety control unit - Manual monitored or automatic restart depending on model - External device monitoring (EDM)	- Integrated series connections - Connection to a safety interface (safety relay, for example) - Series diagnostics (with XCSRD210MDB diagnostic module)	- Point-to-point connection to a safety interface (safety controller or safety PLC, for example)

(1) The switch safety function has been assessed by TüV Nord, not by UL.
(2) With an appropriate, correctly connected safety control system for daisy-chain and single models.
(3) Use a safety extra-low voltage (SELV) or protected extra-low voltage (PELV) power supply.

Safety detection solutions

Contactless RFID safety switches

XCSR standalone model
Unique code (high level coding)

Type	Standalone contactless RFID safety switches
ECOLAB Certified	Connection via M12 connector

References

Composition	Functions	Unique pairing	Two new pairings possible	Weight (kg)
b Reader b Multiposition sensor transponder b Transponder and reader factory paired b 4 blanking plugs b Quick Start Guide b EU declaration of conformity	EDM, automatic restart	**XCSRC11AM12**	**XCSRC31AM12**	0.100
	EDM, monitored manual restart *(1)*	**XCSRC11MM12**	**XCSRC31MM12**	0.100

Detection characteristics *(2)*

Typical operating sensing distance (for detection of transponder presence)	15 mm
Assured operating sensing distance	Sao: 10 mm
Typical release sensing distance (for detection of transponder absence)	18 mm
Assured release distance	Sar: 35 mm
Repeat accuracy	y 10% x Sr
Hysteresis	3% x Sr y H y 20% x Sr (Sr: real sensing distance)

Output states

Output states shown are with the dedicated transponder positioned in front of the reader.

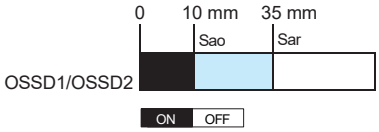

Outputs closed
Outputs open
Transient state

Sao: Assured operating sensing distance
Sar: Assured release distance
Conforming to EN/IEC 60947-5-3

Connections

8-pin M12 connector

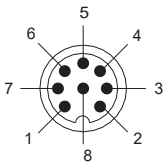

1 + 24 V c
2 OSSD2
3 0 V c
4 OSSD1
5 EDM_ST_1
6 EDM_ST_2
7 NC (not connected)
8 NC (not connected)

(1) The start command is effective after the operator has pressed and released the start button.
(2) These values are given for a face-to-face mounting configuration of the reader and transponder on a non-magnetic support, without misalignment between the transponder and the reader, and at an ambient temperature between +20 and +25 °C.

Safety detection solutions

Contactless RFID safety switches

XCSR daisy-chain model
Unique code (high level coding)

Type	Daisy-chain contactless RFID safety switches
ECOLAB Certified	Connection via M12 connectors

References

Composition	Unique pairing	Two new pairings possible	Weight (kg)
b Reader b Multiposition sensor transponder b Transponder and reader factory-paired b 4 blanking plugs b Quick Start Guide b EU declaration of conformity	**XCSRC12M12**	**XCSRC32M12**	0.100

Detection characteristics *(1)*

Typical operating sensing distance (for detection of transponder presence)	15 mm
Assured operating sensing distance	Sao: 10 mm
Typical release sensing distance (for detection of transponder absence)	18 mm
Assured release distance	Sar: 35 mm
Repeat accuracy	y 10% x Sr
Hysteresis	3% x Sr y H y 20% x Sr (Sr: real sensing distance)

Output states

Output states shown are with the dedicated transponder positioned in front of the reader.

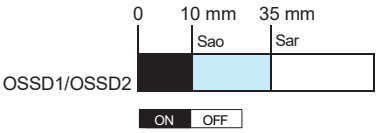

Outputs closed
Outputs open
Transient state

Sao: Assured operating sensing distance
Sar: Assured release distance
Conforming to EN/IEC 60947-5-3

Connections

2 x 5-pin M12 connectors

Output connector

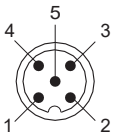

1 + 24 V c
2 OSSD2 (O2)
3 0 V c
4 OSSD1 (O1)
5 Diagnosis Out (Do)

Input connector

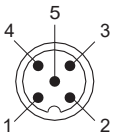

1 + 24 V c
2 INPUT 2 (I2)
3 0 V c
4 INPUT 1 (I1)
5 Diagnosis In (Di)

(1) These values are given for a face-to-face mounting configuration of the reader and transponder on a non-magnetic support, without misalignment between the transponder and the reader, and at an ambient temperature between +20 and +25 °C.

Safety detection solutions

Contactless RFID safety switches

XCSR single model
Unique code (high level coding)

Type	Single contactless RFID safety switches
ECOLAB Certified	Connection via M12 connector

References

Composition	Unique pairing	Two new pairings possible	Weight (kg)
b Reader b Multiposition sensor transponder b Transponder and reader factory-paired b 4 blanking plugs b Quick Start Guide b EU declaration of conformity	**XCSRC10M12**	**XCSRC30M12**	0.100

Detection characteristics *(1)*

Typical operating sensing distance (for detection of transponder presence)	15 mm
Assured operating sensing distance	Sao: 10 mm
Typical release sensing distance (for detection of transponder absence)	18 mm
Assured release distance	Sar: 35 mm
Repeat accuracy	y 10% x Sr
Hysteresis	3% x Sr y H y 20% x Sr (Sr: real sensing distance)

Output states

Output states shown are with the dedicated transponder positioned in front of the reader.

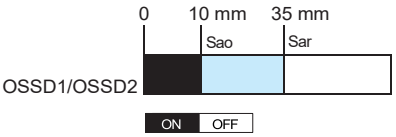

Outputs closed
Outputs open
Transient state

Sao: Assured operating sensing distance
Sar: Assured release distance
Conforming to EN/IEC 60947-5-3

Connections

5-pin M12 connector

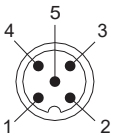

1 + 24 V c
2 OSSD2
3 0 V c
4 OSSD1
5 NC (not connected)

(1) These values are given for a face-to-face mounting configuration of the reader and transponder on a non-magnetic support, without misalignment between the transponder and the reader, and at an ambient temperature between +20 and +25 °C.

Safety detection solutions

Contactless RFID safety switches

Accessories

XCS_616_CPSCT16004

XCSRD210MDB

XCS_616_CPSCT16004

XCSRK2A3

XCS_616_CPSCT16005

XCSRZE

XCS_616_CPSCT16016

XCSRZSRC1

XCSRZSTK1

Diagnostic module for daisy-chain RFID safety switches

The **XCSRD210MDB** module interprets the diagnostic data from the whole chain of switches and makes this information available in Modbus registers.
There are two RJ45 Modbus communication connectors available for connecting external peripheral devices (such as an HMI terminal, for example).

Main characteristics of the diagnostic function:
- b It provides the state of all the **XCSRCpM12** switches monitored by the safety chain.
- b It identifies which protection devices are open or closed.
- b It helps to prevent a restart of the machine if the chain has been unintentionally or deliberately tampered with; if an error has been detected on any of the safety switches; or if any of the wiring becomes disconnected.
- b It detects if the **XCSRZE** loopback device is not connected and helps to prevent restarting until the loopback device has been reconnected and a new power cycle completed.

Description	For RFID safety switches	Reference	Weight (kg)
b Modbus RTU b 2 RJ45 outputs b 2 LEDs b 1 volt-free contact representative of the state of the chain	XCSRC12M12, XCSRC32M12	**XCSRD210MDB**	0.100

Loopback device for daisy-chain RFID safety switches

Description	For RFID safety switches	Reference	Weight (kg)
M12 connector	XCSRC12M12, XCSRC32M12	**XCSRZE**	0.020

Blank transponder for new pairing

Composition	For RFID safety switches	Reference	Weight (kg)
b Blank transponder b 2 blanking plugs	XCSRC30M12, XCSRC31AM12, XCSRC31MM12, XCSRC32M12	**XCSRK2A3**	0.020

Mounting accessories

Description	For use with	Reference	Weight (kg)
Mounting supports (supplied with 2 one-way screws, Ø 4 x 12 mm, for mounting the safety switch on the support)	Reader	**XCSRZSRC1**	0.150
	Transponder	**XCSRZSTK1**	0.050

Description	Length mm	Reference	Weight (kg)
One-way screws for mounting Ø 4 mm safety switches (pack of 10 screws)	14	**XCSZ71**	0.020
	35	**XCSZ72**	0.020

Characteristics

Cable type		XZCP29P12L.. XZCP29P12L..	XZCR1111064D..	XZCP11V12L.. XZCP11V12L..
Connection type		Screw thread (metal clamping ring)		
Number of contacts		8	5	
Degree of protection		IP 65, IP 67, and IP 69K (with clamping ring correctly tightened)		
Ambient air temperature	Operation	-25...+70 °C		
	Storage	-40…+85 °C		
Connection	Conforming to EN/IEC 60947-5-2	PUR cable, Ø 6.4 mm, wire c.s.a.: 8 x 0.34 mm²	PUR cable, Ø 5 mm, wire c.s.a.: 5 x 0.34 mm²	
Nominal current		2 A		
Insulation resistance		> 10^9 Ω		
Contact resistance		y 5 mΩ		

References

F19_ACC_CPFJR16052

XZCP29P12L..

F19_ACC_CPFJR16053

XZCP29P12L..

F19_ACC_CPFJR16056

XZCR1111064D..

F19_ACC_CPFJR16049

XZCP11V12L..

F19_ACC_CPFJR16050

XZCP11V12L..

Description	Pins	For use with	Type	Length m	Reference	Weight (kg)
Pre-wired connectors for standalone RFID safety switches						
Pre-wired connectors with female M12 connector (A coding)	8	XCSRC11AM12, XCSRC31AM12, XCSRC11MM12, XCSRC31MM12	Straight	2	**XZCP29P12L2**	0.010
				5	**XZCP29P12L5**	0.250
				10	**XZCP29P12L10**	0.500
				20	**XZCP29P12L20**	1.000
			Elbowed	2	**XZCP53P12L2**	0.010
				5	**XZCP53P12L5**	0.250
				10	**XZCP53P12L10**	0.500
				20	**XZCP53P12L20**	1.000
Jumper cables for daisy-chain RFID safety switches						
Jumper cables with 2 female M12 connectors (A coding)	5	XCSRC12M12, XCSRC32M12	Straight	0.3	**XZCR1111064D03**	0.060
				3	**XZCR1111064D3**	0.180
				5	**XZCR1111064D5**	0.300
				10	**XZCR1111064D10**	0.600
				25	**XZCR1111064D25**	1.500
Pre-wired connectors for daisy-chain and single RFID safety switches *(1)*						
Pre-wired connectors with female M12 connector (A coding)	5	XCSRC10M12, XCSRC30M12, XCSRC12M12, XCSRC32M12	Straight	2	**XZCP11V12L2**	0.010
				5	**XZCP11V12L5**	0.250
				10	**XZCP11V12L10**	0.500
				20	**XZCP11V12L20**	1.000
			Elbowed	2	**XZCP12V12L2**	0.010
				5	**XZCP12V12L5**	0.250
				10	**XZCP12V12L10**	0.500
				20	**XZCP12V12L20**	1.000

(1) For connecting the last switch in the chain (XCSRC12M12 or XCSRC32M12) to the safety control unit.

Safety switches

Reader with connection via M12 connector

XCSRCp0M12, XCSRCp1AM12 and XCSRCp1MM12

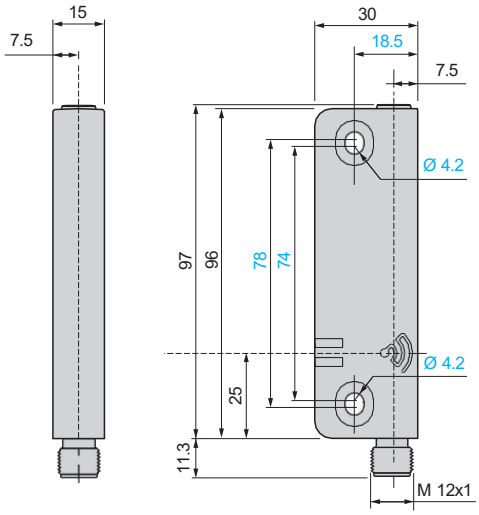

Reader with connection via 2 x M12 connectors

XCSRCp2M12

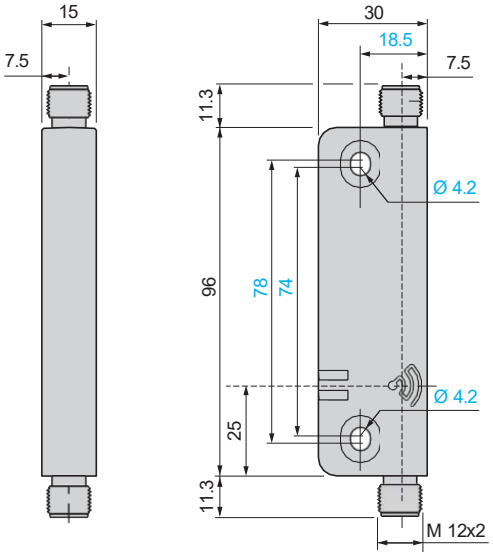

Transponder

XCSRK2A3

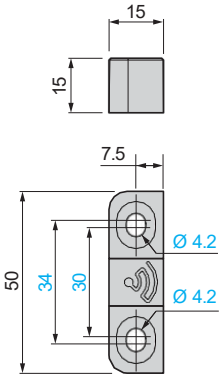

Accessories

Mounting support for reader

XCSRZSRC1

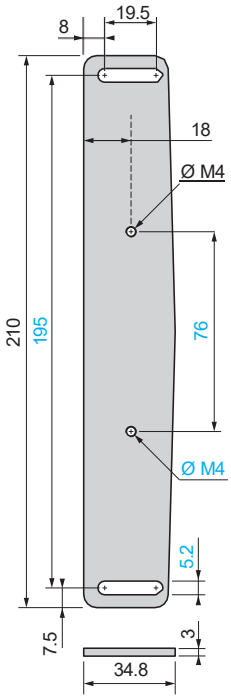

Mounting support for transponder

XCSRZSTK1

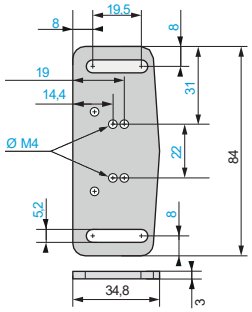

Diagnostic module

XCSRD210MDB

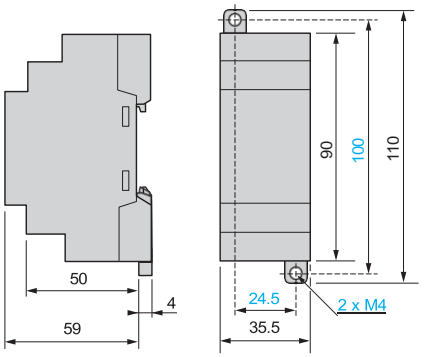

Loopback device

XCSRZE

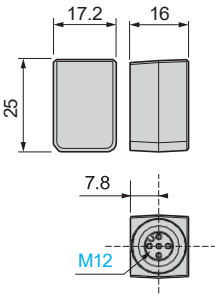

Mounting

Examples of face-to-face mounting configurations (recommended)

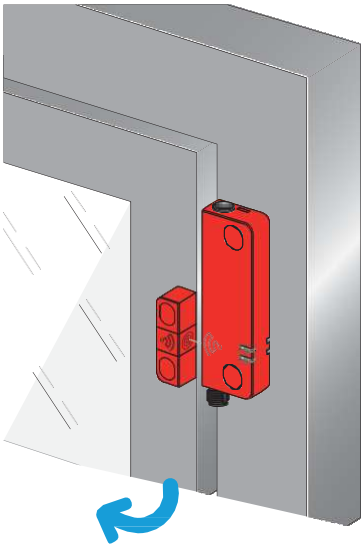

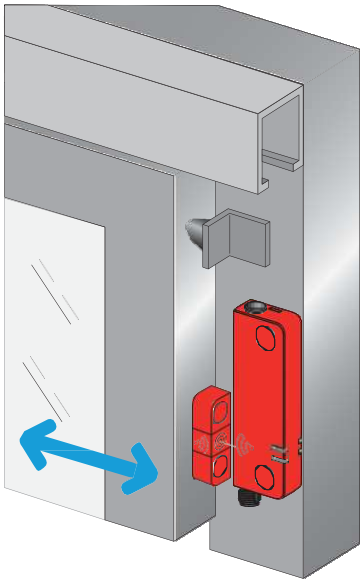

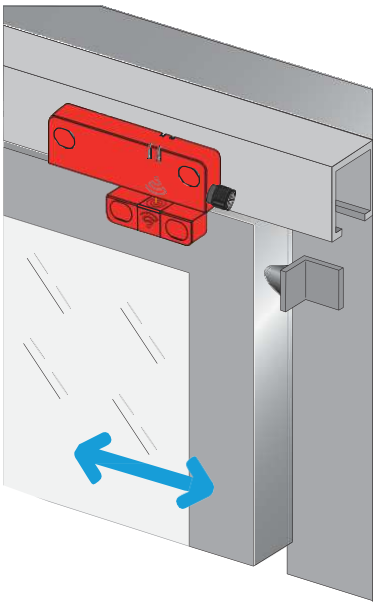

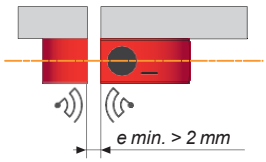

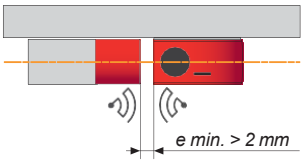

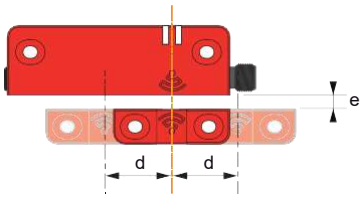

e: minimum recommended mounting distance between reader and transponder

e min. > 2 mm
d: detection limit

Example of side-by-side mounting

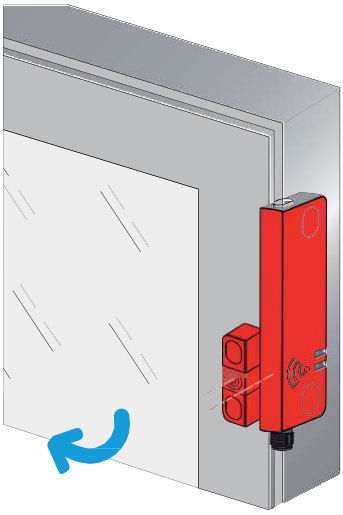

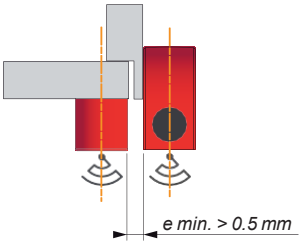

Minimum mounting distances between safety switches

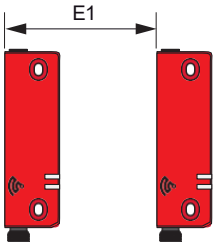

E1 min. = 120 mm

E2 min. = 160 mm

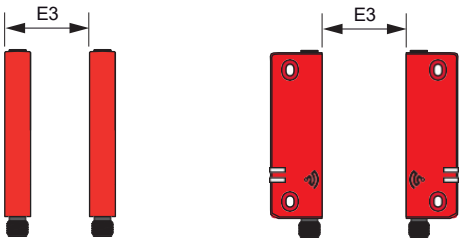

E3 min. = 120 mm

e: minimum recommended mounting distance between reader and transponder

Safety detection solutions

Contactless RFID safety switches

XCSR standalone, daisy-chain and single models

Detection curves

Face-to-face mounting (recommended configuration)

Sao and Sar sensing distances along Y axis as a function of Z
Longitudinal misalignment for X = 0

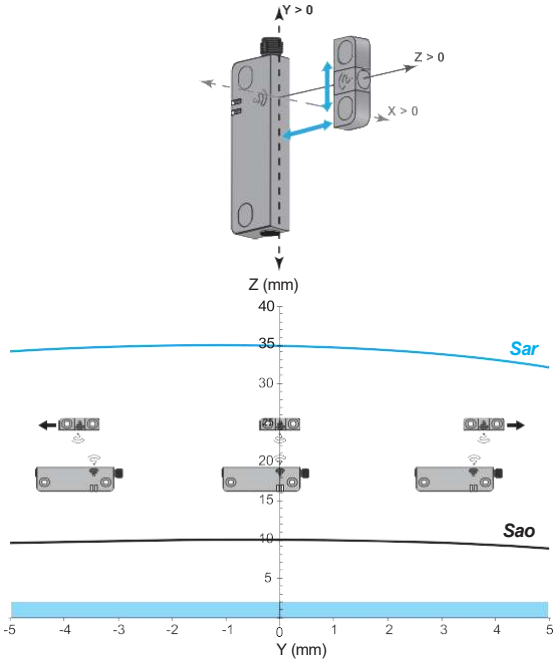

Sao and Sar sensing distances along X axis as a function of Z
Transverse misalignment for Y = 0

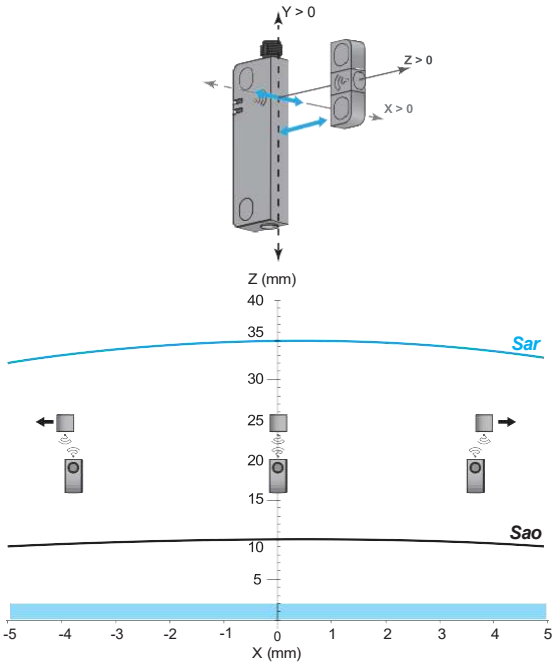

Side-by-side mounting

Sao and Sar sensing distances along Y axis as a function of X
Longitudinal misalignment for Z = 0

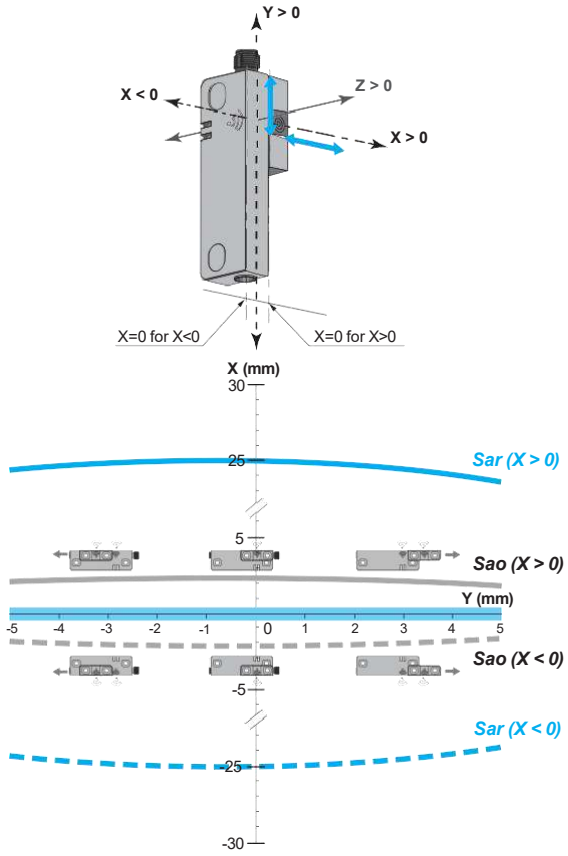

Sao and Sar sensing distances along Z axis as a function of X
Transverse misalignment for Y = 0

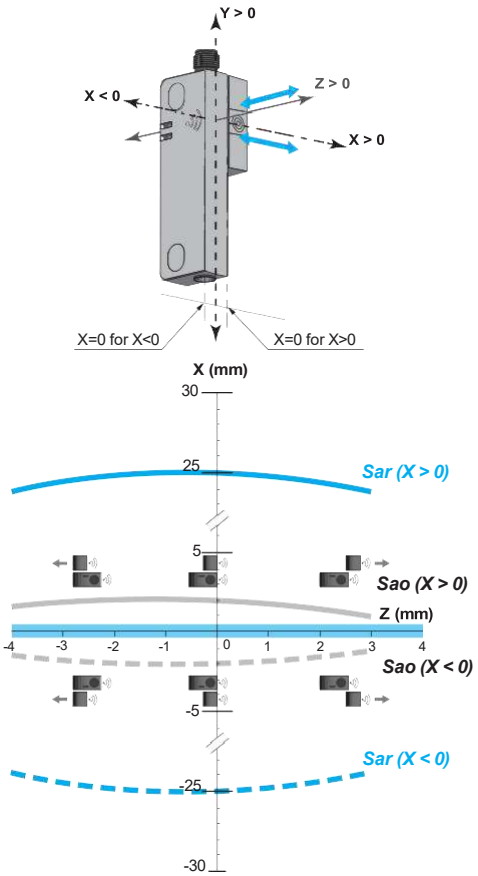

Sao: Assured operating sensing distance
Sar: Assured release distance

: *e: minimum recommended mounting distance between reader and transponder*

Schemes

Note: these schemes are given as examples only, the designer should refer to the relevant safety standards for guidance.

Standalone contactless RFID safety switches: XCSRC11AM12, XCSRC11MM12, XCSRC31AM12 and XCSRC31MM12

Example of Category 4/PL = e/SIL 3 connection, with monitored start *(1)* and monitoring loop for contactors (EDM)

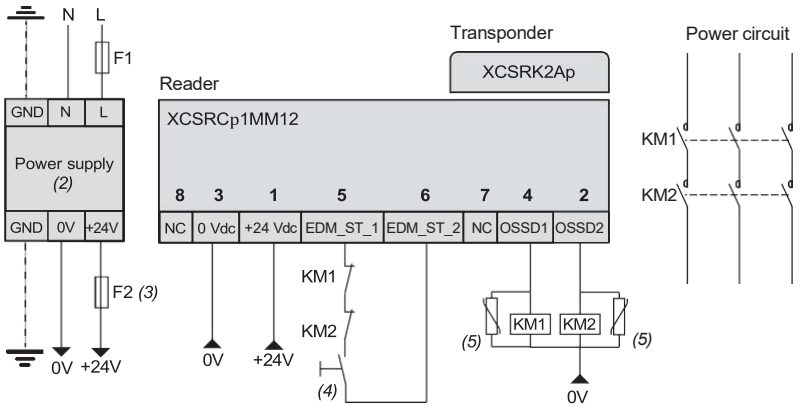

Cables: XZCP29P12Lpp or XZCP53P12L pp
1 (BN/Brown): + 24 V c
2 (WH/White): OSSD2
3 (BU/Blue): 0 V c
4 (BK/Black): OSSD1
5 (GY/Gray): EDM_ST_1
6 (PK/Pink): EDM_ST_2
7 (VT/Violet): not connected
8 (OR/Orange): not connected

(1) The restart command is effective after the operator has pressed and released the restart button. See Note (4).
(2) The power supply should meet the requirements of standard IEC 60204-1 relating to safety extra-low voltage (SELV) or protected extra-low voltage (PELV) power supplies.
(3) 1 A max.
(4) Restart button.
(5) The use of arc suppressors is recommended for KM1 and KM2.

Daisy-chain contactless RFID safety switches: XCSRC12M12 and XCSRC32M12

Example of Category 4/PL = e/SIL 3 series connection to an XPSUAFpTE

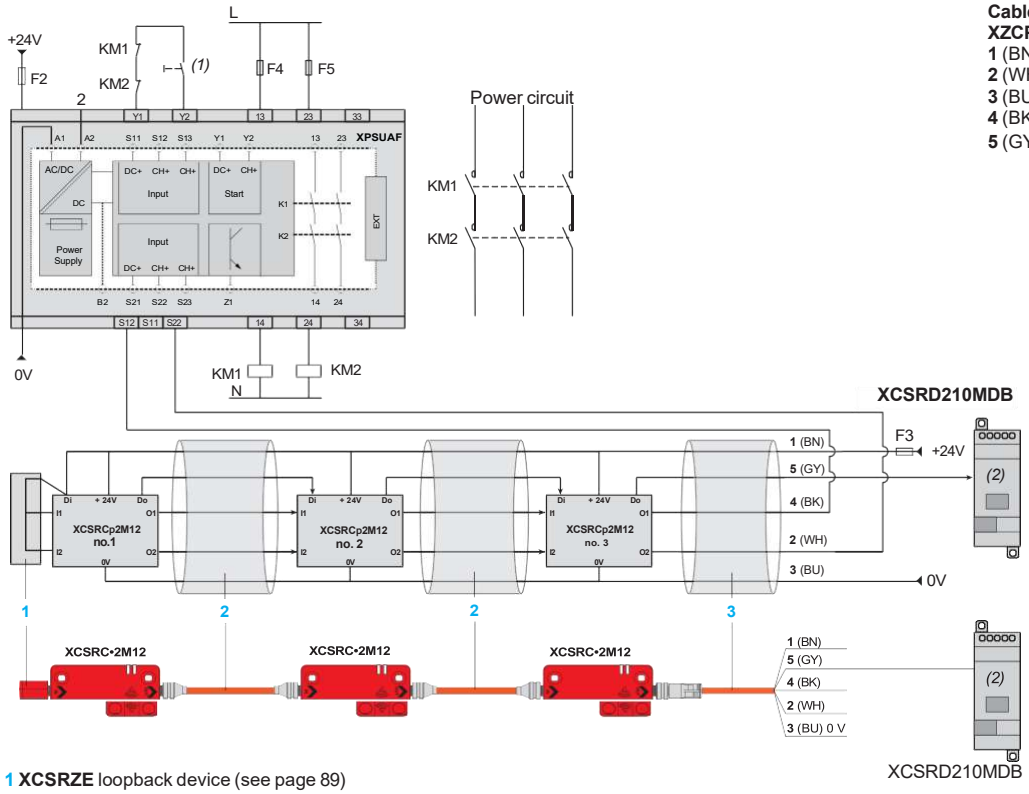

Cables: XZCP11V12Lpp or XZCP12V12Lpp
1 (BN/Brown): + 24 V c
2 (WH/White): OSSD2
3 (BU/Blue): 0 V c
4 (BK/Black): OSSD1
5 (GY/Gray): diagnostics

1 XCSRZE loopback device (see page 89)
2 XZCR1111064D.. jumper cables (see page 90)
3 XZCP11V12L.. or **XZCP12V12L**.. pre-wired connectors (see page 90)

A1, A2 Power supply
Y1 Control output (DC+) of start input
Y2 Input channel (CH+) of start input
S11, S21 Control outputs (DC+) of safety-related inputs
S12, S13, S22, S23 Input channels (CH+) of safety-related inputs

*(1) The start function is configured by means of the **XPSUAFpTE** start function selector.*
*(2) The diagnostic module (XCSRD210MDB), every **XCSRCp2M12** switch, and the **XPSUAFpTE** safety control unit should all be powered by the same power supply.*

Single contactless RFID safety switches: XCSRC10M12 and XCSRC30M12

Example of Category 4/PL = e/SIL 3 connection to an XPSMCMCP0802 safety controller

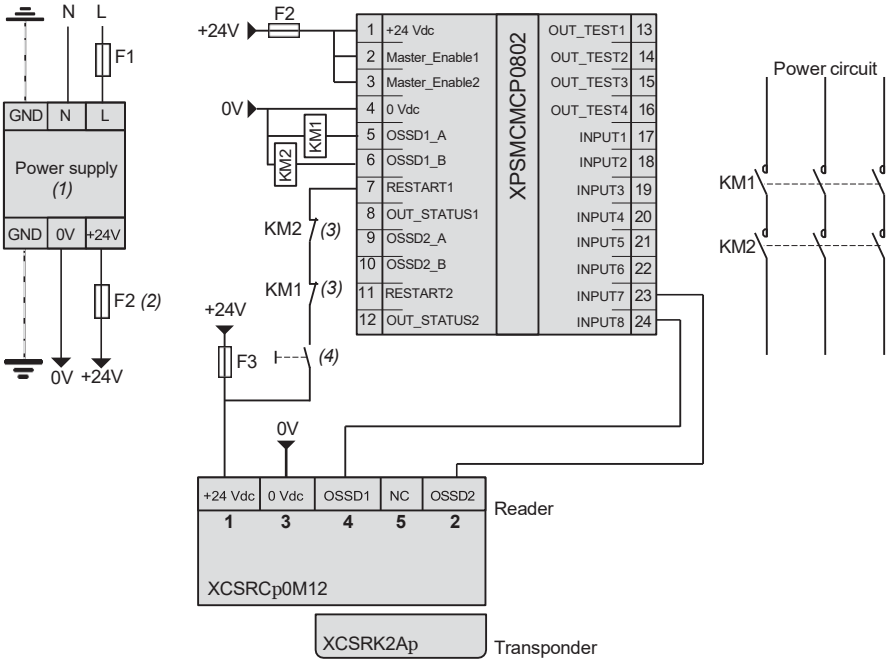

Cables: XZCP11V12Lpp or XZCP12V12L pp
1 (BN/Brown): + 24 V c
2 (WH/White): OSSD2
3 (BU/Blue): 0 V c
4 (BK/Black): OSSD1
5 (GY/Gray): not connected

(1) The power supply should meet the requirements of standard IEC 60204-1 relating to safety extra-low voltage (SELV) or protected extra-low voltage (PELV) power supplies.
(2) 1 A max.
(3) Monitoring of contactors (EDM: external device monitoring).
(4) Restart button.

Safety detection solutions

Contactless RFID safety switches

XCSRM miniature format

Single model (5-pin) and advanced model (8-pin)

ECOLAB Certified

Single model: standalone, high level coding

- b Pre-cabled, pigtail, or connector
- b Unique code, high-level coding conforming to EN/ISO 14119
- b Automatic pairing process for the 2 additional devices
- b 2 OSSD safety outputs (PNP)
- b Point-to-point connection to a safety control unit
- b Automatic start/restart without EDM

Category 4/PL = e, SIL3, SILCL3

XCSRM10Lpp, XCSRM10ppM12	**XCSRM30Lpp, XCSRM30ppM12**
Unique pairing *(1)*	Two new pairings possible *(2)*

The switches are available with pre-cabled, M12 connector, and pigtail connection format.

Page 98

Single model: standalone, generic coding

- b Pre-cabled, pigtail, or connector
- b Low-level coding
- b For point-to-point connections
- b 2 OSSD safety outputs (PNP)
- b Can dialog directly to switch without pairing

Category 4/PL = e, SIL3, SILCL3

XCSRML0Lppp, XCSRML0M12, XCSRML0L01M12,
Generic coded

The switches are available with pre-cabled, M12 connector, and pigtail connection format.

Page 98

Advanced model: daisy-chain and External Device Monitoring (EDM)

- b 2 OSSD safety outputs (PNP) and 2 OSSD safety inputs
- b External Device Monitoring (EDM)
- b Unique or unlimited pairing available
- b Up to 16 switches can be connected in series
- b Automatic pairing process for the unlimited pairing model

Category 4/PL = e, SIL3, SILCL3

XCSRM13M12 and XCSRM13L01M12	**XCSRMU3M12 and XCSRMU3L01M12**
Unique coded	Unlimited pairing possible

The switches are available with M12 connector and pigtail connection format.

Page 99

(1) The switch and actuator are supplied together, already factory-paired with a unique code.

(2) For these switches, the reader and actuator are supplied together, already factory-paired with a unique code. However, the reader can be re-paired (twice only) with a new (blank) actuator (see page 100). Once the new actuator has been paired, the previous actuator is no longer usable. A new blank actuator can only be paired once.

YAGEO 1159 Sensors

Safety detection solutions

Contactless RFID safety switches

XCSRM miniature format

Single model (5-pin) and advanced model (8-pin)

Type of contactless RFID switch			XCSRM10Lpp, XCSRM10ppM12, XCSRM30Lpp, XCSRM30ppM12, XCSRML0Lppp, XCSRML0M12, XCSRML0L01M12	XCSRMp3M12, XCSRMp3LppM12
Environment				
Conforming to standards			EN IEC 60947-5-2, EN IEC 60947-5-3, EN ISO 13849-1, IEC 61508, EN IEC 62061, EN ISO 14119, UL 508, CSA C22.2 N°14	
Product certifications			Tüv, cULus, FCC, IC, UKCA, ECOLAB	
Maximum safety level *(2)*			SIL3 conforming to IEC 61508, SILCL3 conforming to IEC 62061, and PL=e, category 4 conforming to EN/ISO 13849-1 *(1)*	
Ambient air temperature	For operation		-25…+70°C	
	For storage		-25…+70°C	
Vibration resistance	Conforming to EN/IEC 60068-2-6		± 1 mm amplitude (10 .. 55Hz), 5 min	
Shock resistance	Conforming to EN/IEC 60068-2-27		30 gn, impulse duration 11 ms, in all 3 axes	
Protection against electric shock	Conforming to EN/IEC 61140		Class III	
Degree of protection	Conforming to EN/IEC 60529		IP65, IP67 conforming to IEC 60529, conforming to DIN 40050	
	Conforming to DIN 40050		IP69K (except M12 connector and pigtail)	
Materials	Housing		Nylon (PK)	
	Cable		PVC	
Characteristics				
Rated impulse withstand voltage (U imp)	Conforming to EN/IEC 60947-5-2		1 kV	
Integrated output protection			Short Circuit protection conforming to EN/IEC 60947-5-3	
Connection	Conforming to EN/IEC 60947-5-2-A3 and EN/IEC 61076		M12 connector (A coding)	
Safety outputs 2 PNP NO OSSDs (output signal switching devices)	Maximum current		300 mA	
Maximum switching frequency			1 Hz	
Delay	Power-on		10 s, 15 s Max	
Maximum response time (on transponder entry into operating zone)			≤ 250 ms	
Risk time (on transponder exit from operating zone)			Tr < 55 ms , addition of 12 ms per switch in Daisy-Chain	
Probability of dangerous failure per hour PFH_D	Conforming to EN/ISO13849-1 and EN/IEC 62061		2.62×10^{-9} Per reader	
Tightening torque	M4 retaining screw	Switch	0.8 - 1.5 Nm	
		Actuator	0.8 - 1.2 Nm	
	M12 connectors		0.8 Nm	
Mission time (TM)			20 years	
RFID protocol			Low Frequency based on ISO/IEC 18000-2	
Functions				
Functions			Automatic start/restart without EDM Point-to-point connection to a safety control unit State (PNP) output to Non Safety control unit (PLC) LED indicators for status and diagnosis	Automatic start/restart with or without EDM Manual start/restart with or without EDM Series connection (daisy-chain) Point-to-point connection to a safety control unit Diagnostic output to Non Safety control unit (PLC) LED indicators for status and diagnosis

(1) With an appropriate, correctly connected safety control system for daisy-chain and single models.

Safety detection solutions

Contactless RFID safety switches

XCSRM miniature format

Single model, 5-pin connector

Type	Single miniature contactless RFID safety switches		
Connection	M12 connector	Pre-cabled (5 wires)	Pigtail M12 connector

ECOLAB Certified

References

Composition		Unique pairing	Two new pairings possible	Generic coded	Weight (kg)
b Switch b Actuator b Actuator and switch factory paired b 6 blanking plugs b Quick Start Guide b EU and UKCA declaration of conformity	2 m cable	**XCSRM10L02**	**XCSRM30L02**	**XCSRML0L02**	0.150
	5m cable	**XCSRM10L05**	**XCSRM30L05**	**XCSRML0L05**	0.309
	10 m cable	**XCSRM10L10**	**XCSRM30L10**	**XCSRML0L10**	0.562
	M12 connector	**XCSRM10M12**	**XCSRM30M12**	**XCSRML0M12**	0.044
	Pigtail M12 connector	**XCSRM10L01M12**	**XCSRM30L01M12**	**XCSRML0L01M12**	0.056

Detection characteristics *(2)*

Typical operating sensing distance (for detection of transponder presence)	12
Assured operating sensing distance	10
Assured release distance	25
Repeat accuracy	≤1.2%
Hysteresis	< 20%

Output states

Output states shown are with the dedicated transponder positioned in front of the reader.

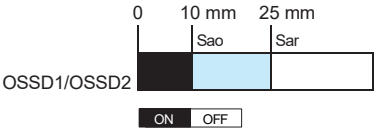

Outputs closed
Outputs open
Transient state

Sao: Assured operating sensing distance
Sar: Assured release distance
Conforming to EN/IEC 60947-5-3

Connections

5-pin M12 connector

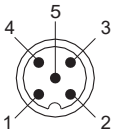

1 + 24 V c
2 OSSD1 Safety output
3 0 V c
4 OSSD2 Safety output
5 Status

Dimensions

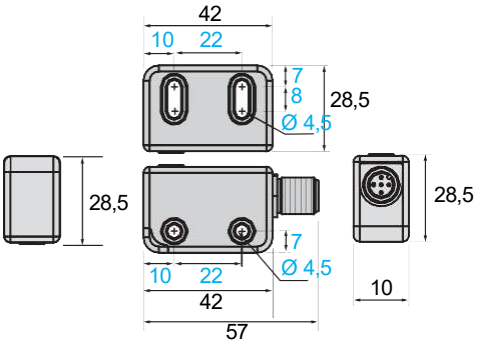

(1) The start command is effective after the operator has pressed and released the start button.
(2) These values are given for a face-to-face mounting configuration of the reader and transponder on a non-magnetic support, without misalignment between the transponder and the reader, and at an ambient temperature between +20 and +25 °C.

Safety detection solutions

Contactless RFID safety switches

XCSRM miniature format

Advanced model, 8-pin connector

Type	Advanced miniature contactless RFID safety switches	
Connection	M12 connector	Pigtail, 8-pin M12 connector,

ECOLAB Certified

References

Composition	Unique pairing	Unlimited pairings	Generic coded	Weight (kg)
b Factory-paired switch and actuator b 6 blanking plugs b Quick Start Guide b EU and UKCA declaration of conformity	XCSRM13M12	XCSRMU3M12	XCSRML3M12	0.044
	XCSRM13L01M12	XCSRMU3L01M12	XCSRML3L01M12	0.056

Detection characteristics *(2)*

Typical operating sensing distance (for detection of transponder presence)	12
Assured operating sensing distance	10
Assured release distance	25
Repeat accuracy	≤1.2%
Hysteresis	< 20%

Output states

Output states shown are with the dedicated transponder positioned in front of the reader.

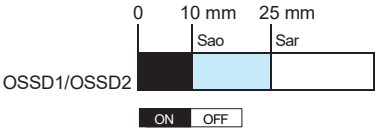

Outputs closed
Outputs open
Transient state

Sao: Assured operating sensing distance
Sar: Assured release distance
Conforming to EN/IEC 60947-5-3

Connections

8-pin M12 connector

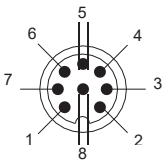

1 + 24 V c
2 Safety input 1 for daisy-chain
3 0 V c
4 OSSD1 Safety output
5 Status
6 Safety input 2 for daisy-chain
7 OSSD2 Safety output
8 EDM/Restart/Serial

Dimensions

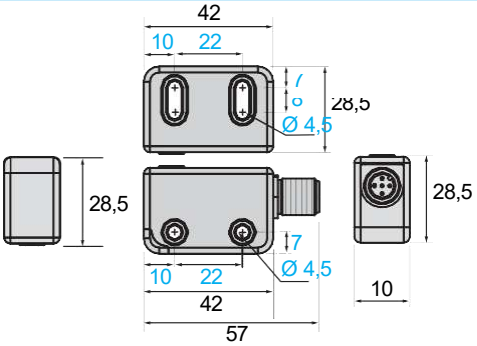

(1) The start command is effective after the operator has pressed and released the start button.
(2) These values are given for a face-to-face mounting configuration of the reader and transponder on a non-magnetic support, without misalignment between the transponder and the reader, and at an ambient temperature between +20 and +25 °C.

Safety detection solutions

Contactless RFID safety switches

Accessories for XCSRM miniature format

XCSRK1BU

XCSRK1BL

XCSRZYp

XCSRZSTK1

XZCP11V12Lp

XZCP12V12Lp

XZCR1511064Dp

XZCP29P12Lp

XZCP53P12Lp

XZCR2829P11Dp

XZCC12FDM50B

XZCC12FCM50B

XZCC12FDM80B

XZCC12FCM80B

Actuators

Description	Used with	Reference	Weight (kg)
Actuator, Unlimited pairing	XCSRMU..... , XCSRM3....	**XCSRK1BU**	0.19
Actuator, Generic coded	XCSRML....	**XCSRK1BL**	0.19

Splitter connectors

Description	Poles	Used with	Reference	Weight (kg)
Splitter M12 connector, Female-Male-Female (Y connector)	8-8-5, 1st switch in daisy chain	XCSRM.3...	**XCSRZY1**	0.026
	8-5-5, other switches in daisy chain		**XCSRZY2**	0.026

Mounting accessories

Description	Used with	Reference	Weight (kg)
Mounting supports	Switch and actuator	**XCSRZSTK1**	0.050

Cables

Description	Connector type	Length (m)	Reference	Weight (kg)
PUR pre-wired cables, 5 pins, for single XCSRM•0••• and advanced XCSRM•3••• *(1)* models				
PUR cable with pre-wired connectors XZCP	M12, female, straight, 5 pins	2	**XZCP11V12L2**	0.100
		5	**XZCP11V12L5**	0.250
		10	**XZCP11V12L10**	0.500
		20	**XZCP11V12L20**	1.000
	M12, female, elbowed, 5 pins	2	**XZCP12V12L2**	0.100
		5	**XZCP12V12L5**	0.250
		10	**XZCP12V12L10**	0.500
		20	**XZCP12V12L20**	1.000
PUR jumper cable, 5 pins, for Y connectors (XCSRM•3••• in daisy-chain connection)				
	Male / Female			
Jumper cable XZ	M12, straight, 5 pins / M12, straight, 5 pins	1	**XZCR1511064D1**	0,08
		2	**XZCR1511064D2**	0,13
		5	**XZCR1511064D5**	0,325
		10	**XZCR1511064D10**	0,325
PUR pre-wired cables, 8 pins, for XCSRM•3••• standalone, EDM connection				
Pre wired connectors XZ	M12, female, straight, 8 pins	2	**XZCP29P12L2**	0,100
		5	**XZCP29P12L5**	0.250
		10	**XZCP29P12L10**	0.500
		20	**XZCP29P12L20**	1.000
	M12, female, elbowed, 8 pins	2	**XZCP53P12L2**	0.100
		5	**XZCP53P12L5**	0.250
		10	**XZCP53P12L10**	0.500
		20	**XZCP53P12L20**	1.000
PUR jumper cable, 8 pins, for XCSRM•3••• in daisy-chain connection				
	Male / Female			
PUR jumper cable	M12, 8-pin, straight / M12, 8-pin, straight		**XZCR2829P11D2**	0.109
			XZCR2829P11D5	0.265
			XZCR2829P11D10	0.520
			XZCR2829P11D20	1.025

Cables glands

Description	Connector type	Nb of pins	Used with	Reference	Weight (kg)
M12 cable gland Pg 7, female Screw terminal and metal clamping ring	Straight	5	XCSRM•0•••	**XZCC12FDM50B**	0,020
	Elbowed 90°			**XZCC12FCM50B**	0,020
M12 cable gland, female Screw terminal and metal clamping ring	Straight	8	XCSRM•3•••	**XZCC12FDM80B**	0,020
	Elbowed 90°			**XZCC12FCM80B**	0,020

(1) With XCSRM•3•••, only for the connection between a safety control unit and the last XCSRM•3••• switch of a daisy chain

YAGEO 1163 Sensors

Safety detection solutions

Contactless RFID safety switches

XCSRM miniature format

Single and advanced models, accessories

Safety switches

Switch with M12 connector

XCSRM1pM12

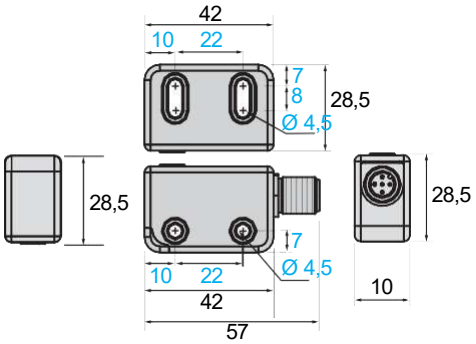

Switch with pigtail connector or pre-cabled

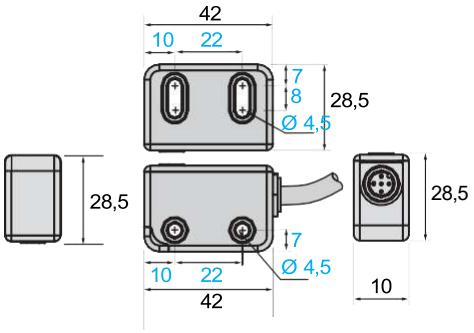

Accessories

Actuators

XCSRK1BU, XCSRK1BL

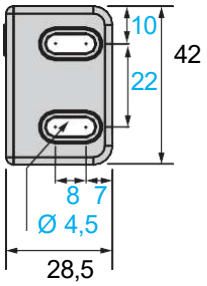

Splitter connector

XCSRZY1, XCSRZY2

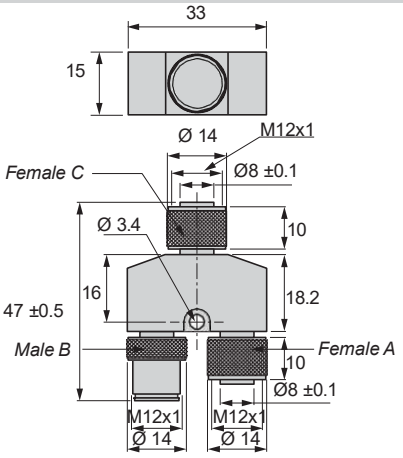

Mounting support for switch and actuator

XCSRZSTK1

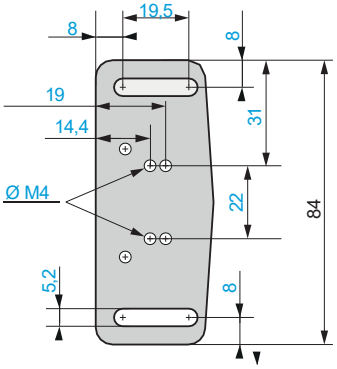

Mounting

Examples of face-to-face mounting configurations (recommended)

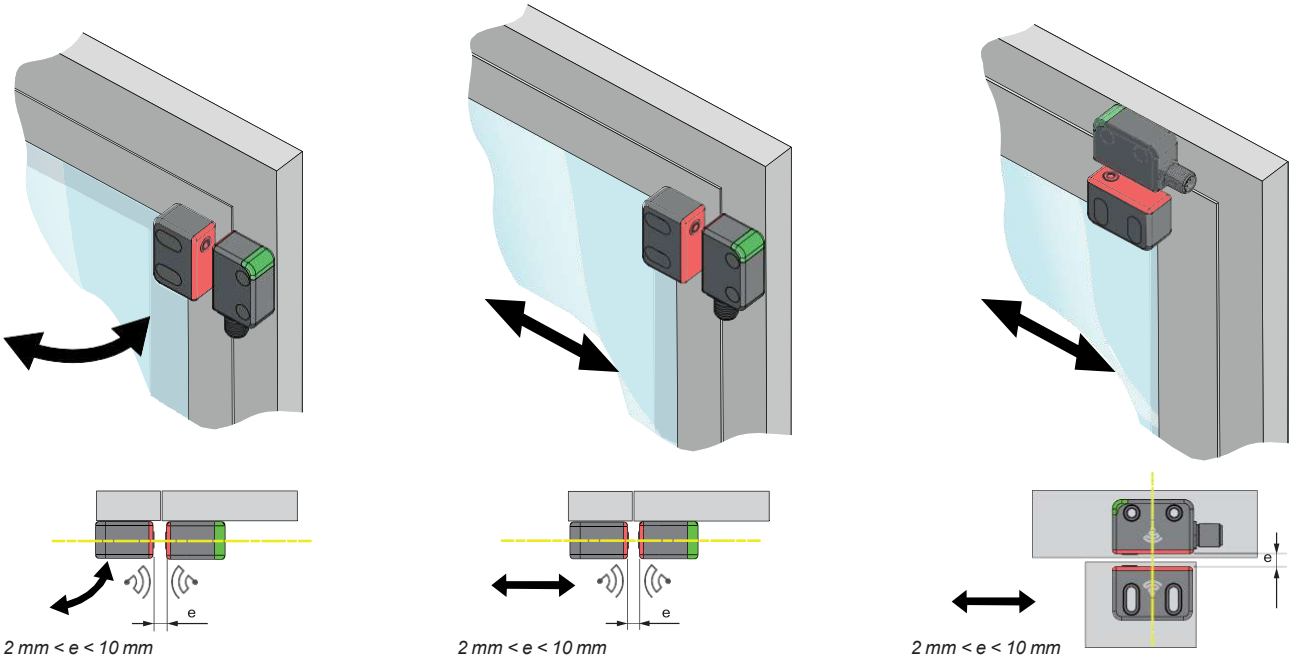

e: minimum recommended mounting distance between actuator and switch

Curves

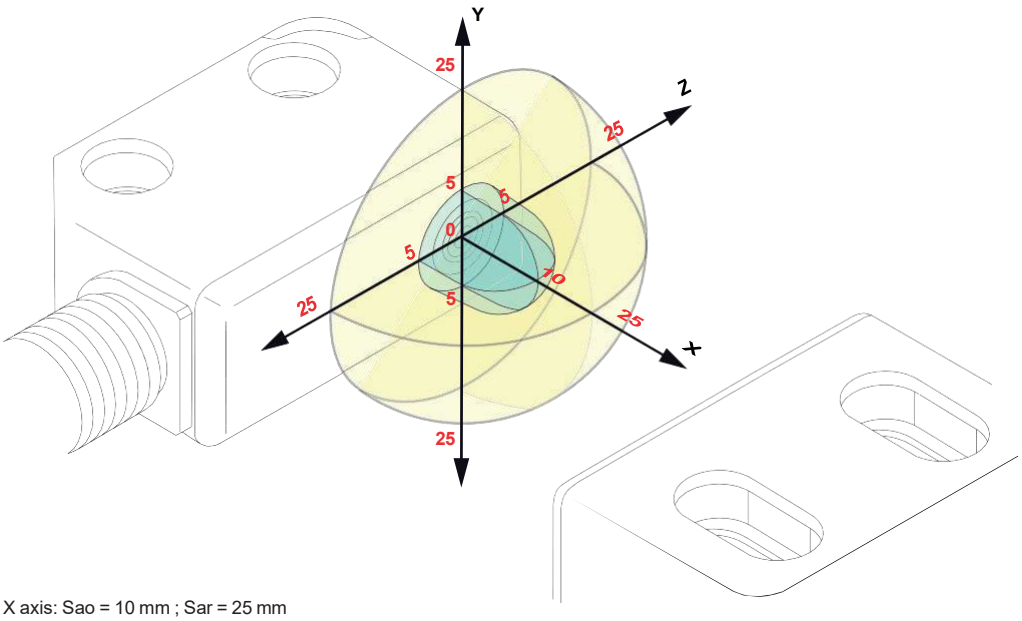

X axis: Sao = 10 mm ; Sar = 25 mm
Y axis: Sao = 5 mm ; Sar = 25 mm
Z axis: Sao = 5 mm ; Sar = 25 mm

Schemes

Note: these schemes are given as examples only, the designer should refer to the relevant safety standards for guidance.

Single Model - Connecting with a XPSUAK module

Example of Category 4/PL = e/SIL 3 connection

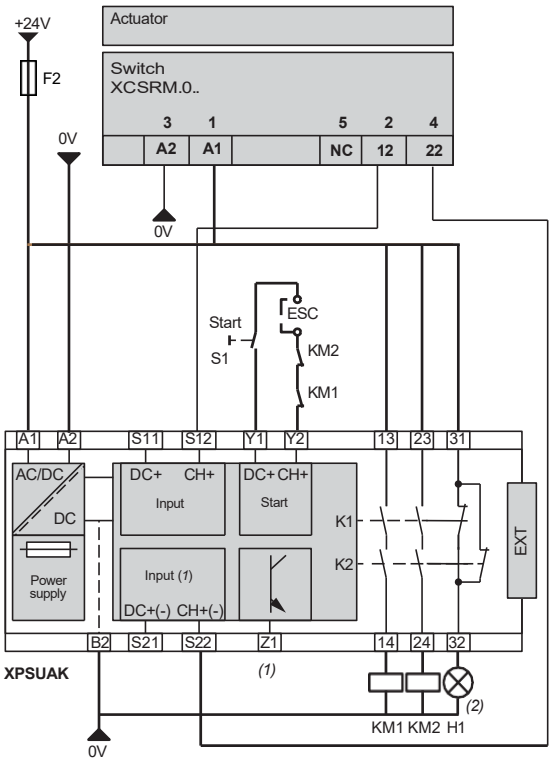

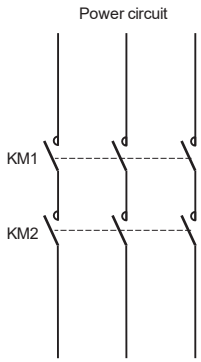

1 + 24 Vdc
2 12
3 0 Vdc
4 22
5 Status

(1) Pulsed output for diagnostics
(2) XCSRM RFID safety switch indicator light deactivated

Advanced model - Series Connecting with a XPSUAF module

Example of Category 4/PL = e/SIL 3 series connection

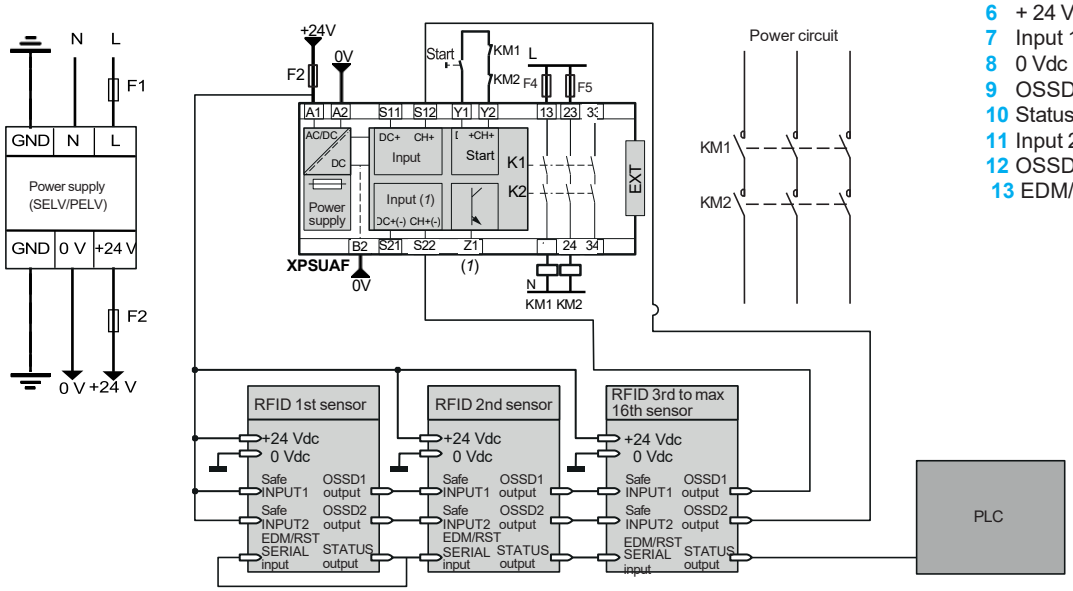

6 + 24 Vdc (BN) Brown
7 Input 1 (WH) White
8 0 Vdc (BU) Blue
9 OSSD 1 (YE) Yellow
10 Status (GY) Grey
11 Input 2 (PK) Pink
12 OSSD 2 (PU) Purple
13 EDM/Restart/Serial (OR) Orange

(1) Pulsed output for diagnostic

Safety detection solutions

Safety coded magnetic switches

XCSDMC compact rectangular
XCSDMP standard rectangular, XCSDMR cylindrical
Plastic

ECOLAB Certified

XCSDMC

Rectangular, compact: 51 x 16 x 7 (mm)

Pre-cabled connection	Connector on flying lead connection
Page 106	Page 107

XCSDMP

Rectangular, standard: 88 x 25 x 13 (mm)

Pre-cabled connection	Connector on flying lead connection
Page 106	Page 107

XCSDMR

Cylindrical, diameter: 30, length: 38.5 (mm)

Pre-cabled connection	Connector on flying lead connection
Page 106	Page 107

YAGEO 1167 Telemecanique Sensors

Safety detection solutions

Safety coded magnetic switches
XCSDMC compact rectangular
XCSDMP standard rectangular, XCSDMR cylindrical
Plastic

Environment		
Conformity to standards	Products	EN/IEC 60947-5-1, UL 508, CSA C22-2 no. 14
	Machine assemblies	EN/IEC 60204-1, EN/ISO 14119 (Low Level of Coding)
Product certifications		UL, CSA, EAC, ECOLAB
Maximum safety level *(1)*		PL=e, category 4 conforming to EN/ISO 13849-1 and SIL 3 conforming to EN/IEC 61508
Reliability data B_{10D}		50,000,000 (value given for a service life of 20 years, limited by mechanical or contact wear)
Ambient air temperature	For operation	-25…+85 °C
	For storage	-40…+85 °C
Vibration resistance		10 gn (10…150 Hz) conforming to EN/IEC 60068-2-6
Shock resistance		30 gn (11 ms) conforming to EN/IEC 60068-2-27
Sensitivity to magnetic fields		u 0.3 mT
Electric shock protection		Class II conforming to EN/IEC 61140
Degree of protection	Conforming to IEC 60529	IP 66 and IP 67 for coded magnetic switches with pre-cabled connection IP 67 for coded magnetic switches with connector on flying lead connection
Materials		Thermoplastic case (PBT) PVC cable (ROHS)
Contact block characteristics		
Rated operational characteristics		Ue: 24 V c, Ie: 100 mA max.
Rated insulation voltage (Ui)		Ui: 100 V c
Rated impulse withstand voltage (U imp)		2.5 kV conforming to EN/IEC 60947-5-1
Resistance across terminals	Contact with LED	57 Ω
	Contact without LED	10 Ω
Protection (of the fuse for the safety control unit protection)		External cartridge fuse: 500 mA gG (gl) (use a UL-recognized Type CC fuse in the United States). Optionally, in series with each switch contact to avoid damage to the internal protection in case of misuse.
Connection XCSDMC	2-contact model	Pre-cabled, 4 x 0.25 mm², length: 2, 5 or 10 m depending on model or 4-pin male M8 connector on 0.15 m flying lead
XCSDMP	2-contact model	Pre-cabled, 4 x 0.25 mm², length: 2, 5 or 10 m depending on model or 4-pin male M12 connector on 0.15 m flying lead
	3-contact model	Pre-cabled, 6 x 0.25 mm², length: 2, 5 or 10 m depending on model or 8-pin male M12 connector on 0.15 m flying lead
XCSDMR	2-contact model	Pre-cabled, 4 x 0.25 mm², length: 2, 5 or 10 m depending on model or 4-pin male M12 connector on 0.15 m flying lead
Contact material		Rhodium
Electrical durability		1.2 million operating cycles
Switching capacity	Contact with LED	5…100 mA
	Contact without LED	0.1…100 mA
Insulation resistance		1000 MΩ
Maximum breaking capacity	Contact with LED	3 VA
	Contact without LED	10 VA
Maximum switching frequency		150 Hz

(1) Using an appropriate and correctly connected safety control unit.

ECOLAB
Certified

Safety detection solutions

Coded magnetic safety switches

XCSDMC compact rectangular
XCSDMP standard rectangular, XCSDMR cylindrical
Plastic, pre-cabled

Type of switch	Rectangular		Cylindrical
	Compact 51 x 16 x 7	Standard 88 x 25 x 13	Diameter 30 Length 38.5

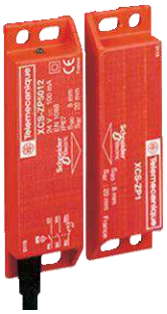

References of switches *(1)* d should be used in conjunction with safety control units (see page 32942/8)

Contact states shown are with the magnet positioned in front of the switch

2-pole 1 NC + 1 NO (staggered)	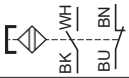	**XCSDMC5902**	**XCSDMP5902**	**XCSDMR5902**
2-pole 2 NC *(2)* (staggered)	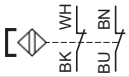	**XCSDMC7902**	**XCSDMP7902**	**XCSDMR7902**
3-pole 1 NC + 2 NO (1 NO staggered)	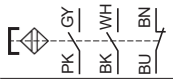	–	**XCSDMP5002**	–
3-pole 2 NC + 1 NO *(2)* (1 NC staggered)	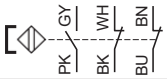	–	**XCSDMP7002**	–
2-pole 1 NC + 1 NO (staggered)	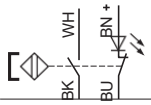	**XCSDMC5912**	**XCSDMP5912**	**XCSDMR5912**
2-pole 2 NC *(2)* (staggered)	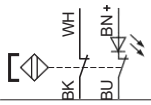	**XCSDMC7912**	–	**XCSDMR7912**
3-pole 1 NC + 2 NO (1 NO staggered)	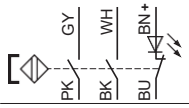	–	**XCSDMP5012**	–
3-pole 2 NC + 1 NO *(2)* (1 NC staggered)	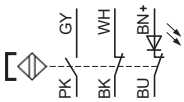	–	**XCSDMP7012**	–
Weight (kg)		0.101	0.180	0.146

*(1) The references of **XCSDMp** switches comprise a coded magnet (XCSZ**p**1) and a magnetic switch (XCSZ**pp**). Example: XCSDMP5012 comprises XCSZP1 (magnet) + XCSZP5012 (switch). Only the coded magnets are available as spare parts (see on page 32942/4).*
*Switch pre-cabled with 2 m long cable. For other cable lengths, replace the last number of the reference **(2)** with **5** for a 5 m long cable or with **10** for a 10 m long cable.*
*Example: rectangular, compact switch with 1 NC + 1 NO contacts and 10 m cable becomes **XCSDMC59010**.*
*(2) To be associated with a safety control unit which allows 2 NC contact monitoring (for example XPSUAF**p**, XPSUS**p**, XPSUDN**p**, etc.).*

Complementary characteristics not shown under general characteristics (page 32941/3)

Operating zone	Sao: 5 mm Sar: 15 mm	Sao: 8 mm Sar: 20 mm	Sao: 8 mm Sar: 20 mm
Approach directions	3 directions	3 directions	1 direction

Accessories

See page 32942/4

Dimensions:
page 110

YAGEO 1169 Telemecanique Sensors

Safety detection solutions

Coded magnetic safety switches

XCSDMC compact rectangular
XCSDMP standard rectangular, XCSDMR cylindrical
Plastic, connector on flying lead

Type of switch	Rectangular		Cylindrical
	Compact 51 x 16 x 7	Standard 88 x 25 x 13	Diameter 30 Length 38.5
	M8 connector	**M12 connector**	**M12 connector**

References of switches *(1)* d should be used in conjunction with safety control units (see page 112)

Contact states shown are with the magnet positioned in front of the switch

2-pole 1 NC + 1 NO (staggered)	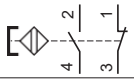	**XCSDMC590L01M8**	**XCSDMP590L01M12**	**XCSDMR590L01M12**
2-pole 2 NC *(2)* (staggered)	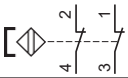	**XCSDMC790L01M8**	**XCSDMP790L01M12**	**XCSDMR790L01M12**
3-pole 1 NC + 2 NO (1 NO staggered)	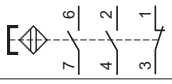	–	**XCSDMP500L01M12**	–
3-pole 2 NC + 1 NO *(2)* (1 NC staggered)	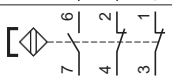	–	**XCSDMP700L01M12**	–
2-pole 1 NC + 1 NO (staggered)	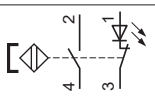	**XCSDMC591L01M8**	**XCSDMP591L01M12**	**XCSDMR591L01M12**
2-pole 2 NC *(2)* (staggered)	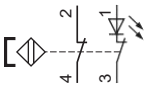	**XCSDMC791L01M8**	**XCSDMP791L01M12**	**XCSDMR791L01M12**
3-pole 1 NC + 2 NO (NO staggered)	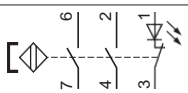	–	**XCSDMP501L01M12**	–
3-pole 2 NC + 1 NO *(2)* (NC staggered)	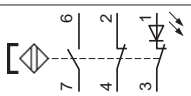	–	**XCSDMP701L01M12**	–
Weight (kg)		0.101	0.180	0.146

*(1) The references of **XCSDMp** switches comprise a coded magnet (XCSZ**p**1) and a magnetic switch (XCSZ**pp**). Only the coded magnets are available as spare parts (see on page 108).*
Example: XCSDMC590L01M8 comprises XCSZC1 (magnet) + XCSZC590L01M8 (switch).

*(2) To be associated with a safety control unit which allows 2 NC contacts monitoring (for example XPSUAF**p**TE, XPSUS**p**TE, XPSUDN**p**TE, etc.)*

Complementary characteristics not shown under general characteristics (page 105)

Operating zone	Sao: 5 mm Sar: 15 mm	Sao: 8 mm Sar: 20 mm	Sao: 8 mm Sar: 20 mm
Approach directions	3 directions	3 directions	1 direction

Accessories

See page 108

Dimensions:
page 110

Safety detection solutions

Coded magnetic safety switches
XCSDMC compact rectangular
XCSDMP standard rectangular, XCSDMR cylindrical
Accessories

Accessories

Accessories for coded magnetic switches	XCSDMCppp2 XCSDMCpppL	XCSDMPppp2 XCSDMPpppL	XCSDMRppp2 XCSDMRpppL
Fixing clamp	–		**XSZB130**
Weight (kg)	–		0.080
Additional coded magnet	**XCSZC1**	**XCSZP1**	**XCSZR1**
Weight (kg)	0.009	0.050	0.018
Non-magnetic shims	XCSZCC (lot of 2)	XCSZCP (lot of 2)	**XCSZCR**
Weight (kg)	0.008	0.012	0.002

Pre-wired female connectors for connector version switches
Pre-wired connector characteristics

Pre-wired connector type		XZCP0941Lp, XZCP1041Lp	XZCP29P11Lp	XZCP1141Lp, XZCP1241Lp
Type of connection		Screw thread (metal clamping ring)	Screw thread (metal clamping ring)	Screw thread (metal clamping ring)
Number of contacts		4	8	4
Degree of protection		IP 67 (with clamping ring correctly tightened)		
Ambient air temperature	Static	-35…+90 °C	-35…+90 °C	-35…+90 °C
	Dynamic	-5…+90 °C	-5…+90 °C	-5…+90 °C
Cabling	Ø cable	5.2 mm	5.2 mm	5.2 mm
	wire c.s.a	4 x 0.34 mm²	8 x 0.25 mm²	4 x 0.34 mm²
LED signaling		–	–	–
Nominal voltage		60 V a, 75 V c	30 V a, 36 V c	250 V a, 300 V c
Nominal current		4 A	2 A	4 A
Insulation resistance		> 10^9 Ω	> 10^9 Ω	> 10^9 Ω
Contact resistance		y 5 mΩ	y 5 mΩ	y 5 mΩ

References of pre-wired connectors (For connection to flying lead models)

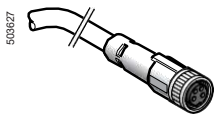

XZCP0941Lp

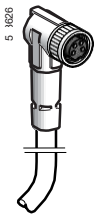

XZCP1041Lp

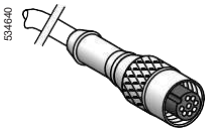

XZCP29P11Lp

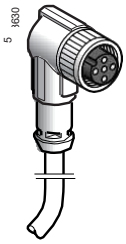

XZCP1241Lp

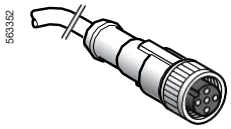

XZCP1141Lp

Type of connector	Number of pins	For use with	Type	Cable length m	Reference	Weight kg
Female, M8	4	XCSDMC.9.	Straight	2	**XZCP0941L2**	0.080
				5	**XZCP0941L5**	0.180
				10	**XZCP0941L10**	0.360
			Elbowed	2	**XZCP1041L2**	0.080
				5	**XZCP1041L5**	0.180
				10	**XZCP1041L10**	0.360
Female, M12	8	XCSDMP.0.	Straight	2	**XZCP29P11L2**	0.100
				5	**XZCP29P11L5**	0.290
				10	**XZCP29P11L10**	0.470
Female, M12	4	XCSDMP.9./ XCSDMR.9.	Straight	2	**XZCP1141L2**	0.090
				5	**XZCP1141L5**	0.190
				10	**XZCP1141L10**	0.370
			Elbowed	2	**XZCP1241L2**	0.090
				5	**XZCP1241L5**	0.190
				10	**XZCP1241L10**	0.370

Dimensions:
page 111

Safety detection solutions

Coded magnetic safety switches
XCSDMC compact rectangular
XCSDMP standard rectangular, XCSDMR cylindrical

Function diagrams with magnet present

XCSDMC59pp

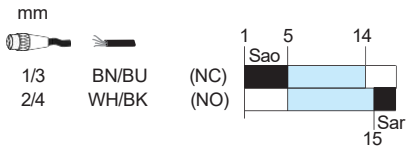

XCSDMC79pp

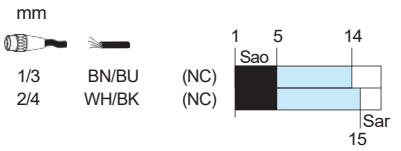

XCSDMP50pp

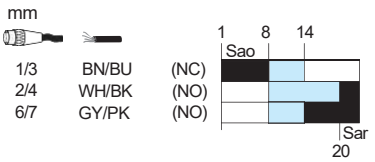

XCSDMP70pp

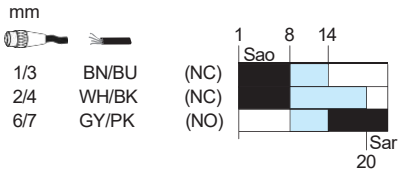

XCSDMR59pp/XCSDMP59pp

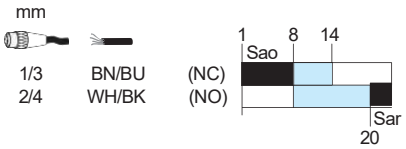

XCSDMR79pp/CS DMP79pp

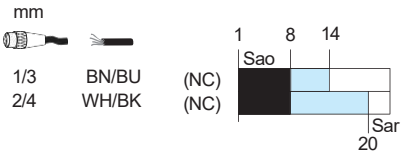

Contact closed

Contact open

Transient state

Sao: assured operating distance.
Sar: assured release distance.
Conforming to EN/IEC 60947-5-3

References:
page 106

Safety detection solutions

Coded magnetic safety switches
XCSDMC compact rectangular
XCSDMP standard rectangular, XCSDMR cylindrical
Plastic

Coded magnetic switches

XCSDMC

Pre-cabled connection

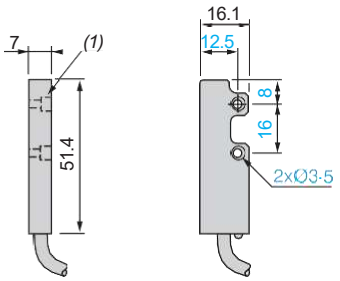

(1) Counterbored: Ø 6 x 3.5 mm.

Connector on flying lead connection

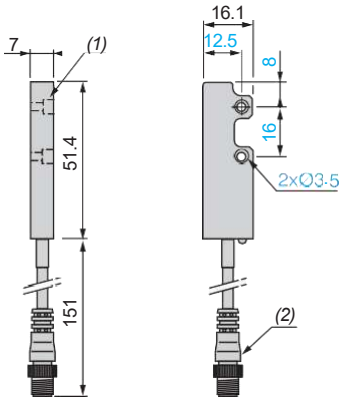

(1) Counterbored: Ø 6 x 3.5 mm.
(2) M8 4-pin connector.

Coded magnet for XCSDMC

XCSZC1

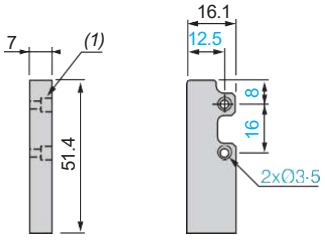

(1) Counterbored: Ø 6 x 3.5 mm.

XCSDMP

Pre-cabled connection

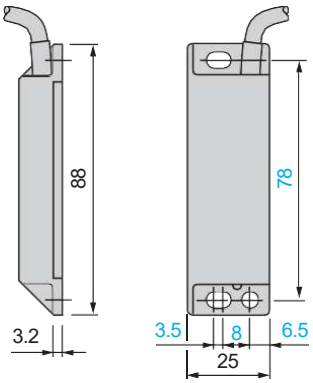

Connector on flying lead connection

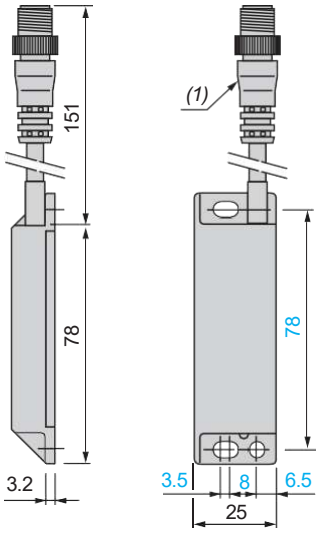

(1) M12 4 or 6-pin connector.

Coded magnet for XCSDMP

XCSZP1

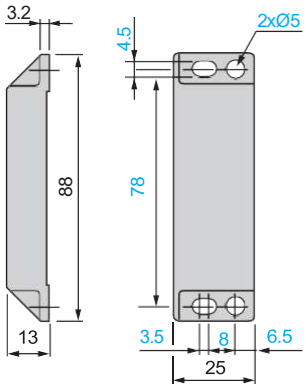

XCSDMR

Pre-cabled connection

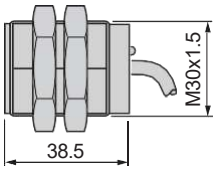

Connector on flying lead connection

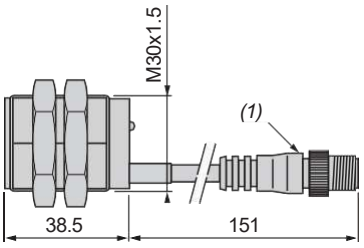

(1) M12 4-pin connector.

Coded magnet for XCSDMR

XCSZR1

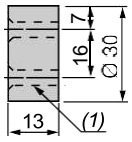

(1) 2 x Ø 4.3, countersunk: Ø 7.5 at 45°.

References:
page 106

Accessories

Fixing clamp

XSZB130

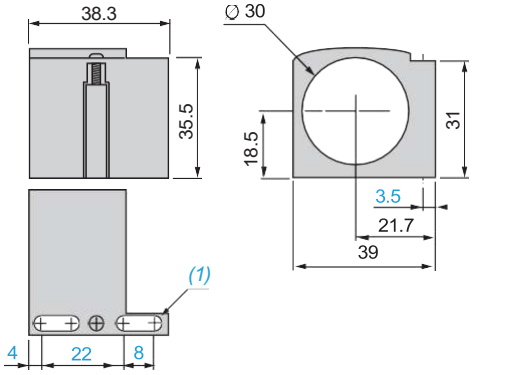

(1) 2 elongated holes Ø 4 x 8

Non-magnetic shims

XCSZCC

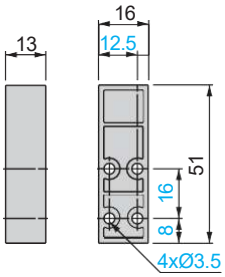

XCSZCP

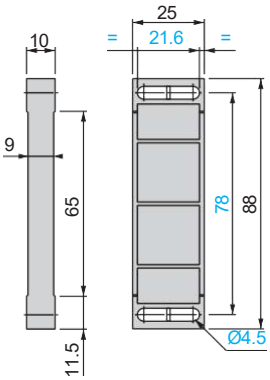

XCSZCR

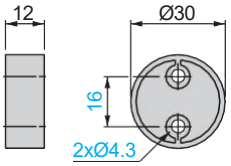

Pre-wired connectors

XZCP0941Lp

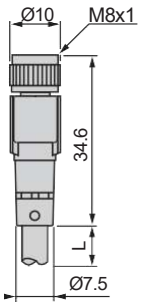

XZCP1041Lp

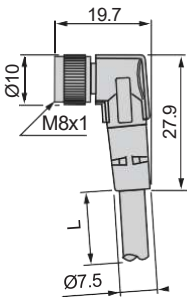

XZCP1141Lp

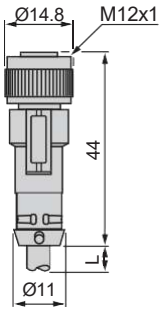

XZCP1241Lp

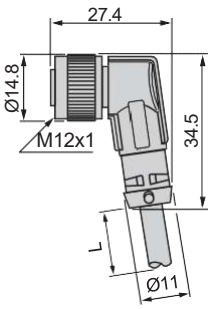

XZCP29P11Lp

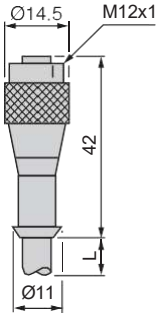

Mounting

XCSDMC

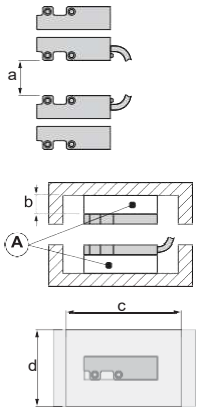

XCSDMP

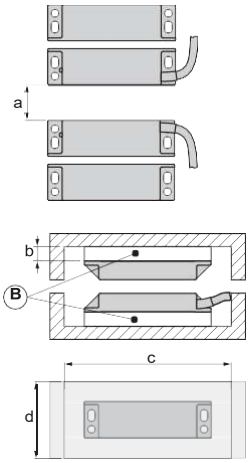

XCSDMR

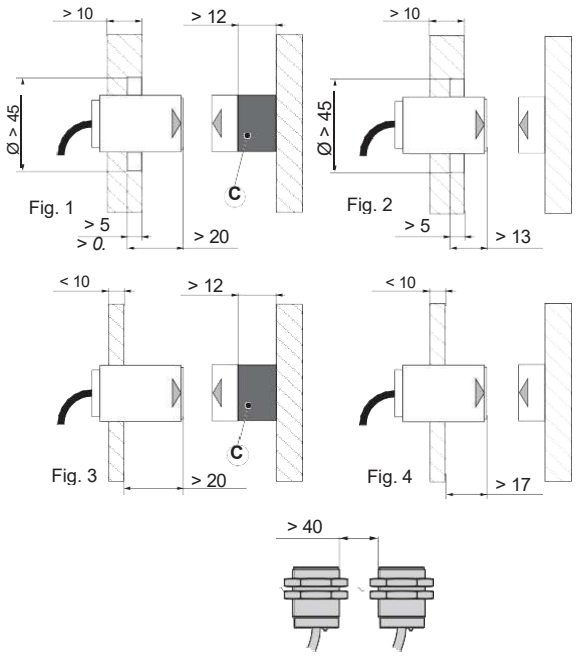

XCS *(mm)*	a u	b u	c x d u
DMC	40	13	81 x 55
DMP	100	10	118 x 55

Non-magnetic shims	
A	XCSZCC *(x2)*
B	XCSZCP *(x2)*
C	XCSZCR *(x1)*

Safety detection solutions

Coded magnetic safety switches

XCSDMC compact rectangular

XCSDMP standard rectangular, XCSDMR cylindrical

Schemes

M8 pre-wired connector

XZCP0941Lp

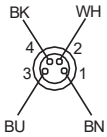

M12 pre-wired connector

XZCP1141Lp, XZCP1241Lp

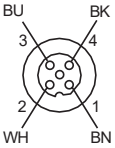

XZCP29P11Lp

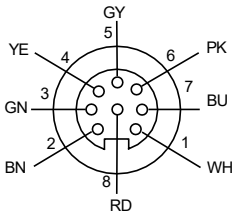

XCSDMp5ppp with XPSUSpTE

Wiring to PL=e, category 4 conforming to EN/ISO 13849-1 and SIL 3 conforming to EN/IEC 61508. Example with 3-pole 1 NC + 2 NO (1 NO staggered) contact.

Note: these schemes are given as examples only, the designer should refer to the relevant safety standards for guidance.

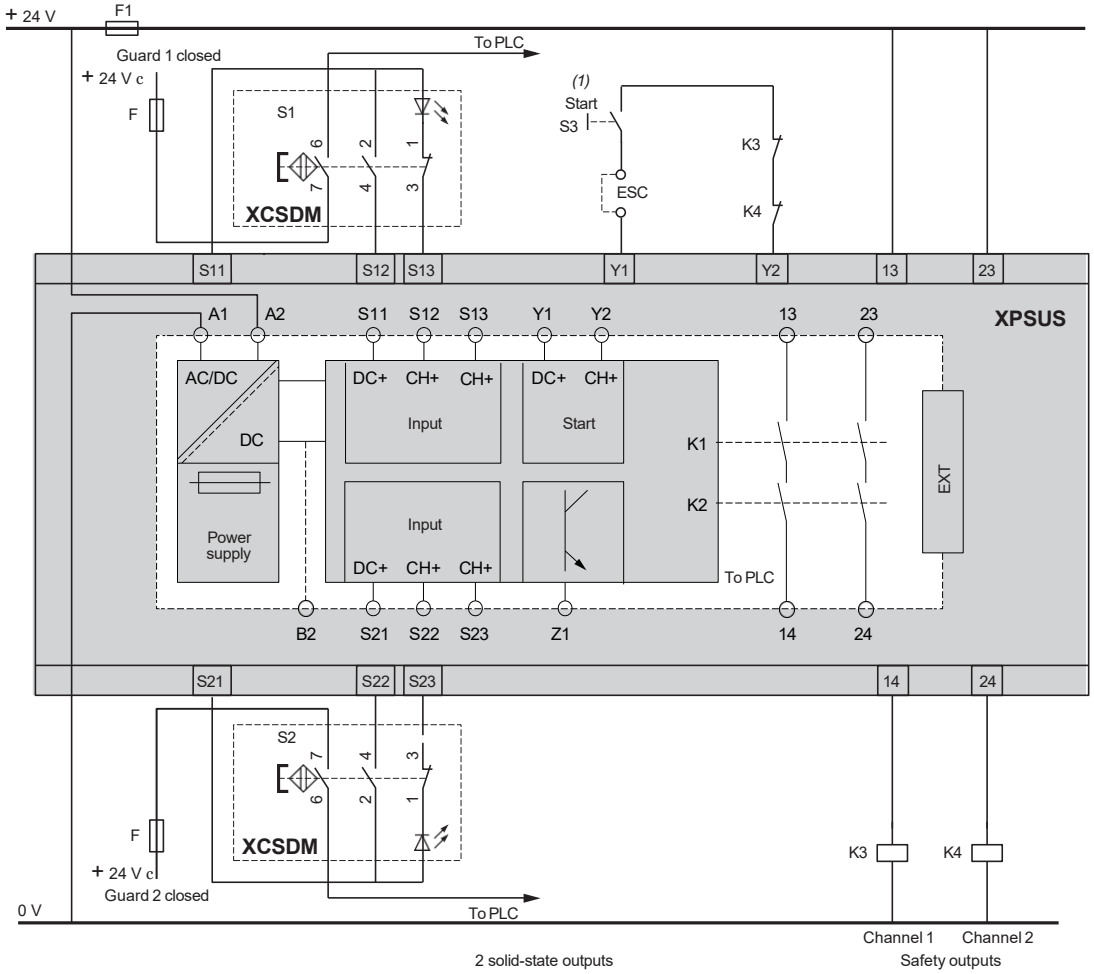

*(1) The start function is configured by means of the XPSUAF**p**TE start function selector.*

ESC: External start conditions.

References:
page 106

XCSDMp59pp with XPSUDNpTE

Wiring to PL=e, category 4 conforming to EN/ISO 13849-1 and SIL 3 conforming to EN/IEC 61508. Example with 2-pole 1 NC + 1 NO (staggered) contact.

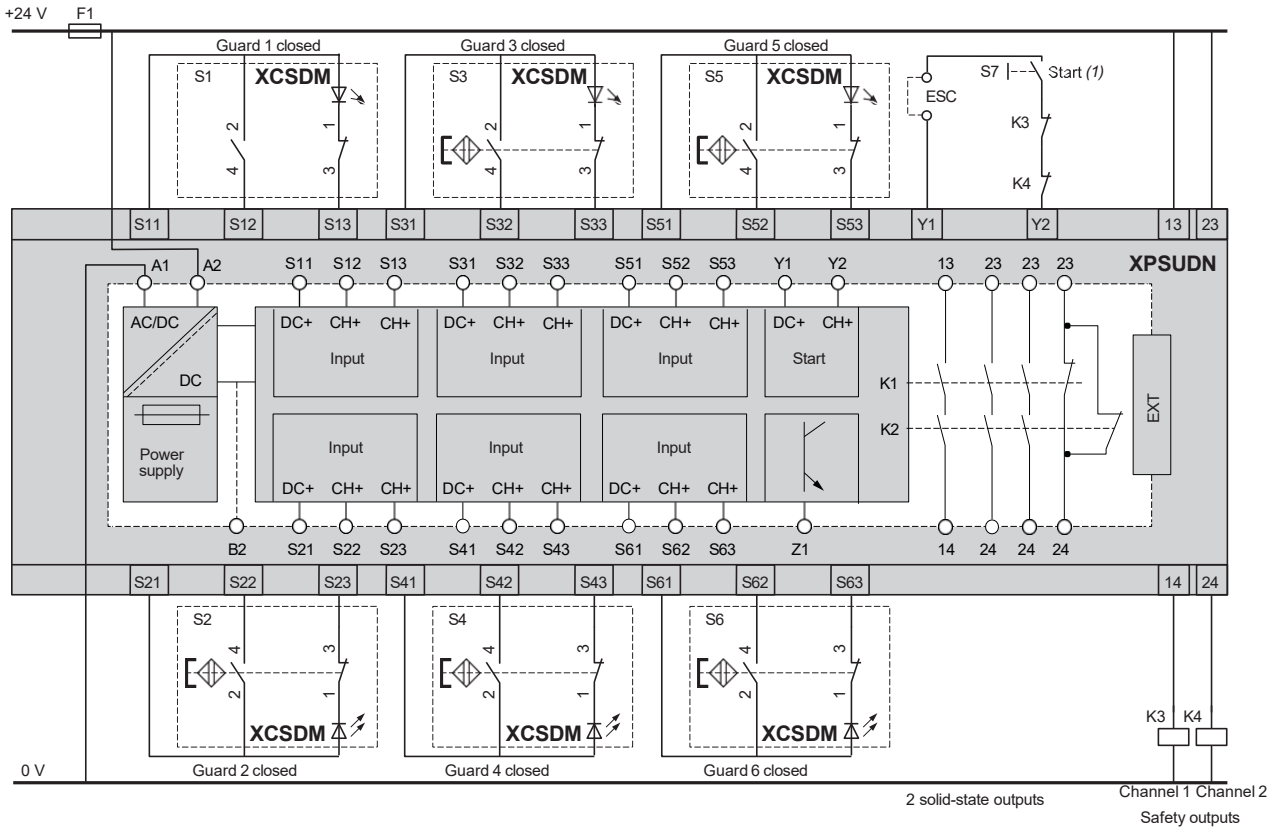

(1) The start function is configured by means of the XPSUAFpTE start function selector.

ESC: External start conditions.

XCSDMp79pp with XPSUAFpTE

Wiring up to PL=e, category 4 conforming to EN/ISO 13849-1 and SIL 3 conforming to EN/IEC 61508. Example with 2-pole 2 NC contact

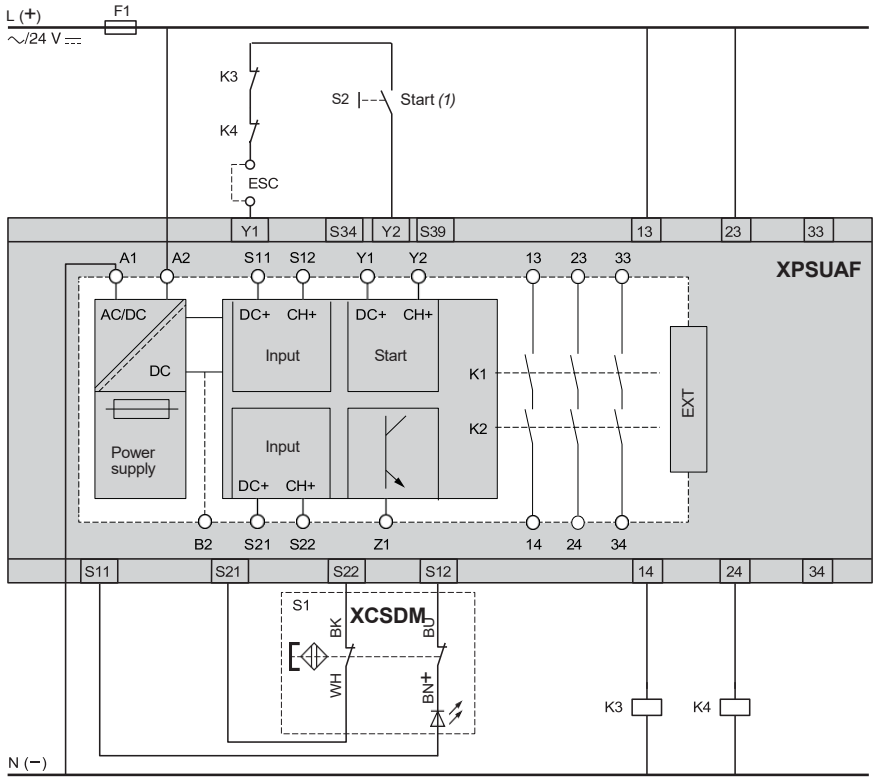

*(1) The start function is configured by means of the XPSUAF**p**TE start function selector.*

ESC: External start conditions.

Safety control units

XPSU universal safety relays

Safety functions		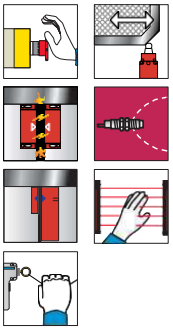	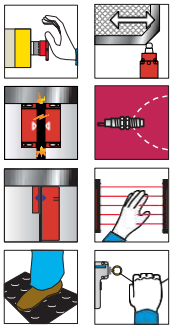
Safety modules for monitoring		- Emergency stop - Guard switch - Magnetic switch - Proximity safety switch - PNP sensor - RFID safety switch - Safety light curtain	- Emergency stop - Guard switch - Magnetic switch - Proximity safety switch - PNP & NPN sensor - RFID safety switch - Safety light curtain - Sensing mat/edges
Maximum achievable safety level		b PL e/Category 4 conforming to ISO 13849-1 b SILCL 3 conforming to IEC 62061 b SIL 3 conforming to IEC 61508	
Conformity to standards		b IEC 60947-5-1 b IEC 61508-1 (functional safety standard) b IEC 61508-2 (functional safety standard) b IEC 61508-3 (functional safety standard) b ISO 13849-1 (functional safety standard) b IEC 62061 (functional safety standard)	
Product certifications		b cULus b TÜV	
Number of outputs	Safety	3 NO	2 NO + 1 NC
	Diagnostic	1 solid state	1 redundant NC, 1 solid state
Display		6 LEDs	6 LEDs
Supply voltage		24 V a/c and 48 - 240 V a/c	
Synchronization time between inputs		Selectable	Selectable
Input channels	Number	2	2
Module type		**XPSUAFpTE**	**XPSUAKpTE**

Complete references and other XPSU universal safety relays are available on www.telemecaniquesensors.com

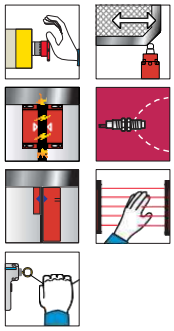	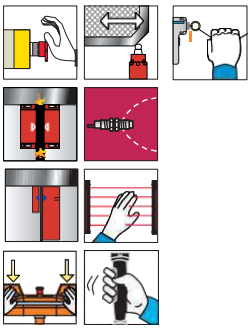	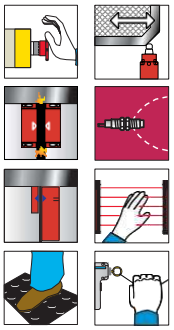
- Emergency stop - Guard switch - Magnetic switch - Proximity safety switch - PNP sensor - RFID safety switch - Safety light curtain	- Emergency stop - Guard switch - Magnetic switch - Proximity safety switch - PNP sensor - RFID safety switch - Safety light curtain - Two-hand control station - Enabling switch	- Emergency stop - Guard switch - Magnetic switch - Proximity safety switch - PNP & NPN sensor - RFID safety switch - Safety light curtain - Sensing mat/edges
b PL e/Category 4 conforming to ISO 13849-1 b SILCL 3 conforming to IEC 62061 b SIL 3 conforming to IEC 61508		
b IEC 60947-5-1 b IEC 61508-1 (functional safety standard) b IEC 61508-2 (functional safety standard) b IEC 61508-3 (functional safety standard) b ISO 13849-1 (functional safety standard) b IEC 62061 (functional safety standard)		
b cULus b TÜV		
3 NO + 1 NC	2 NO	3 NO immediate + 3 NO configurable + 1 NC configurable
1 redundant NC, 1 solid state	1 solid state	2 solid state
16 LEDs	8 LEDs	8 LEDs
24 V a/c and 48-240 V a/c		
Selectable	Selectable	Selectable
12	4	3
XPSUDNpTE	**XPSUSpTE**	**XPSUATpTE**

Product reference index

D

DE9RA1012 38 81
DE9RA1016 81
DE9RA2012 73
DE9RP13520 73

X

XCSA502 50
XCSA512 50
XCSA522 50
XCSA702 50
XCSA712 50
XCSA722 50
XCSA802 50
XCSB502 50
XCSB702 50
XCSB802 50
XCSC502 50
XCSC702 50
XCSC802 50
XCSD3702G13 33
XCSD3702N12 33
XCSD3702P20 33
XCSD3710G13 33
XCSD3710N12 33
XCSD3710P20 33
XCSD3718G13 33
XCSD3718N12 33
XCSD3718P20 33
XCSD3719G13 33
XCSD3719N12 33
XCSD3719P20 33
XCSD3902G13 32
XCSD3902N12 32
XCSD3902P20 32
XCSD3910G13 32
XCSD3910N12 32
XCSD3910P20 32
XCSD3918G13 32
XCSD3918N12 32
XCSD3918P20 32
XCSD3919G13 32
XCSD3919N12 32
XCSD3919P20 32
XCSDMC590L01M8 109
XCSDMC591L01M8 109
XCSDMC790L01M8 109
XCSDMC791L01M8 109
XCSDMC5902 108
XCSDMC5912 108
XCSDMC7902 108
XCSDMC7912 108
XCSDMP500L01M12 109
XCSDMP501L01M12 109
XCSDMP590L01M12 109
XCSDMP591L01M12 109
XCSDMP700L01M12 109
XCSDMP701L01M12 109
XCSDMP790L01M12 109
XCSDMP791L01M12 109
XCSDMP5002 108
XCSDMP5012 108
XCSDMP5902 108
XCSDMP5912 108
XCSDMP7002 108
XCSDMP7012 108
XCSDMP7902 108
XCSDMR590L01M12 109
XCSDMR591L01M12 109
XCSDMR790L01M12 109
XCSDMR791L01M12 109
XCSDMR5902 108
XCSDMR5912 108
XCSDMR7902 108
XCSDMR7912 108
XCSE5312 72
XCSE5322 72
XCSE5332 72
XCSE5342 72
XCSE7312 72
XCSE7332 72
XCSE7342 72
XCSE8312 72
XCSE73127 72
XCSE83127 72
XCSLE353531M3 63
XCSLE373731M3 63
XCSLE2525312 62
XCSLE2727312 62
XCSLE3535312 62
XCSLE3737312 62
XCSLE3838312 62
XCSLF353531M3 59
XCSLF353541M3 61
XCSLF373731M3 59
XCSLF373741M3 61
XCSLF383831M3 59
XCSLF2525312 58
XCSLF2725312 58
XCSLF2727312 58
XCSLF3535312 58
XCSLF3535412 60
XCSLF3737312 58
XCSLF3737412 60
XCSLF3838312 58
XCSM3702L1 28
XCSM3710L1 28
XCSM3715L1 28
XCSM3716L1 28
XCSM3902L1 28
XCSM3910L1 28
XCSM3915L1 28
XCSM3916L1 28
XCSM4102L1 28
XCSM4110L1 28
XCSM4115L1 28
XCSM4116L1 28
XCSMP59L2 42
XCSMP59L5 42
XCSMP59L10 42
XCSMP70L2 42
XCSMP70L5 42
XCSMP70L10 42
XCSMP79L2 42
XCSMP79L5 42
XCSMP79L10 42
XCSMP80L2 42
XCSMP80L5 42
XCSMP80L10 42
XCSP3902G13 34
XCSP3902N12 34
XCSP3902P20 34
XCSP3910G13 34
XCSP3910N12 34
XCSP3910P20 34
XCSP3918G13 34
XCSP3918N12 34
XCSP3918P20 34
XCSP3919G13 34
XCSP3919N12 34
XCSP3919P20 34
XCSPA192 46
XCSPA292 46
XCSPA492 46
XCSPA592 46
XCSPA692 46
XCSPA792 46
XCSPA892 46
XCSPA992 46
XCSPL552 38
XCSPL562 38
XCSPL572 38
XCSPL582 38
XCSPL592 38
XCSPL752 38
XCSPL762 38
XCSPL772 38
XCSPL782 38
XCSPL792 38
XCSPL862 38
XCSPL962 38
XCSPR552 38
XCSPR752 38
XCSPR952 38
XCSRC10M12 90
XCSRC11AM12 88
XCSRC11MM12 88
XCSRC12M12 89
XCSRC30M12 90
XCSRC31AM12 88
XCSRC31MM12 88
XCSRC32M12 89
XCSRD210MDB 91
XCSRK1BL 102
XCSRK1BU 102
XCSRK2A3 91
XCSRM10L01M12 100
XCSRM10L02 100
XCSRM10L05 100
XCSRM10L10 100
XCSRM10M12 100
XCSRM13L01M12 101
XCSRM13M12 101
XCSRM30L01M12 100
XCSRM30L02 100
XCSRM30L05 100
XCSRM30L10 100
XCSRM30M12 100
XCSRML0L01M12 100
XCSRML0L02 100
XCSRML0L05 100
XCSRML0L10 100
XCSRML0M12 100
XCSRML3L01M12 101
XCSRML3M12 101
XCSRMU3L01M12 101
XCSRMU3M12 101
XCSRZE 91
XCSRZSRC1 91
XCSRZSTK1 91 102
XCSRZY1 102
XCSRZY2 102
XCSTA592 46
XCSTA792 46
XCSTA892 46
XCSTE5312 80
XCSTE5332 80
XCSTE5342 80
XCSTE6312 80
XCSTE7312 80
XCSTE7342 80
XCSTR552 38
XCSTR752 38
XCSTR852 38
XCSZ01 50 64 73
XCSZ02 50 64 73
XCSZ03 50 64 73
XCSZ05 50 64 73
XCSZ11 47 81
XCSZ12 47 81
XCSZ13 47 81
XCSZ14 47 81
XCSZ15 47 81
XCSZ21 47
XCSZ25 51 64 73
XCSZ27 51 73
XCSZ28 46 81
XCSZ29 42
XCSZ30 64
XCSZ31 51
XCSZ32 51
XCSZ71 91
XCSZ72 91
XCSZ81 42
XCSZ83 42
XCSZ84 42
XCSZ85 42
XCSZ90 51 64 73
XCSZ91 46 81
XCSZ100 64 81
XCSZ200 46 81
XCSZ210 64
XCSZ211 64
XCSZC1 110
XCSZCR 110
XCSZP1 110
XCSZR1 110
XSZB130 110
XZCC12FCM50B 102
XZCC12FCM80B 102
XZCC12FDM50B 102
XZCC12FDM80B 102
XZCC23FCM190S 65
XZCC23FDM190S 65
XZCP11V12L2 92 102
XZCP11V12L5 92 102
XZCP11V12L10 92 102
XZCP11V12L20 92 102
XZCP12V12L2 92 102
XZCP12V12L5 92 102
XZCP12V12L10 92 102
XZCP12V12L20 92 102
XZCP29P11L2 110
XZCP29P11L5 110
XZCP29P11L10 110
XZCP29P12L2 92 102
XZCP29P12L5 92 102
XZCP29P12L10 92 102
XZCP29P12L20 92 102
XZCP53P12L2 92 102
XZCP53P12L5 92 102
XZCP53P12L10 92 102
XZCP53P12L20 92 102
XZCP0941L2 110
XZCP0941L5 110
XZCP0941L10 110
XZCP1041L2 110
XZCP1041L5 110
XZCP1041L10 110
XZCP1141L2 110
XZCP1141L5 110
XZCP1141L10 110
XZCP1241L2 110
XZCP1241L5 110
XZCP1241L10 110
XZCR2829P11D2 102
XZCR2829P11D5 102

YAGEO 1179 Mecanique Sensors

XZCR2829P11D10	*102*
XZCR2829P11D20	*102*
XZCR1111064D03	*92*
XZCR1111064D3	*92*
XZCR1111064D5	*92*
XZCR1111064D10	*92*
XZCR1111064D25	*92*
XZCR1511064D1	*102*
XZCR1511064D2	*102*
XZCR1511064D5	*102*
XZCR1511064D10	*102*

www.telemecaniquesensors.com

The information provided in this catalogue contains description of products sold by TMSS France, its subsidiaries and other anjliated companies (‘Offer’) with technical specifications and technical characteristics of the performance of the corresponding Offer.

The content of this document is subject to revision at any time without notice due to continued progress in methodology, design and manufacturing.

To the extent permitted by applicable law, no responsibility or liability is assumed by TMSS France, its subsidiaries and other anjliated companies for any type of damage arising out of or in connexion with (a) informational content of this catalogue not conforming with or exceeding the technical specifications, or (b) any error contained in this catalogue, or (c) any use, decision, act or omission made or taken on the basis of or in reliance on any information contained or referred to in this catalogue.

NEITHER TMSS FRANCE, ITS SUBSIDIARIES, NOR ITS OTHER AFFILIATES, AS THE CASE MAYBE, MAKE NO WARRANTY OR REPRESENTATION OF ANY KIND, WHETHER EXPRESS OR IMPLIED, AS TO WHETHER THIS CATALOGUE OR ANY INFORMATION CONTAINED THEREIN SUCH AS PRODUCTS WILL MEET REQUIREMENTS, EXPECTATIONS OR PURPOSE OF ANY PERSON MAKING USE THEREOF.

Telemecanique™ Sensors is a trademark of Schneider Electric Industries SAS used under license by TMSS France. Any other brands or trademarks referred to in this catalogue are property of TMSS France or, as the case may be, of its subsidiaries or other anjliated companies. All other brands are trademarks of their respective owners. This catalogue and its content are protected under applicable copyright laws and provided for informative use only.
No part of this catalogue may be reproduced or transmitted in any form or by any means (electronic, mechanical, photocopying, recording, or otherwise), for any purpose, without the prior written permission of TMSS France. Copyright, intellectual, and all other proprietary rights in the content of this catalogue (including but not limited to audio, video, text, and photographs) rests with TMSS France, its subsidiaries, and other anjliated companies or its licensors. All rights in such content not expressly granted herein are reserved. No rights of any kind are licensed or assigned or shall otherwise pass to persons accessing this information.

As standards, specifications and design change from time to time, please ask for confirmation of the information given in this publication.

©2024, TMSS France, All Rights Reserved.

TMSS France SAS
Share capital: 366 931 214 €
Tour Eqho, 2 avenue Gambetta
92400 Courbevoie – France
908 125 255 RCS Nanterre

October 2024 - V2.0

TESEBRO000050EN

Fişă tehnică: E-DEMI - Detector efracţie montaj interior.

Nr. crt.	Specificațiile tehnice ofertate	Producător - Denumire
0	1	3
1.	**Parametrii tehnici şi funcţionali:** — Material carcasă: ABS plastic UV stabilizat sau metalic; — Cu contact magnetic; — Montaj interior; — Sistem adresabil; — Grad de protecţie minim IP20; — Temperatura de lucru: -0°C..+40°C; — Conexiune electrică: terminale cu șurub; — Distanța detecție: maxim 20 mm; — Contact de alarmă: NC/NO, maxim 0,5A; — Compatibil cu centrala de efracție.	**PARADOX ZC1**
2.	**Specificații de performanță şi condiții privind siguranța în exploatare:** — Monitorizarea pătrunderii persoanelor străine la intrarea prin efracţie şi declanşare contact releu REED; — Adresabil compatibil cu centrala de efracție.	
3.	**Condiții privind conformitatea cu standarde relevante:** – EN 60529 grade de protecție;	
4.	**Condiții de garanție şi postgaranție:** — Producătorul va garanta calitatea și buna funcționare a produsului timp de 24 luni de la punerea în funcțiune sau de 36 luni de la data livrării; — Produsul va corespunde normelor tehnice şi standardelor europene.	
5.	**Condiții cu caracter tehnic:**. — Vor fi anexate: ▪ instrucțiuni de montaj (scheme de conectare, broșuri, cataloage); ▪ instrucțiuni de exploatare; ▪ buletine de încercări, verificări, probe; ▪ declarație de conformitate.	

PROIECTANT,

CIS GAZ S.A. - ROMÂNIA
CIS GAZ
RO1210493 J19910008382

ZC1-TI01

DIGIPLEX EVO

ZC1 Door Contact Module

V2.0

Instructions / Instrucciones

PARADOX

PARADOX.COM

Printed in Canada - 04/2013

English

The ZC1 is used to protect doors and windows. Typically, a magnet (included) is mounted on a door or window and the contact switch is mounted on the door frame or windowsill (see Figure 1). An open zone signal is sent through the combus to the control panel when the magnet moves away from the reed switch (included). When the magnet returns to its position close to the reed switch, a zone restore signal is sent. The distance between the magnet and the reed switch is determined by the magnet's specifications.

Once it is connected to the network, assign the ZC1 to a zone in the control panel as described in Zone Programming (refer to the appropriate control panel *Reference & Installation Manual*).

Specifications

On-board Tamper Switch:	Yes
Voltage Input:	9 to 16 VDC
Current Consumption:	14.2mA typical
Operating Temperature:	0°C to 50°C (32°F to 122°F)
Number of Zones:	1 standard zone
Power-up Indication:	Green LED illuminates
Proper Operation:	Red LED flashes
Locate Indication:	Green LED flashes
Bus Fault Indication:	Green and red LEDs flash alternately
Compatibility:	All Digiplex and Digiplex EVO control panels
Reed Switch:	Form A, (SPST) reed switch
Dimensions:	73.7mm L x 20.3mm H x 30.5mm W 2.9” L x 0.8” H x 1.2” W

Warranty

For complete warranty information on this product please refer to the Limited Warranty Statement found on the website www.paradox.com/terms. Your use of the Paradox product signifies your acceptance of all warranty terms and conditions.

Digiplex is a trademark or registered trademark of Paradox Ltd. or its affiliates in Canada, the United States and/or other countries. For the latest information on products approvals, such as UL and CE, please visit www.paradox.com.

© 2013 Paradox Ltd. All rights reserved. Specifications may change without prior notice. One or more of the following US patents may apply: 7046142, 6215399, 6111256, 6104319, 5920259, 5886632, 5721542, 5287111, and RE39406 and other pending patents may apply. Canadian and international patents may also apply.

Español

El ZC1 se usa para proteger puertas y ventanas. Habitualmente, un imán (no incluido) es montado sobre una puerta o ventana y el conmutador de contacto es ubicado en el marco de la puerta o alféizar de la ventana (ver la Figura 1). Una señal de zona abierta es enviada vía el combus a la central cuando el imán se aleja del interruptor de lámina (incluido). Cuando el imán regresa a su posición cerca del interruptor de lámina, se envía una señal de zona restaurada. La distancia entre el imán y el interruptor de lámina es determinada según las especificaciones del imán. Una vez conectado a la red, asigne el ZC1 a una zona de la central como se explica en la Programación de Zonas (consulte el apropiado *Manual de Instalación y Consulta* de la central).

Especificaciones

Interr. Sabotaje En Placa:	Si
Entrada de Voltaje:	9 a 16 VCC
Consumo de Corriente:	14.2mA típico
Temp. Funcionamiento:	0°C a 50°C (32°F a 122°F)
Número de Zonas:	1 zona estándar
Indicador de CA:	LED verde se enciende
Funcionamiento Normal:	LED rojo parpadea
Indicador de Ubicación:	LED verde parpadea
Indicador Fallo de Bus:	LEDs verde y rojo parpadean alternadamente
Compatibilidad:	Todas las centrales Digiplex y Digiplex Evo
Interruptor de Lámina:	Interruptor de lámina Forma A, (SPST)
Dimensiones:	73.7mm Largo x 20.3mm Alto x 30.5mm Ancho (2.9” x 0.8” x 1.2”)

Garantía

Para una información detallada acerca de la garantía de este producto consultar la Declaración de Garantía Limitada (en inglés) que se encuentra en el sitio web de paradox: www.paradox.ca/terms. El uso de este producto Paradox significa la aceptación de todos los términos y condiciones de la garantía.

Digiplex es una marca de comercio o marca registrada de Paradox Ltd. o de sus afiliados en Canadá, Estados Unidos y/o otros países. Para información de último minuto respecto a la homologación de productos, como UL y CE, sírvase visitar nuestro sitio Web en www.paradox.com.

© 2013 Paradox Ltd. Todos los derechos reservados. Las especificaciones pueden cambiar sin previo aviso. Una o más de las siguientes patentes EE.UU. podría aplicarse: 7046142, 6215399, 6111256, 6104319, 5920259, 5886632, 5721542, 5287111 y RE39406 y otras patentes pendientes podrían aplicarse. Patentes canadienses e internacionales también podrían aplicarse.

Français

Le ZC1 est utilisé pour protéger des portes et des fenêtres. Généralement, un aimant (compris) est installé sur une porte ou une fenêtre et le commutateur magnétique est installé sur le cadre de la porte ou sur l'appui de la fenêtre (voir Figure 1). Lorsque l'aimant s'éloigne du commutateur à lames (compris), un signal d'ouverture de zone est envoyé au panneau de contrôle par le biais du combus. Lorsque l'aimant revient près du commutateur à lames, un signal de rétablissement de zone est envoyé. La distance entre l'aimant et le commutateur à lames est déterminée par les spécifications de l'aimant.

Une fois branché au réseau, le ZC1 doit être assigné à une zone du panneau de contrôle tel que décrit à la section *Programmation des zones* (se référer au *Manuel d'installation et de référence* du panneau de contrôle approprié).

Spécifications

Interrupt. de sécurité intégré :	oui
Tension d'entrée :	9 à 16 Vc.c.
Consommation de courant :	typiquement 14,2 mA
Tempér. de fonctionnement :	0 °C à 50 °C (32 °F à 122 °F)
Nombre de zone(s) :	1 zone standard
Indication de sous tension:	DEL verte allumée
Fonctionnement normal :	DEL rouge clignote
Indication de localisation :	DEL verte clignote
Indication de défaut du bus :	DEL verte et rouge clignotent alternat.
Compatibilité :	tout les panneaux de contrôle Digiplex et Digiplex EVO
Commutateur à lames :	forme A, commutateur à lames (unipolaire unidirectionnel)
Dimensions :	73,7 mm L x 20,3 mm H x 30,5 mm La 2,9 po L x 0,8 po H x 1,2 po La

Garantie

Pour tous les renseignements sur la garantie de ce produit, se référer aux Déclarations sur les garanties restreintes qui se trouvent sur notre site Web au www.paradox.com/terms. L'utilisation de ce produit Paradox signifie l'acceptation de toutes les modalités et conditions de la garantie.

Digiplex est une marque de commerce ou une marque de commerce déposée de Paradox Ltée ou de ses affiliés au Canada, aux États-Unis et/ou dans d'autres pays. Pour les renseignements les plus récents concernant l'approbation des produits telle que UL et CE, veuillez visiter le www.paradox.com.

© Paradox Ltée, 2013. Tous droits réservés. Spécifications sujettes à changement sans préavis. Un ou plusieurs des brevets américains suivants peuvent s'appliquer : 7046142, 6215399, 6111256, 6104319, 5920259, 5886632, 5721542, 5287111 et RE39406 et d'autres brevets en instance peuvent également s'appliquer. Des brevets canadiens et internationaux peuvent aussi s'appliquer.

Figure/Figura 1

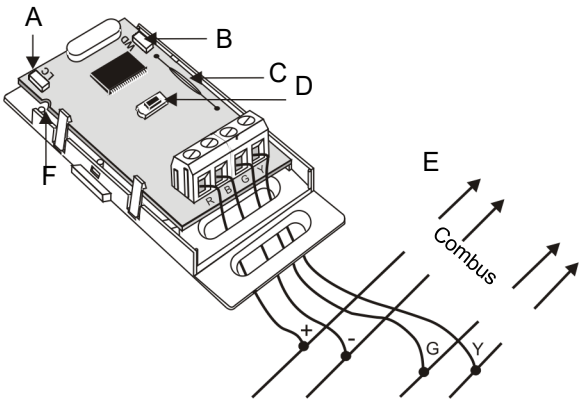

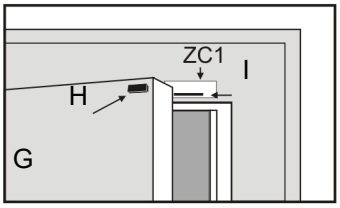

A
- **Green "LC" LED:**
  Power Up: on
  Locate: fast flash
- **LED verde "LC" :**
  Alimentación CA: Encendido
  Ubicación: parpadeo rápido
- **DEL verte « LC » :**
  mise sous tension : allumée
  localisation : clignote rapidement

B
- **Red "WD" LED:**
  Normal Operation: flash
- **LED rojo "WD":**
  Funcionamiento Normal: parpadea
- **DEL rouge « WD » :**
  fonctionnement normal : clignote

C
- reed switch
- interruptor de lámina
- commutateur à lames

D
- anti-tamper switch
- interruptor antisabotaje
- interrupteur de sécurité

E
- Control Panel
- Central
- panneau de contrôle

F
- Align PCB notch with plastic enclosure
- Alinear la ranura de la PCI con la caja de protección plástica
- Alignez l'encoche de la carte de circuits imprimés avec le couvercle arrière.

G
- door
- puerta
- porte

H
- magnet
- imán
- aimant

I
- reed
- interuptor de lámina
- lame

- Refer to the appropriate control panel *Reference & Installation Manual* for maximum allowable installation distance from the control panel.
- Remove AC and battery power from control panel before adding the ZC1 to the system
- If both the "LC" and "WD" LEDs are flashing alternately, a communication failure between the control panel and the module is occuring.

- Consulte el *Manual de Instalación y Consulta* adecuado para información sobre la máxima distancia permitida de la central.
- Quite la alimentación CA y la batería de la central antes de añadir el ZC1 al sistema.
- Si los LEDs "LC" y "WD" parpadean alternadamente, está ocurriendo una fallo de comunicación entre la central y el módulo.

- Se référer au *Manuel d'installation et de référence* du panneau de contrôle approprié pour la distance maximale permise entre le module et le panneau de contrôle.
- Retirer les alimentations en c.a. et par batterie du panneau de contrôle avant d'ajouter le ZC1 au système.
- Si les DEL « LC » et « WD » clignotent alternativement, c'est qu'il y a une défaillance de la communication entre le panneau de contrôle et le module.

Fişă tehnică: E-DES-4P - Descărcător cu 4 poli cu întreruptor încorporat.

Nr. crt.	Specificațiile tehnice ofertate	Producător - Denumire
0	1	2
1.	**Parametrii tehnici şi funcţionali: 1.Descărcător cu 4 poli:** — Număr poli: 4 (3P+N); — Protecție tip 2; — Posibilitate de înlocuire a cartușelor defecte; — Indicare vizuală a cartușelor defecte; — Tensiune nominală: 400V; 50Hz-AC; — Curent nominal de descărcare In : 20 kA; — Curent de scurtcircuit In: 25 kA — Montaj: cu cleme pe şină DIN 35mm; Domeniu de temperatură: **-25°C**...**60°C** — Conexiune electrică: terminale cu şurub; — Contact de semnalizare a poziției de defect; **2.Întreruptor cu 4 poli asociat:** — Număr poli: 4 (3P+N); — Tensiune nominală: 380...415Vca 50Hz; — Curent nominal In=25A la 40^{0}C; — Tip declanșare: termo-magnetic; — Cod curbă: C; — Limită de declanșare magnetică: 8xIn; — Montaj cu cleme pe șină DIN	**Schneider - A9L16294**
2.	**Specificații de performanță şi condiții privind siguranța în exploatare:** – Protecția terminalelor la atingere cu mâna.	
3.	**Condiții privind conformitatea cu standarde relevante:** – EN 61643-11 — EN 60529	
4.	**Condiții de garanție şi postgaranție:** — Producătorul va garanta calitatea și buna funcționare a produsului timp de 24 luni de la punerea în funcțiune sau de 36 luni de la data livrării. — Produsul va corespunde normelor tehnice şi standardelor europene.	
5.	**Condiții cu caracter tehnic:** — Vor fi anexate: ▪ instrucțiuni de montaj (scheme de conectare, broșuri, cataloage); ▪ instrucțiuni de exploatare; ▪ buletine de încercări, verificări, probe; ▪ declarație de conformitate.	

PROIECTANT,

CIS GAZ S.A. - ROMÂNIA
CIS GAZ
RO12210493 J19910008382

Product datasheet

Specifications

iQuick PRD40r modular surge arrester - 3 poles + N - 350V - with remote transfer

A9L16294

Main

Range of product	IQuick PRD
range of product	Acti9
product name	Acti9 iQuick PRD
Product or component type	Surge arrester with pluggable cartridge
Device short name	iQuick PRD40r
Device application	Distribution
Standards	EN 61643-11:2012 IEC 61643-11:2011
Product certifications	CE
Quality labels	KEMA-KEUR NF
Poles description	3P + N
Remote signalling	With
Signal contacts composition	1 SD (1 C/O)
Surge arrester type	Electrical distribution network
Earthing system	TN-S TT

Complementary

Surge arrester class type	Type 2
Surge arrester technology	MOV + GDT
[Ue] rated operational voltage	230/400 V AC (+/- 10 %) at 50/60 Hz
Nominal discharge current	Common mode: 20 kA (L/PE) Common mode: 20 kA (N/PE) Differential mode: 20 kA (L/N)
Maximum discharge current	Common mode: 40 kA L/PE Common mode: 40 kA N/PE Differential mode: 40 kA L/N
[Uc] maximum continuous operating voltage	Common mode: 264 V N/PE Common mode: 350 V L/PE Differential mode: 350 V L/N
Maximum [Up] voltage protection level	Common mode <1.5 kV type 2 L/PE Common mode <1.5 kV type 2 N/PE Differential mode <2.5 kV type 2 L/N
Disconnector device type	Integrated circuit breaker - Icu 20 kA
Signalling circuit voltage	2 A/250 V AC 50/60 Hz
Mounting mode	Clip-on (DIN rail)

Disclaimer: This documentation is not intended as a substitute for and is not to be used for determining suitability or reliability of these products for specific user applications

9 mm pitches	14.7
Height	94 mm
Width	131.5 mm
Depth	75.9 mm
Net weight	0.86 kg
Colour	White (RAL 9003)
Connections - terminals	Tunnel type terminal (upside) 2.5…35 mm² Tunnel type terminal (downside) 2.5…25 mm²
Tightening torque	2.5 N.m
Compatibility code	IQuick PRD40r

Environment

IK degree of protection	IK05 conforming to IEC 62262
Relative humidity	5…95 %
Operating altitude	2000 m
ambient air temperature for operation	-25…60 °C
Ambient air temperature for storage	-40…70 °C

Packing Units

Unit Type of Package 1	PCE
Number of Units in Package 1	1
Package 1 Height	9.500 cm
Package 1 Width	11.000 cm
Package 1 Length	15.500 cm
Package 1 Weight	891.000 g
Unit Type of Package 2	S03
Number of Units in Package 2	12
Package 2 Height	30.000 cm
Package 2 Width	30.000 cm
Package 2 Length	40.000 cm
Package 2 Weight	11.180 kg

Contractual warranty

Warranty	18 months

Environmental Data

Schneider Electric aims to achieve Net Zero status by 2050 through supply chain partnerships, lower impact materials, and circularity via our ongoing “Use Better, Use Longer, Use Again” campaign to extend product lifetimes and recyclability.

Environmental Data explained

How we assess product sustainability

Environmental footprint

Carbon footprint (kg.eq.CO2 per CR, Total Life cycle)	8
Environmental Disclosure	Product Environmental Profile

Use Better

Materials and Substances

Minimum percentage of recycled plastic content	9
Packaging made with recycled cardboard	No
Packaging without single use plastic	No
EU RoHS Directive	Compliant
SCIP Number	A3e675c6-58d9-493e-807c-a277ebc5d03f
REACh Regulation	REACh Declaration

Use Again

Repack and remanufacture

Circularity Profile	End of Life Information
Take-back	No
WEEE	The product must be disposed on European Union markets following specific waste collection and never end up in rubbish bins

Fișă tehnică: E-DFT - Detector multicriterial fum și temperatură.

Nr. crt.	Specificațiile tehnice ofertate	Producător - Denumire
0	1	2
1.	**Parametrii tehnici şi funcţionali:** — Material carcasă ABS plastic UV stabilizat; — Grad de protecție minim IP21; — Temperatura de lucru: 0°C...+40°C; — Umiditate relativă: 20-90% (fără condens); — Curent absorbit stand-by: maxim 5mA; — Curent absorbit alarmă: maxim 100 mA — Conexiune electrică: terminale cu şurub; — Sistem adresabil; — Compatibil cu centrala de incendiu.	**ENEA ID300**
2.	**Specificații de performanță și condiții privind siguranța în exploatare:** — Detectează fumul vizibil produs de materiale care ard încet sau mocnit (exemplu mobilier, plastic, fum produs de PVC supraîncălzit dar nears); — Dual simultan fum și temperatură; — Pragul de temperatură va fi reglabil.	
3.	**Condiții privind conformitatea cu standarde relevante:** – Conform standarde în vigoare EN 54, EN 60529.	
4.	**Condiții de garanție şi postgaranție:** — Producătorul va garanta calitatea și buna funcționare a produsului timp de 24 luni de la punerea în funcțiune sau de 36 luni de la data livrării; — Produsul va corespunde normelor tehnice şi standardelor europene.	
5.	**Condiții cu caracter tehnic:** — Vor fi anexate: ▪ instrucțiuni de montaj (scheme de conectare, broșuri, cataloage); ▪ instrucțiuni de exploatare; ▪ buletine de încercări, verificări, probe; ▪ declarație de conformitate.	

PROIECTANT,

CIS GAZ S.A. - ROMÂNIA
CIS GAZ
RO1210493 J19910008326

991c/01
991e/01
991a/01

Iris

Rivelatori d'incendio convenzionali

ID100 - rivelatore ottico di fumo
ID200 - rivelatore di temperatura
ID300 - rivelatore combinato

0832
0832-CPR-F1152
0832-CPR-F1243
0832-CPR-F1153

ATTENZIONE!

Per dettagli sul posizionamento, area di copertura, e modalità di installazione fare riferimento alla normativa vigente in materia di impianti automatici di rivelazione incendio. I rivelatori della serie Iris sono certificati secondo le norme EN54-7: Rivelatori di fumo - Rilevatori puntiformi funzionanti secondo il principio della diffusione della luce, della trasmissione della luce o della ionizzazione (per i soli modelli ID100 e ID300) ed EN54-5: Rivelatori di Calore - rivelatori puntiformi (per i soli modelli ID200 e ID300).

Descrizione generale

I rivelatori della serie Iris sono in grado di rilevare la presenza di alcuni prodotti della combustione e quindi l'insorgere di focolai di incendio.

I parametri di funzionamento dei rivelatori possono essere modificati ed adeguati alle condizioni ambientali per mezzo del dispositivo EITK-DRV fornito da INIM Electronics; attraverso questo dispositivo è possibile programmare i rivelatori e valutarne la contaminazione ed il funzionamento. Per ulteriori dettagli si veda il paragrafo "Utilizzo del driver EITK-DRV".

Il rivelatore, che in condizioni di stand-by ha un basso assorbimento, 80μA, in caso di allarme aumenta la corrente assorbita fino ad un massimo di 40mA, segnalando così il pericolo alla centrale di controllo.

INIM Electronics mette a disposizione tre modelli di rivelatori convenzionali della serie Iris che possono essere riconosciuti per mezzo dell'etichetta dati di targa apposta sul retro. Questa etichetta riporta il numero seriale univoco che identifica il dispositivo.

ID100

Rivelatore ottico dotato di una camera di campionamento basata sull'effetto della diffusione della luce (effetto Tyndall); per garantirne l'efficacia non devono esistere ostacoli all'ingresso dell'aria all'interno della camera di campionamento e il rivelatore non deve essere investito direttamente da correnti d'aria.

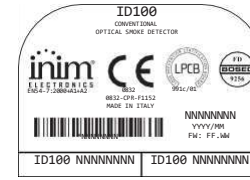

Il rivelatore segnala una condizione di allarme nel caso in cui il livello di fumo nell'ambiente raggiunga i seguenti valori:

- 0,08 dB/m (modalità impostabile per mezzo del EITK-DRV)
- 0,10 dB/m (modalità impostabile per mezzo del EITK-DRV)
- 0,12 dB/m (modalità pre-impostata)
- 0,15 dB/m (modalità impostabile per mezzo del EITK-DRV)

ID200

Rivelatore termico dotato di un elemento termosensibile in grado di valutare la temperatura dell'ambiente.

Le modalità di funzionamento, impostabili tramite EITK-DRV sono:

- "A1R" (pre-impostata); il rivelatore segnala una condizione di allarme nel caso in cui la temperatura ambientale superi i 58 °C o nel caso in cui la temperatura subisca variazioni anomale.
- "B"; il rivelatore segnala una condizione di allarme nel caso in cui la temperatura ambientale superi i 72°C.
- "A2S"; il rivelatore segnala una condizione di allarme nel caso in cui la temperatura ambientale superi i 58°C.
- "BR"; il rivelatore segnala una condizione di allarme nel caso in cui la temperatura ambientale superi i 72°C o nel caso in cui la stessa cresca troppo rapidamente.

ATTENZIONE!

Le modalità di funzionamento "A2S" e "BR" non sono certificate.

ID300

Rivelatore ottico-termico dotato sia della camera di campionamento ottica per la rivelazione del fumo sia dell'elemento termosensibile. La combinazione dei valori permette, a seconda della modalità di funzionamento selezionata tramite il dispositivo EITK-DRV, di ottenere un rivelatore più sensibile e quindi in grado di reagire con maggiore tempestività e di rilevare anche focolai caratterizzati da scarsa emissione di fumo, o di ottenere un rivelatore con una maggiore immunità ai falsi allarmi.

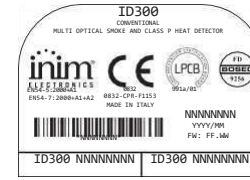

Le modalità di funzionamento, impostabili tramite EITK-DRV sono:

- "PLUS" (pre-impostata); il rivelatore segnala una condizione di allarme nel caso in cui venga superato il valore di soglia di fumo (impostabile come descritto per il modello ID100) o nel caso in cui venga superato il valore di temperatura (impostabile come descritto per il modello ID200). Inoltre nel caso di temperatura in crescita la sensibilità della camera di fumo viene aumentata. Questa modalità di funzionamento, caratterizzata da una elevata sensibilità, permette di rilevare anche quei focolai di incendio caratterizzati da una scarsa emissione di fumo e generazione di fiamme (es: combustione di alcool o combustibili equiparabili).
- "OR"; il rivelatore segnala una condizione di allarme nel caso in cui venga superato il valore di soglia di fumo (impostabile come descritto per il modello ID100) o nel caso in cui venga superato il valore di temperatura (impostabile come descritto per il modello ID200). Questa modalità di funzionamento, caratterizzata da una discreta sensibilità, permette di rilevare sia focolai di incendio con buona emissione di fumo e poco calore (focolai covanti) sia focolai con scarsa emissione di fumo ed alta generazione di calore (sostanze chimiche)
- "AND"; il rivelatore segnala una condizione di allarme solo nel caso in cui venga superato il valore di soglia di fumo (impostabile come descritto per il modello ID100) e nello stesso tempo venga superato il valore di temperatura (impostabile come descritto per il modello ID200). Questa modalità di funzionamento, caratterizzata da una bassa sensibilità, permette di ridurre l'incidenza di falsi allarme in quelle condizioni di impiego nelle quali una delle due grandezze fisiche (fumo o temperatura) potrebbero crescere anche in assenza di un rischio di incendio.

ATTENZIONE!

Data la bassa reattività valutare attentamente le condizioni ambientali prima di selezionare questa modalità di funzionamento.

- "FUMO"; Il rivelatore assume le stesse caratteristiche del rivelatore modello ID100
- "TEMPERATURA"; il rivelatore assume le stesse caratteristiche del rivelatore modello ID200

Specifiche tecniche	ID100	ID200	ID300
Tensione di alimentazione	10-30V⎓		
Corrente assorbita a riposo	90µA	70µA	90µA
Corrente assorbita in allarme	Max 40mA		
Corrente assorbita dall'uscita "R" (limitata internamente)	Max 14mA		
Temperatura di funzionamento	-5°C / +40°C		
Umidità (senza condensa)	95% RH		
Altezza (base standard inclusa)	46mm	54mm	
Diametro (base standard inclusa)	110mm		
Peso (base standard inclusa)	160g		
Peso (base standard esclusa)	91g		

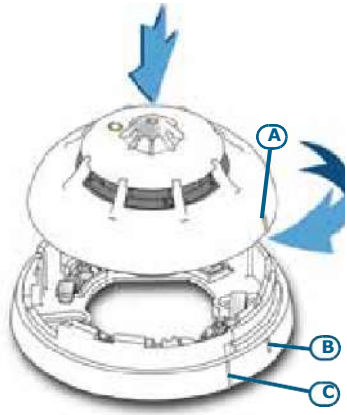

Installazione

ATTENZIONE!

I rivelatori vengono forniti con un coperchio protettivo che ne previene il danneggiamento a causa di urti accidentali e la contaminazione dovuta al pulviscolo presente nell'aria, tale protezione va rimossa soltanto nel momento in cui si procede all'avviamento del sistema.

I rivelatori della serie Iris vanno utilizzati con una delle seguenti basi di montaggio compatibili:

- **EB0010**; base di montaggio standard
  Un esempio di installazione su basi standard è riportata a fianco.

ATTENZIONE!

Il valore di resistenza di fine linea (EOL) dipende dal tipo di centrale.

- **EB0020**; base di montaggio con relè
  Da utilizzare per la connessione del rivelatore a sistemi antintrusione o a centrali con cablaggio a 4 fili. Per lo schema di collegamento fare riferimento alle istruzioni contenute nella base EB0020.

ATTENZIONE!

Le due etichette staccabili con il numero seriale vanno rimosse dal rivelatore e posizionate una sulla base di fissaggio ed una sulla piantina dell'impianto.

Una volta terminata l'installazione della base posizionare il rivelatore sopra la base, esercitando una leggera pressione ruotare in senso orario fino ad allineare la tacca [A] con la tacca [B] agganciando la base al rilevatore; con un'ulteriore breve rotazione si allinea la tacca [A] con la tacca [C], permettendo alle lamelle della base di agganciare i contatti del rivelatore.

Test e manutenzioni

In sede di avviamento o di controllo periodico del sistema utilizzare le indicazioni di seguito:

- **Controllo del lampeggio del LED**; qualora la frequenza di lampeggio sia di 5 secondi il rivelatore è in una condizione di guasto, quindi procedere con la pulizia della camera ottica e verificare se il problema scompare. In caso contrario procedere con la sostituzione del rivelatore (l'apparecchio EITK-DRV permette di individuare la causa del guasto).

1191

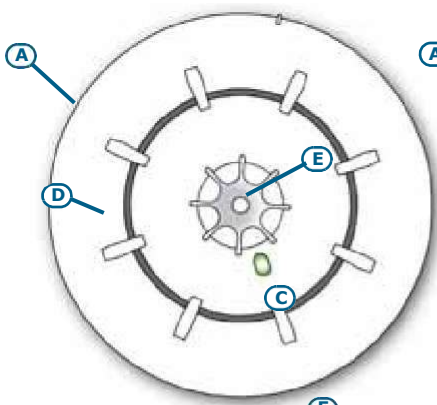

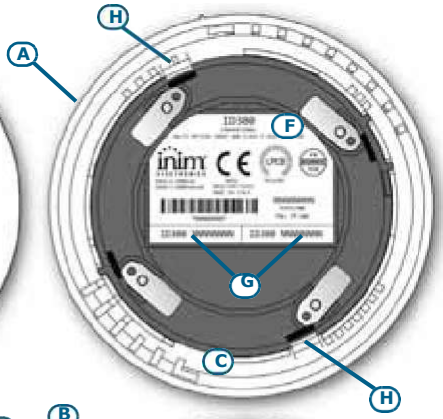

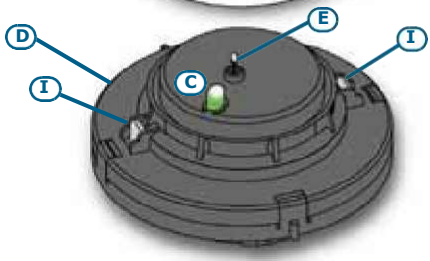

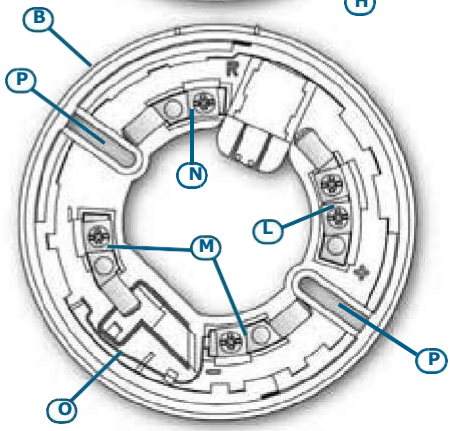

A	Rivelatore
B	Base
C	LED rosso/verde
D	Camera ottica
E	Sensore termico
F	Etichetta dati di targa
G	Etichette numero seriale rimuovibili

H	Ganci di smontaggio del coperchio
I	Ganci di smontaggio della camera ottica
L	Terminale "+"
M	Terminali "-"
N	Terminale "R"
O	Lamella per corto circuito
P	Fori d'ancoraggio

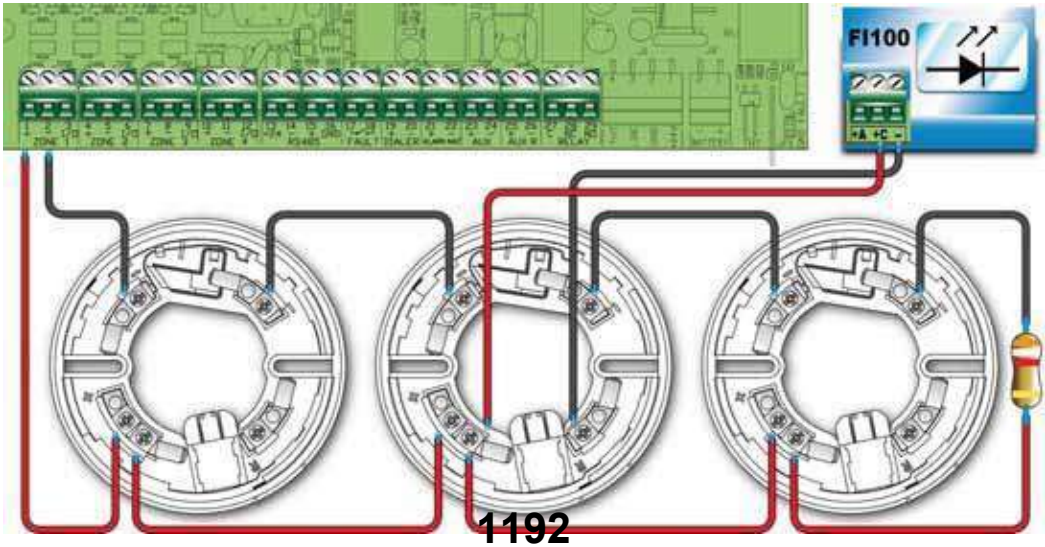

- **Test e manutenzione del sensore ottico**; il rivelatore di fumo va testato al termine dell'installazione e periodicamente in accordo alla normativa vigente. Per testare la rivelazione di fumo utilizzare aerosol spray adatti allo scopo e seguire le istruzioni allegate.
  Assicurarsi che gli ingressi della camera di campionamento non siano ostruiti. Se viene stimato un discreto accumulo di polvere all'interno della camera (per mezzo dell'apparecchio EITK-DRV è possibile leggerne il valore esatto) procedere all'apertura della camera di campionamento ed alla sua pulizia utilizzando un getto d'aria o un pennellino asciutto. Assicurarsi che tutta la polvere sia rimossa e verificare inoltre che la retina di protezione contro l'ingresso di insetti non sia ostruita.
- **Test e manutenzione sensore di temperatura**; utilizzare un idoneo apparecchio in grado di innalzare la temperatura nei pressi del rivelatore e seguire le istruzioni allegate. Ad ogni controllo periodico assicurarsi che l'elemento sensibile alla temperatura sia integro e non sia ostruito da polvere o vernice, nel caso procedere ad una pulizia con un getto d'aria o con un pennello asciutto.

Funzionamento

Il LED bicolore (visibile a 360°) riporta lo stato del rivelatore.

- Un lampeggio verde ogni 30 secondi: rivelatore correttamente in funzione.
- Un lampeggio verde ogni 5 secondi: rivelatore in condizione di guasto; maggiori dettagli sulla causa del guasto (contaminazione eccessiva nella camera ottica, guasto di una parte del rivelatore ecc.) possono essere ottenuti per mezzo dell'apparecchio EITK-DRV.
- Rosso acceso fisso: rivelatore in allarme.

I rivelatori sono dotati di una uscita, il terminale "R", per il collegamento di una spia di ripetizione di allarme; tale spia viene attivata quando il rivelatore entra nella condizione di allarme.

Utilizzo del driver EITK-DRV

Il driver EITK-DRV permette di modificare i parametri di funzionamento dei rivelatori, di valutarne lo stato di contaminazione, di eseguirne una diagnosi accurata. Il driver può essere utilizzato collegato alla porta USB di un PC sul quale sia in esecuzione il software fornito con l'apparecchio o in maniera autonoma grazie alla batteria contenuta al suo interno.

Ciascun rivelatore contiene una memoria dell'andamento delle grandezze fisiche (fumo e temperatura a seconda dei modelli) nei 5 minuti che hanno preceduto l'ultimo allarme, pertanto utilizzando il driver EITK-DRV è possibile collegarsi alla linea di rivelazione e per ciascun rivelatore ottenere un grafico con i dettagli dell'evoluzione del principio di incendio.

Per maggiori dettagli e per l'utilizzo del driver EITK-DRV si rimanda al manuale allegato.

Avvertenze e limitazioni

I rivelatori della serie Iris vanno utilizzati esclusivamente con centrali di controllo compatibili e conformi alla normativa vigente. Il rivelatore non è in grado di garantire il funzionamento se esistono delle barriere frapposte tra l'elemento sensibile ed il focolaio d'incendio (elementi sporgenti dal soffitto ecc.). Fare riferimento alla locale normativa vigente per la corretta installazione e manutenzione del sistema, una accurata valutazione del rischio di incendio deve essere fatta prima di scegliere il tipo di rivelatore ed il suo posizionamento.

Marcatura CE e certificazioni

DoP, EC DoC e certificati relativi a questo prodotto possono essere scaricati dal seguente link:
www.inim.biz/certifications

CE 0832

INIM Electronics s.r.l.
Via Fosso Antico snc - Fraz. Centobuchi
63076 Monteprandone (AP) - Italy
10
0832-CPR-F1152

EN 54-7:2000 + A1:2002 + A2:2006

ID100

Sensore di fumo ottico convenzionale per sistemi di rivelazione e di segnalazione d'incendio per edifici

Caratteristiche essenziali		Prestazione
Condizioni nominali di attivazione/sensibilità, ritardo di risposta (tempo di risposta) e prestazioni in condizioni di incendio		PASS
Affidabilità di funzionamento		PASS
Tolleranza al voltaggio di alimentazione		PASS
Durabilità dell'affidabilità di funzionamento:	Resistenza termica	PASS
	Resistenza alle vibrazioni	PASS
	Resistenza all'umidità	PASS
	Resistenza alla corrosione	PASS
	Stabilità elettrica	PASS

CE 0832

INIM Electronics s.r.l.
Via Fosso Antico snc - Fraz. Centobuchi
63076 Monteprandone (AP) - Italy
10
0832-CPR-F1243

EN 54-5:2000 + A1:2002

ID200

Sensore di temperatura classe P convenzionale per sistemi di rivelazione e di segnalazione d'incendio per edifici

Caratteristiche essenziali		Prestazione
Condizioni nominali di attivazione/sensibilità, ritardo di risposta (tempo di risposta) e prestazioni in condizioni di incendio		PASS
Affidabilità di funzionamento		PASS
Tolleranza al voltaggio di alimentazione		PASS
Durabilità dell'affidabilità di funzionamento:	Resistenza termica	PASS
	Resistenza alle vibrazioni	PASS
	Resistenza all'umidità	PASS
	Resistenza alla corrosione	PASS
	Stabilità elettrica	PASS

Classe del rivelatore (EN54-5): A1R o B

CE 0832

INIM Electronics s.r.l.
Via Fosso Antico snc - Fraz. Centobuchi
63076 Monteprandone (AP) - Italy
10
0832-CPR-F1153

EN 54-5:2000 + A1:2002
EN 54-7:2000 + A1:2002 + A2:2006

ID300

Sensore multicritero di fumo ottico e di temperatura classe P convenzionale per sistemi di rivelazione e di segnalazione d'incendio per edifici

Caratteristiche essenziali		Prestazione
Condizioni nominali di attivazione/sensibilità, ritardo di risposta (tempo di risposta) e prestazioni in condizioni di incendio		PASS
Affidabilità di funzionamento		PASS
Tolleranza al voltaggio di alimentazione		PASS
Durabilità dell'affidabilità di funzionamento:	Resistenza termica	PASS
	Resistenza alle vibrazioni	PASS
	Resistenza all'umidità	PASS
	Resistenza alla corrosione	PASS
	Stabilità elettrica	PASS

Classe del rivelatore (EN54-5): A1R o B

Le informazioni contenute nel presente foglio sono soggette a modifiche senza preavviso e non rappresentano un impegno da parte della INIM Electronics.

1193

INIM Electronics s.r.l.
via Fosso Antico, Centobuchi
63076, Monteprandone, (AP) Italy
Tel. +39 0735 70 50 07
Fax + 39 0735 70 49 12
www.inim.biz info@inim.biz

991c/01
991e/01
991a/01

Iris

Conventional fire detectors

ID100 - optical smoke detector
ID200 - temperature detector
ID300 - multicriteria detector

0832
0832-CPR-F1152
0832-CPR-F1243
0832-CPR-F1153

ATTENTION!

For information regarding device placement, coverage and method of installation, refer to the established standard regulations and codes relating to automatic fire-detection systems. Iris series detectors are compliant with EN54-7: Smoke detectors – Point detectors using the scattered light principle, light transmission or ionization (ID100 and ID300 models only) and EN54-5: Heat detectors – point detectors (for ID200 and ID300 models only).

Product description

Iris series detectors offer wide-spectrum detection of smoke particles generated by the majority of fires. They are suitable for most applications and provide first-rate early warning.

The EITK-DRV driver, supplied by INIM Electronics, allows you to change the operating parameters to suit specific environment conditions. This device permits easy programming and verification of contamination and performance. For further details, refer to "Using the EITK-DRV driver" section.

During standby status, these detectors have low current draw, 80µA. However, in the event of alarm the current draw increases to a maximum of 40mA thus signalling the condition to the control panel.

INIM Electronics offers three Iris series conventional fire-detectors, which can be identified by the technical specifications/serial number on the back of the detector.

ID100

Optical detector equipped with a reference chamber based on the scattered light principle (Tyndall effect). This detector must be installed in draught and obstacle free place which guarantees appropriate air-flow into the reference chamber.

The detector will trigger an alarm when the level of smoke inside the reference chamber reaches the following values:

- 0.08 dB/m (mode set via the EITK-DRV)
- 0.10 dB/m (mode set via the EITK-DRV)
- 0.12 dB/m (pre-set mode)
- 0.15 dB/m (mode set via the EITK-DRV)

ID200

Heat detector with heat-sensitive element capable of sensing the temperature within the protected environment.

The operating modes, programmable via the EITK-DRV are:

- "A1R" (pre-set); the detector signals alarm status when the temperature within the protected environment exceeds 58 °C or when the temperature undergoes anomalous changes.
- "B"; the detector signals alarm status when the temperature within the protected environment exceeds 72°C.
- "A2S"; the detector signals alarm status when the temperature within in the protected environment exceeds 58°C.
- "BR"; the detector signals alarm status when the temperature within the protected environment exceeds 72° or when it senses a rapid temperature rise.

ATTENTION!

The operating modes of the "A2S" and "BR" are not certified.

ID300

Optical-heat detector with heat sensitive element and optical smoke chamber. The combination of values provides (in accordance with the operating mode selected via the EITK-DRV driver) high immunity to nuisance alarms and an exceptionally sensitive detector which is capable of swift response to fires characterized by low smoke emission.

The operating modes, programmable via the EITK-DRV driver are:

- "PLUS" (pre-set); the detector signals alarm status when smoke in the protected environment exceeds the programmed threshold (programmed as described for the ID100 model) or when the temperature within the protected environment exceeds the

programmed threshold (programmed as described for the model ID200). Furthermore, in the event of a rise in temperature within the protected environment, the sensibility of the smoke chamber will be increased. This operating mode, characterized by high sensitivity, allows detection of fires which produce a large amount of flames but low smoke emission (e.g. combustion of alcohol or similar highly-inflammable products).

- "OR"; the detector signals alarm status when smoke in the protected environment exceeds the programmed threshold (programmed as described for the ID100 model) or when the temperature within the protected environment exceeds the programmed threshold (programmed as described for the ID200 model). This operating mode, characterized by a medium-high sensitivity, allows detection of fires which generate a substantial amount of smoke (slow burning fires) and also fires which generate high temperatures with low smoke emission (chemical products).
- "AND"; the detector signals alarm status when the smoke and temperature in the protected environment exceed the programmed thresholds simultaneously (programmed as described for the ID100 model and ID200 respectively). This operating mode, characterized by a low sensitivity, lowers the false alarm rate and is useful in applications where either the smoke or heat values in the protected environment may increase without the risk of fire.

Given the limited response, consider the conditions in the protected environment carefully before selecting this operating mode. ***ATTENTION!***

- "SMOKE"; the detector assumes the characteristics of the ID100 model
- "HEAT"; the detector assumes the characteristics of the ID200 model

Technical specifications	ID100	ID200	ID300
Power supply	10-30V⎓		
Average current draw in standby	90µA	70µA	90µA
Average current draw in alarm	Max 40mA		
Current draw by the "R" output (internally limited)	Max 14mA		
Operating temperature	-5°C / +40°C		
Humidity (without condensation)	95% RH		
Height (standard base included)	46mm	54mm	
Diameter (standard base included)	110mm		
Weight (standard base included)	160g		
Weight (without base)	91g		

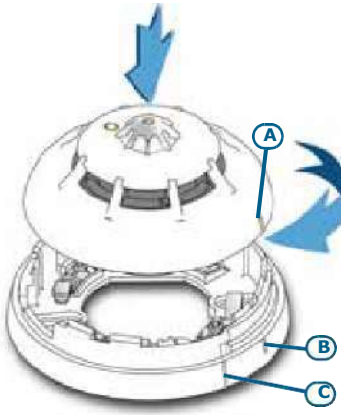

Installation

The detectors are supplied with protective covers which help to protect them against minor damage and dust contamination which may occur during the installation phase. The covers should not be removed until the system is ready to start up. ***ATTENTION!***

Iris series detectors should be used with one of the following compatible mounting bases:

- **EB0010**; standard base
  An example of installation using standard bases is shown opposite.

The value of the EOL resistance depends on the type of control panel in use. ***ATTENTION!***

- **EB0020**; relay base
  Appropriate when the detector is to be connected to an intrusion control panel or to a control panel using 4 wires. For the respective wiring instructions, refer to the leaflet supplied with the EB0020.

The two removable serial-number stickers should be taken off and one should be attached to the mounting base and the other to the installation layout. ***ATTENTION!***

Once the base is located properly in its placement, place the detector unit onto the base and, with minimum force, turn it clockwise until notch [A] aligns with notch [B] (in order to attach the detector to the base); turn it still further until notch [A] aligns with notch [C] (in order to allow the base to engage with the detector contacts).

Testing and maintenance

After installation and during periodic maintenance inspections, you must carry out the following operations on each detector:

- **Check the LED**; if the LED blinks at 5 second intervals, the detector is in fault status. This may be due to dust contamination. If after cleaning, this condition persists, remove the faulty detector and replace it with a new one. The EITK-DRV driver will assist you in finding the cause of faults.
- **Optical smoke detector test**; smoke detectors should be tested immediately after installation and periodically during maintenance inspections in accordance with the established standard regulations and codes in force. To test smoke detectors, use an approved test aerosol strictly in accordance with the accompanying instructions.
  Ensure that the smoke inlet ports to the smoke detection chamber are not blocked. Check the contamination level of the smoke detection chamber via the EITK-DRV. If the contamination level is high, detach the detector from its mounting base

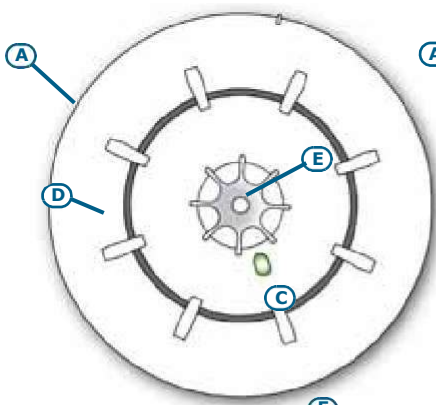

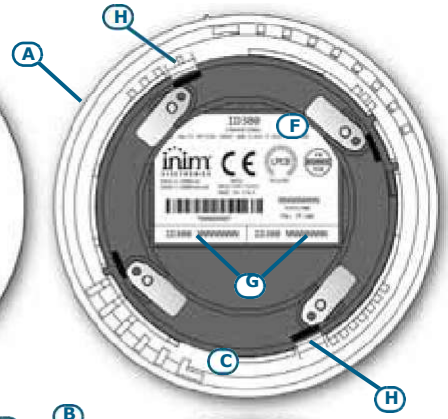

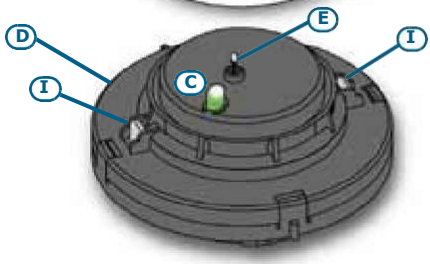

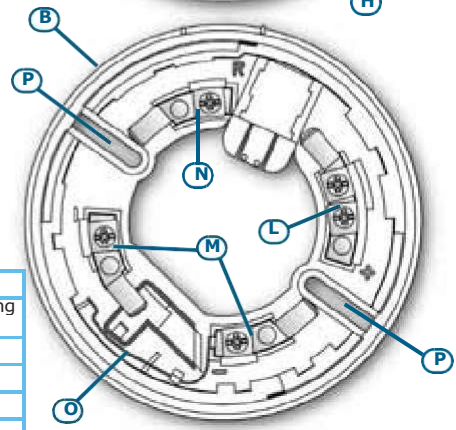

A	Detector	H	Cover removing hooks
B	Base	I	Optical chambre removing hooks
C	Red/green LED	L	"+" terminal
D	Optical chamber	M	"-" terminals
E	Thermal probe	N	"R" terminal
F	Identifier sticker	O	Short-circuit reed
G	Technical specifications/ serial-number sticker	P	Screw locations

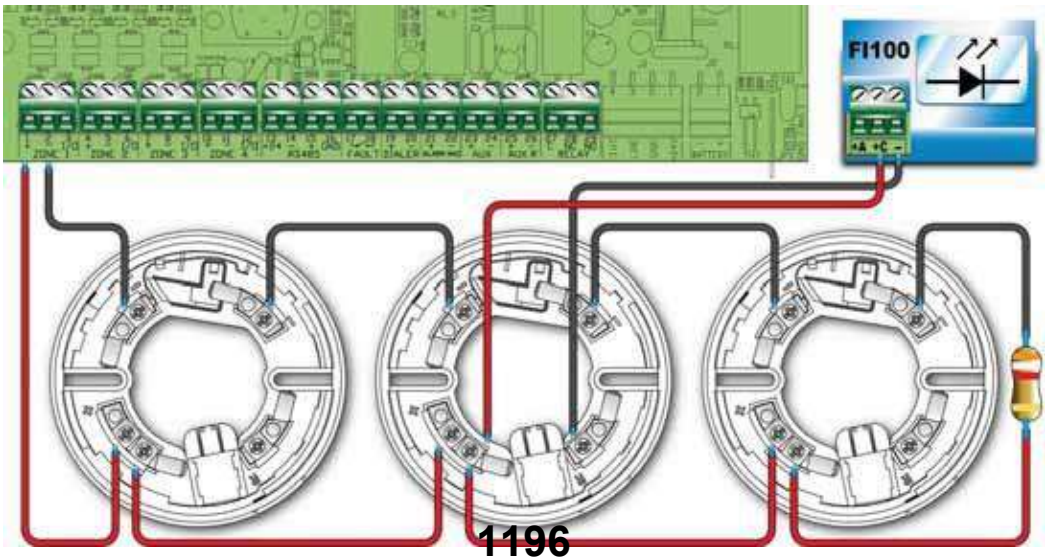

and open the chamber then, using a small, soft-bristle brush or hand-held vacuum cleaner remove all dust particles from inside and around the smoke detection chamber and free the protection mesh from all contaminants.

- **Heat detector test**; using a suitable device (e.g. hairdryer), create heat in the vicinity of the detector, then work through the steps described in the device instruction sheet. During each periodic maintenance inspection, ensure that the heat element is intact and that is not obstructed by dust or paint. If it is, using a small, soft-bristle brush or hand-held vacuum cleaner remove all contaminants.

Operating mode

The bicolour LED (360° viewing) indicates the detector status.

- Green blinking at 30-second intervals: detector in standby status (i.e. operating properly).
- Green blinking at 5-second intervals: detector in fault status. Further details regarding the cause of the fault (high contamination level in the smoke chamber, detector component fault, etc.) can be obtained through the EITK-DRV driver.
- Red LED On solid: detector in alarm status.

The detectors have an output (terminal "R"), for the connection of an alarm repeater LED. This LED will activate when the detector it refers to triggers an alarm.

Using the EITK-DRV driver

The EITK-DRV driver allows you to change the operating parameters of the detectors, check the contamination level of the smoke chambers and also obtain accurate diagnostic data. It can operate through the USB port of a computer furnished with the relative software programme, or can function autonomously by way of the battery housed inside.

Each detector is capable of retaining memory (smoke and/or temperature depending on the model) of the 5 minutes prior to an alarm. Therefore, if an alarm occurs, it will be possible to obtain information regarding the onset of the fire by simply connecting the EITK-DRV driver to the detection line.

For further information and details regarding use of the EITK-DRV driver, refer to the respective handbook.

Warnings and limitations

Iris series detectors must be used exclusively with fully compliant, compatible control panels. Detectors may not provide timely warning of fire if coverage is limited by large obstructions (pillars, large machinery, etc.). When installing or working on a fire detection system, always refer to and comply with the established standard regulations and codes. Appropriate fire-risk assessment should be undertaken to determine the type of detectors required and their placements.

CE marking and certifications

DoP, EC DoC and certificates related to these products can be downloaded from the following link:
www.inim.biz/certifications

CE 0832

INIM Electronics s.r.l.
Via Fosso Antico snc - Fraz. Centobuchi
63076 Monteprandone (AP) - Italy
10
0832-CPR-F1152

EN 54-7:2000 + A1:2002 + A2:2006
ID100
Conventional optical smoke detector for fire detection and fire alarm systems installed in buildings

Essential characteristics		Performance
Nominal activation condition/sensitivity, response delay (response time) and performance under fire conditions		PASS
Operational reliability		PASS
Tolerance to supply voltage		PASS
Durability of operational reliability	Temperature resistance	PASS
	Vibration resistance	PASS
	Humidity resistance	PASS
	Corrosion resistance	PASS
	Electrical stability	PASS

CE 0832

INIM Electronics s.r.l.
Via Fosso Antico snc - Fraz. Centobuchi
63076 Monteprandone (AP) - Italy
10
0832-CPR-F1243

EN 54-5:2000 + A1:2002
ID200
Conventional class P heat detector for fire detection and fire alarm systems installed in buildings

Essential characteristics		Performance
Nominal activation condition/sensitivity, response delay (response time) and performance under fire conditions		PASS
Operational reliability		PASS
Tolerance to supply voltage		PASS
Durability of operational reliability	Temperature resistance	PASS
	Vibration resistance	PASS
	Humidity resistance	PASS
	Corrosion resistance	PASS
	Electrical stability	PASS

Detector class (EN54-5): A1R or B

CE 0832

INIM Electronics s.r.l.
Via Fosso Antico snc - Fraz. Centobuchi
63076 Monteprandone (AP) - Italy
10
0832-CPR-F1153

EN 54-5:2000 + A1:2002
EN 54-7:2000 + A1:2002 + A2:2006
ID300
Conventional multicriteria optical smoke and class P heat detector for fire detection and fire alarm systems installed in buildings

Essential characteristics		Performance
Nominal activation condition/sensitivity, response delay (response time) and performance under fire conditions		PASS
Operational reliability		PASS
Tolerance to supply voltage		PASS
Durability of operational reliability	Temperature resistance	PASS
	Vibration resistance	PASS
	Humidity resistance	PASS
	Corrosion resistance	PASS
	Electrical stability	PASS

Detector class (EN54-5): A1R or B

INIM Electronics reserves the right to change the technical specifications of this product without prior notice.

1197

INIM Electronics s.r.l.
via Fosso Antico, Centobuchi
63076, Monteprandone, (AP) Italy
Tel. +39 0735 70 50 07
Fax + 39 0735 70 49 12
www.inim.biz info@inim.biz

991c/01
991e/01
991a/01

Iris

Detectores de incendio convencionales

ID100 - detector óptico de humo
ID200 - detector de temperatura
ID300 - detector combinado

0832
0832-CPR-F1152
0832-CPR-F1243
0832-CPR-F1153

ATENCIÓN!

Para detalles sobre el posicionamiento, el área de cobertura y la modalidad de instalación remitirse a la normativa vigente sobre sistemas automáticos de detección de incendio. Los detectores de la serie Iris están certificados según las normativas EN54-7: Detectores de humo - Detectores puntiformes que funcionan según el principio de difusión de la luz, de transmisión de la luz o de ionización (solo para modelos ID100 y ID300) y EN54-5: Detectores de Calor - detectores puntiformes (solo para los modelo ID200 y ID300).

Descripción general

Los detectores de la serie Iris son capaces de detectar la presencia de algunos productos de combustión y por lo tanto la generación de puntos de incendio.

Los parámetros de funcionamiento de los detectores pueden ser modificados y adecuados a las condiciones ambientales a través del dispositivo EITK-DRV entregado por INIM Electronics. A través de este dispositivo es posible programar los detectores así como valorar la contaminación y el funcionamiento. Para mayores detalles ver el apartado "Uso del driver EITK-DRV".

El detector, que en condiciones de stand-by posee una baja absorción, 80μA, en caso de alarma aumenta la corriente absorbida hasta un máximo de 40mA, indicando de este modo el peligro a la central de control.

INIM Electronics pone a disposición tres modelos de detectores convencionales de la serie Iris que pueden reconocerse a través de la etiqueta de datos de la matrícula que se encuentra situada sobre la parte trasera. Esta etiqueta lleva un número de serie unívoco que identifica al dispositivo.

ID100

Detector óptico dotado de una cámara de prueba basada en el efecto de la difusión de la luz (efecto Tyndall). Para garantizar la eficacia no deben existir obstáculos en la entrada de aire en el interior de la cámara de prueba y el detector no debe ser expuesto directamente a corrientes de aire.

El detector indica una condición de alarma en el caso que el nivel de humo en el ambiente alcance los siguientes valores:

- 0.08 dB/m (modalidad configurable a través del EITK-DRV)
- 0.10 dB/m (modalidad configurable a través del EITK-DRV)
- 0.12 dB/m (modalidad preconfigurada)
- 0.15 dB/m (modalidad configurable a través del EITK-DRV)

ID200

Detector térmico dotado de un elemento termo-sensible capaz de valorar la temperatura ambiente.

Las modalidades de funcionamiento que pueden configurarse a través de EITK-DRV son:

- "A1R" (pre-configurada); el detector indica una condición de alarma en el caso en que la temperatura ambiente supere los 58 °C o en el caso en que la temperatura sufra variaciones anómalas.
- "B"; el detector indica una condición de alarma en el caso que la temperatura ambiente supere los 72°C.
- "A2S"; el detector indica una condición de alarma en el caso que la temperatura ambiente supere los 58°C.
- "BR"; el detector indica una condición de alarma en el caso en que la temperatura ambiente supere los 72°C o en el caso en que la misma aumente muy rápido.

ATENCIÓN!

Las modalidades de funcionamiento "A2S" y "BR" no están certificadas.

ID300

Detector óptico-térmico dotado sea de cámara de prueba óptica para la detección del humo que de un elemento termosensible. La combinación de los valores permite, dependiendo de la modalidad de funcionamiento seleccionada a través del dispositivo EITK-DRV, obtener un detector más sensible y por lo tanto capaz de actuar con mayor rapidez y poder detectar focos de incendio caracterizados por una escasa emisión de humo, además de obtener un detector con una mayor inmunidad a las falsas alarmas.

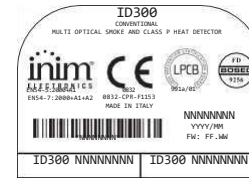

Las modalidades de funcionamiento que pueden configurarse a través de EITK-DRV son:

- "PLUS" (preconfigurada); el detector indica una condición de alarma en el caso que se supere el valor límite de humo (que puede configurarse tal y como se ha descrito para el modelo ID100) o en el caso que se supere el valor de temperatura (que puede configurarse tal y como se describe para el modelo ID200). Además en el caso que aumente la sensibilidad de la cámara de humo es aumentada. Esta modalidad de funcionamiento, caracterizada por una alta sensibilidad, permite detectar también focos de incendio caracterizados por una escasa emisión de humo y la creación de llamas (p. ej combustión de alcohol o combustibles equiparables).
- "OR"; el detector indica una condición de alarma en el caso que se supere el valor límite de humo (que puede configurarse tal y como se ha descrito para el modelo ID100) o en el caso que se supere el valor de temperatura (que puede configurarse tal y como se describe para el modelo ID200). Esta modalidad de funcionamiento, caracterizada por una discreta sensibilidad, permite detectar sea focos de incendio con una buena emisión de humo y poco calor (incendios cobantes) que focos de incendio con una escasa emisión de humo y una alta generación de calor (sustancias químicas)
- "AND"; el detector indica una condición de alarma solo en el caso que se supere el valor límite de humo (que puede configurarse tal y como se ha descrito para el modelo ID100) o al mismo tiempo si se supera el valor de temperatura (que puede configurarse tal y como se describe para el modelo ID200). Esta modalidad de funcionamiento, caracterizada por una baja sensibilidad, permite reducir la incidencia de falsas alarmas en aquellas condiciones de uso en las que una de las dos dimensiones físicas (humo o temperatura) podrían aumentar incluso en ausencia de riesgo de incendio.

ATENCIÓN!

Debido a la baja reactividad valorar atentamente las condiciones ambientales antes de seleccionar esta modalidad de funcionamiento.

- "HUMO"; El detector asume las mismas características que el detector modelo ID100
- "TEMPERATURA"; El detector asume las mismas características que el detector modelo ID200

Especificaciones técnicas	ID100	ID200	ID300
Tensión de alimentación	10-30V ⎓		
Corriente absorbida en reposo	90μA	70μA	90μA
Corriente absorbida en alarma	Max 40mA		
Corriente absorbida de la salida "R" (limitada internamente)	Max 14mA		
Temperatura de funcionamiento	-5°C / +40°C		
Humedad (sin condensación)	95% RH		
Altura (base estándar incluida)	46mm	54mm	
Diámetro (base estándar incluida)	110mm		
Peso (base estándar incluida)	160g		
Peso (base estándar excluida)	91g		

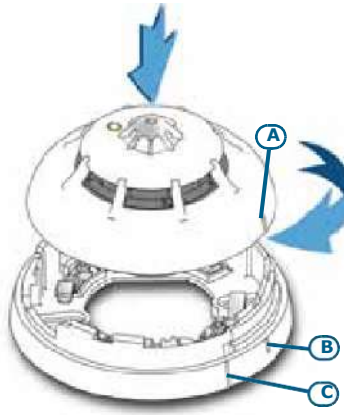

Instalación

ATENCIÓN!

Los detectores son entregados con una tapa de protección que previene el daño a causa de golpes accidentales y la contaminación debida a la cantidad de polvo presente en el aire. Esta protección debe ser extraída solamente en el momento que se produzca la activación del sistema.

Los detectores de la serie Iris deben utilizarse con una de las siguientes bases de montaje compatibles:

- **EB0010**; base de montaje estándar
  Un ejemplo de instalación sobre bases estándar puede visualizarse a continuación.

ATENCIÓN!

El valor de resistencia de final de línea (EOL) depende del tipo de central.

- **EB0020**; base de montaje con relé
  Para utilizarse con la conexión del detector con sistemas antirrobo o con centrales con conexiones con 4 cables. Para el esquema de conexión remitirse a las instrucciones que se encuentran contenidas en la base EB0020.

ATENCIÓN!

Las dos etiquetas separables con número de serie deben extraerse del detector y colocarse una sobre la base de fijación y la otra sobre el plano del sistema.

Una vez finalizada la instalación de la base posicionar el detector sobre la base, ejerciendo una ligera presión girar en sentido horario hasta alinear la muesca [A] con la muesca [B] enganchando la base al detector. Realizando una breve rotación se alinea la muesca [A] con la muesca [C], permitiendo a las láminas de la base enganchar los contactos del detector.

Prueba y mantenimiento

Para arrancar o realizar un control periódico del sistema utilizar las siguientes indicaciones:

- **Control del parpadeo del LED**; en el caso que la frecuencia de parpadeo sea de 5 minutos el detector se encuentra en una condición de fallo. En tal caso proceder a la limpieza de la cámara óptica y verificar si el problema desaparece. En caso contrario proceder con la sustitución del detector (el aparato EITK-DRV permite localizar la causa del fallo).

1199

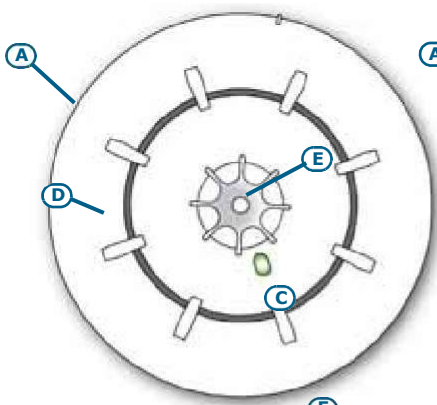

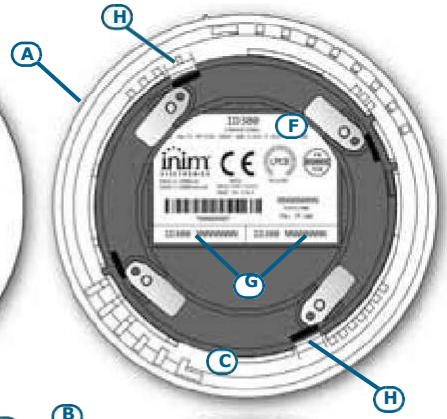

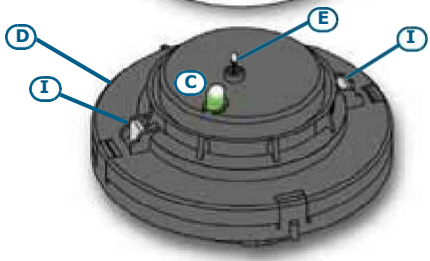

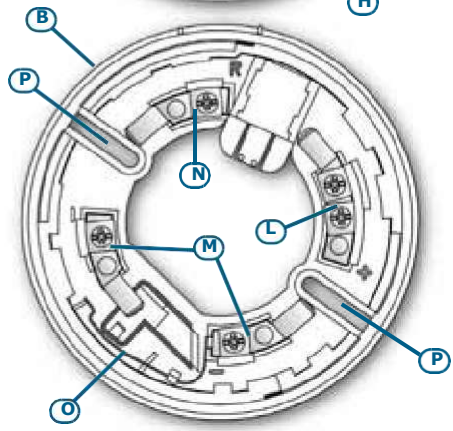

A	Detector	H	Ganchos de desmontaje de la tapa
B	Base	I	Ganchos de desmontaje de la cámara óptica
C	LED rojo/verde	L	Terminal "+"
D	Cámara óptica	M	Terminales "-"
E	Detecto térmico	N	Terminal "R"
F	Etiqueta con los datos de matrícula	O	Lamina para cortocircuito
G	Etiquetas con el número de serie extraíbles	P	Orificios de anclaje

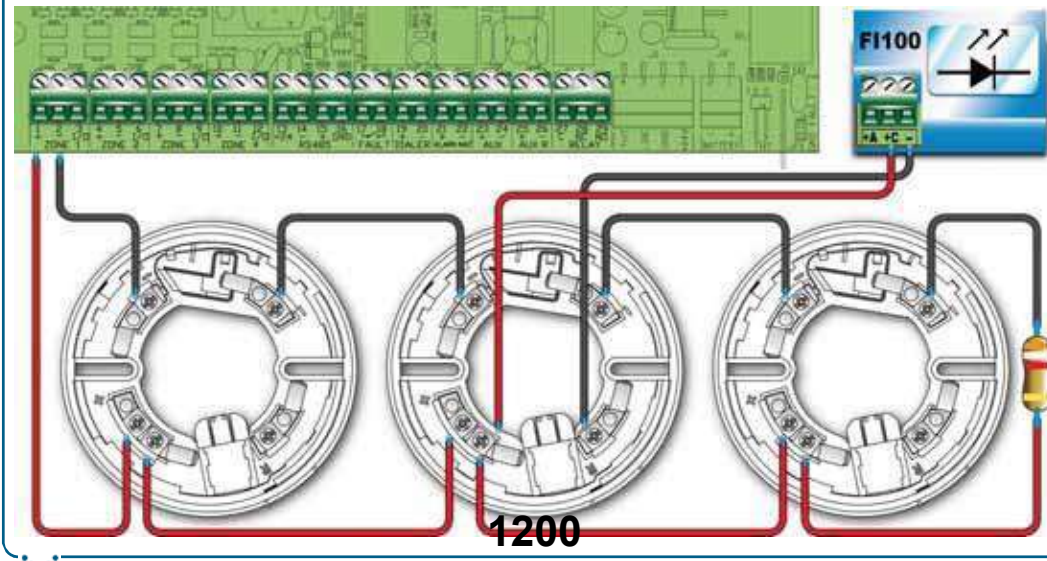

- **Prueba y mantenimiento del detector óptico**; el detector de humo debe probarse al final de la instalación y de forma periódica de acuerdo con la normativa vigente. Para probar la detección de humo utilizar aerosoles indicados para ello y seguir las instrucciones anexadas.
  Asegurarse que las entradas de la cámara de prueba no se encuentren obstruidos. Si se genera una discreta acumulación de polvo en el interior de la cámara (a través del aparato EITK-DRV es posible leer el valor exacto) proceder a la apertura de la cámara de prueba y a su limpieza utilizando un chorro de aire o un pincel seco. Asegurarse que todo el polvo haya sido eliminado y verificar que la red de protección contra la entrada de insectos no se encuentre obstruida.
- **Prueba y mantenimiento del detector de temperatura**; utilizar un aparato indicado que sea capaz de elevar la temperatura en las inmediaciones del detector y seguir las instrucciones anexadas. Con cada control periódico asegurarse que el elemento sensible a la temperatura se encuentre integro y no esté obstruido con polvo o pintura, en tal caso proceder a su limpieza utilizando un chorro de agua o un pincel seco.

Funcionamiento

El LED bicolor (visible a 360°) muestra el estado del detector.

- Un parpadeo verde cada 30 segundos: detector en funcionamiento correcto.
- Un parpadeo verde cada 5 segundos; detector en condición de fallo; mayores detalles acerca de la causa del fallo (contaminación excesiva en la cámara óptica, fallo de una parte del detector, etc.) pueden obtenerse a través del aparato EITK-DRV.
- Rojo encendido fijo: detector en estado de alarma.

Los detectores están dotados de una salida, el terminal "R", para la conexión de un led de repetición de alarma; este led es activado cuando el detector entra en la condición de alarma.

Uso del driver EITK-DRV

El driver EITK-DRV permite modificar los parámetros de funcionamiento de los detectores, valorar el estado de contaminación y realizar un diagnóstico detallado. El driver puede ser utilizado conectado a una puerta USB de un PC sobre el que se encuentra en ejecución el software suministrado con el aparato o de manera autónoma gracias a la batería que se encuentra contenida en su interior.

Cada detector contiene una memoria de la seguimiento de las dimensiones físicas (humo y temperatura según los modelos) en los 5 minutos que han precedido a la última alarma, por lo tanto utilizando el driver EITK-DRV es posible conectarse a la línea de detección y para cada detector obtener un gráfico detallado de la evolución del principio de incendio.

Para mayores detalles y para el uso del driver EITK-DRV remitirse al manual anexado.

Advertencias y limitaciones

Los detectores de la serie Iris deben ser utilizados exclusivamente con centrales de control compatibles y conformes con la normativa vigente. El detector no es capaz de garantizar el funcionamiento si existen barreras situadas entre el elemento sensible y el foco de incendio (elementos sobresalientes del techo, etc.). Remitirse a la normativa local vigente para realizar una correcta instalación y mantenimiento del sistema, una cuidada valoración del riesgo de incendio debe realizarse antes de elegir el tipo de detector y su posicionamiento.

Marcado CE y certificaciones

DoP, EC DoC y certificados relacionados con estos productos se pueden descargar desde el siguiente enlace:
www.inim.biz/certifications

CE 0832

INIM Electronics s.r.l.
Via Fosso Antico snc - Fraz. Centobuchi
63076 Monteprandone (AP) - Italy
10
0832-CPR-F1152

EN 54-7:2000 + A1:2002 + A2:2006

ID100

Detector de humo óptico convencional para sistemas de detección y alarma de incendios para edificios

Características esenciales		Prestaciones
Condición nominal de activación/ sensibilidad, retardo de respuesta (tiempo de respuesta) y rendimiento en condiciones de incendio		PASS
Confiabilidad de funcionamiento		PASS
Tolerancia a la tensión de alimentación		PASS
Durabilidad de la fiabilidad de funcionamiento	Resistencia a la temperatura	PASS
	Resistencia a las vibraciones	PASS
	Resistencia a la humedad	PASS
	Resistencia a la corrosión	PASS
	Estabilidad eléctrica	PASS

CE 0832

INIM Electronics s.r.l.
Via Fosso Antico snc - Fraz. Centobuchi
63076 Monteprandone (AP) - Italy
10
0832-CPR-F1243

EN 54-5:2000 + A1:2002

ID200

Detector de calor clase P convencional para sistemas de detección y alarma de incendios para edificios

Características esenciales		Prestaciones
Condición nominal de activación/ sensibilidad, retardo de respuesta (tiempo de respuesta) y rendimiento en condiciones de incendio		PASS
Confiabilidad de funcionamiento		PASS
Tolerancia a la tensión de alimentación		PASS
Durabilidad de la fiabilidad de funcionamiento	Resistencia a la temperatura	PASS
	Resistencia a las vibraciones	PASS
	Resistencia a la humedad	PASS
	Resistencia a la corrosión	PASS
	Estabilidad eléctrica	PASS

Detector de clase (EN54-5): A1R o B

CE 0832

INIM Electronics s.r.l.
Via Fosso Antico snc - Fraz. Centobuchi
63076 Monteprandone (AP) - Italy
10
0832-CPR-F1153

EN 54-5:2000 + A1:2002
EN 54-7:2000 + A1:2002 + A2:2006

ID300

Detector multicriterio de humo óptico y de calor clase P convencional para sistemas de detección y alarma de incendios para edificios

Características esenciales		Prestaciones
Condición nominal de activación/ sensibilidad, retardo de respuesta (tiempo de respuesta) y rendimiento en condiciones de incendio		PASS
Confiabilidad de funcionamiento		PASS
Tolerancia a la tensión de alimentación		PASS
Durabilidad de la fiabilidad de funcionamiento	Resistencia a la temperatura	PASS
	Resistencia a las vibraciones	PASS
	Resistencia a la humedad	PASS
	Resistencia a la corrosión	PASS
	Estabilidad eléctrica	PASS

Detector de clase (EN54-5): A1R o B

La información contenida en la presente hoja puede estar sometida a modificaciones sin aviso previo y no representan una obligación por parte de INIM Electronics.

1201

INIM Electronics s.r.l.
via Fosso Antico, Centobuchi
63076, Monteprandone, (AP) Italy
Tel. +39 0735 70 50 07
Fax + 39 0735 70 49 12
www.inim.biz info@inim.biz

991c/01
991e/01
991a/01

Iris

Détecteurs d'incendie conventionnels

ID100 - détecteur optique de fumée
ID200 - capteur de température
ID300 - détecteur combiné

0832
0832-CPR-F1152
0832-CPR-F1243
0832-CPR-F1153

Pour les détails sur le positionnement, les aires de couverture et les modalités d'installation, faire référence aux normes en matière de systèmes automatiques de détection d'incendie. Les détecteurs de la série Iris sont certifiés selon les normes EN54-7: Détecteurs de fumée - Détecteurs ponctuels fonctionnant selon le principe de la diffusion de la lumière, de la transmission de lumière ou de la ionisation (modèles ID100 et ID300 seulement) et EN54-5: Détecteurs de chaleur - détecteurs ponctuels (modèles ID200 et ID300 seulement).

ATTENTION!

Description générale

Les détecteurs de la série Iris peuvent relever la présence de certains produits de combustion et donc la naissance de foyers d'incendie.

Les paramètres de fonctionnement peuvent être modifiés et adaptés aux conditions environnementales par moyen du dispositif EITK-DRV fourni par INIM Electronics; à travers ce dispositif il est possible de programmer les détecteurs et évaluer la contamination et le fonctionnement. Pour d'ultérieurs détails voir le paragraphe "Utilisation du driver EITK-DRV".

Le détecteur, en condition de veille a une basse absorption, 80μA, en cas d'alarme, le courant absorbé augmente jusqu'à un maximum de 40mA, en signalant ainsi un danger à la centrale de contrôle.

INIM Electronics met à disposition trois modèles de détecteurs conventionnels de la série Iris qui peuvent être reconnus par moyen de l'étiquette données de plaque sur le rétro. Cette étiquette comprend le numéro sériel univoque qui identifie le dispositif.

ID100

Détecteur optique doté d'une chambre d'échantillonnage basée sur l'effet de la diffusion de la lumière (effet Tyndall), pour garantir l'efficacité il ne doit pas y avoir d'obstacle entre l'entrée de l'air à l'intérieur de la chambre d'échantillonnage, en outre le détecteur ne doit pas être en contact direct avec des courants d'air.

Le détecteur signale une condition d'alarme dans le cas où le niveau de fumée rejoint les valeurs suivantes:

- 0,08 dB/m (mode réglable avec le EITK-DRV)
- 0,10 dB/m (mode réglable avec le EITK-DRV)
- 0,12 dB/m (modalité réglée par défaut)
- 0,15 dB/m (mode réglable avec le EITK-DRV)

ID200

Capteur thermique doté d'un élément sensible à la température capable de relever la température dans l'environnement.

Les modalités de fonctionnement, réglables avec le EITK-DRV, sont:

- "A1R" (réglé par défaut); le détecteur signale une condition d'alarme dans le cas où la température dépasse les 58 °C ou dans le cas où la température subit des variations anormales
- "B"; le détecteur signale une condition d'alarme dans le cas où la température dépasse les 72°C.
- "A2S"; le détecteur signale une condition d'alarme dans le cas où la température dépasse les 58°C.
- "BR"; le détecteur signale une condition d'alarme dans le cas où la température dépasse les 72°C ou dans le cas où si celle ci augmente trop rapidement.

Les modalités de fonctionnement "A2S" et "BR" ne sont pas certifiées.

ATTENTION!

ID300

Capteur optique-thermique doté de chambre d'échantillonnage optique de fumée de et de l'élément sensible à la température. La combinaison des valeurs permet, selon les modalités de fonctionnement sélectionnées à travers le dispositif EITK-DRV, d'obtenir un détecteur plus sensible qui réagit plus rapidement et relève les foyers avec peu de fumée ou d'obtenir un détecteur avec une immunité majeure aux fausses alarmes.

Les modalités de fonctionnement, réglables avec le EITK-DRV, sont:

- "PLUS" (réglé par défaut); le détecteur signale une condition d'alarme dans le cas où le seuil de la valeur de la fumée est dépassé (réglable comme décrit pour le modèle ID100) ou dans le cas où le seuil de température est dépassé (réglable comme décrit pour le modèle ID200). En outre si la température augmente, la sensibilité de la chambre de fumée est augmentée. Cette modalité de fonctionnement, caractérisée par une sensibilité élevée, permet de relever aussi des foyers d'incendie avec peu d'émission de fumée et peu de flamme (ex. combustion d'alcool ou similaires).
- "OR"; le détecteur signale une condition d'alarme dans le cas où le seuil de la valeur de la fumée est dépassé (réglable comme décrit pour le modèle ID100) ou dans le cas où le seuil de température est dépassé (réglable comme décrit pour le modèle ID200). Cette modalité de fonctionnement, caractérisée par une sensibilité discrète, permet de relever des foyers d'incendie avec une bonne émission de fumée et peu de chaleur (foyers couvés) et des foyers avec peu d'émission de fumée et une chaleur élevée (substances chimiques)
- "AND"; le détecteur signale une condition d'alarme dans le cas où le seuil de la valeur de la fumée est dépassé (réglable comme décrit pour le modèle ID100) ou dans le cas où le seuil de température est dépassé (réglable comme décrit pour le modèle ID200). Cette modalité de fonctionnement, caractérisée par une basse sensibilité, permet de réduire l'incidence de fausses alarmes dans les conditions dans lesquelles la fumée et la température pourraient augmenter même en absence d'un risque d'incendie.

Vue la faible réaction, il faut évaluer attentivement les conditions environnementales avant de sélectionner cette modalité. ***ATTENTION!***

- "FUMEE"; Le détecteur a les mêmes caractéristiques que le détecteur ID100
- "TEMPERATURE"; Le détecteur a les mêmes caractéristiques que le détecteur ID200

Caractéristiques techniques	ID100	ID200	ID300
Tension d'alimentation	10-30V ⎓		
Courant absorbé en veille	90µA	70µA	90µA
Courant absorbé en phase d'alarme	Max 40mA		
Courant absorbé à la sortie "R" (limitée)	Max 14mA		
Température de fonctionnement	-5°C / +40°C		
Humidité (sans condensation)	95% RH		
Hauteur (base standard incluse)	46mm	54mm	
Diamètre (base standard incluse)	110mm		
Poids (base standard incluse)	160g		
Poids (base standard excluse)	91g		

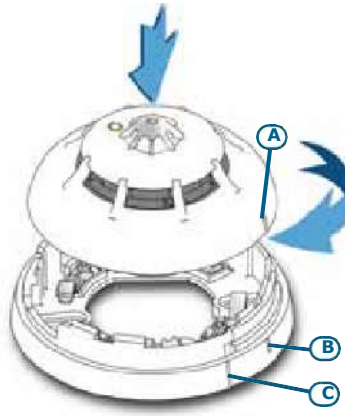

Installation

Les détecteurs sont fournis avec un couvercle de protection qui prévient les dommages causés par des chocs accidentels et la contamination due à la poussière dans l'air, cette protection doit être enlevée seulement au moment où l'on effectue la mise en fonction du système. ***ATTENTION!***

Les détecteurs de la série Iris doivent être utilisés avec une des bases de montage compatibles suivantes:

- **EB0010**; base de montage standard
  Un exemple d'installation sur bases standard et reporté à coté.

La valeur de résistance de fin de ligne (EOL) dépend du type de centrale. ***ATTENTION!***

- **EB0020**; Base de montage avec relais
  A utiliser pour la connexion du détecteur aux systèmes anti-intrusion ou aux centrales avec câblage à 4 fils. Pour le schéma de branchement faire référence aux instructions contenues dans la base EB0020.

Les deux étiquettes détachables avec le numéro sériel doivent être retirées du détecteur et placées une sur la base de fixation et une sur le schéma du système. ***ATTENTION!***

Une fois terminée l'installation de la base, positionner le détecteur sur la base, en exerçant une pression légère, tourner en sens horaire jusqu'à aligner le cran [A] avec le cran [B] en accrochant la base au détecteur; avec une ultérieure rotation brève le cran [A] s'aligne avec le cran [C], permettant ainsi aux lamelles de la base de s'accrocher aux contacts du détecteur.

Test et entretiens

Pour la mise en fonction ou le contrôle périodique du système, suivre les indications suivantes:

- **Contrôle du clignotement LED**; si la fréquence de clignotement est de 5 secondes, c'est une condition de panne, il faut donc procéder au nettoyage de la chambre optique et vérifier si le problème disparait. Dans le cas contraire, substituer le détecteur (l'appareil EITK-DRV permet de relever la cause de la panne).
- **Test et entretien du capteur optique**; le détecteur de fumée doit être testé à la fin de l'installation et de manière périodique selon les normes applicables. Pour tester la détection de fumée utiliser l'aérosol spray conçu pour cela et suivre les indications annexées.

1203

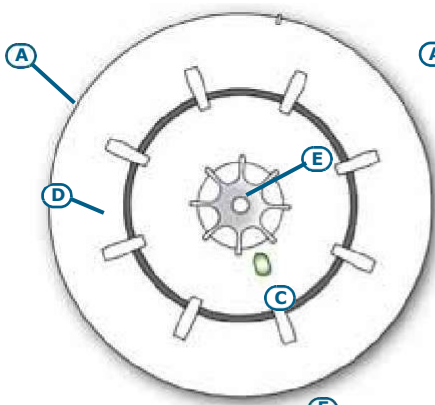

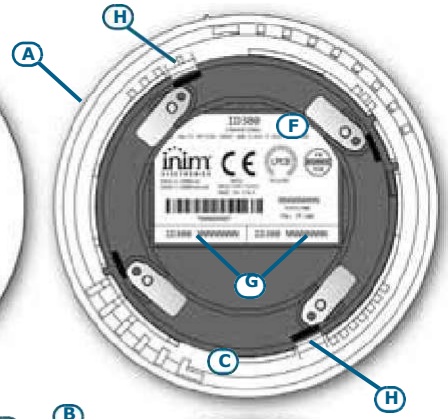

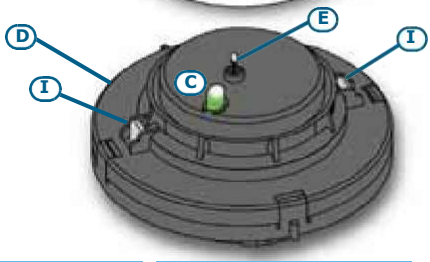

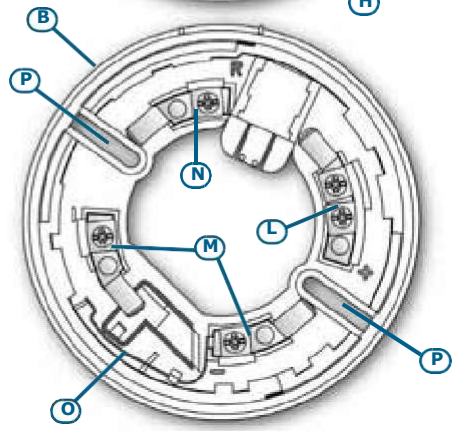

A	Détecteur
B	Base
C	LED rouge/verte
D	Chambre optique
E	Capteur thermique
F	Etiquettes donnees de plaque
G	Etiquettes numero sériel amovibles

H	Crochet pour démon-ter le couvercle
I	Crochet pour demon-ter la chambre optique
L	Terminal "+"
M	Terminaux "-"
N	Terminal "R"
O	Lamelle pour court circuit
P	Crans d'ancrage

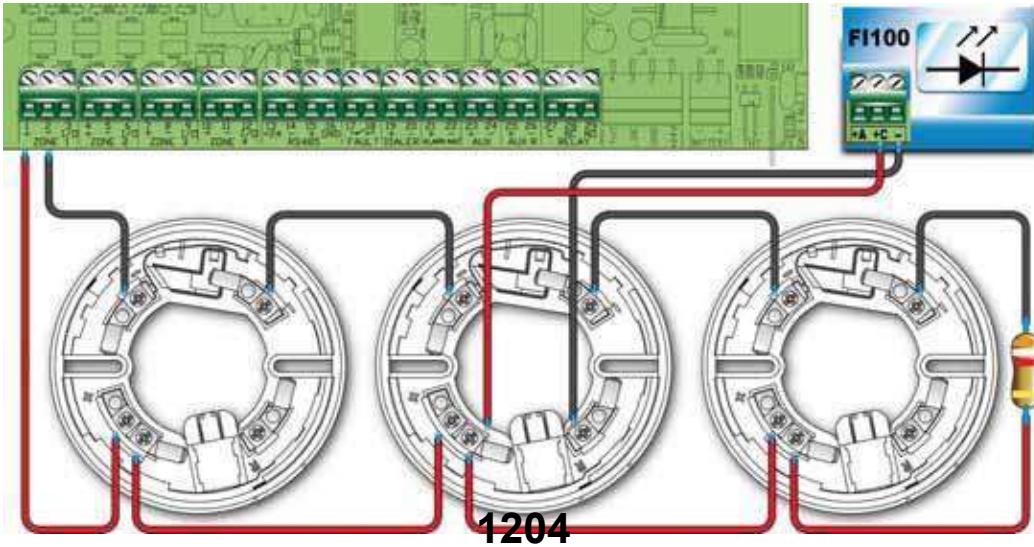

S'assurer que les entrées de la chambre d'échantillonnage ne soient pas obstruées. Si un peu de poussière est relevée à l'intérieur de la chambre (avec l'appareil EITK-DRV il est possible d'en lire le niveau exact) procéder à l'ouverture de la chambre d'échantillonnage et à son nettoyage en utilisant un jet d'air ou un pinceau sec. S'assurer que toute la poussière soit enlevée et vérifier que la grille de protection contre les insectes ne soit pas obstruée.

- **Test et entretien du capteur de température**; utiliser un appareil qui puisse augmenter la température dans l'environnement où est placé le détecteur e suivre les indications annexées. A chaque contrôle périodique s'assurer que l'élément sensible à la température soit intègre et ne soit pas obstrué par de la poussière ou de la peinture, dans ce cas nettoyer avec un jet d'air ou un pinceau sec.

Fonctionnement

La LED bicolore (visible à 360°) indique l'état du détecteur.

- Un clignotement vert toutes les 30 secondes: détecteur en fonction correctement
- Un clignotement vert toutes les 5 secondes: détecteur en panne; plus de détails sur la cause de la panne (contamination excessive de la chambre optique, panne du détecteur etc.) peuvent être obtenus à travers l'appareil EITK-DRV.
- Voyant rouge allumé fixe: détecteur en alarme

Les détecteurs sont dotés d'une sortie, le terminal "R", pour la connexion d'un voyant de répétition d'alarme; ce voyant est activé quand le détecteur entre en alarme.

Utilisation du driver EITK-DRV

Le driver EITK-DRV permet de modifier le fonctionnement des détecteurs, d'en évaluer l'état de contamination, et d'effectuer une diagnostique précise. Le driver peut être utilisé à travers la connexion au port USB d'un PC lequel est en exécution le logiciel fourni avec l'appareil ou de manière autonome grâce à la batterie incorporée.

Chaque détecteur contient une mémoire des variations des valeurs de fumée et température selon les modèles, dans les 5 minutes qui ont précédé la dernière alarme, en utilisant donc le driver EITK-DRV il est possible de se connecter à la ligne de détection et pour chaque détecteur, obtenir un graphique avec les détails de l'évolution du principe d'incendie.

Pour plus de détails et pour l'utilisation du driver EITK-DRV, nous vous renvoyons au manuel en annexe.

Avertissements et limitations

Les détecteurs de la série Iris doivent être utilisés exclusivement avec des centrales de contrôle compatibles et conformes aux normes applicables. Le détecteur ne peut pas garantir un bon fonctionnement s'ils existent des barrières entre l'élément sensible et le foyer d'incendie (éléments au plafonds, etc.). Faire référence à la norme locale applicable pour l'installation correcte et l'entretien du système, une évaluation précise du risque d'incendie doit être faite avant de choisir le type de détecteur et son positionnement.

Marque CE et certifications

DoP, EC DoC et les certificats relatifs à ces produits peuvent être téléchargés à partir depuis le lien suivant:
www.inim.biz/certifications

CE
0832

INIM Electronics s.r.l.
Via Fosso Antico snc - Fraz. Centobuchi
63076 Monteprandone (AP) - Italy
10
0832-CPR-F1152

EN 54-7:2000 + A1:2002 + A2:2006
ID100
Détecteur optique de fumée conventionnel pour systèmes de détection et signalisation de incendie pour les bâtiments

Caractéristiques essentielles		Performances
Conditions nominales de activation/sensibilité, retard de réponse (temps de réponse) et performance en cas d'incendie		PASS
Fiabilité de fonctionnement		PASS
Tolérance à la tension d'alimentation		PASS
Durée de la fiabilité de fonctionnement	Résistance thermique	PASS
	Résistance aux vibrations	PASS
	Résistance à l'humidité	PASS
	Résistance à la corrosion	PASS
	Stabilité électrique	PASS

CE
0832

INIM Electronics s.r.l.
Via Fosso Antico snc - Fraz. Centobuchi
63076 Monteprandone (AP) - Italy
10
0832-CPR-F1243

EN 54-5:2000 + A1:2002
ID200
Détecteur de température de la classe P analogique conventionnel pour systèmes de détection et signalisation de incendie pour les bâtiments

Caractéristiques essentielles		Performances
Conditions nominales de activation/sensibilité, retard de réponse (temps de réponse) et performance en cas d'incendie		PASS
Fiabilité de fonctionnement		PASS
Tolérance à la tension d'alimentation		PASS
Durée de la fiabilité de fonctionnement	Résistance thermique	PASS
	Résistance aux vibrations	PASS
	Résistance à l'humidité	PASS
	Résistance à la corrosion	PASS
	Stabilité électrique	PASS

Détecteur de classe (EN54-5): A1R ou B

CE
0832

INIM Electronics s.r.l.
Via Fosso Antico snc - Fraz. Centobuchi
63076 Monteprandone (AP) - Italy
10
0832-CPR-F1153

EN 54-5:2000 + A1:2002
EN 54-7:2000 + A1:2002 + A2:2006
ID300
Détecteur combiné optique de fumée et de température de la classe P conventionnel pour systèmes de détection et signalisation de incendie pour les bâtiments

Caractéristiques essentielles		Performances
Conditions nominales de activation/sensibilité, retard de réponse (temps de réponse) et performance en cas d'incendie		PASS
Fiabilité de fonctionnement		PASS
Tolérance à la tension d'alimentation		PASS
Durée de la fiabilité de fonctionnement	Résistance thermique	PASS
	Résistance aux vibrations	PASS
	Résistance à l'humidité	PASS
	Résistance à la corrosion	PASS
	Stabilité électrique	PASS

Détecteur de classe (EN54-5): A1R ou B

Les informations contenues dans le document présent sont susceptibles d'être modifiées sans préavis et ne représentent pas un engagement de la part de INIM Electronics.

1205

INIM Electronics s.r.l.
via Fosso Antico, Centobuchi
63076, Monteprandone, (AP) Italy
Tel. +39 0735 70 50 07
Fax + 39 0735 70 49 12
www.inim.biz info@inim.biz

Fişă tehnică: E-DG - Detector de gaz metan.

Nr. crt.	Specificațiile tehnice ofertate	Producător - Denumire
0	1	2
1.	**Parametrii tehnici şi funcţionali:** — Material carcasă: ABS plastic UV stabilizat; — Sistem adresabil; — Umiditate relativă: 20-90% (fără condens); — Conexiune electrică: terminale cu şurub; — Valoare minimă de detecție: minim 5% L.E.L.; — Interval de alarmare 20%-50% L.E.L; — Detectează gazele pe principiul analizei aerului; — Algoritmi avansați de detecție și discriminare; — Instalare şi întreținere ușoară; — LED dual, pentru vizibilitate 360°; — N/C (normal/închis)-N/O (normal/deschis) - ieșire selectabilă de releu; — Compatibil cu centrala de incendiu.	**INIM ING700C- LE**
2.	**Condiții privind conformitatea cu standarde relevante:** – EN 60529 grade de protecție.	
3.	**Condiții de garanție şi postgaranție:** — Producătorul va garanta calitatea și buna funcționare a produsului timp de 24 luni de la punerea în funcțiune sau de 36 luni de la data livrării; — Produsul va corespunde normelor tehnice şi standardelor europene.	
4.	**Condiții cu caracter tehnic:** — Vor fi anexate: ▪ instrucțiuni de montaj (scheme de conectare, broșuri, cataloage); ▪ instrucțiuni de exploatare; ▪ buletine de încercări, verificări, probe; ▪ declarație de conformitate.	

PROIECTANT,

CIS GAZ S.A. - ROMÂNIA
CIS GAZ
RO1210493 J19910008826

Gas detector series Industrial
Installation Manual

These instructions shall be used by qualified service personnel only, who have been duly trained to install and maintain Gas detection systems.

WARNINGS

Valid for all variants of IP and ATEX Gas detectors

- Do not install and connect the gas detector without carefully reading these instructions. All operations must be executed by skilled personnel who are aware of the regulations and has attended a technical training course on products included in this manual.

- The housing must be earthed (grounded).

- Keep the sensor away from gas substances or solvents such as silicone and derivatives, acetone, all types of paints, alcohol & derivatives, cleaning solvents, turpentine, bleach, etc. These agents could damage the sensitive part of the sensor or permanently change the original setting. Strictly avoid to test the sensors with lighters or generic spray cans.

- When the sensor is outdoor installed, it's necessary to put an adequate cover over the sensor to avoid being directly wet by rain or snow.

- Do not install the sensor closed to vents, high speed air or vortexes.

- During the installation or maintenance of ATEX gas detectors, before opening the housing, make sure that the power is OFF (either 24Vdc or current loop) and that the application area is safe. Otherwise it's forbidden to open the sensor and execute connections.

- Do not disconnect any connectors or plug-in cards when the sensor is powered up.

- When the installation is completed, it's necessary to execute the electrical tests on the sensors by using the proper software, working with the simulation functions, generating pre-alarm, alarm and fault conditions and checking the exact match in the control panel or in any other device connected to the sensors

- For ATEX gas detectors it's mandatory to read carefully the safety instructions contained in the package.

- The Gas detector must be installed vertically with its nose facing down (see pictures).

- Do not unplug the connector of the sensitive element when it's powered and do not power the sensor when the head is not available

- The installation height is determined by the type of gas to be detected. Here below there are some examples; in case the type of gas is not included in this list, please check the specific gravity to avoid installation errors.

- **Examples:**

- Heavy gases: about 30 cm from the ground (eg. Propane, gasoline vapors etc.)

- Light gases: about 30 cm from the ceiling (eg. Methane, Hydrogen, etc)

- The Oxygen and Carbon Monoxide gas detectors have to be installed mainly at ca. 1,60 cm from the ground.

NOTES NOT SUBJECT TO REVIEW

Gas detector Moon series - Overview

The new generation of gas detectors Moon series is available with 5 different sensing elements, in order to provide a very large range of Gas detection applications.
The sensor can be combined with 6 different Communication Interfaces that can be selected according to the installation needs. Details and diagrams in the next pages.
The detector has been designed to give to the installer the possibility to check the sensor parameters, set and change the sensor element, provide maintenance service directly on-site, through a dedicated software application (Level 1 and Level 2).

L1 visualization

- Production year and serial number, sensor type, sensor code, unit of measure, gas head FW version, base board FW version.
- Indication of alarm and prealarm status, fault status and fault type.
- Prealarm and alarm threshold
- Prealarm and alarm filters
- 4-20mA working range
- Initialization delay
- Sensor life (working hours)
- Alarms number (only real alarms occurred during sensor life are counted, not software simulation).

Level 2

Password protected: it is possible set the sensor, with the support of calibrated gas cylinders, without any electronic adjustment trough trimmers or jumper, but easily trough the software interface. Moreover it is possible finalize the sensor element (head) substitution, even by software. This function is conform to the international technical norms in order to protect the detector from external sabotage or setting modification by not authorized personal.
The head substitution can be done only with a new one (same item). A different head will generate a failure into the detector.

L2 Parameters editing

- Prealarm and alarm threshold
- Prealarm and alarm filters
- 4-20mA working range
- Initialization delay
- Sensor element (head) substitution
- Calibration

Gas detector Moon series - G7(AP) E7(AD) product range

Description

Industrial gas detectors, available with IP55 metal housing or **ATEX II 2G Ex-d IIC T6** housing. The detector is combined with two boards: the first card controls the sensing element, and depends to the detected Gas type; the second one controls the communication to the control device (see the table below) and it is available either for connection to specific panels or for connection to normal electrical cabinets and PLC.
Sensors for automatic gas detection are generally suitable for explosion risks, Hydrocarbons (L.I.E. detection), toxicity Ammonia, Carbon Monoxide (ppm detection) and Oxygen control (% detection).

Code	Description	Page
G7-RL	3 relays connection	09
G7-AS	Conventional and Addressed Modules	10
G7-42	4-20mA connection	11
G7-LE	Loop Panels with Enea protocol	12

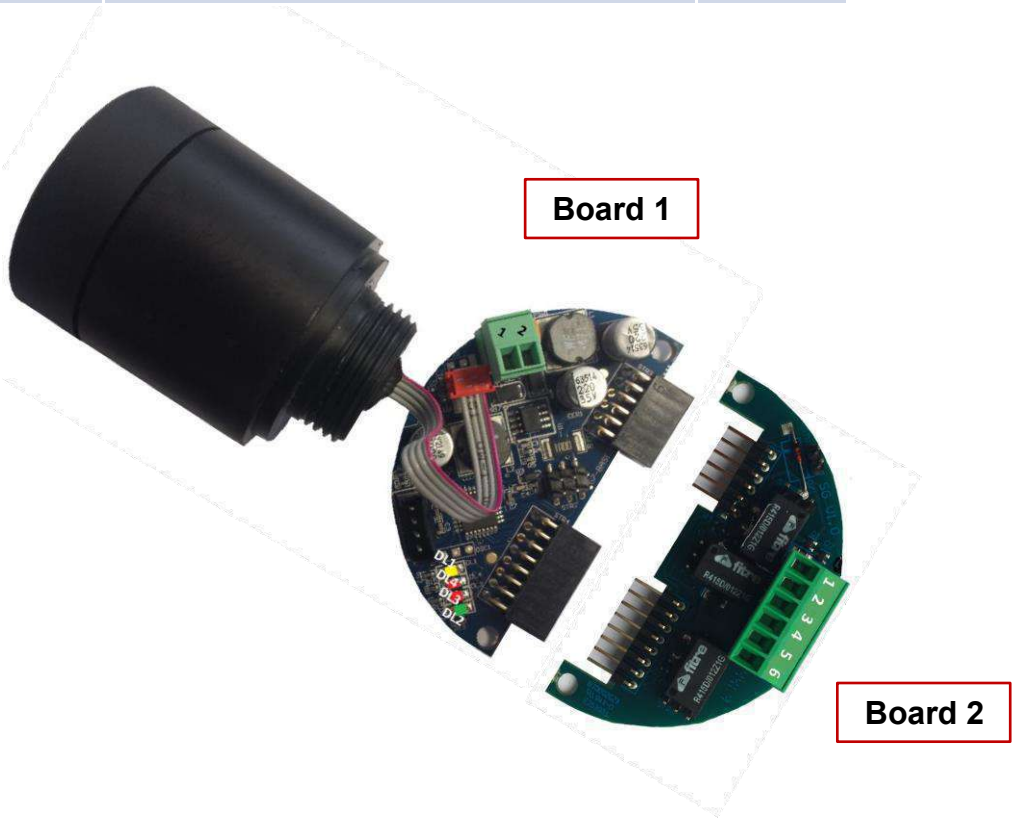

Gas detector Moon series - Technical Features

General Features

Power Supply:	12/24Vdc
Semiconductor sensors:	Max 50/80 mA (StBy/Alarm)
Catalytic sensors:	Max 70/100 mA (StBy/Alarm)
Elettrochemical cell sensors:	Max 30/60 mA (StBy/Alarm)
Operating temperature:	0 to 40 °C with compensation measurement
Humidity	Up to 90% relative, non-condensing
Max air speed	10 m/sec

Standard Thresholds

L.I.E.:	15% prealarm and 30% alarm
P.P.M.:	100ppm prealarm and 200ppm alarm
Oxygen (defect):	18% prealarm and 15% alarm
Oxygen (excess):	24% prealarm and 27% alarm

Mechanical Features

G7 metal housing	IP55 ADFT Dim. (HxWxD) 141x100x60mm Weight 370gr
E7 explosion proof housing	ATEX II 2G Ex-d IIC T6 Dim. (HxWxD) 170x90x78,50 Weight 1Kg

Electronic Base Board

LEDs Description

LD1 yellow color, failure.
LD2 green color, power supply presence.
LD3 red color, prealarm, Gas presence equal or higher to the prealarm threshold.
LD4 red color, alarm, Gas presence equal or higher to the alarm threshold

J1 Terminal board

1 Negative
2 Positive 12/24 Vdc

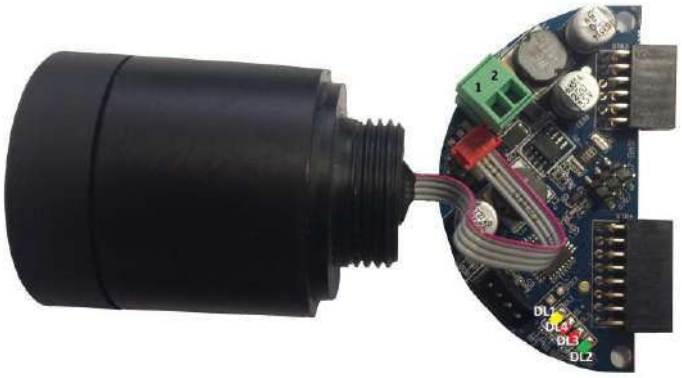

LIFE OF THE SENSORS

The average life of the sensors:

- Catalytic: in a clean environment the life can be of 3/4 years. In presence of pollution, the average life is reduced and as well the sensitivity.
- Electrochemical cell: in a clean environment, the life can be of 2/3 years. In presence of pollution, the average life of the sensor rapidly decreases.
- Semiconductor: in a clean environment the life can be of 3/4 years. In presence of pollution, the average life rapidly decreases and the values reading is altered.
- Infrared: in a clean environment the life can be of 5 years.

MAINTENANCE

- The Gas detectors maintenance is mandatory and it ensures the proper functioning of the sensor.
- The maintenance has to be planned according to the installation site and to the deterioration experienced by the sensors in the various environments, at least every 6 months.
- All operations must be executed in compliance with the relevant regulations in force.

G7-RL 3 Relais interface

Description

The 3 relays interface provide a free of voltage relay for each single event: alarm, prealarm and detector fault.
It is possible to set each single relay contact as NO or NC, trough the jumpers on board.
Power supply can be set to 12Vdc or 24Vdc opening or closing the dedicate jumper.

J1 Terminal board

1 Alarm output
2 Alarm output
3 Prealarm output
4 Prealarm output
5 Failure output
6 Failure output

Settings

STR3 Opened **24Vdc** - Closed **12Vdc**
STR4 Prealarm position 1-2 NC, 2-3 NO
STR5 Alarm position 1-2 NC, 2-3 NO
STR6 Failure position 1-2 NC, 2-3 NO

Technical Features

Power Supply 12/24 Vdc
Relay contacts current max 1A @ 30Vdc
Relay contacts current max 0,5A @ 12Vdc

Warning

Using relays interface, it's mandatory to have a power supply of at least 10 Vdc when working at 12Vdc, or at least 22 Vdc when working at 24 Vdc.

Layout

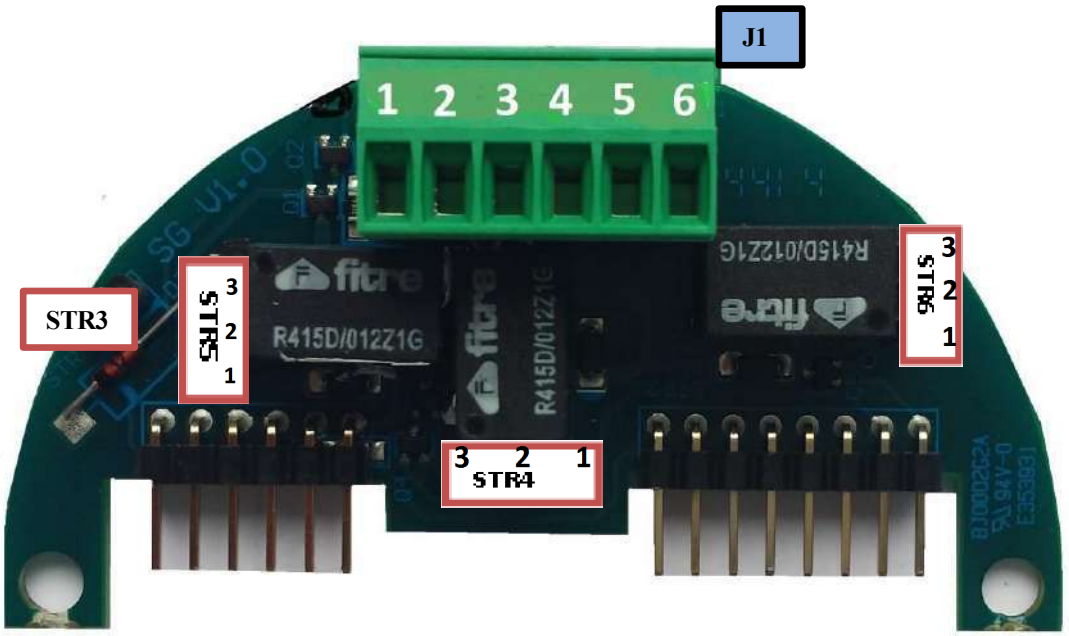

Description

The interface is developed to keep simple.
The connection to input modules, or to conventional panels, requires this interface has to be ordered with the specific resistors, for the specific panel/modules.
The resistors have to be pre-configured in manufacturer laboratories.
The interface allows a 2 wires connection without any balancing resistor.

Electronic Board type G7-AS

J1 Terminal board

1 Zone positive
2 Zone negative

Layout

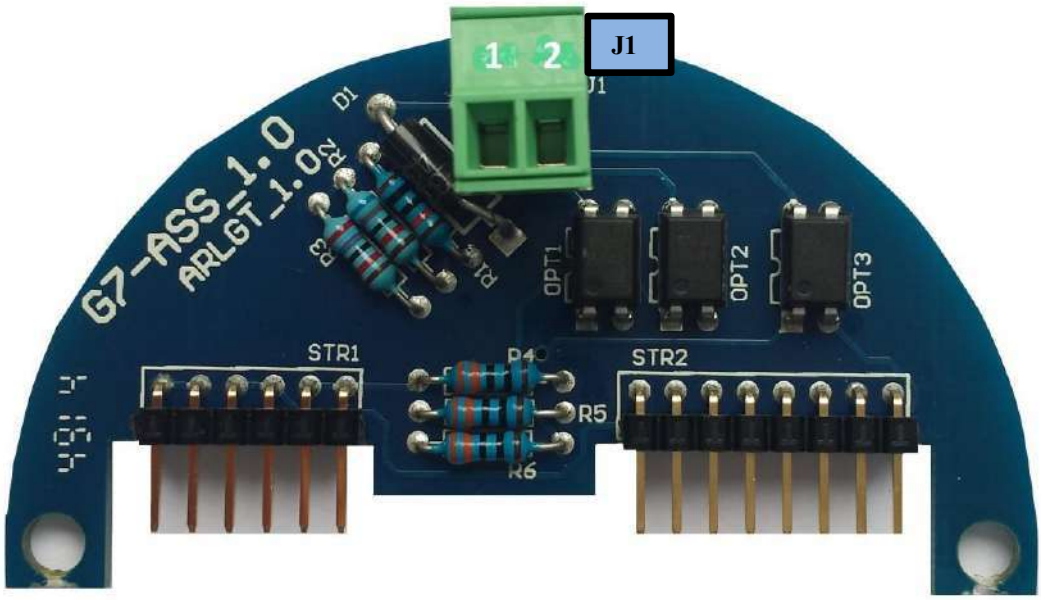

Note
Before connecting the interface to the module or to the panel, verify that the balancing resistors are correct for the module/panel it self.

G7-42 4-20mA Interface

Description

The G7-42 interface manages a 4-20mA output in the following way:

1. Active output with positive signal (Default)
2. Active output with negative signal
3. Passive output with positive signal
4. Passive output with negative signal

Electronic Board type G7-42

Settings

Type	Board G7-42				Base Board 1
	Str1	Str3	Str4	Str5	Str5
1	Close 2-3	Open	Close	Close 2-3	Open
2	Close 1-2	Close	Open	Close 1-2	Open
3	Open	Open	Close	Close 2-3	Close
4	Open	Close	Open	Close 1-2	Close

J1 Terminal board

Terminal	Type 1	Type 2	Type 3	Type 4
1	Positive	Negative	Positive	Negative
2	Negative	Positive	Negative	Positive

Layout

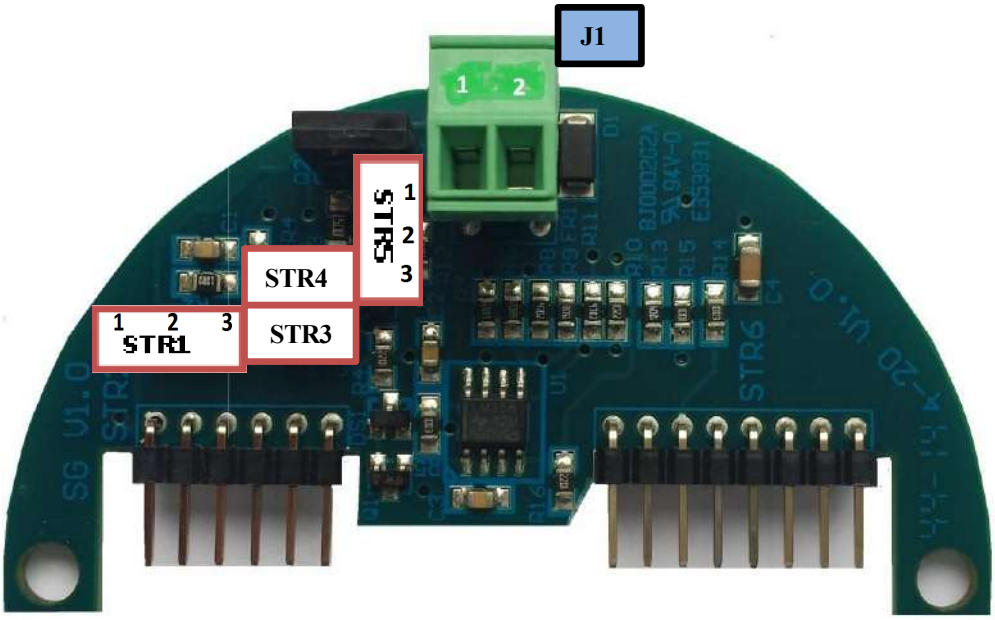

Note
Jumpers can be only moved with the board is switched off (without power supply).
Verify very well the right output type required, before power on.
A wrong setting may damage the interface.

G7-LE ENEA protocol Interface

Description

The interface has been developed in order to be connected directly to control panels with ENEA (INIM) protocol Loop lines. The communication support the different sensor types (Methane, Hydrogen, Propane, etc) and the real time analog value with three types of measurement units: **L.E.L, P.P.M, %**

Sensor addressing

As other ENEA devices, G7-LE interface has a serial-number address on board.
To assign to the control panel, refer to ENEA manuals and documentation.

Electronic Board type G7-LE

J1 Terminal board

1 - Loop IN
2 + Loop IN
3 - Loop OUT
4 + Loop OUT

Layout

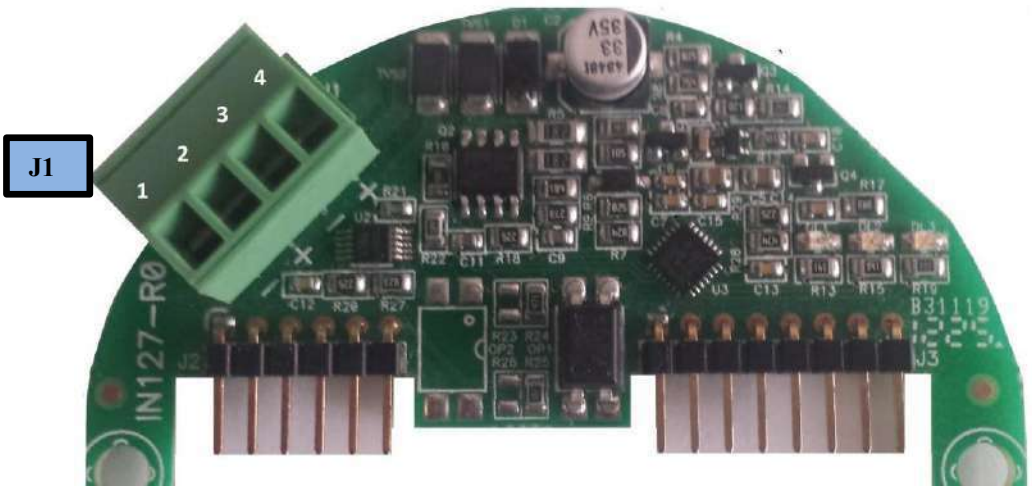

NOTE

IMPORTANT NOTE. Use a properly shielded cables size,conforming installation features, and connected the shield.

INIM Electronics S.r.l.
Via Fosso Antico
Loc. Centobuchi
63033 Monteprandone (AP)
www.inim.biz

Fișă tehnică: E-DG-Ex - Detector de gaze pentru medii cu pericol de explozie.

Nr. crt.	Specificațiile tehnice ofertate	Producător – Denumire
0	1	2
1.	**Parametrii tehnici şi funcţionali:** — Tensiunea de alimentare:11-28 Vcc; — Tipul de senzor: pelistor sau semiconductor pentru gaz explosiv; — Detectorul va avea praguri de semnalizare la 25% și respectiv 50% din LEL; — Detectorul va semnaliza prezența gazelor; — Funcție de monitorizare internă (watch dog); — Timp de auto-testare și stabilizare < 2min; — Timp de răspuns <60s la T90; — Material carcasă: aluminiu; — Material protecție: Inox, aluminiu; — Grad de protecție IP65; — Temperatura de lucru: -25°C...+50°C; — Umiditate relativă: 0-95% (fără condens); — Curent absorbit stand-by: maxim 10 mA; — Curent absorbit alarmă: maxim 100 mA; — Conexiune electrică: terminale cu şurub; — Compatibil cu centrala de incendiu prin transponder;	**INIM INE700C**
2.	**Specificații de performanță şi condiții privind siguranța în exploatare:** — Detectează gazele pe principiul analizei aerului; — Indicare locală și la distanță funcționare, defect, alarmă; — Marcaj Ex pentru grupa II zona 2; — Temperatura maximă de suprafață T4.	
3.	**Condiții privind conformitatea cu standarde relevante:** – EN 60079-0; EN 60529; EN 60079.	
4.	**Condiții de garanție şi postgaranție:** — Producătorul va garanta calitatea și buna funcționare a produsului timp de 24 luni de la punerea în funcțiune sau de 36 luni de la data livrării; — Produsul va corespunde normelor tehnice şi standardelor europene.	
5.	**Condiții cu caracter tehnic:** — Vor fi anexate: ▪ instrucțiuni de montaj (scheme de conectare, broșuri, cataloage); ▪ instrucțiuni de exploatare; ▪ buletine de încercări, verificări, probe; ▪ declarație de conformitate.	

PROIECTANT,

CIS GAZ S.A. - ROMÂNIA
CIS GAZ
RO1210493 J19910008826

Fişă tehnică: E-DIS-4P - Distribuitor cu 4 poli de mare curent.

Nr. crt.	Specificațiile tehnice ofertate	Producător - Denumire
0	1	2
1.	**Parametrii tehnici şi funcţionali:** — Număr poli: 4; — Curent nominal minim: 125A — Tensiune nominal: 230/400V; 50/60Hz-AC; — Tensiune maximă de operare: 500Vca; — Curent de scurt-circuit: Ipk 28kA / Icw 1s 3 kA; — Temperatura de lucru: : -25°C ...+55°C; — Montaj: cu cleme pe şină DIN 35mm;	**Schneider - LGY412560**
2.	**Specificații de performanță și condiții privind siguranța în exploatare:** – Protecția terminalelor la atingere cu mâna.	
3.	**Condiții privind conformitatea cu standarde relevante:** – Construcție conform: IEC 60947-7-1	
4.	**Condiții de garanție şi postgaranție:** — Producătorul va garanta calitatea și buna funcționare a produsului timp de 24 luni de la punerea în funcțiune sau de 36 luni de la data livrării. — Produsul va corespunde normelor tehnice şi standardelor europene.	
5.	**Condiții cu caracter tehnic:** — Vor fi anexate: ▪ instrucțiuni de montaj (scheme de conectare, broșuri, cataloage); ▪ instrucțiuni de exploatare; ▪ buletine de încercări, verificări, probe; ▪ declarație de conformitate.	

PROIECTANT,

CIS GAZ S.A. - ROMÂNIA
CIS GAZ
RO1210493 J19910008382

Product datasheet

Specifications

Linergy DS - screw distribution block 4P - 125A - 60 holes

LGY412560

Main

Range	Linergy
product name	Linergy DS
Product or component type	Distribution block

Complementary

Mounting support	DIN rail
Range compatibility	Prisma G Prisma P Prisma PH Prisma Pack Spacial Kaedra Pragma TeSys ComPact
Product compatibility	Spacial enclosures
Poles description	4P
Distribution block outgoers	4 x 15 holes
[Ue] rated operational voltage	230 V AC Ph/N 440 V AC Ph/Ph
[Ui] rated insulation voltage	500 V AC
[Uimp] rated impulse withstand voltage	8 kV
[Ie] rated operational current	125 A at 40 °C
[Icw] rated short-time withstand current	4.2 kA for 1 s
[Ipk] rated peak withstand current	28 kA
Connections - terminals	Supply: screw terminal 1 cable(s) 10…35 mm² rigid Supply: screw terminal 1 cable(s) 6…35 mm² flexible with cable end Distribution: screw terminal 3 cable(s) 6…35 mm² rigid Distribution: screw terminal 3 cable(s) 4…25 mm² flexible with cable end Distribution: screw terminal 11 cable(s) 1.5…16 mm² rigid Distribution: screw terminal 11 cable(s) 1.5…10 mm² flexible with cable end
Tightening torque	Distribution: 2 N.m flat screwdriver 6.5 mm Distribution: 2 N.m PZ2 screwdriver 6.5 mm Supply: 2.5 N.m flat screwdriver 9.5 mm Supply: 2.5 N.m PZ2 screwdriver 9.5 mm Distribution: 2 N.m flat screwdriver 8.5 mm Distribution: 2 N.m PZ2 screwdriver 8.5 mm
9 mm pitches	20
Height	100 mm
Width	174 mm

Disclaimer: This documentation is not intended as a substitute for and is not to be used for determining suitability or reliability of these products for specific user applications

Depth	50.5 mm
Net weight	0.562 kg
Colour	White (RAL 9003)

Environment

pollution degree	3
Overvoltage category	III
Dielectric strength	2500 V
Standards	EN/IEC 60947-7-1 EN/IEC 61439-1
ambient air temperature for operation	-25…55 °C

Packing Units

Unit Type of Package 1	PCE
Number of Units in Package 1	1
Package 1 Height	5.500 cm
Package 1 Width	10.500 cm
Package 1 Length	18.000 cm
Package 1 Weight	603.000 g
Unit Type of Package 2	S03
Number of Units in Package 2	15
Package 2 Height	30.000 cm
Package 2 Width	30.000 cm
Package 2 Length	40.000 cm
Package 2 Weight	9.502 kg
Unit Type of Package 3	P12
Number of Units in Package 3	120
Package 3 Height	45.000 cm
Package 3 Width	80.000 cm
Package 3 Length	120.000 cm
Package 3 Weight	90.000 kg

Contractual warranty

Warranty	18 months

Environmental Data

Schneider Electric aims to achieve Net Zero status by 2050 through supply chain partnerships, lower impact materials, and circularity via our ongoing “Use Better, Use Longer, Use Again” campaign to extend product lifetimes and recyclability.

Environmental Data explained

How we assess product sustainability

Use Better

Materials and Substances

Packaging made with recycled cardboard	**No**
Packaging without single use plastic	**Yes**
EU RoHS Directive	**Compliant with Exemptions**
SCIP Number	**B7c6f1d6-d622-4f6c-907b-f4c3173076cb**
REACh Regulation	**REACh Declaration**

Use Again

Repack and remanufacture

Take-back	**No**
WEEE	**The product must be disposed on European Union markets following specific waste collection and never end up in rubbish bins**

Fişă tehnică: E-DM - Declanşator manual.

Nr. crt.	Specificațiile tehnice ofertate	Producător - Denumire
0	1	2
1.	**Parametrii tehnici şi funcţionali:** — Material carcasă PC/ABS plastic, culoare roșu similar RAL3020; — Grad de protecție IP66/67; — Temperatura de funcționare : -40°C...+70°C; — Umiditate relativă: 0-95% (fără condens); — Conexiune electrică: terminale cu şurub max. 1,5mm² (AWG 30-14); — Reset cu cheie; — Indicator alarmă: LED roșu; — Cablare pe 2 fire, instalare simplă; — Impedanța în alarma : 680 Ohm - jumper tăiat; — 2 microcontacte NO, NC - 30V/1A; — Compatibil cu centrala de incendiu.	**INIM IC0011E**
2.	**Specificații de performanță şi condiții privind siguranța în exploatare:** — Conform standard EN54-11:2001/A1:2005, tip A; — Utilizabil la sistemele convenționale de antiincendiu.	
3.	**Condiții privind conformitatea cu standarde relevante:** — conform standarde în vigoare EN 54-11, type A; — EN 50130-4; — ISO 384.	
4.	**Condiții de garanție şi postgaranție:** — Producătorul va garanta calitatea și buna funcționare a produsului timp de 24 luni de la punerea în funcțiune sau de 36 luni de la data livrării; — Produsul va corespunde normelor tehnice şi standardelor europene.	
5.	**Condiții cu caracter tehnic:** — Vor fi anexate: ▪ instrucțiuni de montaj (scheme de conectare, broșuri, cataloage); ▪ instrucțiuni de exploatare; ▪ buletine de încercări, verificări, probe; ▪ declarație de conformitate.	

PROIECTANT,

CIS GAZ S.A. - ROMÂNIA
CIS GAZ
RO1210493 J19910008826

IC0011E

Inim

Conventional resettable manual push button. Outdoor use IP67

- Hermetic call point, suitable for outdoor installations.
- Maximum voltage: 30 V.
- Minimum Voltage: > 5.0 V if LED with R1 is chosen. > 6.0 V if LED with R2 is chosen.
- Rated current (standby): 0 mA.
- Nominal current (operating): > 19 mA at 12 V – R1. > 13mA at 12V – R2. > 45mA at 24V – R1. > 31mA at 24V – R2.
- Cable termination: 0.5 – 2.5mm2.
- Operating temperature:
- 30 / +70ºC.
- Humidity: 0
- 95%.
- IP67 rating.
- Material: ABS/Polycarbonate/PA6+fiberglass.
- Dimensions: 88x87x73mm.

Fişă tehnică: E-DMFT-Ex - Detector multicriterial de fum şi temperatură pentru medii cu pericol de explozie.

Nr. crt.	Specificațiile tehnice ofertate	Producător - Denumire
0	1	2
1.	**Parametrii tehnici şi funcţionali:** — Material carcasă ABS plastic UV stabilizat; — Grad de protecţie minim IP42; — Tensiune nominală : 9,5 -30Vcc; — Temperatura de lucru: -20°C...+70°C; — Umiditate relativă: 0-95% (fără condens); — Curent absorbit stand-by: maxim 5mA; — Curent absorbit alarmă: maxim 100mA; — Conexiune electrică: terminale cu şurub; — Compatibil cu centrala de incendiu prin transponder.	**ORB-OP-52028**
2.	**Specificații de performanță şi condiții privind siguranța în exploatare:** — Detectează fumul vizibil produs de materiale care ard încet sau mocnit (exemplu plastic, fum produs de PVC supraîncălzit dar nears); — Dual simultan fum și temperatură; — Marcaj Ex pentru grupa II zona 2; — Temperatura maximă de suprafață T4; — Dacă va fi livrat în protecție intrinsecă, atunci se va livra și bariera de potențial; — Se va livra cu toate accesoriile necesare bunei funcționări.	
3.	**Condiții privind conformitatea cu standarde relevante:** – Conform standarde în vigoare EN 54; EN 60079; EN 60529; EN 60079-0;	
4.	**Condiții de garanție şi postgaranție:** — Producătorul va garanta calitatea și buna funcționare a produsului timp de 24 luni de la punerea în funcțiune sau de 36 luni de la data livrării; — Produsul va corespunde normelor tehnice și standardelor europene.	
5.	**Condiții cu caracter tehnic:** — Vor fi anexate: ▪ instrucțiuni de montaj (scheme de conectare, broșuri, cataloage); ▪ instrucțiuni de exploatare; ▪ buletine de încercări, verificări, probe; ▪ declarație de conformitate.	

PROIECTANT,

CIS GAZ S.A. - ROMÂNIA
CIS GAZ
RO1210493 J19910008382

Orbis I.S.

Optical Smoke Detector

Product overview

Product	I.S. Optical Smoke Detector
Part No.	ORB-OP-52027-APO
Product	I.S. Optical Smoke Detector with flashing LED
Part No.	ORB-OP-52028-APO

Approvals

Product information

The sensing technology in the Orbis I.S. Optical Smoke Detector is significantly di¦erent in design from previous optical smoke detectors.

- Improved sensitivity to black smoke
- Compensation for slow changes in sensitivity
- Extra confirmation of smoke before an alarm signal is given

Technical data

All data is supplied subject to change without notice. Specifications are typical at 24 V, 23°C and 50% RH unless otherwise stated.

Detection principle	*Photo-electric detection of light scattered by smoke particles over a wide range of angles.*
Sampling frequency	*Once every four seconds*
Operating voltage	*14.8 V dc to 28 V dc*
Supply Wiring	*Two wire supply, polarity sensitive*
Polarity reversal	*Not allowed*
Power up time	*< 20 seconds*
Minimum 'detector active' voltage	*12 V*
Power-up surge current at 24 V	*105 µA*
Average quiescent current at 24 V	*85 µA*
Alarm load	*325 Ω in series with a 1.0 V drop*
Minimum holding voltage	*5 V*
Minimum voltage to light alarm LED	*6 V*
Alarm reset voltage	*< 1 V*
Alarm reset time	*One second*
Alarm indicator	*Integral indicator with 360° visibility*
Remote output LED (-) characteristic	*4.7 kΩ connected to negative supply*
Operating and storage temperature	*-40°C to +70°C* *Operating temperature is restricted by the intrinsic safety gas classification.* *Class T5: -40°C to +45°C* *Class T4: -40°C to +60°C* *The detector must be protected from conditions of condensation or icing*
Humidity (no condensation or icing)	*0% to 98% RH*
E¦ect of atmospheric pressure on optical sensor	*Una¦ected by wind*
E¦ect of wind speed	*Insensitive to pressure*
Designed to IP Rating	*IP23D*
Standards & approvals	*EN54-7, CPD, LPCB, MED, LR, DNV-GL, BV, ABS, CCS, KRS, VdS, BOSEC, IECEx, ATEX, PESO and FG*
BASEEFA Cert No.	*BASEEFA06ATEX0007X*
Dimensions	*100 mm diameter x 42 mm height* *100 mm diameter x 50 mm height in base*
Weight	*75 g detector* *135 g detector with base*
Materials	*Housing: White flame-retardant polycarbonate* *Terminals: Nickel plated stainless steel*

36 Brookside Road, Havant
Hampshire, PO9 1JR, UK.
Tel: +44 (0)23 9249 2412
Fax: +44 (0)23 9249 2754
Email: sales@apollo-fire.com
Web: www.apollo-fire.co.uk

© Apollo Fire Detectors Limited 2017

Features

Optical smoke detectors have always been recognised as good detectors for general use. They are regarded as particularly suitable for smouldering fires and escape routes.

The performance of Orbis Marine optical detectors is good in black as well as in white smoke. In this respect Orbis detectors are di¦erent from traditional optical smoke detectors which perform far better in white smoke than in black.

Orbis I.S. Optical Smoke Detectors are also designed to reduce significantly the incidence of false alarms through over-sensitivity to transient phenomena.

Orbis I.S. Optical Smoke Detectors are recommended for use as general purpose smoke detectors for early warning of fires in most areas.

Operation

Orbis I.S. Optical Smoke Detectors work on the well established light scatter principle. The remarkable optical design of the Orbis I.S. Optical Smoke Detector enables it to respond to a wide spectrum of fires.

The sensing chamber contains an optical sensor which measures back-scattered light as well as the more usual forward-scattered light. Sensitivity to black smoke is greatly improved.

The detector is calibrated so that Orbis is highly reliable in detecting fires, but is much less likely to generate false alarms.

The stability of the detector-high reliability, low false alarm rate is further increased by the use of algorithms to decide when the detector should change to the alarm state. This removes the likelihood of a detector producing an alarm as a result of smoke from smoking materials or from another non-fire source.

Classification

Ex ia IIC T5 -40ºC<Ta <+45ºC (T4<60ºC)Ga

EMC Directive 2014/30/EU

The Orbis I.S. Optical Smoke Detector complies with the essential requirements of the EMC Directive 2014/30/EU, provided that it is used as described in this datasheet.

A copy of the Declaration of Conformity is available from the Apollo website: www.apollo-fire.co.uk

Conformity of the Orbis I.S. Optical Smoke Detector with the EMC Directive, does not confer compliance with the directive on any apparatus or systems connected to them.

Construction Products Regulation 305/2011/EU

The Orbis I.S. Optical Smoke Detector complies with the essential requirements of the Construction Products Regulation 305/2011/EU.

A copy of the Declaration of Performance is available from the Apollo website: www.apollo-fire.co.uk.

Marine Equipment Directive 2014/90/EU

The Orbis I.S. Optical Smoke Detector complies with the essential requirements of the Marine Equipment Directive 2014/90/EU.

ATEX Directive 2014/34/EU

The Orbis I.S. Optical Smoke Detector complies with the essential requirements of the ATEX Directive 2014/34/EU.

Orbis I.S. Optical Smoke Detector dimensional drawing

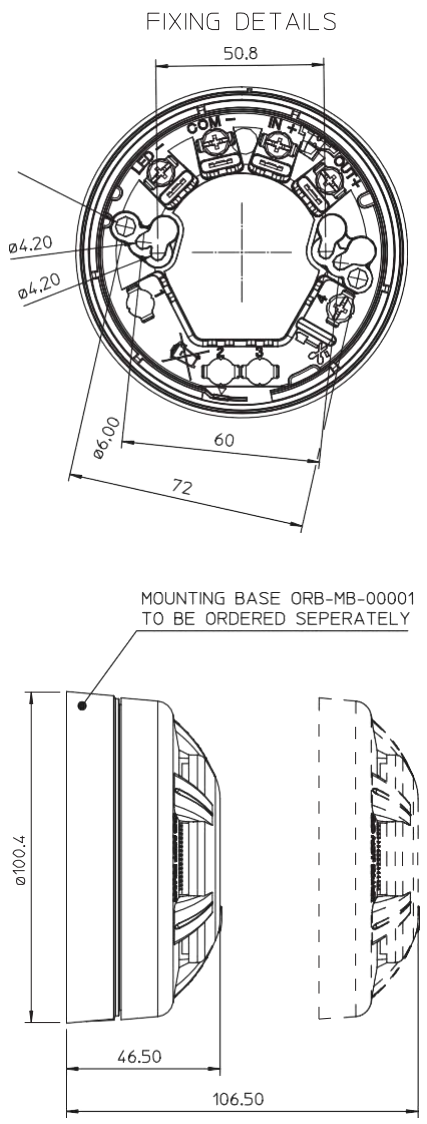

Orbis detectors: LED status

Feature	Description	Red LED status	Yellow LED status
StartUp™	Confirms that the detectors are wired in the correct polarity	Flashes once per second	No Flash
FasTest™	Maintenance procedure, takes just four seconds to functionally test and confirm detectors are functioning correctly	Flashes once per second	No flash
DirtAlert™	Shows that the drift compensation limit has been reached	No flash	Flashes once per second in StartUp (Stops flashing when StartUp finishes)
SensAlert™	Indicates that the sensor is not operating correctly	No flash	Flashes every four seconds (Flashes once per second in StartUp)
Normal operation	At the end of StartUp and FasTest (without flashing LED as standard)	No flash	No flash
Flashing LED version	Detectors red LED flashes in normal operation (at the end of FasTest)	Flashes every four seconds	No flash

This page has intentionally been left blank

Fişă tehnică: E-DREx - Doză ramificaţie Ex.

Nr. crt.	Specificaţiile tehnice ofertate	Producător - Denumire
0	1	2
1.	**Parametrii tehnici şi funcţionali:** — Curent nominal : 6A - 10A (conform proiect); — Şir de cleme : Conform proiect; — Grad de protecţie : IP54; — Temperatură de lucru : -25°C...+50°C; — Material protecţie : Metalic; — Introducătoare de cablu : Pentru medii cu pericol de explozie; — Tipul de protecţie : grupa II zona 2; — Tensiune nominală : 230 Vca; — Culoare : Gri, negru.	**SCAME**
2.	**Specificaţii de performanţă şi condiţii privind siguranţa în exploatare:** – Se montează mecanic în zone cu pericol de explozie.	
3.	**Condiţii privind conformitatea cu standarde relevante:** – EN 60679; – EN 60529.	
4.	**Condiţii de garanţie şi postgaranţie:** — Producătorul va garanta calitatea şi buna funcţionare a produsului timp de 24 luni de la punerea în funcţiune sau de 36 luni de la data livrării; — Produsul va corespunde normelor tehnice şi standardelor europene.	
5.	**Condiţii cu caracter tehnic:** — Vor fi anexate: ▪ instrucţiuni de montaj (scheme de conectare, broşuri, cataloage); ▪ instrucţiuni de exploatare; ▪ buletine de încercări, verificări, probe; ▪ declaraţie de conformitate.	

PROIECTANT,

CIS GAZ S.A. - ROMÂNIA
CIS GAZ
RO12210493 J19910008382

Fişă tehnică: E-ESD - Buton oprire de urgenţă.

Nr. crt.	Specificaţiile tehnice ofertate	Producător - Denumire
0	1	2
1.	**Parametrii tehnici şi funcţionali:** — Buton cu reținere de culoare roșie montat în cutie; — Echipat cu etichetă inscripționată galbenă; — Protecție împotriva declanșărilor accidentale; — Tensiune nominală de ținere la impuls: 6kV; — Tensiune de izolare minim 600 Vca; — Curent nominal contacte 6A; — Anduranță mecanică: 300.000 cicluri; — Tensiune nominal: 230/400V; 50/60Hz-AC; — Montaj: pe ușă/lateral minishelter; — Contact auxiliar va fi preluate în PLC; — Grad de protecție: minim IP65; — Domeniu de temperatura: -25°C...+50°C.	**Schneider - XB4BS8445**
2.	**Specificaţii de performanţă şi condiţii privind siguranţa în exploatare:** — Protecția terminalelor la atingere cu mâna; — Carcasă din policarbonat cu IP65; — Parte frontală clasa 2.	
3.	**Condiţii privind conformitatea cu standarde relevante:** – EN 60947 - 3 – EN 60529	
4.	**Condiţii de garanţie şi postgaranţie:** — Producătorul va garanta calitatea și buna funcționare a produsului timp de 24 luni de la punerea în funcțiune sau de 36 luni de la data livrării. — Produsul va corespunde normelor tehnice şi standardelor europene.	
5.	**Condiţii cu caracter tehnic:** — Vor fi anexate: • instrucțiuni de montaj (scheme de conectare, broșuri, cataloage); • instrucțiuni de exploatare; • buletine de încercări, verificări, probe; • declarație de conformitate.	

PROIECTANT,

CIS GAZ S.A. - ROMÂNIA
CIS GAZ
RO1210493 J19910008326

Fişă tehnică produs

Specificatii

Oprire de urgenta rosie Ø40, oprire Ø22 eliberare siguranta 1NC+1NO

XB4BS8445

Principale

gama de produse	Harmony XB4
Tip produs sau componenta	Emergency switching off push-button Emergency stop push-button
nume scurt al dispozitivului	XB4
material rama	Metal cromat
material inel de fixare	Zamak
diametrul de montaj	22,5 mm
cantitate indivizibila de vanzare	1
forma a capului unitatii de semnalizare	Rotund
tip de operator	acţiune declanşator şi reţinere mecanică
tip cap	Standard
resetare	Rotire pentru eliberare
profil utilizator	Rosu ciupercă Ø 40 mm, nemarcat
operare contacte	Decuplare lenta
conexiuni - borne	Borne cu surub, <= 2 x 1.5 mm² cu pini conformitate cu IEC 60947-1 Borne cu surub, >= 1 x 0.22 mm² fara terminale de cablu conformitate cu IEC 60947-1

Suplimentare

inaltime	47 mm
latime	40 mm
adancime	82 mm
descriere borne ISO nr. 1	(13-14)NO
greutate neta	0,13 kg
rezistenta la spalare cu presiune inalta	7000000 Pa la 55 °C, distanta : 0.1 m
tip si compozitie contacte	1 NO + 1 NC
utilizare contacte	Contacte standard
deschidere pozitiva	Cu conformitate cu IEC 60947-5-1 anexa K
cursa de operare	1,5 mm (schimbare stare electrică NC) 2,6 mm (modificarea stării electrice NO) 4,3 mm (cursă totală)
forta de actionare	44 N
durabilitate mecanica	300000 cic

Declinare de responsabilitate: Această documentaţie nu se substituie şi nu trebuie utilizată pentru stabilirea adecvării sau fiabilităţii acestor produse pentru aplicaţii utilizator

cuplu de strangere	0,8…1,2 N.m conformitate cu IEC 60947-1
forma a capului surubului	Cruce compatibil cu Philips nr. 1 surubelnita Cruce compatibil cu pozidriv No 1 surubelnita Perforat compatibil cu plat Ø 4 mm surubelnita Perforat compatibil cu plat Ø 5.5 mm surubelnita
Material contacte	Aliaj de argint (Ag/Ni)
protectie la scurtcircuit	10 A cartuş fuzibil tip gG conformitate cu SR EN 60947-5-1
[Ith] curent termic conventional in aer liber	10 A conformitate cu SR EN 60947-5-1
[Ui] tensiune nominala de izolatie	600 V (grad de poluare 3) conformitate cu IEC 60947-1
[Uimp] tensiune de tinere la impuls	6 kV conformitate cu IEC 60947-1
[Ie] curent nominal de utilizare	3 A la 240 V, AC-15, A600 conformitate cu SR EN 60947-5-1 6 A la 120 V, AC-15, A600 conformitate cu SR EN 60947-5-1 0,1 A la 600 V, DC-13, Q600 conformitate cu SR EN 60947-5-1 0,27 A la 250 V, DC-13, Q600 conformitate cu SR EN 60947-5-1 0,55 A la 125 V, DC-13, Q600 conformitate cu SR EN 60947-5-1 1,2 A la 600 V, AC-15, A600 conformitate cu SR EN 60947-5-1
durabilitate electrica	1000000 cic, AC-15, 2 A la 230 V, rata de functionare <3600 cic/h, factor de sarcina: 0,5 conformitate cu IEC 60947-5-1 anexa C 1000000 cic, AC-15, 3 A la 120 V, rata de functionare <3600 cic/h, factor de sarcina: 0,5 conformitate cu IEC 60947-5-1 anexa C 1000000 cic, AC-15, 4 A la 24 V, rata de functionare <3600 cic/h, factor de sarcina: 0,5 conformitate cu IEC 60947-5-1 anexa C 1000000 cic, DC-13, 0,2 A la 110 V, rata de functionare <3600 cic/h, factor de sarcina: 0,5 conformitate cu IEC 60947-5-1 anexa C 1000000 cic, DC-13, 0,5 A la 24 V, rata de functionare <3600 cic/h, factor de sarcina: 0,5 conformitate cu IEC 60947-5-1 anexa C
securitatea electrica IEC 60947-5-4	Λ < 10exp(-6) la 5 V si 1 mA în mediu curat conformitate cu SR EN 60947-5-4 Λ < 10exp(-8) la 17 V si 5 mA în mediu curat conformitate cu SR EN 60947-5-4
prezentare dispozitiv	Produs complet

Mediu

tratament protector	TH
temperatura ambietala pentru depozitare	-40…70 °C
temperatura ambientala de functionare	-40…70 °C
clasa de protectie la electrocutare	Clasa I conforming to IEC 60536
grad de protectie IP	IP66 conformitate cu SR EN 60529 IP67 IP69 IP69K
grad de protectie NEMA	NEMA 13 NEMA 4X
grad de protectie IK	IK06 conforming to IEC 50102
standarde	IEC 60204-1 IEC 60947-1 UL 60947-1 IEC 60364-5-53 ISO 13850 CSA C22.2 No 15 SR EN 60947-5-1 SR EN 60947-5-4 JIS C8201-5-1 IEC 60947-5-5 JIS C8201-1
certificari produs	CSA LROS (Lloyds register of shipping) BV listat de UL DNV

rezistenta la vibratii	5 gn (f= 2...500 Hz) conforming to IEC 60068-2-6
rezistenta la socuri	30 gn (durata = 18 ms) pentru half sine wave acceleration conformitate cu IEC 60068-2-27 50 gn (durata = 11 ms) pentru half sine wave acceleration conformitate cu IEC 60068-2-27

Unitati de ambalare

Unitate de masura pentru prima forma de impachetare	PCE
Număr de produse în pachet	1
Inaltime prima forma de impachetare	5,200 cm
Latime prima forma de impachetare	4,400 cm
Lungime prima forma de impachetare	8,800 cm
Greutate colet(Lbs)	132,000 g
Unitate de masura pentru a doua forma de impachetare	S03
Numar unitati in a doua forma de impachetare	80
Inaltime a doua forma de impachetare	30,000 cm
Latime a doua forma de impachetare	30,000 cm
Lungime a doua forma de impachetare	40,000 cm
Greutate a doua forma de impachetare	11,100 kg
Unitate de masura pentru a treia forma de impachetare	P06
Numar unitati in a treia forma de impachetare	640
Inaltime a treia forma de impachetare	75,000 cm
Latime a treia forma de impachetare	60,000 cm
Lungime a treia forma de impachetare	80,000 cm
Greutate a treia forma de impachetare	99,324 kg

Garanție contractuală

Garantie	18 luni

Environmental Data

Schneider Electric isi propune sa atinga nivelul Net Zero pana in 2050 prin parteneriate la nivelul lantului de aprovizionare, materiale cu impact mai redus si circularitate, prin campania „Use Better, Use Longer, Use Again" pentru a extinde durata de viata a produselor si reciclabilitatea.

Environmental Data explicate

Cum evaluam sustenabilitatea produselor

Amprenta de mediu

Amprenta de carbon totala pe durata de viata	1
Profilul de mediu pentru produs (PEP)	Profilul ambiental al produsului

Use Better

Materiale si ambalare

Pachet cu carton reciclabil	Nu
Ambalaj fara plastic	Nu
Directiva RoHS UE	Conformitate proactivă (Produs în afara domeniului de aplicare a EU RoHS)

Use Again

Reambalare si refabricare

Profil circularitate	Informatii privind sfarsitul duratei de viata
Preluare la sfarsitul duratei de viata	No
WEEE Label	În Uniunea Europeana, produsele trebuie reciclate respectand sistemul specific de colectare a deseurilor si nu trebuie sa ajunga in pubelele de colectare a deseurilor menajere.

Dimensions Drawings

Dimensions

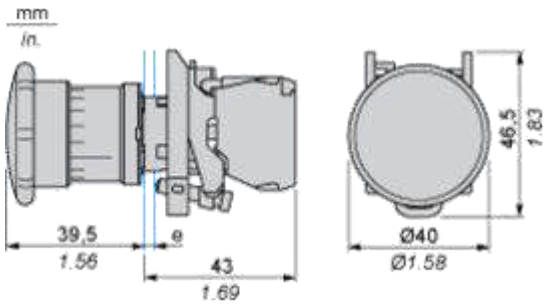

e : clamping thickness: 1 to 6 mm / 0.04 to 0.24 in.

Mounting and Clearance

Panel Cut-out for Pushbuttons, Switches and Pilot Lights (Finished Holes, Ready for Installation)

Connection by Screw Clamp Terminals or Plug-in Connectors or on Printed Circuit Board	Connection by Faston Connectors
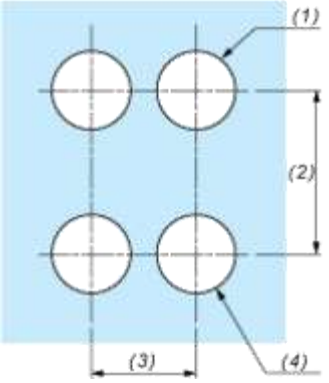	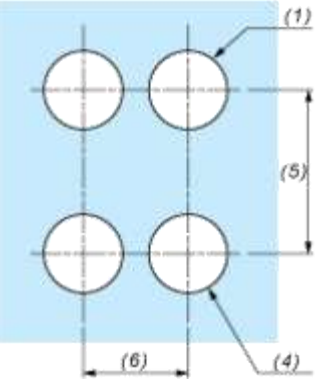

(1) Diameter on finished panel or support
(2) 40 mm min. / 1.57 in. min.
(3) 30 mm min. / 1.18 in. min.
(4) Ø 22.5 mm / 0.89 in. recommended (Ø 22.3 mm $_{0}^{+0.4}$ / 0.88 in. $_{0}^{+0.016}$)
(5) 45 mm min. / 1.78 in. min.
(6) 32 mm min. / 1.26 in. min.