Distributed by Nuova GmbH
Germany
www.nuova.de

Product Specification of:

Medical Oxygen Sensor

Type: M-15M

Part Number: 410823

Nuova ID: E-15/M

Digitally signed by Grabazei Alexandru
Date: 2026.05.26 09:40:23 EEST
Reason: MoldSign Signature
Location: Moldova
MOLDOVA EUROPEANĂ

RoHS compliant and SVHC free

Meets the applicable requirements of ISO 80601-2-55

Comes with CE marking. further regulatory registrations available upon request

Produced under EN ISO 13485 Quality Management System

DOCUMENT PURPOSE

The purpose of this document is to present the performance specification and key features of the sensor.

This document should be used in conjunction with the Operating Manual of the instrument and the Product Safety Data Sheet of the sensor.

KEY FEATURES

Long-life galvanic gas sensor with high signal stability at low cross sensitivity to anesthesia gases combined with superior linearity over the entire measurement range.

High Signal Stability | Superior Linearity | Wide Measurement Range | Long Lifetime

IT Dr. Gambert GmbH .: Hinter dem Chor 21 .: 23966 Wismar .: Germany

Phone: +49 (0)3841 220 050 .: Fax: +49 (0)3841 220052 2 .: E-Mail: info@itg-wismar.de **www.itg-wismar.de**

TECHNICAL SPECIFICATIONS

MEASUREMENT

Operating Principle:	Partial pressure electrochemical cell	
Measurement Range:	0 … 100 Vol.%O_2	
Initial Output Signal:	8 … 12 mV	at dry ambient air
Output Signal Range:	5 … 15 mV	
Response Time t90:	< 12 s	
Signal Drift (long-term):	≤ ± 1 Vol.%O_2/month	at ambient air
Linearity Error:	≤ ± 3 %	at 100 Vol.%O_2 applied for 5 min
Zero Signal Offset:	≤ 0.3 Vol.%O_2	at 100 Vol.%N_2 applied for 5 min
Repeatability Error:	≤ ± 1 Vol.%O_2	at 100 Vol.%O_2 applied for 5 min
Influence of Gas Humidity:	- 0.03 % of signal per %rH	
Signale Temperature Compensation	NTC on sensor PCB	
Cross-Sensitivity:	according DIN EN ISO 80601-2-55	

ELECTRICAL

Electrical Connector	3.50 mm Mono Jack
Recommended Load Resistor:	≥ 10 kOhm

MECHANICAL

Weight:	≤ 28 g
Material in Contact with Media:	PA, PPS, PTFE, Stainless Steel NBR
Gas Connector:	fits for M16x1 DIN 13 or 5/8-24 UNEF

ENVIRONMENTAL

Operating Temperature Range:	10 … 40 °C	
Ambient Pressure Range:	700 … 1250 hPa	
Ambient Humidity Range:	up to 100 %rH	non-condensing

LIFETIME

Expected Operating Life:	3 years	at ambient air, depending on application
Nominal Sensor Life:	750 000 Vol.%h O_2	at ambient air, depending on application

Important Note: All characteristics are based on conditions at 25 °C, 50 %rH, 1013 hPa and a gas flow of > 2.5 L_S/min. For sensor performance data under other conditions, contact ITG.

IT Dr. Gambert GmbH .: Hinter dem Chor 21 .: 23966 Wismar .: Germany

Phone: +49 (0)3841 220 050 .: Fax: +49 (0)3841 220052 2 .: E-Mail: info@itg-wismar.de **www.itg-wismar.de**

STORAGE CONDITIONS IN UNOPENED ORIGINAL PACKAGE

Ambient Temperature Range:	15 … 25 °C	recommended
	-20 … 50 °C	maximum (≤ 10 h)
Ambient Pressure Range:	700 … 1250 hPa	
Ambient Humidity Range:	50 … 100 %rH	recommended non-condensing
	0 … 30 %rH	maximum one week

RELATED PRODUCTS

Product	Part Number	Other Specifics
O_2 Sensor M-15	41 00 23	—
O_2 Sensor M-15T	47 00 28	translucent housing
O_2 Sensor M-15M	41 08 23	—

Cleaning and Disinfection

The sensor outer housing can be cleaned with a dry wipe. Do not wipe the sensor's gas entrance side. Do not use any chemical disinfectant or sanitizer on the sensor.

Poisoning

ITG sensors are designed to operate in a wide range of environments. For optimal sensor lifetime and performance it is important that exposure to high concentrations of solvent vapors is avoided during storage, installation into instruments and operation of the sensor. Do not use adhesives directly on or near the sensor as the solvents may cause stress corrosion on the plastic parts.

Intended Use

The electrochemical oxygen sensors for use in medical technology are used as accessories with a limited shelf life exclusively in conjunction with other medical products (ventilators, incubators, anesthesia machines, portable oxygen monitors, oxygen therapy devices and gas mixing units) so that they can fulfill the manufacturer`s intended purpose.

The oxygen sensors measure the oxygen partial pressure in gas mixtures.
Commissioning and use is carried out exclusively by expert clinic or service personnel. Direct contact with these items occurs during installation or maintenance by trained personnel.

Stabilisation Time

When installing a new sensor refer to the instrument manual for stabilization time before calibration.

If not specified otherwise wait at least 15 minutes to ensure the sensor has stabilized in the instrument.

Calibration Interval

ITG sensors are designed to have minimal signal drift over their functional lifetime. For optimal performance and maximum measurement accuracy however they should be calibrated before each use.

IT Dr. Gambert GmbH .: Hinter dem Chor 21 .: 23966 Wismar .: Germany

Phone: +49 (0)3841 220 050 .: Fax: +49 (0)3841 220052 2 .: E-Mail: info@itg-wismar.de **www.itg-wismar.de**

If the Sensor is dropped

If a sensor is dropped, please check for visible mechanical damage of the sensor or if the sensor is leaking electrolyte. If this is the case, do not try to install the sensor into the device. Take safety precautions and immediately dispose the cell.

If the sensor shows no visible damage it should be placed in quarantine for at least 24 hours. Afterwards a follow-up check made by a two point calibration should be done.

Installation in Device

A gas tight sealing is ensured when the sensor is screwed in hand-tight. Don't use any mechanical tools to install the sensor. Using excessive force may damage the sensor.
Optimal mounting position of the sensor is when the gas sensing area faces downwards. A horizontal position is acceptable. It is not recommended to use the sensor with the gas sensing area facing upward.
Connection should be made via recommended electrical and mechanical connectors only. The specified load resistance must be taken into account. Soldering the sensor will damage it and void the warranty. Please contact ITG for further information.
Since temperature has an influence on the output signal it is not advisable to place any heat or vibration sources (i.e. electric- pumps or valves, coolers, etc.) in close proximity to the cell.
Avoid proximity of the cell to any EMC radiating units as those emit frequencies which might interfere with the sensor's electrical connection and connecting cable.

RFI/EMI Susceptibility

ITG sensors contain metal parts and might be susceptible to RFI or EMI. Before use in MRI environments please contact ITG for further information.

Disposal

At the end of the sensors lifetime the sensor should not be disposed of in normal public waste as it may contain hazardous materials and caustic electrolyte (for more information refer to the PSDS). Please contact your local authorities for environmental legislation to relevant local waste disposal.

IT Dr. Gambert GmbH .: Hinter dem Chor 21 .: 23966 Wismar .: Germany

Phone: +49 (0)3841 220 050 .: Fax: +49 (0)3841 220052 2 .: E-Mail: info@itg-wismar.de **www.itg-wismar.de**

TECHNICAL DRWAING

Sensor	ITG Part number	Color			Electrical pin assignment	
		Cap	Housing	Threaded ring	Pin 1	Pin 2
M-15M	410823	white	white	white	plus (+)	minus (-)

Top view

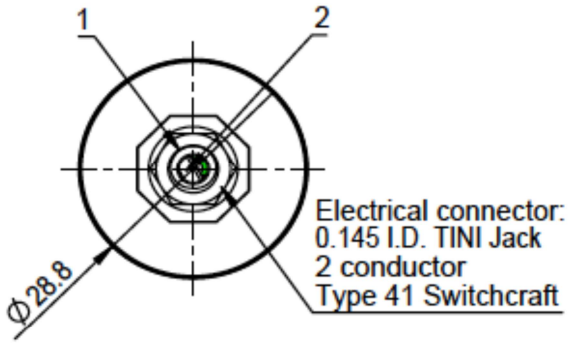

Bottom view

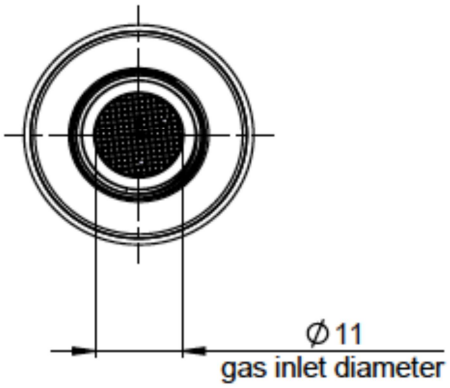

Front view

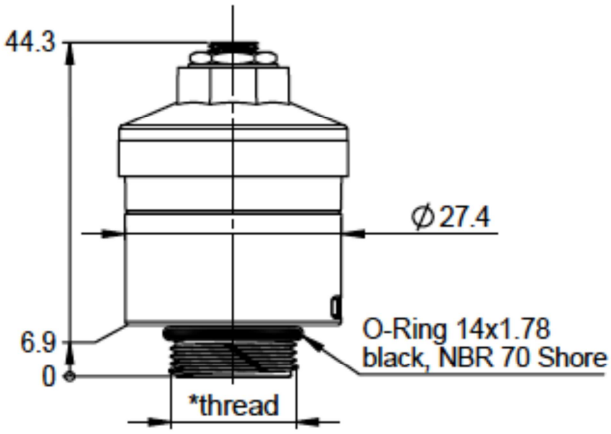

* thread is compatible with M16x1 and 5/8-24 UNEF

Dimension unit: mm
Dimension tolerances: linear ±0.5 mm , diameter ±0.3 mm

IT Dr. Gambert GmbH .: Hinter dem Chor 21 .: 23966 Wismar .: Germany

Phone: +49 (0)3841 220 050 .: Fax: +49 (0)3841 220052 2 .: E-Mail: info@itg-wismar.de **www.itg-wismar.de**