CUTTING EDGE

sense of innovation

ENGINEERED AND MADE IN FRANCE

Synthesis®

Acrylic Monofocal

NEW

Digitally signed by Bolea Petru
Date: 2023.03.24 15:38:32 EET
Reason: MoldSign Signature
Location: Moldova

Synthesis®
Acrylic Monofocal

CUTTING-EDGE TECHNOLOGY IOL

Synthesis® is a new acrylic monofocal intraocular lens, developed and manufactured by CUTTING EDGE, expert in IOLs design.

Cutting Edge builds experienced and dedicated teams to design, prototype and manufacture high-quality Intraocular Lenses. Our state-of-the-art facility honours the quality and process sophistication of the medical device industry.

The proximity of our Research & Development team to our manufacturing operations is truly significant for building close links and in using a results-orientated approach.

Cutting Edge masters all manufacturing stages in house, from machining to optical and mechanical tests, through to packaging and international logistics.

Synthesis was engineered by a team who fully believe that the human eye is both fragile and precious and requires the utmost in precision, “savoir-faire” and faultless industrial quality.

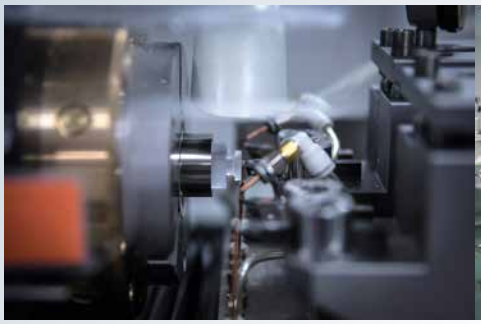

Synthesis®

Acrylic Monofocal

ENGINEERED AND MADE IN FRANCE

THE LATEST ALL-IN-ONE INNOVATIONS PLATFORM

SAFETY

- **Material**
  Clear or blue-light-filtering option
- **Design**
  - 4 point fixation haptics
  - 360˚ C-Edge+ square edges
  - Orientation notch on optic edge
- **Truly MICS enhanced characteristics**

REPRODUCIBILITY

- **Optic**
  - 6 mm diameter optic
  - Anatomically friendly with 3 overall diameter
  - Aberration neutral Aspheric lens
  - Posterior shift features
- **Injection**
  - Latest injection system options

From -10.0 D to +40.0 D

- 1 D increment between -10.0 D to +10.0 D & +31.0 D to +40.0 D
- 0.5 D increment between +10.0 D to 30.0 D

OPTICAL QUALITY

- MTF curves exceed ISO 13485 norm
- UV and blue-light-filtering option

CUTTING EDGE

SAFETY

Synthesis®
Acrylic Monofocal

MATERIAL

- Acrylic copolymer successfully **used for more than 17 years** in ophthalmology
- **Ultraviolet absorption**
- **Blue-light-filtering** option (yellow)

DESIGN

- **4 point** fixation haptics
- **3 overall diameters** to fit the capsular bag:
  - 11 mm from -10.0 D to +15.0 D
  - 10.7 mm from +15.5 D to 22.0 D
  - 10.5 mm from +22.5 D to +40.0 D
- **Enhanced C-Edge+** ≤ 5microns 360° square edge

Overall diameter
- 11 mm
- 10,7 mm
- 10,5 mm

C-EDGE+ SCANNING ELECTRON MICROSCOPY IMAGES

MAGNIFICATION 50X

2 mm

MAGNIFICATION 200X

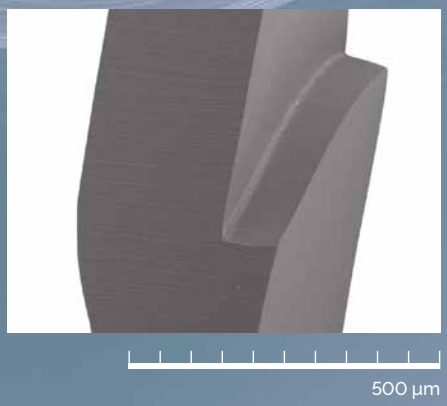

500 µm

MAGNIFICATION 500X

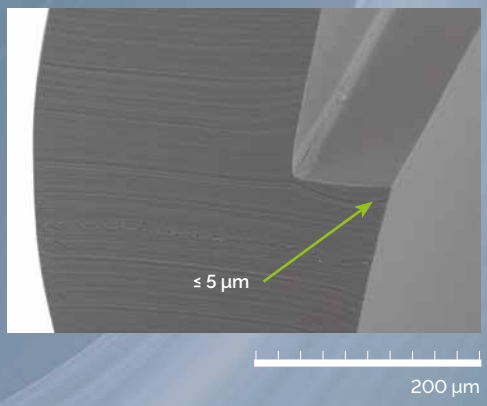

200 µm

C-EDGE+

REPRODUCIBILITY

OPTIC

- **6 mm optic** across the power range
- **Orientation notch** at the optic edge
- **Posterior shift:** vaulted design for excellent capsular bag adhesion
- **Aberration neutral**
  Aspheric profile
- **Homogeneous surface** across the power range for consistent injection forces regardless of IOL diopter.

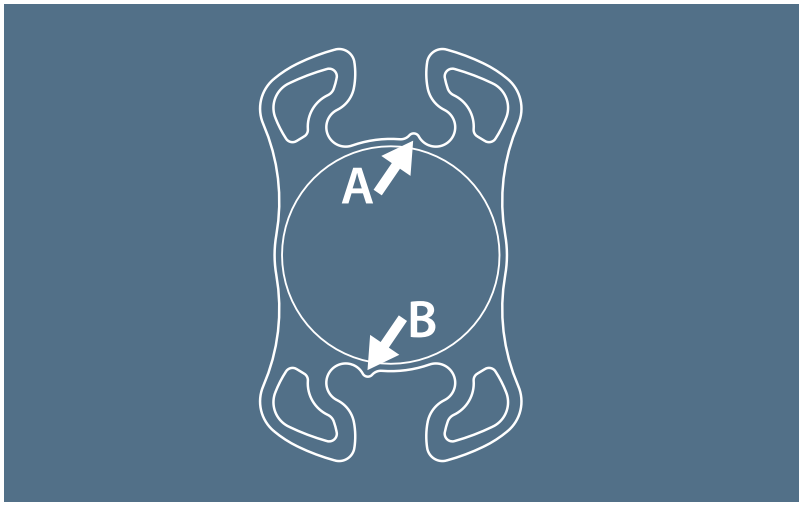

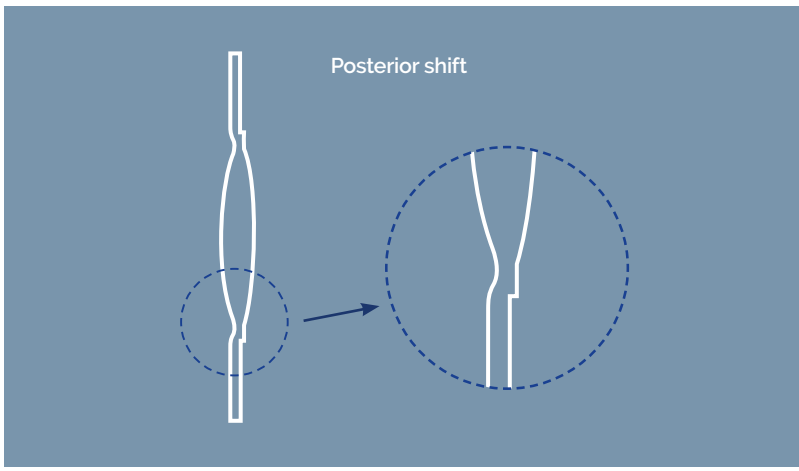

Synthesis®
Acrylic Monofocal

CE
0197

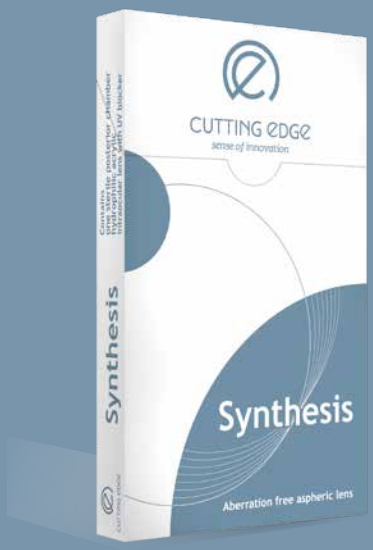

OPTICAL QUALITY

MTF (MODULATION TRANSFER FUNCTION)

Synthesis exceeds ISO 11979-2 standard requirement for optical properties and test methods (0.43 at 100 cycle/mm) at all light conditions and pupil diameter.

SYNTHESIS® MTF IN DAY LIGHT CONDITIONS
(3 mm pupil diameter)

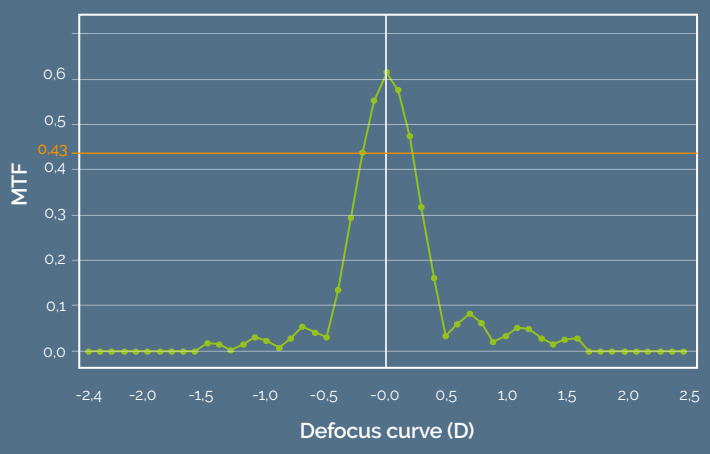

SYNTHESIS® MTF IN DIM LIGHT CONDITIONS
(4.5 mm pupil diameter)

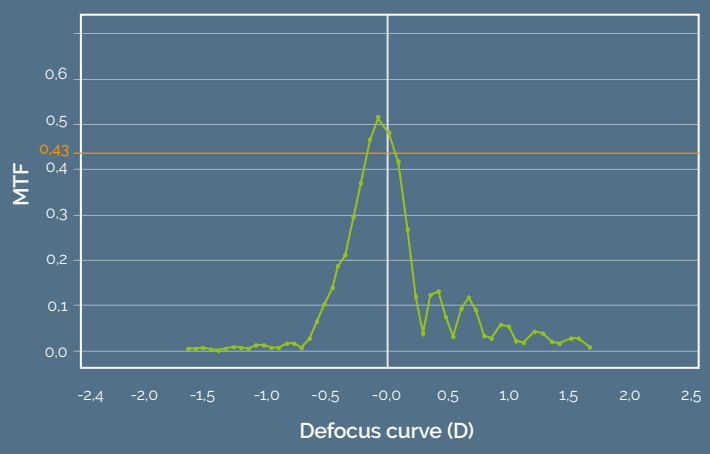

SPECTRAL TRANSMISSION

Synthesis Yellow filters 40% of blue light at 450nm wavelengh

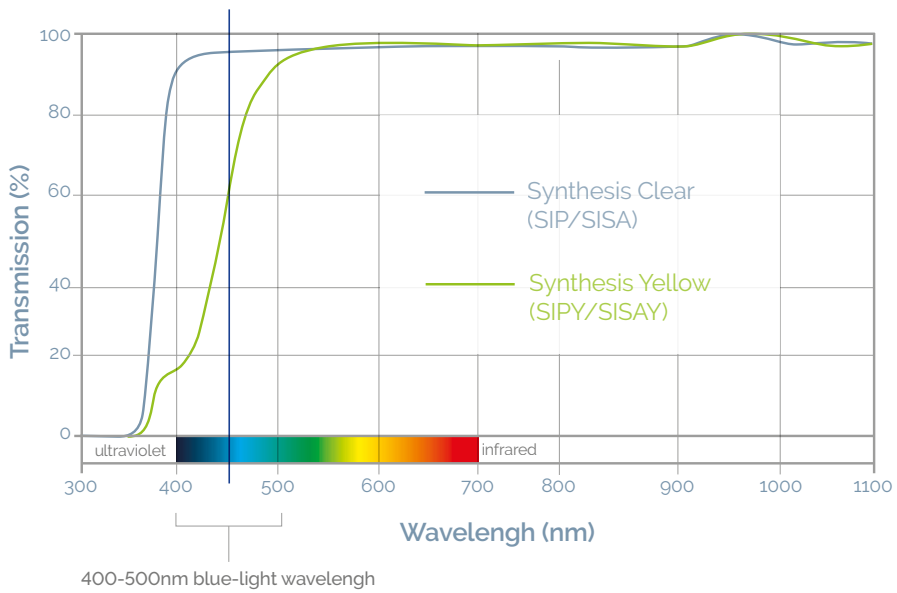

TECHNICAL SHEET

DESIGNATION	SPECIFICATIONS
Optic diameter	6 mm across the power range (0.0 D to 30.0 D)
Diopter Range	1 D increment between -10.0 D to +10.0 D & +31.0 D to +40.0 D 0.5 D increment between +10.0 D to +30.0 D
Ordering information	Stock items between 0.0 D to 35.0 D On-order (4 weeks lead-time) between -10.0 D to -1.0 D & 36.0 D to 40.0 D
Total diameter	From -10.0 D to 15.0 D: 11.0 mm From 15.5 D to 22.0 D: 10.7 mm From 22.5 D to 30.0 D: 10.5 mm
Design	4 point-fixation, C-Edge+ ≤ 5 microns
Angulation	0°, posterior-shift feature
Optic	Aspheric aberration-neutral
Biometry	SRK/T: A = 118.851 Haigis: a0 = 1.2228 (with a1 = 0.4 & a2 = 0.1) Hoffer-Q: pACD = 5.4595 Holladay 1: SF = 1.7064
References	Synthesis *CLEAR* Preloaded: **SIP** Synthesis *YELLOW* Preloaded: **SIPY** Synthesis *CLEAR* IOL: **SISA** Synthesis *YELLOW* IOL: **SISAY**

INJECTION SYSTEMS

		Brands	References	Wound-assisted recommended incision	In-the wound recommended incision	In-the-bag recommended incision
	Preloaded	Medicel Accujet™ PRO 1.6	**LP604550P** (box of 10)	1.6 mm	1.8 mm	2.0 mm
	Cartridge loading	Medicel Viscojet™ BIO 1.8	**LP604350C** (box of 10)	1.8 mm	2.0 mm	2.2 mm

CUTTING EDGE
sense of innovation

SENSE OF EXCELLENCE
SENSE OF INNOVATION
SENSE OF PARTNERSHIP
SENSE OF ETHICS

CUTTING EDGE HEADQUARTERS
770 rue Alfred Nobel - Immeuble le Nobel
34000 Montpellier - France

CUTTING EDGE MANUFACTURING
580 rue Max Planck - 31670 Labège - France

KESTREL OPHTHALMICS LTD
Unit 9 Cabot Business Village, Holyrood Close, Poole, Dorset, BH17 7BA - United Kingdom
Tel. +44 (0) 1202 696963

CUTTING EDGE SURGICAL
7012Q Local Avinguda Manuel Girona - 08860 Casteldefels - España
Tel. +34 658 208 691

www.cutting-edge.eu - info@cutting-edge.eu

Design couleur-citron.com

BR-004-02/10.23.2018-EN

Reserved for health care professionals. Please refer to the operating instructions.

CUTTING EDGE

sense of innovation

ENGINEERED AND MADE IN FRANCE

Synthesis® Toric

High
precision

CUTTING EDGE
sense of innovation

INNOVATION IN ACTION

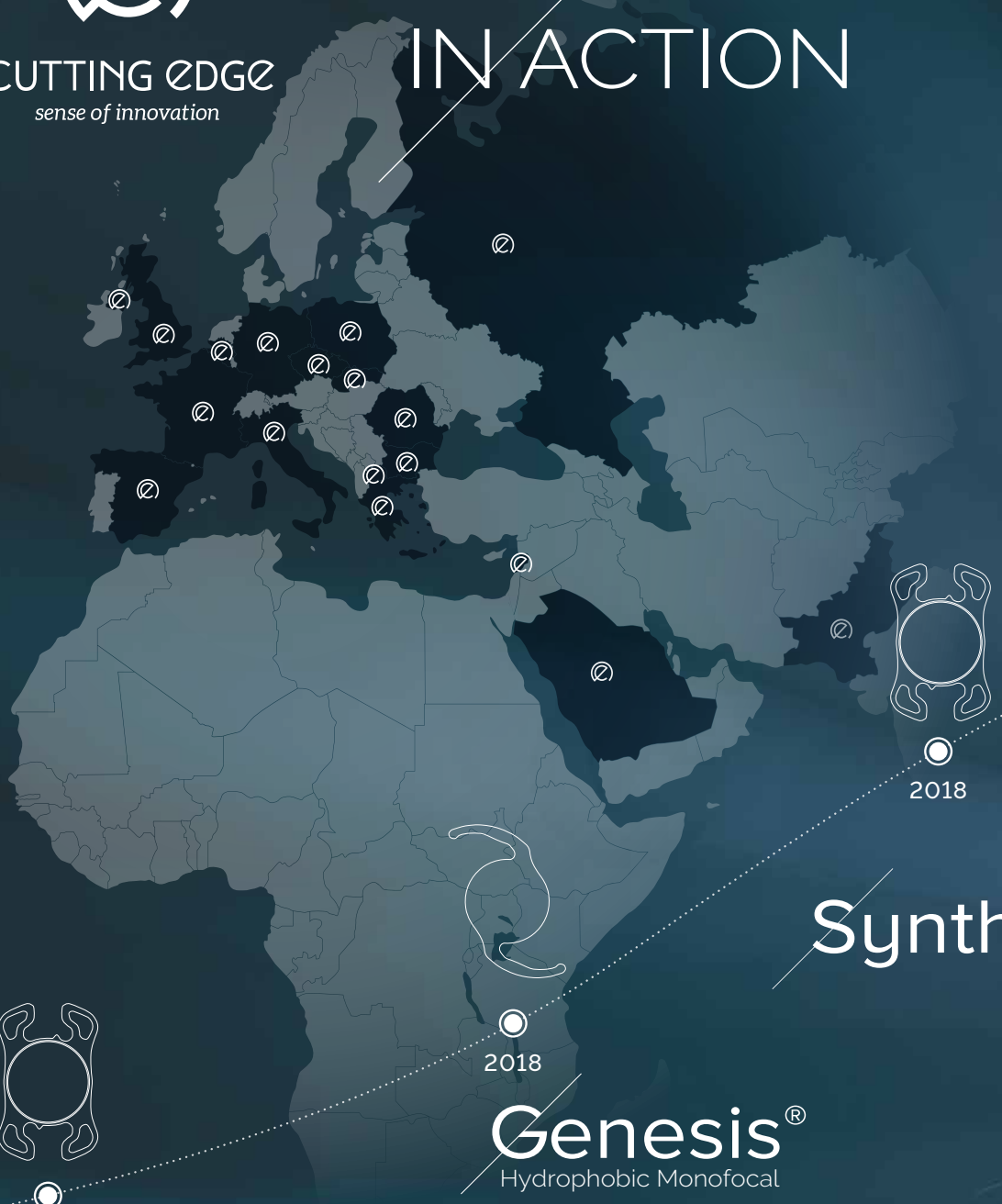

2018

Synthesis®+
EDOF

2018

Genesis®
Hydrophobic Monofocal

2017

Synthesis®
Acrylic Monofocal

CUTTING EDGE

Synthesis® Toric

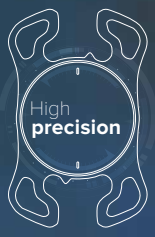

2019

The **Synthesis® Toric** is engineered by a Research and Development team experienced and dedicated to the design and manufacture of high-quality intraocular lenses.

The **Synthesis® Monofocal**, **Synthesis® ⊕ EDOF** and **Synthesis® Toric** comprise of a unique family of micro-incision IOLs designed for the health care professional and to make a contribution to patient well-being.

Managing astigmatism is made easier by combining the strengths of: a proven rotational stability IOL platform, a large combination of sphere/cylinder options and the latest intuitive **Synthesis® Toric** online calculator.

ASTIGMATISM
PATIENT CARE

- **Astigmatism needs to be treated** to reduce the dependency on glasses for distance vision.[1]
- **78% of the cataract patient population present with corneal astigmatism ≥ 0,5 D.**[2]

Distribution of preoperative astigmatism in patients undergoing cataract surgery (N=110,468)[2]

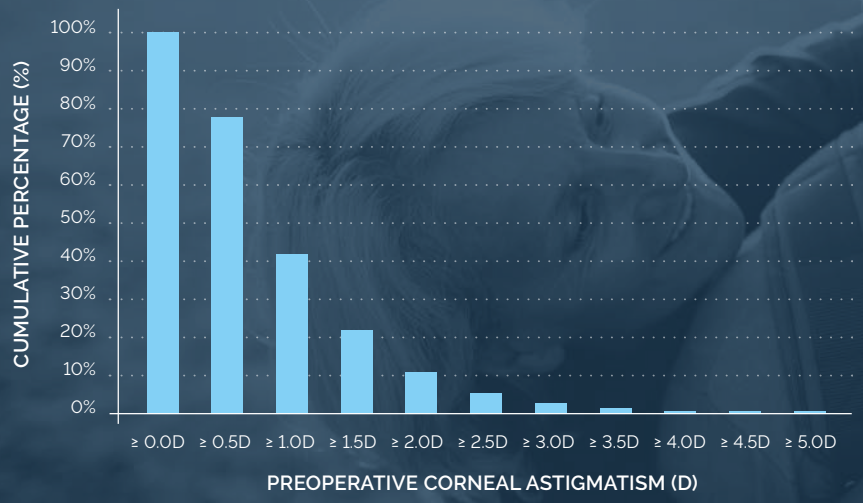

TORIC IOLS CAN OFFER AN EFFECTIVE SOLUTION.[4]

THE ADOPTION AND USAGE OF TORIC IOLS REMAIN RELATIVELY LOW DEPENDING ON THE COUNTRY, RANGING FROM (4 to 9%).[3]

Takes into consideration all sources of astigmatism [5]

Utilises the latest generation online calculator [6]

Offers a large combination of sphere/cylinder

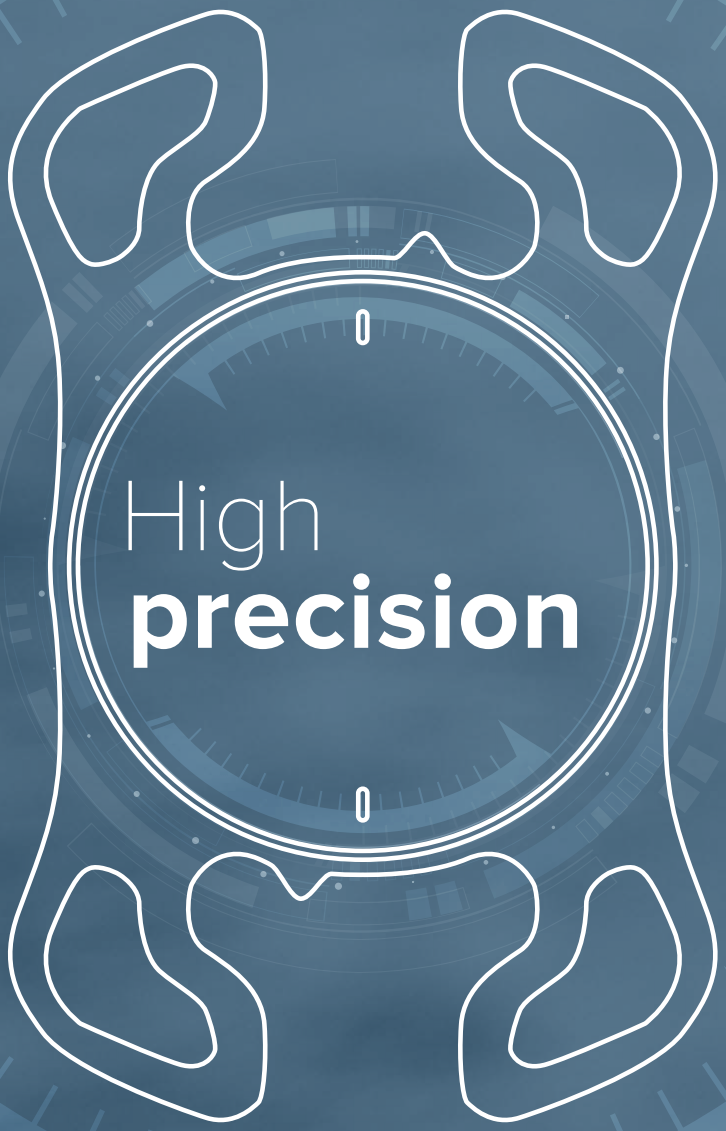

High **precision**

Ensures rotational stability [7]

Minimises surgically induced astigmatism [8]

CUTTING EDGE

NEXT GENERATION
ONLINE CALCULATOR

- **Takes into account posterior corneal astigmatism.**
  - Ignoring posterior corneal astigmatism may lead to the incorrect estimation of the total corneal astigmatism.[5]

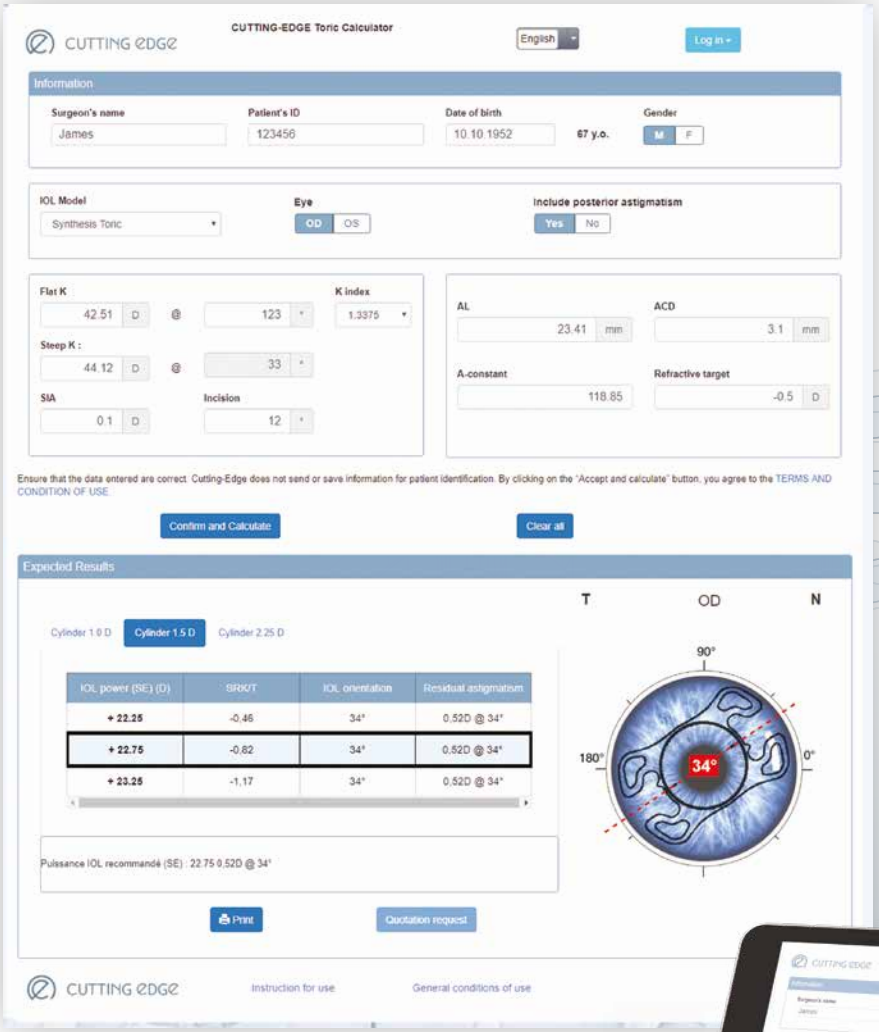

toriccalc.cutting-edge.fr

CUTTING EDGE

CLINICAL RESULTS
ON ROTATIONAL STBILITY

- **Primary objective:**
  Synthesis 11 mm platform rotational stability analysis with 4 months follow-up.[9]

- **Prospective monocentric clinical study.**

- **Clinically proven rotational stability:**
  93% of patients with less than 5° rotation from surgery day (D0) over a 4 month follow-up period.
  Average rotation of 2.93° at 4 months.

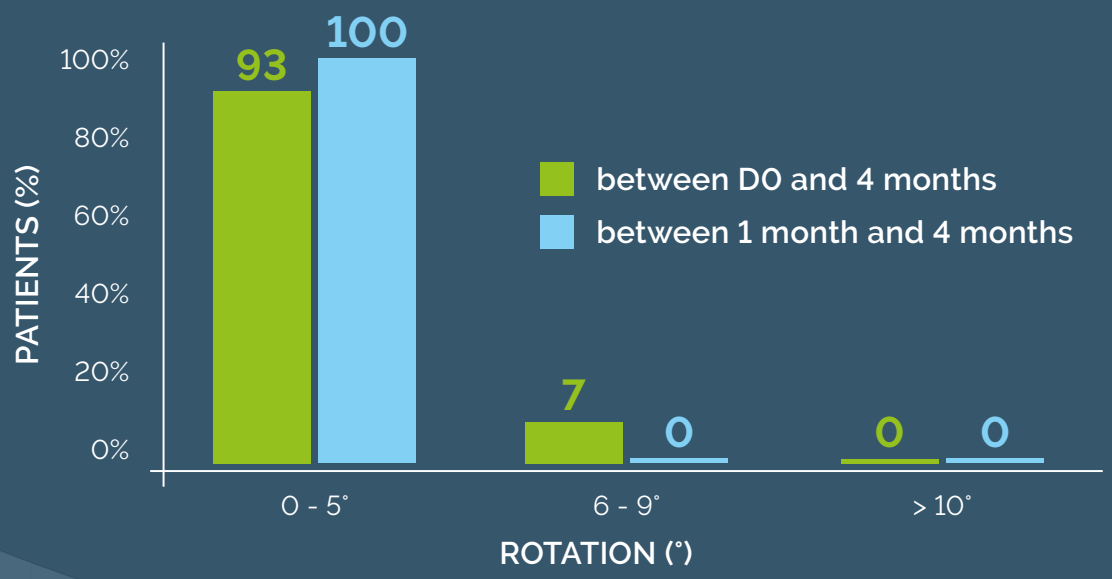

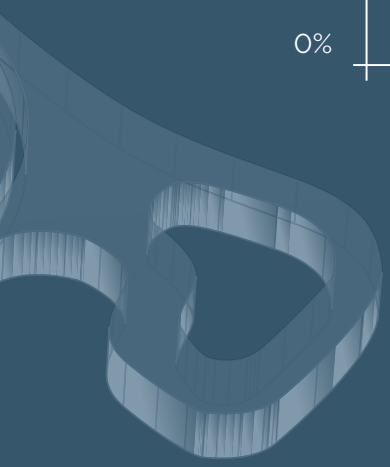

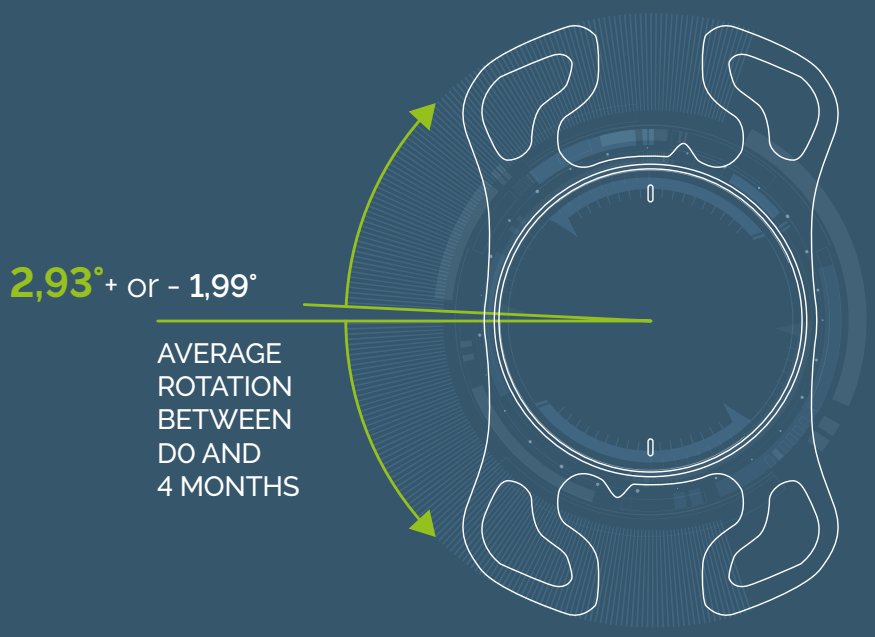

LARGE RANGE

- **Sphere**
  from +5,00D to +32,00D
- **Cylinder**
  from +0.75D, +1.0D, +1.50D, +2.25D, +3.00D, +3.75D, +4.50D, +5.25D, 6.00D
- **MiCS** 1,6 mm
- **Synthesis® Toric can treat corneal astigmatism from 0.50D.**

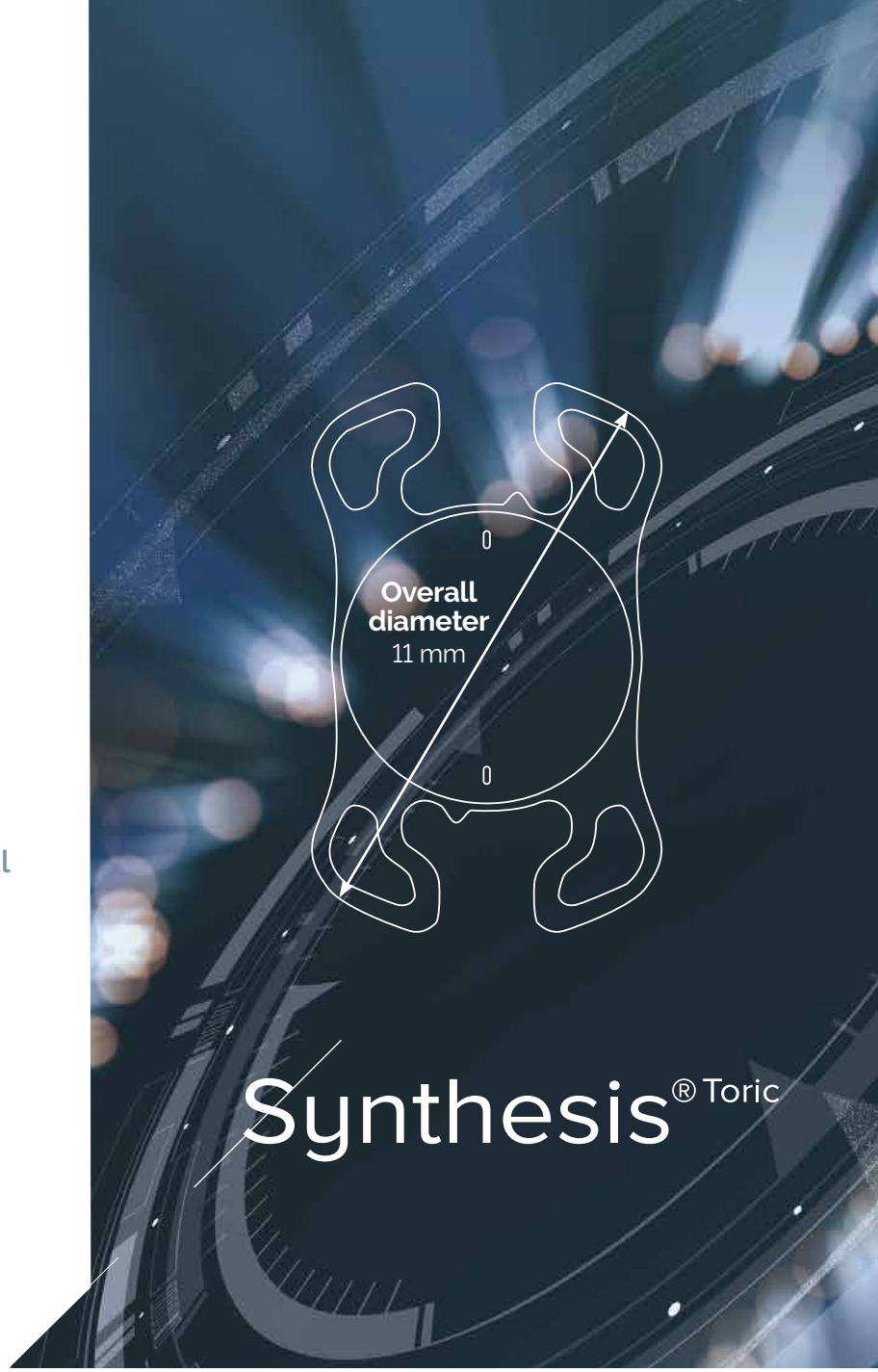

PRELOADED INJECTION SYSTEM

		Brands	References	Wound-assisted recommended incision	In-the wound recommended incision	In-the-bag recommended incision
Synthesis® Toric	Preloaded	Medicel Accuject™ PRO 1.6	**LP604550P** (box of 10)	1.6 mm	1.8 mm	2.0 mm

Class IIa Medical Device - Manufactured by Medicel _ CE 0482
Dornierstrasse 11 - CH-9423 Altenrhein - Switzerland - Distributed by CUTTING EDGE.

TECHNICAL SHEET

Synthesis® Toric

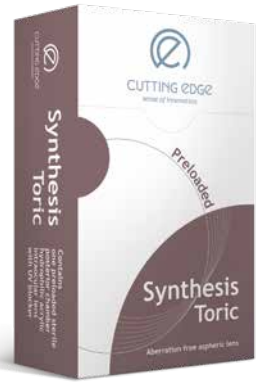

References	PRELOADED
Clear implant	**SIPT**

DESIGNATION	SPECIFICATIONS
Optic diameter	6 mm across the power range
Total diameter	11 mm across the power range
Design	4 point-fixation, C-Edge+ ≤ 5 microns
Optical	Aspheric and toric without aberration
Angulation	0°, posterior-shift feature
Dioptric power (Sphere)	1.0D increment between +5.00D to +10.00D 0.5D increment between +10.50D to +30.00D 1.0D increment between +31.00D to +32.00D
Dioptric power (Cylinder)	0,75D/1,0D/1,5D/2,25D/3,0D/3,75D/4,5D/5,25D/6,0D
Biometry available on the IOLcon website https://iolcon.org/	Optical biometry: SRK/T: A=118,85 Haigis: a0=1,223 (with a1=0,4 and a2=0,1) Hoffer-Q: pACD=5,46 Holladay 1: SF=1,706
Incision size	From 1.6 mm

toriccalc.cutting-edge.fr

This product is guaranteed latex free and phthalates free.

Synthesis® Toric

HIGH PRECISION

Next generation
online calculator

MICS
for surgically induced astigmatism

Large combination
of Sphere/Cylinder

Clinically proven
rotational stability

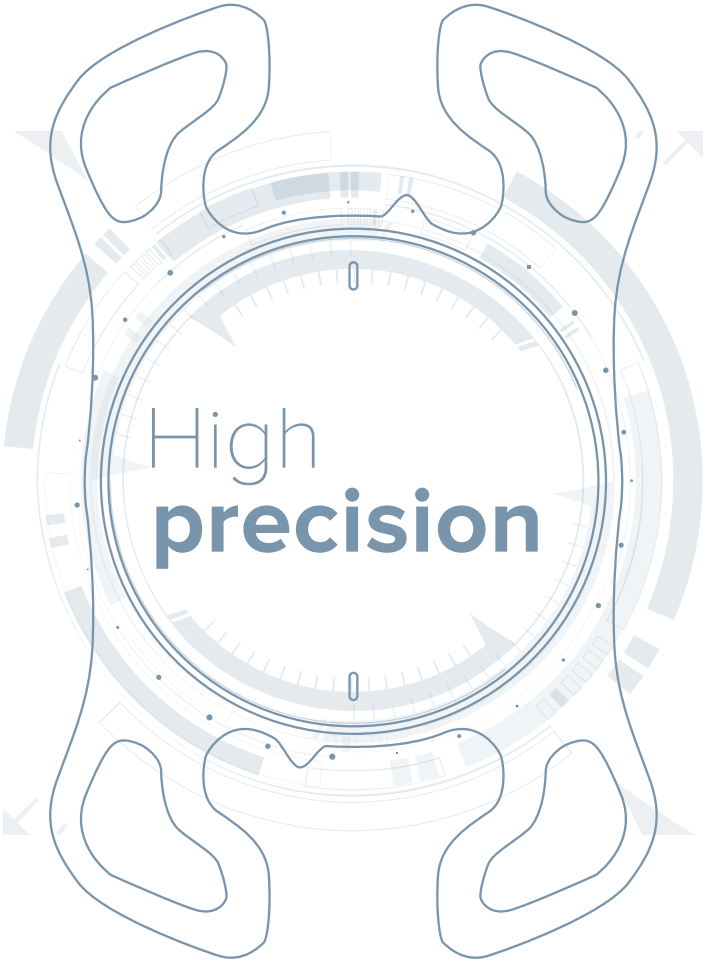

CUTTING EDGE

LOADING GUIDE

Synthesis® Toric

References	**PRELOADED**
Synthesis Toric Clear	**SIPT**

PRELOADED

1. Open the container; remove the loading cartridge that contains the IOL from the container by pulling on the armature taking care not to remove the protective clip.
2. Insert the loading cartridge into the injector body until it locks into position.
3. Carefully rinse the lens with balanced salt solution.

4. Through the filling hole, fill the cartridge tunnel with viscoelastic.
5. Fill a small amount of visco behind the lens at the rear of the loading chamber.
6. Push the plunger until the silicone tip approaches the rear of the loading chamber.

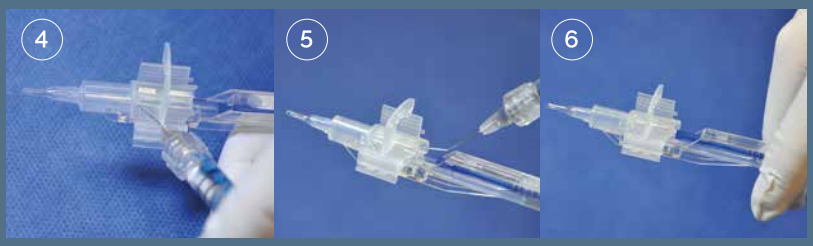

7. Carefully remove the clip from the loading chamber:
   - Grab the armature with two fingers while rotating the bottom hinge upwards with the thumb
   - Lift vertically.

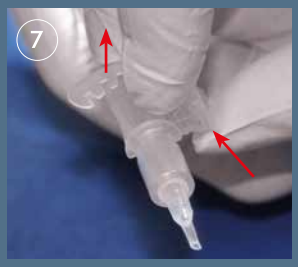

8. Check that the lens is correctly positioned and close the wings of the loading chamber. When loaded correctly, you will hear a “click” sound.
9. Push the plunger to position the implant in the cartridge tunnel. The system is ready for injection.

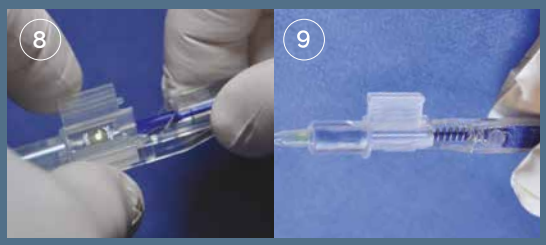

10. Once implanted, the orientation features of the Synthesis® Toric’s implant must be oriented at the top right (A) and at the bottom left (B).

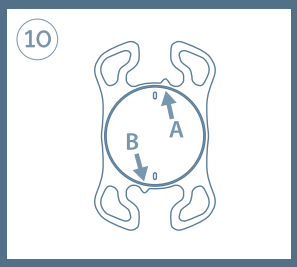

Reserved for health care professionals. Please refer to the operating instructions.

An innovative family of IOLs

Synthesis® Acrylic Monofocal

Synthesis® Toric

Synthesis®+ EDOF

PRELOADED | YELLOW | CLEAR | MONOFOCAL | EDOF | TORIC

CUTTING EDGE
770 rue Alfred Nobel - Immeuble le Nobel - 34000 Montpellier - France
Tél. : +33 (0)5 62 24 65 03 - Fax +33 (0)5 62 24 65 05

KESTREL OPHTHALMICS LTD
Unit 9 Cabot Business Village, Holyrood Close, Poole, Dorset, BH17 7BA - United Kingdom
Tel. +44 (0) 1202 696963

CUTTING EDGE SURGICAL
70 izq Local Avinguda Manuel Girona - 08860 Casteldefels - España
Tel. +34 931 293 849

www.cutting-edge.eu - info@cutting-edge.eu

CE 0197

Bibliography >
(1) Wilkins M, Allan B, Rubin G. Spectacle use after routine cataract surgery. Br J Ophthalmol 2009;93:1307–1312
(2) Day AC, Dhariwal M, Keith MS, et al. Distribution of preoperative and postoperative astigmatism in a large population of patients undergoing cataract surgery in the UK. British Journal of Ophthalmology. Published Online First: 06 September 2018. doi: 10.1136/bjophthalmol-2018-312025
(3) Freeman B. Market scope. 2016 IOL Report: A Global Market Analysis for 2015 to 2021.
(4) Kessel L, Andresen J, Tendal B et al. Toric Intraocular Lenses in the Correction of Astigmatism During Cataract Surgery. A Systematic Review and Meta-analysis.. Ophthalmology. 2016. 123(2):275-86
(5) Koch D, Ali S, Weikert M et al. Contribution of posterior corneal astigmatism to total corneal astigmatism. J Cataract Refract Surg 2012; 38:2080–2087
(6) Levy P. «Pré requis , implants toriques calcul du cylindre» . Amzallag T, Rozot P. Chirurgie de la cataracte. 2018, Elsevier Masson SAS. Pages 19 à 24 .
(7) Kaur M, Shaikh F, Falera R. et al. Optimizing outcomes with toric intraocular lenses. Indian J Ophthalmol 2017;65:1301-13
(8) Tetikoglu M, Yeter C, Helvacıoglu F et al. Effect of Corneal Incision Enlargement on Surgically Induced Astigmatism in Biaxial Microincision Cataract Surgery. Turk J Ophthalmol 2016. 46; 3: 99-103
(9) Evaluation of the rotational stability of the SISA (Cutting Edge) monofocal intraocular lens after cataract surgery - a prospective uncontrolled open-label study. ID-RCB number: 2017-AOO924-49. Data on file.

Reserved for health care professionals. Please refer to operating instructions.

BR-010-00/21.08.2019-EN
19/07/CE/PM/001
Design couleur-citron.com

Synthesis Preloaded

PRELOADED ABERRATION FREE ASPHERIC LENS

CUTTING EDGE
sense of innovation

Models SIP and SIPY (yellow)

EN INTRAOCULAR LENS

DESCRIPTION:
The Synthesis intraocular lens (IOL) is a single-piece ultraviolet (UV) absorbing posterior chamber IOL developed to replace the natural crystalline lens in pseudophakic adult patients. The Synthesis IOL has aspheric optics designed to be free of spherical aberration. The preloaded intraocular Synthesis lens is supplied with an Accuject Pro Delivery System to provide a sterile, controlled and touch-free method of delivery of the lens into the ocular bag. The Preloaded Synthesis IOL is supplied in 2 different models – Models SIP or SIPY. See label on the cardboard box for type of the lens.

1577003

PHYSICAL CHARACTERISTICS:

Lens / Haptic Material	Model SIP: Foldable hydrophilic acrylic copolymer containing a UV absorber. Model SIPY: Foldable hydrophilic acrylic copolymer containing a UV absorber and a blue light filtering chromophore.
Material Characteristics	Index of Refraction when wet at 20˚C: 1.460 Index of Refraction when in the eye at 35˚C: 1.459
Spectral Transmittance	Model SIP: 10% transmittance at 365 nanometers for +20.0 diopter IOL. Model SIPY: 10% transmittance at 374 nanometers for +20.0 diopter IOL. See **FIG.8** with chart's X-value = Wavelength (nm) and Y-value = % Transmittance
Optic Type	Aspheric aberration free
Powers	-10.0 to +40.0 Diopters
Dimensions	Body Diameter: 6.0 mm; Overall Diameter: 10.5 mm to 11 mm across the diopter range; Haptic Angle: 0˚
Lens Orientation	The anterior side of the lens is facing up towards the anterior side of the eye. As illustrated in FIG.7, when the orientation features are top right (A) and bottom left (B), you are facing the anterior side of the lens.

INDICATIONS:
The Synthesis posterior chamber lens is indicated for primary implantation for the visual correction of aphakia in adult patients. The lens is designed for implantation in the capsular bag.

CONTRA-INDICATIONS AND WARNINGS:
Physicians considering lens implantation in any of the following circumstances (but not limited to) must weigh the potential risk/benefit ratio: recurrent severe anterior or posterior segment inflammation or uveitis; patients in whom the IOL may affect the ability to observe, diagnose, or treat posterior segment diseases; surgical difficulties increasing the potential for complications (such as but not limited to: persistent bleeding, significant iris damage, uncontrolled positive pressure, or significant vitreous prolapse or loss); distorted eye due to previous trauma or developmental defect in which appropriate support of the IOL is not possible; circumstances that would result in damage to the endothelium during implantation; patients in whom neither the posterior capsule nor zonule are intact enough to provide support; suspected microbial infection.
As with any surgical procedure, there is risk involved. Potential complications of cataract surgery may include, but are not limited to the following: inflammation (iridocyclitis, pupillary membrane, vitreous inflammation, CME, TASS ...), corneal endothelial damage, endophthalmitis, retinal detachment, corneal edema, pupillary block, iris prolapse, hypopyon, glaucoma, wound leak, hyphema, iris atrophy, vitreous prolapse, IOL decentration or tilt, IOL silicone adhesion, IOL optic deposits or opacities, and secondary surgical intervention (such as but not limited to wound leak repair, vitreous aspiration, iridectomy, IOL repositioning or replacement and retinal detachment repair).
The IOL must be implanted in accordance to the following instructions for use. Improper use may impose risk to the patient's health.
Do not use if product sterility or quality is thought to be compromised due to damaged packaging or signs of leakage.
Do not attempt to modify or alter the device or any of its components.
Do not use the lens after expiration date.
Do not reuse the lens and the preloaded system. Reuse may impose serious risk to the patient's health.
Do not resterilize as this can produce undesirable side effects.

PRECAUTIONS:
- Store at room temperature. Avoid temperatures below 5˚C and above 45˚C. Do not freeze.
- The IOL model, its power and expiration date should be verified before opening the protective packaging and before opening the individual sterile pouch.
- Use correct injector compatible.
- Sterility of the IOL and of the injector parts is guaranteed only if the individual sterile pouches have not been opened or damaged.
- IOLs must be carefully rinsed prior to implantation. Do not soak or rinse the IOL with any solution other than sterile balanced salt solution.
- Care should be taken to remove all viscoelastic from the anterior and posterior surfaces of the lens after implantation in the capsular bag.
- If a YAG laser posterior capsulotomy is performed, assure that the laser beam is focused slightly behind the posterior capsule.

PACKAGING / STERILIZATION:
The Preloaded Synthesis IOL is individually packaged in a pouch and a vial containing balanced salt solution that should be opened under sterile conditions. The Synthesis IOL is placed in a loading chamber, fixed by a lens holder, all immersed in BSS. A patient card and self-adhesive labels are supplied in the carton to provide traceability of the IOL. The Preloaded Synthesis IOL is steam sterilized.

DIRECTIONS FOR USE:
1. The physician should determine preoperatively the power of the lens to be implanted, using calculation methods. The recommended A-constants listed on the lens carton are guidelines only.
2. Prior to implanting, examine the lens package for model, power, and proper configuration.
3. Open the carton and remove the sterilized pouch containing the lens vial. Gradually peel the pouch apart to release the vial onto the sterile field. Inspect the vial. Make sure it is not damaged and the seal is not broken. Hold the vial in one hand. Grasp the pull-tab of the foil lid and peel the foil lid away from you while holding the vial in a horizontal position to expose the loading chamber.
Please refer to the enclosed figures to place the loading chamber into the compatible injector.
4. Remove the loading chamber containing the lens from the lens vial by pulling up on the upper loop of the lens holder. Do not remove the lens holder at this time.
5. Thoroughly rinse the loading chamber containing the lens with a sterile balanced salt solution, avoiding contact with gloves. Do not touch the lens.
6. Prior to inserting the loading chamber into the injector ensure that the plunger is in withdrawn position. Insert the loading chamber containing the lens into the opening of the compatible injector body until it locks into position (FIG. 1).
7. Rinse the lens with sterile balanced salt solution through the back of the loading chamber, holding the injector inclined to allow the flow of sterile balanced saline solution through the tip of the injector (FIG. 2).
8. Taking care not to touch the IOL, apply viscoelastic through the filling hole of the lens holder in the direction of the cartridge tip (FIG. 3) and at the end of the loading chamber (FIG. 4). Ensure that the viscoelastic fills the injector tip and migrates half way under the lens.
9. Push the plunger forward until the silicone cushion approaches the lens holder.
10. Remove the lens holder from the loading chamber by grasping the loop of the holder with two fingers and by flipping up the lower hinge of the lens holder with the thumb and lifting straight up (FIG. 5).
11. Check that the lens is positioned centrally in the loading chamber and close the wings of the loading chamber (FIG. 6). When the "click-lock" mechanism is engaged, the lens is securely in place. The system is ready for injection.
For detailed descriptions, refer to the instructions for use supplied with the compatible injector.
12. Press the injector plunger forward to push the lens. Implant the lens with the bevel of the injector tip facing down to the patient's eye. The anterior side of the lens is facing up towards the cornea when the orientation features are top right (A) and bottom left (B) (FIG. 7).
Only viscoelastic solution of low to medium viscosity should be used.
Only the injection system provided with the preloaded Synthesis lens should be used.
There are various surgical procedures that can be utilized, and the surgeon should select a procedure that is appropriate for the patient.

SYMBOLS USED ON LABELING:

Symbol	Description
D	Diopter
ØB	Body Diameter
ØT	Overall Diameter

Synthesis Preloaded

LENTILLE ASPHÉRIQUE PRÉCHARGÉE SANS ABERRATION

Modèles SIP et SIPY (jaune)

FR LENTILLE INTRAOCULAIRE

DESCRIPTION :
La lentille intraoculaire (LIO) Synthesis est une lentille intraoculaire monobloc de chambre postérieure filtrant les rayons ultraviolets (UV) et développée pour remplacer le cristallin naturel chez les patients pseudophaques adultes. La LIO Synthesis dispose d'une optique asphérique conçue pour être exempte de toute aberration sphérique. La lentille intraoculaire préchargée Synthesis est fournie avec un système d'implantation Accuject Pro afin d'offrir un mode d'implantation stérile, contrôlé et sans contact de la lentille dans le sac oculaire. La LIO préchargée Synthesis existe en deux modèles : SIP et SIPY. Reportez-vous à l'étiquette sur le carton pour connaître/vérifier le type de lentille.

CARACTÉRISTIQUES PHYSIQUES :

Matériau de la lentille / des haptiques	Modèle SIP : copolymère acrylique hydrophile pliable avec filtre UV. Modèle SIPY : copolymère acrylique hydrophile pliable avec filtre UV et chromophore filtrant la lumière bleue.
Caractéristiques du matériau	Indice de réfraction (humide à 20 ˚C) : 1.460 Indice de réfraction (dans l'œil à 35 ˚C) : 1.459
Transmission spectrale	Modèle SIP : transmission de 10 % à 365 nanomètres pour une LIO de +20,0 dioptries. Modèle SIPY : transmission de 10 % à 374 nanomètres pour une LIO de +20,0 dioptries. Voir **FIG.8** où la valeur X du graphique représente la longueur d'onde (nm) et la valeur Y, la transmittance (%).
Type d'optique	Asphérique sans aberration
Puissances	-10.0 à +40.0 dioptries
Dimensions	Diamètre du corps : 6 mm ; diamètre total : 10,5 à 11 mm sur la gamme dioptrique ; angulation : 0˚
Orientation de la lentille	Lors de sa mise en place, la surface antérieure de la lentille doit être orientée vers la face antérieure de l'œil. Comme l'illustre la FIG.7, lorsque les détrompeurs se trouvent en haut à droite (A) et en bas à gauche (B), vous observez la face antérieure de la lentille.

INDICATIONS :
La lentille de chambre postérieure Synthesis est indiquée dans l'implantation primaire destinée à la correction visuelle de l'aphakie chez les patients adultes. Elle est conçue pour être implantée dans le sac capsulaire.

CONTRE-INDICATIONS ET AVERTISSEMENTS :
Les médecins envisageant l'implantation de la lentille dans les conditions suivantes (mais sans s'y limiter) doivent évaluer le rapport bénéfices/risques : uvéite ou inflammation aiguë récurrente du segment antérieur ou postérieur ; patients chez lesquels la LIO risque d'altérer la capacité à observer, diagnostiquer ou traiter les maladies du segment postérieur ; difficultés chirurgicales augmentant les risques de complications (par exemple, mais sans s'y limiter : saignement persistant, lésion grave de l'iris, pression positive incontrôlée ou perte/prolapsus important du corps vitré) ; déformation oculaire due à un traumatisme précédent ou à un défaut de développement ne permettant pas le support adapté de la LIO; circonstances pouvant entraîner une lésion de l'endothélium lors de l'implantation ; patients chez lesquels ni la capsule postérieure, ni la zonule ne sont suffisamment en bon état pour le soutien adéquat de la lentille ; suspicion d'infection microbienne.
Toute procédure chirurgicale comporte des risques. Les complications potentielles de la chirurgie de la cataracte sont (sans s'y limiter) les suivantes : inflammation (iridocyclite, membrane pupillaire, hyalite, oedème maculaire cystoïde, syndrome toxique du segment antérieur, etc.), lésions endothéliales cornéennes, endophtalmie, décollement de rétine, œdème cornéen, bloc pupillaire, prolapsus irien, hypopyon, glaucome, fuite de l'incision, hyphéma, atrophie de l'iris, prolapsus du corps vitré, décentrement ou inclinaison de la LIO, adhérence du silicone à la LIO, dépôts ou opacités sur l'optique de la LIO et intervention chirurgicale secondaire (par exemple, mais sans s'y limiter, réparation de la fuite de l'incision, vitrectomie, iridectomie, repositionnement ou remplacement de la LIO et réparation du décollement de la rétine).
La LIO doit être implantée conformément aux instructions suivantes. Toute utilisation inadaptée peut entraîner des risques pour la santé du patient.
Ne pas utiliser ce produit si son emballage est abîmé ou si vous constatez des traces de fuite, et que vous soupçonnez une altération de sa stérilité ou de sa qualité.
Ne pas essayer de modifier ou d'altérer le dispositif ou l'un de ses composants.
Ne pas utiliser la lentille après sa date d'expiration.
Ne pas réutiliser la lentille et le système préchargé. Toute réutilisation peut entraîner des risques importants pour la santé du patient.
Ne pas restériliser sous peine d'effets secondaires indésirables.

PRÉCAUTIONS :
- Entreposer à température ambiante. Ne pas conserver à des températures inférieures à 5 ˚C et supérieures à 45 ˚C. Ne pas congeler le produit.
- Vérifier le modèle de LIO, la puissance et la date d'expiration avant l'ouverture de l'emballage de protection et de l'enveloppe stérile.
- Utiliser un injecteur approprié et compatible.
- La stérilité de la LIO et des pièces de l'injecteur n'est garantie que si l'enveloppe stérile individuelle n'a pas été ouverte ou endommagée.
- Rincer soigneusement les LIO avant toute implantation. Utiliser uniquement une solution saline équilibrée stérile pour rincer ou faire tremper la LIO.
- Retirer toute trace de viscoélastique des surfaces antérieure et postérieure de la lentille après implantation dans le sac capsulaire.
- En cas de capsulotomie postérieure au laser YAG, s'assurer que le faisceau de laser est focalisé légèrement en arrière de la capsule postérieure.

CONDITIONNEMENT / STÉRILISATION :
Les LIO préchargées Synthesis sont conditionnées individuellement dans une enveloppe et dans un flacon contenant une solution saline équilibrée qui ne doivent être ouverts que dans des conditions stériles. La LIO Synthesis est placée dans une chambre de chargement, fixée par une goupille, puis immergée dans une solution saline équilibrée stérile. Une carte patient et des étiquettes adhésives sont fournies dans le carton pour garantir la traçabilité de la LIO. La LIO préchargée Synthesis est stérilisée à la vapeur.

MODE D'EMPLOI :
1. Avant l'opération, déterminez par différentes méthodes de calcul la puissance de la lentille à implanter. Les constantes A recommandées et indiquées sur l'emballage de la lentille sont uniquement données à titre indicatif.
2. Avant l'implantation, examinez l'emballage pour vérifier le modèle de la lentille, la puissance et son aspect général.
3. Ouvrez le carton et retirez l'enveloppe stérile contenant le flacon de la lentille. Ouvrez lentement l'enveloppe pour libérer le flacon sur le champ stérile. Inspectez le flacon. Assurez-vous qu'il n'est pas endommagé et que le scellage est intègre. Tenez le flacon d'une main. Tirez l'opercule dans la direction contraire à la vôtre tout en maintenant le flacon en position horizontale pour exposer la chambre de chargement. Veuillez vous reporter aux figures ci-jointes afin de placer la chambre de chargement dans l'injecteur compatible.
4. Retirez la chambre de chargement contenant la lentille du flacon en tirant sur la partie supérieure de la goupille sans la désolidariser de la chambre de chargement.
5. Rincer abondamment la chambre de chargement contenant l'implant avec une solution saline équilibrée stérile, en évitant tout contact avec les gants. Ne pas toucher l'implant.
6. Avant d'insérer la chambre de chargement dans l'injecteur, assurez-vous que le piston se trouve en position arrière. Insérez la chambre de chargement contenant la lentille dans l'ouverture du corps de l'injecteur compatible jusqu'à ce qu'elle se verrouille sur sa position (FIG. 1).
7. Rincez l'implant par l'arrière de la chambre de chargement avec une solution saline équilibrée stérile en maintenant l'injecteur incliné pour permettre l'écoulement de la solution saline équilibrée stérile par la pointe de l'injecteur (FIG. 2).
8. En veillant à ne pas toucher la LIO, appliquez la solution viscoélastique par l'orifice de remplissage de la goupille en direction de l'extrémité de la cartouche (FIG. 3) et par l'arrière de la chambre de chargement (FIG. 4). Assurez-vous que la solution viscoélastique remplisse la pointe de l'injecteur et qu'elle migre à mi-chemin sous la lentille.
9. Poussez sur le piston jusqu'à ce que l'embout en silicone s'approche de la goupille.
10. Retirez la goupille de la chambre de chargement en saisissant l'armature de la goupille avec deux doigts et en basculant vers le haut la charnière inférieure de la goupille avec le pouce et en la soulevant à la verticale (FIG. 5).
11. Vérifiez que la lentille se trouve au centre de la chambre de chargement et fermez les ailettes de la chambre de chargement (FIG. 6). Lorsque le mécanisme de verrouillage par encliquetage s'enclenche, la lentille est bien en place. Le système est prêt pour l'injection.
Pour des descriptions détaillées, veuillez vous reporter aux instructions d'utilisation fournies avec l'injecteur compatible.
12. Appuyez sur le piston de l'injecteur pour pousser la lentille. Implantez la lentille en veillant à ce que le biseau de la pointe de l'injecteur soit orienté vers le bas, face à l'œil du patient. La face antérieure de la lentille est orientée vers le haut, face à la cornée lorsque les détrompeurs se trouvent en haut à droite (A) et en bas à gauche (B) (FIG. 7).
Seules les solutions viscoélastiques de viscosité faible à moyenne doivent être utilisées.
Seul le système d'injection fourni avec la lentille préchargée Synthesis doit être utilisé.
Différentes procédures chirurgicales peuvent être utilisées, il revient au chirurgien de sélectionner une procédure adaptée au patient.

SYMBOLES UTILISÉS SUR L'ÉTIQUETAGE :

Symbole	Description
D	Dioptrie
ØB	Diamètre du corps
ØT	Diamètre total

Synthesis Preloaded

VORGELADENE ABERRATIONSFREIE ASPHÄRISCHE LINSE

Modelle SIP und SIPY (gelb)

DE INTRAOKULARLINSE

BESCHREIBUNG:
Die Synthesis Intraokularlinse (IOL) ist eine einteilige Hinterkammerlinse mit Filter für ultraviolettes (UV) Licht, die als Ersatz der natürlichen Augenlinse bei pseudophaken erwachsenen Patienten eingesetzt wird. Die Synthesis IOL ist mit einer asphärischen Optik ausgestattet, sodass keine sphärischen Aberrationen auftreten. Die vorgeladene Synthesis IOL wird mit einem Accuject Pro Einführsystem ausgeliefert, um eine sterile, kontrollierte und berührungsfreie Einbringung der Linse in den Kapselsack. Die Synthesis Preloaded IOL gibt es in zwei verschiedenen Modellen – Modell SIP oder SIPY. Auf dem Kartonaufkleber ist die Art der Linse angegeben.

PHYSIKALISCHE EIGENSCHAFTEN:

Linse/ Haptik-Material	Modell SIP: Faltbares hydrophiles Acrylcopolymer mit UV-Filter. Modell SIPY: Faltbares hydrophiles Acrylcopolymer mit UV-Filter und Blaulichtfilter-Chromophor.
Materialeigen-schaften	Brechungsindex in nassem Zustand bei 20 ˚C: 1.460 Brechungsindex im Auge bei 35 ˚C: 1.459
Spektrale Transmission	Modell SIP: 10 % Transmission bei 365 Nanometer für IOL mit +20,0 Dioptrien. Modell SIPY: 10 % Transmission bei 374 Nanometer für IOL mit +20,0 Dioptrien. Siehe Abb. 8, wobei die X-Achse die Wellenlänge (nm) und die Y-Achse die Transmission (%) zeigt.
Art der Optik	Asphärisch aberrationsfrei
Stärken	-10.0 bis +40.0 Dioptrien
Abmessungen	Durchmesser der Optik: 6,0 mm; Gesamtdurchmesser: 10,5 mm bis 11 mm über den Dioptriebereich hinweg; Abwinklung der Haptik: 0˚
Ausrichtung der Linse	Die Vorderseite der Linse wird nach oben in Richtung der anterioren Seite des Auges implantiert. Wenn sich die Ausrichtungsmarkierungen oben rechts (A) und unten links (B) befinden (wie in Abb. 7 dargestellt), zeigt die Vorderseite der Linse nach oben.

ANWENDUNGSGEBIETE:
Die Synthesis Hinterkammerlinse ist für die primäre Implantation zur optischen Korrektur einer Aphakie bei erwachsenen Patienten indiziert. Die Linse wird im Kapselsack implantiert.

GEGENANZEIGEN UND WARNHINWEISE
Wenn ein Arzt die Linsenimplantation unter einem der folgenden Umstände in Betracht zieht (wobei diese Liste nicht vollständig ist), muss das potenzielle Risiko-Nutzen-Verhältnis abgewogen werden: rezidivierende schwere Entzündung oder Uveitis des vorderen oder hinteren Segments, Patienten, bei denen die IOL die Möglichkeit zur Beobachtung, Diagnose oder Behandlung von Erkrankungen des hinteren Segments beeinträchtigt, chirurgische Probleme, die das Komplikationspotenzial vergrößern (u. a. anhaltende Blutung, signifikanter Irisschaden, unkontrollierter Überdruck oder deutlicher Glaskörperprolaps oder Glaskörperverlust), deformiertes Auge durch vorheriges Trauma oder durch Entwicklungsstörung, weswegen kein ausreichender Halt der IOL gewährleistet ist, Umstände, die während der Implantation zu Schäden im Endothel führen würden, Patienten, bei denen weder die hintere Kapsel noch die Zonulafasern ausreichend intakt sind, um Halt zu geben, Verdacht auf mikrobielle Infektion.
Wie bei jedem chirurgischen Eingriff besteht ein Risiko. Zu den potenziellen Komplikationen einer Kataraktoperation gehören u. a. Entzündung (Iridozyklitis, Membrana pupillaris, Glaskörperentzündung, CME, TASS ...), Beschädigung des Hornhautendothels, Endophthalmitis, Netzhautablösung, Hornhautödem, Pupillarblock, Irisprolaps, Hypopyon, Glaukom, Wundausfluss, Hyphäma, Irisatrophie, Glaskörperprolaps, Dezentrierung oder Verrutschen der IOL, Silikonadhäsion der IOL, optische Ablagerungen oder Schlieren auf der IOL und sekundäre chirurgische Eingriffe (u. a. Stoppen von Wundausfluss, Glaskörperaspiration, Iridektomie, Neupositionierung oder Austausch der IOL und Behandlung einer Netzhautablösung).
Die IOL muss unter Beachtung der nachfolgenden Gebrauchsanleitung implantiert werden. Die nicht ordnungsgemäße Anwendung kann die Gesundheit des Patienten beeinträchtigen.
Das Produkt nicht verwenden, wenn seine Sterilität oder Qualität aufgrund von Verpackungsbeschädigungen oder Anzeichen einer Leckage beeinträchtigt sein könnte.
Das Produkt oder seine Komponenten dürfen nicht modifiziert oder verändert werden.
Keine Linsen verwenden, deren Verfalldatum abgelaufen ist.
Die Linse und das vorgeladene System dürfen nicht wiederverwendet werden. Die Wiederverwendung kann die Gesundheit des Patienten schwer beeinträchtigen.
Nicht erneut sterilisieren, da dies zu Nebenwirkungen führen kann.

VORSICHTSMASSNAHMEN:
- Bei Raumtemperatur lagern. Temperaturen unter 5 ˚C und über 45 ˚C vermeiden. Nicht einfrieren.
- Das IOL-Modell, die Stärke und das Verfalldatum müssen vor dem Öffnen der Schutzverpackung und vor dem Öffnen jedes einzelnen Sterilbeutels überprüft werden.
- Es muss ein kompatibler Injektor verwendet werden.
- Die Sterilität der IOL und des Injektorsystems sind nur gewährleistet, wenn die einzelnen Sterilbeutel nicht geöffnet oder beschädigt wurden.
- Die IOL muss vor der Implantation sorgfältig gespült werden. Die IOL darf nur mit einer sterilen physiologischen Kochsalzlösung gespült oder darin eingelegt werden.
- Es ist darauf zu achten, dass nach der Implantation in den Kapselsack jegliches viskoelastische Material von der Vorder- und Rückseite der Linse entfernt wird.
- Wenn eine hintere Kapsulotomie mit YAG-Laser durchgeführt wird, muss mit dem Laser etwas hinter die hintere Kapsel gezielt werden.

VERPACKUNG/STERILISATION:
Jede einzelne Synthesis Preloaded IOL befindet sich in einem Behälter mit physiologischer Kochsalzlösung, der in einen Beutel verpackt ist und unter sterilen Bedingungen geöffnet werden muss. Die Synthesis IOL steckt in der ebenfalls mit physiologischer Kochsalzlösung gefüllten Ladekammer, die durch einen Linsenhalter fixiert ist. In dem Karton befinden sich außerdem ein Patientenausweis und einige Aufkleber zur Nachverfolgung der IOL. Die Synthesis Preloaded IOL wurde mit Dampf sterilisiert.

GEBRAUCHSANLEITUNG:
1. Der Arzt muss die Stärke der zu implantierenden Linse präoperativ mit Berechnungsmethoden bestimmen. Die auf dem Karton der Linse aufgeführten A-Konstanten verstehen sich nur als Empfehlung.
2. Vor der Implantation auf der Linsenverpackung prüfen, ob es sich um das richtige Modell in der richtigen Stärke mit der gewünschten Konfiguration handelt.
3. Den Karton öffnen und den sterilen Beutel mit dem Behälter herausnehmen. Den Beutel teilweise aufreißen und den Behälter auf dem Sterilfeld ablegen. Behälter inspizieren. Er darf nicht beschädigt sein und das Siegel darf nicht gebrochen sein. Den Behälter in einer Hand halten. Den Behälter waagerecht festhalten, die Lasche für die Schutzfolie anfassen und die Schutzfolie abziehen. Jetzt ist die Ladekammer sichtbar.
Die Bilder unten auf dieser Gebrauchsanleitung zeigen, wie die Ladekammer in den kompatiblen Injektor einzusetzen ist.
4. Die Ladekammer mit der Linse am oberen Ring des Linsenhalters anfassen und aus dem Behälter ziehen. Den Linsenhalter noch nicht von der Kammer nehmen.
5. Die die Linse enthaltende Ladekammer sorgfältig mit einer sterilen, physiologischen Kochsalzlösung spülen und dabei jede Berührung mit Handschuhen vermeiden. Die Linse nicht berühren.
6. Vor dem Einsetzen der Ladekammer in den Injektor darauf achten, dass der Kolben ganz zurückgezogen ist. Die Ladekammer mit der Linse in die Öffnung des kompatiblen Injektors setzen, bis sie einrastet (Abb. 1).
7. Die Linse durch die Rückseite der Ladekammer mit einer sterilen, physiologischen Kochsalzlösung spülen und dabei den Injektor geneigt halten, damit die sterile, physiologische Kochsalzlösung durch die Spitze des Injektors fliessen kann (ABB. 2).
8. Darauf achten, die IOL nicht zu berühren. Viskoelastisches Material durch das Einfüllloch im Linsenhalter in Richtung Spitze (Abb. 3) und am Ende der Ladekammer injizieren (Abb. 4). Dafür sorgen, dass das viskoelastische Material die Injektorspitze ausfüllt und sich bis halb unter die Linse verteilt.
9. Den Kolben vorschieben, bis das Silikonkissen den Linsenhalter erreicht.
10. Den Linsenhalter von der Ladekammer entfernen. Dafür den Ring des Linsenhalters mit zwei Fingern anfassen, das untere Scharnier des Linsenhalters mit dem Daumen nach oben drücken und den Halter gerade nach oben herausziehen (Abb. 5).
11. Sicherstellen, dass die Linse in der Mitte der Ladekammer liegt und die Flügel der Ladekammer schließen (Abb. 6). Wenn der Schnappmechanismus einrastet, befindet sich die Linse am richtigen Platz und ist gesichert. Das System ist jetzt bereit für die Injektion.
Eine genaue Beschreibung ist Bestandteil der Gebrauchsanleitung für das kompatible Injektorsystem.
12. Den Kolben des Injektors hineindrücken, um die Linse vorzuschieben. Die Linse mit nach unten gerichteter Abschrägung der Injektorspitze in das Patientenauge implantieren. Die Vorderseite der Linse zeigt nach oben zur Hornhaut, wenn sich die Ausrichtungsmarkierungen oben rechts (A) und unten links (B) befinden (Abb. 7).
Es sollten nur Viskoelastika niedriger bis mittlerer Viskosität verwendet werden.
Es darf nur das mit der vorgeladenen Synthesis-Linse gelieferte Injektionssystem verwendet werden.
Für die Implantation kommen verschiedene Operationstechniken infrage und der Operateur muss das für den Patienten geeignete Verfahren wählen.

SYMBOLE AUF DEN AUFKLEBERN:

Symbol	Beschreibung
D	Dioptrie
ØB	Durchmesser der Optik
ØT	Gesamtdurchmesser

Synthesis Preloaded

LENTES ASFÉRICAS SIN ABERRACIÓN PRECARGADAS

Modelos SIP y SIPY (amarillo)

ES LENTES INTRAOCULARES

DESCRIPCIÓN:
La lente intraocular (LIO) Synthesis es una LIO de cámara posterior, de una sola pieza, que absorbe los rayos ultravioleta (UV) desarrollada para reemplazar el cristalino natural en pacientes adultos pseudofáquicos. La LIO Synthesis tiene una óptica asférica diseñada para estar libre de aberración esférica. La lente Synthesis intraocular precargada se suministra con un Sistema de Colocación Accuject Pro para proporcionar un método de colocación estéril, controlado y sin contacto de la lente en el saco ocular. La LIO Synthesis Precargada se suministra en 2 modelos diferentes, los modelos SIP o SIPY. Consultar la etiqueta en la caja de cartón para ver el tipo de lente.

CARACTERÍSTICAS FÍSICAS:

Material del háptico/lente	Modelo SIP: Copolímero acrílico hidrófilo plegable con un agente de absorción de UV. Modelo SIPY: Copolímero acrílico hidrófilo plegable con un agente de absorción de UV y un cromóforo que filtra la luz azul.
Características del material	Índice de refracción cuando está húmedo a 20 ˚C: 1.460 Índice de refracción cuando está en el ojo a 35 ˚C: 1.459
Transmisión espectral	Modelo SIP: Transmisión del 10 % a 365 nanómetros para la LIO de +20,0 dioptrías. Modelo SIPY: Transmisión del 10 % a 374 nanómetros para la LIO de +20,0 dioptrías. Consulte la FIG.8 con una gráfica donde el valor X = longitud de onda (nm) y el valor Y = transmisión (%)
Tipo de óptica	Asférica sin aberración
Potencias	De -10.0 a +40.0 dioptrías
Dimensiones	Diámetro del cuerpo: 6,0 mm; diámetro total: 10,5 mm a 11 mm en el intervalo de dioptrías; ángulo háptico: 0˚
Orientación de la lente	El lado anterior de la lente está orientado hacia el lado anterior del ojo. Tal como se ilustra en la FIG.7, cuando los elementos de orientación estén en la parte superior derecha (A) y en la parte inferior izquierda (B), usted está mirando hacia el lado anterior de la lente.

INDICACIONES:
La lente de cámara posterior Synthesis está indicada para la implantación primaria en la corrección visual de la afaquia en pacientes adultos. La lente está diseñada para su implantación en el saco capsular.

CONTRAINDICACIONES Y ADVERTENCIAS:
Los médicos que estén considerando la implantación de una lente en cualquiera de las siguientes circunstancias (entre otras) deberán evaluar la posible relación riesgo/beneficio: uveítis o inflamación recurrente intensa del segmento anterior o posterior; pacientes en los que la LIO pueda afectar a la capacidad de observar, diagnosticar o tratar enfermedades del segmento posterior; dificultades quirúrgicas que puedan aumentar el riesgo de sufrir complicaciones (como, entre otras: hemorragia persistente, daño significativo del iris, presión positiva incontrolada o pérdida o prolapso vítreo significativo); distorsión del ojo debido a un traumatismo previo o defecto del desarrollo en el que no se disponga de un soporte adecuado para la LIO; circunstancias que puedan provocar daños al endotelio durante la implantación; pacientes en los que ni la cápsula posterior ni la zónula estén lo suficientemente intactas como para proporcionar apoyo; sospecha de infección microbiana.
Al igual que con cualquier intervención quirúrgica, existen riesgos. Las posibles complicaciones asociadas a la cirugía de cataratas incluyen, entre otras, las siguientes: inflamación (iridociclitis, membrana pupilar, inflamación vítrea, CME, TASS, etc.), daños endoteliales de la córnea, endoftalmitis, desprendimiento de retina, edema corneal, bloqueo pupilar, prolapso del iris, hipopión, glaucoma, derrame en la herida, hipema, atrofia del iris, prolapso vítreo, inclinación o descentración de la LIO, adhesión de la silicona de la LIO, opacidades o depósitos ópticos de la LIO e intervención quirúrgica secundaria (como, entre otros, reparación del derrame en la herida, aspiración vítrea, iridectomía, reposicionamiento o reemplazo de la LIO y reparación del desprendimiento de retina).
La LIO debe implantarse conforme a las siguientes instrucciones de uso. Un uso inadecuado puede suponer un riesgo para la salud del paciente.
No usar el producto si se cree que la esterilidad o la calidad pueden estar afectadas debido a daños en el embalaje o a signos de fuga.
No modificar ni alterar el dispositivo ni ninguno de sus componentes.
No usar la lente después de la fecha de caducidad.
No reutilizar la lente ni el sistema precargado. Su reutilización puede suponer un riesgo grave para la salud del paciente.
No reesterilizar puesto que ello puede provocar efectos secundarios no deseados.

PRECAUCIONES:
- Conservar a temperatura ambiente. Evitar temperaturas inferiores a 5 ˚C y superiores a 45 ˚C. No congelar.
- El modelo de la LIO, su potencia y la fecha de caducidad se deben verificar antes de abrir el embalaje protector y antes de abrir la bolsa estéril individual.
- Usar un inyector compatible adecuado.
- La esterilidad de la LIO y de las piezas del inyector solo está garantizada si las bolsas estériles individuales no se han abierto o no están dañadas.
- Las LIO se deben enjuagar cuidadosamente antes de la implantación. No mojar ni enjuagar la LIO salvo que sea con una solución salina equilibrada estéril.
- Se debe tener cuidado de eliminar todo el material viscoelástico de las superficies anterior y posterior de la lente después de la implantación en el saco capsular.
- Si se realiza una capsulotomía posterior con láser YAG, comprobar que el haz del láser esté centrado ligeramente por detrás de la cápsula posterior.

EMBALAJE/ESTERILIZACIÓN:
La LIO Synthesis Precargada se envasa individualmente dentro de una bolsa y un vial que contiene una solución salina equilibrada que debe abrirse en condiciones de esterilidad. La LIO Synthesis está colocada en una cámara de carga, fijada por un portalentes, todo sumergido en SSB. En la caja, se suministra una tarjeta para el paciente y etiquetas autoadhesivas para proporcionar trazabilidad a la LIO. La LIO Synthesis Precargada se esteriliza por vapor.

INSTRUCCIONES DE USO:
1. El médico debe determinar antes de la intervención la potencia de la lente que se va a implantar usando métodos de cálculo. Las constantes A recomendadas en la caja de la lente son solo una guía.
2. Antes de efectuar la implantación, examine el envase de la lente para comprobar que el modelo, la potencia y la configuración sean adecuadas.
3. Abra la caja y extraiga la bolsa esterilizada que contiene el vial de la lente. Abra poco a poco la bolsa para extraer el vial en el campo estéril. Inspeccione el vial. Compruebe que no esté dañado y que el precinto no esté roto. Sujete el vial con una mano. Coja la lengüeta de la tapa de aluminio y despéguela mientras sujeta el vial en posición horizontal para dejar la cámara de carga al descubierto.
Consulte las figuras adjuntas para colocar la cámara de carga dentro del inyector compatible.
4. Saque la cámara de carga que contiene la lente del vial de la lente tirando hacia arriba de la presilla superior del portalentes. No saque el portalentes en este momento.
5. Aclare bien la cámara de carga que contiene la lente con una solución de sal equilibrada y estéril, evitando el contacto con los guantes. No toque la lente.
6. Antes de insertar la cámara de carga en el inyector, compruebe que el émbolo esté en posición de extracción. Inserte la cámara de carga que contiene la lente en la abertura del cuerpo del inyector compatible hasta que quede fijada en posición (FIG. 1).
7. Aclare la lente con una solución de sal equilibrada y estéril por la parte posterior de la cámara de carga, sujetando el inyector inclinado para que el flujo de solución salina equilibrada y estéril pase por la punta del inyector (FIG. 2).
8. Con cuidado de no tocar la LIO, aplique material viscoelástico a través del orificio de llenado del portalentes en la dirección de la punta del cartucho (FIG. 3) y al final de la cámara de carga (FIG. 4). Asegúrese de que el material viscoelástico llene la punta del inyector y emigre a medio camino debajo de la lente.
9. Empuje el émbolo hacia adelante hasta que el cojín de silicona se aproxime al portalentes.
10. Retire el portalentes de la cámara de carga agarrando la presilla del portalentes con dos dedos y volteando hacia arriba la bisagra inferior del portalentes con el pulgar y levantándolo recto hacia arriba (FIG. 5).
11. Compruebe que la lente esté colocada en el centro de la cámara de carga y cierre las alas de la cámara (FIG. 6). Cuando el mecanismo de bloqueo esté acoplado, la lente está bien fijada en su sitio. El sistema está listo para la inyección. Para obtener descripciones detalladas, consulte el manual de instrucciones que se facilita con el inyector compatible.
12. Apriete el émbolo del inyector hacia adelante para empujar la lente. Implante la lente con el bisel de la punta del inyector orientada hacia abajo al ojo del paciente. El lado anterior de la lente está orientado hacia la córnea cuando los elementos de orientación están en la parte superior derecha (A) y en la parte inferior izquierda (B) (FIG. 7).
Solo debe utilizarse solución viscoelástica de viscosidad baja a media.
Solo debe utilizarse el sistema de inyección suministrado con la lente Synthesis precargada.
Existen varios procedimientos quirúrgicos que pueden utilizarse, y el cirujano deberá elegir un procedimiento que sea adecuado para el paciente.

SÍMBOLOS UTILIZADOS EN EL ETIQUETADO:

Símbolo	Descripción
D	Dioptría
ØB	Diámetro del cuerpo
ØT	Diámetro total

Synthesis Preloaded

LENTE ASFERICA PRECARICATA SENZA ABERRAZIONE

Modelli SIP e SIPY (giallo)

IT LENTE INTRAOCULARE

DESCRIZIONE:
Le lenti Synthesis intraoculari (IOL) sono IOL monopezzo per camera posteriore con assorbimento dei raggi ultravioletti (UV) sviluppate per la sostituzione del cristallino naturale in pazienti adulti pseudofachici. Le lenti IOL Synthesis presentano un'ottica asferica e sono progettate per evitare qualsiasi tipo di aberrazione sferica. Le lenti intraoculari percaricate Synthesis sono fornite con un sistema di erogazione Accujet Pro per offrire un metodo sterile, controllato e senza contatto per l'inserimento della lente nel sacco oculare. Le lenti IOL Synthesis precaricate sono fornite in 2 diversi modelli: SIP o SIPY. Il tipo di lente è riportato sull'etichetta apposta sulla confezione di cartone.

CARATTERISTICHE FISICHE:

Materiale della lente/parte aptica	Modello SIP: Copolimero acrilico idrofilo pieghevole con UV absorber. Modello SIPY: Copolimero acrilico idrofilo pieghevole con UV absorber e cromoforo per la filtrazione dei raggi di luce blu.
Caratteristiche dei materiali	Indice di rifrazione da umide (20˚C): 1.460 Indice di rifrazione all'interno dell'occhio (35˚C): 1.459
Trasmittanza spettrale	Modello SIP: Trasmittanza del 10% a 365 nanometri per IOL da +20,0 diottrie. Modello SIPY: Trasmittanza del 10% a 374 nanometri per IOL da +20,0 diottrie. Vedere il grafico a FIG.8 in cui X = lunghezza d'onda (nm) e Y = % di trasmittanza
Tipo di ottica	Asferica senza aberrazione
Potere	Da -10.0 a +40.0 diottrie
Dimensioni	Diametro del corpo: 6,0 mm; Diametro complessivo: da 10,5 mm a 11 mm nella gamma di diottrie; Angolo della porzione aptica: 0˚
Orientamento della lente	Il lato anteriore della lente è rivolto verso il lato anteriore dell'occhio. Come mostrato alla FIG.7, se le linee di orientamento sono in alto a destra (A) e in basso a sinistra (B), si sta guardando il lato anteriore della lente.

INDICAZIONI:
La lente Synthesis per camera posteriore è indicata nei pazienti adulti per l'impianto primario nella correzione visiva dell'afachia. La lente deve essere impiantata nel sacco capsulare.

CONTROINDICAZIONI E AVVERTENZE:
I medici che valutino la possibilità di eseguire un impianto della lente in una delle seguenti condizioni (riportate a titolo esemplificativo e non esaustivo) devono soppesare il potenziale rapporto tra rischi e benefici: infiammazione grave del segmento anteriore o posteriore o uveite ricorrenti; pazienti in cui la lente intraoculare può interferire con la possibilità di osservare, diagnosticare o trattare patologie del segmento posteriore; difficoltà chirurgiche che potrebbero aumentare la probabilità di complicazioni (ad es. emorragia persistente, gravi lesioni all'iride, pressione positiva non controllabile oppure perdita o prolasso significativo del vitreo); un'anatomia distorta dell'occhio per trauma precedente o difetto dello sviluppo per cui la IOL non possa essere supportata in modo appropriato; condizioni che danneggerebbero l'endotelio durante l'impianto; pazienti in cui né la capsula posteriore né le zonule sono sufficientemente intatte da fornire il supporto necessario; sospetta infezione microbica.
Come per qualunque altro intervento chirurgico, l'operazione non è priva di rischi. Tra le potenziali complicanze derivanti da un intervento di cataratta vi sono: infiammazione (iridociclite, membrana pupillare, infiammazione vitreale, EMC, TASS...), lesione endoteliale della cornea, endoftalmite, distacco della retina, vitrite, edema corneale, blocco pupillare, prolasso dell'iride, ipopion, glaucoma, perdita della ferita, ifema, atrofia dell'iride, prolasso del vitreo, decentramento o inclinazione della lente intraoculare, adesione del silicone alla lente intraoculare, depositi od opacità sull'ottica della lente intraoculare, e intervento chirurgico secondario (che comprendono, in modo non esaustivo, riparazione di ferita drenante, aspirazione del corpo vitreo, iridectomia, riposizionamento o riposizionamento della IOL e riparazione per distacco della retina).
La IOL deve essere impiantata conformemente alle seguenti istruzioni per l'uso. L'utilizzo improprio può mettere a rischio la salute del paziente.
Non utilizzare se si ritiene che la sterilità o la qualità del prodotto siano compromesse a causa del danneggiamento della confezione o di segni di fuoriuscite.
Non tentare di modificare o alterare il dispositivo o uno dei suoi componenti.
Non usare dopo la data di scadenza.
Non riutilizzare la lente e il sistema precaricato. Il riutilizzo può mettere a rischio la salute del paziente.
Non risterilizzare in quanto ciò può causare effetti collaterali indesiderati.

PRECAUZIONI:
- Conservare a temperatura ambiente. Evitare temperature inferiori a 5˚C e superiori a 45˚C. Non congelare.
- Controllare sulla confezione il modello di IOL, il potere e la data di scadenza prima di aprire l'imballaggio protettivo e la busta sterile individuale.
- Usare l'opportuno iniettore compatibile.
- La sterilità della IOL e dei componenti dell'iniettore è garantita solo se la busta sterile individuale è integra e non danneggiata.
- Risciacquare attentamente la IOL prima di procedere all'impianto. Immergere o sciacquare la lente intraoculare solo in soluzione salina bilanciata sterile.
- Prestare attenzione a rimuovere tutto il viscoelastico dalla superficie anteriore e posteriore della lente dopo l'inserimento nel sacco capsulare.
- Se si va ad eseguire una capsulotomia posteriore con laser YAG, accertarsi che il raggio laser sia indirizzato sulla zona d'azione situata leggermente dietro la capsula posteriore.

IMBALLAGGIO/STERILIZZAZIONE
Le lenti intraoculari Synthesis sono confezionate singolarmente in un contenitore sterile contenente soluzione salina posto all'interno di una busta e devono essere aperte solo in condizioni sterili. La IOL Synthesis è inserita in una camera di carico, fissata a un supporto e immersa completamente in una soluzione salina bilanciata sterile. Per garantire la tracciabilità della IOL, vengono fornite una scheda paziente ed etichette autoadesive. La lente precaricata Synthesis IOL è sterilizzata a vapore.

ISTRUZIONI PER L'USO:
1. Prima dell'intervento, il medico deve determinare il potere della lente che andrà a impiantare usando metodi di calcolo. La costante A consigliata sulla confezione della lente deve essere utilizzata solo come riferimento.
2. Prima di procedere all'impianto, controllare sulla confezione che il tipo, il potere e la configurazione della lente siano appropriati.
3. Aprire la confezione e rimuovere la busta sterile contenente il contenitore della lente. Aprire lentamente la busta ed estrarre il contenitore in campo sterile. Esaminare il contenitore. Accertarsi che non sia danneggiato e che il sigillo sia integro. Tenere il contenitore con una mano. Afferrare la linguetta di apertura e rimuovere la pellicola di copertura tenendo il contenitore in posizione orizzontale per esporre la camera di carico.
Fare riferimento alle immagini allegate per posizionare la camera di carico nell'iniettore compatibile.
4. Rimuovere dal contenitore la camera di carico contenente la lente tirando verso l'alto l'anello superiore del supporto. Non rimuovere il supporto della lente in questa fase.
5. Sciacquare accuratamente la camera di carico contenente la lente con una soluzione salina bilanciata sterile, evitando il contatto con i guanti. Non toccare la lente.
6. Prima di inserire la camera di carico nell'iniettore, assicurarsi che lo stantuffo sia in posizione ritirata. Inserire la camera di carico contenente la lente nell'apertura dell'iniettore compatibile finché non si blocca in posizione (FIG. 1).
7. Sciacquare la lente con una soluzione salina bilanciata sterile attraverso la parte posteriore della camera di caricamento, tenendo l'iniettore inclinato per consentire il flusso della soluzione salina bilanciata sterile attraverso la punta dell'iniettore (FIG. 2).
8. Avendo cura di non toccare la IOL, applicare il viscoelastico attraverso il foro di riempimento del supporto in direzione della punta della cartuccia (FIG. 3) e alla fine della camera di carico (FIG. 4). Assicurarsi che il viscoelastico riempa la punta dell'iniettore e passi in parte sotto la lente.
9. Spingere lo stantuffo in avanti fino a che la protezione in silicone non si avvicina al supporto della lente.
10. Rimuovere il supporto della lente dalla camera di carico afferrando l'anello del supporto con due dita, ribaltare la cerniera inferiore del supporto con il pollice e sollevare (FIG. 5).
11. Verificare che la lente sia posizionata al centro della camera di carico e chiudere le alette della camera di carico (FIG. 6). Quando scatta il meccanismo "click-lock", la lente è in posizione. Il sistema è pronto per l'iniezione.
Per una descrizione dettagliata, fare riferimento alle istruzioni per l'uso fornite con l'iniettore compatibile.
12. Premere in avanti lo stantuffo dell'iniettore per spingere la lente. Impiantare la lente con la smussatura della punta dell'iniettore rivolta verso l'occhio del paziente. Il lato anteriore della lente è rivolto verso la cornea quando le linee di orientamento sono in alto a destra (A) e in basso a sinistra (B) (FIG. 7).
Utilizzare solo una soluzione viscoelastica di viscosità da bassa a media.
Utilizzare solo il sistema di iniezione fornito con la lente Synthesis precaricata.
È possibile eseguire diverse procedure chirurgiche, spetta al chirurgo selezionare la procedura appropriata per il paziente.

SIMBOLI USATI SULL'ETICHETTA:

Simbolo	Descrizione
D	Diottrie
ØB	Diametro del corpo
ØT	Diametro complessivo

Synthesis Preloaded

SOCZEWKA ASFERYCZNA WOLNA OD ABERRACJI, FABRYCZNIE ZAŁADOWANA

Modele SIP i SIPY (żółte)

PL SOCZEWKA WEWNĄTRZGAŁKOWA

OPIS:
Soczewka wewnątrzgałkowa (IOL) Synthesis to pojedyncza, tylnokomorowa soczewka pochłaniająca promieniowanie UV, zastępująca naturalną soczewkę oka u dorosłych pacjentów pseudofakijnych. Soczewka wewnątrzgałkowa (IOL) Synthesis ma asferyczną optykę, niwelującą aberrację sferyczną. Soczewka wewnątrzgałkowa Synthesis, fabrycznie załadowana, jest dostarczana z systemem implantacyjnym Accuject Pro, aby zapewnić sterylną, kontrolowaną i bezdotykową implantację soczewki w torebce soczewki. Soczewka wewnątrzgałkowa (IOL) Synthesis jest dostarczana w 2 rodzajach - model SIP lub SIPY. Rodzaj soczewki określony jest na etykiecie tekturowego pudełka.

CECHY FIZYCZNE:

Soczewka/ materiał części haptycznej	Model SIP: Zwijalny, hydrofilny kopolimer akrylowy zawierający filtr UV. Model SIPY: Zwijalny, hydrofilny kopolimer akrylowy zawierający filtr UV i chromofor pełniący rolę filtra światła niebieskiego.
Charakterystyka materiału	Wskaźnik refrakcji, gdy soczewka jest wilgotna w temp. 20˚C: 1.460 Wskaźnik refrakcji gdy soczewka jest w oku, w temp.35˚C: 1.459
Transmitancja widmowa	Model SIP: Transmitancja 10% przy 365 nanometrach dla soczewki wewnątrzgałkowej+20.0 dioptrii Model SIPY: Transmitancja 10% przy 374 nanometrach dla soczewki wewnątrzgałkowej+20.0 dioptrii Patrz RYS.8 na wykresie oś X = długość fali (nm) i oś Y = transmitancja w %
Typ optyki	Wolna od aberracji sferycznej
Moc	od -10.0 do +40.0 dioptrii
Wymiary	Średnica korpusu soczewki: 6.0 mm; średnica całkowita: 10.5 mm do 11 mm przez zakres dioptrii; Ukątowanie części haptycznej: 0˚
Orientacja soczewki	Przednia strona soczewki jest skierowana do przedniej części gałki ocznej. Zgodnie z RYS.7, przy orientacji góra w prawo (A) i dół w lewo (B), widoczna jest przednia strona soczewki.

WSKAZANIA:
Soczewka Synthesis do tylnej komory oka wskazana jest do implantacji pierwotnej w celu korekcji wzroku u dorosłych pacjentów z afakią. Soczewka jest przeznaczona do implantacji wewnątrz torebki soczewki.

PRZECIWWSKAZANIA I OSTRZEŻENIA
Lekarze rozważający implantację soczewki w jednej z wymienionych poniżej sytuacji (lista nie jest wyczerpująca), muszą określić stosunek korzyści z operacji do potencjalnych zagrożeń: nawracające ostre zapalenie przedniego lub tylnego segmentu lub zapalenie błony naczyniowej; pacjenci, u których soczewka może mieć wpływ na zdolność wykrywania, diagnozowania i leczenia chorób tylnego segmentu oka; trudności podczas zabiegu chirurgicznego mogące zwiększać ryzyko powikłań (między innymi: uporczywe krwawienie, znaczne uszkodzenie tęczówki, niekontrolowane dodatnie ciśnienie lub znaczne, wypadnięcie ciała szklistego lub ubytek); zniekształcenie gałki ocznej spowodowane wcześniejszym urazem lub wada rozwojowa, których leczenie przy pomocy soczewki wewnątrzgałkowej jest niemożliwe; okoliczności, które mogą spowodować uszkodzenie śródbłonka podczas implantacji; pacjenci, u których ani tylna torebka ani obwódka nie są na tyle nienaruszone, aby stanowić wsparcie; podejrzane zakażenia bakteryjne.
Tak jak każda operacja chirurgiczna, zabieg ten niesie ze sobą ryzyko powikłań. Potencjalne powikłania zabiegu usunięcia zaćmy obejmują między innymi: zapalenia (zapalenie tęczówki i ciała rzęskowego, błona źrenicza, zapalenie ciała szklistego, torbielowaty obrzęk plamki (CME), zespół toksycznego uszkodzenia przedniego odcinka oka (TASS)...), uszkodzenie śródbłonka rogówki, zapalenie wnętrza gałki ocznej, odwarstwienie siatkówki, obrzęk rogówki, niereagująca źrenica, wypadnięcie tęczówki, ropostek, jaskra, rozejście się rany, wylew krwi do komory przedniej oka, atrofia tęczówki, wypadnięcie ciała szklistego, decentracja lub przechylenie soczewki wewnątrzgałkowej, przyleganie silikonu do soczewki, zmętnienie soczewki wewnątrzgałkowej oraz kolejny zabieg chirurgiczny (między innymi, zaopatrzenie rany, aspiracja ciała szklistego, irydektomia, repozycja lub wymiana soczewki wewnątrzgałkowej i rozwarstwienie siatkówki).
Soczewki wewnątrzgałkowe muszą być implantowane zgodnie z poniższymi wskazówkami dotyczącymi stosowania. Niewłaściwe użycie soczewki może stanowić zagrożenie dla zdrowia pacjenta.
Nie należy używać produktu, jeśli jego sterylność lub jakość mogły zostać naruszone z powodu uszkodzenia opakowania lub nieszczelności.
Nie podejmować prób modyfikacji lub zmian tego wyrobu lub jego komponentów.
Nie używać soczewek po upływie terminu ważności.
Nie używać ponownie soczewki ani aplikatora. Ponowne użycie może stanowić zagrożenie dla zdrowia pacjenta.
Nie poddawać ponownej sterylizacji, gdyż może to spowodować niepożądane skutki uboczne.

ŚRODKI OSTROŻNOŚCI:
- Przechowywać w temperaturze pokojowej. Unikać temperatury niższej niż 5˚C i wyższej niż 45˚C. Nie zamrażać.
- Model soczewki wewnątrzgałkowej, moc i data ważności powinny zostać sprawdzone przed otwarciem opakowania ochronnego i indywidualnej sterylnej torebki.
- Należy użyć odpowiedniego, kompatybilnego iniektora
- Sterylność soczewki wewnątrzgałkowej i iniektora jest zagwarantowana tylko wtedy, gdy indywidualna, sterylna torebka nie została otwarta lub uszkodzona.
- Soczewki wewnątrzgałkowe muszą być dokładnie opłukane przed implantacją. Nie należy moczyć lub płukać soczewki wewnątrzgałkowej innym roztworem niż zrównoważony, sterylny roztwór soli.
- Po implantacji do torebki soczewki, należy zadbać o usunięcie wszystkich materiałów wiskoelastycznych z przedniej i tylnej powierzchni soczewki .
- Jeśli wykonywana jest tylna kapsuloktomia przy pomocy lasera YAG, należy upewnić się, że wiązka światła lasera pada nieznacznie za tylną torebką.

OPAKOWANIE / STERYLIZACJA:
Soczewka wewnątrzgałkowa Synthesis fabrycznie załadowana jest zapakowana do torebki i fiolki zawierającej zrównoważony roztwór soli. Opakowanie należy otwierać w warunkach sterylnych. Soczewka wewnątrzgałkowa Synthesis jest umieszczona w komorze ładowania i podtrzymywana przez uchwyt soczewki, wszystkie elementy zanurzone są w roztworze BSS. W kartonowym opakowaniu dostarczona jest karta pacjenta i samoprzylepne etykiety dla zapewnienia identyfikalności soczewki wewnątrzgałkowej. Soczewka wewnątrzgałkowa Synthesis, fabrycznie załadowana, jest sterylizowana parą wodną.

WSKAZÓWKI DOTYCZĄCE STOSOWANIA:
1. Przed operacją lekarz powinien określić moc soczewki, która będzie implantowana, stosując metody biometryczne. Stałe A podane na opakowaniu soczewki wewnątrzgałkowej powinny być stosowane wyłącznie jako wskazówka.
2. Przed implantacją, należy sprawdzić na opakowaniu model, moc i prawidłową konfigurację.
3. Otworzyć kartonowe opakowanie i wyjąć sterylną torebkę zawierającą fiolkę z soczewką. Powoli zedrzeć folię z opakowania, wyjąć fiolkę i umieścić ją w jałowym polu. Dokładnie sprawdzić fiolkę. Upewnić się, że fiolka nie jest uszkodzona a szczelne zamknięcie nie jest naruszone. Trzymać fiolkę w jednej ręce. Chwycić wypustkę folii i zedrzeć folię trzymając fiolkę w pozycji poziomej, aby odsłonić komorę ładowania.
Umieszczenie komory ładowania w kompatybilnym iniektorze pokazane zostało na dołączonych ilustracjach.
4. Wyjąć z fiolki komorę ładowania zawierającą soczewkę, pociągając za górną pętlę uchwytu soczewki. Nie należy wyjmować uchwytu soczewki.
5. Dokładnie opłukać komorę ładowania zawierającą soczewkę, sterylnym zrównoważonym roztworem soli, unikając kontaktu z rękawicami. Nie dotykać soczewki.
6. Przed wprowadzeniem komory ładowania do iniektora, należy upewnić się, że tłok jest odciągnięty. Wprowadzić komorę ładowania zawierająca soczewkę do otworu kompatybilnego korpusu iniektora tak, by zablokował się we właściwej pozycji (RYS. 1).
7. Opłukać soczewkę sterylnym, zrównoważonym roztworem soli przez tylną część komory ładowania, trzymając iniektor tak, aby był przechylony, umożliwiając przepływ sterylnego, zrównoważonego roztworu soli przez końcówkę iniektora (RYS. 2).
8. Uważając, aby nie dotykać soczewki wewnątrzgałkowej, zaaplikować materiał wiskoelastyczny przez otwór wypełnienia uchwytu soczewki w kierunku końcówki kartridża (RYS. 3) i na końcu komory ładowania (RYS. 4). Upewnić się, że materiał wiskoelastyczny wypełnia końcówkę iniektora i przemieszcza się w połowie drogi pod soczewką.
9. Popchnąć tłok aż silikonowa poduszka zbliży się do uchwytu soczewki.
10. Wyjąć uchwyt soczewki z komory ładowania, chwytając pętlę uchwytu dwoma palcami i zwalniając kciukiem dolny zawias uchwytu soczewki, podnieść do góry. (RYS. 5).
11. Sprawdzić czy soczewka jest ustawiona centralnie w komorze ładowania a następnie zamknąć skrzydełka komory ładowania (RYS. 6). Kliknięcie mechanizmu blokady świadczy o bezpiecznym umieszczeniu soczewki. System jest gotowy do iniekcji.
Szczegółowy opis znaleźć można w instrukcji użycia dostarczonej z kompatybilnym iniektorem.
12. Przesunąć tłok iniektora do przodu, aby wypchnąć soczewkę. Wszczepić soczewkę tak, aby skośna końcówka iniektora skierowana była w dół gałki ocznej pacjenta. Przednia strona soczewki jest skierowana do rogówki, przy orientacji góra w prawo (A) i dół w lewo (B) (RYS. 7).
Powinny być stosowane wyłącznie roztwory wiskoelastyczne o niskiej do średniej lepkości.
Należy stosować wyłącznie system iniekcyjny dostarczony z załadowaną fabrycznie soczewką Synthesis.
Mogą być stosowane różne procedury chirurgiczne, chirurg powinien wybrać procedurę, która jest najbardziej odpowiednia dla pacjenta.

SYMBOLE UŻYTE NA ETYKIECIE:

Symbol	Opis
D	Dioptria
ØB	Średnica korpusu
ØT	Średnica całkowita

Synthesis Preloaded

Предварительно загруженная безаберрационная асферическая линза

Модели SIP и SIPY (жёлтая)

RU ИНТРАОКУЛЯРНАЯ ЛИНЗА

ОПИСАНИЕ
Интраокулярная линза (ИОЛ) фирмы Synthesis представляет собой монолитную заднекамерную ИОЛ, поглощающую ультрафиолетовое (УФ) излучение, предназначенную для замены естественного хрусталика у псевдофакичных взрослых пациентов. Для обеспечения отсутствия сферической аберрации ИОЛ фирмы Synthesis имеет асферическую оптику. Предварительно загруженная интраокулярная линза поставляется с системой доставки Accuject Pro, обеспечивающей бесконтактную доставку линзы асептическим,контролируемым методом в капсулярный мешок. ИОЛ Preloaded Synthesis поставляется в виде 2 разных моделей: SIP и SIPY. Тип линзы указан на этикетке на картонной коробке.

ФИЗИЧЕСКИЕ ХАРАКТЕРИСТИКИ

Материал линзы / гаптики	Модель SIP: Гибкий гидрофильный сополимер акрила, содержащий поглотитель УФ-излучения. Модель SIPY: Гибкий гидрофильный сополимер акрила, содержащий поглотитель УФ излучения и хромофор, фильтрующий синий свет.
Характеристики материала	Коэффициент преломления во влажном состоянии при температуре 20 ˚C: 1,460 Коэффициент преломления в глазу при температуре глаза 35 ˚C: 1,459
Спектральная прозрачность	Модель SIP: 10% при длине волны 365 нм для ИОЛ +20,0 дптр. Модель SIPY: 10% при длине волны 374 нм для ИОЛ +20,0 дптр. См. **рис. 8**, где на оси X отложены значения длины волны (нм), а по оси Y — прозрачность (%)
Тип оптики	Асферическа безаберрационная

FIG. 1

FIG. 2

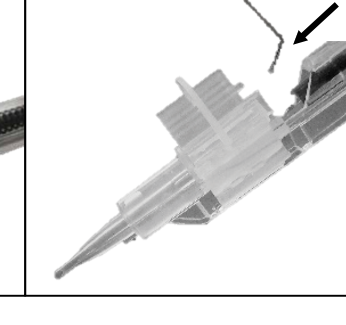

FIG. 3

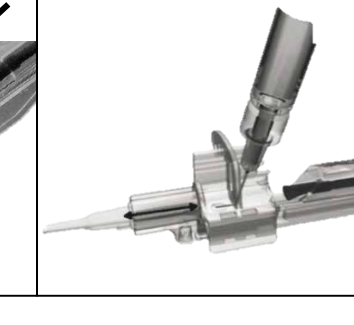

FIG. 4

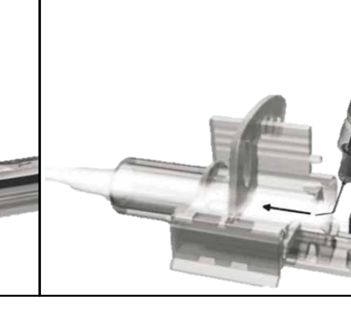

FIG. 5

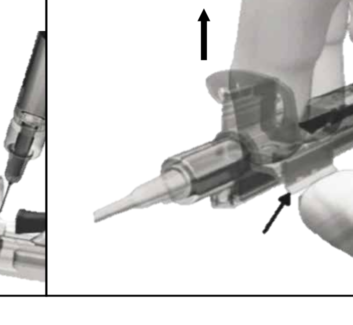

FIG. 6

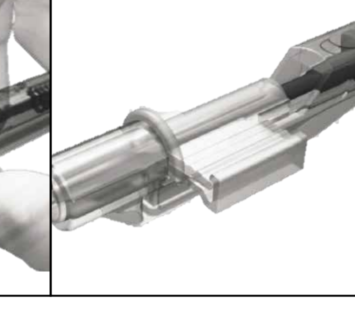

FIG. 7

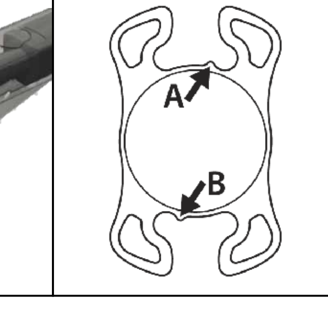

FIG. 8

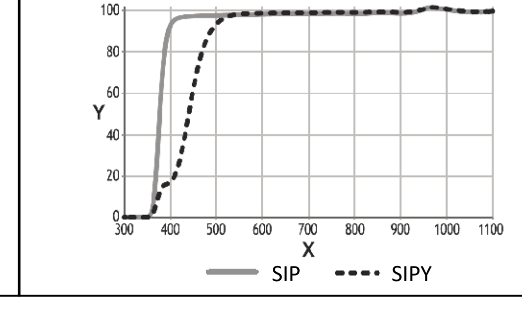

Оптическая сила	От -10,0 до +40,0 дптр
Размеры	Диаметр оптического тела: 6,0 мм; общий диаметр: от 10,5 до 11 мм в диоптрическом диапазоне; Гаптический угол: 0˚
Ориентация линзы	Передняя сторона линзы обращена к передней стороне глаза. Как показано на рис. 7, когда ориентационные элеиенты расположены вверху справа (A) и внизу слева (B) передняя сторона линзы обращена к наблюдателю.

ПОКАЗАНИЯ

Заднекамерная линза фирмы Synthesis показана для первичной имплантации с целью коррекции зрения у взрослых пациентов при афакии. Линза предназначена для имплантации в капсулярный мешок.

ПРОТИВОПОКАЗАНИЯ И ПРЕДОСТЕРЕЖЕНИЯ

С врачебной точки зрения, при любом из следующих обстоятельств (но не ограничиваясь этим) следует оценивать соотношение потенциальных рисков и преимуществ: рецидивирующее тяжелое воспаление переднего или заднего сегмента или увеит; пациенты, у которых ИОЛ может повлиять на способность наблюдать, диагностировать или лечить заболевания заднего сегмента; хирургические трудности с повышением потенциала для осложнений (таких как постоянное кровотечение, существенное повреждение радужной оболочки, неконтролируемое положительное давление или существенный пролапс или потеря стекловидного тела и др.); деформация глаза вследствие предшествовавшей травмы или дефекта развития, в результате которых надлежащая фиксация ИОЛ становится невозможной; обстоятельства, которые могут привести к повреждению эндотелия в процессе имплантации; пациенты, у которых ни задняя камера, ни поясок недостаточно целы для обеспечения фиксации; подозрение на микробную инфекцию.

Как и при любом хирургическом вмешательстве, имеет место риск. Потенциальные осложнения хирургического лечения катаракты могут включать, но не ограничиваться следующим: воспаление (иридоциклит, зрачковая мембрана. воспаление стекловидного тела, цистоидный макулярный отёк,токсичный синдром переднего сегмента...), корнеальное повреждение эндотелия, эндофтальмит, отслоение сетчатки, отёк роговицы, закупорка зрачка, пролапс радужной оболочки, гипопион, глаукома, просачивание раны, гифема, атрофия радужной оболочки, пролапс стекловидного тела, смещение или наклон ИОЛ, адгезия силикона ИОЛ, оптические налёты или помутнения и вторичные хирургические вмешательства (такие как устранение просачивания раны, аспирация стекловидного тела, иридэктомия, переустановка или замена ИОЛ, репарация отслоения сетчатки и др.).

ИОЛ следует имплантировать в соответствии со следующими указаниями. Ненадлежащее использование может угрожать здоровью пациента.

Не используйте ИОЛ, стерильность или качество которой находятся под сомнением в результате повреждения упаковки или признаков утечки.

Не пытайтесь видоизменять или переделывать устройство или его компоненты.

Не используйте линзу после истечения срока годности.

Не используйте линзу и встроенную систему повторно. Повторное использование может угрожать здоровью пациента.

Не стерилизуйте ИОЛ повторно, поскольку это может привести к нежелательным побочным эффектам.

МЕРЫ ПРЕДОСТОРОЖНОСТИ

- Хранить при комнатной температуре. Избегать хранения при температуре ниже 5 ˚C и выше 45˚C. Не допускать замораживания.
- Перед вскрытием защитной упаковки и индивидуального стерильного пакета следует проверить модель ИОЛ, её оптическую силу и срок годности.
- Использовать соответствующий совместимый инжектор.
- Стерильность ИОЛ и частей инжектора гарантируется, только если индивидуальные стерильные пакеты не были вскрыты или повреждены.
- Перед имплантацией ИОЛ следует тщательно промыть. Не замачивать и не промывать ИОЛ в каких-либо других растворах, кроме стерильного сбалансированного солевого раствора.
- При удалении вискоэластика с передней и задней поверхностей линзы после имплантации в капсулярный мешок следует соблюдать осторожность.
- В случае проведения задней капсулотомии с помощью лазера на иттрий-алюминиевом гранате (YAG-лазера), необходимо обеспечить фокусировку луча лазера несколько позади задней капсулы.

УПАКОВКА И СТЕРИЛИЗАЦИЯ

ИОЛ фирмы Synthesis упакована в индивидуальный пакет и во флакон со сбалансированным солевым раствором, вскрытие которых следует выполнять в стерильных условиях. ИОЛ помещена в загрузочную камеру, зафиксированную держателем линзы, и погруженную вместе с ним в основной соляной раствор. Для обеспечения отслеживаемости ИОЛ картонная коробка снабжена карточкой пациента и самоклеющимися этикетками. Предварительно загруженная ИОЛ фирмы Synthesis стерилизована паром.

УКАЗАНИЯ ПО ИСПОЛЬЗОВАНИЮ

1. Перед хирургическим вмешательством врач должен определить оптическую силу линзы, подлежащей имплантации, методом вычисления. Рекомендованные значения постоянных А, указанные на картонной коробке с линзой, являются только ориентировочными.
2. Перед имплантацией следует осмотреть упаковку ИОЛ и выяснить её модель, оптическую силу и надлежащую конфигурацию.
3. Откройте картонную коробку и извлеките стерилизованный пакет, содержащий флакон с линзой. Постепенно снимите пакет, чтобы флакон остался в стерильной среде. Осмотрите флакон. Убедитесь в том, что он не поврежден и не вскрыт. Удерживайте флакон в одной руке. Захватите язычок и потяните крышку из фольги от себя, удерживая флакон в горизонтальном положении, чтобы открыть загрузочную камеру.
   Расположение загрузочной камеры в совместимом инжекторе показано на прилагаемых рисунках.
4. Извлеките загрузочную камеру, содержащую линзу, из флакона, потянув за верхнюю петлю держателя линзы. При этом не извлекайте держатель линзы.
5. Тщательно промойте загрузочную камеру, содержащую линзу, стерильным сбалансированным солевым раствором, избегая контакта с перчатками. Не касайтесь линз.
6. Перед введением загрузочной камеры в инжектор убедитесь в том, что поршень находится в отведенном положении. Введите загрузочную камеру, содержащую линзу, в отверстие корпуса совместимого инжектора до фиксации в целевом положении (рис. 1).
7. Промойте линзу стерильным сбалансированным солевым раствором через заднюю часть загрузочной камеры, удерживая инжектор наклоненным, чтобы обеспечить поток стерильного сбалансированного солевого раствора через наконечник инжектора (рис. 2).
8. Осторожно, не касаясь ИОЛ, введите вискоэластик через наполнительное отверстие держателя линзы в направлении наконечника картриджа (рис. 3) и на конце загрузочной камеры (рис. 4). Обеспечьте заполнение наконечника инжектора вискоэластиком и его продвижение на половину расстояния под линзой.
9. Нажимайте на поршень до тех пор, пока силиконовая подушка не достигнет держателя линзы.
10. Извлеките держатель линзы из загрузочной камеры, захватив петлю держателя двумя пальцами, и переверните нижний шарнир держателя линзы большим пальцем, просто подняв его (рис. 5).
11. Убедитесь в том, что линза расположена по центру загрузочной камеры, и закройте ее створки (рис. 6). При срабатывании механизма фиксации с защелкой линза надёжно фиксируется на месте. Система готова для инжекции.
    Подробное описание содержится в инструкции по эксплуатации, поставленной вместе с совместимым инжектором.
12. Прижать поршень инжектора к линзе до упора. Введите линзу с наклоном наконечника инжектора, обращенным к глазу пациента. Передняя сторона линзы обращена к роговице, если ориентационные элементы расположены справа вверху (A) и слева внизу (B) (рис. 7).
    Следует использовать только раствор вискоэластика низкой или средней вязкости.
    Следует использовать только инъекционную систему, предоставленную вместе с предварительно загруженной линзой Synthesis.
    Возможно проведение различных хирургических вмешательств, и хирург должен выбрать процедуру, подходящую для пациента.

СИМВОЛЫ, ИСПОЛЬЗУЕМЫЕ НА ЭТИКЕТКАХ

Символ	Описание
D	Диоптрия
ØB	Диаметр оптического тела
ØT	Общий диаметр

Synthesis Preloaded

수차가 제거된 사전 장착식 비구면 렌즈

모델 SIP 및 SIPY(노란색)

(KO) 안구내 렌즈

설명:

Synthesis 안구내 렌즈(IOL)는 일체형 자외선(UV) 흡수 후안방 IOL로 위수정체 성인 환자의 자연 수정체를 대체하기 위해 개발되었습니다. Synthesis IOL은 비구면 광학체로 구면 수차가 없도록 설계되었습니다. 사전 장착식 안구내 Synthesis 렌즈는 Accuject Pro 딜리버리 시스템과 함께 제공되어, 접촉 없이 제어하는 방식으로 멸균 렌즈를 안구에 주입할 수 있습니다. 사전 장착식 Synthesis IOL은 모델 SIP 또는 SIPY의 2 가지 다른 모델로 제공됩니다. 렌즈 유형은 포장 상자의 라벨을 참조하십시오.

물리적 특성:

렌즈/햅틱 소재	모델 SIP: UV 흡수제를 함유한 접이식 친수성 아크릴 코폴리머. 모델 SIPY: UV 흡수제 및 블루 라이트 필터링 발색단을 함유한 접이식 친수성 아크릴 코폴리머.
소재 특성	20°C의 습식 상태에서 굴절률: 1.460 35°C의 안구내 상태에서 굴절률: 1.459
분광 투과율	모델 SIP: +20.0 디옵터 IOL의 경우 365 나노미터에서 10% 투과율. 모델 SIPY: +20.0 디옵터 IOL의 경우 374 나노미터에서 10% 투과율. **그림 8**에서 표의 X 값 = 파장(nm) 및 Y 값 = % 투과율을 참조하십시오
광학체 유형	비구면 수차 없음
도수	-10.0 ~ +40.0 디옵터
치수	바디 직경: 6.0 mm, 전체 직경: 디옵터 범위에서 10.5 mm ~ 11 mm; 햅틱 각: 0°
렌즈 방향	렌즈의 앞쪽이 안구의 앞쪽에서 위로 향해 있습니다. 그림 7에 표시된 것처럼 방향 지정체가 우측 상단(A) 및 좌측 하단(B)에 있을 때, 시술자는 렌즈의 앞쪽을 바라보고 있는 것입니다.

지시법:

Synthesis 후안방 렌즈는 성인 환자의 무수정체증 시력 보정을 위해 1차 이식물로 지시됩니다. 이 렌즈는 수정체낭에 이식하도록 설계되었습니다.

사용 금지 사유 및 경고:

다음과 같은 상황(이에 제한되지 않음)에서 렌즈 이식을 고려하는 의사는 잠재적 위험성/유익성 비를 따져 봐야 합니다: 심각한 전안부 또는 후안부 염증이나 포도막염의 재발; IOL이 환자의 후안부 질환을 검사하거나 진단하거나 치료하는 데 영향을 줄 수 있는 경우; 합병증의 가능성을 높이는 외과적 어려움(다음 사항을 포함하며 이에 제한되지 않음: 지속적 출혈, 심각한 홍채 손상, 정압 조절 불가, 심각한 유리체 탈출 또는 상실)이 있는 경우; 과거 외상 또는 발달 장애로 인해 안구가 왜곡되어 적절한 IOL 지원이 불가능한 경우; 이식 중에 각막 내피를 손상시킬 수 있는 상황; 환자의 후낭 또는 소대가 온전하지 않아 지원을 제공할 수 없는 경우; 미생물 감염이 의심되는 경우 등이 해당됩니다.

시술 절차에 연관된 위험이 있습니다. 백내장 수술의 잠재적 합병증에는 다음이 포함될 수 있으며, 이에 제한되지 않습니다: 염증(홍채 모양체염, 동공 염막, 유리체 염증, CME, TASS ...), 각막 내피 손상, 내안구염, 망막박리, 각막부종, 동공 차단, 홍채 탈출, 전방축농, 녹내장, 창상 누출, 전방출혈, 홍채 위축, 유리체 탈출, IOL 중심이탈 또는 기울어짐, IOL 실리콘 접착, IOL 광학적 축적물 또는 불투명화 및 2차 외과 수술 개입(창상 누출 치료, 유리체 흡인, 홍채 절제술, IOL 재배치 또는 교체 및 망막박리 치료 등이 포함되며, 이에 제한되지 않음).

다음 사용 지침에 따라 IOL을 이식해야 합니다. 잘못 사용하면 환자의 건강을 해칠 수 있습니다.

포장이 손상되거나 누출 징후가 있어 제품 멸균 또는 품질이 훼손된 것 같으면 해당 제품을 사용하지 마십시오.

장치 또는 구성품을 개조하거나 변경하려고 시도하지 마십시오.

유효 기간이 지났으면 렌즈를 사용하지 마십시오.

렌즈 및 사전 장착식 시스템을 재사용하지 마십시오. 재사용하면 환자의 건강에 심각한 해를 끼칠 수 있습니다.

바람직하지 않은 부작용을 초래할 수 있으니 재멸균하지 마십시오.

주의 사항:

- 상온에서 보관하십시오. 5°C 미만 및 45°C를 초과하는 온도는 피하십시오. 얼리지 마십시오.
- 보호 포장을 열기 전에 그리고 각각의 멸균 파우치 포장을 열기 전에 IOL 모델, 도수 및 유효 기간을 확인해야 합니다.
- 호환되는 적절한 인젝터를 사용하십시오.
- 각각의 멸균 파우치 포장을 뜯거나 손상시키지 않은 경우에만 IOL 및 인젝터 부품의 멸균 상태가 보장됩니다.
- 이식 전에 IOL을 조심스럽게 씻어야 합니다. 멸균 상태의 평형염액이 아닌 다른 용액으로 IOL을 적시거나 씻지 마십시오.
- 렌즈를 수정체낭에 이식한 후, 렌즈의 전안부 및 후안부 표면에서 모든 점탄성 물질을 조심스럽게 제거해야 합니다.
- YAG 레이저 후부 피막 절제술을 수행하는 경우, 레이저 빔 초점이 후부 피막의 약간 뒤에 맺히도록 해야 합니다.

포장/멸균:

사전 장착식 Synthesis IOL은 파우치 및 유리병에 개별적으로 포장되어 있고, 유리병에는 평형염액이 들어 있으므로 멸균 상태에서 개봉해야 합니다. Synthesis IOL은 장전실 내에서 렌즈 홀더로 고정되어 있으며 전체가 BSS에 잠겨 있습니다. 박스 안에는 환자 카드 및 자체 접착식 라벨이 있어 IOL 기록을 추적할 수 있습니다. 사전 장착식 Synthesis IOL은 스팀으로 소독되었습니다.

사용법:

1. 의사는 계산 방법을 이용하여, 이식하려는 렌즈의 도수를 수술 전에 파악해야 합니다. 렌즈 박스에 기재된 권장 A 상수는 단순 지침용입니다.
2. 이식 전에 렌즈 포장을 살펴 보면서 모델, 도수 및 적절한 구성을 자세히 확인하십시오.
3. 상자를 열고 렌즈 유리병이 담긴 멸균 파우치를 꺼내십시오. 파우치를 조심스럽게 벗겨서 열고 유리병을 멸균대 위에 놓으십시오. 유리병을 검사하십시오. 유리병이 손상되지 않았는지 또는 밀봉 상태가 온전한지 확인하십시오. 유리병을 한 손으로 잡으십시오. 유리병을 수평 위치로 잡은 상태에서 포일 덮개의 당김 탭을 잡고 포일 덮개를 벗겨서 장전실을 노출시키십시오.
   동봉된 그림을 참조하면서 장전실을 호환 인젝터 안에 배치하십시오.
4. 렌즈 홀더의 상단 루프를 위로 당겨서, 렌즈가 들어 있는 장전실을 렌즈 유리병에서 꺼내십시오. 이 경우 렌즈 홀더를 제거하지 마십시오.
5. 멸균 상태의 평형염액과 함께 렌즈가 담겨 있는 장전실을 장갑과의 접촉을 피하면서 철저히 헹구십시오. 렌즈를 만지지 마십시오!
6. 장전실을 인젝터에 삽입하기 전에 플런저가 후퇴 위치에 있는지 확인하십시오. 렌즈가 들어 있는 장전실이 제자리에 고정될 때까지 장전실을 호환 인젝터 본체의 개방구에 삽입하십시오(그림 1).
7. 멸균 상태의 평형염액이 인젝터의 끝부분을 통해 흐르도록 인젝터를 기울인 채로 장전실 후면을 통해 멸균 상태의 평형염액으로 렌즈를 씻으십시오(그림 2).
8. IOL을 만지지 않도록 주의하면서 렌즈 홀더의 충전구를 통해 점탄성 물질을 카트리지 팁 방향으로 주입하고(그림 3) 장전실의 끝까지 채우십시오(그림 4). 점탄성 물질이 인젝터 팁을 채우고 렌즈 아래로 반쯤 이동하는지 확인하십시오.
9. 실리콘 쿠션이 렌즈 홀더에 도달할 때까지 플런저를 눌러서 전진시키십시오.
10. 홀더의 루프를 두 손가락으로 잡고 렌즈 홀더의 하단 경첩을 엄지손가락으로 뒤집어 올려서 장전실에서 렌즈 홀더를 제거하십시오(그림 5).
11. 렌즈가 장전실의 중앙에 배치되었는지 확인하고 장전실의 윙을 닫으십시오(그림 6). "클릭 록" 메커니즘이 체결되면, 렌즈가 제자리에 안전하게 고정됩니다. 시스템의 주입 준비가 완료되었습니다.
    자세한 설명은 호환 인젝터와 함께 제공된 사용 설명서를 참조하십시오.
12. 인젝터 플런저를 눌러서 렌즈를 밀어내십시오. 인젝터 팁의 비스듬한 면이 환자 눈을 향하게 한 상태에서 렌즈를 이식하십시오. 방향 지정체가 우측 상단(A) 및 좌측 하단(B)에 있을 때 각막에 대해 렌즈의 앞쪽이 위로 향한 상태로 있는 것입니다(그림 7).
    반드시 점도가 낮거나 중간 정도인 점탄성 용액을 사용해야 합니다.
    사전 장착식 Synthesis 렌즈에 함께 제공된 주입 시스템만 사용해야 합니다.
    활용할 수 있는 수술 절차가 다양하게 있으므로, 외과의사는 환자에게 맞는 적절한 절차를 선택해야 합니다.

라벨에 사용된 기호:

기호	설명
D	디옵터
ØB	바디 직경
ØT	전체 직경

Synthesis Preloaded

BEZABERAČNÍ ASFÉRICKÁ ČOČKA VLOŽENÁ V ZAVADĚČI

Modely SIP a SIPY (žlutý)

(CZ) NITROOČNÍ ČOČKY

POPIS:

Nitrooční čočka Synthesis (NOČ) je jednokusová zadněkomorová NOČ absorbující ultrafialové (UV) záření, která byla vyvinuta pro náhradu přirozené oční čočky u pseudofakických dospělých pacientů. NOČ Synthesis má asférickou optiku bez sférické aberace. Nitrooční čočka Synthesis se dodává se zaváděcím systémem Accuject Pro, který zajistí sterilní, kontrolovaný a bezdotykový způsob zavedení čočky do čočkového pouzdra. NOČ Synthesis vložená v zavaděči se dodává ve 2 různých modelech - SIP nebo SIPY. Typ čočky naleznete na kartonové krabičce.

FYZIKÁLNÍ VLASTNOSTI:

Čočka/haptický materiál	Model SIP: Přehnutelný hydrofilní akrylátový kopolymer obsahující absorbér UV záření. Model SIPY: Přehnutelný hydrofilní akrylátový kopolymer obsahující absorbér UV záření a chromofor filtrující modré světlo.
Vlastnosti materiálu	Index lomu v mokrém stavu při 20 ˚C: 1,460 Index lomu v mokrém stavu při 35 ˚C: 1,459
Spektrální propustnost	Model SIP: 10% propustnost při 365 nm pro NOČ s +20,0 dioptriemi. Model SIPY: 10% propustnost při 374 nm pro NOČ s +20,0 dioptriemi. Viz graf na **obr. 8**, osa X = vlnová délka (nm) a osa Y = % propustnost.
Typ optiky	Asférická bezaberační
Dioptrická síla	-10,0 až +40,0 dioptrií
Rozměry	Průměr těla: 6,0 mm; celkový průměr: 10,5 mm až 11 mm v dioptrickém rozmezí; haptický úhel: 0˚
Orientace čočky	Přední strana čočky směřuje nahoru směrem k přední straně oka. Jak je znázorněno na obr. 7, pokud jsou orientační prvky vpravo nahoře (A) a vlevo dole (B), čočka k vám směřuje přední stranou.

INDIKACE:

Zadněkomorová čočka Synthesis je indikována pro primární implantaci pro vizuální korekci afakie u dospělých pacientů. Čočka je určena pro implantaci do čočkového pouzdra.

KONTRAINDIKACE A VAROVÁNÍ:

Lékaři zvažující implantaci čočky (mimo jiné) v kterémkoli z následujících případů musejí zvážit poměr potenciálních přínosů a rizik: recidivující těžký zánět předního nebo zadního segmentu nebo uveitida; pacienti, u nichž NOČ může ovlivnit schopnost sledovat, diagnostikovat nebo léčit onemocnění zadního segmentu; chirurgické potíže zvyšující možnost vzniku komplikací (jako je např. přetrvávající krvácení, významné poškození duhovky, nekontrolovaný přetlak nebo závažný prolaps sklivce či jeho ztráta); zdeformované oko v důsledku předchozího traumatu nebo vývojové vady, u níž není možná odpovídající podpora NOČ; okolnosti, které by vedly k poškození endotelu během implantace; pacienti, u kterých zadní pouzdro ani zonula nejsou dostatečně celistvé, aby mohly poskytovat oporu; podezření na mikrobiální infekci.

Stejně jako u jakéhokoli jiného chirurgického výkonu, i zde existuje riziko. Potenciální komplikace operace katarakty mohou mimo jiné zahrnovat: zánět (iridocyklitidu, zánět pupilární membrány, zánět sklivce, CME, TASS ...), poškození endoteliálních buněk rohovky, endoftalmitidu, odchlípení sítnice, edém rohovky, pupilární blok, prolaps duhovky, hypopyon, glaukom, prosakování rány, hyfému, atrofii duhovky, prolaps sklivce, decentraci nebo naklonění NOČ, adhezi silikonu NOČ, optická depozita nebo opacity NOČ a sekundární chirurgický zákrok (jako je například oprava prosakování rány, odsátí sklivce, iridektomie, repozice nebo výměna NOČ a oprava odchlípení sítnice).

NOČ musí být implantována v souladu s dále uvedeným návodem k použití. Nesprávné použití může představovat riziko pro zdraví pacienta.

Výrobek nepoužívejte, pokud se má za to, že byla narušena jeho sterilita nebo kvalita v důsledku poškození obalu nebo známek průsaku.

Neprovádějte změny ani úpravy tohoto zdravotnického prostředku ani žádné z jeho částí.

Nepoužívejte čočku po uplynutí data exspirace.

Nepoužívejte čočku ani zaváděcí systém opakovaně. Opakované použití může představovat závažné riziko pro zdraví pacienta.

Neprovádějte opakovanou sterilizaci, neboť by mohla vést ke vzniku nežádoucích účinků.

BEZPEČNOSTNÍ OPATŘENÍ:

- Uchovávejte při pokojové teplotě. Nevystavujte teplotám nižším než 5 ˚C a vyšším než 45 ˚C. Nezmrazujte.
- Před otevřením ochranného obalu a individuálního sterilního pouzdra je nutné zkontrolovat model NOČ, dioptrickou sílu a datum exspirace NOČ.
- Používejte kompatibilní injektor.
- Sterilita NOČ a částí injektoru je zaručena, pouze pokud individuální sterilní pouzdra nebyla otevřena ani poškozena.
- NOČ je nutné před implantací důkladně opláchnout. Nenamáčejte a neoplachujte NOČ žádným jiným roztokem než sterilním vyváženým fyziologickým roztokem.
- Po implantaci do čočkového pouzdra je z předního a zadního povrchu čočky nutné odstranit veškerý viskoelastický materiál.
- Pokud se provádí zadní kapsulotomie YAG laserem, ujistěte se, že je laserový paprsek zaměřený nepatrně za zadní pouzdro.

BALENÍ/STERILIZACE:

NOČ Synthesis vložená v zavaděči je balena jednotlivě v pouzdru a nádobce obsahující vyvážený fyziologický roztok, které by měly být otevřeny za sterilních podmínek. NOČ Synthesis je vložena do zaváděcí komůrky, upevněna držákem čočky, a to vše je ponořeno do vyváženého fyziologického roztoku. V krabičce je dodána karta pacienta a samolepicí štítky, které zajišťují dosledovatelnost NOČ. NOČ Synthesis vložená v zavaděči je sterilizována párou.

NÁVOD K POUŽITÍ:

1. Lékař musí před zákrokem stanovit sílu čočky, která bude implantována, pomocí výpočtu. Doporučené konstanty A uvedené na krabičce čočky slouží pouze jako vodítko.
2. Před implantací zkontrolujte na obalu čočky model, sílu a správnou konfiguraci.
3. Otevřete krabičku a vyjměte z ní sterilizované pouzdro obsahující nádobku s čočkou. Postupně rozloupněte pouzdro a uvolněte tak nádobku do sterilního pole. Nádobku zkontrolujte. Ujistěte se, že není poškozená a uzávěr není rozlomený. Podržte nádobku v jedné ruce. Uchopte slupovací ouško krycí folie, sloupněte folii směrem od sebe a obnažte tak zaváděcí komůrku. Nádobku při tom držte ve vodorovné poloze
   Postup vložení zaváděcí komůrky do kompatibilního injektoru naleznete na přiložených obrázcích.
4. Vyjměte zaváděcí komůrku obsahující čočku z nádobky s čočkou zatažením za horní očko držáku čočky. V tento okamžik nevyjímejte držák čočky.
5. Zaváděcí komůrku obsahující čočku důkladně opláchněte sterilním vyváženým fyziologickým roztokem a vyhněte se kontaktu s rukavicemi. Čočky se nedotýkejte.
6. Před vložením zaváděcí komůrky do injektoru zkontrolujte, zda je píst ve vytažené poloze. Vložte zaváděcí komůrku obsahující čočku do otvoru v těle kompatibilního injektoru tak, aby dosedla na místo (obr. 1).
7. Opláchněte čočku sterilním vyváženým fyziologickým roztokem plnícím otvorem, držte injektor nakloněný, abyste umožnili průtok sterilního vyváženého fyziologického roztoku ke špičce injektoru (obr. 2).
8. Dávejte pozor, abyste se nedotkli NOČ, a aplikujte viskoelastický přípravek plnicím otvorem držáku čočky směrem ke špičce cartridge (obr. 3) a k zadnímu konci plnicí komůrky (obr. 4). Ujistěte se, že viskoelastický přípravek naplnil špičku injektoru a přesunul se do poloviny pod čočku.
9. Stiskněte píst, dokud se silikonový polštářek nedotkne držáku čočky.
10. Vyjměte držák čočky ze zaváděcí komůrky tak, že uchopíte očko držáku dvěma prsty, odklopíte dolní díl držáku čočky palcem, a zvednete jej přímo nahoru (obr. 5).
11. Zkontrolujte, zda je čočka umístěna ve středu zaváděcí komůrky a zavřete křídélka zaváděcí komůrky (obr. 6). Když je „pojistný" mechanismus zablokován, je čočka bezpečně na svém místě. Systém je připraven k injekční aplikaci.
    Podrobný popis naleznete v návodu k použití dodaném s kompatibilním injektorem.
12. Zasunutím pístu dopředu zasuňte čočku. Implantujte čočku tak, aby úkos špičky injektoru směřoval dolů k oku pacienta. Přední strana čočky směřuje k rohovce, když jsou orientační prvky nahoře vpravo (A) a dole vlevo (B) (obr. 7).
    Používejte pouze viskoelastický roztok s nízkou až střední viskozitou.
    Používejte pouze injekční systém dodaný s předplněnými čočkami Synthesis.
    Existují různé chirurgické postupy, které je možné použít, a chirurg by měl vybrat postup, který je pro pacienta vhodný.

SYMBOLY POUŽITÉ NA ŠTÍTKU:

Symbol	Popis
D	Dioptrie
ØB	Průměr těla
ØT	Celkový průměr

Synthesis Preloaded

ΠΡΟΦΟΡΤΩΜΕΝΟΣ ΑΣΦΑΙΡΙΚΟΣ ΦΑΚΟΣ ΧΩΡΙΣ ΕΚΤΡΟΠΕΣ

Μοντέλα SIP και SIPY (κίτρινο)

(ΕΛ) ΕΝΔΟΦΘΑΛΜΙΟΣ ΦΑΚΟΣ

ΠΕΡΙΓΡΑΦΗ:

Ο ενδοφθάλμιος φακός Synthesis είναι ένας ενδοφθάλμιος φακός οπίσθιου θαλάμου, ενός τεμαχίου, ο οποίος απορροφά την υπεριώδη ακτινοβολία (UV) και έχει κατασκευαστεί για την αντικατάσταση του φυσικού κρυσταλλοειδούς φακού σε ενήλικους ασθενείς με ψευδοφακία. Ο ενδοφθάλμιος φακός Synthesis περιλαμβάνει ασφαιρικά οπτικά μέρη που έχουν σχεδιαστεί χωρίς σφαιρική εκτροπή. Ο προφορτωμένος ενδοφθάλμιος φακός Synthesis παρέχεται με σύστημα τοποθέτησης Accuject Pro που καθιστά δυνατή την εφαρμογή μιας μεθόδου άσηπτης, ελεγχόμενης και ανέπαφης τοποθέτησης του φακού μέσα στο περιφάκιο. Ο προφορτωμένος ενδοφθάλμιος φακός Synthesis παρέχεται σε 2 διαφορετικά μοντέλα - Μοντέλα SIP ή SIPY. Ανατρέξτε στην ετικέτα πάνω στο χάρτινο κουτί για τον τύπο του φακού.

ΦΥΣΙΚΑ ΧΑΡΑΚΤΗΡΙΣΤΙΚΑ:

Φακός / Απτικό υλικό	Μοντέλο SIP: Αναδιπλούμενο υδρόφιλο ακρυλικό συμπολυμερές που περιέχει φίλτρο απορρόφησης της ακτινοβολίας UV. Μοντέλο SIPY: Αναδιπλούμενο υδρόφιλο ακρυλικό συμπολυμερές που περιέχει φίλτρο απορρόφησης της ακτινοβολίας UV και χρωμοφόρο απορρόφησης μπλε φωτός.
Χαρακτηριστικά υλικού	Δείκτης διάθλασης όταν βρέχεται στους 20˚C: 1,460 Δείκτης διάθλασης όταν βρίσκεται στον οφθαλμό στους 35˚C: 1,459
Φασματική εκπομπή	Μοντέλο SIP: 10% εκπομπή στα 365 νανόμετρα για ενδοφθάλμιο φακό +20,0 διοπτριών. Μοντέλο SIPY: 10% εκπομπή στα 374 νανόμετρα για ενδοφθάλμιο φακό +20,0 διοπτριών. Ανατρέξτε στην **ΕΙΚ.8** με τιμή X γραφήματος = Μήκος κύματος (nm) και τιμή Y = % εκπομπή
Τύπος οπτικού σχεδιασμού	Ασφαιρικός χωρίς εκτροπή
Ισχύς	-10,0 έως +40,0 διοπτρίες
Διαστάσεις	Διάμετρος σώματος: 6,0 mm, Συνολική διάμετρος: 10,5 mm έως 11 mm στο εύρος τιμών διοπτρίας, Απτική γωνία: 0˚
Προσανατολι-σμός φακού	Η πρόσθια πλευρά του φακού είναι στραμμένη προς τα επάνω και προς το πρόσθιο μέρος του οφθαλμού. Όπως απεικονίζεται στην ΕΙΚ.7, όταν τα χαρακτηριστικά προσανατολισμού βρίσκονται επάνω δεξιά (A) και κάτω αριστερά (B), είστε στραμμένοι προς την πρόσθια πλευρά του φακού.

ΕΝΔΕΙΞΕΙΣ:

Ο φακός οπίσθιου θαλάμου Synthesis ενδείκνυται για πρωτογενή εμφύτευση με σκοπό την οπτική διόρθωση της αφακίας σε ενήλικους ασθενείς. Ο φακός έχει σχεδιαστεί για εμφύτευση στο περιφάκιο.

ΑΝΤΕΝΔΕΙΞΕΙΣ ΚΑΙ ΠΡΟΕΙΔΟΠΟΙΗΣΕΙΣ:

Οι γιατροί που εξετάζουν το ενδεχόμενο εμφύτευσης φακού σε οποιαδήποτε από τις περιπτώσεις που αναφέρονται (ενδεικτικά) παρακάτω, θα πρέπει να σταθμίζουν το προσδοκώμενο όφελος έναντι του ενδεχόμενου κινδύνου: υποτροπιάζουσα οξεία φλεγμονή του πρόσθιου ή οπίσθιου τμήματος ή ραγοειδίτιδα, ασθενείς στους οποίους ο ενδοφθάλμιος φακός ενδέχεται να επηρεάσει την ικανότητα παρατήρησης, διάγνωσης ή αντιμετώπισης ασθενειών του οπίσθιου τμήματος, χειρουργικές δυσκολίες που ενισχύουν το ενδεχόμενο επιπλοκών (όπως ενδεικτικά είναι: εμμένουσα αιμορραγία, σημαντική βλάβη της ίριδας, ανεξέλεγκτη θετική πίεση ή σημαντική πρόπτωση ή απώλεια του υαλοειδούς σώματος), παραμορφωμένος οφθαλμός λόγω προηγούμενου τραύματος ή ελλείμματος κατά την ανάπτυξη, στον οποίο δεν είναι δυνατή η ενδεδειγμένη στήριξη του ενδοφθάλμιου φακού, συνθήκες που θα μπορούσαν να οδηγήσουν σε βλάβη του ενδοθηλίου στη διάρκεια της εμφύτευσης, ασθενείς στους οποίους ούτε το οπίσθιο περιφάκιο ούτε η ζίννειος ζώνη έχουν επαρκή ακεραιότητα ώστε να παρέχουν στήριξη, υποψία μικροβιακής λοίμωξης.

Όπως ισχύει με κάθε χειρουργική επέμβαση, υπάρχει το ενδεχόμενο κινδύνου. Πιθανές επιπλοκές της χειρουργικής επέμβασης καταρράκτη ενδέχεται να περιλαμβάνουν ενδεικτικά τα εξής: φλεγμονή (ιριδοκυκλίτιδα, μεμβράνη της κόρης, φλεγμονή του υαλοειδούς, CME, TASS ...), βλάβη του ενδοθηλίου του κερατοειδούς, ενδοφθαλμίτιδα, αποκόλληση αμφιβληστροειδούς, οίδημα του κερατοειδούς, αποκλεισμός της κόρης, πρόπτωση της ίριδας, υποπύον, γλαύκωμα, διαφυγή από τραύμα, ύφαιμα, ατροφία της ίριδας, πρόπτωση του υαλοειδούς σώματος, μετακίνηση από το κέντρο ή λοξή μετατόπιση του ενδοφθάλμιου φακού, προσκόλληση σιλικόνης στον ενδοφθάλμιο φακό, εναποθέσεις ή θόλωση των οπτικών μερών του ενδοφθάλμιου φακού και δευτερογενής χειρουργική παρέμβαση (όπως ενδεικτικά είναι η αποκατάσταση διαφυγής από τραύμα, αναρρόφηση του υαλοειδούς, ιριδεκτομή, επανατοποθέτηση ή αντικατάσταση του ενδοφθάλμιου φακού και αποκατάσταση της αποκόλλησης του αμφιβληστροειδούς).

Ο ενδοφθάλμιος φακός πρέπει να εμφυτεύεται σύμφωνα με τις παρακάτω οδηγίες χρήσης. Η ακατάλληλη χρήση μπορεί να εγκυμονεί κίνδυνο για την υγεία του ασθενούς.

Μη χρησιμοποιείτε το προϊόν, εάν η στειρότητα ή η ποιότητά του κριθεί υποβαθμισμένη λόγω ζημιάς στη συσκευασία ή λόγω ενδείξεων διαρροής.

Μην επιχειρήσετε να τροποποιήσετε ή να αλλάξετε το προϊόν ή οποιοδήποτε από τα εξαρτήματά του.

Μη χρησιμοποιείτε τον φακό μετά την ημερομηνία λήξης.

Μην επαναχρησιμοποιείτε τον φακό και το προφορτωμένο σύστημα. Η επαναχρησιμοποίηση μπορεί να εγκυμονεί σοβαρό κίνδυνο για την υγεία του ασθενούς.

Μην το επαναποστειρώνετε καθώς αυτό μπορεί να οδηγήσει σε ανεπιθύμητες παρενέργειες.

ΠΡΟΦΥΛΑΞΕΙΣ:

- Να αποθηκεύεται σε θερμοκρασία δωματίου. Αποφύγετε θερμοκρασίες κάτω από 5˚C και πάνω από 45˚C. Μην το καταψύχετε.
- Το μοντέλο, η ισχύς και η ημερομηνία λήξης του ενδοφθάλμιου φακού θα πρέπει να επαληθεύονται πριν ανοίξετε την προστατευτική συσκευασία καθώς και πριν ανοίξετε το μεμονωμένο αποστειρωμένο σακουλάκι.
- Χρησιμοποιήστε κατάλληλο συμβατό ενθετήρα.
- Η στειρότητα του ενδοφθάλμιου φακού και των εξαρτημάτων του ενθετήρα είναι εγγυημένη μόνο εάν τα μεμονωμένα αποστειρωμένα σακουλάκια δεν έχουν ανοιχτεί ή υποστεί ζημιά.
- Πρέπει να γίνεται προσεκτική έκπλυση των ενδοφθάλμιων φακών πριν από την εμφύτευση. Μην εμβυθίζετε ή ξεπλένετε τον ενδοφθάλμιο φακό με οποιοδήποτε άλλο διάλυμα εκτός από το αποστειρωμένο ισόρροπο αλατούχο διάλυμα.
- Μετά την εμφύτευση στο περιφάκιο θα πρέπει να απομακρύνεται προσεκτικά όλο το ιξωδοελαστικό διάλυμα από την πρόσθια και οπίσθια επιφάνεια του φακού.
- Εάν πραγματοποιηθεί καψουλοτομή οπίσθιου περιφακίου με YAG laser, βεβαιωθείτε ότι η δέσμη ακτίνων laser εστιάζει ελαφρώς πίσω από το οπίσθιο περιφάκιο.

ΣΥΣΚΕΥΑΣΙΑ / ΑΠΟΣΤΕΙΡΩΣΗ:

Ο προφορτωμένος ενδοφθάλμιος φακός Synthesis είναι συσκευασμένος σε μεμονωμένο σακουλάκι και σε φιαλίδιο που περιέχει ισόρροπο αλατούχο διάλυμα και πρέπει να ανοιχτεί υπό άσηπτες συνθήκες. Ο ενδοφθάλμιος φακός Synthesis είναι τοποθετημένος σε θάλαμο φόρτωσης και σταθεροποιείται σε στήριγμα φακού. Ολόκληρο το σύστημα είναι βυθισμένο στο ισόρροπο αλατούχο διάλυμα. Μια κάρτα ασθενούς και αυτοκόλλητες ετικέτες παρέχονται σε χάρτινο κουτί με σκοπό την ιχνηλασιμότητα του ενδοφθάλμιου φακού. Ο προφορτωμένος φακός Synthesis έχει αποστειρωθεί με ατμό.

ΟΔΗΓΙΕΣ ΧΡΗΣΗΣ:

1. Ο γιατρός θα πρέπει να προσδιορίζει προεγχειρητικά την ισχύ του φακού που πρόκειται να εμφυτευθεί εφαρμόζοντας μεθόδους υπολογισμού. Οι συνιστώμενες σταθερές A που αναγράφονται στο κουτί του φακού αποτελούν μόνο κατευθυντήριες οδηγίες.
2. Πριν από την εμφύτευση, ελέγξτε τη συσκευασία του φακού για να δείτε το μοντέλο, την ισχύ και την κατάλληλη διαμόρφωση.
3. Ανοίξτε το κουτί και βγάλτε το αποστειρωμένο σακουλάκι που περιέχει το φιαλίδιο με τον φακό. Ξεκολλήστε αργά το σακουλάκι για να βγάλετε το φιαλίδιο μέσα στο αποστειρωμένο πεδίο. Ελέγξτε το φιαλίδιο. Βεβαιωθείτε ότι δεν έχει φθορές και ότι η σφράγιση δεν έχει σπάσει. Κρατήστε το φιαλίδιο με το ένα χέρι. Πιάστε την προεξοχή του καλύμματος αλουμινίου και ξεκολλήστε το κάλυμμα αλουμινίου ενώ κρατάτε το φιαλίδιο σε οριζόντια θέση ώστε να εμφανιστεί ο θάλαμος φόρτωσης.
   Για να δείτε πώς θα τοποθετήσετε τον θάλαμο φόρτωσης στον συμβατό ενθετήρα, ανατρέξτε στις συνοδευτικές εικόνες.
4. Βγάλτε τον θάλαμο φόρτωσης που περιέχει τον φακό από το φιαλίδιο φακού κρατώντας το άνω κλιπ του στηρίγματος φακού και τραβώντας προς τα επάνω. Μην αφαιρέσετε το στήριγμα φακού σε αυτό το στάδιο.
5. Ξεπλύνετε σχολαστικά τον θάλαμο φόρτωσης που περιέχει τον φακό με αποστειρωμένο ισόρροπο αλατούχο διάλυμα, αποφεύγοντας την επαφή με τα γάντια. Μην αγγίξετε τον φακό.
6. Πριν από την εισαγωγή του θαλάμου φόρτωσης στον ενθετήρα, βεβαιωθείτε ότι το έμβολο είναι τραβηγμένο προς τα πίσω. Εισαγάγετε τον θάλαμο φόρτωσης που περιέχει τον φακό μέσα στο άνοιγμα του σώματος του συμβατού ενθετήρα έως ότου κλειδώσει στη θέση του (ΕΙΚ. 1).
7. Ξεπλύνετε τον φακό με αποστειρωμένο ισόρροπο αλατούχο διάλυμα μέσα από το πίσω μέρος του θαλάμου φόρτωσης, κρατώντας τον ενθετήρα με κλίση ώστε να είναι εφικτή η ροή του αποστειρωμένου ισόρροπου αλατούχου διαλύματος από το άκρο του ενθετήρα (ΕΙΚ. 2).
8. Φροντίζοντας να μην αγγίξετε τον ενδοφθάλμιο φακό, ρίξτε ιξωδοελαστικό μέσα από την οπή πλήρωσης του στηρίγματος φακού με κατεύθυνση προς το άκρο του φυσιγγίου (ΕΙΚ. 3) καθώς και στο πίσω μέρος του θαλάμου φόρτωσης (ΕΙΚ. 4). Βεβαιωθείτε ότι το ιξωδοελαστικό γεμίζει το άκρο του ενθετήρα και ότι μετακινείται λίγο κάτω από τον φακό.
9. Σπρώξτε το έμβολο προς τα εμπρός έως ότου το ένθετο σιλικόνης αγγίξει το στήριγμα του φακού.
10. Αφαιρέστε το στήριγμα του φακού από τον θάλαμο φόρτωσης πιάνοντας το κλιπ του στηρίγματος με τα δύο δάχτυλα και γυρίζοντας προς τα επάνω το κάτω πτερύγιο του στηρίγματος φακού με τον αντίχειρα και ανασηκώνοντάς το ευθεία προς τα επάνω (ΕΙΚ. 5).
11. Ελέγξτε εάν ο φακός βρίσκεται στο κέντρο του θαλάμου φόρτωσης και κλείστε τα πτερύγια του θαλάμου φόρτωσης (ΕΙΚ. 6).
    Όταν ο μηχανισμός ασφάλισης δεσμευτεί με ένα κλικ, ο φακός θα βρίσκεται με ασφάλεια στη θέση του. Το σύστημα είναι έτοιμο για ένθεση.
    Για αναλυτικές περιγραφές, ανατρέξτε στις οδηγίες χρήσης που παρέχονται με τον συμβατό ενθετήρα.
12. Πιέστε το έμβολο του ενθετήρα προς τα εμπρός για να σπρώξετε τον φακό. Εμφυτεύστε τον φακό με τη γωνία του άκρου του ενθετήρα στραμμένη προς τα κάτω και με κατεύθυνση προς τον οφθαλμό του ασθενούς. Η πρόσθια πλευρά του φακού είναι στραμμένη προς τα επάνω και προς τον κερατοειδή όταν τα χαρακτηριστικά προσανατολισμού βρίσκονται επάνω δεξιά (A) και κάτω αριστερά (B) (ΕΙΚ. 7).
    Πρέπει να χρησιμοποιείται μόνο ιξωδοελαστικό διάλυμα χαμηλού έως μέτριου ιξώδους.
    Θα πρέπει να χρησιμοποιείται μόνο το σύστημα ένθεσης που παρέχεται με τον προφορτωμένο φακό Synthesis.
    Υπάρχουν ποικίλες χειρουργικές διαδικασίες που μπορούν να εφαρμοστούν και ο χειρουργός θα πρέπει να επιλέξει μια διαδικασία που θα είναι κατάλληλη για τον ασθενή.

ΣΥΜΒΟΛΑ ΠΟΥ ΧΡΗΣΙΜΟΠΟΙΟΥΝΤΑΙ ΣΤΙΣ ΕΤΙΚΕΤΕΣ:

Σύμβολο	Περιγραφή
D	Διοπτρία
ØB	Διάμετρος σώματος
ØT	Συνολική διάμετρος

Synthesis Preloaded

LENTE ASFÉRICA ISENTA DE ABERRAÇÃO

Modelos SIP e SIPY (amarelo)

(PT) LENTE INTRAOCULAR

DESCRIÇÃO:

A lente intraocular Synthesis (LIO) é uma LIO singular de câmara posterior, com proteção UV e desenvolvida para substituir o cristalino natural em pacientes adultos pseudofáquicos. A LIO Synthesis com ótica asférica foi concebida para ser isenta de aberração esférica. A lente intraocular pré-carregada Synthesis é fornecida com um Sistema ProDelivery da Accujet para proporcionar um método estéril, controlado e sem toque de colocação da lente no saco ocular. A LIO Pré-Carregada Synthesis é disponibilizada em 2 modelos diferentes: modelos SIP ou SIPY. Consulte a etiqueta na caixa de cartão para saber qual o tipo de lente inclusa.

CARACTERÍSTICAS FÍSICAS:

Lente / Material háptico	Modelo SIP: Copolímero acrílico hidrófilo dobrável com absorção de raios UV. Modelo SIPY: Copolímero acrílico hidrófilo dobrável com absorção de raios UV e um cromóforo de filtragem de luz azul.
Características do material	Índice de refração em líquido a 20 ºC: 1.460 Índice de refração no olho a 35 ºC: 1.459
Transmissão espectral	Modelo SIP: Transmissão de 10% a 365 nanómetros para LIO de +20.0 dioptrias. Modelo SIPY: Transmissão de 10% a 374 nanómetros para LIO de +20.0 dioptrias. Consulte a tabela na FIG.8, sendo o valor de X = Comprimento de onda (nm) e o valor de Y = % de transmissão
Tipo ótico	Isento de aberração asférica
Potências	De -10.0 a +40.0 dioptrias
Dimensões	Diâmetro do corpo: 6,0 mm; Diâmetro total: 10,5 mm a 11 mm na faixa de dioptria; Ângulo háptico: 0˚
Orientação da lente	O lado anterior da lente está virado para o lado anterior do olho. Conforme ilustrado na FIG. 7, quando os elementos de orientação se encontram no canto superior direito (A) e inferior esquerdo (B), está a olhar para o lado anterior da lente.

INDICAÇÕES:

A implantação da lente Synthesis de câmara posterior está indicada essencialmente para correção visual de afaquia em pacientes adultos. A lente destina-se a ser implantada na bolsa capsular.

CONTRAINDICAÇÕES E AVISOS:

Os profissionais de saúde que considerem a implantação de lentes em algumas das seguintes circunstâncias (mas não se limitando às mesmas), devem ponderar o rácio de possíveis riscos/benefícios: uveíte ou inflamação grave recorrente do segmento anterior ou posterior; pacientes nos quais a LIO poderá vir a afetar a capacidade de observar, diagnosticar ou tratar doenças do segmento posterior; dificuldades cirúrgicas que aumentem o potencial de ocorrência de complicações (tais como, mas não se limitando a: sangramento persistente, danos significativos na íris, pressão positiva descontrolada ou perda ou prolapso vítreo significativo); olho distorcido devido a trauma anterior ou defeito do desenvolvimento que impossibilite o suporte adequado da LIO; pacientes nos quais nem a cápsula posterior nem a zónula estejam suficientemente intactas para dar apoio; suspeita de infeção microbiana.

Tal como em qualquer procedimento cirúrgico, existe risco. As possíveis complicações da cirurgia às cataratas poderão incluir, mas não se limitam a: inflamação (iridociclite, membrana pupilar, inflamação do vítreo, CME, TASS, etc.), dano endotelial na córnea, endoftalmite, descolamento da retina, edema da córnea, bloqueio pupilar, prolapso da íris, hipópio, glaucoma, ferida exsudativa, hifema, atrofia da íris, prolapso do vítreo, descentramento ou inclinação da LIO, aderência do silicone da LIO, opacidades ou depósitos óticos da LIO, e intervenções cirúrgicas secundárias (tais como, mas não se limitando à reparação de feridas exsudativas, aspiração do vítreo, iridectomia, reposicionamento ou substituição e reparação de deslocamento da retina).

A LIO deve ser implantada em conformidade com as seguintes instruções de utilização. O uso inadequado poderá dar origem a riscos para a saúde do paciente.

Não usar se houver dúvidas quanto à esterilidade ou qualidade do produto devido a danos na embalagem ou sinais de vazamento.

Não tente modificar nem alterar o dispositivo nem nenhum dos seus componentes.

Não usar a lente após a expiração da validade.

Não reutilize a lente e o sistema pré-carregado. A reutilização poderá dar origem a riscos graves para a saúde do paciente.

Não reesterilizar, visto poder causar efeitos secundários indesejáveis.

PRECAUÇÕES:

- Guardar à temperatura ambiente. Evitar temperaturas inferiores a 5 ºC e superiores a 45 ºC. Não congelar.
- As informações de modelo, potência e data de validade da LIO devem ser verificadas antes de se abrir a embalagem protetora e a bolsa estéril individual.
- Use um injetor correto compatível
- A esterilidade da LIO e das peças do injetor é garantida apenas se as bolsas estéreis individuais não tiverem sido abertas nem danificadas.
- A LIO deve ser lavada com cuidado antes da implantação. Não submergir nem lavar a LIO com qualquer outra solução que não a solução salina estéril equilibrada.
- Deve ter-se cuidado ao remover todo o viscoelástico das superfícies anterior e posterior da lente após a implantação no saco capsular.
- Se for executada uma capsulotomia YAG Laser posterior, garantir que o raio laser está focado ligeiramente atrás da cápsula posterior.

EMBALAGEM / ESTERILIZAÇÃO:

A LIO Pré-Carregada Synthesis está embalada individualmente numa bolsa e num blister que contém uma solução salina equilibrada e que deve ser aberto em condições estéreis. A LIO Synthesis é colocada numa câmara de carregamento, fixa por um suporte de lente, todos mergulhados em SSE. A embalagem inclui um cartão de paciente e etiquetas autoadesivas que permitem fazer o rastreamento da LIO. A LIO Pré-Carregada Synthesis é esterilizada a vapor.

INSTRUÇÕES DE UTILIZAÇÃO:

1. O profissional de saúde deverá determinar antes da operação a potência da lente a ser implantada utilizando métodos de cálculo. As constantes-A indicadas na embalagem da lente devem servir apenas como linhas de orientação.
2. Antes da implantação, examine o pacote da lente quanto ao modelo, potência e configuração adequada.
3. Abra a embalagem e retire a bolsa esterilizada que contém o blister da lente. Abra a bolsa com cuidado para libertar o blister para o campo estéril. Inspecione o blister. Certifique-se de que não está danificado e que o selo não está partido. Segure o frasco numa mão. Agarre a patilha de abertura da tampa metálica e puxe-a, afastando-a de si, ao mesmo tempo que segura o blister numa posição horizontal para expor a câmara de carregamento.
   Consulte as figuras anexas para colocar a câmara de carregamento no injetor compatível.
4. Remova a câmara que contém a lente do frasco da lente puxando a argola superior do suporte da lente. Não remova o suporte da lente neste momento.
5. Lave bem a câmara de carregamento que contém a lente com uma solução salina equilibrada estéril, evitando o contacto com as luvas. Não toque na lente.
6. Antes de inserir a câmara de carregamento no injetor, assegure-se de que o êmbolo está na posição recolhida. Insira a câmara de carregamento contendo a lente na abertura do corpo do injetor compatível até este parecer estar em posição (FIG. 1).
7. Lave a lente com uma solução salina equilibrada estéril através da parte posterior da câmara de carregamento, inclinando o injetor, a fim de permitir a entrada do fluxo da solução salina equilibrada estéril pela ponta do injetor (FIG. 2).
8. Com cuidado para não tocar na LIO, aplique viscoelástico através do orifício de enchimento em direção à ponta do cartucho (FIG. 3) e no final da câmara de carregamento (FIG. 4). Assegure-se de que o viscoelástico enche a ponta do injetor e migra até metade do percurso até à lente.
9. Empurre o êmbolo para a frente até a almofada de silicone se aproximar do suporte da lente.
10. Remova o suporte da lente da câmara de carregamento segurando na argola do suporte com dois dedos e virando para cima a dobradiça inferior do suporte da lente com o polegar e levantando diretamente para cima (FIG. 5).
11. Verifique se a lente está posicionada centralmente na câmara de carregamento e feche as asas da câmara de carregamento (FIG. 6). Quando o mecanismo "click-lock" prender, a lente está segura no local. O sistema está pronto para injeção.
    Para descrições detalhadas, consultar as instruções de utilização fornecidas com o injetor compatível.
12. Pressione o êmbolo do injetor para a frente para empurrar a lente. Implante a lente com o bisel da ponta do injetor voltado para baixo, para o olho do doente. O lado anterior da lente está voltado para cima virado para a córnea quando aa características de orientação forem superior direita (A) e inferior esquerda (B) (FIG. 7).
    Apenas deve ser utilizada uma solução viscoelástica de baixa a média viscosidade.
    Apenas deve ser utilizado o sistema de injeção fornecido com a lente pré-carregada Synthesis.
    Existem diversos procedimentos cirúrgicos que podem ser utilizados, e o cirurgião deve selecionar o procedimento adequado para o paciente.

SÍMBOLOS USADOS NA ETIQUETAGEM:

Símbolo	Descrição
D	Dioptria
ØB	Diâmetro do corpo
ØT	Diâmetro total

Synthesis Preloaded

عدسة شبه كروية خالية من الزيغ ومحملة مسبقاً

الطرازين SIP وSIPY (أصفرا اللون)

(AR) عدسات باطن العين

الوصف:

عدسة Synthesis التي تزرع داخل العين (IOL) عبارة عن عدسة مكونة من قطعة واحدة ممتصة للأشعة فوق البنفسجية (UV) تتم زراعتها داخل الغرفة الخلفية للعين وقد تم تصميمها لتحل محل العدسة البلورية الطبيعية عند البالغين من مرضى البسودوفاكيا. تحتوي عدسة Synthesis IOL على أجهزة إبصار شبه كروية بما يضمن خلوها من الزيغ الكروي. تتوافر عدسة Synthesis IOL المحملة مسبقاً مزودة بجهاز التوصيل Accuject Pro لتضمن طريقة معقمة خاضعة للسيطرة وخالية من اللمس عند توصيل العدسة في حقيبة العين. وتتوافر عدسة Synthesis IOL في طرازين مختلفين - SIP أو SIPY. انظر الملصق على العلبة الكرتونية لمعرفة نوع العدسة.

الخصائص الفيزيائية:

العدسة/مادة المثبت	طراز SIP: قابلة للثني مسترطبة ومصنوعة من الإكريليك والبوليمر المشترك وتحتوي على مادة ماصة للأشعة فوق البنفسجية. طراز SIPY: قابلة للثني مسترطبة ومصنوعة من الإكريليك والبوليمر المشترك وتحتوي على مادة ماصة للأشعة فوق البنفسجية وحامل لون لترشيح الضوء الأزرق.
الخصائص المادية	معامل الانكسار عندما تكون رطبة عند ٢٠ درجة مئوية: ١,٤٦٠ معامل الانكسار عندما تكون داخل العين عند ٣٥ درجة مئوية: ١,٤٥٩
معامل الإنفاذ الطيفي	طراز SIP: معامل إنفاذ ١٠٪ عند ٣٦٥ نانومتر بالنسبة للعدسة IOL ذات قوة انكسار +٢٠,٠ ديوبتر. طراز SIPY: معامل إنفاذ ١٠٪ عند ٣٧٤ نانومتر بالنسبة للعدسة IOL ذات قوة انكسار +٢٠,٠ ديوبتر. انظر **الشكل** ٨ حيث قيمة X = طول الموجة (بالنانومتر) وقيمة Y = النسبة المئوية لمعامل الإنفاذ
نوع العدسة البصرية	شبه خالية من الزيغ
القوة	-١٠,٠ إلى +٤٠,٠ ديوبتر
الأبعاد	قطر الهيكل: ٦,٠ مم؛ القطر الكلي: ١٠,٥ مم إلى ١١ مم عبر نطاق الديوبتر؛ زاوية المثبت: ٠ درجة
توجيه العدسة	يكون الجانب الأمامي للعدسة موجهًا لأعلى نحو الجانب الأمامي من العين. كما هو موضح في الشكل ٧، عندما تكون علامتا توجيه العدسة نحو اليمين في الأعلى (A) واليسار في الأسفل (B)، فإنك تكون مواجهًا للجانب الأمامي من العدسة.

دواعي الاستعمال:

تُستعمل عدسة الغرفة الخلفية Synthesis ويتم زرعها بشكل أساسي للتصحيح البصري لانعدام العدسة عند المرضى البالغين. العدسة مصممة خصيصًا ليتم زرعها داخل الكيس المحفظي.

موانع الاستعمال والتحذيرات:

يجب على الأطباء الذين يريدون زراعة العدسة في أي من الحالات التالية (على سبيل المثال لا الحصر) قياس معدل المخاطر/الفوائد المحتمل: الالتهاب أو التهاب العنبية الشديد المتكرر في الجزء الأمامي أو الخلفي من العين؛ والمرضى الذين ستؤثر فيهم عدسة IOL على إمكانية ملاحظة أو تشخيص أو معالجة أمراض الجزء الخلفي من العين؛ والصعوبات الجراحية التي تزيد من احتمالات حدوث مضاعفات (بما في ذلك، على سبيل المثال لا الحصر: النزيف المستمر، والضرر الكبير بقزحية العين، والضغط الإيجابي غير المنضبط، والهبوط أو التلف المؤثر في الزجاجية)؛ وتشوه العين نتيجة لجرح سابق أو عيب نمائي لا يمكن معه دعم عدسة IOL بشكل سليم؛ والحالات التي قد ينتج عنها تلف للبطانة أثناء زرع العدسة؛ والمرضى الذين لا تكون فيهم المحفظة أو النطيقة الخلفية سليمة بشكل كافٍ لدعم العدسة؛ واحتمال وقوع عدوى ميكروبية.

ومثلما هو الحال في أي إجراء جراحي آخر، ثمة مخاطر محتملة. تتضمن المضاعفات المحتملة لجراحة إعتام عدسة العين، على سبيل المثال لا الحصر، ما يلي: الالتهاب (التهاب القزحية، وغشاء الحدقة، والتهاب الزجاجية، وذمة البقعة الكيسية (CME)، ومتلازمة سمية الجزء الأمامي (TASS) وغيرها)، وتلف بطانة القرنية، وذمة القرنية، والإحصار الحدقي، وبروز القزحية، والغمير القيحي، والجلوكوما، وتسرب الجرح، والتحدمية، وضمور القزحية، وهبوط الزجاجية، وانحراف IOL عن مركزها أو ميلها، والتصاق السيليكون بعدسة IOL، والرواسب البصرية أو حالات العتامة، والتدخل الجراحي الثانوي (بما في ذلك، على سبيل المثال لا الحصر، معالجة تسرب الجرح، وشفط الزجاجية، وقطع القزحية، وإعادة موضعة IOL أو استبدالها وإصلاح انفصال الشبكية).

يجب زرع عدسة IOL وفقًا لتعليمات الاستخدام التالية. قد يسبب الاستخدام الخاطئ لها خطورة على صحة المريض.

لا تستخدم المنتج إذا كنت تعتقد حدوث خلل في التعقيم أو الجودة بسبب تلف العبوة أو وجود علامات تسرب.

لا تحاول تعديل أو تغيير الجهاز أو أي من مكوناته.

يُحظر استخدام العدسة بعد انتهاء صلاحيتها.

يحظر إعادة استخدام العدسة والجهاز المحمل مسبقاً. قد تتسبب إعادة الاستخدام في خطورة كبيرة على صحة المريض.

يُحظر إعادة تعقيم العدسة فقد ينتج عن ذلك آثار جانبية غير مرغوب فيها.

الاحتياطات:

- يُحفظ المنتج في درجة حرارة الغرفة. تجنب تعريض المنتج لدرجة حرارة أقل من ٥ درجة مئوية وأكثر من ٤٥ درجة مئوية. يُحظر تجميده.
- ينبغي التحقق من طراز عدسة IOL وقوة انعكاسها وتاريخ صلاحيتها قبل فتح الغلاف الواقي وكذلك قبل فتح العبوة المعقمة الفردية.
- استخدم محقنة صحيحة متوافقة.
- يكون تعقيم عدسة IOL وإجزاء المحقنة مضموناً ما لم تكن العبوات المعقمة الفردية مفتوحة أو تالفة.
- يجب غسل عدسة IOL قبل زرعها في العين. يُحظر نقع عدسة IOL أو غسلها بأي محلول سوى المحلول الملحي المتوازن المعقم.
- ينبغي الحرص على إزالة جميع المحاليل اللزجة من على السطح الأمامي والخلفي للعدسة بعد زرعها داخل الكيس المحفظي.
- إذا كنت تقوم ببضع المحفظة الخلفية بالياج ليزر (YAG)، فتأكد من أن شعاع الليزر مركز قليلاً خلف المحفظة الخلفية.

التعبئة/التعقيم:

تتم تعبئة عدسة Synthesis IOL المحملة مسبقاً بشكل مستقل في كيس وقارورة تحتوي على محلول ملحي متوازن وينبغي مراعاة شروط التعقيم عند فتحها. يتم وضع عدسة Synthesis IOL في غرفة تحميل مع تثبيتها بحامل العدسة وغمرها تماماً في محلول ملحي متوازن. تتضمن العلبة الكرتونية بطاقة مريض وملصقات لتسجيل أي بيانات تتعلق بعدسة IOL من أجل تسهيل تتبعها. عدسة Synthesis IOL المحملة مسبقاً معقمة بالبخار.

طريقة الاستعمال:

١. يجب على الطبيب أن يحدد قبل الجراحة قوة انكسار العدسة التي سيتم زرعها باستخدام الطرق الحسابية. ثوابت A الموصى بها والمدونة على العلبة الكرتونية للعدسة ما هي إلا قيم استرشادية فقط.

٢. قبل زرع العدسة، افحص العبوة للتأكد من طراز العدسة وقوتها وتكوينها المناسب.

٣. افتح العلبة الكرتونية وأخرج الكيس المعقم الذي يحتوي على قارورة العدسة. قم بتقشير الكيس بالتدريج لإخراج القارورة داخل المجال المعقم. افحص القارورة. تأكد أنها ليست تالفة وأن الختم لم يتم نزعه. أمسك القارورة بيد واحدة. انزع لسان سحب الغطاء الرقيق وقم بتقشير الغطاء بعيداً عنك مع الإمساك بالقارورة في وضع أفقي لإظهار غرفة التحميل. يُرجى الرجوع إلى الأشكال المرفقة للمساعدة في وضع غرفة التحميل في المحقنة المتوافقة.

٤. قم بإزالة غرفة التحميل التي تحتوي على العدسة من قارورة العدسة بالسحب لأعلى عند العروة العلوية لحامل العدسة. لا تقم بإزالة حامل العدسة في هذا الوقت.

٥. اغسل غرفة التحميل التي تحتوي على العدسة جيدًا بمحلول ملحي متوازن معقم، مع تجنب ملامسة القفازات لها. لا تلمس العدسة.

٦. قبل إدخال غرفة التحميل في المحقنة تأكد من أن المكبس في وضع السحب. أدخل غرفة التحميل التي تحتوي على العدسة في فتحة جسم المحقنة المتوافقة حتى تستقر في مكانها (الشكل ١).

٧. اغسل العدسة بمحلول ملحي متوازن معقم من خلال الجزء الخلفي من غرفة التحميل، مع إمساك المحقنة مائلة للسماح بتدفق المحلول الملحي المعقم المتوازن عبر طرف المحقنة (الشكل ٢).

٨. مع توخي الحذر لعدم لمس العدسة، قم بوضع المواد اللزجة من خلال فتحة الملء الموجودة في حامل العدسة في اتجاه طرف الخرطوشة (الشكل ٣) وفي نهاية غرفة التحميل (الشكل ٤). تأكد من أن المحاليل اللزجة تملأ طرف المحقنة وتتحرك في المنتصف أسفل العدسة.

٩. ادفع المكبس للأمام حتى تصل وسادة السيليكون إلى حامل العدسة.

١٠. قم بإزالة حامل العدسة من غرفة التحميل عن طريق مسك عروة الحامل بإصبعين ومن خلال نقر الرزة السفلى لحامل العدسة بإصبع الإبهام والرفع لأعلى بشكل مستقيم (الشكل ٥).

١١. تحقق من أن العدسة موضوعة بشكل مركزي في غرفة التحميل وقريبة من جناحي غرفة التحميل (الشكل ٦). عند تفعيل آلية "النقر-القفل"، تكون العدسة قد استقرت في موضعها على نحو صحيح. وعندئذ يكون الجهاز جاهزاً لإجراء الحقن.
وللحصول على أوصاف مفصلة، يُرجى الرجوع إلى تعليمات الاستخدام المتوفرة مع المحقنة المتوافقة.

١٢. اضغط على مكبس المحقنة للأمام لدفع العدسة. قم بزرع العدسة بحيث تكون الحافة المائلة لطرف المحقنة موجهة لأسفل نحو عين المريض. ويكون الجانب الأمامي من العدسة موجهاً لأعلى نحو القرنية عندما تكون علامتا توجيه العدسة في أعلى اليمين (A) وأسفل اليسار (B) (الشكل ٧).
يجب ألا يُستخدم مع هذه العدسات سوى المحاليل اللزجة التي تتراوح درجة لزوجتها من منخفضة إلى متوسطة.
يجب فقط استخدام نظام الحقن المُزود بعدسة Synthesis المُحملة مُسبقًا.
توجد أساليب جراحية عديدة يمكن استخدامها وينبغي للجراح اختيار الجراحة التي تتناسب مع حالة المريض.

الرموز المستخدمة على الملصق:

الرمز	الوصف
D	ديوبتر
ØB	قطر الهيكل
ØT	القطر الكلي

Cutting Edge S.A.S.
770 rue Alfred Nobel
Immeuble Le Nobel
34000 Montpellier
FRANCE

CE 0197

(EN) DO NOT USE IF PACKAGE IS DAMAGED (FR) NE PAS UTILISER SI L'EMBALLAGE EST ENDOMMAGÉ (DE) BEI BESCHÄDIGTER VERPACKUNG NICHT VERWENDEN (ES) NO UTILIZAR SI EL PAQUETE ESTÁ DAÑADO (IT) NON USARE SE LA CONFEZIONE È DANNEGGIATA (PL) NIE UŻYWAĆ, JEŚLI OPAKOWANIE JEST USZKODZONE (RU) НЕ ИСПОЛЬЗОВАТЬ ПРИ ЕСЛИ УПАКОВКА ПОВРЕЖДЕНА (KO) 포장이 손상되었으면 사용하지 마십시오 MEGSÉRÜLT (VN) KHÔNG SỬ DỤNG NẾU BAO BÌ BỊ HƯ HẠI (ΕΛ) ΝΑ ΜΗ ΧΡΗΣΙΜΟΠΟΙΕΙΤΑΙ ΕΑΝ Η ΣΥΣΚΕΥΑΣΙΑ ΕΧΕΙ ΥΠΟΣΤΕΙ ΒΛΑΒΗ (PT) NÃO USAR SE A EMBALAGEM ESTIVER DANIFICADA (AR) يُحظر الاستخدام إذا كانت العبوة تالفة

(EN) DO NOT RESTERILIZE (FR) NE PAS RESTÉRILISER (DE) NICHT ERNEUT STERILISIEREN (ES) NO REESTERILIZAR (IT) NON RISTERILIZZARE (PL) NIE STERYLIZOWAĆ PONOWNIE (RU) НЕ СТЕРИЛИЗОВАТЬ ПОВТОРНО (KO) 재멸균하지 마십시오 (VN) KHÔNG KHỬ TRÙNG LẠI (ΕΛ) ΜΗΝ ΤΟ ΕΠΑΝΑΠΟΣΤΕΙΡΩΝΕΤΕ (PT) NÃO VOLTAR A ESTERILIZAR (AR) تُحظر إعادة التعقيم

(EN) DO NOT REUSE (FR) NE PAS RÉUTILISER (DE) NICHT WIEDERVERWENDEN (ES) NO REUTILIZAR (IT) NON RIUTILIZZARE (PL) NIE UŻYWAĆ PONOWNIE (RU) НЕ ИСПОЛЬЗОВАТЬ ПОВТОРНО (KO) 재사용하지 마십시오 (VN) KHÔNG TÁI SỬ DỤNG (ΕΛ) ΜΗΝ ΤΟ ΕΠΑΝΑΧΡΗΣΙΜΟΠΟΙΕΙΤΕ (PT) NÃO REUTILIZAR (AR) تُحظر إعادة الاستخدام

Aspec-1577003 (2020-09-28)

TÜVRheinland®

Certificate

The Certification Body of
TÜV Rheinland LGA Products GmbH

hereby certifies that the organization

Cutting Edge SAS
770, Rue Alfred Nobel, Immeuble le Nobel
34000 Montpellier
France

has established and applies a quality management system for medical devices for the following scope:

Design and development, manufacture and distribution of acrylic intraocular lenses and distribution of intraocular lenses and ophthalmic surgical devices.
(see attachment for additional sites included)

Proof has been furnished that the requirements specified in

EN ISO 13485:2016

are fulfilled. The quality management system is subject to yearly surveillance.

Effective Date:	2020-02-04
Certificate Registration No.:	SX 60146578 0001
An audit was performed. Report No.:	21250656 019
This Certificate is valid until:	2022-12-07

Certification Body

DAkkS
Deutsche
Akkreditierungsstelle
D-ZM-14169-01-02

Date 2020-02-04

Roland Gruber

TÜV Rheinland LGA Products GmbH
TÜVRheinland®
Zertifizierungsstelle

TÜV Rheinland LGA Products GmbH - Tillystraße 2 - 90431 Nürnberg
Tel.: +49 221 806-1371 Fax: +49 221 806-3935 e-mail:cert-validity@de.tuv.com http://www.tuv.com/safety

10/020 h 04.06 ® TÜV, TUEV and TÜV are registered trademarks. Utilisation and application requires prior approval.

TÜVRheinland®

Doc. 1/1, Rev. 0

TÜV Rheinland
LGA Products GmbH
Tillystraße 2, 90431 Nürnberg

Attachment to Certificate
Registration No.: SX 60146578 0001
Report No.: 21250656 019

Organization:
Cutting Edge SAS
770, Rue Alfred Nobel, Immeuble le Nobel
34000 Montpellier
France

Scope:

Sites included:

Cutting Edge Manufacturing SAS
580 rue Max Planck
31670 Labège, France

Activities: Design and development and manufacture of acrylic intraocular lenses

Cutting Edge Manufacturing SAS
4099 La Lauragaise
31670 Labège, France

Activities: Distribution of intraocular lenses and ophthalmic surgical devices

Certification Body

DAkkS
Deutsche Akkreditierungsstelle
D-ZM-14169-01-02

Date: 2020-02-04

Roland Gruber

TÜV Rheinland LGA Products GmbH
TÜVRheinland®
Zertifizierungsstelle

10/020 n 04.08 TÜV, TÜEV and TÜV are registered trademarks. Utilisation and application requires prior approval

EC Certificate

Directive 93/42/EEC Annex II, excluding Section 4
Full Quality Assurance System
Medical Devices

Registration No.: HD 60148953 0001

Report No.: 21250656 021

Manufacturer:
Cutting Edge SAS
770, Rue Alfred Nobel, Immeuble le Nobel
34000 Montpellier
France

Products:
Intraocular lenses

(see attachment for additional sites included)

Replaces Certificate, Registration No.: HD 60116293 0001

Expiry Date: 2024-05-26

The Notified Body hereby declares that the requirements of Annex II, excluding section 4 of the directive 93/42/EEC have been met for the listed products. The above named manufacturer has established and applies a quality assurance system, which is subject to periodic surveillance, defined by Annex II, section 5 of the aforementioned directive. For placing on the market of class III devices covered by this certificate an EC design-examination certificate according to Annex II, section 4 is required.

Effective Date: 2020-04-24

Date: 2020-04-24

Notified Body

Dipl.-Ing. I. Munkler

TÜV Rheinland LGA Products GmbH - Zertifizierungsstelle

TÜV Rheinland LGA Products GmbH - Tillystraße 2 - 90431 Nürnberg
TÜV Rheinland LGA Products GmbH is a Notified Body according to Directive 93/42/EEC concerning medical devices with the identification number 0197.

10/020 h 04.08 ® TÜV, TUEV and TUV are registered trademarks. Utilisation and application requires prior approval.

Doc. 1/1, Rev. 0

TÜV Rheinland
LGA Products GmbH
Tillystraße 2, 90431 Nürnberg

Attachment to Certificate
Registration No.: HD 60148953 0001
Report No.: 21250656 021

Manufacturer: Cutting Edge SAS
770, Rue Alfred Nobel, Immeuble le Nobel
34000 Montpellier
France

Sites included:

Cutting Edge Manufacturing SAS
580 rue Max Planck
31670 Labège
France

Cutting Edge Manufacturing SAS
4099 La Lauragaise
31670 Labège
France

Notified Body

TÜV Rheinland LGA Products GmbH
TÜVRheinland
Zertifizierungsstelle

Date: 2020-04-24

Dipl.-Ing. I. Munkler

10/020 h 04.08 ® TÜV, TUEV and TUV are registered trademarks. Utilisation and application requires prior approval.

CUTTING EDGE
sense of innovation

EC DECLARATION OF CONFORMITY ACCORDING TO DIRECTIVE 93/42/EEC

This declaration is issued under the sole responsibility of Cutting Edge S.A.S. as manufacturer of the mentioned products.

DEVICES CATEGORY	Posterior-chamber intraocular lenses, pseudophakic
GMDN CODE	35658
PRODUCTS	Synthesis models: SISA, SISAY, SIP, SIPY
CLASS	IIb, Rule 8, according to Directive 93/42/EEC Annex IX
MANUFACTURER	Cutting Edge S.A.S. Immeuble Le Nobel 770 rue Alfred Nobel 34000 Montpellier France

Above products are developed and manufactured in compliance with Council Directive 93/42/EEC of 14 June 1993 concerning Medical Devices as amended by Directive 2007/47/EC of the European Parliament and of the Council of 5 September 2007 and the applicable European harmonized standards.

NOTIFIED BODY	TÜV Rheinland LGA Products GmbH Tillystraße 2 90431 Nürnberg Germany
	Notified Body number: 0197
QUALITY SYSTEM CERTIFICATE	EN ISO 13485:2016 "Design and development, manufacture and distribution of acrylic intraocular lenses and distribution of intraocular lenses and ophthalmic surgical devices." Number: SX 60146578 0001 Expires on : 2022-12-07
EC CERTIFICATE	Number: HD 60148953 0001 Expires on: 2024-05-26
DECLARATION REVISION INDEX	F

We hereby declare the conformity of the above mentioned products with the Council Directive 93/42/EEC of 14 June 1993 concerning Medical Devices as amended by Directive 2007/47/EC of the European Parliament and of the Council of 5 September 2007, Annex II "Full quality assurance system", excluding section 4.

This Declaration of Conformity expires on: 2022-12-07

Date and Signature 02 JUIL. 2020

Sandrine BONACHE
Quality and Regulatory Affairs Manager - Cutting Edge S.A.S

CUTTING EDGE
770, Rue Alfred Nobel - Immeuble le Nobel - 34 000 MONTPELLIER • +33 (0)4 67 71 92 44 • cutting-edge.fr

SAS au capital de 286 309 euros • RCS 800783284 Montpellier • N° SIRET : 800 783 284 00022 • N° TVA INTRACOM : FR43 800 783 284

CUTTING EDGE
sense of innovation

CUTTING EDGE SYNTHESIS MODEL "SISA"		
REF	**DECRIPTION**	**GTIN**
SISA+00.00D	Synthesis Hydrophilic Stand Alone +00.00D	03760259140007
SISA+01.00D	Synthesis Hydrophilic Stand Alone +01.00D	03760259140014
SISA+02.00D	Synthesis Hydrophilic Stand Alone +02.00D	03760259140021
SISA+03.00D	Synthesis Hydrophilic Stand Alone +03.00D	03760259140038
SISA+04.00D	Synthesis Hydrophilic Stand Alone +04.00D	03760259140045
SISA+05.00D	Synthesis Hydrophilic Stand Alone +05.00D	03760259140052
SISA+06.00D	Synthesis Hydrophilic Stand Alone +06.00D	03760259140069
SISA+07.00D	Synthesis Hydrophilic Stand Alone +07.00D	03760259140076
SISA+08.00D	Synthesis Hydrophilic Stand Alone +08.00D	03760259140083
SISA+09.00D	Synthesis Hydrophilic Stand Alone +09.00D	03760259140090
SISA+10.00D	Synthesis Hydrophilic Stand Alone +10.00D	03760259140106
SISA+10.50D	Synthesis Hydrophilic Stand Alone +10.50D	03760259140113
SISA+11.00D	Synthesis Hydrophilic Stand Alone +11.00D	03760259140120
SISA+11.50D	Synthesis Hydrophilic Stand Alone +11.50D	03760259140137
SISA+12.00D	Synthesis Hydrophilic Stand Alone +12.00D	03760259140144
SISA+12.50D	Synthesis Hydrophilic Stand Alone +12.50D	03760259140151
SISA+13.00D	Synthesis Hydrophilic Stand Alone +13.00D	03760259140168
SISA+13.50D	Synthesis Hydrophilic Stand Alone +13.50D	03760259140175
SISA+14.00D	Synthesis Hydrophilic Stand Alone +14.00D	03760259140182
SISA+14.50D	Synthesis Hydrophilic Stand Alone +14.50D	03760259140199
SISA+15.00D	Synthesis Hydrophilic Stand Alone +15.00D	03760259140205
SISA+15.50D	Synthesis Hydrophilic Stand Alone +15.50D	03760259140212
SISA+16.00D	Synthesis Hydrophilic Stand Alone +16.00D	03760259140229
SISA+16.50D	Synthesis Hydrophilic Stand Alone +16.50D	03760259140236
SISA+17.00D	Synthesis Hydrophilic Stand Alone +17.00D	03760259140243
SISA+17.50D	Synthesis Hydrophilic Stand Alone +17.50D	03760259140250
SISA+18.00D	Synthesis Hydrophilic Stand Alone +18.00D	03760259140267
SISA+18.50D	Synthesis Hydrophilic Stand Alone +18.50D	03760259140274
SISA+19.00D	Synthesis Hydrophilic Stand Alone +19.00D	03760259140281
SISA+19.50D	Synthesis Hydrophilic Stand Alone +19.50D	03760259140298
SISA+20.00D	Synthesis Hydrophilic Stand Alone +20.00D	03760259140304
SISA+20.50D	Synthesis Hydrophilic Stand Alone +20.50D	03760259140311
SISA+21.00D	Synthesis Hydrophilic Stand Alone +21.00D	03760259140328
SISA+21.50D	Synthesis Hydrophilic Stand Alone +21.50D	03760259140335
SISA+22.00D	Synthesis Hydrophilic Stand Alone +22.00D	03760259140342
SISA+22.50D	Synthesis Hydrophilic Stand Alone +22.50D	03760259140359
SISA+23.00D	Synthesis Hydrophilic Stand Alone +23.00D	03760259140366
SISA+23.50D	Synthesis Hydrophilic Stand Alone +23.50D	03760259140373
SISA+24.00D	Synthesis Hydrophilic Stand Alone +24.00D	03760259140380
SISA+24.50D	Synthesis Hydrophilic Stand Alone +24.50D	03760259140397
SISA+25.00D	Synthesis Hydrophilic Stand Alone +25.00D	03760259140403

CUTTING EDGE
770, Rue Alfred Nobel - Immeuble le Nobel - 34 000 MONTPELLIER • +33 (0)4 67 71 92 44 • cutting-edge.fr

SAS au capital de 286 309 euros • RCS 800783284 Montpellier • N° SIRET : 800 783 284 00022 • N° TVA INTRACOM : FR43 800 783 284

CUTTING EDGE
sense of innovation

CUTTING EDGE SYNTHESIS MODEL "SISA"		
REF	**DECRIPTION**	**GTIN**
SISA+25.50D	Synthesis Hydrophilic Stand Alone +25.50D	03760259140410
SISA+26.00D	Synthesis Hydrophilic Stand Alone +26.00D	03760259140427
SISA+26.50D	Synthesis Hydrophilic Stand Alone +26.50D	03760259140434
SISA+27.00D	Synthesis Hydrophilic Stand Alone +27.00D	03760259140441
SISA+27.50D	Synthesis Hydrophilic Stand Alone +27.50D	03760259140458
SISA+28.00D	Synthesis Hydrophilic Stand Alone +28.00D	03760259140465
SISA+28.50D	Synthesis Hydrophilic Stand Alone +28.50D	03760259140472
SISA+29.00D	Synthesis Hydrophilic Stand Alone +29.00D	03760259140489
SISA+29.50D	Synthesis Hydrophilic Stand Alone +29.50D	03760259140496
SISA+30.00D	Synthesis Hydrophilic Stand Alone +30.00D	03760259140502

CUTTING EDGE SYNTHESIS MODEL "SISAY"		
REF	**DECRIPTION**	**GTIN**
SISAY+00.00D	Synthesis Hydrophilic Stand Alone Yellow +00.00D	03760259140519
SISAY+01.00D	Synthesis Hydrophilic Stand Alone Yellow +01.00D	03760259140526
SISAY+02.00D	Synthesis Hydrophilic Stand Alone Yellow +02.00D	03760259140533
SISAY+03.00D	Synthesis Hydrophilic Stand Alone Yellow +03.00D	03760259140540
SISAY+04.00D	Synthesis Hydrophilic Stand Alone Yellow +04.00D	03760259140557
SISAY+05.00D	Synthesis Hydrophilic Stand Alone Yellow +05.00D	03760259140564
SISAY+06.00D	Synthesis Hydrophilic Stand Alone Yellow +06.00D	03760259140571
SISAY+07.00D	Synthesis Hydrophilic Stand Alone Yellow +07.00D	03760259140588
SISAY+08.00D	Synthesis Hydrophilic Stand Alone Yellow +08.00D	03760259140595
SISAY+09.00D	Synthesis Hydrophilic Stand Alone Yellow +09.00D	03760259140601
SISAY+10.00D	Synthesis Hydrophilic Stand Alone Yellow +10.00D	03760259140618
SISAY+10.50D	Synthesis Hydrophilic Stand Alone Yellow +10.50D	03760259140625
SISAY+11.00D	Synthesis Hydrophilic Stand Alone Yellow +11.00D	03760259140632
SISAY+11.50D	Synthesis Hydrophilic Stand Alone Yellow +11.50D	03760259140649
SISAY+12.00D	Synthesis Hydrophilic Stand Alone Yellow +12.00D	03760259140656
SISAY+12.50D	Synthesis Hydrophilic Stand Alone Yellow +12.50D	03760259140663
SISAY+13.00D	Synthesis Hydrophilic Stand Alone Yellow +13.00D	03760259140670
SISAY+13.50D	Synthesis Hydrophilic Stand Alone Yellow +13.50D	03760259140687
SISAY+14.00D	Synthesis Hydrophilic Stand Alone Yellow +14.00D	03760259140694
SISAY+14.50D	Synthesis Hydrophilic Stand Alone Yellow +14.50D	03760259140700
SISAY+15.00D	Synthesis Hydrophilic Stand Alone Yellow +15.00D	03760259140717
SISAY+15.50D	Synthesis Hydrophilic Stand Alone Yellow +15.50D	03760259140724
SISAY+16.00D	Synthesis Hydrophilic Stand Alone Yellow +16.00D	03760259140731
SISAY+16.50D	Synthesis Hydrophilic Stand Alone Yellow +16.50D	03760259140748
SISAY+17.00D	Synthesis Hydrophilic Stand Alone Yellow +17.00D	03760259140755
SISAY+17.50D	Synthesis Hydrophilic Stand Alone Yellow +17.50D	03760259140762
SISAY+18.00D	Synthesis Hydrophilic Stand Alone Yellow +18.00D	03760259140779
SISAY+18.50D	Synthesis Hydrophilic Stand Alone Yellow +18.50D	03760259140786

CUTTING EDGE
770, Rue Alfred Nobel - Immeuble le Nobel - 34 000 MONTPELLIER • +33 (0)4 67 71 92 44 • cutting-edge.fr
SAS au capital de 286 309 euros • RCS 800783284 Montpellier • N° SIRET : 800 783 284 00022 • N° TVA INTRACOM : FR43 800 783 284

CUTTING EDGE
sense of innovation

CUTTING EDGE SYNTHESIS MODEL "SISAY"		
REF	**DECRIPTION**	**GTIN**
SISAY+19.00D	Synthesis Hydrophilic Stand Alone Yellow +19.00D	03760259140793
SISAY+19.50D	Synthesis Hydrophilic Stand Alone Yellow +19.50D	03760259140809
SISAY+20.00D	Synthesis Hydrophilic Stand Alone Yellow +20.00D	03760259140816
SISAY+20.50D	Synthesis Hydrophilic Stand Alone Yellow +20.50D	03760259140823
SISAY+21.00D	Synthesis Hydrophilic Stand Alone Yellow +21.00D	03760259140830
SISAY+21.50D	Synthesis Hydrophilic Stand Alone Yellow +21.50D	03760259140847
SISAY+22.00D	Synthesis Hydrophilic Stand Alone Yellow +22.00D	03760259140854
SISAY+22.50D	Synthesis Hydrophilic Stand Alone Yellow +22.50D	03760259140861
SISAY+23.00D	Synthesis Hydrophilic Stand Alone Yellow +23.00D	03760259140878
SISAY+23.50D	Synthesis Hydrophilic Stand Alone Yellow +23.50D	03760259140885
SISAY+24.00D	Synthesis Hydrophilic Stand Alone Yellow +24.00D	03760259140892
SISAY+24.50D	Synthesis Hydrophilic Stand Alone Yellow +24.50D	03760259140908
SISAY+25.00D	Synthesis Hydrophilic Stand Alone Yellow +25.00D	03760259140915
SISAY+25.50D	Synthesis Hydrophilic Stand Alone Yellow +25.50D	03760259140922
SISAY+26.00D	Synthesis Hydrophilic Stand Alone Yellow +26.00D	03760259140939
SISAY+26.50D	Synthesis Hydrophilic Stand Alone Yellow +26.50D	03760259140946
SISAY+27.00D	Synthesis Hydrophilic Stand Alone Yellow +27.00D	03760259140953
SISAY+27.50D	Synthesis Hydrophilic Stand Alone Yellow +27.50D	03760259140960
SISAY+28.00D	Synthesis Hydrophilic Stand Alone Yellow +28.00D	03760259140977
SISAY+28.50D	Synthesis Hydrophilic Stand Alone Yellow +28.50D	03760259140984
SISAY+29.00D	Synthesis Hydrophilic Stand Alone Yellow +29.00D	03760259140991
SISAY+29.50D	Synthesis Hydrophilic Stand Alone Yellow +29.50D	03760259141004
SISAY+30.00D	Synthesis Hydrophilic Stand Alone Yellow +30.00D	03760259141011

CUTTING EDGE SYNTHESIS MODEL "SIP"		
REF	**DECRIPTION**	**GTIN**
SIP-10.00D	Synthesis Hydrophilic Preloaded -10.00D	03760259148140
SIP-09.00D	Synthesis Hydrophilic Preloaded -09.00D	03760259148157
SIP-08.00D	Synthesis Hydrophilic Preloaded -08.00D	03760259148164
SIP-07.00D	Synthesis Hydrophilic Preloaded -07.00D	03760259148171
SIP-06.00D	Synthesis Hydrophilic Preloaded -06.00D	03760259148188
SIP-05.00D	Synthesis Hydrophilic Preloaded -05.00D	03760259148195
SIP-04.00D	Synthesis Hydrophilic Preloaded -04.00D	03760259148201
SIP-03.00D	Synthesis Hydrophilic Preloaded -03.00D	03760259148218
SIP-02.00D	Synthesis Hydrophilic Preloaded -02.00D	03760259148225
SIP-01.00D	Synthesis Hydrophilic Preloaded -01.00D	03760259148232
SIP+00.00D	Synthesis Hydrophilic Preloaded +00.00D	03760259141028
SIP+01.00D	Synthesis Hydrophilic Preloaded+01.00D	03760259141035
SIP+02.00D	Synthesis Hydrophilic Preloaded+02.00D	03760259141042
SIP+03.00D	Synthesis Hydrophilic Preloaded+03.00D	03760259141059
SIP+04.00D	Synthesis Hydrophilic Preloaded+04.00D	03760259141066

CUTTING EDGE
770, Rue Alfred Nobel - Immeuble le Nobel - 34 000 MONTPELLIER • +33 (0)4 67 71 92 44 • cutting-edge.fr
SAS au capital de 286 309 euros • RCS 800783284 Montpellier • N° SIRET : 800 783 284 00022 • N° TVA INTRACOM : FR43 800 783 284

CUTTING EDGE
sense of innovation

CUTTING EDGE SYNTHESIS MODEL "SIP"		
REF	**DECRIPTION**	**GTIN**
SIP+05.00D	Synthesis Hydrophilic Preloaded+05.00D	03760259141073
SIP+06.00D	Synthesis Hydrophilic Preloaded+06.00D	03760259141080
SIP+07.00D	Synthesis Hydrophilic Preloaded+07.00D	03760259141097
SIP+08.00D	Synthesis Hydrophilic Preloaded+08.00D	03760259141103
SIP+09.00D	Synthesis Hydrophilic Preloaded+09.00D	03760259141110
SIP+10.00D	Synthesis Hydrophilic Preloaded+10.00D	03760259141127
SIP+10.50D	Synthesis Hydrophilic Preloaded+10.50D	03760259141134
SIP+11.00D	Synthesis Hydrophilic Preloaded+11.00D	03760259141141
SIP+11.50D	Synthesis Hydrophilic Preloaded+11.50D	03760259141158
SIP+12.00D	Synthesis Hydrophilic Preloaded+12.00D	03760259141165
SIP+12.50D	Synthesis Hydrophilic Preloaded+12.50D	03760259141172
SIP+13.00D	Synthesis Hydrophilic Preloaded+13.00D	03760259141189
SIP+13.50D	Synthesis Hydrophilic Preloaded+13.50D	03760259141196
SIP+14.00D	Synthesis Hydrophilic Preloaded+14.00D	03760259141202
SIP+14.50D	Synthesis Hydrophilic Preloaded+14.50D	03760259141219
SIP+15.00D	Synthesis Hydrophilic Preloaded+15.00D	03760259141226
SIP+15.50D	Synthesis Hydrophilic Preloaded+15.50D	03760259141233
SIP+16.00D	Synthesis Hydrophilic Preloaded+16.00D	03760259141240
SIP+16.50D	Synthesis Hydrophilic Preloaded+16.50D	03760259141257
SIP+17.00D	Synthesis Hydrophilic Preloaded+17.00D	03760259141264
SIP+17.50D	Synthesis Hydrophilic Preloaded+17.50D	03760259141271
SIP+18.00D	Synthesis Hydrophilic Preloaded+18.00D	03760259141288
SIP+18.50D	Synthesis Hydrophilic Preloaded+18.50D	03760259141295
SIP+19.00D	Synthesis Hydrophilic Preloaded+19.00D	03760259141301
SIP+19.50D	Synthesis Hydrophilic Preloaded+19.50D	03760259141318
SIP+20.00D	Synthesis Hydrophilic Preloaded+20.00D	03760259141325
SIP+20.50D	Synthesis Hydrophilic Preloaded+20.50D	03760259141332
SIP+21.00D	Synthesis Hydrophilic Preloaded+21.00D	03760259141349
SIP+21.50D	Synthesis Hydrophilic Preloaded+21.50D	03760259141356
SIP+22.00D	Synthesis Hydrophilic Preloaded+22.00D	03760259141363
SIP+22.50D	Synthesis Hydrophilic Preloaded+22.50D	03760259141370
SIP+23.00D	Synthesis Hydrophilic Preloaded+23.00D	03760259141387
SIP+23.50D	Synthesis Hydrophilic Preloaded+23.50D	03760259141394
SIP+24.00D	Synthesis Hydrophilic Preloaded+24.00D	03760259141400
SIP+24.50D	Synthesis Hydrophilic Preloaded+24.50D	03760259141417
SIP+25.00D	Synthesis Hydrophilic Preloaded+25.00D	03760259141424
SIP+25.50D	Synthesis Hydrophilic Preloaded+25.50D	03760259141431
SIP+26.00D	Synthesis Hydrophilic Preloaded+26.00D	03760259141448
SIP+26.50D	Synthesis Hydrophilic Preloaded+26.50D	03760259141455
SIP+27.00D	Synthesis Hydrophilic Preloaded+27.00D	03760259141462
SIP+27.50D	Synthesis Hydrophilic Preloaded+27.50D	03760259141479

CUTTING EDGE
770, Rue Alfred Nobel - Immeuble le Nobel - 34 000 MONTPELLIER • +33 (0)4 67 71 92 44 • cutting-edge.fr
SAS au capital de 286 309 euros • RCS 800783284 Montpellier • N° SIRET : 800 783 284 00022 • N° TVA INTRACOM : FR43 800 783 284

CUTTING EDGE
sense of innovation

CUTTING EDGE SYNTHESIS MODEL "SIP"		
REF	**DECRIPTION**	**GTIN**
SIP+28.00D	Synthesis Hydrophilic Preloaded+28.00D	03760259141486
SIP+28.50D	Synthesis Hydrophilic Preloaded+28.50D	03760259141493
SIP+29.00D	Synthesis Hydrophilic Preloaded+29.00D	03760259141509
SIP+29.50D	Synthesis Hydrophilic Preloaded+29.50D	03760259141516
SIP+30.00D	Synthesis Hydrophilic Preloaded+30.00D	03760259141523
SIP+31.00D	Synthesis Hydrophilic Preloaded+31.00D	03760259148249
SIP+32.00D	Synthesis Hydrophilic Preloaded+32.00D	03760259148256
SIP+33.00D	Synthesis Hydrophilic Preloaded+33.00D	03760259148263
SIP+34.00D	Synthesis Hydrophilic Preloaded+34.00D	03760259148270
SIP+35.00D	Synthesis Hydrophilic Preloaded+35.00D	03760259148287
SIP+36.00D	Synthesis Hydrophilic Preloaded+36.00D	03760259148294
SIP+37.00D	Synthesis Hydrophilic Preloaded+37.00D	03760259148300
SIP+38.00D	Synthesis Hydrophilic Preloaded+38.00D	03760259148317
SIP+39.00D	Synthesis Hydrophilic Preloaded+39.00D	03760259148324
SIP+40.00D	Synthesis Hydrophilic Preloaded+40.00D	03760259148331

CUTTING EDGE SYNTHESIS MODEL "SIPY"		
REF	**DECRIPTION**	**GTIN**
SIPY-10.00D	Synthesis Hydrophilic Preloaded Yellow-10.00D	03760284929974
SIPY-09.00D	Synthesis Hydrophilic Preloaded Yellow-09.00D	03760284929967
SIPY-08.00D	Synthesis Hydrophilic Preloaded Yellow-08.00D	03760284929950
SIPY-07.00D	Synthesis Hydrophilic Preloaded Yellow-07.00D	03760284929943
SIPY-06.00D	Synthesis Hydrophilic Preloaded Yellow-0600D	03760284929936
SIPY-05.00D	Synthesis Hydrophilic Preloaded Yellow-05.00D	03760284929929
SIPY-04.00D	Synthesis Hydrophilic Preloaded Yellow-04.00D	03760284929912
SIPY-03.00D	Synthesis Hydrophilic Preloaded Yellow-03.00D	03760284929905
SIPY-02.00D	Synthesis Hydrophilic Preloaded Yellow-02.00D	03760284929899
SIPY-01.00D	Synthesis Hydrophilic Preloaded Yellow-01.00D	03760284929882
SIPY+00.00D	Synthesis Hydrophilic Preloaded Yellow+00.00D	03760259141530
SIPY+01.00D	Synthesis Hydrophilic Preloaded Yellow+01.00D	03760259141547
SIPY+02.00D	Synthesis Hydrophilic Preloaded Yellow+02.00D	03760259141554
SIPY+03.00D	Synthesis Hydrophilic Preloaded Yellow+03.00D	03760259141561
SIPY+04.00D	Synthesis Hydrophilic Preloaded Yellow+04.00D	03760259141578
SIPY+05.00D	Synthesis Hydrophilic Preloaded Yellow+05.00D	03760259141585
SIPY+06.00D	Synthesis Hydrophilic Preloaded Yellow+06.00D	03760259141592
SIPY+07.00D	Synthesis Hydrophilic Preloaded Yellow+07.00D	03760259141608
SIPY+08.00D	Synthesis Hydrophilic Preloaded Yellow+08.00D	03760259141615
SIPY+09.00D	Synthesis Hydrophilic Preloaded Yellow+09.00D	03760259141622
SIPY+10.00D	Synthesis Hydrophilic Preloaded Yellow+10.00D	03760259141639
SIPY+10.50D	Synthesis Hydrophilic Preloaded Yellow+10.50D	03760259141646
SIPY+11.00D	Synthesis Hydrophilic Preloaded Yellow+11.00D	03760259141653

CUTTING EDGE
770, Rue Alfred Nobel - Immeuble le Nobel - 34 000 MONTPELLIER • +33 (0)4 67 71 92 44 • cutting-edge.fr
SAS au capital de 286 309 euros • RCS 800783284 Montpellier • N° SIRET : 800 783 284 00022 • N° TVA INTRACOM : FR43 800 783 284

CUTTING EDGE
sense of innovation

CUTTING EDGE SYNTHESIS MODEL "SIPY"		
REF	**DECRIPTION**	**GTIN**
SIPY-10.00D	Synthesis Hydrophilic Preloaded Yellow-10.00D	03760284929974
SIPY-09.00D	Synthesis Hydrophilic Preloaded Yellow-09.00D	03760284929967
SIPY-08.00D	Synthesis Hydrophilic Preloaded Yellow-08.00D	03760284929950
SIPY-07.00D	Synthesis Hydrophilic Preloaded Yellow-07.00D	03760284929943
SIPY-06.00D	Synthesis Hydrophilic Preloaded Yellow-0600D	03760284929936
SIPY-05.00D	Synthesis Hydrophilic Preloaded Yellow-05.00D	03760284929929
SIPY-04.00D	Synthesis Hydrophilic Preloaded Yellow-04.00D	03760284929912
SIPY-03.00D	Synthesis Hydrophilic Preloaded Yellow-03.00D	03760284929905
SIPY-02.00D	Synthesis Hydrophilic Preloaded Yellow-02.00D	03760284929899
SIPY-01.00D	Synthesis Hydrophilic Preloaded Yellow-01.00D	03760284929882
SIPY+11.50D	Synthesis Hydrophilic Preloaded Yellow+11.50D	03760259141660
SIPY+12.00D	Synthesis Hydrophilic Preloaded Yellow+12.00D	03760259141677
SIPY+12.50D	Synthesis Hydrophilic Preloaded Yellow+12.50D	03760259141684
SIPY+13.00D	Synthesis Hydrophilic Preloaded Yellow+13.00D	03760259141691
SIPY+13.50D	Synthesis Hydrophilic Preloaded Yellow+13.50D	03760259141707
SIPY+14.00D	Synthesis Hydrophilic Preloaded Yellow+14.00D	03760259141714
SIPY+14.50D	Synthesis Hydrophilic Preloaded Yellow+14.50D	03760259141721
SIPY+15.00D	Synthesis Hydrophilic Preloaded Yellow+15.00D	03760259141738
SIPY+15.50D	Synthesis Hydrophilic Preloaded Yellow+15.50D	03760259141745
SIPY+16.00D	Synthesis Hydrophilic Preloaded Yellow+16.00D	03760259141752
SIPY+16.50D	Synthesis Hydrophilic Preloaded Yellow+16.50D	03760259141769
SIPY+17.00D	Synthesis Hydrophilic Preloaded Yellow+17.00D	03760259141776
SIPY+17.50D	Synthesis Hydrophilic Preloaded Yellow+17.50D	03760259141783
SIPY+18.00D	Synthesis Hydrophilic Preloaded Yellow+18.00D	03760259141790
SIPY+18.50D	Synthesis Hydrophilic Preloaded Yellow+18.50D	03760259141806
SIPY+19.00D	Synthesis Hydrophilic Preloaded Yellow+19.00D	03760259141813
SIPY+19.50D	Synthesis Hydrophilic Preloaded Yellow+19.50D	03760259141820
SIPY+20.00D	Synthesis Hydrophilic Preloaded Yellow+20.00D	03760259141837
SIPY+20.50D	Synthesis Hydrophilic Preloaded Yellow+20.50D	03760259141844
SIPY+21.00D	Synthesis Hydrophilic Preloaded Yellow+21.00D	03760259141851
SIPY+21.50D	Synthesis Hydrophilic Preloaded Yellow+21.50D	03760259141868
SIPY+22.00D	Synthesis Hydrophilic Preloaded Yellow+22.00D	03760259141875
SIPY+22.50D	Synthesis Hydrophilic Preloaded Yellow+22.50D	03760259141882
SIPY+23.00D	Synthesis Hydrophilic Preloaded Yellow+23.00D	03760259141899
SIPY+23.50D	Synthesis Hydrophilic Preloaded Yellow+23.50D	03760259141905
SIPY+24.00D	Synthesis Hydrophilic Preloaded Yellow+24.00D	03760259141912
SIPY+24.50D	Synthesis Hydrophilic Preloaded Yellow+24.50D	03760259141929
SIPY+25.00D	Synthesis Hydrophilic Preloaded Yellow+25.00D	03760259141936
SIPY+25.50D	Synthesis Hydrophilic Preloaded Yellow+25.50D	03760259141943
SIPY+26.00D	Synthesis Hydrophilic Preloaded Yellow+26.00D	03760259141950
SIPY+26.50D	Synthesis Hydrophilic Preloaded Yellow+26.50D	03760259141967

CUTTING EDGE
770, Rue Alfred Nobel - Immeuble le Nobel - 34 000 MONTPELLIER • +33 (0)4 67 71 92 44 • cutting-edge.fr

SAS au capital de 286 309 euros • RCS 800783284 Montpellier • N° SIRET : 800 783 284 00022 • N° TVA INTRACOM : FR43 800 783 284

CUTTING EDGE
sense of innovation

CUTTING EDGE SYNTHESIS MODEL "SIPY"		
REF	**DECRIPTION**	**GTIN**
SIPY-10.00D	Synthesis Hydrophilic Preloaded Yellow-10.00D	03760284929974
SIPY-09.00D	Synthesis Hydrophilic Preloaded Yellow-09.00D	03760284929967
SIPY-08.00D	Synthesis Hydrophilic Preloaded Yellow-08.00D	03760284929950
SIPY-07.00D	Synthesis Hydrophilic Preloaded Yellow-07.00D	03760284929943
SIPY-06.00D	Synthesis Hydrophilic Preloaded Yellow-0600D	03760284929936
SIPY-05.00D	Synthesis Hydrophilic Preloaded Yellow-05.00D	03760284929929
SIPY-04.00D	Synthesis Hydrophilic Preloaded Yellow-04.00D	03760284929912
SIPY-03.00D	Synthesis Hydrophilic Preloaded Yellow-03.00D	03760284929905
SIPY-02.00D	Synthesis Hydrophilic Preloaded Yellow-02.00D	03760284929899
SIPY-01.00D	Synthesis Hydrophilic Preloaded Yellow-01.00D	03760284929882
SIPY+27.00D	Synthesis Hydrophilic Preloaded Yellow+27.00D	03760259141974
SIPY+27.50D	Synthesis Hydrophilic Preloaded Yellow+27.50D	03760259141981
SIPY+28.00D	Synthesis Hydrophilic Preloaded Yellow+28.00D	03760259141998
SIPY+28.50D	Synthesis Hydrophilic Preloaded Yellow+28.50D	03760259142001
SIPY+29.00D	Synthesis Hydrophilic Preloaded Yellow+29.00D	03760259142018
SIPY+29.50D	Synthesis Hydrophilic Preloaded Yellow+29.50D	03760259142025
SIPY+30.00D	Synthesis Hydrophilic Preloaded Yellow+30.00D	03760259142032
SIPY+31.00D	Synthesis Hydrophilic Preloaded Yellow+31.00D	03760284929981
SIPY+32.00D	Synthesis Hydrophilic Preloaded Yellow+32.00D	03760284929998
SIPY+33.00D	Synthesis Hydrophilic Preloaded Yellow+33.00D	03665493000004
SIPY+34.00D	Synthesis Hydrophilic Preloaded Yellow+34.00D	03665493000011
SIPY+35.00D	Synthesis Hydrophilic Preloaded Yellow+35.00D	03665493000028
SIPY+36.00D	Synthesis Hydrophilic Preloaded Yellow+36.00D	03665493000035
SIPY+37.00D	Synthesis Hydrophilic Preloaded Yellow+37.00D	03665493000042
SIPY+38.00D	Synthesis Hydrophilic Preloaded Yellow+38.00D	03665493000059
SIPY+39.00D	Synthesis Hydrophilic Preloaded Yellow+39.00D	03665493000066
SIPY+40.00D	Synthesis Hydrophilic Preloaded Yellow+40.00D	03665493000073

CUTTING EDGE
770, Rue Alfred Nobel - Immeuble le Nobel - 34 000 MONTPELLIER • +33 (0)4 67 71 92 44 • cutting-edge.fr

SAS au capital de 286 309 euros • RCS 800783284 Montpellier • N° SIRET : 800 783 284 00022 • N° TVA INTRACOM : FR43 800 783 284

LISTA
dispozitivelor medicale înregistrate în Republica Moldova

Ordin de înregistrare nr.Rg04-000016 din 19.01.2022

Reprezentantul	Producatorul	Țara	Denumirea dispozitivului medical	Nr. de înreg.
IMUNOTEHNOMED S.R.L.	CUTTING EDGE S.A.S.	Franta	LENTILĂ INTRAOCULARĂ Synthesis Toric CYL+0.75 SPH+5.00 SIPT075+05.00	DM000333173
IMUNOTEHNOMED S.R.L.	CUTTING EDGE S.A.S.	Franta	LENTILĂ INTRAOCULARĂ Synthesis Toric CYL+1.00 SPH+5.00 SIPT100+05.00	DM000333174
IMUNOTEHNOMED S.R.L.	CUTTING EDGE S.A.S.	Franta	LENTILĂ INTRAOCULARĂ Synthesis Toric CYL+1.50 SPH+5.00 SIPT150+05.00	DM000333175
IMUNOTEHNOMED S.R.L.	CUTTING EDGE S.A.S.	Franta	LENTILĂ INTRAOCULARĂ Synthesis Toric CYL+2.25 SPH+5.00 SIPT225+05.00	DM000333176
IMUNOTEHNOMED S.R.L.	CUTTING EDGE S.A.S.	Franta	LENTILĂ INTRAOCULARĂ Synthesis Toric CYL+3.00 SPH+5.00 SIPT300+05.00	DM000333177
IMUNOTEHNOMED S.R.L.	CUTTING EDGE S.A.S.	Franta	LENTILĂ INTRAOCULARĂ Synthesis Toric CYL+3.75 SPH+5.00 SIPT375+05.00	DM000333178
IMUNOTEHNOMED S.R.L.	CUTTING EDGE S.A.S.	Franta	LENTILĂ INTRAOCULARĂ Synthesis Toric CYL+4.50 SPH+5.00 SIPT450+05.00	DM000333179
IMUNOTEHNOMED S.R.L.	CUTTING EDGE S.A.S.	Franta	LENTILĂ INTRAOCULARĂ Synthesis Toric CYL+5.25 SPH+5.00 SIPT525+05.00	DM000333180
IMUNOTEHNOMED S.R.L.	CUTTING EDGE S.A.S.	Franta	LENTILĂ INTRAOCULARĂ Synthesis Toric CYL+6.00 SPH+5.00 SIPT600+05.00	DM000333181
IMUNOTEHNOMED S.R.L.	CUTTING EDGE S.A.S.	Franta	LENTILĂ INTRAOCULARĂ Synthesis Toric CYL+0.75 SPH+6.00 SIPT075+06.00	DM000333182
IMUNOTEHNOMED S.R.L.	CUTTING EDGE S.A.S.	Franta	LENTILĂ INTRAOCULARĂ Synthesis Toric CYL+1.00 SPH+6.00 SIPT100+06.00	DM000333183
IMUNOTEHNOMED S.R.L.	CUTTING EDGE S.A.S.	Franta	LENTILĂ INTRAOCULARĂ Synthesis Toric CYL+1.50 SPH+6.00 SIPT150+06.00	DM000333184
IMUNOTEHNOMED S.R.L.	CUTTING EDGE S.A.S.	Franta	LENTILĂ INTRAOCULARĂ Synthesis Toric CYL+2.25 SPH+6.00 SIPT225+06.00	DM000333185
IMUNOTEHNOMED S.R.L.	CUTTING EDGE S.A.S.	Franta	LENTILĂ INTRAOCULARĂ Synthesis Toric CYL+3.00 SPH+6.00 SIPT300+06.00	DM000333186
IMUNOTEHNOMED S.R.L.	CUTTING EDGE S.A.S.	Franta	LENTILĂ INTRAOCULARĂ Synthesis Toric CYL+3.75 SPH+6.00 SIPT375+06.00	DM000333187
IMUNOTEHNOMED S.R.L.	CUTTING EDGE S.A.S.	Franta	LENTILĂ INTRAOCULARĂ Synthesis Toric CYL+4.50 SPH+6.00 SIPT450+06.00	DM000333188
IMUNOTEHNOMED S.R.L.	CUTTING EDGE S.A.S.	Franta	LENTILĂ INTRAOCULARĂ Synthesis Toric CYL+5.25 SPH+6.00 SIPT525+06.00	DM000333189
IMUNOTEHNOMED S.R.L.	CUTTING EDGE S.A.S.	Franta	LENTILĂ INTRAOCULARĂ Synthesis Toric CYL+6.00 SPH+6.00 SIPT600+06.00	DM000333190
IMUNOTEHNOMED S.R.L.	CUTTING EDGE S.A.S.	Franta	LENTILĂ INTRAOCULARĂ Synthesis Toric CYL+0.75 SPH+7.00 SIPT075+07.00	DM000333191
IMUNOTEHNOMED S.R.L.	CUTTING EDGE S.A.S.	Franta	LENTILĂ INTRAOCULARĂ Synthesis Toric CYL+1.00 SPH+7.00 SIPT100+07.00	DM000333192
IMUNOTEHNOMED S.R.L.	CUTTING EDGE S.A.S.	Franta	LENTILĂ INTRAOCULARĂ Synthesis Toric CYL+1.50 SPH+7.00 SIPT150+07.00	DM000333193
IMUNOTEHNOMED S.R.L.	CUTTING EDGE S.A.S.	Franta	LENTILĂ INTRAOCULARĂ Synthesis Toric CYL+2.25 SPH+7.00 SIPT225+07.00	DM000333194
IMUNOTEHNOMED S.R.L.	CUTTING EDGE S.A.S.	Franta	LENTILĂ INTRAOCULARĂ Synthesis Toric CYL+3.00 SPH+7.00 SIPT300+07.00	DM000333195
IMUNOTEHNOMED S.R.L.	CUTTING EDGE S.A.S.	Franta	LENTILĂ INTRAOCULARĂ Synthesis Toric CYL+3.75 SPH+7.00 SIPT375+07.00	DM000333196
IMUNOTEHNOMED S.R.L.	CUTTING EDGE S.A.S.	Franta	LENTILĂ INTRAOCULARĂ Synthesis Toric CYL+4.50 SPH+7.00 SIPT450+07.00	DM000333197
IMUNOTEHNOMED S.R.L.	CUTTING EDGE S.A.S.	Franta	LENTILĂ INTRAOCULARĂ Synthesis Toric CYL+5.25 SPH+7.00 SIPT525+07.00	DM000333198
IMUNOTEHNOMED S.R.L.	CUTTING EDGE S.A.S.	Franta	LENTILĂ INTRAOCULARĂ Synthesis Toric CYL+6.00 SPH+7.00 SIPT600+07.00	DM000333199

IMUNOTEHNOMED S.R.L.	CUTTING EDGE S.A.S.	Franta	LENTILĂ INTRAOCULARĂ Synthesis Toric CYL+0.75 SPH+8.00 SIPT075+08.00	DM000333200
IMUNOTEHNOMED S.R.L.	CUTTING EDGE S.A.S.	Franta	LENTILĂ INTRAOCULARĂ Synthesis Toric CYL+1.00 SPH+8.00 SIPT100+08.00	DM000333201
IMUNOTEHNOMED S.R.L.	CUTTING EDGE S.A.S.	Franta	LENTILĂ INTRAOCULARĂ Synthesis Toric CYL+1.50 SPH+8.00 SIPT150+08.00	DM000333202
IMUNOTEHNOMED S.R.L.	CUTTING EDGE S.A.S.	Franta	LENTILĂ INTRAOCULARĂ Synthesis Toric CYL+2.25 SPH+8.00 SIPT225+08.00	DM000333203
IMUNOTEHNOMED S.R.L.	CUTTING EDGE S.A.S.	Franta	LENTILĂ INTRAOCULARĂ Synthesis Toric CYL+3.00 SPH+8.00 SIPT300+08.00	DM000333204
IMUNOTEHNOMED S.R.L.	CUTTING EDGE S.A.S.	Franta	LENTILĂ INTRAOCULARĂ Synthesis Toric CYL+3.75 SPH+8.00 SIPT375+08.00	DM000333205
IMUNOTEHNOMED S.R.L.	CUTTING EDGE S.A.S.	Franta	LENTILĂ INTRAOCULARĂ Synthesis Toric CYL+4.50 SPH+8.00 SIPT450+08.00	DM000333206
IMUNOTEHNOMED S.R.L.	CUTTING EDGE S.A.S.	Franta	LENTILĂ INTRAOCULARĂ Synthesis Toric CYL+5.25 SPH+8.00 SIPT525+08.00	DM000333207
IMUNOTEHNOMED S.R.L.	CUTTING EDGE S.A.S.	Franta	LENTILĂ INTRAOCULARĂ Synthesis Toric CYL+6.00 SPH+8.00 SIPT600+08.00	DM000333208
IMUNOTEHNOMED S.R.L.	CUTTING EDGE S.A.S.	Franta	LENTILĂ INTRAOCULARĂ Synthesis Toric CYL+0.75 SPH+9.00 SIPT075+09.00	DM000333209
IMUNOTEHNOMED S.R.L.	CUTTING EDGE S.A.S.	Franta	LENTILĂ INTRAOCULARĂ Synthesis Toric CYL+1.00 SPH+9.00 SIPT100+09.00	DM000333210
IMUNOTEHNOMED S.R.L.	CUTTING EDGE S.A.S.	Franta	LENTILĂ INTRAOCULARĂ Synthesis Toric CYL+1.50 SPH+9.00 SIPT150+09.00	DM000333211
IMUNOTEHNOMED S.R.L.	CUTTING EDGE S.A.S.	Franta	LENTILĂ INTRAOCULARĂ Synthesis Toric CYL+2.25 SPH+9.00 SIPT225+09.00	DM000333212
IMUNOTEHNOMED S.R.L.	CUTTING EDGE S.A.S.	Franta	LENTILĂ INTRAOCULARĂ Synthesis Toric CYL+3.00 SPH+9.00 SIPT300+09.00	DM000333213
IMUNOTEHNOMED S.R.L.	CUTTING EDGE S.A.S.	Franta	LENTILĂ INTRAOCULARĂ Synthesis Toric CYL+3.75 SPH+9.00 SIPT375+09.00	DM000333214
IMUNOTEHNOMED S.R.L.	CUTTING EDGE S.A.S.	Franta	LENTILĂ INTRAOCULARĂ Synthesis Toric CYL+4.50 SPH+9.00 SIPT450+09.00	DM000333215
IMUNOTEHNOMED S.R.L.	CUTTING EDGE S.A.S.	Franta	LENTILĂ INTRAOCULARĂ Synthesis Toric CYL+5.25 SPH+9.00 SIPT525+09.00	DM000333216
IMUNOTEHNOMED S.R.L.	CUTTING EDGE S.A.S.	Franta	LENTILĂ INTRAOCULARĂ Synthesis Toric CYL+6.00 SPH+9.00 SIPT600+09.00	DM000333217
IMUNOTEHNOMED S.R.L.	CUTTING EDGE S.A.S.	Franta	LENTILĂ INTRAOCULARĂ Synthesis Toric CYL+0.75 SPH+10.00 SIPT075+10.00	DM000333218
IMUNOTEHNOMED S.R.L.	CUTTING EDGE S.A.S.	Franta	LENTILĂ INTRAOCULARĂ Synthesis Toric CYL+1.00 SPH+10.00 SIPT100+10.00	DM000333219
IMUNOTEHNOMED S.R.L.	CUTTING EDGE S.A.S.	Franta	LENTILĂ INTRAOCULARĂ Synthesis Toric CYL+1.50 SPH+10.00 SIPT150+10.00	DM000333220
IMUNOTEHNOMED S.R.L.	CUTTING EDGE S.A.S.	Franta	LENTILĂ INTRAOCULARĂ Synthesis Toric CYL+2.25 SPH+10.00 SIPT225+10.00	DM000333221
IMUNOTEHNOMED S.R.L.	CUTTING EDGE S.A.S.	Franta	LENTILĂ INTRAOCULARĂ Synthesis Toric CYL+3.00 SPH+10.00 SIPT300+10.00	DM000333222
IMUNOTEHNOMED S.R.L.	CUTTING EDGE S.A.S.	Franta	LENTILĂ INTRAOCULARĂ Synthesis Toric CYL+3.75 SPH+10.00 SIPT375+10.00	DM000333223
IMUNOTEHNOMED S.R.L.	CUTTING EDGE S.A.S.	Franta	LENTILĂ INTRAOCULARĂ Synthesis Toric CYL+4.50 SPH+10.00 SIPT450+10.00	DM000333224
IMUNOTEHNOMED S.R.L.	CUTTING EDGE S.A.S.	Franta	LENTILĂ INTRAOCULARĂ Synthesis Toric CYL+5.25 SPH+10.00 SIPT525+10.00	DM000333225
IMUNOTEHNOMED S.R.L.	CUTTING EDGE S.A.S.	Franta	LENTILĂ INTRAOCULARĂ Synthesis Toric CYL+6.00 SPH+10.00 SIPT600+10.00	DM000333226
IMUNOTEHNOMED S.R.L.	CUTTING EDGE S.A.S.	Franta	LENTILĂ INTRAOCULARĂ Synthesis Toric CYL+0.75 SPH+10.50 SIPT075+10.50	DM000333227
IMUNOTEHNOMED S.R.L.	CUTTING EDGE S.A.S.	Franta	LENTILĂ INTRAOCULARĂ Synthesis Toric CYL+1.00 SPH+10.50 SIPT100+10.50	DM000333228
IMUNOTEHNOMED S.R.L.	CUTTING EDGE S.A.S.	Franta	LENTILĂ INTRAOCULARĂ Synthesis Toric CYL+1.50 SPH+10.50 SIPT150+10.50	DM000333229
IMUNOTEHNOMED S.R.L.	CUTTING EDGE S.A.S.	Franta	LENTILĂ INTRAOCULARĂ Synthesis Toric CYL+2.25 SPH+10.50 SIPT225+10.50	DM000333230
IMUNOTEHNOMED S.R.L.	CUTTING EDGE S.A.S.	Franta	LENTILĂ INTRAOCULARĂ Synthesis Toric CYL+3.00 SPH+10.50 SIPT300+10.50	DM000333231
IMUNOTEHNOMED S.R.L.	CUTTING EDGE S.A.S.	Franta	LENTILĂ INTRAOCULARĂ Synthesis Toric CYL+3.75 SPH+10.50 SIPT375+10.50	DM000333232

IMUNOTEHNOMED S.R.L.	CUTTING EDGE S.A.S.	Franta	LENTILĂ INTRAOCULARĂ Synthesis Toric CYL+4.50 SPH+10.50 SIPT450+10.50	DM000333233
IMUNOTEHNOMED S.R.L.	CUTTING EDGE S.A.S.	Franta	LENTILĂ INTRAOCULARĂ Synthesis Toric CYL+5.25 SPH+10.50 SIPT525+10.50	DM000333234
IMUNOTEHNOMED S.R.L.	CUTTING EDGE S.A.S.	Franta	LENTILĂ INTRAOCULARĂ Synthesis Toric CYL+6.00 SPH+10.50 SIPT600+10.50	DM000333235
IMUNOTEHNOMED S.R.L.	CUTTING EDGE S.A.S.	Franta	LENTILĂ INTRAOCULARĂ Synthesis Toric CYL+0.75 SPH+11.00 SIPT075+11.00	DM000333236
IMUNOTEHNOMED S.R.L.	CUTTING EDGE S.A.S.	Franta	LENTILĂ INTRAOCULARĂ Synthesis Toric CYL+1.00 SPH+11.00 SIPT100+11.00	DM000333237
IMUNOTEHNOMED S.R.L.	CUTTING EDGE S.A.S.	Franta	LENTILĂ INTRAOCULARĂ Synthesis Toric CYL+1.50 SPH+11.00 SIPT150+11.00	DM000333238
IMUNOTEHNOMED S.R.L.	CUTTING EDGE S.A.S.	Franta	LENTILĂ INTRAOCULARĂ Synthesis Toric CYL+2.25 SPH+11.00 SIPT225+11.00	DM000333239
IMUNOTEHNOMED S.R.L.	CUTTING EDGE S.A.S.	Franta	LENTILĂ INTRAOCULARĂ Synthesis Toric CYL+3.00 SPH+11.00 SIPT300+11.00	DM000333240
IMUNOTEHNOMED S.R.L.	CUTTING EDGE S.A.S.	Franta	LENTILĂ INTRAOCULARĂ Synthesis Toric CYL+3.75 SPH+11.00 SIPT375+11.00	DM000333241
IMUNOTEHNOMED S.R.L.	CUTTING EDGE S.A.S.	Franta	LENTILĂ INTRAOCULARĂ Synthesis Toric CYL+4.50 SPH+11.00 SIPT450+11.00	DM000333242
IMUNOTEHNOMED S.R.L.	CUTTING EDGE S.A.S.	Franta	LENTILĂ INTRAOCULARĂ Synthesis Toric CYL+5.25 SPH+11.00 SIPT525+11.00	DM000333243
IMUNOTEHNOMED S.R.L.	CUTTING EDGE S.A.S.	Franta	LENTILĂ INTRAOCULARĂ Synthesis Toric CYL+6.00 SPH+11.00 SIPT600+11.00	DM000333244
IMUNOTEHNOMED S.R.L.	CUTTING EDGE S.A.S.	Franta	LENTILĂ INTRAOCULARĂ Synthesis Toric CYL+0.75 SPH+11.50 SIPT075+11.50	DM000333245
IMUNOTEHNOMED S.R.L.	CUTTING EDGE S.A.S.	Franta	LENTILĂ INTRAOCULARĂ Synthesis Toric CYL+1.00 SPH+11.50 SIPT100+11.50	DM000333246
IMUNOTEHNOMED S.R.L.	CUTTING EDGE S.A.S.	Franta	LENTILĂ INTRAOCULARĂ Synthesis Toric CYL+1.50 SPH+11.50 SIPT150+11.50	DM000333247
IMUNOTEHNOMED S.R.L.	CUTTING EDGE S.A.S.	Franta	LENTILĂ INTRAOCULARĂ Synthesis Toric CYL+2.25 SPH+11.50 SIPT225+11.50	DM000333248
IMUNOTEHNOMED S.R.L.	CUTTING EDGE S.A.S.	Franta	LENTILĂ INTRAOCULARĂ Synthesis Toric CYL+3.00 SPH+11.50 SIPT300+11.50	DM000333249
IMUNOTEHNOMED S.R.L.	CUTTING EDGE S.A.S.	Franta	LENTILĂ INTRAOCULARĂ Synthesis Toric CYL+3.75 SPH+11.50 SIPT375+11.50	DM000333250
IMUNOTEHNOMED S.R.L.	CUTTING EDGE S.A.S.	Franta	LENTILĂ INTRAOCULARĂ Synthesis Toric CYL+4.50 SPH+11.50 SIPT450+11.50	DM000333251
IMUNOTEHNOMED S.R.L.	CUTTING EDGE S.A.S.	Franta	LENTILĂ INTRAOCULARĂ Synthesis Toric CYL+5.25 SPH+11.50 SIPT525+11.50	DM000333252
IMUNOTEHNOMED S.R.L.	CUTTING EDGE S.A.S.	Franta	LENTILĂ INTRAOCULARĂ Synthesis Toric CYL+6.00 SPH+11.50 SIPT600+11.50	DM000333253
IMUNOTEHNOMED S.R.L.	CUTTING EDGE S.A.S.	Franta	LENTILĂ INTRAOCULARĂ Synthesis Toric CYL+0.75 SPH+12.00 SIPT075+12.00	DM000333254
IMUNOTEHNOMED S.R.L.	CUTTING EDGE S.A.S.	Franta	LENTILĂ INTRAOCULARĂ Synthesis Toric CYL+1.00 SPH+12.00 SIPT100+12.00	DM000333255
IMUNOTEHNOMED S.R.L.	CUTTING EDGE S.A.S.	Franta	LENTILĂ INTRAOCULARĂ Synthesis Toric CYL+1.50 SPH+12.00 SIPT150+12.00	DM000333256
IMUNOTEHNOMED S.R.L.	CUTTING EDGE S.A.S.	Franta	LENTILĂ INTRAOCULARĂ Synthesis Toric CYL+2.25 SPH+12.00 SIPT225+12.00	DM000333257
IMUNOTEHNOMED S.R.L.	CUTTING EDGE S.A.S.	Franta	LENTILĂ INTRAOCULARĂ Synthesis Toric CYL+3.00 SPH+12.00 SIPT300+12.00	DM000333258
IMUNOTEHNOMED S.R.L.	CUTTING EDGE S.A.S.	Franta	LENTILĂ INTRAOCULARĂ Synthesis Toric CYL+3.75 SPH+12.00 SIPT375+12.00	DM000333259
IMUNOTEHNOMED S.R.L.	CUTTING EDGE S.A.S.	Franta	LENTILĂ INTRAOCULARĂ Synthesis Toric CYL+4.50 SPH+12.00 SIPT450+12.00	DM000333260
IMUNOTEHNOMED S.R.L.	CUTTING EDGE S.A.S.	Franta	LENTILĂ INTRAOCULARĂ Synthesis Toric CYL+5.25 SPH+12.00 SIPT525+12.00	DM000333261
IMUNOTEHNOMED S.R.L.	CUTTING EDGE S.A.S.	Franta	LENTILĂ INTRAOCULARĂ Synthesis Toric CYL+6.00 SPH+12.00 SIPT600+12.00	DM000333262
IMUNOTEHNOMED S.R.L.	CUTTING EDGE S.A.S.	Franta	LENTILĂ INTRAOCULARĂ Synthesis Toric CYL+0.75 SPH+12.50 SIPT075+12.50	DM000333263
IMUNOTEHNOMED S.R.L.	CUTTING EDGE S.A.S.	Franta	LENTILĂ INTRAOCULARĂ Synthesis Toric CYL+1.00 SPH+12.50 SIPT100+12.50	DM000333264
IMUNOTEHNOMED S.R.L.	CUTTING EDGE S.A.S.	Franta	LENTILĂ INTRAOCULARĂ Synthesis Toric CYL+1.50 SPH+12.50 SIPT150+12.50	DM000333265

IMUNOTEHNOMED S.R.L.	CUTTING EDGE S.A.S.	Franta	LENTILĂ INTRAOCULARĂ Synthesis Toric CYL+2.25 SPH+12.50 SIPT225+12.50	DM000333266
IMUNOTEHNOMED S.R.L.	CUTTING EDGE S.A.S.	Franta	LENTILĂ INTRAOCULARĂ Synthesis Toric CYL+3.00 SPH+12.50 SIPT300+12.50	DM000333267
IMUNOTEHNOMED S.R.L.	CUTTING EDGE S.A.S.	Franta	LENTILĂ INTRAOCULARĂ Synthesis Toric CYL+3.75 SPH+12.50 SIPT375+12.50	DM000333268
IMUNOTEHNOMED S.R.L.	CUTTING EDGE S.A.S.	Franta	LENTILĂ INTRAOCULARĂ Synthesis Toric CYL+4.50 SPH+12.50 SIPT450+12.50	DM000333269
IMUNOTEHNOMED S.R.L.	CUTTING EDGE S.A.S.	Franta	LENTILĂ INTRAOCULARĂ Synthesis Toric CYL+5.25 SPH+12.50 SIPT525+12.50	DM000333270
IMUNOTEHNOMED S.R.L.	CUTTING EDGE S.A.S.	Franta	LENTILĂ INTRAOCULARĂ Synthesis Toric CYL+6.00 SPH+12.50 SIPT600+12.50	DM000333271
IMUNOTEHNOMED S.R.L.	CUTTING EDGE S.A.S.	Franta	LENTILĂ INTRAOCULARĂ Synthesis Toric CYL+0.75 SPH+13.00 SIPT075+13.00	DM000333272
IMUNOTEHNOMED S.R.L.	CUTTING EDGE S.A.S.	Franta	LENTILĂ INTRAOCULARĂ Synthesis Toric CYL+1.00 SPH+13.00 SIPT100+13.00	DM000333273
IMUNOTEHNOMED S.R.L.	CUTTING EDGE S.A.S.	Franta	LENTILĂ INTRAOCULARĂ Synthesis Toric CYL+1.50 SPH+13.00 SIPT150+13.00	DM000333274
IMUNOTEHNOMED S.R.L.	CUTTING EDGE S.A.S.	Franta	LENTILĂ INTRAOCULARĂ Synthesis Toric CYL+2.25 SPH+13.00 SIPT225+13.00	DM000333275
IMUNOTEHNOMED S.R.L.	CUTTING EDGE S.A.S.	Franta	LENTILĂ INTRAOCULARĂ Synthesis Toric CYL+3.00 SPH+13.00 SIPT300+13.00	DM000333276
IMUNOTEHNOMED S.R.L.	CUTTING EDGE S.A.S.	Franta	LENTILĂ INTRAOCULARĂ Synthesis Toric CYL+3.75 SPH+13.00 SIPT375+13.00	DM000333277
IMUNOTEHNOMED S.R.L.	CUTTING EDGE S.A.S.	Franta	LENTILĂ INTRAOCULARĂ Synthesis Toric CYL+4.50 SPH+13.00 SIPT450+13.00	DM000333278
IMUNOTEHNOMED S.R.L.	CUTTING EDGE S.A.S.	Franta	LENTILĂ INTRAOCULARĂ Synthesis Toric CYL+5.25 SPH+13.00 SIPT525+13.00	DM000333279
IMUNOTEHNOMED S.R.L.	CUTTING EDGE S.A.S.	Franta	LENTILĂ INTRAOCULARĂ Synthesis Toric CYL+6.00 SPH+13.00 SIPT600+13.00	DM000333280
IMUNOTEHNOMED S.R.L.	CUTTING EDGE S.A.S.	Franta	LENTILĂ INTRAOCULARĂ Synthesis Toric CYL+0.75 SPH+13.50 SIPT075+13.50	DM000333281
IMUNOTEHNOMED S.R.L.	CUTTING EDGE S.A.S.	Franta	LENTILĂ INTRAOCULARĂ Synthesis Toric CYL+1.00 SPH+13.50 SIPT100+13.50	DM000333282
IMUNOTEHNOMED S.R.L.	CUTTING EDGE S.A.S.	Franta	LENTILĂ INTRAOCULARĂ Synthesis Toric CYL+1.50 SPH+13.50 SIPT150+13.50	DM000333283
IMUNOTEHNOMED S.R.L.	CUTTING EDGE S.A.S.	Franta	LENTILĂ INTRAOCULARĂ Synthesis Toric CYL+2.25 SPH+13.50 SIPT225+13.50	DM000333284
IMUNOTEHNOMED S.R.L.	CUTTING EDGE S.A.S.	Franta	LENTILĂ INTRAOCULARĂ Synthesis Toric CYL+3.00 SPH+13.50 SIPT300+13.50	DM000333285
IMUNOTEHNOMED S.R.L.	CUTTING EDGE S.A.S.	Franta	LENTILĂ INTRAOCULARĂ Synthesis Toric CYL+3.75 SPH+13.50 SIPT375+13.50	DM000333286
IMUNOTEHNOMED S.R.L.	CUTTING EDGE S.A.S.	Franta	LENTILĂ INTRAOCULARĂ Synthesis Toric CYL+4.50 SPH+13.50 SIPT450+13.50	DM000333287
IMUNOTEHNOMED S.R.L.	CUTTING EDGE S.A.S.	Franta	LENTILĂ INTRAOCULARĂ Synthesis Toric CYL+5.25 SPH+13.50 SIPT525+13.50	DM000333288
IMUNOTEHNOMED S.R.L.	CUTTING EDGE S.A.S.	Franta	LENTILĂ INTRAOCULARĂ Synthesis Toric CYL+6.00 SPH+13.50 SIPT600+13.50	DM000333289
IMUNOTEHNOMED S.R.L.	CUTTING EDGE S.A.S.	Franta	LENTILĂ INTRAOCULARĂ Synthesis Toric CYL+0.75 SPH+14.00 SIPT075+14.00	DM000333290
IMUNOTEHNOMED S.R.L.	CUTTING EDGE S.A.S.	Franta	LENTILĂ INTRAOCULARĂ Synthesis Toric CYL+1.00 SPH+14.00 SIPT100+14.00	DM000333291
IMUNOTEHNOMED S.R.L.	CUTTING EDGE S.A.S.	Franta	LENTILĂ INTRAOCULARĂ Synthesis Toric CYL+1.50 SPH+14.00 SIPT150+14.00	DM000333292
IMUNOTEHNOMED S.R.L.	CUTTING EDGE S.A.S.	Franta	LENTILĂ INTRAOCULARĂ Synthesis Toric CYL+2.25 SPH+14.00 SIPT225+14.00	DM000333293
IMUNOTEHNOMED S.R.L.	CUTTING EDGE S.A.S.	Franta	LENTILĂ INTRAOCULARĂ Synthesis Toric CYL+3.00 SPH+14.00 SIPT300+14.00	DM000333294
IMUNOTEHNOMED S.R.L.	CUTTING EDGE S.A.S.	Franta	LENTILĂ INTRAOCULARĂ Synthesis Toric CYL+3.75 SPH+14.00 SIPT375+14.00	DM000333295
IMUNOTEHNOMED S.R.L.	CUTTING EDGE S.A.S.	Franta	LENTILĂ INTRAOCULARĂ Synthesis Toric CYL+4.50 SPH+14.00 SIPT450+14.00	DM000333296
IMUNOTEHNOMED S.R.L.	CUTTING EDGE S.A.S.	Franta	LENTILĂ INTRAOCULARĂ Synthesis Toric CYL+5.25 SPH+14.00 SIPT525+14.00	DM000333297
IMUNOTEHNOMED S.R.L.	CUTTING EDGE S.A.S.	Franta	LENTILĂ INTRAOCULARĂ Synthesis Toric CYL+6.00 SPH+14.00 SIPT600+14.00	DM000333298

IMUNOTEHNOMED S.R.L.	CUTTING EDGE S.A.S.	Franta	LENTILĂ INTRAOCULARĂ Synthesis Toric CYL+0.75 SPH+14.50 SIPT075+14.50	DM000333299
IMUNOTEHNOMED S.R.L.	CUTTING EDGE S.A.S.	Franta	LENTILĂ INTRAOCULARĂ Synthesis Toric CYL+1.00 SPH+14.50 SIPT100+14.50	DM000333300
IMUNOTEHNOMED S.R.L.	CUTTING EDGE S.A.S.	Franta	LENTILĂ INTRAOCULARĂ Synthesis Toric CYL+1.50 SPH+14.50 SIPT150+14.50	DM000333301
IMUNOTEHNOMED S.R.L.	CUTTING EDGE S.A.S.	Franta	LENTILĂ INTRAOCULARĂ Synthesis Toric CYL+2.25 SPH+14.50 SIPT225+14.50	DM000333302
IMUNOTEHNOMED S.R.L.	CUTTING EDGE S.A.S.	Franta	LENTILĂ INTRAOCULARĂ Synthesis Toric CYL+3.00 SPH+14.50 SIPT300+14.50	DM000333303
IMUNOTEHNOMED S.R.L.	CUTTING EDGE S.A.S.	Franta	LENTILĂ INTRAOCULARĂ Synthesis Toric CYL+3.75 SPH+14.50 SIPT375+14.50	DM000333304
IMUNOTEHNOMED S.R.L.	CUTTING EDGE S.A.S.	Franta	LENTILĂ INTRAOCULARĂ Synthesis Toric CYL+4.50 SPH+14.50 SIPT450+14.50	DM000333305
IMUNOTEHNOMED S.R.L.	CUTTING EDGE S.A.S.	Franta	LENTILĂ INTRAOCULARĂ Synthesis Toric CYL+5.25 SPH+14.50 SIPT525+14.50	DM000333306
IMUNOTEHNOMED S.R.L.	CUTTING EDGE S.A.S.	Franta	LENTILĂ INTRAOCULARĂ Synthesis Toric CYL+6.00 SPH+14.50 SIPT600+14.50	DM000333307
IMUNOTEHNOMED S.R.L.	CUTTING EDGE S.A.S.	Franta	LENTILĂ INTRAOCULARĂ Synthesis Toric CYL+0.75 SPH+15.00 SIPT075+15.00	DM000333308
IMUNOTEHNOMED S.R.L.	CUTTING EDGE S.A.S.	Franta	LENTILĂ INTRAOCULARĂ Synthesis Toric CYL+1.00 SPH+15.00 SIPT100+15.00	DM000333309
IMUNOTEHNOMED S.R.L.	CUTTING EDGE S.A.S.	Franta	LENTILĂ INTRAOCULARĂ Synthesis Toric CYL+1.50 SPH+15.00 SIPT150+15.00	DM000333310
IMUNOTEHNOMED S.R.L.	CUTTING EDGE S.A.S.	Franta	LENTILĂ INTRAOCULARĂ Synthesis Toric CYL+2.25 SPH+15.00 SIPT225+15.00	DM000333311
IMUNOTEHNOMED S.R.L.	CUTTING EDGE S.A.S.	Franta	LENTILĂ INTRAOCULARĂ Synthesis Toric CYL+3.00 SPH+15.00 SIPT300+15.00	DM000333312
IMUNOTEHNOMED S.R.L.	CUTTING EDGE S.A.S.	Franta	LENTILĂ INTRAOCULARĂ Synthesis Toric CYL+3.75 SPH+15.00 SIPT375+15.00	DM000333313
IMUNOTEHNOMED S.R.L.	CUTTING EDGE S.A.S.	Franta	LENTILĂ INTRAOCULARĂ Synthesis Toric CYL+4.50 SPH+15.00 SIPT450+15.00	DM000333314
IMUNOTEHNOMED S.R.L.	CUTTING EDGE S.A.S.	Franta	LENTILĂ INTRAOCULARĂ Synthesis Toric CYL+5.25 SPH+15.00 SIPT525+15.00	DM000333315
IMUNOTEHNOMED S.R.L.	CUTTING EDGE S.A.S.	Franta	LENTILĂ INTRAOCULARĂ Synthesis Toric CYL+6.00 SPH+15.00 SIPT600+15.00	DM000333316
IMUNOTEHNOMED S.R.L.	CUTTING EDGE S.A.S.	Franta	LENTILĂ INTRAOCULARĂ Synthesis Toric CYL+0.75 SPH+15.50 SIPT075+15.50	DM000333317
IMUNOTEHNOMED S.R.L.	CUTTING EDGE S.A.S.	Franta	LENTILĂ INTRAOCULARĂ Synthesis Toric CYL+1.00 SPH+15.50 SIPT100+15.50	DM000333318
IMUNOTEHNOMED S.R.L.	CUTTING EDGE S.A.S.	Franta	LENTILĂ INTRAOCULARĂ Synthesis Toric CYL+1.50 SPH+15.50 SIPT150+15.50	DM000333319
IMUNOTEHNOMED S.R.L.	CUTTING EDGE S.A.S.	Franta	LENTILĂ INTRAOCULARĂ Synthesis Toric CYL+2.25 SPH+15.50 SIPT225+15.50	DM000333320
IMUNOTEHNOMED S.R.L.	CUTTING EDGE S.A.S.	Franta	LENTILĂ INTRAOCULARĂ Synthesis Toric CYL+3.00 SPH+15.50 SIPT300+15.50	DM000333321
IMUNOTEHNOMED S.R.L.	CUTTING EDGE S.A.S.	Franta	LENTILĂ INTRAOCULARĂ Synthesis Toric CYL+3.75 SPH+15.50 SIPT375+15.50	DM000333322
IMUNOTEHNOMED S.R.L.	CUTTING EDGE S.A.S.	Franta	LENTILĂ INTRAOCULARĂ Synthesis Toric CYL+4.50 SPH+15.50 SIPT450+15.50	DM000333323
IMUNOTEHNOMED S.R.L.	CUTTING EDGE S.A.S.	Franta	LENTILĂ INTRAOCULARĂ Synthesis Toric CYL+5.25 SPH+15.50 SIPT525+15.50	DM000333324
IMUNOTEHNOMED S.R.L.	CUTTING EDGE S.A.S.	Franta	LENTILĂ INTRAOCULARĂ Synthesis Toric CYL+6.00 SPH+15.50 SIPT600+15.50	DM000333325
IMUNOTEHNOMED S.R.L.	CUTTING EDGE S.A.S.	Franta	LENTILĂ INTRAOCULARĂ Synthesis Toric CYL+0.75 SPH+16.00 SIPT075+16.00	DM000333326
IMUNOTEHNOMED S.R.L.	CUTTING EDGE S.A.S.	Franta	LENTILĂ INTRAOCULARĂ Synthesis Toric CYL+1.00 SPH+16.00 SIPT100+16.00	DM000333327
IMUNOTEHNOMED S.R.L.	CUTTING EDGE S.A.S.	Franta	LENTILĂ INTRAOCULARĂ Synthesis Toric CYL+1.50 SPH+16.00 SIPT150+16.00	DM000333328
IMUNOTEHNOMED S.R.L.	CUTTING EDGE S.A.S.	Franta	LENTILĂ INTRAOCULARĂ Synthesis Toric CYL+2.25 SPH+16.00 SIPT225+16.00	DM000333329
IMUNOTEHNOMED S.R.L.	CUTTING EDGE S.A.S.	Franta	LENTILĂ INTRAOCULARĂ Synthesis Toric CYL+3.00 SPH+16.00 SIPT300+16.00	DM000333330
IMUNOTEHNOMED S.R.L.	CUTTING EDGE S.A.S.	Franta	LENTILĂ INTRAOCULARĂ Synthesis Toric CYL+3.75 SPH+16.00 SIPT375+16.00	DM000333331

IMUNOTEHNOMED S.R.L.	CUTTING EDGE S.A.S.	Franta	LENTILĂ INTRAOCULARĂ Synthesis Toric CYL+4.50 SPH+16.00 SIPT450+16.00	DM000333332
IMUNOTEHNOMED S.R.L.	CUTTING EDGE S.A.S.	Franta	LENTILĂ INTRAOCULARĂ Synthesis Toric CYL+5.25 SPH+16.00 SIPT525+16.00	DM000333333
IMUNOTEHNOMED S.R.L.	CUTTING EDGE S.A.S.	Franta	LENTILĂ INTRAOCULARĂ Synthesis Toric CYL+6.00 SPH+16.00 SIPT600+16.00	DM000333334
IMUNOTEHNOMED S.R.L.	CUTTING EDGE S.A.S.	Franta	LENTILĂ INTRAOCULARĂ Synthesis Toric CYL+0.75 SPH+16.50 SIPT075+16.50	DM000333335
IMUNOTEHNOMED S.R.L.	CUTTING EDGE S.A.S.	Franta	LENTILĂ INTRAOCULARĂ Synthesis Toric CYL+1.00 SPH+16.50 SIPT100+16.50	DM000333336
IMUNOTEHNOMED S.R.L.	CUTTING EDGE S.A.S.	Franta	LENTILĂ INTRAOCULARĂ Synthesis Toric CYL+1.50 SPH+16.50 SIPT150+16.50	DM000333337
IMUNOTEHNOMED S.R.L.	CUTTING EDGE S.A.S.	Franta	LENTILĂ INTRAOCULARĂ Synthesis Toric CYL+2.25 SPH+16.50 SIPT225+16.50	DM000333338
IMUNOTEHNOMED S.R.L.	CUTTING EDGE S.A.S.	Franta	LENTILĂ INTRAOCULARĂ Synthesis Toric CYL+3.00 SPH+16.50 SIPT300+16.50	DM000333339
IMUNOTEHNOMED S.R.L.	CUTTING EDGE S.A.S.	Franta	LENTILĂ INTRAOCULARĂ Synthesis Toric CYL+3.75 SPH+16.50 SIPT375+16.50	DM000333340
IMUNOTEHNOMED S.R.L.	CUTTING EDGE S.A.S.	Franta	LENTILĂ INTRAOCULARĂ Synthesis Toric CYL+4.50 SPH+16.50 SIPT450+16.50	DM000333341
IMUNOTEHNOMED S.R.L.	CUTTING EDGE S.A.S.	Franta	LENTILĂ INTRAOCULARĂ Synthesis Toric CYL+5.25 SPH+16.50 SIPT525+16.50	DM000333342
IMUNOTEHNOMED S.R.L.	CUTTING EDGE S.A.S.	Franta	LENTILĂ INTRAOCULARĂ Synthesis Toric CYL+6.00 SPH+16.50 SIPT600+16.50	DM000333343
IMUNOTEHNOMED S.R.L.	CUTTING EDGE S.A.S.	Franta	LENTILĂ INTRAOCULARĂ Synthesis Toric CYL+0.75 SPH+17.00 SIPT075+17.00	DM000333344
IMUNOTEHNOMED S.R.L.	CUTTING EDGE S.A.S.	Franta	LENTILĂ INTRAOCULARĂ Synthesis Toric CYL+1.00 SPH+17.00 SIPT100+17.00	DM000333345
IMUNOTEHNOMED S.R.L.	CUTTING EDGE S.A.S.	Franta	LENTILĂ INTRAOCULARĂ Synthesis Toric CYL+1.50 SPH+17.00 SIPT150+17.00	DM000333346
IMUNOTEHNOMED S.R.L.	CUTTING EDGE S.A.S.	Franta	LENTILĂ INTRAOCULARĂ Synthesis Toric CYL+2.25 SPH+17.00 SIPT225+17.00	DM000333347
IMUNOTEHNOMED S.R.L.	CUTTING EDGE S.A.S.	Franta	LENTILĂ INTRAOCULARĂ Synthesis Toric CYL+3.00 SPH+17.00 SIPT300+17.00	DM000333348
IMUNOTEHNOMED S.R.L.	CUTTING EDGE S.A.S.	Franta	LENTILĂ INTRAOCULARĂ Synthesis Toric CYL+3.75 SPH+17.00 SIPT375+17.00	DM000333349
IMUNOTEHNOMED S.R.L.	CUTTING EDGE S.A.S.	Franta	LENTILĂ INTRAOCULARĂ Synthesis Toric CYL+4.50 SPH+17.00 SIPT450+17.00	DM000333350
IMUNOTEHNOMED S.R.L.	CUTTING EDGE S.A.S.	Franta	LENTILĂ INTRAOCULARĂ Synthesis Toric CYL+5.25 SPH+17.00 SIPT525+17.00	DM000333351
IMUNOTEHNOMED S.R.L.	CUTTING EDGE S.A.S.	Franta	LENTILĂ INTRAOCULARĂ Synthesis Toric CYL+6.00 SPH+17.00 SIPT600+17.00	DM000333352
IMUNOTEHNOMED S.R.L.	CUTTING EDGE S.A.S.	Franta	LENTILĂ INTRAOCULARĂ Synthesis Toric CYL+0.75 SPH+17.50 SIPT075+17.50	DM000333353
IMUNOTEHNOMED S.R.L.	CUTTING EDGE S.A.S.	Franta	LENTILĂ INTRAOCULARĂ Synthesis Toric CYL+1.00 SPH+17.50 SIPT100+17.50	DM000333354
IMUNOTEHNOMED S.R.L.	CUTTING EDGE S.A.S.	Franta	LENTILĂ INTRAOCULARĂ Synthesis Toric CYL+1.50 SPH+17.50 SIPT150+17.50	DM000333355
IMUNOTEHNOMED S.R.L.	CUTTING EDGE S.A.S.	Franta	LENTILĂ INTRAOCULARĂ Synthesis Toric CYL+2.25 SPH+17.50 SIPT225+17.50	DM000333356
IMUNOTEHNOMED S.R.L.	CUTTING EDGE S.A.S.	Franta	LENTILĂ INTRAOCULARĂ Synthesis Toric CYL+3.00 SPH+17.50 SIPT300+17.50	DM000333357
IMUNOTEHNOMED S.R.L.	CUTTING EDGE S.A.S.	Franta	LENTILĂ INTRAOCULARĂ Synthesis Toric CYL+3.75 SPH+17.50 SIPT375+17.50	DM000333358
IMUNOTEHNOMED S.R.L.	CUTTING EDGE S.A.S.	Franta	LENTILĂ INTRAOCULARĂ Synthesis Toric CYL+4.50 SPH+17.50 SIPT450+17.50	DM000333359
IMUNOTEHNOMED S.R.L.	CUTTING EDGE S.A.S.	Franta	LENTILĂ INTRAOCULARĂ Synthesis Toric CYL+5.25 SPH+17.50 SIPT525+17.50	DM000333360
IMUNOTEHNOMED S.R.L.	CUTTING EDGE S.A.S.	Franta	LENTILĂ INTRAOCULARĂ Synthesis Toric CYL+6.00 SPH+17.50 SIPT600+17.50	DM000333361
IMUNOTEHNOMED S.R.L.	CUTTING EDGE S.A.S.	Franta	LENTILĂ INTRAOCULARĂ Synthesis Toric CYL+0.75 SPH+18.00 SIPT075+18.00	DM000333362
IMUNOTEHNOMED S.R.L.	CUTTING EDGE S.A.S.	Franta	LENTILĂ INTRAOCULARĂ Synthesis Toric CYL+1.00 SPH+18.00 SIPT100+18.00	DM000333363
IMUNOTEHNOMED S.R.L.	CUTTING EDGE S.A.S.	Franta	LENTILĂ INTRAOCULARĂ Synthesis Toric CYL+1.50 SPH+18.00 SIPT150+18.00	DM000333364

IMUNOTEHNOMED S.R.L.	CUTTING EDGE S.A.S.	Franta	LENTILĂ INTRAOCULARĂ Synthesis Toric CYL+2.25 SPH+18.00 SIPT225+18.00	DM000333365
IMUNOTEHNOMED S.R.L.	CUTTING EDGE S.A.S.	Franta	LENTILĂ INTRAOCULARĂ Synthesis Toric CYL+3.00 SPH+18.00 SIPT300+18.00	DM000333366
IMUNOTEHNOMED S.R.L.	CUTTING EDGE S.A.S.	Franta	LENTILĂ INTRAOCULARĂ Synthesis Toric CYL+3.75 SPH+18.00 SIPT375+18.00	DM000333367
IMUNOTEHNOMED S.R.L.	CUTTING EDGE S.A.S.	Franta	LENTILĂ INTRAOCULARĂ Synthesis Toric CYL+4.50 SPH+18.00 SIPT450+18.00	DM000333368
IMUNOTEHNOMED S.R.L.	CUTTING EDGE S.A.S.	Franta	LENTILĂ INTRAOCULARĂ Synthesis Toric CYL+5.25 SPH+18.00 SIPT525+18.00	DM000333369
IMUNOTEHNOMED S.R.L.	CUTTING EDGE S.A.S.	Franta	LENTILĂ INTRAOCULARĂ Synthesis Toric CYL+6.00 SPH+18.00 SIPT600+18.00	DM000333370
IMUNOTEHNOMED S.R.L.	CUTTING EDGE S.A.S.	Franta	LENTILĂ INTRAOCULARĂ Synthesis Toric CYL+0.75 SPH+18.50 SIPT075+18.50	DM000333371
IMUNOTEHNOMED S.R.L.	CUTTING EDGE S.A.S.	Franta	LENTILĂ INTRAOCULARĂ Synthesis Toric CYL+1.00 SPH+18.50 SIPT100+18.50	DM000333372
IMUNOTEHNOMED S.R.L.	CUTTING EDGE S.A.S.	Franta	LENTILĂ INTRAOCULARĂ Synthesis Toric CYL+1.50 SPH+18.50 SIPT150+18.50	DM000333373
IMUNOTEHNOMED S.R.L.	CUTTING EDGE S.A.S.	Franta	LENTILĂ INTRAOCULARĂ Synthesis Toric CYL+2.25 SPH+18.50 SIPT225+18.50	DM000333374
IMUNOTEHNOMED S.R.L.	CUTTING EDGE S.A.S.	Franta	LENTILĂ INTRAOCULARĂ Synthesis Toric CYL+3.00 SPH+18.50 SIPT300+18.50	DM000333375
IMUNOTEHNOMED S.R.L.	CUTTING EDGE S.A.S.	Franta	LENTILĂ INTRAOCULARĂ Synthesis Toric CYL+3.75 SPH+18.50 SIPT375+18.50	DM000333376
IMUNOTEHNOMED S.R.L.	CUTTING EDGE S.A.S.	Franta	LENTILĂ INTRAOCULARĂ Synthesis Toric CYL+4.50 SPH+18.50 SIPT450+18.50	DM000333377
IMUNOTEHNOMED S.R.L.	CUTTING EDGE S.A.S.	Franta	LENTILĂ INTRAOCULARĂ Synthesis Toric CYL+5.25 SPH+18.50 SIPT525+18.50	DM000333378
IMUNOTEHNOMED S.R.L.	CUTTING EDGE S.A.S.	Franta	LENTILĂ INTRAOCULARĂ Synthesis Toric CYL+6.00 SPH+18.50 SIPT600+18.50	DM000333379
IMUNOTEHNOMED S.R.L.	CUTTING EDGE S.A.S.	Franta	LENTILĂ INTRAOCULARĂ Synthesis Toric CYL+0.75 SPH+19.00 SIPT075+19.00	DM000333380
IMUNOTEHNOMED S.R.L.	CUTTING EDGE S.A.S.	Franta	LENTILĂ INTRAOCULARĂ Synthesis Toric CYL+1.00 SPH+19.00 SIPT100+19.00	DM000333381
IMUNOTEHNOMED S.R.L.	CUTTING EDGE S.A.S.	Franta	LENTILĂ INTRAOCULARĂ Synthesis Toric CYL+1.50 SPH+19.00 SIPT150+19.00	DM000333382
IMUNOTEHNOMED S.R.L.	CUTTING EDGE S.A.S.	Franta	LENTILĂ INTRAOCULARĂ Synthesis Toric CYL+2.25 SPH+19.00 SIPT225+19.00	DM000333383
IMUNOTEHNOMED S.R.L.	CUTTING EDGE S.A.S.	Franta	LENTILĂ INTRAOCULARĂ Synthesis Toric CYL+3.00 SPH+19.00 SIPT300+19.00	DM000333384
IMUNOTEHNOMED S.R.L.	CUTTING EDGE S.A.S.	Franta	LENTILĂ INTRAOCULARĂ Synthesis Toric CYL+3.75 SPH+19.00 SIPT375+19.00	DM000333385
IMUNOTEHNOMED S.R.L.	CUTTING EDGE S.A.S.	Franta	LENTILĂ INTRAOCULARĂ Synthesis Toric CYL+4.50 SPH+19.00 SIPT450+19.00	DM000333386
IMUNOTEHNOMED S.R.L.	CUTTING EDGE S.A.S.	Franta	LENTILĂ INTRAOCULARĂ Synthesis Toric CYL+5.25 SPH+19.00 SIPT525+19.00	DM000333387
IMUNOTEHNOMED S.R.L.	CUTTING EDGE S.A.S.	Franta	LENTILĂ INTRAOCULARĂ Synthesis Toric CYL+6.00 SPH+19.00 SIPT600+19.00	DM000333388
IMUNOTEHNOMED S.R.L.	CUTTING EDGE S.A.S.	Franta	LENTILĂ INTRAOCULARĂ Synthesis Toric CYL+0.75 SPH+19.50 SIPT075+19.50	DM000333389
IMUNOTEHNOMED S.R.L.	CUTTING EDGE S.A.S.	Franta	LENTILĂ INTRAOCULARĂ Synthesis Toric CYL+1.00 SPH+19.50 SIPT100+19.50	DM000333390
IMUNOTEHNOMED S.R.L.	CUTTING EDGE S.A.S.	Franta	LENTILĂ INTRAOCULARĂ Synthesis Toric CYL+1.50 SPH+19.50 SIPT150+19.50	DM000333391
IMUNOTEHNOMED S.R.L.	CUTTING EDGE S.A.S.	Franta	LENTILĂ INTRAOCULARĂ Synthesis Toric CYL+2.25 SPH+19.50 SIPT225+19.50	DM000333392
IMUNOTEHNOMED S.R.L.	CUTTING EDGE S.A.S.	Franta	LENTILĂ INTRAOCULARĂ Synthesis Toric CYL+3.00 SPH+19.50 SIPT300+19.50	DM000333393
IMUNOTEHNOMED S.R.L.	CUTTING EDGE S.A.S.	Franta	LENTILĂ INTRAOCULARĂ Synthesis Toric CYL+3.75 SPH+19.50 SIPT375+19.50	DM000333394
IMUNOTEHNOMED S.R.L.	CUTTING EDGE S.A.S.	Franta	LENTILĂ INTRAOCULARĂ Synthesis Toric CYL+4.50 SPH+19.50 SIPT450+19.50	DM000333395
IMUNOTEHNOMED S.R.L.	CUTTING EDGE S.A.S.	Franta	LENTILĂ INTRAOCULARĂ Synthesis Toric CYL+5.25 SPH+19.50 SIPT525+19.50	DM000333396
IMUNOTEHNOMED S.R.L.	CUTTING EDGE S.A.S.	Franta	LENTILĂ INTRAOCULARĂ Synthesis Toric CYL+6.00 SPH+19.50 SIPT600+19.50	DM000333397

IMUNOTEHNOMED S.R.L.	CUTTING EDGE S.A.S.	Franta	LENTILĂ INTRAOCULARĂ Synthesis Toric CYL+0.75 SPH+20.00 SIPT075+20.00	DM000333398
IMUNOTEHNOMED S.R.L.	CUTTING EDGE S.A.S.	Franta	LENTILĂ INTRAOCULARĂ Synthesis Toric CYL+1.00 SPH+20.00 SIPT100+20.00	DM000333399
IMUNOTEHNOMED S.R.L.	CUTTING EDGE S.A.S.	Franta	LENTILĂ INTRAOCULARĂ Synthesis Toric CYL+1.50 SPH+20.00 SIPT150+20.00	DM000333400
IMUNOTEHNOMED S.R.L.	CUTTING EDGE S.A.S.	Franta	LENTILĂ INTRAOCULARĂ Synthesis Toric CYL+2.25 SPH+20.00 SIPT225+20.00	DM000333401
IMUNOTEHNOMED S.R.L.	CUTTING EDGE S.A.S.	Franta	LENTILĂ INTRAOCULARĂ Synthesis Toric CYL+3.00 SPH+20.00 SIPT300+20.00	DM000333402
IMUNOTEHNOMED S.R.L.	CUTTING EDGE S.A.S.	Franta	LENTILĂ INTRAOCULARĂ Synthesis Toric CYL+3.75 SPH+20.00 SIPT375+20.00	DM000333403
IMUNOTEHNOMED S.R.L.	CUTTING EDGE S.A.S.	Franta	LENTILĂ INTRAOCULARĂ Synthesis Toric CYL+4.50 SPH+20.00 SIPT450+20.00	DM000333404
IMUNOTEHNOMED S.R.L.	CUTTING EDGE S.A.S.	Franta	LENTILĂ INTRAOCULARĂ Synthesis Toric CYL+5.25 SPH+20.00 SIPT525+20.00	DM000333405
IMUNOTEHNOMED S.R.L.	CUTTING EDGE S.A.S.	Franta	LENTILĂ INTRAOCULARĂ Synthesis Toric CYL+6.00 SPH+20.00 SIPT600+20.00	DM000333406
IMUNOTEHNOMED S.R.L.	CUTTING EDGE S.A.S.	Franta	LENTILĂ INTRAOCULARĂ Synthesis Toric CYL+0.75 SPH+20.50 SIPT075+20.50	DM000333407
IMUNOTEHNOMED S.R.L.	CUTTING EDGE S.A.S.	Franta	LENTILĂ INTRAOCULARĂ Synthesis Toric CYL+1.00 SPH+20.50 SIPT100+20.50	DM000333408
IMUNOTEHNOMED S.R.L.	CUTTING EDGE S.A.S.	Franta	LENTILĂ INTRAOCULARĂ Synthesis Toric CYL+1.50 SPH+20.50 SIPT150+20.50	DM000333409
IMUNOTEHNOMED S.R.L.	CUTTING EDGE S.A.S.	Franta	LENTILĂ INTRAOCULARĂ Synthesis Toric CYL+2.25 SPH+20.50 SIPT225+20.50	DM000333410
IMUNOTEHNOMED S.R.L.	CUTTING EDGE S.A.S.	Franta	LENTILĂ INTRAOCULARĂ Synthesis Toric CYL+3.00 SPH+20.50 SIPT300+20.50	DM000333411
IMUNOTEHNOMED S.R.L.	CUTTING EDGE S.A.S.	Franta	LENTILĂ INTRAOCULARĂ Synthesis Toric CYL+3.75 SPH+20.50 SIPT375+20.50	DM000333412
IMUNOTEHNOMED S.R.L.	CUTTING EDGE S.A.S.	Franta	LENTILĂ INTRAOCULARĂ Synthesis Toric CYL+4.50 SPH+20.50 SIPT450+20.50	DM000333413
IMUNOTEHNOMED S.R.L.	CUTTING EDGE S.A.S.	Franta	LENTILĂ INTRAOCULARĂ Synthesis Toric CYL+5.25 SPH+20.50 SIPT525+20.50	DM000333414
IMUNOTEHNOMED S.R.L.	CUTTING EDGE S.A.S.	Franta	LENTILĂ INTRAOCULARĂ Synthesis Toric CYL+6.00 SPH+20.50 SIPT600+20.50	DM000333415
IMUNOTEHNOMED S.R.L.	CUTTING EDGE S.A.S.	Franta	LENTILĂ INTRAOCULARĂ Synthesis Toric CYL+0.75 SPH+21.00 SIPT075+21.00	DM000333416
IMUNOTEHNOMED S.R.L.	CUTTING EDGE S.A.S.	Franta	LENTILĂ INTRAOCULARĂ Synthesis Toric CYL+1.00 SPH+21.00 SIPT100+21.00	DM000333417
IMUNOTEHNOMED S.R.L.	CUTTING EDGE S.A.S.	Franta	LENTILĂ INTRAOCULARĂ Synthesis Toric CYL+1.50 SPH+21.00 SIPT150+21.00	DM000333418
IMUNOTEHNOMED S.R.L.	CUTTING EDGE S.A.S.	Franta	LENTILĂ INTRAOCULARĂ Synthesis Toric CYL+2.25 SPH+21.00 SIPT225+21.00	DM000333419
IMUNOTEHNOMED S.R.L.	CUTTING EDGE S.A.S.	Franta	LENTILĂ INTRAOCULARĂ Synthesis Toric CYL+3.00 SPH+21.00 SIPT300+21.00	DM000333420
IMUNOTEHNOMED S.R.L.	CUTTING EDGE S.A.S.	Franta	LENTILĂ INTRAOCULARĂ Synthesis Toric CYL+3.75 SPH+21.00 SIPT375+21.00	DM000333421
IMUNOTEHNOMED S.R.L.	CUTTING EDGE S.A.S.	Franta	LENTILĂ INTRAOCULARĂ Synthesis Toric CYL+4.50 SPH+21.00 SIPT450+21.00	DM000333422
IMUNOTEHNOMED S.R.L.	CUTTING EDGE S.A.S.	Franta	LENTILĂ INTRAOCULARĂ Synthesis Toric CYL+5.25 SPH+21.00 SIPT525+21.00	DM000333423
IMUNOTEHNOMED S.R.L.	CUTTING EDGE S.A.S.	Franta	LENTILĂ INTRAOCULARĂ Synthesis Toric CYL+6.00 SPH+21.00 SIPT600+21.00	DM000333424
IMUNOTEHNOMED S.R.L.	CUTTING EDGE S.A.S.	Franta	LENTILĂ INTRAOCULARĂ Synthesis Toric CYL+0.75 SPH+21.50 SIPT075+21.50	DM000333425
IMUNOTEHNOMED S.R.L.	CUTTING EDGE S.A.S.	Franta	LENTILĂ INTRAOCULARĂ Synthesis Toric CYL+1.00 SPH+21.50 SIPT100+21.50	DM000333426
IMUNOTEHNOMED S.R.L.	CUTTING EDGE S.A.S.	Franta	LENTILĂ INTRAOCULARĂ Synthesis Toric CYL+1.50 SPH+21.50 SIPT150+21.50	DM000333427
IMUNOTEHNOMED S.R.L.	CUTTING EDGE S.A.S.	Franta	LENTILĂ INTRAOCULARĂ Synthesis Toric CYL+2.25 SPH+21.50 SIPT225+21.50	DM000333428
IMUNOTEHNOMED S.R.L.	CUTTING EDGE S.A.S.	Franta	LENTILĂ INTRAOCULARĂ Synthesis Toric CYL+3.00 SPH+21.50 SIPT300+21.50	DM000333429
IMUNOTEHNOMED S.R.L.	CUTTING EDGE S.A.S.	Franta	LENTILĂ INTRAOCULARĂ Synthesis Toric CYL+3.75 SPH+21.50 SIPT375+21.50	DM000333430

IMUNOTEHNOMED S.R.L.	CUTTING EDGE S.A.S.	Franta	LENTILĂ INTRAOCULARĂ Synthesis Toric CYL+4.50 SPH+21.50 SIPT450+21.50	DM000333431
IMUNOTEHNOMED S.R.L.	CUTTING EDGE S.A.S.	Franta	LENTILĂ INTRAOCULARĂ Synthesis Toric CYL+5.25 SPH+21.50 SIPT525+21.50	DM000333432
IMUNOTEHNOMED S.R.L.	CUTTING EDGE S.A.S.	Franta	LENTILĂ INTRAOCULARĂ Synthesis Toric CYL+6.00 SPH+21.50 SIPT600+21.50	DM000333433
IMUNOTEHNOMED S.R.L.	CUTTING EDGE S.A.S.	Franta	LENTILĂ INTRAOCULARĂ Synthesis Toric CYL+0.75 SPH+22.00 SIPT075+22.00	DM000333434
IMUNOTEHNOMED S.R.L.	CUTTING EDGE S.A.S.	Franta	LENTILĂ INTRAOCULARĂ Synthesis Toric CYL+1.00 SPH+22.00 SIPT100+22.00	DM000333435
IMUNOTEHNOMED S.R.L.	CUTTING EDGE S.A.S.	Franta	LENTILĂ INTRAOCULARĂ Synthesis Toric CYL+1.50 SPH+22.00 SIPT150+22.00	DM000333436
IMUNOTEHNOMED S.R.L.	CUTTING EDGE S.A.S.	Franta	LENTILĂ INTRAOCULARĂ Synthesis Toric CYL+2.25 SPH+22.00 SIPT225+22.00	DM000333437
IMUNOTEHNOMED S.R.L.	CUTTING EDGE S.A.S.	Franta	LENTILĂ INTRAOCULARĂ Synthesis Toric CYL+3.00 SPH+22.00 SIPT300+22.00	DM000333438
IMUNOTEHNOMED S.R.L.	CUTTING EDGE S.A.S.	Franta	LENTILĂ INTRAOCULARĂ Synthesis Toric CYL+3.75 SPH+22.00 SIPT375+22.00	DM000333439
IMUNOTEHNOMED S.R.L.	CUTTING EDGE S.A.S.	Franta	LENTILĂ INTRAOCULARĂ Synthesis Toric CYL+4.50 SPH+22.00 SIPT450+22.00	DM000333440
IMUNOTEHNOMED S.R.L.	CUTTING EDGE S.A.S.	Franta	LENTILĂ INTRAOCULARĂ Synthesis Toric CYL+5.25 SPH+22.00 SIPT525+22.00	DM000333441
IMUNOTEHNOMED S.R.L.	CUTTING EDGE S.A.S.	Franta	LENTILĂ INTRAOCULARĂ Synthesis Toric CYL+6.00 SPH+22.00 SIPT600+22.00	DM000333442
IMUNOTEHNOMED S.R.L.	CUTTING EDGE S.A.S.	Franta	LENTILĂ INTRAOCULARĂ Synthesis Toric CYL+0.75 SPH+22.50 SIPT075+22.50	DM000333443
IMUNOTEHNOMED S.R.L.	CUTTING EDGE S.A.S.	Franta	LENTILĂ INTRAOCULARĂ Synthesis Toric CYL+1.00 SPH+22.50 SIPT100+22.50	DM000333444
IMUNOTEHNOMED S.R.L.	CUTTING EDGE S.A.S.	Franta	LENTILĂ INTRAOCULARĂ Synthesis Toric CYL+1.50 SPH+22.50 SIPT150+22.50	DM000333445
IMUNOTEHNOMED S.R.L.	CUTTING EDGE S.A.S.	Franta	LENTILĂ INTRAOCULARĂ Synthesis Toric CYL+2.25 SPH+22.50 SIPT225+22.50	DM000333446
IMUNOTEHNOMED S.R.L.	CUTTING EDGE S.A.S.	Franta	LENTILĂ INTRAOCULARĂ Synthesis Toric CYL+3.00 SPH+22.50 SIPT300+22.50	DM000333447
IMUNOTEHNOMED S.R.L.	CUTTING EDGE S.A.S.	Franta	LENTILĂ INTRAOCULARĂ Synthesis Toric CYL+3.75 SPH+22.50 SIPT375+22.50	DM000333448
IMUNOTEHNOMED S.R.L.	CUTTING EDGE S.A.S.	Franta	LENTILĂ INTRAOCULARĂ Synthesis Toric CYL+4.50 SPH+22.50 SIPT450+22.50	DM000333449
IMUNOTEHNOMED S.R.L.	CUTTING EDGE S.A.S.	Franta	LENTILĂ INTRAOCULARĂ Synthesis Toric CYL+5.25 SPH+22.50 SIPT525+22.50	DM000333450
IMUNOTEHNOMED S.R.L.	CUTTING EDGE S.A.S.	Franta	LENTILĂ INTRAOCULARĂ Synthesis Toric CYL+6.00 SPH+22.50 SIPT600+22.50	DM000333451
IMUNOTEHNOMED S.R.L.	CUTTING EDGE S.A.S.	Franta	LENTILĂ INTRAOCULARĂ Synthesis Toric CYL+0.75 SPH+23.00 SIPT075+23.00	DM000333452
IMUNOTEHNOMED S.R.L.	CUTTING EDGE S.A.S.	Franta	LENTILĂ INTRAOCULARĂ Synthesis Toric CYL+1.00 SPH+23.00 SIPT100+23.00	DM000333453
IMUNOTEHNOMED S.R.L.	CUTTING EDGE S.A.S.	Franta	LENTILĂ INTRAOCULARĂ Synthesis Toric CYL+1.50 SPH+23.00 SIPT150+23.00	DM000333454
IMUNOTEHNOMED S.R.L.	CUTTING EDGE S.A.S.	Franta	LENTILĂ INTRAOCULARĂ Synthesis Toric CYL+2.25 SPH+23.00 SIPT225+23.00	DM000333455
IMUNOTEHNOMED S.R.L.	CUTTING EDGE S.A.S.	Franta	LENTILĂ INTRAOCULARĂ Synthesis Toric CYL+3.00 SPH+23.00 SIPT300+23.00	DM000333456
IMUNOTEHNOMED S.R.L.	CUTTING EDGE S.A.S.	Franta	LENTILĂ INTRAOCULARĂ Synthesis Toric CYL+3.75 SPH+23.00 SIPT375+23.00	DM000333457
IMUNOTEHNOMED S.R.L.	CUTTING EDGE S.A.S.	Franta	LENTILĂ INTRAOCULARĂ Synthesis Toric CYL+4.50 SPH+23.00 SIPT450+23.00	DM000333458
IMUNOTEHNOMED S.R.L.	CUTTING EDGE S.A.S.	Franta	LENTILĂ INTRAOCULARĂ Synthesis Toric CYL+5.25 SPH+23.00 SIPT525+23.00	DM000333459
IMUNOTEHNOMED S.R.L.	CUTTING EDGE S.A.S.	Franta	LENTILĂ INTRAOCULARĂ Synthesis Toric CYL+6.00 SPH+23.00 SIPT600+23.00	DM000333460
IMUNOTEHNOMED S.R.L.	CUTTING EDGE S.A.S.	Franta	LENTILĂ INTRAOCULARĂ Synthesis Toric CYL+0.75 SPH+23.50 SIPT075+23.50	DM000333461
IMUNOTEHNOMED S.R.L.	CUTTING EDGE S.A.S.	Franta	LENTILĂ INTRAOCULARĂ Synthesis Toric CYL+1.00 SPH+23.50 SIPT100+23.50	DM000333462
IMUNOTEHNOMED S.R.L.	CUTTING EDGE S.A.S.	Franta	LENTILĂ INTRAOCULARĂ Synthesis Toric CYL+1.50 SPH+23.50 SIPT150+23.50	DM000333463

IMUNOTEHNOMED S.R.L.	CUTTING EDGE S.A.S.	Franta	LENTILĂ INTRAOCULARĂ Synthesis Toric CYL+2.25 SPH+23.50 SIPT225+23.50	DM000333464
IMUNOTEHNOMED S.R.L.	CUTTING EDGE S.A.S.	Franta	LENTILĂ INTRAOCULARĂ Synthesis Toric CYL+3.00 SPH+23.50 SIPT300+23.50	DM000333465
IMUNOTEHNOMED S.R.L.	CUTTING EDGE S.A.S.	Franta	LENTILĂ INTRAOCULARĂ Synthesis Toric CYL+3.75 SPH+23.50 SIPT375+23.50	DM000333466
IMUNOTEHNOMED S.R.L.	CUTTING EDGE S.A.S.	Franta	LENTILĂ INTRAOCULARĂ Synthesis Toric CYL+4.50 SPH+23.50 SIPT450+23.50	DM000333467
IMUNOTEHNOMED S.R.L.	CUTTING EDGE S.A.S.	Franta	LENTILĂ INTRAOCULARĂ Synthesis Toric CYL+5.25 SPH+23.50 SIPT525+23.50	DM000333468
IMUNOTEHNOMED S.R.L.	CUTTING EDGE S.A.S.	Franta	LENTILĂ INTRAOCULARĂ Synthesis Toric CYL+6.00 SPH+23.50 SIPT600+23.50	DM000333469
IMUNOTEHNOMED S.R.L.	CUTTING EDGE S.A.S.	Franta	LENTILĂ INTRAOCULARĂ Synthesis Toric CYL+0.75 SPH+24.00 SIPT075+24.00	DM000333470
IMUNOTEHNOMED S.R.L.	CUTTING EDGE S.A.S.	Franta	LENTILĂ INTRAOCULARĂ Synthesis Toric CYL+1.00 SPH+24.00 SIPT100+24.00	DM000333471
IMUNOTEHNOMED S.R.L.	CUTTING EDGE S.A.S.	Franta	LENTILĂ INTRAOCULARĂ Synthesis Toric CYL+1.50 SPH+24.00 SIPT150+24.00	DM000333472
IMUNOTEHNOMED S.R.L.	CUTTING EDGE S.A.S.	Franta	LENTILĂ INTRAOCULARĂ Synthesis Toric CYL+2.25 SPH+24.00 SIPT225+24.00	DM000333473
IMUNOTEHNOMED S.R.L.	CUTTING EDGE S.A.S.	Franta	LENTILĂ INTRAOCULARĂ Synthesis Toric CYL+3.00 SPH+24.00 SIPT300+24.00	DM000333474
IMUNOTEHNOMED S.R.L.	CUTTING EDGE S.A.S.	Franta	LENTILĂ INTRAOCULARĂ Synthesis Toric CYL+3.75 SPH+24.00 SIPT375+24.00	DM000333475
IMUNOTEHNOMED S.R.L.	CUTTING EDGE S.A.S.	Franta	LENTILĂ INTRAOCULARĂ Synthesis Toric CYL+4.50 SPH+24.00 SIPT450+24.00	DM000333476
IMUNOTEHNOMED S.R.L.	CUTTING EDGE S.A.S.	Franta	LENTILĂ INTRAOCULARĂ Synthesis Toric CYL+5.25 SPH+24.00 SIPT525+24.00	DM000333477
IMUNOTEHNOMED S.R.L.	CUTTING EDGE S.A.S.	Franta	LENTILĂ INTRAOCULARĂ Synthesis Toric CYL+6.00 SPH+24.00 SIPT600+24.00	DM000333478
IMUNOTEHNOMED S.R.L.	CUTTING EDGE S.A.S.	Franta	LENTILĂ INTRAOCULARĂ Synthesis Toric CYL+0.75 SPH+24.50 SIPT075+24.50	DM000333479
IMUNOTEHNOMED S.R.L.	CUTTING EDGE S.A.S.	Franta	LENTILĂ INTRAOCULARĂ Synthesis Toric CYL+1.00 SPH+24.50 SIPT100+24.50	DM000333480
IMUNOTEHNOMED S.R.L.	CUTTING EDGE S.A.S.	Franta	LENTILĂ INTRAOCULARĂ Synthesis Toric CYL+1.50 SPH+24.50 SIPT150+24.50	DM000333481
IMUNOTEHNOMED S.R.L.	CUTTING EDGE S.A.S.	Franta	LENTILĂ INTRAOCULARĂ Synthesis Toric CYL+2.25 SPH+24.50 SIPT225+24.50	DM000333482
IMUNOTEHNOMED S.R.L.	CUTTING EDGE S.A.S.	Franta	LENTILĂ INTRAOCULARĂ Synthesis Toric CYL+3.00 SPH+24.50 SIPT300+24.50	DM000333483
IMUNOTEHNOMED S.R.L.	CUTTING EDGE S.A.S.	Franta	LENTILĂ INTRAOCULARĂ Synthesis Toric CYL+3.75 SPH+24.50 SIPT375+24.50	DM000333484
IMUNOTEHNOMED S.R.L.	CUTTING EDGE S.A.S.	Franta	LENTILĂ INTRAOCULARĂ Synthesis Toric CYL+4.50 SPH+24.50 SIPT450+24.50	DM000333485
IMUNOTEHNOMED S.R.L.	CUTTING EDGE S.A.S.	Franta	LENTILĂ INTRAOCULARĂ Synthesis Toric CYL+5.25 SPH+24.50 SIPT525+24.50	DM000333486
IMUNOTEHNOMED S.R.L.	CUTTING EDGE S.A.S.	Franta	LENTILĂ INTRAOCULARĂ Synthesis Toric CYL+6.00 SPH+24.50 SIPT600+24.50	DM000333487
IMUNOTEHNOMED S.R.L.	CUTTING EDGE S.A.S.	Franta	LENTILĂ INTRAOCULARĂ Synthesis Toric CYL+0.75 SPH+25.00 SIPT075+25.00	DM000333488
IMUNOTEHNOMED S.R.L.	CUTTING EDGE S.A.S.	Franta	LENTILĂ INTRAOCULARĂ Synthesis Toric CYL+1.00 SPH+25.00 SIPT100+25.00	DM000333489
IMUNOTEHNOMED S.R.L.	CUTTING EDGE S.A.S.	Franta	LENTILĂ INTRAOCULARĂ Synthesis Toric CYL+1.50 SPH+25.00 SIPT150+25.00	DM000333490
IMUNOTEHNOMED S.R.L.	CUTTING EDGE S.A.S.	Franta	LENTILĂ INTRAOCULARĂ Synthesis Toric CYL+2.25 SPH+25.00 SIPT225+25.00	DM000333491
IMUNOTEHNOMED S.R.L.	CUTTING EDGE S.A.S.	Franta	LENTILĂ INTRAOCULARĂ Synthesis Toric CYL+3.00 SPH+25.00 SIPT300+25.00	DM000333492
IMUNOTEHNOMED S.R.L.	CUTTING EDGE S.A.S.	Franta	LENTILĂ INTRAOCULARĂ Synthesis Toric CYL+3.75 SPH+25.00 SIPT375+25.00	DM000333493
IMUNOTEHNOMED S.R.L.	CUTTING EDGE S.A.S.	Franta	LENTILĂ INTRAOCULARĂ Synthesis Toric CYL+4.50 SPH+25.00 SIPT450+25.00	DM000333494
IMUNOTEHNOMED S.R.L.	CUTTING EDGE S.A.S.	Franta	LENTILĂ INTRAOCULARĂ Synthesis Toric CYL+5.25 SPH+25.00 SIPT525+25.00	DM000333495
IMUNOTEHNOMED S.R.L.	CUTTING EDGE S.A.S.	Franta	LENTILĂ INTRAOCULARĂ Synthesis Toric CYL+6.00 SPH+25.00 SIPT600+25.00	DM000333496

IMUNOTEHNOMED S.R.L.	CUTTING EDGE S.A.S.	Franta	LENTILĂ INTRAOCULARĂ Synthesis Toric CYL+0.75 SPH+25.50 SIPT075+25.50	DM000333497
IMUNOTEHNOMED S.R.L.	CUTTING EDGE S.A.S.	Franta	LENTILĂ INTRAOCULARĂ Synthesis Toric CYL+1.00 SPH+25.50 SIPT100+25.50	DM000333498
IMUNOTEHNOMED S.R.L.	CUTTING EDGE S.A.S.	Franta	LENTILĂ INTRAOCULARĂ Synthesis Toric CYL+1.50 SPH+25.50 SIPT150+25.50	DM000333499
IMUNOTEHNOMED S.R.L.	CUTTING EDGE S.A.S.	Franta	LENTILĂ INTRAOCULARĂ Synthesis Toric CYL+2.25 SPH+25.50 SIPT225+25.50	DM000333500
IMUNOTEHNOMED S.R.L.	CUTTING EDGE S.A.S.	Franta	LENTILĂ INTRAOCULARĂ Synthesis Toric CYL+3.00 SPH+25.50 SIPT300+25.50	DM000333501
IMUNOTEHNOMED S.R.L.	CUTTING EDGE S.A.S.	Franta	LENTILĂ INTRAOCULARĂ Synthesis Toric CYL+3.75 SPH+25.50 SIPT375+25.50	DM000333502
IMUNOTEHNOMED S.R.L.	CUTTING EDGE S.A.S.	Franta	LENTILĂ INTRAOCULARĂ Synthesis Toric CYL+4.50 SPH+25.50 SIPT450+25.50	DM000333503
IMUNOTEHNOMED S.R.L.	CUTTING EDGE S.A.S.	Franta	LENTILĂ INTRAOCULARĂ Synthesis Toric CYL+5.25 SPH+25.50 SIPT525+25.50	DM000333504
IMUNOTEHNOMED S.R.L.	CUTTING EDGE S.A.S.	Franta	LENTILĂ INTRAOCULARĂ Synthesis Toric CYL+6.00 SPH+25.50 SIPT600+25.50	DM000333505
IMUNOTEHNOMED S.R.L.	CUTTING EDGE S.A.S.	Franta	LENTILĂ INTRAOCULARĂ Synthesis Toric CYL+0.75 SPH+26.00 SIPT075+26.00	DM000333506
IMUNOTEHNOMED S.R.L.	CUTTING EDGE S.A.S.	Franta	LENTILĂ INTRAOCULARĂ Synthesis Toric CYL+1.00 SPH+26.00 SIPT100+26.00	DM000333507
IMUNOTEHNOMED S.R.L.	CUTTING EDGE S.A.S.	Franta	LENTILĂ INTRAOCULARĂ Synthesis Toric CYL+1.50 SPH+26.00 SIPT150+26.00	DM000333508
IMUNOTEHNOMED S.R.L.	CUTTING EDGE S.A.S.	Franta	LENTILĂ INTRAOCULARĂ Synthesis Toric CYL+2.25 SPH+26.00 SIPT225+26.00	DM000333509
IMUNOTEHNOMED S.R.L.	CUTTING EDGE S.A.S.	Franta	LENTILĂ INTRAOCULARĂ Synthesis Toric CYL+3.00 SPH+26.00 SIPT300+26.00	DM000333510
IMUNOTEHNOMED S.R.L.	CUTTING EDGE S.A.S.	Franta	LENTILĂ INTRAOCULARĂ Synthesis Toric CYL+3.75 SPH+26.00 SIPT375+26.00	DM000333511
IMUNOTEHNOMED S.R.L.	CUTTING EDGE S.A.S.	Franta	LENTILĂ INTRAOCULARĂ Synthesis Toric CYL+4.50 SPH+26.00 SIPT450+26.00	DM000333512
IMUNOTEHNOMED S.R.L.	CUTTING EDGE S.A.S.	Franta	LENTILĂ INTRAOCULARĂ Synthesis Toric CYL+5.25 SPH+26.00 SIPT525+26.00	DM000333513
IMUNOTEHNOMED S.R.L.	CUTTING EDGE S.A.S.	Franta	LENTILĂ INTRAOCULARĂ Synthesis Toric CYL+6.00 SPH+26.00 SIPT600+26.00	DM000333514
IMUNOTEHNOMED S.R.L.	CUTTING EDGE S.A.S.	Franta	LENTILĂ INTRAOCULARĂ Synthesis Toric CYL+0.75 SPH+26.50 SIPT075+26.50	DM000333515
IMUNOTEHNOMED S.R.L.	CUTTING EDGE S.A.S.	Franta	LENTILĂ INTRAOCULARĂ Synthesis Toric CYL+1.00 SPH+26.50 SIPT100+26.50	DM000333516
IMUNOTEHNOMED S.R.L.	CUTTING EDGE S.A.S.	Franta	LENTILĂ INTRAOCULARĂ Synthesis Toric CYL+1.50 SPH+26.50 SIPT150+26.50	DM000333517
IMUNOTEHNOMED S.R.L.	CUTTING EDGE S.A.S.	Franta	LENTILĂ INTRAOCULARĂ Synthesis Toric CYL+2.25 SPH+26.50 SIPT225+26.50	DM000333518
IMUNOTEHNOMED S.R.L.	CUTTING EDGE S.A.S.	Franta	LENTILĂ INTRAOCULARĂ Synthesis Toric CYL+3.00 SPH+26.50 SIPT300+26.50	DM000333519
IMUNOTEHNOMED S.R.L.	CUTTING EDGE S.A.S.	Franta	LENTILĂ INTRAOCULARĂ Synthesis Toric CYL+3.75 SPH+26.50 SIPT375+26.50	DM000333520
IMUNOTEHNOMED S.R.L.	CUTTING EDGE S.A.S.	Franta	LENTILĂ INTRAOCULARĂ Synthesis Toric CYL+4.50 SPH+26.50 SIPT450+26.50	DM000333521
IMUNOTEHNOMED S.R.L.	CUTTING EDGE S.A.S.	Franta	LENTILĂ INTRAOCULARĂ Synthesis Toric CYL+5.25 SPH+26.50 SIPT525+26.50	DM000333522
IMUNOTEHNOMED S.R.L.	CUTTING EDGE S.A.S.	Franta	LENTILĂ INTRAOCULARĂ Synthesis Toric CYL+6.00 SPH+26.50 SIPT600+26.50	DM000333523
IMUNOTEHNOMED S.R.L.	CUTTING EDGE S.A.S.	Franta	LENTILĂ INTRAOCULARĂ Synthesis Toric CYL+0.75 SPH+27.00 SIPT075+27.00	DM000333524
IMUNOTEHNOMED S.R.L.	CUTTING EDGE S.A.S.	Franta	LENTILĂ INTRAOCULARĂ Synthesis Toric CYL+1.00 SPH+27.00 SIPT100+27.00	DM000333525
IMUNOTEHNOMED S.R.L.	CUTTING EDGE S.A.S.	Franta	LENTILĂ INTRAOCULARĂ Synthesis Toric CYL+1.50 SPH+27.00 SIPT150+27.00	DM000333526
IMUNOTEHNOMED S.R.L.	CUTTING EDGE S.A.S.	Franta	LENTILĂ INTRAOCULARĂ Synthesis Toric CYL+2.25 SPH+27.00 SIPT225+27.00	DM000333527
IMUNOTEHNOMED S.R.L.	CUTTING EDGE S.A.S.	Franta	LENTILĂ INTRAOCULARĂ Synthesis Toric CYL+3.00 SPH+27.00 SIPT300+27.00	DM000333528
IMUNOTEHNOMED S.R.L.	CUTTING EDGE S.A.S.	Franta	LENTILĂ INTRAOCULARĂ Synthesis Toric CYL+3.75 SPH+27.00 SIPT375+27.00	DM000333529

IMUNOTEHNOMED S.R.L.	CUTTING EDGE S.A.S.	Franta	LENTILĂ INTRAOCULARĂ Synthesis Toric CYL+4.50 SPH+27.00 SIPT450+27.00	DM000333530
IMUNOTEHNOMED S.R.L.	CUTTING EDGE S.A.S.	Franta	LENTILĂ INTRAOCULARĂ Synthesis Toric CYL+5.25 SPH+27.00 SIPT525+27.00	DM000333531
IMUNOTEHNOMED S.R.L.	CUTTING EDGE S.A.S.	Franta	LENTILĂ INTRAOCULARĂ Synthesis Toric CYL+6.00 SPH+27.00 SIPT600+27.00	DM000333532
IMUNOTEHNOMED S.R.L.	CUTTING EDGE S.A.S.	Franta	LENTILĂ INTRAOCULARĂ Synthesis Toric CYL+0.75 SPH+27.50 SIPT075+27.50	DM000333533
IMUNOTEHNOMED S.R.L.	CUTTING EDGE S.A.S.	Franta	LENTILĂ INTRAOCULARĂ Synthesis Toric CYL+1.00 SPH+27.50 SIPT100+27.50	DM000333534
IMUNOTEHNOMED S.R.L.	CUTTING EDGE S.A.S.	Franta	LENTILĂ INTRAOCULARĂ Synthesis Toric CYL+1.50 SPH+27.50 SIPT150+27.50	DM000333535
IMUNOTEHNOMED S.R.L.	CUTTING EDGE S.A.S.	Franta	LENTILĂ INTRAOCULARĂ Synthesis Toric CYL+2.25 SPH+27.50 SIPT225+27.50	DM000333536
IMUNOTEHNOMED S.R.L.	CUTTING EDGE S.A.S.	Franta	LENTILĂ INTRAOCULARĂ Synthesis Toric CYL+3.00 SPH+27.50 SIPT300+27.50	DM000333537
IMUNOTEHNOMED S.R.L.	CUTTING EDGE S.A.S.	Franta	LENTILĂ INTRAOCULARĂ Synthesis Toric CYL+3.75 SPH+27.50 SIPT375+27.50	DM000333538
IMUNOTEHNOMED S.R.L.	CUTTING EDGE S.A.S.	Franta	LENTILĂ INTRAOCULARĂ Synthesis Toric CYL+4.50 SPH+27.50 SIPT450+27.50	DM000333539
IMUNOTEHNOMED S.R.L.	CUTTING EDGE S.A.S.	Franta	LENTILĂ INTRAOCULARĂ Synthesis Toric CYL+5.25 SPH+27.50 SIPT525+27.50	DM000333540
IMUNOTEHNOMED S.R.L.	CUTTING EDGE S.A.S.	Franta	LENTILĂ INTRAOCULARĂ Synthesis Toric CYL+6.00 SPH+27.50 SIPT600+27.50	DM000333541
IMUNOTEHNOMED S.R.L.	CUTTING EDGE S.A.S.	Franta	LENTILĂ INTRAOCULARĂ Synthesis Toric CYL+0.75 SPH+28.00 SIPT075+28.00	DM000333542
IMUNOTEHNOMED S.R.L.	CUTTING EDGE S.A.S.	Franta	LENTILĂ INTRAOCULARĂ Synthesis Toric CYL+1.00 SPH+28.00 SIPT100+28.00	DM000333543
IMUNOTEHNOMED S.R.L.	CUTTING EDGE S.A.S.	Franta	LENTILĂ INTRAOCULARĂ Synthesis Toric CYL+1.50 SPH+28.00 SIPT150+28.00	DM000333544
IMUNOTEHNOMED S.R.L.	CUTTING EDGE S.A.S.	Franta	LENTILĂ INTRAOCULARĂ Synthesis Toric CYL+2.25 SPH+28.00 SIPT225+28.00	DM000333545
IMUNOTEHNOMED S.R.L.	CUTTING EDGE S.A.S.	Franta	LENTILĂ INTRAOCULARĂ Synthesis Toric CYL+3.00 SPH+28.00 SIPT300+28.00	DM000333546
IMUNOTEHNOMED S.R.L.	CUTTING EDGE S.A.S.	Franta	LENTILĂ INTRAOCULARĂ Synthesis Toric CYL+3.75 SPH+28.00 SIPT375+28.00	DM000333547
IMUNOTEHNOMED S.R.L.	CUTTING EDGE S.A.S.	Franta	LENTILĂ INTRAOCULARĂ Synthesis Toric CYL+4.50 SPH+28.00 SIPT450+28.00	DM000333548
IMUNOTEHNOMED S.R.L.	CUTTING EDGE S.A.S.	Franta	LENTILĂ INTRAOCULARĂ Synthesis Toric CYL+5.25 SPH+28.00 SIPT525+28.00	DM000333549
IMUNOTEHNOMED S.R.L.	CUTTING EDGE S.A.S.	Franta	LENTILĂ INTRAOCULARĂ Synthesis Toric CYL+6.00 SPH+28.00 SIPT600+28.00	DM000333550
IMUNOTEHNOMED S.R.L.	CUTTING EDGE S.A.S.	Franta	LENTILĂ INTRAOCULARĂ Synthesis Toric CYL+0.75 SPH+28.50 SIPT075+28.50	DM000333551
IMUNOTEHNOMED S.R.L.	CUTTING EDGE S.A.S.	Franta	LENTILĂ INTRAOCULARĂ Synthesis Toric CYL+1.00 SPH+28.50 SIPT100+28.50	DM000333552
IMUNOTEHNOMED S.R.L.	CUTTING EDGE S.A.S.	Franta	LENTILĂ INTRAOCULARĂ Synthesis Toric CYL+1.50 SPH+28.50 SIPT150+28.50	DM000333553
IMUNOTEHNOMED S.R.L.	CUTTING EDGE S.A.S.	Franta	LENTILĂ INTRAOCULARĂ Synthesis Toric CYL+2.25 SPH+28.50 SIPT225+28.50	DM000333554
IMUNOTEHNOMED S.R.L.	CUTTING EDGE S.A.S.	Franta	LENTILĂ INTRAOCULARĂ Synthesis Toric CYL+3.00 SPH+28.50 SIPT300+28.50	DM000333555
IMUNOTEHNOMED S.R.L.	CUTTING EDGE S.A.S.	Franta	LENTILĂ INTRAOCULARĂ Synthesis Toric CYL+3.75 SPH+28.50 SIPT375+28.50	DM000333556
IMUNOTEHNOMED S.R.L.	CUTTING EDGE S.A.S.	Franta	LENTILĂ INTRAOCULARĂ Synthesis Toric CYL+4.50 SPH+28.50 SIPT450+28.50	DM000333557
IMUNOTEHNOMED S.R.L.	CUTTING EDGE S.A.S.	Franta	LENTILĂ INTRAOCULARĂ Synthesis Toric CYL+5.25 SPH+28.50 SIPT525+28.50	DM000333558
IMUNOTEHNOMED S.R.L.	CUTTING EDGE S.A.S.	Franta	LENTILĂ INTRAOCULARĂ Synthesis Toric CYL+6.00 SPH+28.50 SIPT600+28.50	DM000333559
IMUNOTEHNOMED S.R.L.	CUTTING EDGE S.A.S.	Franta	LENTILĂ INTRAOCULARĂ Synthesis Toric CYL+0.75 SPH+29.00 SIPT075+29.00	DM000333560
IMUNOTEHNOMED S.R.L.	CUTTING EDGE S.A.S.	Franta	LENTILĂ INTRAOCULARĂ Synthesis Toric CYL+1.00 SPH+29.00 SIPT100+29.00	DM000333561
IMUNOTEHNOMED S.R.L.	CUTTING EDGE S.A.S.	Franta	LENTILĂ INTRAOCULARĂ Synthesis Toric CYL+1.50 SPH+29.00 SIPT150+29.00	DM000333562

IMUNOTEHNOMED S.R.L.	CUTTING EDGE S.A.S.	Franta	LENTILĂ INTRAOCULARĂ Synthesis Toric CYL+2.25 SPH+29.00 SIPT225+29.00	DM000333563
IMUNOTEHNOMED S.R.L.	CUTTING EDGE S.A.S.	Franta	LENTILĂ INTRAOCULARĂ Synthesis Toric CYL+3.00 SPH+29.00 SIPT300+29.00	DM000333564
IMUNOTEHNOMED S.R.L.	CUTTING EDGE S.A.S.	Franta	LENTILĂ INTRAOCULARĂ Synthesis Toric CYL+3.75 SPH+29.00 SIPT375+29.00	DM000333565
IMUNOTEHNOMED S.R.L.	CUTTING EDGE S.A.S.	Franta	LENTILĂ INTRAOCULARĂ Synthesis Toric CYL+4.50 SPH+29.00 SIPT450+29.00	DM000333566
IMUNOTEHNOMED S.R.L.	CUTTING EDGE S.A.S.	Franta	LENTILĂ INTRAOCULARĂ Synthesis Toric CYL+5.25 SPH+29.00 SIPT525+29.00	DM000333567
IMUNOTEHNOMED S.R.L.	CUTTING EDGE S.A.S.	Franta	LENTILĂ INTRAOCULARĂ Synthesis Toric CYL+6.00 SPH+29.00 SIPT600+29.00	DM000333568
IMUNOTEHNOMED S.R.L.	CUTTING EDGE S.A.S.	Franta	LENTILĂ INTRAOCULARĂ Synthesis Toric CYL+0.75 SPH+29.50 SIPT075+29.50	DM000333569
IMUNOTEHNOMED S.R.L.	CUTTING EDGE S.A.S.	Franta	LENTILĂ INTRAOCULARĂ Synthesis Toric CYL+1.00 SPH+29.50 SIPT100+29.50	DM000333570
IMUNOTEHNOMED S.R.L.	CUTTING EDGE S.A.S.	Franta	LENTILĂ INTRAOCULARĂ Synthesis Toric CYL+1.50 SPH+29.50 SIPT150+29.50	DM000333571
IMUNOTEHNOMED S.R.L.	CUTTING EDGE S.A.S.	Franta	LENTILĂ INTRAOCULARĂ Synthesis Toric CYL+2.25 SPH+29.50 SIPT225+29.50	DM000333572
IMUNOTEHNOMED S.R.L.	CUTTING EDGE S.A.S.	Franta	LENTILĂ INTRAOCULARĂ Synthesis Toric CYL+3.00 SPH+29.50 SIPT300+29.50	DM000333573
IMUNOTEHNOMED S.R.L.	CUTTING EDGE S.A.S.	Franta	LENTILĂ INTRAOCULARĂ Synthesis Toric CYL+3.75 SPH+29.50 SIPT375+29.50	DM000333574
IMUNOTEHNOMED S.R.L.	CUTTING EDGE S.A.S.	Franta	LENTILĂ INTRAOCULARĂ Synthesis Toric CYL+4.50 SPH+29.50 SIPT450+29.50	DM000333575
IMUNOTEHNOMED S.R.L.	CUTTING EDGE S.A.S.	Franta	LENTILĂ INTRAOCULARĂ Synthesis Toric CYL+5.25 SPH+29.50 SIPT525+29.50	DM000333576
IMUNOTEHNOMED S.R.L.	CUTTING EDGE S.A.S.	Franta	LENTILĂ INTRAOCULARĂ Synthesis Toric CYL+6.00 SPH+29.50 SIPT600+29.50	DM000333577
IMUNOTEHNOMED S.R.L.	CUTTING EDGE S.A.S.	Franta	LENTILĂ INTRAOCULARĂ Synthesis Toric CYL+0.75 SPH+30.00 SIPT075+30.00	DM000333578
IMUNOTEHNOMED S.R.L.	CUTTING EDGE S.A.S.	Franta	LENTILĂ INTRAOCULARĂ Synthesis Toric CYL+1.00 SPH+30.00 SIPT100+30.00	DM000333579
IMUNOTEHNOMED S.R.L.	CUTTING EDGE S.A.S.	Franta	LENTILĂ INTRAOCULARĂ Synthesis Toric CYL+1.50 SPH+30.00 SIPT150+30.00	DM000333580
IMUNOTEHNOMED S.R.L.	CUTTING EDGE S.A.S.	Franta	LENTILĂ INTRAOCULARĂ Synthesis Toric CYL+2.25 SPH+30.00 SIPT225+30.00	DM000333581
IMUNOTEHNOMED S.R.L.	CUTTING EDGE S.A.S.	Franta	LENTILĂ INTRAOCULARĂ Synthesis Toric CYL+3.00 SPH+30.00 SIPT300+30.00	DM000333582
IMUNOTEHNOMED S.R.L.	CUTTING EDGE S.A.S.	Franta	LENTILĂ INTRAOCULARĂ Synthesis Toric CYL+3.75 SPH+30.00 SIPT375+30.00	DM000333583
IMUNOTEHNOMED S.R.L.	CUTTING EDGE S.A.S.	Franta	LENTILĂ INTRAOCULARĂ Synthesis Toric CYL+4.50 SPH+30.00 SIPT450+30.00	DM000333584
IMUNOTEHNOMED S.R.L.	CUTTING EDGE S.A.S.	Franta	LENTILĂ INTRAOCULARĂ Synthesis Toric CYL+5.25 SPH+30.00 SIPT525+30.00	DM000333585
IMUNOTEHNOMED S.R.L.	CUTTING EDGE S.A.S.	Franta	LENTILĂ INTRAOCULARĂ Synthesis Toric CYL+6.00 SPH+30.00 SIPT600+30.00	DM000333586
IMUNOTEHNOMED S.R.L.	CUTTING EDGE S.A.S.	Franta	LENTILĂ INTRAOCULARĂ Synthesis Toric CYL+0.75 SPH+31.00 SIPT075+31.00	DM000333587
IMUNOTEHNOMED S.R.L.	CUTTING EDGE S.A.S.	Franta	LENTILĂ INTRAOCULARĂ Synthesis Toric CYL+1.00 SPH+31.00 SIPT100+31.00	DM000333588
IMUNOTEHNOMED S.R.L.	CUTTING EDGE S.A.S.	Franta	LENTILĂ INTRAOCULARĂ Synthesis Toric CYL+1.50 SPH+31.00 SIPT150+31.00	DM000333589
IMUNOTEHNOMED S.R.L.	CUTTING EDGE S.A.S.	Franta	LENTILĂ INTRAOCULARĂ Synthesis Toric CYL+2.25 SPH+31.00 SIPT225+31.00	DM000333590
IMUNOTEHNOMED S.R.L.	CUTTING EDGE S.A.S.	Franta	LENTILĂ INTRAOCULARĂ Synthesis Toric CYL+3.00 SPH+31.00 SIPT300+31.00	DM000333591
IMUNOTEHNOMED S.R.L.	CUTTING EDGE S.A.S.	Franta	LENTILĂ INTRAOCULARĂ Synthesis Toric CYL+3.75 SPH+31.00 SIPT375+31.00	DM000333592
IMUNOTEHNOMED S.R.L.	CUTTING EDGE S.A.S.	Franta	LENTILĂ INTRAOCULARĂ Synthesis Toric CYL+4.50 SPH+31.00 SIPT450+31.00	DM000333593
IMUNOTEHNOMED S.R.L.	CUTTING EDGE S.A.S.	Franta	LENTILĂ INTRAOCULARĂ Synthesis Toric CYL+5.25 SPH+31.00 SIPT525+31.00	DM000333594
IMUNOTEHNOMED S.R.L.	CUTTING EDGE S.A.S.	Franta	LENTILĂ INTRAOCULARĂ Synthesis Toric CYL+6.00 SPH+31.00 SIPT600+31.00	DM000333595

IMUNOTEHNOMED S.R.L.	CUTTING EDGE S.A.S.	Franta	LENTILĂ INTRAOCULARĂ Synthesis Toric CYL+0.75 SPH+32.00 SIPT075+32.00	DM000333596
IMUNOTEHNOMED S.R.L.	CUTTING EDGE S.A.S.	Franta	LENTILĂ INTRAOCULARĂ Synthesis Toric CYL+1.00 SPH+32.00 SIPT100+32.00	DM000333597
IMUNOTEHNOMED S.R.L.	CUTTING EDGE S.A.S.	Franta	LENTILĂ INTRAOCULARĂ Synthesis Toric CYL+1.50 SPH+32.00 SIPT150+32.00	DM000333598
IMUNOTEHNOMED S.R.L.	CUTTING EDGE S.A.S.	Franta	LENTILĂ INTRAOCULARĂ Synthesis Toric CYL+2.25 SPH+32.00 SIPT225+32.00	DM000333599
IMUNOTEHNOMED S.R.L.	CUTTING EDGE S.A.S.	Franta	LENTILĂ INTRAOCULARĂ Synthesis Toric CYL+3.00 SPH+32.00 SIPT300+32.00	DM000333600
IMUNOTEHNOMED S.R.L.	CUTTING EDGE S.A.S.	Franta	LENTILĂ INTRAOCULARĂ Synthesis Toric CYL+3.75 SPH+32.00 SIPT375+32.00	DM000333601
IMUNOTEHNOMED S.R.L.	CUTTING EDGE S.A.S.	Franta	LENTILĂ INTRAOCULARĂ Synthesis Toric CYL+4.50 SPH+32.00 SIPT450+32.00	DM000333602
IMUNOTEHNOMED S.R.L.	CUTTING EDGE S.A.S.	Franta	LENTILĂ INTRAOCULARĂ Synthesis Toric CYL+5.25 SPH+32.00 SIPT525+32.00	DM000333603
IMUNOTEHNOMED S.R.L.	CUTTING EDGE S.A.S.	Franta	LENTILĂ INTRAOCULARĂ Synthesis Toric CYL+6.00 SPH+32.00 SIPT600+32.00	DM000333604
IMUNOTEHNOMED S.R.L.	CUTTING EDGE S.A.S.	Franta	LENTILĂ INTRAOCULARĂ Synthesis Toric CYL+0.75 SPH+5.00 SIPTY075+05.00	DM000333605
IMUNOTEHNOMED S.R.L.	CUTTING EDGE S.A.S.	Franta	LENTILĂ INTRAOCULARĂ Synthesis Toric CYL+1.00 SPH+5.00 SIPTY100+05.00	DM000333606
IMUNOTEHNOMED S.R.L.	CUTTING EDGE S.A.S.	Franta	LENTILĂ INTRAOCULARĂ Synthesis Toric CYL+1.50 SPH+5.00 SIPTY150+05.00	DM000333607
IMUNOTEHNOMED S.R.L.	CUTTING EDGE S.A.S.	Franta	LENTILĂ INTRAOCULARĂ Synthesis Toric CYL+2.25 SPH+5.00 SIPTY225+05.00	DM000333608
IMUNOTEHNOMED S.R.L.	CUTTING EDGE S.A.S.	Franta	LENTILĂ INTRAOCULARĂ Synthesis Toric CYL+3.00 SPH+5.00 SIPTY300+05.00	DM000333609
IMUNOTEHNOMED S.R.L.	CUTTING EDGE S.A.S.	Franta	LENTILĂ INTRAOCULARĂ Synthesis Toric CYL+3.75 SPH+5.00 SIPTY375+05.00	DM000333610
IMUNOTEHNOMED S.R.L.	CUTTING EDGE S.A.S.	Franta	LENTILĂ INTRAOCULARĂ Synthesis Toric CYL+4.50 SPH+5.00 SIPTY450+05.00	DM000333611
IMUNOTEHNOMED S.R.L.	CUTTING EDGE S.A.S.	Franta	LENTILĂ INTRAOCULARĂ Synthesis Toric CYL+5.25 SPH+5.00 SIPTY525+05.00	DM000333612
IMUNOTEHNOMED S.R.L.	CUTTING EDGE S.A.S.	Franta	LENTILĂ INTRAOCULARĂ Synthesis Toric CYL+6.00 SPH+5.00 SIPTY600+05.00	DM000333613
IMUNOTEHNOMED S.R.L.	CUTTING EDGE S.A.S.	Franta	LENTILĂ INTRAOCULARĂ Synthesis Toric CYL+0.75 SPH+6.00 SIPTY075+06.00	DM000333614
IMUNOTEHNOMED S.R.L.	CUTTING EDGE S.A.S.	Franta	LENTILĂ INTRAOCULARĂ Synthesis Toric CYL+1.00 SPH+6.00 SIPTY100+06.00	DM000333615
IMUNOTEHNOMED S.R.L.	CUTTING EDGE S.A.S.	Franta	LENTILĂ INTRAOCULARĂ Synthesis Toric CYL+1.50 SPH+6.00 SIPTY150+06.00	DM000333616
IMUNOTEHNOMED S.R.L.	CUTTING EDGE S.A.S.	Franta	LENTILĂ INTRAOCULARĂ Synthesis Toric CYL+2.25 SPH+6.00 SIPTY225+06.00	DM000333617
IMUNOTEHNOMED S.R.L.	CUTTING EDGE S.A.S.	Franta	LENTILĂ INTRAOCULARĂ Synthesis Toric CYL+3.00 SPH+6.00 SIPTY300+06.00	DM000333618
IMUNOTEHNOMED S.R.L.	CUTTING EDGE S.A.S.	Franta	LENTILĂ INTRAOCULARĂ Synthesis Toric CYL+3.75 SPH+6.00 SIPTY375+06.00	DM000333619
IMUNOTEHNOMED S.R.L.	CUTTING EDGE S.A.S.	Franta	LENTILĂ INTRAOCULARĂ Synthesis Toric CYL+4.50 SPH+6.00 SIPTY450+06.00	DM000333620
IMUNOTEHNOMED S.R.L.	CUTTING EDGE S.A.S.	Franta	LENTILĂ INTRAOCULARĂ Synthesis Toric CYL+5.25 SPH+6.00 SIPTY525+06.00	DM000333621
IMUNOTEHNOMED S.R.L.	CUTTING EDGE S.A.S.	Franta	LENTILĂ INTRAOCULARĂ Synthesis Toric CYL+6.00 SPH+6.00 SIPTY600+06.00	DM000333622
IMUNOTEHNOMED S.R.L.	CUTTING EDGE S.A.S.	Franta	LENTILĂ INTRAOCULARĂ Synthesis Toric CYL+0.75 SPH+7.00 SIPTY075+07.00	DM000333623
IMUNOTEHNOMED S.R.L.	CUTTING EDGE S.A.S.	Franta	LENTILĂ INTRAOCULARĂ Synthesis Toric CYL+1.00 SPH+7.00 SIPTY100+07.00	DM000333624
IMUNOTEHNOMED S.R.L.	CUTTING EDGE S.A.S.	Franta	LENTILĂ INTRAOCULARĂ Synthesis Toric CYL+1.50 SPH+7.00 SIPTY150+07.00	DM000333625
IMUNOTEHNOMED S.R.L.	CUTTING EDGE S.A.S.	Franta	LENTILĂ INTRAOCULARĂ Synthesis Toric CYL+2.25 SPH+7.00 SIPTY225+07.00	DM000333626
IMUNOTEHNOMED S.R.L.	CUTTING EDGE S.A.S.	Franta	LENTILĂ INTRAOCULARĂ Synthesis Toric CYL+3.00 SPH+7.00 SIPTY300+07.00	DM000333627
IMUNOTEHNOMED S.R.L.	CUTTING EDGE S.A.S.	Franta	LENTILĂ INTRAOCULARĂ Synthesis Toric CYL+3.75 SPH+7.00 SIPTY375+07.00	DM000333628

IMUNOTEHNOMED S.R.L.	CUTTING EDGE S.A.S.	Franta	LENTILĂ INTRAOCULARĂ Synthesis Toric CYL+4.50 SPH+7.00 SIPTY450+07.00	DM000333629
IMUNOTEHNOMED S.R.L.	CUTTING EDGE S.A.S.	Franta	LENTILĂ INTRAOCULARĂ Synthesis Toric CYL+5.25 SPH+7.00 SIPTY525+07.00	DM000333630
IMUNOTEHNOMED S.R.L.	CUTTING EDGE S.A.S.	Franta	LENTILĂ INTRAOCULARĂ Synthesis Toric CYL+6.00 SPH+7.00 SIPTY600+07.00	DM000333631
IMUNOTEHNOMED S.R.L.	CUTTING EDGE S.A.S.	Franta	LENTILĂ INTRAOCULARĂ Synthesis Toric CYL+0.75 SPH+8.00 SIPTY075+08.00	DM000333632
IMUNOTEHNOMED S.R.L.	CUTTING EDGE S.A.S.	Franta	LENTILĂ INTRAOCULARĂ Synthesis Toric CYL+1.00 SPH+8.00 SIPTY100+08.00	DM000333633
IMUNOTEHNOMED S.R.L.	CUTTING EDGE S.A.S.	Franta	LENTILĂ INTRAOCULARĂ Synthesis Toric CYL+1.50 SPH+8.00 SIPTY150+08.00	DM000333634
IMUNOTEHNOMED S.R.L.	CUTTING EDGE S.A.S.	Franta	LENTILĂ INTRAOCULARĂ Synthesis Toric CYL+2.25 SPH+8.00 SIPTY225+08.00	DM000333635
IMUNOTEHNOMED S.R.L.	CUTTING EDGE S.A.S.	Franta	LENTILĂ INTRAOCULARĂ Synthesis Toric CYL+3.00 SPH+8.00 SIPTY300+08.00	DM000333636
IMUNOTEHNOMED S.R.L.	CUTTING EDGE S.A.S.	Franta	LENTILĂ INTRAOCULARĂ Synthesis Toric CYL+3.75 SPH+8.00 SIPTY375+08.00	DM000333637
IMUNOTEHNOMED S.R.L.	CUTTING EDGE S.A.S.	Franta	LENTILĂ INTRAOCULARĂ Synthesis Toric CYL+4.50 SPH+8.00 SIPTY450+08.00	DM000333638
IMUNOTEHNOMED S.R.L.	CUTTING EDGE S.A.S.	Franta	LENTILĂ INTRAOCULARĂ Synthesis Toric CYL+5.25 SPH+8.00 SIPTY525+08.00	DM000333639
IMUNOTEHNOMED S.R.L.	CUTTING EDGE S.A.S.	Franta	LENTILĂ INTRAOCULARĂ Synthesis Toric CYL+6.00 SPH+8.00 SIPTY600+08.00	DM000333640
IMUNOTEHNOMED S.R.L.	CUTTING EDGE S.A.S.	Franta	LENTILĂ INTRAOCULARĂ Synthesis Toric CYL+0.75 SPH+9.00 SIPTY075+09.00	DM000333641
IMUNOTEHNOMED S.R.L.	CUTTING EDGE S.A.S.	Franta	LENTILĂ INTRAOCULARĂ Synthesis Toric CYL+1.00 SPH+9.00 SIPTY100+09.00	DM000333642
IMUNOTEHNOMED S.R.L.	CUTTING EDGE S.A.S.	Franta	LENTILĂ INTRAOCULARĂ Synthesis Toric CYL+1.50 SPH+9.00 SIPTY150+09.00	DM000333643
IMUNOTEHNOMED S.R.L.	CUTTING EDGE S.A.S.	Franta	LENTILĂ INTRAOCULARĂ Synthesis Toric CYL+2.25 SPH+9.00 SIPTY225+09.00	DM000333644
IMUNOTEHNOMED S.R.L.	CUTTING EDGE S.A.S.	Franta	LENTILĂ INTRAOCULARĂ Synthesis Toric CYL+3.00 SPH+9.00 SIPTY300+09.00	DM000333645
IMUNOTEHNOMED S.R.L.	CUTTING EDGE S.A.S.	Franta	LENTILĂ INTRAOCULARĂ Synthesis Toric CYL+3.75 SPH+9.00 SIPTY375+09.00	DM000333646
IMUNOTEHNOMED S.R.L.	CUTTING EDGE S.A.S.	Franta	LENTILĂ INTRAOCULARĂ Synthesis Toric CYL+4.50 SPH+9.00 SIPTY450+09.00	DM000333647
IMUNOTEHNOMED S.R.L.	CUTTING EDGE S.A.S.	Franta	LENTILĂ INTRAOCULARĂ Synthesis Toric CYL+5.25 SPH+9.00 SIPTY525+09.00	DM000333648
IMUNOTEHNOMED S.R.L.	CUTTING EDGE S.A.S.	Franta	LENTILĂ INTRAOCULARĂ Synthesis Toric CYL+6.00 SPH+9.00 SIPTY600+09.00	DM000333649
IMUNOTEHNOMED S.R.L.	CUTTING EDGE S.A.S.	Franta	LENTILĂ INTRAOCULARĂ Synthesis Toric CYL+0.75 SPH+10.00 SIPTY075+10.00	DM000333650
IMUNOTEHNOMED S.R.L.	CUTTING EDGE S.A.S.	Franta	LENTILĂ INTRAOCULARĂ Synthesis Toric CYL+1.00 SPH+10.00 SIPTY100+10.00	DM000333651
IMUNOTEHNOMED S.R.L.	CUTTING EDGE S.A.S.	Franta	LENTILĂ INTRAOCULARĂ Synthesis Toric CYL+1.50 SPH+10.00 SIPTY150+10.00	DM000333652
IMUNOTEHNOMED S.R.L.	CUTTING EDGE S.A.S.	Franta	LENTILĂ INTRAOCULARĂ Synthesis Toric CYL+2.25 SPH+10.00 SIPTY225+10.00	DM000333653
IMUNOTEHNOMED S.R.L.	CUTTING EDGE S.A.S.	Franta	LENTILĂ INTRAOCULARĂ Synthesis Toric CYL+3.00 SPH+10.00 SIPTY300+10.00	DM000333654
IMUNOTEHNOMED S.R.L.	CUTTING EDGE S.A.S.	Franta	LENTILĂ INTRAOCULARĂ Synthesis Toric CYL+3.75 SPH+10.00 SIPTY375+10.00	DM000333655
IMUNOTEHNOMED S.R.L.	CUTTING EDGE S.A.S.	Franta	LENTILĂ INTRAOCULARĂ Synthesis Toric CYL+4.50 SPH+10.00 SIPTY450+10.00	DM000333656
IMUNOTEHNOMED S.R.L.	CUTTING EDGE S.A.S.	Franta	LENTILĂ INTRAOCULARĂ Synthesis Toric CYL+5.25 SPH+10.00 SIPTY525+10.00	DM000333657
IMUNOTEHNOMED S.R.L.	CUTTING EDGE S.A.S.	Franta	LENTILĂ INTRAOCULARĂ Synthesis Toric CYL+6.00 SPH+10.00 SIPTY600+10.00	DM000333658
IMUNOTEHNOMED S.R.L.	CUTTING EDGE S.A.S.	Franta	LENTILĂ INTRAOCULARĂ Synthesis Toric CYL+0.75 SPH+10.50 SIPTY075+10.50	DM000333659
IMUNOTEHNOMED S.R.L.	CUTTING EDGE S.A.S.	Franta	LENTILĂ INTRAOCULARĂ Synthesis Toric CYL+1.00 SPH+10.50 SIPTY100+10.50	DM000333660
IMUNOTEHNOMED S.R.L.	CUTTING EDGE S.A.S.	Franta	LENTILĂ INTRAOCULARĂ Synthesis Toric CYL+1.50 SPH+10.50 SIPTY150+10.50	DM000333661

IMUNOTEHNOMED S.R.L.	CUTTING EDGE S.A.S.	Franta	LENTILĂ INTRAOCULARĂ Synthesis Toric CYL+2.25 SPH+10.50 SIPTY225+10.50	DM000333662
IMUNOTEHNOMED S.R.L.	CUTTING EDGE S.A.S.	Franta	LENTILĂ INTRAOCULARĂ Synthesis Toric CYL+3.00 SPH+10.50 SIPTY300+10.50	DM000333663
IMUNOTEHNOMED S.R.L.	CUTTING EDGE S.A.S.	Franta	LENTILĂ INTRAOCULARĂ Synthesis Toric CYL+3.75 SPH+10.50 SIPTY375+10.50	DM000333664
IMUNOTEHNOMED S.R.L.	CUTTING EDGE S.A.S.	Franta	LENTILĂ INTRAOCULARĂ Synthesis Toric CYL+4.50 SPH+10.50 SIPTY450+10.50	DM000333665
IMUNOTEHNOMED S.R.L.	CUTTING EDGE S.A.S.	Franta	LENTILĂ INTRAOCULARĂ Synthesis Toric CYL+5.25 SPH+10.50 SIPTY525+10.50	DM000333666
IMUNOTEHNOMED S.R.L.	CUTTING EDGE S.A.S.	Franta	LENTILĂ INTRAOCULARĂ Synthesis Toric CYL+6.00 SPH+10.50 SIPTY600+10.50	DM000333667
IMUNOTEHNOMED S.R.L.	CUTTING EDGE S.A.S.	Franta	LENTILĂ INTRAOCULARĂ Synthesis Toric CYL+0.75 SPH+11.00 SIPTY075+11.00	DM000333668
IMUNOTEHNOMED S.R.L.	CUTTING EDGE S.A.S.	Franta	LENTILĂ INTRAOCULARĂ Synthesis Toric CYL+1.00 SPH+11.00 SIPTY100+11.00	DM000333669
IMUNOTEHNOMED S.R.L.	CUTTING EDGE S.A.S.	Franta	LENTILĂ INTRAOCULARĂ Synthesis Toric CYL+1.50 SPH+11.00 SIPTY150+11.00	DM000333670
IMUNOTEHNOMED S.R.L.	CUTTING EDGE S.A.S.	Franta	LENTILĂ INTRAOCULARĂ Synthesis Toric CYL+2.25 SPH+11.00 SIPTY225+11.00	DM000333671
IMUNOTEHNOMED S.R.L.	CUTTING EDGE S.A.S.	Franta	LENTILĂ INTRAOCULARĂ Synthesis Toric CYL+3.00 SPH+11.00 SIPTY300+11.00	DM000333672
IMUNOTEHNOMED S.R.L.	CUTTING EDGE S.A.S.	Franta	LENTILĂ INTRAOCULARĂ Synthesis Toric CYL+3.75 SPH+11.00 SIPTY375+11.00	DM000333673
IMUNOTEHNOMED S.R.L.	CUTTING EDGE S.A.S.	Franta	LENTILĂ INTRAOCULARĂ Synthesis Toric CYL+4.50 SPH+11.00 SIPTY450+11.00	DM000333674
IMUNOTEHNOMED S.R.L.	CUTTING EDGE S.A.S.	Franta	LENTILĂ INTRAOCULARĂ Synthesis Toric CYL+5.25 SPH+11.00 SIPTY525+11.00	DM000333675
IMUNOTEHNOMED S.R.L.	CUTTING EDGE S.A.S.	Franta	LENTILĂ INTRAOCULARĂ Synthesis Toric CYL+6.00 SPH+11.00 SIPTY600+11.00	DM000333676
IMUNOTEHNOMED S.R.L.	CUTTING EDGE S.A.S.	Franta	LENTILĂ INTRAOCULARĂ Synthesis Toric CYL+0.75 SPH+11.50 SIPTY075+11.50	DM000333677
IMUNOTEHNOMED S.R.L.	CUTTING EDGE S.A.S.	Franta	LENTILĂ INTRAOCULARĂ Synthesis Toric CYL+1.00 SPH+11.50 SIPTY100+11.50	DM000333678
IMUNOTEHNOMED S.R.L.	CUTTING EDGE S.A.S.	Franta	LENTILĂ INTRAOCULARĂ Synthesis Toric CYL+1.50 SPH+11.50 SIPTY150+11.50	DM000333679
IMUNOTEHNOMED S.R.L.	CUTTING EDGE S.A.S.	Franta	LENTILĂ INTRAOCULARĂ Synthesis Toric CYL+2.25 SPH+11.50 SIPTY225+11.50	DM000333680
IMUNOTEHNOMED S.R.L.	CUTTING EDGE S.A.S.	Franta	LENTILĂ INTRAOCULARĂ Synthesis Toric CYL+3.00 SPH+11.50 SIPTY300+11.50	DM000333681
IMUNOTEHNOMED S.R.L.	CUTTING EDGE S.A.S.	Franta	LENTILĂ INTRAOCULARĂ Synthesis Toric CYL+3.75 SPH+11.50 SIPTY375+11.50	DM000333682
IMUNOTEHNOMED S.R.L.	CUTTING EDGE S.A.S.	Franta	LENTILĂ INTRAOCULARĂ Synthesis Toric CYL+4.50 SPH+11.50 SIPTY450+11.50	DM000333683
IMUNOTEHNOMED S.R.L.	CUTTING EDGE S.A.S.	Franta	LENTILĂ INTRAOCULARĂ Synthesis Toric CYL+5.25 SPH+11.50 SIPTY525+11.50	DM000333684
IMUNOTEHNOMED S.R.L.	CUTTING EDGE S.A.S.	Franta	LENTILĂ INTRAOCULARĂ Synthesis Toric CYL+6.00 SPH+11.50 SIPTY600+11.50	DM000333685
IMUNOTEHNOMED S.R.L.	CUTTING EDGE S.A.S.	Franta	LENTILĂ INTRAOCULARĂ Synthesis Toric CYL+0.75 SPH+12.00 SIPTY075+12.00	DM000333686
IMUNOTEHNOMED S.R.L.	CUTTING EDGE S.A.S.	Franta	LENTILĂ INTRAOCULARĂ Synthesis Toric CYL+1.00 SPH+12.00 SIPTY100+12.00	DM000333687
IMUNOTEHNOMED S.R.L.	CUTTING EDGE S.A.S.	Franta	LENTILĂ INTRAOCULARĂ Synthesis Toric CYL+1.50 SPH+12.00 SIPTY150+12.00	DM000333688
IMUNOTEHNOMED S.R.L.	CUTTING EDGE S.A.S.	Franta	LENTILĂ INTRAOCULARĂ Synthesis Toric CYL+2.25 SPH+12.00 SIPTY225+12.00	DM000333689
IMUNOTEHNOMED S.R.L.	CUTTING EDGE S.A.S.	Franta	LENTILĂ INTRAOCULARĂ Synthesis Toric CYL+3.00 SPH+12.00 SIPTY300+12.00	DM000333690
IMUNOTEHNOMED S.R.L.	CUTTING EDGE S.A.S.	Franta	LENTILĂ INTRAOCULARĂ Synthesis Toric CYL+3.75 SPH+12.00 SIPTY375+12.00	DM000333691
IMUNOTEHNOMED S.R.L.	CUTTING EDGE S.A.S.	Franta	LENTILĂ INTRAOCULARĂ Synthesis Toric CYL+4.50 SPH+12.00 SIPTY450+12.00	DM000333692
IMUNOTEHNOMED S.R.L.	CUTTING EDGE S.A.S.	Franta	LENTILĂ INTRAOCULARĂ Synthesis Toric CYL+5.25 SPH+12.00 SIPTY525+12.00	DM000333693
IMUNOTEHNOMED S.R.L.	CUTTING EDGE S.A.S.	Franta	LENTILĂ INTRAOCULARĂ Synthesis Toric CYL+6.00 SPH+12.00 SIPTY600+12.00	DM000333694

IMUNOTEHNOMED S.R.L.	CUTTING EDGE S.A.S.	Franta	LENTILĂ INTRAOCULARĂ Synthesis Toric CYL+0.75 SPH+12.50 SIPTY075+12.50	DM000333695
IMUNOTEHNOMED S.R.L.	CUTTING EDGE S.A.S.	Franta	LENTILĂ INTRAOCULARĂ Synthesis Toric CYL+1.00 SPH+12.50 SIPTY100+12.50	DM000333696
IMUNOTEHNOMED S.R.L.	CUTTING EDGE S.A.S.	Franta	LENTILĂ INTRAOCULARĂ Synthesis Toric CYL+1.50 SPH+12.50 SIPTY150+12.50	DM000333697
IMUNOTEHNOMED S.R.L.	CUTTING EDGE S.A.S.	Franta	LENTILĂ INTRAOCULARĂ Synthesis Toric CYL+2.25 SPH+12.50 SIPTY225+12.50	DM000333698
IMUNOTEHNOMED S.R.L.	CUTTING EDGE S.A.S.	Franta	LENTILĂ INTRAOCULARĂ Synthesis Toric CYL+3.00 SPH+12.50 SIPTY300+12.50	DM000333699
IMUNOTEHNOMED S.R.L.	CUTTING EDGE S.A.S.	Franta	LENTILĂ INTRAOCULARĂ Synthesis Toric CYL+3.75 SPH+12.50 SIPTY375+12.50	DM000333700
IMUNOTEHNOMED S.R.L.	CUTTING EDGE S.A.S.	Franta	LENTILĂ INTRAOCULARĂ Synthesis Toric CYL+4.50 SPH+12.50 SIPTY450+12.50	DM000333701
IMUNOTEHNOMED S.R.L.	CUTTING EDGE S.A.S.	Franta	LENTILĂ INTRAOCULARĂ Synthesis Toric CYL+5.25 SPH+12.50 SIPTY525+12.50	DM000333702
IMUNOTEHNOMED S.R.L.	CUTTING EDGE S.A.S.	Franta	LENTILĂ INTRAOCULARĂ Synthesis Toric CYL+6.00 SPH+12.50 SIPTY600+12.50	DM000333703
IMUNOTEHNOMED S.R.L.	CUTTING EDGE S.A.S.	Franta	LENTILĂ INTRAOCULARĂ Synthesis Toric CYL+0.75 SPH+13.00 SIPTY075+13.00	DM000333704
IMUNOTEHNOMED S.R.L.	CUTTING EDGE S.A.S.	Franta	LENTILĂ INTRAOCULARĂ Synthesis Toric CYL+1.00 SPH+13.00 SIPTY100+13.00	DM000333705
IMUNOTEHNOMED S.R.L.	CUTTING EDGE S.A.S.	Franta	LENTILĂ INTRAOCULARĂ Synthesis Toric CYL+1.50 SPH+13.00 SIPTY150+13.00	DM000333706
IMUNOTEHNOMED S.R.L.	CUTTING EDGE S.A.S.	Franta	LENTILĂ INTRAOCULARĂ Synthesis Toric CYL+2.25 SPH+13.00 SIPTY225+13.00	DM000333707
IMUNOTEHNOMED S.R.L.	CUTTING EDGE S.A.S.	Franta	LENTILĂ INTRAOCULARĂ Synthesis Toric CYL+3.00 SPH+13.00 SIPTY300+13.00	DM000333708
IMUNOTEHNOMED S.R.L.	CUTTING EDGE S.A.S.	Franta	LENTILĂ INTRAOCULARĂ Synthesis Toric CYL+3.75 SPH+13.00 SIPTY375+13.00	DM000333709
IMUNOTEHNOMED S.R.L.	CUTTING EDGE S.A.S.	Franta	LENTILĂ INTRAOCULARĂ Synthesis Toric CYL+4.50 SPH+13.00 SIPTY450+13.00	DM000333710
IMUNOTEHNOMED S.R.L.	CUTTING EDGE S.A.S.	Franta	LENTILĂ INTRAOCULARĂ Synthesis Toric CYL+5.25 SPH+13.00 SIPTY525+13.00	DM000333711
IMUNOTEHNOMED S.R.L.	CUTTING EDGE S.A.S.	Franta	LENTILĂ INTRAOCULARĂ Synthesis Toric CYL+6.00 SPH+13.00 SIPTY600+13.00	DM000333712
IMUNOTEHNOMED S.R.L.	CUTTING EDGE S.A.S.	Franta	LENTILĂ INTRAOCULARĂ Synthesis Toric CYL+0.75 SPH+13.50 SIPTY075+13.50	DM000333713
IMUNOTEHNOMED S.R.L.	CUTTING EDGE S.A.S.	Franta	LENTILĂ INTRAOCULARĂ Synthesis Toric CYL+1.00 SPH+13.50 SIPTY100+13.50	DM000333714
IMUNOTEHNOMED S.R.L.	CUTTING EDGE S.A.S.	Franta	LENTILĂ INTRAOCULARĂ Synthesis Toric CYL+1.50 SPH+13.50 SIPTY150+13.50	DM000333715
IMUNOTEHNOMED S.R.L.	CUTTING EDGE S.A.S.	Franta	LENTILĂ INTRAOCULARĂ Synthesis Toric CYL+2.25 SPH+13.50 SIPTY225+13.50	DM000333716
IMUNOTEHNOMED S.R.L.	CUTTING EDGE S.A.S.	Franta	LENTILĂ INTRAOCULARĂ Synthesis Toric CYL+3.00 SPH+13.50 SIPTY300+13.50	DM000333717
IMUNOTEHNOMED S.R.L.	CUTTING EDGE S.A.S.	Franta	LENTILĂ INTRAOCULARĂ Synthesis Toric CYL+3.75 SPH+13.50 SIPTY375+13.50	DM000333718
IMUNOTEHNOMED S.R.L.	CUTTING EDGE S.A.S.	Franta	LENTILĂ INTRAOCULARĂ Synthesis Toric CYL+4.50 SPH+13.50 SIPTY450+13.50	DM000333719
IMUNOTEHNOMED S.R.L.	CUTTING EDGE S.A.S.	Franta	LENTILĂ INTRAOCULARĂ Synthesis Toric CYL+5.25 SPH+13.50 SIPTY525+13.50	DM000333720
IMUNOTEHNOMED S.R.L.	CUTTING EDGE S.A.S.	Franta	LENTILĂ INTRAOCULARĂ Synthesis Toric CYL+6.00 SPH+13.50 SIPTY600+13.50	DM000333721
IMUNOTEHNOMED S.R.L.	CUTTING EDGE S.A.S.	Franta	LENTILĂ INTRAOCULARĂ Synthesis Toric CYL+0.75 SPH+14.00 SIPTY075+14.00	DM000333722
IMUNOTEHNOMED S.R.L.	CUTTING EDGE S.A.S.	Franta	LENTILĂ INTRAOCULARĂ Synthesis Toric CYL+1.00 SPH+14.00 SIPTY100+14.00	DM000333723
IMUNOTEHNOMED S.R.L.	CUTTING EDGE S.A.S.	Franta	LENTILĂ INTRAOCULARĂ Synthesis Toric CYL+1.50 SPH+14.00 SIPTY150+14.00	DM000333724
IMUNOTEHNOMED S.R.L.	CUTTING EDGE S.A.S.	Franta	LENTILĂ INTRAOCULARĂ Synthesis Toric CYL+2.25 SPH+14.00 SIPTY225+14.00	DM000333725
IMUNOTEHNOMED S.R.L.	CUTTING EDGE S.A.S.	Franta	LENTILĂ INTRAOCULARĂ Synthesis Toric CYL+3.00 SPH+14.00 SIPTY300+14.00	DM000333726
IMUNOTEHNOMED S.R.L.	CUTTING EDGE S.A.S.	Franta	LENTILĂ INTRAOCULARĂ Synthesis Toric CYL+3.75 SPH+14.00 SIPTY375+14.00	DM000333727

IMUNOTEHNOMED S.R.L.	CUTTING EDGE S.A.S.	Franta	LENTILĂ INTRAOCULARĂ Synthesis Toric CYL+4.50 SPH+14.00 SIPTY450+14.00	DM000333728
IMUNOTEHNOMED S.R.L.	CUTTING EDGE S.A.S.	Franta	LENTILĂ INTRAOCULARĂ Synthesis Toric CYL+5.25 SPH+14.00 SIPTY525+14.00	DM000333729
IMUNOTEHNOMED S.R.L.	CUTTING EDGE S.A.S.	Franta	LENTILĂ INTRAOCULARĂ Synthesis Toric CYL+6.00 SPH+14.00 SIPTY600+14.00	DM000333730
IMUNOTEHNOMED S.R.L.	CUTTING EDGE S.A.S.	Franta	LENTILĂ INTRAOCULARĂ Synthesis Toric CYL+0.75 SPH+14.50 SIPTY075+14.50	DM000333731
IMUNOTEHNOMED S.R.L.	CUTTING EDGE S.A.S.	Franta	LENTILĂ INTRAOCULARĂ Synthesis Toric CYL+1.00 SPH+14.50 SIPTY100+14.50	DM000333732
IMUNOTEHNOMED S.R.L.	CUTTING EDGE S.A.S.	Franta	LENTILĂ INTRAOCULARĂ Synthesis Toric CYL+1.50 SPH+14.50 SIPTY150+14.50	DM000333733
IMUNOTEHNOMED S.R.L.	CUTTING EDGE S.A.S.	Franta	LENTILĂ INTRAOCULARĂ Synthesis Toric CYL+2.25 SPH+14.50 SIPTY225+14.50	DM000333734
IMUNOTEHNOMED S.R.L.	CUTTING EDGE S.A.S.	Franta	LENTILĂ INTRAOCULARĂ Synthesis Toric CYL+3.00 SPH+14.50 SIPTY300+14.50	DM000333735
IMUNOTEHNOMED S.R.L.	CUTTING EDGE S.A.S.	Franta	LENTILĂ INTRAOCULARĂ Synthesis Toric CYL+3.75 SPH+14.50 SIPTY375+14.50	DM000333736
IMUNOTEHNOMED S.R.L.	CUTTING EDGE S.A.S.	Franta	LENTILĂ INTRAOCULARĂ Synthesis Toric CYL+4.50 SPH+14.50 SIPTY450+14.50	DM000333737
IMUNOTEHNOMED S.R.L.	CUTTING EDGE S.A.S.	Franta	LENTILĂ INTRAOCULARĂ Synthesis Toric CYL+5.25 SPH+14.50 SIPTY525+14.50	DM000333738
IMUNOTEHNOMED S.R.L.	CUTTING EDGE S.A.S.	Franta	LENTILĂ INTRAOCULARĂ Synthesis Toric CYL+6.00 SPH+14.50 SIPTY600+14.50	DM000333739
IMUNOTEHNOMED S.R.L.	CUTTING EDGE S.A.S.	Franta	LENTILĂ INTRAOCULARĂ Synthesis Toric CYL+0.75 SPH+15.00 SIPTY075+15.00	DM000333740
IMUNOTEHNOMED S.R.L.	CUTTING EDGE S.A.S.	Franta	LENTILĂ INTRAOCULARĂ Synthesis Toric CYL+1.00 SPH+15.00 SIPTY100+15.00	DM000333741
IMUNOTEHNOMED S.R.L.	CUTTING EDGE S.A.S.	Franta	LENTILĂ INTRAOCULARĂ Synthesis Toric CYL+1.50 SPH+15.00 SIPTY150+15.00	DM000333742
IMUNOTEHNOMED S.R.L.	CUTTING EDGE S.A.S.	Franta	LENTILĂ INTRAOCULARĂ Synthesis Toric CYL+2.25 SPH+15.00 SIPTY225+15.00	DM000333743
IMUNOTEHNOMED S.R.L.	CUTTING EDGE S.A.S.	Franta	LENTILĂ INTRAOCULARĂ Synthesis Toric CYL+3.00 SPH+15.00 SIPTY300+15.00	DM000333744
IMUNOTEHNOMED S.R.L.	CUTTING EDGE S.A.S.	Franta	LENTILĂ INTRAOCULARĂ Synthesis Toric CYL+3.75 SPH+15.00 SIPTY375+15.00	DM000333745
IMUNOTEHNOMED S.R.L.	CUTTING EDGE S.A.S.	Franta	LENTILĂ INTRAOCULARĂ Synthesis Toric CYL+4.50 SPH+15.00 SIPTY450+15.00	DM000333746
IMUNOTEHNOMED S.R.L.	CUTTING EDGE S.A.S.	Franta	LENTILĂ INTRAOCULARĂ Synthesis Toric CYL+5.25 SPH+15.00 SIPTY525+15.00	DM000333747
IMUNOTEHNOMED S.R.L.	CUTTING EDGE S.A.S.	Franta	LENTILĂ INTRAOCULARĂ Synthesis Toric CYL+6.00 SPH+15.00 SIPTY600+15.00	DM000333748
IMUNOTEHNOMED S.R.L.	CUTTING EDGE S.A.S.	Franta	LENTILĂ INTRAOCULARĂ Synthesis Toric CYL+0.75 SPH+15.50 SIPTY075+15.50	DM000333749
IMUNOTEHNOMED S.R.L.	CUTTING EDGE S.A.S.	Franta	LENTILĂ INTRAOCULARĂ Synthesis Toric CYL+1.00 SPH+15.50 SIPTY100+15.50	DM000333750
IMUNOTEHNOMED S.R.L.	CUTTING EDGE S.A.S.	Franta	LENTILĂ INTRAOCULARĂ Synthesis Toric CYL+1.50 SPH+15.50 SIPTY150+15.50	DM000333751
IMUNOTEHNOMED S.R.L.	CUTTING EDGE S.A.S.	Franta	LENTILĂ INTRAOCULARĂ Synthesis Toric CYL+2.25 SPH+15.50 SIPTY225+15.50	DM000333752
IMUNOTEHNOMED S.R.L.	CUTTING EDGE S.A.S.	Franta	LENTILĂ INTRAOCULARĂ Synthesis Toric CYL+3.00 SPH+15.50 SIPTY300+15.50	DM000333753
IMUNOTEHNOMED S.R.L.	CUTTING EDGE S.A.S.	Franta	LENTILĂ INTRAOCULARĂ Synthesis Toric CYL+3.75 SPH+15.50 SIPYT375+15.50	DM000333754
IMUNOTEHNOMED S.R.L.	CUTTING EDGE S.A.S.	Franta	LENTILĂ INTRAOCULARĂ Synthesis Toric CYL+4.50 SPH+15.50 SIPYT450+15.50	DM000333755
IMUNOTEHNOMED S.R.L.	CUTTING EDGE S.A.S.	Franta	LENTILĂ INTRAOCULARĂ Synthesis Toric CYL+5.25 SPH+15.50 SIPTY525+15.50	DM000333756
IMUNOTEHNOMED S.R.L.	CUTTING EDGE S.A.S.	Franta	LENTILĂ INTRAOCULARĂ Synthesis Toric CYL+6.00 SPH+15.50 SIPTY600+15.50	DM000333757
IMUNOTEHNOMED S.R.L.	CUTTING EDGE S.A.S.	Franta	LENTILĂ INTRAOCULARĂ Synthesis Toric CYL+0.75 SPH+16.00 SIPTY075+16.00	DM000333758
IMUNOTEHNOMED S.R.L.	CUTTING EDGE S.A.S.	Franta	LENTILĂ INTRAOCULARĂ Synthesis Toric CYL+1.00 SPH+16.00 SIPTY100+16.00	DM000333759
IMUNOTEHNOMED S.R.L.	CUTTING EDGE S.A.S.	Franta	LENTILĂ INTRAOCULARĂ Synthesis Toric CYL+1.50 SPH+16.00 SIPTY150+16.00	DM000333760

IMUNOTEHNOMED S.R.L.	CUTTING EDGE S.A.S.	Franta	LENTILĂ INTRAOCULARĂ Synthesis Toric CYL+2.25 SPH+16.00 SIPTY225+16.00	DM000333761
IMUNOTEHNOMED S.R.L.	CUTTING EDGE S.A.S.	Franta	LENTILĂ INTRAOCULARĂ Synthesis Toric CYL+3.00 SPH+16.00 SIPTY300+16.00	DM000333762
IMUNOTEHNOMED S.R.L.	CUTTING EDGE S.A.S.	Franta	LENTILĂ INTRAOCULARĂ Synthesis Toric CYL+3.75 SPH+16.00 SIPTY375+16.00	DM000333763
IMUNOTEHNOMED S.R.L.	CUTTING EDGE S.A.S.	Franta	LENTILĂ INTRAOCULARĂ Synthesis Toric CYL+4.50 SPH+16.00 SIPTY450+16.00	DM000333764
IMUNOTEHNOMED S.R.L.	CUTTING EDGE S.A.S.	Franta	LENTILĂ INTRAOCULARĂ Synthesis Toric CYL+5.25 SPH+16.00 SIPTY525+16.00	DM000333765
IMUNOTEHNOMED S.R.L.	CUTTING EDGE S.A.S.	Franta	LENTILĂ INTRAOCULARĂ Synthesis Toric CYL+6.00 SPH+16.00 SIPTY600+16.00	DM000333766
IMUNOTEHNOMED S.R.L.	CUTTING EDGE S.A.S.	Franta	LENTILĂ INTRAOCULARĂ Synthesis Toric CYL+0.75 SPH+16.50 SIPTY075+16.50	DM000333767
IMUNOTEHNOMED S.R.L.	CUTTING EDGE S.A.S.	Franta	LENTILĂ INTRAOCULARĂ Synthesis Toric CYL+1.00 SPH+16.50 SIPTY100+16.50	DM000333768
IMUNOTEHNOMED S.R.L.	CUTTING EDGE S.A.S.	Franta	LENTILĂ INTRAOCULARĂ Synthesis Toric CYL+1.50 SPH+16.50 SIPTY150+16.50	DM000333769
IMUNOTEHNOMED S.R.L.	CUTTING EDGE S.A.S.	Franta	LENTILĂ INTRAOCULARĂ Synthesis Toric CYL+2.25 SPH+16.50 SIPTY225+16.50	DM000333770
IMUNOTEHNOMED S.R.L.	CUTTING EDGE S.A.S.	Franta	LENTILĂ INTRAOCULARĂ Synthesis Toric CYL+3.00 SPH+16.50 SIPTY300+16.50	DM000333771
IMUNOTEHNOMED S.R.L.	CUTTING EDGE S.A.S.	Franta	LENTILĂ INTRAOCULARĂ Synthesis Toric CYL+3.75 SPH+16.50 SIPTY375+16.50	DM000333772
IMUNOTEHNOMED S.R.L.	CUTTING EDGE S.A.S.	Franta	LENTILĂ INTRAOCULARĂ Synthesis Toric CYL+4.50 SPH+16.50 SIPTY450+16.50	DM000333773
IMUNOTEHNOMED S.R.L.	CUTTING EDGE S.A.S.	Franta	LENTILĂ INTRAOCULARĂ Synthesis Toric CYL+5.25 SPH+16.50 SIPTY525+16.50	DM000333774
IMUNOTEHNOMED S.R.L.	CUTTING EDGE S.A.S.	Franta	LENTILĂ INTRAOCULARĂ Synthesis Toric CYL+6.00 SPH+16.50 SIPTY600+16.50	DM000333775
IMUNOTEHNOMED S.R.L.	CUTTING EDGE S.A.S.	Franta	LENTILĂ INTRAOCULARĂ Synthesis Toric CYL+0.75 SPH+17.00 SIPTY075+17.00	DM000333776
IMUNOTEHNOMED S.R.L.	CUTTING EDGE S.A.S.	Franta	LENTILĂ INTRAOCULARĂ Synthesis Toric CYL+1.00 SPH+17.00 SIPTY100+17.00	DM000333777
IMUNOTEHNOMED S.R.L.	CUTTING EDGE S.A.S.	Franta	LENTILĂ INTRAOCULARĂ Synthesis Toric CYL+1.50 SPH+17.00 SIPTY150+17.00	DM000333778
IMUNOTEHNOMED S.R.L.	CUTTING EDGE S.A.S.	Franta	LENTILĂ INTRAOCULARĂ Synthesis Toric CYL+2.25 SPH+17.00 SIPTY225+17.00	DM000333779
IMUNOTEHNOMED S.R.L.	CUTTING EDGE S.A.S.	Franta	LENTILĂ INTRAOCULARĂ Synthesis Toric CYL+3.00 SPH+17.00 SIPTY300+17.00	DM000333780
IMUNOTEHNOMED S.R.L.	CUTTING EDGE S.A.S.	Franta	LENTILĂ INTRAOCULARĂ Synthesis Toric CYL+3.75 SPH+17.00 SIPTY375+17.00	DM000333781
IMUNOTEHNOMED S.R.L.	CUTTING EDGE S.A.S.	Franta	LENTILĂ INTRAOCULARĂ Synthesis Toric CYL+4.50 SPH+17.00 SIPTY450+17.00	DM000333782
IMUNOTEHNOMED S.R.L.	CUTTING EDGE S.A.S.	Franta	LENTILĂ INTRAOCULARĂ Synthesis Toric CYL+5.25 SPH+17.00 SIPTY525+17.00	DM000333783
IMUNOTEHNOMED S.R.L.	CUTTING EDGE S.A.S.	Franta	LENTILĂ INTRAOCULARĂ Synthesis Toric CYL+6.00 SPH+17.00 SIPTY600+17.00	DM000333784
IMUNOTEHNOMED S.R.L.	CUTTING EDGE S.A.S.	Franta	LENTILĂ INTRAOCULARĂ Synthesis Toric CYL+0.75 SPH+17.50 SIPTY075+17.50	DM000333785
IMUNOTEHNOMED S.R.L.	CUTTING EDGE S.A.S.	Franta	LENTILĂ INTRAOCULARĂ Synthesis Toric CYL+1.00 SPH+17.50 SIPTY100+17.50	DM000333786
IMUNOTEHNOMED S.R.L.	CUTTING EDGE S.A.S.	Franta	LENTILĂ INTRAOCULARĂ Synthesis Toric CYL+1.50 SPH+17.50 SIPTY150+17.50	DM000333787
IMUNOTEHNOMED S.R.L.	CUTTING EDGE S.A.S.	Franta	LENTILĂ INTRAOCULARĂ Synthesis Toric CYL+2.25 SPH+17.50 SIPTY225+17.50	DM000333788
IMUNOTEHNOMED S.R.L.	CUTTING EDGE S.A.S.	Franta	LENTILĂ INTRAOCULARĂ Synthesis Toric CYL+3.00 SPH+17.50 SIPTY300+17.50	DM000333789
IMUNOTEHNOMED S.R.L.	CUTTING EDGE S.A.S.	Franta	LENTILĂ INTRAOCULARĂ Synthesis Toric CYL+3.75 SPH+17.50 SIPTY375+17.50	DM000333790
IMUNOTEHNOMED S.R.L.	CUTTING EDGE S.A.S.	Franta	LENTILĂ INTRAOCULARĂ Synthesis Toric CYL+4.50 SPH+17.50 SIPTY450+17.50	DM000333791
IMUNOTEHNOMED S.R.L.	CUTTING EDGE S.A.S.	Franta	LENTILĂ INTRAOCULARĂ Synthesis Toric CYL+5.25 SPH+17.50 SIPTY525+17.50	DM000333792
IMUNOTEHNOMED S.R.L.	CUTTING EDGE S.A.S.	Franta	LENTILĂ INTRAOCULARĂ Synthesis Toric CYL+6.00 SPH+17.50 SIPTY600+17.50	DM000333793

IMUNOTEHNOMED S.R.L.	CUTTING EDGE S.A.S.	Franta	LENTILĂ INTRAOCULARĂ Synthesis Toric CYL+0.75 SPH+18.00 SIPTY075+18.00	DM000333794
IMUNOTEHNOMED S.R.L.	CUTTING EDGE S.A.S.	Franta	LENTILĂ INTRAOCULARĂ Synthesis Toric CYL+1.00 SPH+18.00 SIPTY100+18.00	DM000333795
IMUNOTEHNOMED S.R.L.	CUTTING EDGE S.A.S.	Franta	LENTILĂ INTRAOCULARĂ Synthesis Toric CYL+1.50 SPH+18.00 SIPTY150+18.00	DM000333796
IMUNOTEHNOMED S.R.L.	CUTTING EDGE S.A.S.	Franta	LENTILĂ INTRAOCULARĂ Synthesis Toric CYL+2.25 SPH+18.00 SIPTY225+18.00	DM000333797
IMUNOTEHNOMED S.R.L.	CUTTING EDGE S.A.S.	Franta	LENTILĂ INTRAOCULARĂ Synthesis Toric CYL+3.00 SPH+18.00 SIPTY300+18.00	DM000333798
IMUNOTEHNOMED S.R.L.	CUTTING EDGE S.A.S.	Franta	LENTILĂ INTRAOCULARĂ Synthesis Toric CYL+3.75 SPH+18.00 SIPTY375+18.00	DM000333799
IMUNOTEHNOMED S.R.L.	CUTTING EDGE S.A.S.	Franta	LENTILĂ INTRAOCULARĂ Synthesis Toric CYL+4.50 SPH+18.00 SIPTY450+18.00	DM000333800
IMUNOTEHNOMED S.R.L.	CUTTING EDGE S.A.S.	Franta	LENTILĂ INTRAOCULARĂ Synthesis Toric CYL+5.25 SPH+18.00 SIPTY525+18.00	DM000333801
IMUNOTEHNOMED S.R.L.	CUTTING EDGE S.A.S.	Franta	LENTILĂ INTRAOCULARĂ Synthesis Toric CYL+6.00 SPH+18.00 SIPTY600+18.00	DM000333802
IMUNOTEHNOMED S.R.L.	CUTTING EDGE S.A.S.	Franta	LENTILĂ INTRAOCULARĂ Synthesis Toric CYL+0.75 SPH+18.50 SIPTY075+18.50	DM000333803
IMUNOTEHNOMED S.R.L.	CUTTING EDGE S.A.S.	Franta	LENTILĂ INTRAOCULARĂ Synthesis Toric CYL+1.00 SPH+18.50 SIPTY100+18.50	DM000333804
IMUNOTEHNOMED S.R.L.	CUTTING EDGE S.A.S.	Franta	LENTILĂ INTRAOCULARĂ Synthesis Toric CYL+1.50 SPH+18.50 SIPTY150+18.50	DM000333805
IMUNOTEHNOMED S.R.L.	CUTTING EDGE S.A.S.	Franta	LENTILĂ INTRAOCULARĂ Synthesis Toric CYL+2.25 SPH+18.50 SIPTY225+18.50	DM000333806
IMUNOTEHNOMED S.R.L.	CUTTING EDGE S.A.S.	Franta	LENTILĂ INTRAOCULARĂ Synthesis Toric CYL+3.00 SPH+18.50 SIPTY300+18.50	DM000333807
IMUNOTEHNOMED S.R.L.	CUTTING EDGE S.A.S.	Franta	LENTILĂ INTRAOCULARĂ Synthesis Toric CYL+3.75 SPH+18.50 SIPTY375+18.50	DM000333808
IMUNOTEHNOMED S.R.L.	CUTTING EDGE S.A.S.	Franta	LENTILĂ INTRAOCULARĂ Synthesis Toric CYL+4.50 SPH+18.50 SIPTY450+18.50	DM000333809
IMUNOTEHNOMED S.R.L.	CUTTING EDGE S.A.S.	Franta	LENTILĂ INTRAOCULARĂ Synthesis Toric CYL+5.25 SPH+18.50 SIPTY525+18.50	DM000333810
IMUNOTEHNOMED S.R.L.	CUTTING EDGE S.A.S.	Franta	LENTILĂ INTRAOCULARĂ Synthesis Toric CYL+6.00 SPH+18.50 SIPTY600+18.50	DM000333811
IMUNOTEHNOMED S.R.L.	CUTTING EDGE S.A.S.	Franta	LENTILĂ INTRAOCULARĂ Synthesis Toric CYL+0.75 SPH+19.00 SIPTY075+19.00	DM000333812
IMUNOTEHNOMED S.R.L.	CUTTING EDGE S.A.S.	Franta	LENTILĂ INTRAOCULARĂ Synthesis Toric CYL+1.00 SPH+19.00 SIPTY100+19.00	DM000333813
IMUNOTEHNOMED S.R.L.	CUTTING EDGE S.A.S.	Franta	LENTILĂ INTRAOCULARĂ Synthesis Toric CYL+1.50 SPH+19.00 SIPTY150+19.00	DM000333814
IMUNOTEHNOMED S.R.L.	CUTTING EDGE S.A.S.	Franta	LENTILĂ INTRAOCULARĂ Synthesis Toric CYL+2.25 SPH+19.00 SIPTY225+19.00	DM000333815
IMUNOTEHNOMED S.R.L.	CUTTING EDGE S.A.S.	Franta	LENTILĂ INTRAOCULARĂ Synthesis Toric CYL+3.00 SPH+19.00 SIPTY300+19.00	DM000333816
IMUNOTEHNOMED S.R.L.	CUTTING EDGE S.A.S.	Franta	LENTILĂ INTRAOCULARĂ Synthesis Toric CYL+3.75 SPH+19.00 SIPTY375+19.00	DM000333817
IMUNOTEHNOMED S.R.L.	CUTTING EDGE S.A.S.	Franta	LENTILĂ INTRAOCULARĂ Synthesis Toric CYL+4.50 SPH+19.00 SIPTY450+19.00	DM000333818
IMUNOTEHNOMED S.R.L.	CUTTING EDGE S.A.S.	Franta	LENTILĂ INTRAOCULARĂ Synthesis Toric CYL+5.25 SPH+19.00 SIPTY525+19.00	DM000333819
IMUNOTEHNOMED S.R.L.	CUTTING EDGE S.A.S.	Franta	LENTILĂ INTRAOCULARĂ Synthesis Toric CYL+6.00 SPH+19.00 SIPTY600+19.00	DM000333820
IMUNOTEHNOMED S.R.L.	CUTTING EDGE S.A.S.	Franta	LENTILĂ INTRAOCULARĂ Synthesis Toric CYL+0.75 SPH+19.50 SIPTY075+19.50	DM000333821
IMUNOTEHNOMED S.R.L.	CUTTING EDGE S.A.S.	Franta	LENTILĂ INTRAOCULARĂ Synthesis Toric CYL+1.00 SPH+19.50 SIPTY100+19.50	DM000333822
IMUNOTEHNOMED S.R.L.	CUTTING EDGE S.A.S.	Franta	LENTILĂ INTRAOCULARĂ Synthesis Toric CYL+1.50 SPH+19.50 SIPTY150+19.50	DM000333823
IMUNOTEHNOMED S.R.L.	CUTTING EDGE S.A.S.	Franta	LENTILĂ INTRAOCULARĂ Synthesis Toric CYL+2.25 SPH+19.50 SIPTY225+19.50	DM000333824
IMUNOTEHNOMED S.R.L.	CUTTING EDGE S.A.S.	Franta	LENTILĂ INTRAOCULARĂ Synthesis Toric CYL+3.00 SPH+19.50 SIPTY300+19.50	DM000333825
IMUNOTEHNOMED S.R.L.	CUTTING EDGE S.A.S.	Franta	LENTILĂ INTRAOCULARĂ Synthesis Toric CYL+3.75 SPH+19.50 SIPTY375+19.50	DM000333826

IMUNOTEHNOMED S.R.L.	CUTTING EDGE S.A.S.	Franta	LENTILĂ INTRAOCULARĂ Synthesis Toric CYL+4.50 SPH+19.50 SIPTY450+19.50	DM000333827
IMUNOTEHNOMED S.R.L.	CUTTING EDGE S.A.S.	Franta	LENTILĂ INTRAOCULARĂ Synthesis Toric CYL+5.25 SPH+19.50 SIPTY525+19.50	DM000333828
IMUNOTEHNOMED S.R.L.	CUTTING EDGE S.A.S.	Franta	LENTILĂ INTRAOCULARĂ Synthesis Toric CYL+6.00 SPH+19.50 SIPTY600+19.50	DM000333829
IMUNOTEHNOMED S.R.L.	CUTTING EDGE S.A.S.	Franta	LENTILĂ INTRAOCULARĂ Synthesis Toric CYL+0.75 SPH+20.00 SIPTY075+20.00	DM000333830
IMUNOTEHNOMED S.R.L.	CUTTING EDGE S.A.S.	Franta	LENTILĂ INTRAOCULARĂ Synthesis Toric CYL+1.00 SPH+20.00 SIPTY100+20.00	DM000333831
IMUNOTEHNOMED S.R.L.	CUTTING EDGE S.A.S.	Franta	LENTILĂ INTRAOCULARĂ Synthesis Toric CYL+1.50 SPH+20.00 SIPTY150+20.00	DM000333832
IMUNOTEHNOMED S.R.L.	CUTTING EDGE S.A.S.	Franta	LENTILĂ INTRAOCULARĂ Synthesis Toric CYL+2.25 SPH+20.00 SIPTY225+20.00	DM000333833
IMUNOTEHNOMED S.R.L.	CUTTING EDGE S.A.S.	Franta	LENTILĂ INTRAOCULARĂ Synthesis Toric CYL+3.00 SPH+20.00 SIPTY300+20.00	DM000333834
IMUNOTEHNOMED S.R.L.	CUTTING EDGE S.A.S.	Franta	LENTILĂ INTRAOCULARĂ Synthesis Toric CYL+3.75 SPH+20.00 SIPTY375+20.00	DM000333835
IMUNOTEHNOMED S.R.L.	CUTTING EDGE S.A.S.	Franta	LENTILĂ INTRAOCULARĂ Synthesis Toric CYL+4.50 SPH+20.00 SIPTY450+20.00	DM000333836
IMUNOTEHNOMED S.R.L.	CUTTING EDGE S.A.S.	Franta	LENTILĂ INTRAOCULARĂ Synthesis Toric CYL+5.25 SPH+20.00 SIPTY525+20.00	DM000333837
IMUNOTEHNOMED S.R.L.	CUTTING EDGE S.A.S.	Franta	LENTILĂ INTRAOCULARĂ Synthesis Toric CYL+6.00 SPH+20.00 SIPTY600+20.00	DM000333838
IMUNOTEHNOMED S.R.L.	CUTTING EDGE S.A.S.	Franta	LENTILĂ INTRAOCULARĂ Synthesis Toric CYL+0.75 SPH+20.50 SIPTY075+20.50	DM000333839
IMUNOTEHNOMED S.R.L.	CUTTING EDGE S.A.S.	Franta	LENTILĂ INTRAOCULARĂ Synthesis Toric CYL+1.00 SPH+20.50 SIPTY100+20.50	DM000333840
IMUNOTEHNOMED S.R.L.	CUTTING EDGE S.A.S.	Franta	LENTILĂ INTRAOCULARĂ Synthesis Toric CYL+1.50 SPH+20.50 SIPTY150+20.50	DM000333841
IMUNOTEHNOMED S.R.L.	CUTTING EDGE S.A.S.	Franta	LENTILĂ INTRAOCULARĂ Synthesis Toric CYL+2.25 SPH+20.50 SIPTY225+20.50	DM000333842
IMUNOTEHNOMED S.R.L.	CUTTING EDGE S.A.S.	Franta	LENTILĂ INTRAOCULARĂ Synthesis Toric CYL+3.00 SPH+20.50 SIPTY300+20.50	DM000333843
IMUNOTEHNOMED S.R.L.	CUTTING EDGE S.A.S.	Franta	LENTILĂ INTRAOCULARĂ Synthesis Toric CYL+3.75 SPH+20.50 SIPTY375+20.50	DM000333844
IMUNOTEHNOMED S.R.L.	CUTTING EDGE S.A.S.	Franta	LENTILĂ INTRAOCULARĂ Synthesis Toric CYL+4.50 SPH+20.50 SIPTY450+20.50	DM000333845
IMUNOTEHNOMED S.R.L.	CUTTING EDGE S.A.S.	Franta	LENTILĂ INTRAOCULARĂ Synthesis Toric CYL+5.25 SPH+20.50 SIPTY525+20.50	DM000333846
IMUNOTEHNOMED S.R.L.	CUTTING EDGE S.A.S.	Franta	LENTILĂ INTRAOCULARĂ Synthesis Toric CYL+6.00 SPH+20.50 SIPTY600+20.50	DM000333847
IMUNOTEHNOMED S.R.L.	CUTTING EDGE S.A.S.	Franta	LENTILĂ INTRAOCULARĂ Synthesis Toric CYL+0.75 SPH+21.00 SIPTY075+21.00	DM000333848
IMUNOTEHNOMED S.R.L.	CUTTING EDGE S.A.S.	Franta	LENTILĂ INTRAOCULARĂ Synthesis Toric CYL+1.00 SPH+21.00 SIPTY100+21.00	DM000333849
IMUNOTEHNOMED S.R.L.	CUTTING EDGE S.A.S.	Franta	LENTILĂ INTRAOCULARĂ Synthesis Toric CYL+1.50 SPH+21.00 SIPTY150+21.00	DM000333850
IMUNOTEHNOMED S.R.L.	CUTTING EDGE S.A.S.	Franta	LENTILĂ INTRAOCULARĂ Synthesis Toric CYL+2.25 SPH+21.00 SIPTY225+21.00	DM000333851
IMUNOTEHNOMED S.R.L.	CUTTING EDGE S.A.S.	Franta	LENTILĂ INTRAOCULARĂ Synthesis Toric CYL+3.00 SPH+21.00 SIPTY300+21.00	DM000333852
IMUNOTEHNOMED S.R.L.	CUTTING EDGE S.A.S.	Franta	LENTILĂ INTRAOCULARĂ Synthesis Toric CYL+3.75 SPH+21.00 SIPTY375+21.00	DM000333853
IMUNOTEHNOMED S.R.L.	CUTTING EDGE S.A.S.	Franta	LENTILĂ INTRAOCULARĂ Synthesis Toric CYL+4.50 SPH+21.00 SIPTY450+21.00	DM000333854
IMUNOTEHNOMED S.R.L.	CUTTING EDGE S.A.S.	Franta	LENTILĂ INTRAOCULARĂ Synthesis Toric CYL+5.25 SPH+21.00 SIPTY525+21.00	DM000333855
IMUNOTEHNOMED S.R.L.	CUTTING EDGE S.A.S.	Franta	LENTILĂ INTRAOCULARĂ Synthesis Toric CYL+6.00 SPH+21.00 SIPTY600+21.00	DM000333856
IMUNOTEHNOMED S.R.L.	CUTTING EDGE S.A.S.	Franta	LENTILĂ INTRAOCULARĂ Synthesis Toric CYL+0.75 SPH+21.50 SIPTY075+21.50	DM000333857
IMUNOTEHNOMED S.R.L.	CUTTING EDGE S.A.S.	Franta	LENTILĂ INTRAOCULARĂ Synthesis Toric CYL+1.00 SPH+21.50 SIPTY100+21.50	DM000333858
IMUNOTEHNOMED S.R.L.	CUTTING EDGE S.A.S.	Franta	LENTILĂ INTRAOCULARĂ Synthesis Toric CYL+1.50 SPH+21.50 SIPTY150+21.50	DM000333859

IMUNOTEHNOMED S.R.L.	CUTTING EDGE S.A.S.	Franta	LENTILĂ INTRAOCULARĂ Synthesis Toric CYL+2.25 SPH+21.50 SIPTY225+21.50	DM000333860
IMUNOTEHNOMED S.R.L.	CUTTING EDGE S.A.S.	Franta	LENTILĂ INTRAOCULARĂ Synthesis Toric CYL+3.00 SPH+21.50 SIPTY300+21.50	DM000333861
IMUNOTEHNOMED S.R.L.	CUTTING EDGE S.A.S.	Franta	LENTILĂ INTRAOCULARĂ Synthesis Toric CYL+3.75 SPH+21.50 SIPTY375+21.50	DM000333862
IMUNOTEHNOMED S.R.L.	CUTTING EDGE S.A.S.	Franta	LENTILĂ INTRAOCULARĂ Synthesis Toric CYL+4.50 SPH+21.50 SIPTY450+21.50	DM000333863
IMUNOTEHNOMED S.R.L.	CUTTING EDGE S.A.S.	Franta	LENTILĂ INTRAOCULARĂ Synthesis Toric CYL+5.25 SPH+21.50 SIPTY525+21.50	DM000333864
IMUNOTEHNOMED S.R.L.	CUTTING EDGE S.A.S.	Franta	LENTILĂ INTRAOCULARĂ Synthesis Toric CYL+6.00 SPH+21.50 SIPTY600+21.50	DM000333865
IMUNOTEHNOMED S.R.L.	CUTTING EDGE S.A.S.	Franta	LENTILĂ INTRAOCULARĂ Synthesis Toric CYL+0.75 SPH+22.00 SIPTY075+22.00	DM000333866
IMUNOTEHNOMED S.R.L.	CUTTING EDGE S.A.S.	Franta	LENTILĂ INTRAOCULARĂ Synthesis Toric CYL+1.00 SPH+22.00 SIPTY100+22.00	DM000333867
IMUNOTEHNOMED S.R.L.	CUTTING EDGE S.A.S.	Franta	LENTILĂ INTRAOCULARĂ Synthesis Toric CYL+1.50 SPH+22.00 SIPTY150+22.00	DM000333868
IMUNOTEHNOMED S.R.L.	CUTTING EDGE S.A.S.	Franta	LENTILĂ INTRAOCULARĂ Synthesis Toric CYL+2.25 SPH+22.00 SIPTY225+22.00	DM000333869
IMUNOTEHNOMED S.R.L.	CUTTING EDGE S.A.S.	Franta	LENTILĂ INTRAOCULARĂ Synthesis Toric CYL+3.00 SPH+22.00 SIPTY300+22.00	DM000333870
IMUNOTEHNOMED S.R.L.	CUTTING EDGE S.A.S.	Franta	LENTILĂ INTRAOCULARĂ Synthesis Toric CYL+3.75 SPH+22.00 SIPTY375+22.00	DM000333871
IMUNOTEHNOMED S.R.L.	CUTTING EDGE S.A.S.	Franta	LENTILĂ INTRAOCULARĂ Synthesis Toric CYL+4.50 SPH+22.00 SIPTY450+22.00	DM000333872
IMUNOTEHNOMED S.R.L.	CUTTING EDGE S.A.S.	Franta	LENTILĂ INTRAOCULARĂ Synthesis Toric CYL+5.25 SPH+22.00 SIPTY525+22.00	DM000333873
IMUNOTEHNOMED S.R.L.	CUTTING EDGE S.A.S.	Franta	LENTILĂ INTRAOCULARĂ Synthesis Toric CYL+6.00 SPH+22.00 SIPTY600+22.00	DM000333874
IMUNOTEHNOMED S.R.L.	CUTTING EDGE S.A.S.	Franta	LENTILĂ INTRAOCULARĂ Synthesis Toric CYL+0.75 SPH+22.50 SIPTY075+22.50	DM000333875
IMUNOTEHNOMED S.R.L.	CUTTING EDGE S.A.S.	Franta	LENTILĂ INTRAOCULARĂ Synthesis Toric CYL+1.00 SPH+22.50 SIPTY100+22.50	DM000333876
IMUNOTEHNOMED S.R.L.	CUTTING EDGE S.A.S.	Franta	LENTILĂ INTRAOCULARĂ Synthesis Toric CYL+1.50 SPH+22.50 SIPTY150+22.50	DM000333877
IMUNOTEHNOMED S.R.L.	CUTTING EDGE S.A.S.	Franta	LENTILĂ INTRAOCULARĂ Synthesis Toric CYL+2.25 SPH+22.50 SIPTY225+22.50	DM000333878
IMUNOTEHNOMED S.R.L.	CUTTING EDGE S.A.S.	Franta	LENTILĂ INTRAOCULARĂ Synthesis Toric CYL+3.00 SPH+22.50 SIPTY300+22.50	DM000333879
IMUNOTEHNOMED S.R.L.	CUTTING EDGE S.A.S.	Franta	LENTILĂ INTRAOCULARĂ Synthesis Toric CYL+3.75 SPH+22.50 SIPTY375+22.50	DM000333880
IMUNOTEHNOMED S.R.L.	CUTTING EDGE S.A.S.	Franta	LENTILĂ INTRAOCULARĂ Synthesis Toric CYL+4.50 SPH+22.50 SIPTY450+22.50	DM000333881
IMUNOTEHNOMED S.R.L.	CUTTING EDGE S.A.S.	Franta	LENTILĂ INTRAOCULARĂ Synthesis Toric CYL+5.25 SPH+22.50 SIPTY525+22.50	DM000333882
IMUNOTEHNOMED S.R.L.	CUTTING EDGE S.A.S.	Franta	LENTILĂ INTRAOCULARĂ Synthesis Toric CYL+6.00 SPH+22.50 SIPTY600+22.50	DM000333883
IMUNOTEHNOMED S.R.L.	CUTTING EDGE S.A.S.	Franta	LENTILĂ INTRAOCULARĂ Synthesis Toric CYL+0.75 SPH+23.00 SIPTY075+23.00	DM000333884
IMUNOTEHNOMED S.R.L.	CUTTING EDGE S.A.S.	Franta	LENTILĂ INTRAOCULARĂ Synthesis Toric CYL+1.00 SPH+23.00 SIPTY100+23.00	DM000333885
IMUNOTEHNOMED S.R.L.	CUTTING EDGE S.A.S.	Franta	LENTILĂ INTRAOCULARĂ Synthesis Toric CYL+1.50 SPH+23.00 SIPTY150+23.00	DM000333886
IMUNOTEHNOMED S.R.L.	CUTTING EDGE S.A.S.	Franta	LENTILĂ INTRAOCULARĂ Synthesis Toric CYL+2.25 SPH+23.00 SIPTY225+23.00	DM000333887
IMUNOTEHNOMED S.R.L.	CUTTING EDGE S.A.S.	Franta	LENTILĂ INTRAOCULARĂ Synthesis Toric CYL+3.00 SPH+23.00 SIPTY300+23.00	DM000333888
IMUNOTEHNOMED S.R.L.	CUTTING EDGE S.A.S.	Franta	LENTILĂ INTRAOCULARĂ Synthesis Toric CYL+3.75 SPH+23.00 SIPTY375+23.00	DM000333889
IMUNOTEHNOMED S.R.L.	CUTTING EDGE S.A.S.	Franta	LENTILĂ INTRAOCULARĂ Synthesis Toric CYL+4.50 SPH+23.00 SIPTY450+23.00	DM000333890
IMUNOTEHNOMED S.R.L.	CUTTING EDGE S.A.S.	Franta	LENTILĂ INTRAOCULARĂ Synthesis Toric CYL+5.25 SPH+23.00 SIPTY525+23.00	DM000333891
IMUNOTEHNOMED S.R.L.	CUTTING EDGE S.A.S.	Franta	LENTILĂ INTRAOCULARĂ Synthesis Toric CYL+6.00 SPH+23.00 SIPTY600+23.00	DM000333892

IMUNOTEHNOMED S.R.L.	CUTTING EDGE S.A.S.	Franta	LENTILĂ INTRAOCULARĂ Synthesis Toric CYL+0.75 SPH+23.50 SIPTY075+23.50	DM000333893
IMUNOTEHNOMED S.R.L.	CUTTING EDGE S.A.S.	Franta	LENTILĂ INTRAOCULARĂ Synthesis Toric CYL+1.00 SPH+23.50 SIPTY100+23.50	DM000333894
IMUNOTEHNOMED S.R.L.	CUTTING EDGE S.A.S.	Franta	LENTILĂ INTRAOCULARĂ Synthesis Toric CYL+1.50 SPH+23.50 SIPTY150+23.50	DM000333895
IMUNOTEHNOMED S.R.L.	CUTTING EDGE S.A.S.	Franta	LENTILĂ INTRAOCULARĂ Synthesis Toric CYL+2.25 SPH+23.50 SIPTY225+23.50	DM000333896
IMUNOTEHNOMED S.R.L.	CUTTING EDGE S.A.S.	Franta	LENTILĂ INTRAOCULARĂ Synthesis Toric CYL+3.00 SPH+23.50 SIPTY300+23.50	DM000333897
IMUNOTEHNOMED S.R.L.	CUTTING EDGE S.A.S.	Franta	LENTILĂ INTRAOCULARĂ Synthesis Toric CYL+3.75 SPH+23.50 SIPTY375+23.50	DM000333898
IMUNOTEHNOMED S.R.L.	CUTTING EDGE S.A.S.	Franta	LENTILĂ INTRAOCULARĂ Synthesis Toric CYL+4.50 SPH+23.50 SIPTY450+23.50	DM000333899
IMUNOTEHNOMED S.R.L.	CUTTING EDGE S.A.S.	Franta	LENTILĂ INTRAOCULARĂ Synthesis Toric CYL+5.25 SPH+23.50 SIPTY525+23.50	DM000333900
IMUNOTEHNOMED S.R.L.	CUTTING EDGE S.A.S.	Franta	LENTILĂ INTRAOCULARĂ Synthesis Toric CYL+6.00 SPH+23.50 SIPTY600+23.50	DM000333901
IMUNOTEHNOMED S.R.L.	CUTTING EDGE S.A.S.	Franta	LENTILĂ INTRAOCULARĂ Synthesis Toric CYL+0.75 SPH+24.00 SIPTY075+24.00	DM000333902
IMUNOTEHNOMED S.R.L.	CUTTING EDGE S.A.S.	Franta	LENTILĂ INTRAOCULARĂ Synthesis Toric CYL+1.00 SPH+24.00 SIPTY100+24.00	DM000333903
IMUNOTEHNOMED S.R.L.	CUTTING EDGE S.A.S.	Franta	LENTILĂ INTRAOCULARĂ Synthesis Toric CYL+1.50 SPH+24.00 SIPTY150+24.00	DM000333904
IMUNOTEHNOMED S.R.L.	CUTTING EDGE S.A.S.	Franta	LENTILĂ INTRAOCULARĂ Synthesis Toric CYL+2.25 SPH+24.00 SIPTY225+24.00	DM000333905
IMUNOTEHNOMED S.R.L.	CUTTING EDGE S.A.S.	Franta	LENTILĂ INTRAOCULARĂ Synthesis Toric CYL+3.00 SPH+24.00 SIPTY300+24.00	DM000333906
IMUNOTEHNOMED S.R.L.	CUTTING EDGE S.A.S.	Franta	LENTILĂ INTRAOCULARĂ Synthesis Toric CYL+3.75 SPH+24.00 SIPTY375+24.00	DM000333907
IMUNOTEHNOMED S.R.L.	CUTTING EDGE S.A.S.	Franta	LENTILĂ INTRAOCULARĂ Synthesis Toric CYL+4.50 SPH+24.00 SIPTY450+24.00	DM000333908
IMUNOTEHNOMED S.R.L.	CUTTING EDGE S.A.S.	Franta	LENTILĂ INTRAOCULARĂ Synthesis Toric CYL+5.25 SPH+24.00 SIPTY525+24.00	DM000333909
IMUNOTEHNOMED S.R.L.	CUTTING EDGE S.A.S.	Franta	LENTILĂ INTRAOCULARĂ Synthesis Toric CYL+6.00 SPH+24.00 SIPTY600+24.00	DM000333910
IMUNOTEHNOMED S.R.L.	CUTTING EDGE S.A.S.	Franta	LENTILĂ INTRAOCULARĂ Synthesis Toric CYL+0.75 SPH+24.50 SIPTY075+24.50	DM000333911
IMUNOTEHNOMED S.R.L.	CUTTING EDGE S.A.S.	Franta	LENTILĂ INTRAOCULARĂ Synthesis Toric CYL+1.00 SPH+24.50 SIPTY100+24.50	DM000333912
IMUNOTEHNOMED S.R.L.	CUTTING EDGE S.A.S.	Franta	LENTILĂ INTRAOCULARĂ Synthesis Toric CYL+1.50 SPH+24.50 SIPTY150+24.50	DM000333913
IMUNOTEHNOMED S.R.L.	CUTTING EDGE S.A.S.	Franta	LENTILĂ INTRAOCULARĂ Synthesis Toric CYL+2.25 SPH+24.50 SIPTY225+24.50	DM000333914
IMUNOTEHNOMED S.R.L.	CUTTING EDGE S.A.S.	Franta	LENTILĂ INTRAOCULARĂ Synthesis Toric CYL+3.00 SPH+24.50 SIPTY300+24.50	DM000333915
IMUNOTEHNOMED S.R.L.	CUTTING EDGE S.A.S.	Franta	LENTILĂ INTRAOCULARĂ Synthesis Toric CYL+3.75 SPH+24.50 SIPTY375+24.50	DM000333916
IMUNOTEHNOMED S.R.L.	CUTTING EDGE S.A.S.	Franta	LENTILĂ INTRAOCULARĂ Synthesis Toric CYL+4.50 SPH+24.50 SIPTY450+24.50	DM000333917
IMUNOTEHNOMED S.R.L.	CUTTING EDGE S.A.S.	Franta	LENTILĂ INTRAOCULARĂ Synthesis Toric CYL+5.25 SPH+24.50 SIPTY525+24.50	DM000333918
IMUNOTEHNOMED S.R.L.	CUTTING EDGE S.A.S.	Franta	LENTILĂ INTRAOCULARĂ Synthesis Toric CYL+6.00 SPH+24.50 SIPTY600+24.50	DM000333919
IMUNOTEHNOMED S.R.L.	CUTTING EDGE S.A.S.	Franta	LENTILĂ INTRAOCULARĂ Synthesis Toric CYL+0.75 SPH+25.00 SIPTY075+25.00	DM000333920
IMUNOTEHNOMED S.R.L.	CUTTING EDGE S.A.S.	Franta	LENTILĂ INTRAOCULARĂ Synthesis Toric CYL+1.00 SPH+25.00 SIPTY100+25.00	DM000333921
IMUNOTEHNOMED S.R.L.	CUTTING EDGE S.A.S.	Franta	LENTILĂ INTRAOCULARĂ Synthesis Toric CYL+1.50 SPH+25.00 SIPTY150+25.00	DM000333922
IMUNOTEHNOMED S.R.L.	CUTTING EDGE S.A.S.	Franta	LENTILĂ INTRAOCULARĂ Synthesis Toric CYL+2.25 SPH+25.00 SIPTY225+25.00	DM000333923
IMUNOTEHNOMED S.R.L.	CUTTING EDGE S.A.S.	Franta	LENTILĂ INTRAOCULARĂ Synthesis Toric CYL+3.00 SPH+25.00 SIPTY300+25.00	DM000333924
IMUNOTEHNOMED S.R.L.	CUTTING EDGE S.A.S.	Franta	LENTILĂ INTRAOCULARĂ Synthesis Toric CYL+3.75 SPH+25.00 SIPTY375+25.00	DM000333925

IMUNOTEHNOMED S.R.L.	CUTTING EDGE S.A.S.	Franta	LENTILĂ INTRAOCULARĂ Synthesis Toric CYL+4.50 SPH+25.00 SIPTY450+25.00	DM000333926
IMUNOTEHNOMED S.R.L.	CUTTING EDGE S.A.S.	Franta	LENTILĂ INTRAOCULARĂ Synthesis Toric CYL+5.25 SPH+25.00 SIPTY525+25.00	DM000333927
IMUNOTEHNOMED S.R.L.	CUTTING EDGE S.A.S.	Franta	LENTILĂ INTRAOCULARĂ Synthesis Toric CYL+6.00 SPH+25.00 SIPTY600+25.00	DM000333928
IMUNOTEHNOMED S.R.L.	CUTTING EDGE S.A.S.	Franta	LENTILĂ INTRAOCULARĂ Synthesis Toric CYL+0.75 SPH+25.50 SIPTY075+25.50	DM000333929
IMUNOTEHNOMED S.R.L.	CUTTING EDGE S.A.S.	Franta	LENTILĂ INTRAOCULARĂ Synthesis Toric CYL+1.00 SPH+25.50 SIPTY100+25.50	DM000333930
IMUNOTEHNOMED S.R.L.	CUTTING EDGE S.A.S.	Franta	LENTILĂ INTRAOCULARĂ Synthesis Toric CYL+1.50 SPH+25.50 SIPTY150+25.50	DM000333931
IMUNOTEHNOMED S.R.L.	CUTTING EDGE S.A.S.	Franta	LENTILĂ INTRAOCULARĂ Synthesis Toric CYL+2.25 SPH+25.50 SIPTY225+25.50	DM000333932
IMUNOTEHNOMED S.R.L.	CUTTING EDGE S.A.S.	Franta	LENTILĂ INTRAOCULARĂ Synthesis Toric CYL+3.00 SPH+25.50 SIPTY300+25.50	DM000333933
IMUNOTEHNOMED S.R.L.	CUTTING EDGE S.A.S.	Franta	LENTILĂ INTRAOCULARĂ Synthesis Toric CYL+3.75 SPH+25.50 SIPTY375+25.50	DM000333934
IMUNOTEHNOMED S.R.L.	CUTTING EDGE S.A.S.	Franta	LENTILĂ INTRAOCULARĂ Synthesis Toric CYL+4.50 SPH+25.50 SIPTY450+25.50	DM000333935
IMUNOTEHNOMED S.R.L.	CUTTING EDGE S.A.S.	Franta	LENTILĂ INTRAOCULARĂ Synthesis Toric CYL+5.25 SPH+25.50 SIPTY525+25.50	DM000333936
IMUNOTEHNOMED S.R.L.	CUTTING EDGE S.A.S.	Franta	LENTILĂ INTRAOCULARĂ Synthesis Toric CYL+6.00 SPH+25.50 SIPTY600+25.50	DM000333937
IMUNOTEHNOMED S.R.L.	CUTTING EDGE S.A.S.	Franta	LENTILĂ INTRAOCULARĂ Synthesis Toric CYL+0.75 SPH+26.00 SIPTY075+26.00	DM000333938
IMUNOTEHNOMED S.R.L.	CUTTING EDGE S.A.S.	Franta	LENTILĂ INTRAOCULARĂ Synthesis Toric CYL+1.00 SPH+26.00 SIPTY100+26.00	DM000333939
IMUNOTEHNOMED S.R.L.	CUTTING EDGE S.A.S.	Franta	LENTILĂ INTRAOCULARĂ Synthesis Toric CYL+1.50 SPH+26.00 SIPTY150+26.00	DM000333940
IMUNOTEHNOMED S.R.L.	CUTTING EDGE S.A.S.	Franta	LENTILĂ INTRAOCULARĂ Synthesis Toric CYL+2.25 SPH+26.00 SIPTY225+26.00	DM000333941
IMUNOTEHNOMED S.R.L.	CUTTING EDGE S.A.S.	Franta	LENTILĂ INTRAOCULARĂ Synthesis Toric CYL+3.00 SPH+26.00 SIPTY300+26.00	DM000333942
IMUNOTEHNOMED S.R.L.	CUTTING EDGE S.A.S.	Franta	LENTILĂ INTRAOCULARĂ Synthesis Toric CYL+3.75 SPH+26.00 SIPTY375+26.00	DM000333943
IMUNOTEHNOMED S.R.L.	CUTTING EDGE S.A.S.	Franta	LENTILĂ INTRAOCULARĂ Synthesis Toric CYL+4.50 SPH+26.00 SIPTY450+26.00	DM000333944
IMUNOTEHNOMED S.R.L.	CUTTING EDGE S.A.S.	Franta	LENTILĂ INTRAOCULARĂ Synthesis Toric CYL+5.25 SPH+26.00 SIPTY525+26.00	DM000333945
IMUNOTEHNOMED S.R.L.	CUTTING EDGE S.A.S.	Franta	LENTILĂ INTRAOCULARĂ Synthesis Toric CYL+6.00 SPH+26.00 SIPTY600+26.00	DM000333946
IMUNOTEHNOMED S.R.L.	CUTTING EDGE S.A.S.	Franta	LENTILĂ INTRAOCULARĂ Synthesis Toric CYL+0.75 SPH+26.50 SIPTY075+26.50	DM000333947
IMUNOTEHNOMED S.R.L.	CUTTING EDGE S.A.S.	Franta	LENTILĂ INTRAOCULARĂ Synthesis Toric CYL+1.00 SPH+26.50 SIPTY100+26.50	DM000333948
IMUNOTEHNOMED S.R.L.	CUTTING EDGE S.A.S.	Franta	LENTILĂ INTRAOCULARĂ Synthesis Toric CYL+1.50 SPH+26.50 SIPTY150+26.50	DM000333949
IMUNOTEHNOMED S.R.L.	CUTTING EDGE S.A.S.	Franta	LENTILĂ INTRAOCULARĂ Synthesis Toric CYL+2.25 SPH+26.50 SIPTY225+26.50	DM000333950
IMUNOTEHNOMED S.R.L.	CUTTING EDGE S.A.S.	Franta	LENTILĂ INTRAOCULARĂ Synthesis Toric CYL+3.00 SPH+26.50 SIPTY300+26.50	DM000333951
IMUNOTEHNOMED S.R.L.	CUTTING EDGE S.A.S.	Franta	LENTILĂ INTRAOCULARĂ Synthesis Toric CYL+3.75 SPH+26.50 SIPTY375+26.50	DM000333952
IMUNOTEHNOMED S.R.L.	CUTTING EDGE S.A.S.	Franta	LENTILĂ INTRAOCULARĂ Synthesis Toric CYL+4.50 SPH+26.50 SIPTY450+26.50	DM000333953
IMUNOTEHNOMED S.R.L.	CUTTING EDGE S.A.S.	Franta	LENTILĂ INTRAOCULARĂ Synthesis Toric CYL+5.25 SPH+26.50 SIPTY525+26.50	DM000333954
IMUNOTEHNOMED S.R.L.	CUTTING EDGE S.A.S.	Franta	LENTILĂ INTRAOCULARĂ Synthesis Toric CYL+6.00 SPH+26.50 SIPTY600+26.50	DM000333955
IMUNOTEHNOMED S.R.L.	CUTTING EDGE S.A.S.	Franta	LENTILĂ INTRAOCULARĂ Synthesis Toric CYL+0.75 SPH+27.00 SIPTY075+27.00	DM000333956
IMUNOTEHNOMED S.R.L.	CUTTING EDGE S.A.S.	Franta	LENTILĂ INTRAOCULARĂ Synthesis Toric CYL+1.00 SPH+27.00 SIPTY100+27.00	DM000333957
IMUNOTEHNOMED S.R.L.	CUTTING EDGE S.A.S.	Franta	LENTILĂ INTRAOCULARĂ Synthesis Toric CYL+1.50 SPH+27.00 SIPTY150+27.00	DM000333958

IMUNOTEHNOMED S.R.L.	CUTTING EDGE S.A.S.	Franta	LENTILĂ INTRAOCULARĂ Synthesis Toric CYL+2.25 SPH+27.00 SIPTY225+27.00	DM000333959
IMUNOTEHNOMED S.R.L.	CUTTING EDGE S.A.S.	Franta	LENTILĂ INTRAOCULARĂ Synthesis Toric CYL+3.00 SPH+27.00 SIPTY300+27.00	DM000333960
IMUNOTEHNOMED S.R.L.	CUTTING EDGE S.A.S.	Franta	LENTILĂ INTRAOCULARĂ Synthesis Toric CYL+3.75 SPH+27.00 SIPTY375+27.00	DM000333961
IMUNOTEHNOMED S.R.L.	CUTTING EDGE S.A.S.	Franta	LENTILĂ INTRAOCULARĂ Synthesis Toric CYL+4.50 SPH+27.00 SIPTY450+27.00	DM000333962
IMUNOTEHNOMED S.R.L.	CUTTING EDGE S.A.S.	Franta	LENTILĂ INTRAOCULARĂ Synthesis Toric CYL+5.25 SPH+27.00 SIPTY525+27.00	DM000333963
IMUNOTEHNOMED S.R.L.	CUTTING EDGE S.A.S.	Franta	LENTILĂ INTRAOCULARĂ Synthesis Toric CYL+6.00 SPH+27.00 SIPTY600+27.00	DM000333964
IMUNOTEHNOMED S.R.L.	CUTTING EDGE S.A.S.	Franta	LENTILĂ INTRAOCULARĂ Synthesis Toric CYL+0.75 SPH+27.50 SIPTY075+27.50	DM000333965
IMUNOTEHNOMED S.R.L.	CUTTING EDGE S.A.S.	Franta	LENTILĂ INTRAOCULARĂ Synthesis Toric CYL+1.00 SPH+27.50 SIPTY100+27.50	DM000333966
IMUNOTEHNOMED S.R.L.	CUTTING EDGE S.A.S.	Franta	LENTILĂ INTRAOCULARĂ Synthesis Toric CYL+1.50 SPH+27.50 SIPTY150+27.50	DM000333967
IMUNOTEHNOMED S.R.L.	CUTTING EDGE S.A.S.	Franta	LENTILĂ INTRAOCULARĂ Synthesis Toric CYL+2.25 SPH+27.50 SIPTY225+27.50	DM000333968
IMUNOTEHNOMED S.R.L.	CUTTING EDGE S.A.S.	Franta	LENTILĂ INTRAOCULARĂ Synthesis Toric CYL+3.00 SPH+27.50 SIPTY300+27.50	DM000333969
IMUNOTEHNOMED S.R.L.	CUTTING EDGE S.A.S.	Franta	LENTILĂ INTRAOCULARĂ Synthesis Toric CYL+3.75 SPH+27.50 SIPTY375+27.50	DM000333970
IMUNOTEHNOMED S.R.L.	CUTTING EDGE S.A.S.	Franta	LENTILĂ INTRAOCULARĂ Synthesis Toric CYL+4.50 SPH+27.50 SIPTY450+27.50	DM000333971
IMUNOTEHNOMED S.R.L.	CUTTING EDGE S.A.S.	Franta	LENTILĂ INTRAOCULARĂ Synthesis Toric CYL+5.25 SPH+27.50 SIPTY525+27.50	DM000333972
IMUNOTEHNOMED S.R.L.	CUTTING EDGE S.A.S.	Franta	LENTILĂ INTRAOCULARĂ Synthesis Toric CYL+6.00 SPH+27.50 SIPTY600+27.50	DM000333973
IMUNOTEHNOMED S.R.L.	CUTTING EDGE S.A.S.	Franta	LENTILĂ INTRAOCULARĂ Synthesis Toric CYL+0.75 SPH+28.00 SIPTY075+28.00	DM000333974
IMUNOTEHNOMED S.R.L.	CUTTING EDGE S.A.S.	Franta	LENTILĂ INTRAOCULARĂ Synthesis Toric CYL+1.00 SPH+28.00 SIPTY100+28.00	DM000333975
IMUNOTEHNOMED S.R.L.	CUTTING EDGE S.A.S.	Franta	LENTILĂ INTRAOCULARĂ Synthesis Toric CYL+1.50 SPH+28.00 SIPTY150+28.00	DM000333976
IMUNOTEHNOMED S.R.L.	CUTTING EDGE S.A.S.	Franta	LENTILĂ INTRAOCULARĂ Synthesis Toric CYL+2.25 SPH+28.00 SIPTY225+28.00	DM000333977
IMUNOTEHNOMED S.R.L.	CUTTING EDGE S.A.S.	Franta	LENTILĂ INTRAOCULARĂ Synthesis Toric CYL+3.00 SPH+28.00 SIPTY300+28.00	DM000333978
IMUNOTEHNOMED S.R.L.	CUTTING EDGE S.A.S.	Franta	LENTILĂ INTRAOCULARĂ Synthesis Toric CYL+3.75 SPH+28.00 SIPTY375+28.00	DM000333979
IMUNOTEHNOMED S.R.L.	CUTTING EDGE S.A.S.	Franta	LENTILĂ INTRAOCULARĂ Synthesis Toric CYL+4.50 SPH+28.00 SIPTY450+28.00	DM000333980
IMUNOTEHNOMED S.R.L.	CUTTING EDGE S.A.S.	Franta	LENTILĂ INTRAOCULARĂ Synthesis Toric CYL+5.25 SPH+28.00 SIPTY525+28.00	DM000333981
IMUNOTEHNOMED S.R.L.	CUTTING EDGE S.A.S.	Franta	LENTILĂ INTRAOCULARĂ Synthesis Toric CYL+6.00 SPH+28.00 SIPTY600+28.00	DM000333982
IMUNOTEHNOMED S.R.L.	CUTTING EDGE S.A.S.	Franta	LENTILĂ INTRAOCULARĂ Synthesis Toric CYL+0.75 SPH+28.50 SIPTY075+28.50	DM000333983
IMUNOTEHNOMED S.R.L.	CUTTING EDGE S.A.S.	Franta	LENTILĂ INTRAOCULARĂ Synthesis Toric CYL+1.00 SPH+28.50 SIPTY100+28.50	DM000333984
IMUNOTEHNOMED S.R.L.	CUTTING EDGE S.A.S.	Franta	LENTILĂ INTRAOCULARĂ Synthesis Toric CYL+1.50 SPH+28.50 SIPTY150+28.50	DM000333985
IMUNOTEHNOMED S.R.L.	CUTTING EDGE S.A.S.	Franta	LENTILĂ INTRAOCULARĂ Synthesis Toric CYL+2.25 SPH+28.50 SIPTY225+28.50	DM000333986
IMUNOTEHNOMED S.R.L.	CUTTING EDGE S.A.S.	Franta	LENTILĂ INTRAOCULARĂ Synthesis Toric CYL+3.00 SPH+28.50 SIPTY300+28.50	DM000333987
IMUNOTEHNOMED S.R.L.	CUTTING EDGE S.A.S.	Franta	LENTILĂ INTRAOCULARĂ Synthesis Toric CYL+3.75 SPH+28.50 SIPTY375+28.50	DM000333988
IMUNOTEHNOMED S.R.L.	CUTTING EDGE S.A.S.	Franta	LENTILĂ INTRAOCULARĂ Synthesis Toric CYL+4.50 SPH+28.50 SIPTY450+28.50	DM000333989
IMUNOTEHNOMED S.R.L.	CUTTING EDGE S.A.S.	Franta	LENTILĂ INTRAOCULARĂ Synthesis Toric CYL+5.25 SPH+28.50 SIPTY525+28.50	DM000333990
IMUNOTEHNOMED S.R.L.	CUTTING EDGE S.A.S.	Franta	LENTILĂ INTRAOCULARĂ Synthesis Toric CYL+6.00 SPH+28.50 SIPTY600+28.50	DM000333991

IMUNOTEHNOMED S.R.L.	CUTTING EDGE S.A.S.	Franta	LENTILĂ INTRAOCULARĂ Synthesis Toric CYL+0.75 SPH+29.00 SIPTY075+29.00	DM000333992
IMUNOTEHNOMED S.R.L.	CUTTING EDGE S.A.S.	Franta	LENTILĂ INTRAOCULARĂ Synthesis Toric CYL+1.00 SPH+29.00 SIPTY100+29.00	DM000333993
IMUNOTEHNOMED S.R.L.	CUTTING EDGE S.A.S.	Franta	LENTILĂ INTRAOCULARĂ Synthesis Toric CYL+1.50 SPH+29.00 SIPTY150+29.00	DM000333994
IMUNOTEHNOMED S.R.L.	CUTTING EDGE S.A.S.	Franta	LENTILĂ INTRAOCULARĂ Synthesis Toric CYL+2.25 SPH+29.00 SIPTY225+29.00	DM000333995
IMUNOTEHNOMED S.R.L.	CUTTING EDGE S.A.S.	Franta	LENTILĂ INTRAOCULARĂ Synthesis Toric CYL+3.00 SPH+29.00 SIPTY300+29.00	DM000333996
IMUNOTEHNOMED S.R.L.	CUTTING EDGE S.A.S.	Franta	LENTILĂ INTRAOCULARĂ Synthesis Toric CYL+3.75 SPH+29.00 SIPTY375+29.00	DM000333997
IMUNOTEHNOMED S.R.L.	CUTTING EDGE S.A.S.	Franta	LENTILĂ INTRAOCULARĂ Synthesis Toric CYL+4.50 SPH+29.00 SIPTY450+29.00	DM000333998
IMUNOTEHNOMED S.R.L.	CUTTING EDGE S.A.S.	Franta	LENTILĂ INTRAOCULARĂ Synthesis Toric CYL+5.25 SPH+29.00 SIPTY525+29.00	DM000333999
IMUNOTEHNOMED S.R.L.	CUTTING EDGE S.A.S.	Franta	LENTILĂ INTRAOCULARĂ Synthesis Toric CYL+6.00 SPH+29.00 SIPTY600+29.00	DM000334000
IMUNOTEHNOMED S.R.L.	CUTTING EDGE S.A.S.	Franta	LENTILĂ INTRAOCULARĂ Synthesis Toric CYL+0.75 SPH+29.50 SIPTY075+29.50	DM000334001
IMUNOTEHNOMED S.R.L.	CUTTING EDGE S.A.S.	Franta	LENTILĂ INTRAOCULARĂ Synthesis Toric CYL+1.00 SPH+29.50 SIPTY100+29.50	DM000334002
IMUNOTEHNOMED S.R.L.	CUTTING EDGE S.A.S.	Franta	LENTILĂ INTRAOCULARĂ Synthesis Toric CYL+1.50 SPH+29.50 SIPTY150+29.50	DM000334003
IMUNOTEHNOMED S.R.L.	CUTTING EDGE S.A.S.	Franta	LENTILĂ INTRAOCULARĂ Synthesis Toric CYL+2.25 SPH+29.50 SIPTY225+29.50	DM000334004
IMUNOTEHNOMED S.R.L.	CUTTING EDGE S.A.S.	Franta	LENTILĂ INTRAOCULARĂ Synthesis Toric CYL+3.00 SPH+29.50 SIPTY300+29.50	DM000334005
IMUNOTEHNOMED S.R.L.	CUTTING EDGE S.A.S.	Franta	LENTILĂ INTRAOCULARĂ Synthesis Toric CYL+3.75 SPH+29.50 SIPTY375+29.50	DM000334006
IMUNOTEHNOMED S.R.L.	CUTTING EDGE S.A.S.	Franta	LENTILĂ INTRAOCULARĂ Synthesis Toric CYL+4.50 SPH+29.50 SIPTY450+29.50	DM000334007
IMUNOTEHNOMED S.R.L.	CUTTING EDGE S.A.S.	Franta	LENTILĂ INTRAOCULARĂ Synthesis Toric CYL+5.25 SPH+29.50 SIPTY525+29.50	DM000334008
IMUNOTEHNOMED S.R.L.	CUTTING EDGE S.A.S.	Franta	LENTILĂ INTRAOCULARĂ Synthesis Toric CYL+6.00 SPH+29.50 SIPTY600+29.50	DM000334009
IMUNOTEHNOMED S.R.L.	CUTTING EDGE S.A.S.	Franta	LENTILĂ INTRAOCULARĂ Synthesis Toric CYL+0.75 SPH+30.00 SIPTY075+30.00	DM000334010
IMUNOTEHNOMED S.R.L.	CUTTING EDGE S.A.S.	Franta	LENTILĂ INTRAOCULARĂ Synthesis Toric CYL+1.00 SPH+30.00 SIPTY100+30.00	DM000334011
IMUNOTEHNOMED S.R.L.	CUTTING EDGE S.A.S.	Franta	LENTILĂ INTRAOCULARĂ Synthesis Toric CYL+1.50 SPH+30.00 SIPTY150+30.00	DM000334012
IMUNOTEHNOMED S.R.L.	CUTTING EDGE S.A.S.	Franta	LENTILĂ INTRAOCULARĂ Synthesis Toric CYL+2.25 SPH+30.00 SIPTY225+30.00	DM000334013
IMUNOTEHNOMED S.R.L.	CUTTING EDGE S.A.S.	Franta	LENTILĂ INTRAOCULARĂ Synthesis Toric CYL+3.00 SPH+30.00 SIPTY300+30.00	DM000334014
IMUNOTEHNOMED S.R.L.	CUTTING EDGE S.A.S.	Franta	LENTILĂ INTRAOCULARĂ Synthesis Toric CYL+3.75 SPH+30.00 SIPTY375+30.00	DM000334015
IMUNOTEHNOMED S.R.L.	CUTTING EDGE S.A.S.	Franta	LENTILĂ INTRAOCULARĂ Synthesis Toric CYL+4.50 SPH+30.00 SIPTY450+30.00	DM000334016
IMUNOTEHNOMED S.R.L.	CUTTING EDGE S.A.S.	Franta	LENTILĂ INTRAOCULARĂ Synthesis Toric CYL+5.25 SPH+30.00 SIPTY525+30.00	DM000334017
IMUNOTEHNOMED S.R.L.	CUTTING EDGE S.A.S.	Franta	LENTILĂ INTRAOCULARĂ Synthesis Toric CYL+6.00 SPH+30.00 SIPTY600+30.00	DM000334018
IMUNOTEHNOMED S.R.L.	CUTTING EDGE S.A.S.	Franta	LENTILĂ INTRAOCULARĂ Synthesis Toric CYL+0.75 SPH+31.00 SIPTY075+31.00	DM000334019
IMUNOTEHNOMED S.R.L.	CUTTING EDGE S.A.S.	Franta	LENTILĂ INTRAOCULARĂ Synthesis Toric CYL+1.00 SPH+31.00 SIPTY100+31.00	DM000334020
IMUNOTEHNOMED S.R.L.	CUTTING EDGE S.A.S.	Franta	LENTILĂ INTRAOCULARĂ Synthesis Toric CYL+1.50 SPH+31.00 SIPTY150+31.00	DM000334021
IMUNOTEHNOMED S.R.L.	CUTTING EDGE S.A.S.	Franta	LENTILĂ INTRAOCULARĂ Synthesis Toric CYL+2.25 SPH+31.00 SIPTY225+31.00	DM000334022
IMUNOTEHNOMED S.R.L.	CUTTING EDGE S.A.S.	Franta	LENTILĂ INTRAOCULARĂ Synthesis Toric CYL+3.00 SPH+31.00 SIPTY300+31.00	DM000334023
IMUNOTEHNOMED S.R.L.	CUTTING EDGE S.A.S.	Franta	LENTILĂ INTRAOCULARĂ Synthesis Toric CYL+3.75 SPH+31.00 SIPTY375+31.00	DM000334024

IMUNOTEHNOMED S.R.L.	CUTTING EDGE S.A.S.	Franta	LENTILĂ INTRAOCULARĂ Synthesis Toric CYL+4.50 SPH+31.00 SIPTY450+31.00	DM000334025
IMUNOTEHNOMED S.R.L.	CUTTING EDGE S.A.S.	Franta	LENTILĂ INTRAOCULARĂ Synthesis Toric CYL+5.25 SPH+31.00 SIPTY525+31.00	DM000334026
IMUNOTEHNOMED S.R.L.	CUTTING EDGE S.A.S.	Franta	LENTILĂ INTRAOCULARĂ Synthesis Toric CYL+6.00 SPH+31.00 SIPTY600+31.00	DM000334027
IMUNOTEHNOMED S.R.L.	CUTTING EDGE S.A.S.	Franta	LENTILĂ INTRAOCULARĂ Synthesis Toric CYL+0.75 SPH+32.00 SIPTY075+32.00	DM000334028
IMUNOTEHNOMED S.R.L.	CUTTING EDGE S.A.S.	Franta	LENTILĂ INTRAOCULARĂ Synthesis Toric CYL+1.00 SPH+32.00 SIPTY100+32.00	DM000334029
IMUNOTEHNOMED S.R.L.	CUTTING EDGE S.A.S.	Franta	LENTILĂ INTRAOCULARĂ Synthesis Toric CYL+1.50 SPH+32.00 SIPTY150+32.00	DM000334030
IMUNOTEHNOMED S.R.L.	CUTTING EDGE S.A.S.	Franta	LENTILĂ INTRAOCULARĂ Synthesis Toric CYL+2.25 SPH+32.00 SIPTY225+32.00	DM000334031
IMUNOTEHNOMED S.R.L.	CUTTING EDGE S.A.S.	Franta	LENTILĂ INTRAOCULARĂ Synthesis Toric CYL+3.00 SPH+32.00 SIPTY300+32.00	DM000334032
IMUNOTEHNOMED S.R.L.	CUTTING EDGE S.A.S.	Franta	LENTILĂ INTRAOCULARĂ Synthesis Toric CYL+3.75 SPH+32.00 SIPTY375+32.00	DM000334033
IMUNOTEHNOMED S.R.L.	CUTTING EDGE S.A.S.	Franta	LENTILĂ INTRAOCULARĂ Synthesis Toric CYL+4.50 SPH+32.00 SIPTY450+32.00	DM000334034
IMUNOTEHNOMED S.R.L.	CUTTING EDGE S.A.S.	Franta	LENTILĂ INTRAOCULARĂ Synthesis Toric CYL+5.25 SPH+32.00 SIPTY525+32.00	DM000334035
IMUNOTEHNOMED S.R.L.	CUTTING EDGE S.A.S.	Franta	LENTILĂ INTRAOCULARĂ Synthesis Toric CYL+6.00 SPH+32.00 SIPTY600+32.00	DM000334036

LISTA
dispozitivelor medicale înregistrate în Republica Moldova

Ordin de înregistrare nr.Rg04-000016 din 19.01.2022

Reprezentantul	Producatorul	Țara	Denumirea dispozitivului medical	Nr. de înreg.
IMUNOTEHNOMED S.R.L.	CUTTING EDGE S.A.S.	Franta	LENTILĂ INTRAOCULARĂ Synthesis Hydrophilic Stand Alone +00.00D SISA+00.00D	DM000332909
IMUNOTEHNOMED S.R.L.	CUTTING EDGE S.A.S.	Franta	LENTILĂ INTRAOCULARĂ Synthesis Hydrophilic Stand Alone +01.00D SISA+01.00D	DM000332910
IMUNOTEHNOMED S.R.L.	CUTTING EDGE S.A.S.	Franta	LENTILĂ INTRAOCULARĂ Synthesis Hydrophilic Stand Alone +02.00D SISA+02.00D	DM000332911
IMUNOTEHNOMED S.R.L.	CUTTING EDGE S.A.S.	Franta	LENTILĂ INTRAOCULARĂ Synthesis Hydrophilic Stand Alone +03.00D SISA+03.00D	DM000332912
IMUNOTEHNOMED S.R.L.	CUTTING EDGE S.A.S.	Franta	LENTILĂ INTRAOCULARĂ Synthesis Hydrophilic Stand Alone +04.00D SISA+04.00D	DM000332913
IMUNOTEHNOMED S.R.L.	CUTTING EDGE S.A.S.	Franta	LENTILĂ INTRAOCULARĂ Synthesis Hydrophilic Stand Alone +05.00D SISA+05.00D	DM000332914
IMUNOTEHNOMED S.R.L.	CUTTING EDGE S.A.S.	Franta	LENTILĂ INTRAOCULARĂ Synthesis Hydrophilic Stand Alone +06.00D SISA+06.00D	DM000332915
IMUNOTEHNOMED S.R.L.	CUTTING EDGE S.A.S.	Franta	LENTILĂ INTRAOCULARĂ Synthesis Hydrophilic Stand Alone +07.00D SISA+07.00D	DM000332916
IMUNOTEHNOMED S.R.L.	CUTTING EDGE S.A.S.	Franta	LENTILĂ INTRAOCULARĂ Synthesis Hydrophilic Stand Alone +08.00D SISA+08.00D	DM000332917
IMUNOTEHNOMED S.R.L.	CUTTING EDGE S.A.S.	Franta	LENTILĂ INTRAOCULARĂ Synthesis Hydrophilic Stand Alone +09.00D SISA+09.00D	DM000332918
IMUNOTEHNOMED S.R.L.	CUTTING EDGE S.A.S.	Franta	LENTILĂ INTRAOCULARĂ Synthesis Hydrophilic Stand Alone +10.00D SISA+10.00D	DM000332919
IMUNOTEHNOMED S.R.L.	CUTTING EDGE S.A.S.	Franta	LENTILĂ INTRAOCULARĂ Synthesis Hydrophilic Stand Alone +10.50D SISA+10.50D	DM000332920
IMUNOTEHNOMED S.R.L.	CUTTING EDGE S.A.S.	Franta	LENTILĂ INTRAOCULARĂ Synthesis Hydrophilic Stand Alone +11.00D SISA+11.00D	DM000332921
IMUNOTEHNOMED S.R.L.	CUTTING EDGE S.A.S.	Franta	LENTILĂ INTRAOCULARĂ Synthesis Hydrophilic Stand Alone +11.50D SISA+11.50D	DM000332922
IMUNOTEHNOMED S.R.L.	CUTTING EDGE S.A.S.	Franta	LENTILĂ INTRAOCULARĂ Synthesis Hydrophilic Stand Alone +12.00D SISA+12.00D	DM000332923
IMUNOTEHNOMED S.R.L.	CUTTING EDGE S.A.S.	Franta	LENTILĂ INTRAOCULARĂ Synthesis Hydrophilic Stand Alone +12.50D SISA+12.50D	DM000332924
IMUNOTEHNOMED S.R.L.	CUTTING EDGE S.A.S.	Franta	LENTILĂ INTRAOCULARĂ Synthesis Hydrophilic Stand Alone +13.00D SISA+13.00D	DM000332925
IMUNOTEHNOMED S.R.L.	CUTTING EDGE S.A.S.	Franta	LENTILĂ INTRAOCULARĂ Synthesis Hydrophilic Stand Alone +13.50D SISA+13.50D	DM000332926
IMUNOTEHNOMED S.R.L.	CUTTING EDGE S.A.S.	Franta	LENTILĂ INTRAOCULARĂ Synthesis Hydrophilic Stand Alone +14.00D SISA+14.00D	DM000332927
IMUNOTEHNOMED S.R.L.	CUTTING EDGE S.A.S.	Franta	LENTILĂ INTRAOCULARĂ Synthesis Hydrophilic Stand Alone +14.50D SISA+14.50D	DM000332928
IMUNOTEHNOMED S.R.L.	CUTTING EDGE S.A.S.	Franta	LENTILĂ INTRAOCULARĂ Synthesis Hydrophilic Stand Alone +15.00D SISA+15.00D	DM000332929
IMUNOTEHNOMED S.R.L.	CUTTING EDGE S.A.S.	Franta	LENTILĂ INTRAOCULARĂ Synthesis Hydrophilic Stand Alone +15.50D SISA+15.50D	DM000332930
IMUNOTEHNOMED S.R.L.	CUTTING EDGE S.A.S.	Franta	LENTILĂ INTRAOCULARĂ Synthesis Hydrophilic Stand Alone +16.00D SISA+16.00D	DM000332931
IMUNOTEHNOMED S.R.L.	CUTTING EDGE S.A.S.	Franta	LENTILĂ INTRAOCULARĂ Synthesis Hydrophilic Stand Alone +16.50D SISA+16.50D	DM000332932
IMUNOTEHNOMED S.R.L.	CUTTING EDGE S.A.S.	Franta	LENTILĂ INTRAOCULARĂ Synthesis Hydrophilic Stand Alone +17.00D SISA+17.00D	DM000332933
IMUNOTEHNOMED S.R.L.	CUTTING EDGE S.A.S.	Franta	LENTILĂ INTRAOCULARĂ Synthesis Hydrophilic Stand Alone +17.50D SISA+17.50D	DM000332934
IMUNOTEHNOMED S.R.L.	CUTTING EDGE S.A.S.	Franta	LENTILĂ INTRAOCULARĂ Synthesis Hydrophilic Stand Alone +18.00D SISA+18.00D	DM000332935

IMUNOTEHNOMED S.R.L.	CUTTING EDGE S.A.S.	Franta	LENTILĂ INTRAOCULARĂ Synthesis Hydrophilic Stand Alone +18.50D SISA+18.50D	DM000332936
IMUNOTEHNOMED S.R.L.	CUTTING EDGE S.A.S.	Franta	LENTILĂ INTRAOCULARĂ Synthesis Hydrophilic Stand Alone +19.00D SISA+19.00D	DM000332937
IMUNOTEHNOMED S.R.L.	CUTTING EDGE S.A.S.	Franta	LENTILĂ INTRAOCULARĂ Synthesis Hydrophilic Stand Alone +19.50D SISA+19.50D	DM000332938
IMUNOTEHNOMED S.R.L.	CUTTING EDGE S.A.S.	Franta	LENTILĂ INTRAOCULARĂ Synthesis Hydrophilic Stand Alone +20.00D SISA+20.00D	DM000332939
IMUNOTEHNOMED S.R.L.	CUTTING EDGE S.A.S.	Franta	LENTILĂ INTRAOCULARĂ Synthesis Hydrophilic Stand Alone +20.50D SISA+20.50D	DM000332940
IMUNOTEHNOMED S.R.L.	CUTTING EDGE S.A.S.	Franta	LENTILĂ INTRAOCULARĂ Synthesis Hydrophilic Stand Alone +21.00D SISA+21.00D	DM000332941
IMUNOTEHNOMED S.R.L.	CUTTING EDGE S.A.S.	Franta	LENTILĂ INTRAOCULARĂ Synthesis Hydrophilic Stand Alone +21.50D SISA+21.50D	DM000332942
IMUNOTEHNOMED S.R.L.	CUTTING EDGE S.A.S.	Franta	LENTILĂ INTRAOCULARĂ Synthesis Hydrophilic Stand Alone +22.00D SISA+22.00D	DM000332943
IMUNOTEHNOMED S.R.L.	CUTTING EDGE S.A.S.	Franta	LENTILĂ INTRAOCULARĂ Synthesis Hydrophilic Stand Alone +22.50D SISA+22.50D	DM000332944
IMUNOTEHNOMED S.R.L.	CUTTING EDGE S.A.S.	Franta	LENTILĂ INTRAOCULARĂ Synthesis Hydrophilic Stand Alone +23.00D SISA+23.00D	DM000332945
IMUNOTEHNOMED S.R.L.	CUTTING EDGE S.A.S.	Franta	LENTILĂ INTRAOCULARĂ Synthesis Hydrophilic Stand Alone +23.50D SISA+23.50D	DM000332946
IMUNOTEHNOMED S.R.L.	CUTTING EDGE S.A.S.	Franta	LENTILĂ INTRAOCULARĂ Synthesis Hydrophilic Stand Alone +24.00D SISA+24.00D	DM000332947
IMUNOTEHNOMED S.R.L.	CUTTING EDGE S.A.S.	Franta	LENTILĂ INTRAOCULARĂ Synthesis Hydrophilic Stand Alone +24.50D SISA+24.50D	DM000332948
IMUNOTEHNOMED S.R.L.	CUTTING EDGE S.A.S.	Franta	LENTILĂ INTRAOCULARĂ Synthesis Hydrophilic Stand Alone +25.00D SISA+25.00D	DM000332949
IMUNOTEHNOMED S.R.L.	CUTTING EDGE S.A.S.	Franta	LENTILĂ INTRAOCULARĂ Synthesis Hydrophilic Stand Alone +25.50D SISA+25.50D	DM000332950
IMUNOTEHNOMED S.R.L.	CUTTING EDGE S.A.S.	Franta	LENTILĂ INTRAOCULARĂ Synthesis Hydrophilic Stand Alone +26.00D SISA+26.00D	DM000332951
IMUNOTEHNOMED S.R.L.	CUTTING EDGE S.A.S.	Franta	LENTILĂ INTRAOCULARĂ Synthesis Hydrophilic Stand Alone +26.50D SISA+26.50D	DM000332952
IMUNOTEHNOMED S.R.L.	CUTTING EDGE S.A.S.	Franta	LENTILĂ INTRAOCULARĂ Synthesis Hydrophilic Stand Alone +27.00D SISA+27.00D	DM000332953
IMUNOTEHNOMED S.R.L.	CUTTING EDGE S.A.S.	Franta	LENTILĂ INTRAOCULARĂ Synthesis Hydrophilic Stand Alone +27.50D SISA+27.50D	DM000332954
IMUNOTEHNOMED S.R.L.	CUTTING EDGE S.A.S.	Franta	LENTILĂ INTRAOCULARĂ Synthesis Hydrophilic Stand Alone +28.00D SISA+28.00D	DM000332955
IMUNOTEHNOMED S.R.L.	CUTTING EDGE S.A.S.	Franta	LENTILĂ INTRAOCULARĂ Synthesis Hydrophilic Stand Alone +28.50D SISA+28.50D	DM000332956
IMUNOTEHNOMED S.R.L.	CUTTING EDGE S.A.S.	Franta	LENTILĂ INTRAOCULARĂ Synthesis Hydrophilic Stand Alone +29.00D SISA+29.00D	DM000332957
IMUNOTEHNOMED S.R.L.	CUTTING EDGE S.A.S.	Franta	LENTILĂ INTRAOCULARĂ Synthesis Hydrophilic Stand Alone +29.50D SISA+29.50D	DM000332958
IMUNOTEHNOMED S.R.L.	CUTTING EDGE S.A.S.	Franta	LENTILĂ INTRAOCULARĂ Synthesis Hydrophilic Stand Alone +30.00D SISA+30.00D	DM000332959
IMUNOTEHNOMED S.R.L.	CUTTING EDGE S.A.S.	Franta	LENTILĂ INTRAOCULARĂ Synthesis Hydrophilic Stand Alone Yellow +00.00D SISAY+00.00D	DM000332960
IMUNOTEHNOMED S.R.L.	CUTTING EDGE S.A.S.	Franta	LENTILĂ INTRAOCULARĂ Synthesis Hydrophilic Stand Alone Yellow +01.00D SISAY+01.00D	DM000332961
IMUNOTEHNOMED S.R.L.	CUTTING EDGE S.A.S.	Franta	LENTILĂ INTRAOCULARĂ Synthesis Hydrophilic Stand Alone Yellow +02.00D SISAY+02.00D	DM000332962
IMUNOTEHNOMED S.R.L.	CUTTING EDGE S.A.S.	Franta	LENTILĂ INTRAOCULARĂ Synthesis Hydrophilic Stand Alone Yellow +03.00D SISAY+03.00D	DM000332963
IMUNOTEHNOMED S.R.L.	CUTTING EDGE S.A.S.	Franta	LENTILĂ INTRAOCULARĂ Synthesis Hydrophilic Stand Alone Yellow +04.00D SISAY+04.00D	DM000332964
IMUNOTEHNOMED S.R.L.	CUTTING EDGE S.A.S.	Franta	LENTILĂ INTRAOCULARĂ Synthesis Hydrophilic Stand Alone Yellow +05.00D SISAY+05.00D	DM000332965
IMUNOTEHNOMED S.R.L.	CUTTING EDGE S.A.S.	Franta	LENTILĂ INTRAOCULARĂ Synthesis Hydrophilic Stand Alone Yellow +06.00D SISAY+06.00D	DM000332966
IMUNOTEHNOMED S.R.L.	CUTTING EDGE S.A.S.	Franta	LENTILĂ INTRAOCULARĂ Synthesis Hydrophilic Stand Alone Yellow +07.00D SISAY+07.00D	DM000332967
IMUNOTEHNOMED S.R.L.	CUTTING EDGE S.A.S.	Franta	LENTILĂ INTRAOCULARĂ Synthesis Hydrophilic Stand Alone Yellow +08.00D SISAY+08.00D	DM000332968

IMUNOTEHNOMED S.R.L.	CUTTING EDGE S.A.S.	Franta	LENTILĂ INTRAOCULARĂ Synthesis Hydrophilic Stand Alone Yellow +09.00D SISAY+09.00D	DM000332969
IMUNOTEHNOMED S.R.L.	CUTTING EDGE S.A.S.	Franta	LENTILĂ INTRAOCULARĂ Synthesis Hydrophilic Stand Alone Yellow +10.00D SISAY+10.00D	DM000332970
IMUNOTEHNOMED S.R.L.	CUTTING EDGE S.A.S.	Franta	LENTILĂ INTRAOCULARĂ Synthesis Hydrophilic Stand Alone Yellow +10.50D SISAY+10.50D	DM000332971
IMUNOTEHNOMED S.R.L.	CUTTING EDGE S.A.S.	Franta	LENTILĂ INTRAOCULARĂ Synthesis Hydrophilic Stand Alone Yellow +11.00D SISAY+11.00D	DM000332972
IMUNOTEHNOMED S.R.L.	CUTTING EDGE S.A.S.	Franta	LENTILĂ INTRAOCULARĂ Synthesis Hydrophilic Stand Alone Yellow +11.50D SISAY+11.50D	DM000332973
IMUNOTEHNOMED S.R.L.	CUTTING EDGE S.A.S.	Franta	LENTILĂ INTRAOCULARĂ Synthesis Hydrophilic Stand Alone Yellow +12.00D SISAY+12.00D	DM000332974
IMUNOTEHNOMED S.R.L.	CUTTING EDGE S.A.S.	Franta	LENTILĂ INTRAOCULARĂ Synthesis Hydrophilic Stand Alone Yellow +12.50D SISAY+12.50D	DM000332975
IMUNOTEHNOMED S.R.L.	CUTTING EDGE S.A.S.	Franta	LENTILĂ INTRAOCULARĂ Synthesis Hydrophilic Stand Alone Yellow +13.00D SISAY+13.00D	DM000332976
IMUNOTEHNOMED S.R.L.	CUTTING EDGE S.A.S.	Franta	LENTILĂ INTRAOCULARĂ Synthesis Hydrophilic Stand Alone Yellow +13.DOD SISAY+13.50D	DM000332977
IMUNOTEHNOMED S.R.L.	CUTTING EDGE S.A.S.	Franta	LENTILĂ INTRAOCULARĂ Synthesis Hydrophilic Stand Alone Yellow +14.00D SISAY+14.00D	DM000332978
IMUNOTEHNOMED S.R.L.	CUTTING EDGE S.A.S.	Franta	LENTILĂ INTRAOCULARĂ Synthesis Hydrophilic Stand Alone Yellow +14.50D SISAY+14.50D	DM000332979
IMUNOTEHNOMED S.R.L.	CUTTING EDGE S.A.S.	Franta	LENTILĂ INTRAOCULARĂ Synthesis Hydrophilic Stand Alone Yellow +15.00D SISAY+15.00D	DM000332980
IMUNOTEHNOMED S.R.L.	CUTTING EDGE S.A.S.	Franta	LENTILĂ INTRAOCULARĂ Synthesis Hydrophilic Stand Alone Yellow +15.50D SISAY+15.50D	DM000332981
IMUNOTEHNOMED S.R.L.	CUTTING EDGE S.A.S.	Franta	LENTILĂ INTRAOCULARĂ Synthesis Hydrophilic Stand Alone Yellow +16.00D SISAY+16.00D	DM000332982
IMUNOTEHNOMED S.R.L.	CUTTING EDGE S.A.S.	Franta	LENTILĂ INTRAOCULARĂ Synthesis Hydrophilic Stand Alone Yellow +16.50D SISAY+16.50D	DM000332983
IMUNOTEHNOMED S.R.L.	CUTTING EDGE S.A.S.	Franta	LENTILĂ INTRAOCULARĂ Synthesis Hydrophilic Stand Alone Yellow +17.0OD SISAY+17.00D	DM000332984
IMUNOTEHNOMED S.R.L.	CUTTING EDGE S.A.S.	Franta	LENTILĂ INTRAOCULARĂ Synthesis Hydrophilic Stand Alone Yellow +17.50D SISAY+17.50D	DM000332985
IMUNOTEHNOMED S.R.L.	CUTTING EDGE S.A.S.	Franta	LENTILĂ INTRAOCULARĂ Synthesis Hydrophilic Stand Alone Yellow +18.00D SISAY+18.00D	DM000332986
IMUNOTEHNOMED S.R.L.	CUTTING EDGE S.A.S.	Franta	LENTILĂ INTRAOCULARĂ Synthesis Hydrophilic Stand Alone Yellow +18.50D SISAY+18.50D	DM000332987
IMUNOTEHNOMED S.R.L.	CUTTING EDGE S.A.S.	Franta	LENTILĂ INTRAOCULARĂ Synthesis Hydrophilic Stand Alone Yellow +19.00D SISAY+19.00D	DM000332988
IMUNOTEHNOMED S.R.L.	CUTTING EDGE S.A.S.	Franta	LENTILĂ INTRAOCULARĂ Synthesis Hydrophilic Stand Alone Yellow +19.50D SISAY+19.50D	DM000332989
IMUNOTEHNOMED S.R.L.	CUTTING EDGE S.A.S.	Franta	LENTILĂ INTRAOCULARĂ Synthesis Hydrophilic Stand Alone Yellow +20.00D SISAY+20.00D	DM000332990
IMUNOTEHNOMED S.R.L.	CUTTING EDGE S.A.S.	Franta	LENTILĂ INTRAOCULARĂ Synthesis Hydrophilic Stand Alone Yellow +20.50D SISAY+20.50D	DM000332991
IMUNOTEHNOMED S.R.L.	CUTTING EDGE S.A.S.	Franta	LENTILĂ INTRAOCULARĂ Synthesis Hydrophilic Stand Alone Yellow +21.00D SISAY+21.00D	DM000332992
IMUNOTEHNOMED S.R.L.	CUTTING EDGE S.A.S.	Franta	LENTILĂ INTRAOCULARĂ Synthesis Hydrophilic Stand Alone Yellow +21.50D SISAY+21.50D	DM000332993
IMUNOTEHNOMED S.R.L.	CUTTING EDGE S.A.S.	Franta	LENTILĂ INTRAOCULARĂ Synthesis Hydrophilic Stand Alone Yellow +22.00D SISAY+22.00D	DM000332994
IMUNOTEHNOMED S.R.L.	CUTTING EDGE S.A.S.	Franta	LENTILĂ INTRAOCULARĂ Synthesis Hydrophilic Stand Alone Yellow +22.50D SISAY+22.50D	DM000332995
IMUNOTEHNOMED S.R.L.	CUTTING EDGE S.A.S.	Franta	LENTILĂ INTRAOCULARĂ Synthesis Hydrophilic Stand Alone Yellow +23.00D SISAY+23.00D	DM000332996
IMUNOTEHNOMED S.R.L.	CUTTING EDGE S.A.S.	Franta	LENTILĂ INTRAOCULARĂ Synthesis Hydrophilic Stand Alone Yellow +23.50D SlSAY+23.50D	DM000332997
IMUNOTEHNOMED S.R.L.	CUTTING EDGE S.A.S.	Franta	LENTILĂ INTRAOCULARĂ Synthesis Hydrophilic Stand Alone Yellow +24.00D SISAY+24.00D	DM000332998
IMUNOTEHNOMED S.R.L.	CUTTING EDGE S.A.S.	Franta	LENTILĂ INTRAOCULARĂ Synthesis Hydrophilic Stand Alone Yellow +24.50D SISAY+24.50D	DM000332999
IMUNOTEHNOMED S.R.L.	CUTTING EDGE S.A.S.	Franta	LENTILĂ INTRAOCULARĂ Synthesis Hydrophilic Stand Alone Yellow +25.00D SISAY+25.00D	DM000333000
IMUNOTEHNOMED S.R.L.	CUTTING EDGE S.A.S.	Franta	LENTILĂ INTRAOCULARĂ Synthesis Hydrophilic Stand Alone Yellow +25.50D SISAY+25.50D	DM000333001

IMUNOTEHNOMED S.R.L.	CUTTING EDGE S.A.S.	Franta	LENTILĂ INTRAOCULARĂ Synthesis Hydrophilic Stand Alone Yellow +26.00D SISAY+26.00D	DM000333002
IMUNOTEHNOMED S.R.L.	CUTTING EDGE S.A.S.	Franta	LENTILĂ INTRAOCULARĂ Synthesis Hydrophilic Stand Alone Yellow +26.50D SISAY+26.50D	DM000333003
IMUNOTEHNOMED S.R.L.	CUTTING EDGE S.A.S.	Franta	LENTILĂ INTRAOCULARĂ Synthesis Hydrophilic Stand Alone Yellow +27.00D SISAY+27.00D	DM000333004
IMUNOTEHNOMED S.R.L.	CUTTING EDGE S.A.S.	Franta	LENTILĂ INTRAOCULARĂ Synthesis Hydrophilic Stand Alone Yellow +27.50D SISAY+27.50D	DM000333005
IMUNOTEHNOMED S.R.L.	CUTTING EDGE S.A.S.	Franta	LENTILĂ INTRAOCULARĂ Synthesis Hydrophilic Stand Alone Yellow +28.00D SISAY+28.00D	DM000333006
IMUNOTEHNOMED S.R.L.	CUTTING EDGE S.A.S.	Franta	LENTILĂ INTRAOCULARĂ Synthesis Hydrophilic Stand Alone Yellow +28.50D SISAY+28.50D	DM000333007
IMUNOTEHNOMED S.R.L.	CUTTING EDGE S.A.S.	Franta	LENTILĂ INTRAOCULARĂ Synthesis Hydrophilic Stand Alone Yellow +29.00D SISAY+29.00D	DM000333008
IMUNOTEHNOMED S.R.L.	CUTTING EDGE S.A.S.	Franta	LENTILĂ INTRAOCULARĂ Synthesis Hydrophilic Stand Alone Yellow +29.50D SISAY+29.50D	DM000333009
IMUNOTEHNOMED S.R.L.	CUTTING EDGE S.A.S.	Franta	LENTILĂ INTRAOCULARĂ Synthesis Hydrophilic Stand Alone Yellow +30.00D SISAY+30.00D	DM000333010
IMUNOTEHNOMED S.R.L.	CUTTING EDGE S.A.S.	Franta	LENTILĂ INTRAOCULARĂ Synthesis Hydrophilic Preloaded -10.00D SIP-10.00D	DM000333011
IMUNOTEHNOMED S.R.L.	CUTTING EDGE S.A.S.	Franta	LENTILĂ INTRAOCULARĂ Synthesis Hydrophilic Preloaded -09.00D SIP-09.00D	DM000333012
IMUNOTEHNOMED S.R.L.	CUTTING EDGE S.A.S.	Franta	LENTILĂ INTRAOCULARĂ Synthesis Hydrophilic Preloaded -08.00D SIP-08.00D	DM000333013
IMUNOTEHNOMED S.R.L.	CUTTING EDGE S.A.S.	Franta	LENTILĂ INTRAOCULARĂ Synthesis Hydrophilic Preloaded -07.00D SIP-07.00D	DM000333014
IMUNOTEHNOMED S.R.L.	CUTTING EDGE S.A.S.	Franta	LENTILĂ INTRAOCULARĂ Synthesis Hydrophilic Preloaded -06.00D SIP-06.00D	DM000333015
IMUNOTEHNOMED S.R.L.	CUTTING EDGE S.A.S.	Franta	LENTILĂ INTRAOCULARĂ Synthesis Hydrophilic Preloaded -05.00D SIP-05.00D	DM000333016
IMUNOTEHNOMED S.R.L.	CUTTING EDGE S.A.S.	Franta	LENTILĂ INTRAOCULARĂ Synthesis Hydrophilic Preloaded -04.00D SIP-04.00D	DM000333017
IMUNOTEHNOMED S.R.L.	CUTTING EDGE S.A.S.	Franta	LENTILĂ INTRAOCULARĂ Synthesis Hydrophilic Preloaded -03.00D SIP-03.00D	DM000333018
IMUNOTEHNOMED S.R.L.	CUTTING EDGE S.A.S.	Franta	LENTILĂ INTRAOCULARĂ Synthesis Hydrophilic Preloaded -02.00D SIP-02.00D	DM000333019
IMUNOTEHNOMED S.R.L.	CUTTING EDGE S.A.S.	Franta	LENTILĂ INTRAOCULARĂ Synthesis Hydrophilic Preloaded -01.00D SIP-01.00D	DM000333020
IMUNOTEHNOMED S.R.L.	CUTTING EDGE S.A.S.	Franta	LENTILĂ INTRAOCULARĂ Synthesis Hydrophilic Preloaded +00.00D SIP+00.00D	DM000333021
IMUNOTEHNOMED S.R.L.	CUTTING EDGE S.A.S.	Franta	LENTILĂ INTRAOCULARĂ Synthesis Hydrophilic Preloaded+01.00D SIP+01.00D	DM000333022
IMUNOTEHNOMED S.R.L.	CUTTING EDGE S.A.S.	Franta	LENTILĂ INTRAOCULARĂ Synthesis Hydrophilic Preloaded+02.00D SIP+02.00D	DM000333023
IMUNOTEHNOMED S.R.L.	CUTTING EDGE S.A.S.	Franta	LENTILĂ INTRAOCULARĂ Synthesis Hydrophilic Preloaded+03.00D SIP+03.00D	DM000333024
IMUNOTEHNOMED S.R.L.	CUTTING EDGE S.A.S.	Franta	LENTILĂ INTRAOCULARĂ Synthesis Hydrophilic Preloaded+04.00D SIP+04.00D	DM000333025
IMUNOTEHNOMED S.R.L.	CUTTING EDGE S.A.S.	Franta	LENTILĂ INTRAOCULARĂ Synthesis Hydrophilic Preloaded+05.00D SIP+05.00D	DM000333026
IMUNOTEHNOMED S.R.L.	CUTTING EDGE S.A.S.	Franta	LENTILĂ INTRAOCULARĂ Synthesis Hydrophilic Preloaded+06.00D SIP+06.00D	DM000333027
IMUNOTEHNOMED S.R.L.	CUTTING EDGE S.A.S.	Franta	LENTILĂ INTRAOCULARĂ Synthesis Hydrophilic Preloaded+07.00D SIP+07.00D	DM000333028
IMUNOTEHNOMED S.R.L.	CUTTING EDGE S.A.S.	Franta	LENTILĂ INTRAOCULARĂ Synthesis Hydrophilic Preloaded+08.00D SIP+08.00D	DM000333029
IMUNOTEHNOMED S.R.L.	CUTTING EDGE S.A.S.	Franta	LENTILĂ INTRAOCULARĂ Synthesis Hydrophilic Preloaded+09.00D SIP+09.00D	DM000333030
IMUNOTEHNOMED S.R.L.	CUTTING EDGE S.A.S.	Franta	LENTILĂ INTRAOCULARĂ Synthesis Hydrophilic Preloaded+10.00D SIP+10.00D	DM000333031
IMUNOTEHNOMED S.R.L.	CUTTING EDGE S.A.S.	Franta	LENTILĂ INTRAOCULARĂ Synthesis Hydrophilic Preloaded+10.50D SIP+10.50D	DM000333032
IMUNOTEHNOMED S.R.L.	CUTTING EDGE S.A.S.	Franta	LENTILĂ INTRAOCULARĂ Synthesis Hydrophilic Preloaded+11.00D SIP+11.00D	DM000333033
IMUNOTEHNOMED S.R.L.	CUTTING EDGE S.A.S.	Franta	LENTILĂ INTRAOCULARĂ Synthesis Hydrophilic Preloaded+11.50D SIP+11.50D	DM000333034

IMUNOTEHNOMED S.R.L.	CUTTING EDGE S.A.S.	Franta	LENTILĂ INTRAOCULARĂ Synthesis Hydrophilic Preloaded+12.00D SIP+12.00D	DM000333035
IMUNOTEHNOMED S.R.L.	CUTTING EDGE S.A.S.	Franta	LENTILĂ INTRAOCULARĂ Synthesis Hydrophilic Preloaded+12.50D SIP+12.50D	DM000333036
IMUNOTEHNOMED S.R.L.	CUTTING EDGE S.A.S.	Franta	LENTILĂ INTRAOCULARĂ Synthesis Hydrophilic Preloaded+13.00D SIP+13.00D	DM000333037
IMUNOTEHNOMED S.R.L.	CUTTING EDGE S.A.S.	Franta	LENTILĂ INTRAOCULARĂ Synthesis Hydrophilic Preloaded+13.50D SIP+13.50D	DM000333038
IMUNOTEHNOMED S.R.L.	CUTTING EDGE S.A.S.	Franta	LENTILĂ INTRAOCULARĂ Synthesis Hydrophilic Preloaded+14.00D SIP+14.00D	DM000333039
IMUNOTEHNOMED S.R.L.	CUTTING EDGE S.A.S.	Franta	LENTILĂ INTRAOCULARĂ Synthesis Hydrophilic Preloaded+14.50D SIP+14.50D	DM000333040
IMUNOTEHNOMED S.R.L.	CUTTING EDGE S.A.S.	Franta	LENTILĂ INTRAOCULARĂ Synthesis Hydrophilic Preloaded+15.00D SIP+15.00D	DM000333041
IMUNOTEHNOMED S.R.L.	CUTTING EDGE S.A.S.	Franta	LENTILĂ INTRAOCULARĂ Synthesis Hydrophilic Preloaded+15.50D SIP+15.50D	DM000333042
IMUNOTEHNOMED S.R.L.	CUTTING EDGE S.A.S.	Franta	LENTILĂ INTRAOCULARĂ Synthesis Hydrophilic Preloaded+16.00D SIP+16.00D	DM000333043
IMUNOTEHNOMED S.R.L.	CUTTING EDGE S.A.S.	Franta	LENTILĂ INTRAOCULARĂ Synthesis Hydrophilic Preloaded+16.50D SIP+16.50D	DM000333044
IMUNOTEHNOMED S.R.L.	CUTTING EDGE S.A.S.	Franta	LENTILĂ INTRAOCULARĂ Synthesis Hydrophilic Preloaded+17.00D SIP+17.00D	DM000333045
IMUNOTEHNOMED S.R.L.	CUTTING EDGE S.A.S.	Franta	LENTILĂ INTRAOCULARĂ Synthesis Hydrophilic Preloaded+17.50D SIP+17.50D	DM000333046
IMUNOTEHNOMED S.R.L.	CUTTING EDGE S.A.S.	Franta	LENTILĂ INTRAOCULARĂ Synthesis Hydrophilic Preloaded+18.00D SIP+18.00D	DM000333047
IMUNOTEHNOMED S.R.L.	CUTTING EDGE S.A.S.	Franta	LENTILĂ INTRAOCULARĂ Synthesis Hydrophilic Preloaded+18.50D SIP+18.50D	DM000333048
IMUNOTEHNOMED S.R.L.	CUTTING EDGE S.A.S.	Franta	LENTILĂ INTRAOCULARĂ Synthesis Hydrophilic Preloaded+19.00D SIP+19.00D	DM000333049
IMUNOTEHNOMED S.R.L.	CUTTING EDGE S.A.S.	Franta	LENTILĂ INTRAOCULARĂ Synthesis Hydrophilic Preloaded+19.50D SIP+19.50D	DM000333050
IMUNOTEHNOMED S.R.L.	CUTTING EDGE S.A.S.	Franta	LENTILĂ INTRAOCULARĂ Synthesis Hydrophilic Preloaded+20.00D SIP+20.00D	DM000333051
IMUNOTEHNOMED S.R.L.	CUTTING EDGE S.A.S.	Franta	LENTILĂ INTRAOCULARĂ Synthesis Hydrophilic Preloaded+20.50D SIP+20.50D	DM000333052
IMUNOTEHNOMED S.R.L.	CUTTING EDGE S.A.S.	Franta	LENTILĂ INTRAOCULARĂ Synthesis Hydrophilic Preloaded+21.00D SIP+21.00D	DM000333053
IMUNOTEHNOMED S.R.L.	CUTTING EDGE S.A.S.	Franta	LENTILĂ INTRAOCULARĂ Synthesis Hydrophilic Preloaded+21.50D SIP+21.50D	DM000333054
IMUNOTEHNOMED S.R.L.	CUTTING EDGE S.A.S.	Franta	LENTILĂ INTRAOCULARĂ Synthesis Hydrophilic Preloaded+22.00D SIP+22.00D	DM000333055
IMUNOTEHNOMED S.R.L.	CUTTING EDGE S.A.S.	Franta	LENTILĂ INTRAOCULARĂ Synthesis Hydrophilic Preloaded+22.50D SIP+22.50D	DM000333056
IMUNOTEHNOMED S.R.L.	CUTTING EDGE S.A.S.	Franta	LENTILĂ INTRAOCULARĂ Synthesis Hydrophilic Preloaded+23.00D SIP+23.00D	DM000333057
IMUNOTEHNOMED S.R.L.	CUTTING EDGE S.A.S.	Franta	LENTILĂ INTRAOCULARĂ Synthesis Hydrophilic Preloaded+23.50D SIP+23.50D	DM000333058
IMUNOTEHNOMED S.R.L.	CUTTING EDGE S.A.S.	Franta	LENTILĂ INTRAOCULARĂ Synthesis Hydrophilic Preloaded+24.00D SIP+24.00D	DM000333059
IMUNOTEHNOMED S.R.L.	CUTTING EDGE S.A.S.	Franta	LENTILĂ INTRAOCULARĂ Synthesis Hydrophilic Preloaded+24.50D SIP+24.50D	DM000333060
IMUNOTEHNOMED S.R.L.	CUTTING EDGE S.A.S.	Franta	LENTILĂ INTRAOCULARĂ Synthesis Hydrophilic Preloaded+25.00D SIP+25.00D	DM000333061
IMUNOTEHNOMED S.R.L.	CUTTING EDGE S.A.S.	Franta	LENTILĂ INTRAOCULARĂ Synthesis Hydrophilic Preloaded+25.50D SIP+25.50D	DM000333062
IMUNOTEHNOMED S.R.L.	CUTTING EDGE S.A.S.	Franta	LENTILĂ INTRAOCULARĂ Synthesis Hydrophilic Preloaded+26.00D SIP+26.00D	DM000333063
IMUNOTEHNOMED S.R.L.	CUTTING EDGE S.A.S.	Franta	LENTILĂ INTRAOCULARĂ Synthesis Hydrophilic Preloaded+26.50D SIP+26.50D	DM000333064
IMUNOTEHNOMED S.R.L.	CUTTING EDGE S.A.S.	Franta	LENTILĂ INTRAOCULARĂ Synthesis Hydrophilic Preloaded+27.00D SIP+27.00D	DM000333065
IMUNOTEHNOMED S.R.L.	CUTTING EDGE S.A.S.	Franta	LENTILĂ INTRAOCULARĂ Synthesis Hydrophilic Preloaded+27.50D SIP+27.50D	DM000333066
IMUNOTEHNOMED S.R.L.	CUTTING EDGE S.A.S.	Franta	LENTILĂ INTRAOCULARĂ Synthesis Hydrophilic Preloaded+28.00D SIP+28.00D	DM000333067

IMUNOTEHNOMED S.R.L.	CUTTING EDGE S.A.S.	Franta	LENTILĂ INTRAOCULARĂ Synthesis Hydrophilic Preloaded+28.50D SIP+28.50D	DM000333068
IMUNOTEHNOMED S.R.L.	CUTTING EDGE S.A.S.	Franta	LENTILĂ INTRAOCULARĂ Synthesis Hydrophilic Preloaded+29.00D SIP+29.00D	DM000333069
IMUNOTEHNOMED S.R.L.	CUTTING EDGE S.A.S.	Franta	LENTILĂ INTRAOCULARĂ Synthesis Hydrophilic Preloaded+29.50D SIP+29.50D	DM000333070
IMUNOTEHNOMED S.R.L.	CUTTING EDGE S.A.S.	Franta	LENTILĂ INTRAOCULARĂ Synthesis Hydrophilic Preloaded+30.00D SIP+30.00D	DM000333071
IMUNOTEHNOMED S.R.L.	CUTTING EDGE S.A.S.	Franta	LENTILĂ INTRAOCULARĂ Synthesis Hydrophilic Preloaded+31.00D SIP+31.00D	DM000333072
IMUNOTEHNOMED S.R.L.	CUTTING EDGE S.A.S.	Franta	LENTILĂ INTRAOCULARĂ Synthesis Hydrophilic Preloaded+32.00D SIP+32.00D	DM000333073
IMUNOTEHNOMED S.R.L.	CUTTING EDGE S.A.S.	Franta	LENTILĂ INTRAOCULARĂ Synthesis Hydrophilic Preloaded+33.00D SIP+33.00D	DM000333074
IMUNOTEHNOMED S.R.L.	CUTTING EDGE S.A.S.	Franta	LENTILĂ INTRAOCULARĂ Synthesis Hydrophilic Preloaded+34.00D SIP+34.00D	DM000333075
IMUNOTEHNOMED S.R.L.	CUTTING EDGE S.A.S.	Franta	LENTILĂ INTRAOCULARĂ Synthesis Hydrophilic Preloaded+35.00D SIP+35.00D	DM000333076
IMUNOTEHNOMED S.R.L.	CUTTING EDGE S.A.S.	Franta	LENTILĂ INTRAOCULARĂ Synthesis Hydrophilic Preloaded+36.00D SIP+36.00D	DM000333077
IMUNOTEHNOMED S.R.L.	CUTTING EDGE S.A.S.	Franta	LENTILĂ INTRAOCULARĂ Synthesis Hydrophilic Preloaded+37.00D SIP+37.00D	DM000333078
IMUNOTEHNOMED S.R.L.	CUTTING EDGE S.A.S.	Franta	LENTILĂ INTRAOCULARĂ Synthesis Hydrophilic Preloaded+38.00D SIP+38.00D	DM000333079
IMUNOTEHNOMED S.R.L.	CUTTING EDGE S.A.S.	Franta	LENTILĂ INTRAOCULARĂ Synthesis Hydrophilic Preloaded+39.00D SIP+39.00D	DM000333080
IMUNOTEHNOMED S.R.L.	CUTTING EDGE S.A.S.	Franta	LENTILĂ INTRAOCULARĂ Synthesis Hydrophilic Preloaded+40.00D SIP+40.00D	DM000333081
IMUNOTEHNOMED S.R.L.	CUTTING EDGE S.A.S.	Franta	LENTILĂ INTRAOCULARĂ Synthesis Hydrophilic Preloaded Yellow-10.00D SIPY-10.00D	DM000333082
IMUNOTEHNOMED S.R.L.	CUTTING EDGE S.A.S.	Franta	LENTILĂ INTRAOCULARĂ Synthesis Hydrophilic Preloaded Yellow-09.00D SIPY-09.00D	DM000333083
IMUNOTEHNOMED S.R.L.	CUTTING EDGE S.A.S.	Franta	LENTILĂ INTRAOCULARĂ Synthesis Hydrophilic Preloaded Yellow-08.00D SIPY-08.00D	DM000333084
IMUNOTEHNOMED S.R.L.	CUTTING EDGE S.A.S.	Franta	LENTILĂ INTRAOCULARĂ Synthesis Hydrophilic Preloaded Yellow-07.00D SIPY-07.00D	DM000333085
IMUNOTEHNOMED S.R.L.	CUTTING EDGE S.A.S.	Franta	LENTILĂ INTRAOCULARĂ Synthesis Hydrophilic Preloaded Yellow-06.00D SIPY-06.00D	DM000333086
IMUNOTEHNOMED S.R.L.	CUTTING EDGE S.A.S.	Franta	LENTILĂ INTRAOCULARĂ Synthesis Hydrophilic Preloaded Yellow-05.00D SIPY-05.00D	DM000333087
IMUNOTEHNOMED S.R.L.	CUTTING EDGE S.A.S.	Franta	LENTILĂ INTRAOCULARĂ Synthesis Hydrophilic Preloaded Yellow-04.00D SIPY-04.00D	DM000333088
IMUNOTEHNOMED S.R.L.	CUTTING EDGE S.A.S.	Franta	LENTILĂ INTRAOCULARĂ Synthesis Hydrophilic Preloaded Yellow-03.00D SIPY-03.00D	DM000333089
IMUNOTEHNOMED S.R.L.	CUTTING EDGE S.A.S.	Franta	LENTILĂ INTRAOCULARĂ Synthesis Hydrophilic Preloaded Yellow-02.00D SIPY-02.00D	DM000333090
IMUNOTEHNOMED S.R.L.	CUTTING EDGE S.A.S.	Franta	LENTILĂ INTRAOCULARĂ Synthesis Hydrophilic Preloaded Yellow-01.00D SIPY-01.00D	DM000333091
IMUNOTEHNOMED S.R.L.	CUTTING EDGE S.A.S.	Franta	LENTILĂ INTRAOCULARĂ Synthesis Hydrophilic Preloaded Yellow+00.00D SIPY+00.00D	DM000333092
IMUNOTEHNOMED S.R.L.	CUTTING EDGE S.A.S.	Franta	LENTILĂ INTRAOCULARĂ Synthesis Hydrophilic Preloaded Yellow+01.00D SIPY+01.00D	DM000333093
IMUNOTEHNOMED S.R.L.	CUTTING EDGE S.A.S.	Franta	LENTILĂ INTRAOCULARĂ Synthesis Hydrophilic Preloaded Yellow+02.00D SIPY+02.00D	DM000333094
IMUNOTEHNOMED S.R.L.	CUTTING EDGE S.A.S.	Franta	LENTILĂ INTRAOCULARĂ Synthesis Hydrophilic Preloaded Yellow+03.00D SIPY+03.00D	DM000333095
IMUNOTEHNOMED S.R.L.	CUTTING EDGE S.A.S.	Franta	LENTILĂ INTRAOCULARĂ Synthesis Hydrophilic Preloaded Yellow+04.00D SIPY+04.00D	DM000333096
IMUNOTEHNOMED S.R.L.	CUTTING EDGE S.A.S.	Franta	LENTILĂ INTRAOCULARĂ Synthesis Hydrophilic Preloaded Yellow+05.00D SIPY+05.00D	DM000333097
IMUNOTEHNOMED S.R.L.	CUTTING EDGE S.A.S.	Franta	LENTILĂ INTRAOCULARĂ Synthesis Hydrophilic Preloaded Yellow+06.00D SIPY+06.00D	DM000333098
IMUNOTEHNOMED S.R.L.	CUTTING EDGE S.A.S.	Franta	LENTILĂ INTRAOCULARĂ Synthesis Hydrophilic Preloaded Yellow+07.00D SIPY+07.00D	DM000333099
IMUNOTEHNOMED S.R.L.	CUTTING EDGE S.A.S.	Franta	LENTILĂ INTRAOCULARĂ Synthesis Hydrophilic Preloaded Yellow+08.00D SIPY+08.00D	DM000333100

IMUNOTEHNOMED S.R.L.	CUTTING EDGE S.A.S.	Franta	LENTILĂ INTRAOCULARĂ Synthesis Hydrophilic Preloaded Yellow+09.00D SIPY+09.00D	DM000333101
IMUNOTEHNOMED S.R.L.	CUTTING EDGE S.A.S.	Franta	LENTILĂ INTRAOCULARĂ Synthesis Hydrophilic Preloaded Yellow+10.00D SIPY+10.00D	DM000333102
IMUNOTEHNOMED S.R.L.	CUTTING EDGE S.A.S.	Franta	LENTILĂ INTRAOCULARĂ Synthesis Hydrophilic Preloaded Yellow+10.50D SIPY+10.50D	DM000333103
IMUNOTEHNOMED S.R.L.	CUTTING EDGE S.A.S.	Franta	LENTILĂ INTRAOCULARĂ Synthesis Hydrophilic Preloaded Yellow+11.00D SIPY+11.00D	DM000333104
IMUNOTEHNOMED S.R.L.	CUTTING EDGE S.A.S.	Franta	LENTILĂ INTRAOCULARĂ Synthesis Hydrophilic Preloaded Yellow-10.00D SIPY-10.00D	DM000333105
IMUNOTEHNOMED S.R.L.	CUTTING EDGE S.A.S.	Franta	LENTILĂ INTRAOCULARĂ Synthesis Hydrophilic Preloaded Yellow-09.00D SIPY-09.00D	DM000333106
IMUNOTEHNOMED S.R.L.	CUTTING EDGE S.A.S.	Franta	LENTILĂ INTRAOCULARĂ Synthesis Hydrophilic Preloaded Yellow-08.00D SIPY-08.00D	DM000333107
IMUNOTEHNOMED S.R.L.	CUTTING EDGE S.A.S.	Franta	LENTILĂ INTRAOCULARĂ Synthesis Hydrophilic Preloaded Yellow-07.00D SIPY-07.00D	DM000333108
IMUNOTEHNOMED S.R.L.	CUTTING EDGE S.A.S.	Franta	LENTILĂ INTRAOCULARĂ Synthesis Hydrophilic Preloaded Yellow-06.00D SIPY-06.00D	DM000333109
IMUNOTEHNOMED S.R.L.	CUTTING EDGE S.A.S.	Franta	LENTILĂ INTRAOCULARĂ Synthesis Hydrophilic Preloaded Yellow-05.00D SIPY-05.00D	DM000333110
IMUNOTEHNOMED S.R.L.	CUTTING EDGE S.A.S.	Franta	LENTILĂ INTRAOCULARĂ Synthesis Hydrophilic Preloaded Yellow-04.00D SIPY-04.00D	DM000333111
IMUNOTEHNOMED S.R.L.	CUTTING EDGE S.A.S.	Franta	LENTILĂ INTRAOCULARĂ Synthesis Hydrophilic Preloaded Yellow-03.00D SIPY-03.00D	DM000333112
IMUNOTEHNOMED S.R.L.	CUTTING EDGE S.A.S.	Franta	LENTILĂ INTRAOCULARĂ Synthesis Hydrophilic Preloaded Yellow-02.00D SIPY-02.00D	DM000333113
IMUNOTEHNOMED S.R.L.	CUTTING EDGE S.A.S.	Franta	LENTILĂ INTRAOCULARĂ Synthesis Hydrophilic Preloaded Yellow-01.00D SIPY-01.00D	DM000333114
IMUNOTEHNOMED S.R.L.	CUTTING EDGE S.A.S.	Franta	LENTILĂ INTRAOCULARĂ Synthesis Hydrophilic Preloaded Yellow+11.50D SIPY+11.50D	DM000333115
IMUNOTEHNOMED S.R.L.	CUTTING EDGE S.A.S.	Franta	LENTILĂ INTRAOCULARĂ Synthesis Hydrophilic Preloaded Yellow+12.00D SIPY+12.00D	DM000333116
IMUNOTEHNOMED S.R.L.	CUTTING EDGE S.A.S.	Franta	LENTILĂ INTRAOCULARĂ Synthesis Hydrophilic Preloaded Yellow+12.50D SIPY+12.50D	DM000333117
IMUNOTEHNOMED S.R.L.	CUTTING EDGE S.A.S.	Franta	LENTILĂ INTRAOCULARĂ Synthesis Hydrophilic Preloaded Yellow+13.00D SIPY+13.00D	DM000333118
IMUNOTEHNOMED S.R.L.	CUTTING EDGE S.A.S.	Franta	LENTILĂ INTRAOCULARĂ Synthesis Hydrophilic Preloaded Yellow+13.50D SIPY+13.50D	DM000333119
IMUNOTEHNOMED S.R.L.	CUTTING EDGE S.A.S.	Franta	LENTILĂ INTRAOCULARĂ Synthesis Hydrophilic Preloaded Yellow+14.00D SIPY+14.00D	DM000333120
IMUNOTEHNOMED S.R.L.	CUTTING EDGE S.A.S.	Franta	LENTILĂ INTRAOCULARĂ Synthesis Hydrophilic Preloaded Yellow+14.50D SIPY+14.50D	DM000333121
IMUNOTEHNOMED S.R.L.	CUTTING EDGE S.A.S.	Franta	LENTILĂ INTRAOCULARĂ Synthesis Hydrophilic Preloaded Yellow+15.00D SIPY+15.00D	DM000333122
IMUNOTEHNOMED S.R.L.	CUTTING EDGE S.A.S.	Franta	LENTILĂ INTRAOCULARĂ Synthesis Hydrophilic Preloaded Yellow+15.50D SIPY+15.50D	DM000333123
IMUNOTEHNOMED S.R.L.	CUTTING EDGE S.A.S.	Franta	LENTILĂ INTRAOCULARĂ Synthesis Hydrophilic Preloaded Yellow+16.00D SIPY+16.00D	DM000333124
IMUNOTEHNOMED S.R.L.	CUTTING EDGE S.A.S.	Franta	LENTILĂ INTRAOCULARĂ Synthesis Hydrophilic Preloaded Yellow+16.50D SIPY+16.50D	DM000333125
IMUNOTEHNOMED S.R.L.	CUTTING EDGE S.A.S.	Franta	LENTILĂ INTRAOCULARĂ Synthesis Hydrophilic Preloaded Yellow+17.00D SIPY+17.00D	DM000333126
IMUNOTEHNOMED S.R.L.	CUTTING EDGE S.A.S.	Franta	LENTILĂ INTRAOCULARĂ Synthesis Hydrophilic Preloaded Yellow+17.50D SIPY+17.50D	DM000333127
IMUNOTEHNOMED S.R.L.	CUTTING EDGE S.A.S.	Franta	LENTILĂ INTRAOCULARĂ Synthesis Hydrophilic Preloaded Yellow+18.00D SIPY+18.00D	DM000333128
IMUNOTEHNOMED S.R.L.	CUTTING EDGE S.A.S.	Franta	LENTILĂ INTRAOCULARĂ Synthesis Hydrophilic Preloaded Yellow+18.50D SIPY+18.50D	DM000333129
IMUNOTEHNOMED S.R.L.	CUTTING EDGE S.A.S.	Franta	LENTILĂ INTRAOCULARĂ Synthesis Hydrophilic Preloaded Yellow+19.00D SIPY+19.00D	DM000333130
IMUNOTEHNOMED S.R.L.	CUTTING EDGE S.A.S.	Franta	LENTILĂ INTRAOCULARĂ Synthesis Hydrophilic Preloaded Yellow+19.50D SIPY+19.50D	DM000333131
IMUNOTEHNOMED S.R.L.	CUTTING EDGE S.A.S.	Franta	LENTILĂ INTRAOCULARĂ Synthesis Hydrophilic Preloaded Yellow+20.00D SIPY+20.00D	DM000333132
IMUNOTEHNOMED S.R.L.	CUTTING EDGE S.A.S.	Franta	LENTILĂ INTRAOCULARĂ Synthesis Hydrophilic Preloaded Yellow+20.50D SIPY+20.50D	DM000333133

IMUNOTEHNOMED S.R.L.	CUTTING EDGE S.A.S.	Franta	LENTILĂ INTRAOCULARĂ Synthesis Hydrophilic Preloaded Yellow+21.00D SIPY+21.00D	DM000333134
IMUNOTEHNOMED S.R.L.	CUTTING EDGE S.A.S.	Franta	LENTILĂ INTRAOCULARĂ Synthesis Hydrophilic Preloaded Yellow+21.50D SIPY+21.50D	DM000333135
IMUNOTEHNOMED S.R.L.	CUTTING EDGE S.A.S.	Franta	LENTILĂ INTRAOCULARĂ Synthesis Hydrophilic Preloaded Yellow+22.00D SIPY+22.00D	DM000333136
IMUNOTEHNOMED S.R.L.	CUTTING EDGE S.A.S.	Franta	LENTILĂ INTRAOCULARĂ Synthesis Hydrophilic Preloaded Yellow+22.50D SIPY+22.50D	DM000333137
IMUNOTEHNOMED S.R.L.	CUTTING EDGE S.A.S.	Franta	LENTILĂ INTRAOCULARĂ Synthesis Hydrophilic Preloaded Yellow+23.00D SIPY+23.00D	DM000333138
IMUNOTEHNOMED S.R.L.	CUTTING EDGE S.A.S.	Franta	LENTILĂ INTRAOCULARĂ Synthesis Hydrophilic Preloaded Yellow+23.50D SIPY+23.50D	DM000333139
IMUNOTEHNOMED S.R.L.	CUTTING EDGE S.A.S.	Franta	LENTILĂ INTRAOCULARĂ Synthesis Hydrophilic Preloaded Yellow+24.00D SIPY+24.00D	DM000333140
IMUNOTEHNOMED S.R.L.	CUTTING EDGE S.A.S.	Franta	LENTILĂ INTRAOCULARĂ Synthesis Hydrophilic Preloaded Yellow+24.50D SIPY+24.50D	DM000333141
IMUNOTEHNOMED S.R.L.	CUTTING EDGE S.A.S.	Franta	LENTILĂ INTRAOCULARĂ Synthesis Hydrophilic Preloaded Yellow+25.00D SIPY+25.00D	DM000333142
IMUNOTEHNOMED S.R.L.	CUTTING EDGE S.A.S.	Franta	LENTILĂ INTRAOCULARĂ Synthesis Hydrophilic Preloaded Yellow+25.50D SIPY+25.SOD	DM000333143
IMUNOTEHNOMED S.R.L.	CUTTING EDGE S.A.S.	Franta	LENTILĂ INTRAOCULARĂ Synthesis Hydrophilic Preloaded Yellow+26.00D SIPY+26.00D	DM000333144
IMUNOTEHNOMED S.R.L.	CUTTING EDGE S.A.S.	Franta	LENTILĂ INTRAOCULARĂ Synthesis Hydrophilic Preloaded Yellow+26.50D SIPY+26.50D	DM000333145
IMUNOTEHNOMED S.R.L.	CUTTING EDGE S.A.S.	Franta	LENTILĂ INTRAOCULARĂ Synthesis Hydrophilic Preloaded Yellow-10.00D SIPY-10.00D	DM000333146
IMUNOTEHNOMED S.R.L.	CUTTING EDGE S.A.S.	Franta	LENTILĂ INTRAOCULARĂ Synthesis Hydrophilic Preloaded Yellow-09.00D SIPY-09.00D	DM000333147
IMUNOTEHNOMED S.R.L.	CUTTING EDGE S.A.S.	Franta	LENTILĂ INTRAOCULARĂ Synthesis Hydrophilic Preloaded Yellow-08.00D SIPY-08.00D	DM000333148
IMUNOTEHNOMED S.R.L.	CUTTING EDGE S.A.S.	Franta	LENTILĂ INTRAOCULARĂ Synthesis Hydrophilic Preloaded Yellow-07.00D SIPY-07.00D	DM000333149
IMUNOTEHNOMED S.R.L.	CUTTING EDGE S.A.S.	Franta	LENTILĂ INTRAOCULARĂ Synthesis Hydrophilic Preloaded Yellow-06.00D SIPY-06.00D	DM000333150
IMUNOTEHNOMED S.R.L.	CUTTING EDGE S.A.S.	Franta	LENTILĂ INTRAOCULARĂ Synthesis Hydrophilic Preloaded Yellow-05.00D SIPY-05.00D	DM000333151
IMUNOTEHNOMED S.R.L.	CUTTING EDGE S.A.S.	Franta	LENTILĂ INTRAOCULARĂ Synthesis Hydrophilic Preloaded Yellow-04.00D SIPY-04.00D	DM000333152
IMUNOTEHNOMED S.R.L.	CUTTING EDGE S.A.S.	Franta	LENTILĂ INTRAOCULARĂ Synthesis Hydrophilic Preloaded Yellow-03.00D SIPY-03.00D	DM000333153
IMUNOTEHNOMED S.R.L.	CUTTING EDGE S.A.S.	Franta	LENTILĂ INTRAOCULARĂ Synthesis Hydrophilic Preloaded Yellow-02.00D SIPY-02.00D	DM000333154
IMUNOTEHNOMED S.R.L.	CUTTING EDGE S.A.S.	Franta	LENTILĂ INTRAOCULARĂ Synthesis Hydrophilic Preloaded Yellow-01.00D SIPY-01.00D	DM000333155
IMUNOTEHNOMED S.R.L.	CUTTING EDGE S.A.S.	Franta	LENTILĂ INTRAOCULARĂ Synthesis Hydrophilic Preloaded Yellow+27.00D SIPY+27.00D	DM000333156
IMUNOTEHNOMED S.R.L.	CUTTING EDGE S.A.S.	Franta	LENTILĂ INTRAOCULARĂ Synthesis Hydrophilic Preloaded Yellow+27.50D SIPY+27.50D	DM000333157
IMUNOTEHNOMED S.R.L.	CUTTING EDGE S.A.S.	Franta	LENTILĂ INTRAOCULARĂ Synthesis Hydrophilic Preloaded Yellow+28.00D SIPY+28.00D	DM000333158
IMUNOTEHNOMED S.R.L.	CUTTING EDGE S.A.S.	Franta	LENTILĂ INTRAOCULARĂ Synthesis Hydrophilic Preloaded Yellow+28.50D SIPY+28.50D	DM000333159
IMUNOTEHNOMED S.R.L.	CUTTING EDGE S.A.S.	Franta	LENTILĂ INTRAOCULARĂ Synthesis Hydrophilic Preloaded Yellow+29.00D SIPY+29.00D	DM000333160
IMUNOTEHNOMED S.R.L.	CUTTING EDGE S.A.S.	Franta	LENTILĂ INTRAOCULARĂ Synthesis Hydrophilic Preloaded Yellow+29.50D SIPY+29.50D	DM000333161
IMUNOTEHNOMED S.R.L.	CUTTING EDGE S.A.S.	Franta	LENTILĂ INTRAOCULARĂ Synthesis Hydrophilic Preloaded Yellow+30.00D SIPY+30.00D	DM000333162
IMUNOTEHNOMED S.R.L.	CUTTING EDGE S.A.S.	Franta	LENTILĂ INTRAOCULARĂ Synthesis Hydrophilic Preloaded Yellow+31.00D SIPY+31.00D	DM000333163
IMUNOTEHNOMED S.R.L.	CUTTING EDGE S.A.S.	Franta	LENTILĂ INTRAOCULARĂ Synthesis Hydrophilic Preloaded Yellow+32.00D SIPY+32.00D	DM000333164
IMUNOTEHNOMED S.R.L.	CUTTING EDGE S.A.S.	Franta	LENTILĂ INTRAOCULARĂ Synthesis Hydrophilic Preloaded Yellow+33.00D SIPY+33.00D	DM000333165
IMUNOTEHNOMED S.R.L.	CUTTING EDGE S.A.S.	Franta	LENTILĂ INTRAOCULARĂ Synthesis Hydrophilic Preloaded Yellow+34.00D SIPY+34.00D	DM000333166

IMUNOTEHNOMED S.R.L.	CUTTING EDGE S.A.S.	Franta	LENTILĂ INTRAOCULARĂ Synthesis Hydrophilic Preloaded Yellow+35.00D SIPY+35.00D	DM000333167
IMUNOTEHNOMED S.R.L.	CUTTING EDGE S.A.S.	Franta	LENTILĂ INTRAOCULARĂ Synthesis Hydrophilic Preloaded Yellow+36.00D SIPY+36.00D	DM000333168
IMUNOTEHNOMED S.R.L.	CUTTING EDGE S.A.S.	Franta	LENTILĂ INTRAOCULARĂ Synthesis Hydrophilic Preloaded Yellow+37.00D SIPY+37.00D	DM000333169
IMUNOTEHNOMED S.R.L.	CUTTING EDGE S.A.S.	Franta	LENTILĂ INTRAOCULARĂ Synthesis Hydrophilic Preloaded Yellow+38.00D SIPY+38.00D	DM000333170
IMUNOTEHNOMED S.R.L.	CUTTING EDGE S.A.S.	Franta	LENTILĂ INTRAOCULARĂ Synthesis Hydrophilic Preloaded Yellow+39.00D SIPY+39.00D	DM000333171
IMUNOTEHNOMED S.R.L.	CUTTING EDGE S.A.S.	Franta	LENTILĂ INTRAOCULARĂ Synthesis Hydrophilic Preloaded Yellow+40.00D SIPY+40.00D	DM000333172

LISTA
dispozitivelor medicale înregistrate în Republica Moldova

Ordin de înregistrare nr.Rg04-000016 din 19.01.2022

Reprezentantul	Producatorul	Țara	Denumirea dispozitivului medical	Nr. de înreg.
IMUNOTEHNOMED S.R.L.	CUTTING EDGE S.A.S.	Franta	LENTILĂ INTRAOCULARĂ Synthesis Plus Hydrophilic Preloaded +00.00D PPLUS +00.00D	DM000334037
IMUNOTEHNOMED S.R.L.	CUTTING EDGE S.A.S.	Franta	LENTILĂ INTRAOCULARĂ Synthesis Plus Hydrophilic Preloaded +00.50D PPLUS +00.50D	DM000334038
IMUNOTEHNOMED S.R.L.	CUTTING EDGE S.A.S.	Franta	LENTILĂ INTRAOCULARĂ Synthesis Plus Hydrophilic Preloaded +01.00D PPLUS +01.00D	DM000334039
IMUNOTEHNOMED S.R.L.	CUTTING EDGE S.A.S.	Franta	LENTILĂ INTRAOCULARĂ Synthesis Plus Hydrophilic Preloaded +01.50D PPLUS +01.50D	DM000334040
IMUNOTEHNOMED S.R.L.	CUTTING EDGE S.A.S.	Franta	LENTILĂ INTRAOCULARĂ Synthesis Plus Hydrophilic Preloaded +02.00D PPLUS +02.00D	DM000334041
IMUNOTEHNOMED S.R.L.	CUTTING EDGE S.A.S.	Franta	LENTILĂ INTRAOCULARĂ Synthesis Plus Hydrophilic Preloaded +02.50D PPLUS +02.50D	DM000334042
IMUNOTEHNOMED S.R.L.	CUTTING EDGE S.A.S.	Franta	LENTILĂ INTRAOCULARĂ Synthesis Plus Hydrophilic Preloaded +03.00D PPLUS +03.00D	DM000334043
IMUNOTEHNOMED S.R.L.	CUTTING EDGE S.A.S.	Franta	LENTILĂ INTRAOCULARĂ Synthesis Plus Hydrophilic Preloaded +03.50D PPLUS +03.50D	DM000334044
IMUNOTEHNOMED S.R.L.	CUTTING EDGE S.A.S.	Franta	LENTILĂ INTRAOCULARĂ Synthesis Plus Hydrophilic Preloaded +04.00D PPLUS +04.00D	DM000334045
IMUNOTEHNOMED S.R.L.	CUTTING EDGE S.A.S.	Franta	LENTILĂ INTRAOCULARĂ Synthesis Plus Hydrophilic Preloaded +04.50D PPLUS +04.50D	DM000334046
IMUNOTEHNOMED S.R.L.	CUTTING EDGE S.A.S.	Franta	LENTILĂ INTRAOCULARĂ Synthesis Plus Hydrophilic Preloaded +05.00D PPLUS +05.00D	DM000334047
IMUNOTEHNOMED S.R.L.	CUTTING EDGE S.A.S.	Franta	LENTILĂ INTRAOCULARĂ Synthesis Plus Hydrophilic Preloaded +05.50D PPLUS +05.50D	DM000334048
IMUNOTEHNOMED S.R.L.	CUTTING EDGE S.A.S.	Franta	LENTILĂ INTRAOCULARĂ Synthesis Plus Hydrophilic Preloaded +06.00D PPLUS +06.00D	DM000334049
IMUNOTEHNOMED S.R.L.	CUTTING EDGE S.A.S.	Franta	LENTILĂ INTRAOCULARĂ Synthesis Plus Hydrophilic Preloaded +06.50D PPLUS +06.50D	DM000334050
IMUNOTEHNOMED S.R.L.	CUTTING EDGE S.A.S.	Franta	LENTILĂ INTRAOCULARĂ Synthesis Plus Hydrophilic Preloaded +07.00D PPLUS +07.00D	DM000334051
IMUNOTEHNOMED S.R.L.	CUTTING EDGE S.A.S.	Franta	LENTILĂ INTRAOCULARĂ Synthesis Plus Hydrophilic Preloaded +07.50D PPLUS +07.50D	DM000334052
IMUNOTEHNOMED S.R.L.	CUTTING EDGE S.A.S.	Franta	LENTILĂ INTRAOCULARĂ Synthesis Plus Hydrophilic Preloaded +08.00D PPLUS +08.00D	DM000334053
IMUNOTEHNOMED S.R.L.	CUTTING EDGE S.A.S.	Franta	LENTILĂ INTRAOCULARĂ Synthesis Plus Hydrophilic Preloaded +08.50D PPLUS +08.50D	DM000334054
IMUNOTEHNOMED S.R.L.	CUTTING EDGE S.A.S.	Franta	LENTILĂ INTRAOCULARĂ Synthesis Plus Hydrophilic Preloaded +09.00D PPLUS +09.00D	DM000334055
IMUNOTEHNOMED S.R.L.	CUTTING EDGE S.A.S.	Franta	LENTILĂ INTRAOCULARĂ Synthesis Plus Hydrophilic Preloaded +09.50D PPLUS +09.50D	DM000334056
IMUNOTEHNOMED S.R.L.	CUTTING EDGE S.A.S.	Franta	LENTILĂ INTRAOCULARĂ Synthesis Plus Hydrophilic Preloaded +10.00D PPLUS +10.00D	DM000334057
IMUNOTEHNOMED S.R.L.	CUTTING EDGE S.A.S.	Franta	LENTILĂ INTRAOCULARĂ Synthesis Plus Hydrophilic Preloaded +10.25D PPLUS +10.25D	DM000334058
IMUNOTEHNOMED S.R.L.	CUTTING EDGE S.A.S.	Franta	LENTILĂ INTRAOCULARĂ Synthesis Plus Hydrophilic Preloaded +10.50D PPLUS +10.50D	DM000334059
IMUNOTEHNOMED S.R.L.	CUTTING EDGE S.A.S.	Franta	LENTILĂ INTRAOCULARĂ Synthesis Plus Hydrophilic Preloaded +10.75D PPLUS +10.75D	DM000334060
IMUNOTEHNOMED S.R.L.	CUTTING EDGE S.A.S.	Franta	LENTILĂ INTRAOCULARĂ Synthesis Plus Hydrophilic Preloaded +11.00D PPLUS +11.00D	DM000334061
IMUNOTEHNOMED S.R.L.	CUTTING EDGE S.A.S.	Franta	LENTILĂ INTRAOCULARĂ Synthesis Plus Hydrophilic Preloaded +11.25D PPLUS +11.25D	DM000334062
IMUNOTEHNOMED S.R.L.	CUTTING EDGE S.A.S.	Franta	LENTILĂ INTRAOCULARĂ Synthesis Plus Hydrophilic Preloaded +11.50D PPLUS +11.50D	DM000334063

IMUNOTEHNOMED S.R.L.	CUTTING EDGE S.A.S.	Franta	LENTILĂ INTRAOCULARĂ Synthesis Plus Hydrophilic Preloaded +11.75D PPLUS +11.75D	DM000334064
IMUNOTEHNOMED S.R.L.	CUTTING EDGE S.A.S.	Franta	LENTILĂ INTRAOCULARĂ Synthesis Plus Hydrophilic Preloaded +12.00D PPLUS +12.00D	DM000334065
IMUNOTEHNOMED S.R.L.	CUTTING EDGE S.A.S.	Franta	LENTILĂ INTRAOCULARĂ Synthesis Plus Hydrophilic Preloaded +12.25D PPLUS +12.25D	DM000334066
IMUNOTEHNOMED S.R.L.	CUTTING EDGE S.A.S.	Franta	LENTILĂ INTRAOCULARĂ Synthesis Plus Hydrophilic Preloaded +12.50D PPLUS +12.50D	DM000334067
IMUNOTEHNOMED S.R.L.	CUTTING EDGE S.A.S.	Franta	LENTILĂ INTRAOCULARĂ Synthesis Plus Hydrophilic Preloaded +12.75D PPLUS +12.75D	DM000334068
IMUNOTEHNOMED S.R.L.	CUTTING EDGE S.A.S.	Franta	LENTILĂ INTRAOCULARĂ Synthesis Plus Hydrophilic Preloaded +13.00D PPLUS +13.00D	DM000334069
IMUNOTEHNOMED S.R.L.	CUTTING EDGE S.A.S.	Franta	LENTILĂ INTRAOCULARĂ Synthesis Plus Hydrophilic Preloaded +13.25D PPLUS +13.25D	DM000334070
IMUNOTEHNOMED S.R.L.	CUTTING EDGE S.A.S.	Franta	LENTILĂ INTRAOCULARĂ Synthesis Plus Hydrophilic Preloaded +13.50D PPLUS +13.50D	DM000334071
IMUNOTEHNOMED S.R.L.	CUTTING EDGE S.A.S.	Franta	LENTILĂ INTRAOCULARĂ Synthesis Plus Hydrophilic Preloaded +13.75D PPLUS +13.75D	DM000334072
IMUNOTEHNOMED S.R.L.	CUTTING EDGE S.A.S.	Franta	LENTILĂ INTRAOCULARĂ Synthesis Plus Hydrophilic Preloaded +14.00D PPLUS +14.00D	DM000334073
IMUNOTEHNOMED S.R.L.	CUTTING EDGE S.A.S.	Franta	LENTILĂ INTRAOCULARĂ Synthesis Plus Hydrophilic Preloaded +14.25D PPLUS +14.25D	DM000334074
IMUNOTEHNOMED S.R.L.	CUTTING EDGE S.A.S.	Franta	LENTILĂ INTRAOCULARĂ Synthesis Plus Hydrophilic Preloaded +14.50D PPLUS +14.50D	DM000334075
IMUNOTEHNOMED S.R.L.	CUTTING EDGE S.A.S.	Franta	LENTILĂ INTRAOCULARĂ Synthesis Plus Hydrophilic Preloaded +14.75D PPLUS +14.75D	DM000334076
IMUNOTEHNOMED S.R.L.	CUTTING EDGE S.A.S.	Franta	LENTILĂ INTRAOCULARĂ Synthesis Plus Hydrophilic Preloaded +15.00D PPLUS +15.00D	DM000334077
IMUNOTEHNOMED S.R.L.	CUTTING EDGE S.A.S.	Franta	LENTILĂ INTRAOCULARĂ Synthesis Plus Hydrophilic Preloaded +15.25D PPLUS +15.25D	DM000334078
IMUNOTEHNOMED S.R.L.	CUTTING EDGE S.A.S.	Franta	LENTILĂ INTRAOCULARĂ Synthesis Plus Hydrophilic Preloaded +15.50D PPLUS +15.50D	DM000334079
IMUNOTEHNOMED S.R.L.	CUTTING EDGE S.A.S.	Franta	LENTILĂ INTRAOCULARĂ Synthesis Plus Hydrophilic Preloaded +15.75D PPLUS +15.75D	DM000334080
IMUNOTEHNOMED S.R.L.	CUTTING EDGE S.A.S.	Franta	LENTILĂ INTRAOCULARĂ Synthesis Plus Hydrophilic Preloaded +16.00D PPLUS +16.00D	DM000334081
IMUNOTEHNOMED S.R.L.	CUTTING EDGE S.A.S.	Franta	LENTILĂ INTRAOCULARĂ Synthesis Plus Hydrophilic Preloaded +16.25D PPLUS +16.25D	DM000334082
IMUNOTEHNOMED S.R.L.	CUTTING EDGE S.A.S.	Franta	LENTILĂ INTRAOCULARĂ Synthesis Plus Hydrophilic Preloaded +16.50D PPLUS +16.50D	DM000334083
IMUNOTEHNOMED S.R.L.	CUTTING EDGE S.A.S.	Franta	LENTILĂ INTRAOCULARĂ Synthesis Plus Hydrophilic Preloaded +16.75D PPLUS +16.75D	DM000334084
IMUNOTEHNOMED S.R.L.	CUTTING EDGE S.A.S.	Franta	LENTILĂ INTRAOCULARĂ Synthesis Plus Hydrophilic Preloaded +17.00D PPLUS +17.00D	DM000334085
IMUNOTEHNOMED S.R.L.	CUTTING EDGE S.A.S.	Franta	LENTILĂ INTRAOCULARĂ Synthesis Plus Hydrophilic Preloaded +17.25D PPLUS +17.25D	DM000334086
IMUNOTEHNOMED S.R.L.	CUTTING EDGE S.A.S.	Franta	LENTILĂ INTRAOCULARĂ Synthesis Plus Hydrophilic Preloaded +17.50D PPLUS +17.50D	DM000334087
IMUNOTEHNOMED S.R.L.	CUTTING EDGE S.A.S.	Franta	LENTILĂ INTRAOCULARĂ Synthesis Plus Hydrophilic Preloaded +17.75D PPLUS +17.75D	DM000334088
IMUNOTEHNOMED S.R.L.	CUTTING EDGE S.A.S.	Franta	LENTILĂ INTRAOCULARĂ Synthesis Plus Hydrophilic Preloaded +18.00D PPLUS +18.00D	DM000334089
IMUNOTEHNOMED S.R.L.	CUTTING EDGE S.A.S.	Franta	LENTILĂ INTRAOCULARĂ Synthesis Plus Hydrophilic Preloaded +18.25D PPLUS +18.25D	DM000334090
IMUNOTEHNOMED S.R.L.	CUTTING EDGE S.A.S.	Franta	LENTILĂ INTRAOCULARĂ Synthesis Plus Hydrophilic Preloaded +18.50D PPLUS +18.50D	DM000334091
IMUNOTEHNOMED S.R.L.	CUTTING EDGE S.A.S.	Franta	LENTILĂ INTRAOCULARĂ Synthesis Plus Hydrophilic Preloaded +18.75D PPLUS +18.75D	DM000334092
IMUNOTEHNOMED S.R.L.	CUTTING EDGE S.A.S.	Franta	LENTILĂ INTRAOCULARĂ Synthesis Plus Hydrophilic Preloaded +19.00D PPLUS +19.00D	DM000334093
IMUNOTEHNOMED S.R.L.	CUTTING EDGE S.A.S.	Franta	LENTILĂ INTRAOCULARĂ Synthesis Plus Hydrophilic Preloaded +19.25D PPLUS +19.25D	DM000334094
IMUNOTEHNOMED S.R.L.	CUTTING EDGE S.A.S.	Franta	LENTILĂ INTRAOCULARĂ Synthesis Plus Hydrophilic Preloaded +19.50D PPLUS +19.50D	DM000334095
IMUNOTEHNOMED S.R.L.	CUTTING EDGE S.A.S.	Franta	LENTILĂ INTRAOCULARĂ Synthesis Plus Hydrophilic Preloaded +19.75D PPLUS +19.75D	DM000334096

IMUNOTEHNOMED S.R.L.	CUTTING EDGE S.A.S.	Franta	LENTILĂ INTRAOCULARĂ Synthesis Plus Hydrophilic Preloaded +20.00D PPLUS +20.00D	DM000334097
IMUNOTEHNOMED S.R.L.	CUTTING EDGE S.A.S.	Franta	LENTILĂ INTRAOCULARĂ Synthesis Plus Hydrophilic Preloaded +20.25D PPLUS +20.25D	DM000334098
IMUNOTEHNOMED S.R.L.	CUTTING EDGE S.A.S.	Franta	LENTILĂ INTRAOCULARĂ Synthesis Plus Hydrophilic Preloaded +20.50D PPLUS +20.50D	DM000334099
IMUNOTEHNOMED S.R.L.	CUTTING EDGE S.A.S.	Franta	LENTILĂ INTRAOCULARĂ Synthesis Plus Hydrophilic Preloaded +20.75D PPLUS +20.75D	DM000334100
IMUNOTEHNOMED S.R.L.	CUTTING EDGE S.A.S.	Franta	LENTILĂ INTRAOCULARĂ Synthesis Plus Hydrophilic Preloaded +21.00D PPLUS +21.00D	DM000334101
IMUNOTEHNOMED S.R.L.	CUTTING EDGE S.A.S.	Franta	LENTILĂ INTRAOCULARĂ Synthesis Plus Hydrophilic Preloaded +21.25D PPLUS +21.25D	DM000334102
IMUNOTEHNOMED S.R.L.	CUTTING EDGE S.A.S.	Franta	LENTILĂ INTRAOCULARĂ Synthesis Plus Hydrophilic Preloaded +21.50D PPLUS +21.50D	DM000334103
IMUNOTEHNOMED S.R.L.	CUTTING EDGE S.A.S.	Franta	LENTILĂ INTRAOCULARĂ Synthesis Plus Hydrophilic Preloaded +21.75D PPLUS +21.75D	DM000334104
IMUNOTEHNOMED S.R.L.	CUTTING EDGE S.A.S.	Franta	LENTILĂ INTRAOCULARĂ Synthesis Plus Hydrophilic Preloaded +22.00D PPLUS +22.00D	DM000334105
IMUNOTEHNOMED S.R.L.	CUTTING EDGE S.A.S.	Franta	LENTILĂ INTRAOCULARĂ Synthesis Plus Hydrophilic Preloaded +22.25D PPLUS +22.25D	DM000334106
IMUNOTEHNOMED S.R.L.	CUTTING EDGE S.A.S.	Franta	LENTILĂ INTRAOCULARĂ Synthesis Plus Hydrophilic Preloaded +22.50D PPLUS +22.50D	DM000334107
IMUNOTEHNOMED S.R.L.	CUTTING EDGE S.A.S.	Franta	LENTILĂ INTRAOCULARĂ Synthesis Plus Hydrophilic Preloaded +22.75D PPLUS +22.75D	DM000334108
IMUNOTEHNOMED S.R.L.	CUTTING EDGE S.A.S.	Franta	LENTILĂ INTRAOCULARĂ Synthesis Plus Hydrophilic Preloaded +23.00D PPLUS +23.00D	DM000334109
IMUNOTEHNOMED S.R.L.	CUTTING EDGE S.A.S.	Franta	LENTILĂ INTRAOCULARĂ Synthesis Plus Hydrophilic Preloaded +23.25D PPLUS +23.25D	DM000334110
IMUNOTEHNOMED S.R.L.	CUTTING EDGE S.A.S.	Franta	LENTILĂ INTRAOCULARĂ Synthesis Plus Hydrophilic Preloaded +23.50D PPLUS +23.50D	DM000334111
IMUNOTEHNOMED S.R.L.	CUTTING EDGE S.A.S.	Franta	LENTILĂ INTRAOCULARĂ Synthesis Plus Hydrophilic Preloaded +23.75D PPLUS +23.75D	DM000334112
IMUNOTEHNOMED S.R.L.	CUTTING EDGE S.A.S.	Franta	LENTILĂ INTRAOCULARĂ Synthesis Plus Hydrophilic Preloaded +24.00D PPLUS +24.00D	DM000334113
IMUNOTEHNOMED S.R.L.	CUTTING EDGE S.A.S.	Franta	LENTILĂ INTRAOCULARĂ Synthesis Plus Hydrophilic Preloaded +24.25D PPLUS +24.25D	DM000334114
IMUNOTEHNOMED S.R.L.	CUTTING EDGE S.A.S.	Franta	LENTILĂ INTRAOCULARĂ Synthesis Plus Hydrophilic Preloaded +24.50D PPLUS +24.50D	DM000334115
IMUNOTEHNOMED S.R.L.	CUTTING EDGE S.A.S.	Franta	LENTILĂ INTRAOCULARĂ Synthesis Plus Hydrophilic Preloaded +24.75D PPLUS +24.75D	DM000334116
IMUNOTEHNOMED S.R.L.	CUTTING EDGE S.A.S.	Franta	LENTILĂ INTRAOCULARĂ Synthesis Plus Hydrophilic Preloaded +25.00D PPLUS +25.00D	DM000334117
IMUNOTEHNOMED S.R.L.	CUTTING EDGE S.A.S.	Franta	LENTILĂ INTRAOCULARĂ Synthesis Plus Hydrophilic Preloaded +25.25D PPLUS +25.25D	DM000334118
IMUNOTEHNOMED S.R.L.	CUTTING EDGE S.A.S.	Franta	LENTILĂ INTRAOCULARĂ Synthesis Plus Hydrophilic Preloaded +25.50D PPLUS +25.50D	DM000334119
IMUNOTEHNOMED S.R.L.	CUTTING EDGE S.A.S.	Franta	LENTILĂ INTRAOCULARĂ Synthesis Plus Hydrophilic Preloaded +25.75D PPLUS +25.75D	DM000334120
IMUNOTEHNOMED S.R.L.	CUTTING EDGE S.A.S.	Franta	LENTILĂ INTRAOCULARĂ Synthesis Plus Hydrophilic Preloaded +26.00D PPLUS +26.00D	DM000334121
IMUNOTEHNOMED S.R.L.	CUTTING EDGE S.A.S.	Franta	LENTILĂ INTRAOCULARĂ Synthesis Plus Hydrophilic Preloaded +26.25D PPLUS +26.25D	DM000334122
IMUNOTEHNOMED S.R.L.	CUTTING EDGE S.A.S.	Franta	LENTILĂ INTRAOCULARĂ Synthesis Plus Hydrophilic Preloaded +26.50D PPLUS +26.50D	DM000334123
IMUNOTEHNOMED S.R.L.	CUTTING EDGE S.A.S.	Franta	LENTILĂ INTRAOCULARĂ Synthesis Plus Hydrophilic Preloaded +26.75D PPLUS +26.75D	DM000334124
IMUNOTEHNOMED S.R.L.	CUTTING EDGE S.A.S.	Franta	LENTILĂ INTRAOCULARĂ Synthesis Plus Hydrophilic Preloaded +27.00D PPLUS +27.00D	DM000334125
IMUNOTEHNOMED S.R.L.	CUTTING EDGE S.A.S.	Franta	LENTILĂ INTRAOCULARĂ Synthesis Plus Hydrophilic Preloaded +27.25D PPLUS +27.25D	DM000334126
IMUNOTEHNOMED S.R.L.	CUTTING EDGE S.A.S.	Franta	LENTILĂ INTRAOCULARĂ Synthesis Plus Hydrophilic Preloaded +27.50D PPLUS +27.50D	DM000334127
IMUNOTEHNOMED S.R.L.	CUTTING EDGE S.A.S.	Franta	LENTILĂ INTRAOCULARĂ Synthesis Plus Hydrophilic Preloaded +27.75D PPLUS +27.75D	DM000334128
IMUNOTEHNOMED S.R.L.	CUTTING EDGE S.A.S.	Franta	LENTILĂ INTRAOCULARĂ Synthesis Plus Hydrophilic Preloaded +28.00D PPLUS +28.00D	DM000334129

IMUNOTEHNOMED S.R.L.	CUTTING EDGE S.A.S.	Franta	LENTILĂ INTRAOCULARĂ Synthesis Plus Hydrophilic Preloaded +28.25D PPLUS +28.25D	DM000334130
IMUNOTEHNOMED S.R.L.	CUTTING EDGE S.A.S.	Franta	LENTILĂ INTRAOCULARĂ Synthesis Plus Hydrophilic Preloaded +28.50D PPLUS +28.50D	DM000334131
IMUNOTEHNOMED S.R.L.	CUTTING EDGE S.A.S.	Franta	LENTILĂ INTRAOCULARĂ Synthesis Plus Hydrophilic Preloaded +28.75D PPLUS +28.75D	DM000334132
IMUNOTEHNOMED S.R.L.	CUTTING EDGE S.A.S.	Franta	LENTILĂ INTRAOCULARĂ Synthesis Plus Hydrophilic Preloaded +29.00D PPLUS +29.00D	DM000334133
IMUNOTEHNOMED S.R.L.	CUTTING EDGE S.A.S.	Franta	LENTILĂ INTRAOCULARĂ Synthesis Plus Hydrophilic Preloaded +29.25D PPLUS +29.25D	DM000334134
IMUNOTEHNOMED S.R.L.	CUTTING EDGE S.A.S.	Franta	LENTILĂ INTRAOCULARĂ Synthesis Plus Hydrophilic Preloaded +29.50D PPLUS +29.50D	DM000334135
IMUNOTEHNOMED S.R.L.	CUTTING EDGE S.A.S.	Franta	LENTILĂ INTRAOCULARĂ Synthesis Plus Hydrophilic Preloaded +29.75D PPLUS +29.75D	DM000334136
IMUNOTEHNOMED S.R.L.	CUTTING EDGE S.A.S.	Franta	LENTILĂ INTRAOCULARĂ Synthesis Plus Hydrophilic Preloaded +30.00D PPLUS +30.00D	DM000334137
IMUNOTEHNOMED S.R.L.	CUTTING EDGE S.A.S.	Franta	LENTILĂ INTRAOCULARĂ Synthesis Plus Hydrophilic Preloaded +30.25D PPLUS +30.25D	DM000334138
IMUNOTEHNOMED S.R.L.	CUTTING EDGE S.A.S.	Franta	LENTILĂ INTRAOCULARĂ Synthesis Plus Hydrophilic Preloaded +30.50D PPLUS +30.50D	DM000334139
IMUNOTEHNOMED S.R.L.	CUTTING EDGE S.A.S.	Franta	LENTILĂ INTRAOCULARĂ Synthesis Plus Hydrophilic Preloaded +30.75D PPLUS +30.75D	DM000334140
IMUNOTEHNOMED S.R.L.	CUTTING EDGE S.A.S.	Franta	LENTILĂ INTRAOCULARĂ Synthesis Plus Hydrophilic Preloaded +31.00D PPLUS +31.00D	DM000334141
IMUNOTEHNOMED S.R.L.	CUTTING EDGE S.A.S.	Franta	LENTILĂ INTRAOCULARĂ Synthesis Plus Hydrophilic Preloaded +31.25D PPLUS +31.25D	DM000334142
IMUNOTEHNOMED S.R.L.	CUTTING EDGE S.A.S.	Franta	LENTILĂ INTRAOCULARĂ Synthesis Plus Hydrophilic Preloaded +31.50D PPLUS +31.50D	DM000334143
IMUNOTEHNOMED S.R.L.	CUTTING EDGE S.A.S.	Franta	LENTILĂ INTRAOCULARĂ Synthesis Plus Hydrophilic Preloaded +31.75D PPLUS +31.75D	DM000334144
IMUNOTEHNOMED S.R.L.	CUTTING EDGE S.A.S.	Franta	LENTILĂ INTRAOCULARĂ Synthesis Plus Hydrophilic Preloaded +32.00D PPLUS +32.00D	DM000334145
IMUNOTEHNOMED S.R.L.	CUTTING EDGE S.A.S.	Franta	LENTILĂ INTRAOCULARĂ Synthesis Plus Hydrophilic Yellow Preloaded +00.00D PYPLUS +00.00D	DM000334146
IMUNOTEHNOMED S.R.L.	CUTTING EDGE S.A.S.	Franta	LENTILĂ INTRAOCULARĂ Synthesis Plus Hydrophilic Yellow Preloaded +00.50D PYPLUS +00.50D	DM000334147
IMUNOTEHNOMED S.R.L.	CUTTING EDGE S.A.S.	Franta	LENTILĂ INTRAOCULARĂ Synthesis Plus Hydrophilic Yellow Preloaded +01.00D PYPLUS +01.00D	DM000334148
IMUNOTEHNOMED S.R.L.	CUTTING EDGE S.A.S.	Franta	LENTILĂ INTRAOCULARĂ Synthesis Plus Hydrophilic Yellow Preloaded +01.50D PYPLUS +01.50D	DM000334149
IMUNOTEHNOMED S.R.L.	CUTTING EDGE S.A.S.	Franta	LENTILĂ INTRAOCULARĂ Synthesis Plus Hydrophilic Yellow Preloaded +02.00D PYPLUS +02.00D	DM000334150
IMUNOTEHNOMED S.R.L.	CUTTING EDGE S.A.S.	Franta	LENTILĂ INTRAOCULARĂ Synthesis Plus Hydrophilic Yellow Preloaded +02.50D PYPLUS +02.50D	DM000334151
IMUNOTEHNOMED S.R.L.	CUTTING EDGE S.A.S.	Franta	LENTILĂ INTRAOCULARĂ Synthesis Plus Hydrophilic Yellow Preloaded +03.00D PYPLUS +03.00D	DM000334152
IMUNOTEHNOMED S.R.L.	CUTTING EDGE S.A.S.	Franta	LENTILĂ INTRAOCULARĂ Synthesis Plus Hydrophilic Yellow Preloaded +03.50D PYPLUS +03.50D	DM000334153
IMUNOTEHNOMED S.R.L.	CUTTING EDGE S.A.S.	Franta	LENTILĂ INTRAOCULARĂ Synthesis Plus Hydrophilic Yellow Preloaded +04.00D PYPLUS +04.00D	DM000334154
IMUNOTEHNOMED S.R.L.	CUTTING EDGE S.A.S.	Franta	LENTILĂ INTRAOCULARĂ Synthesis Plus Hydrophilic Yellow Preloaded +04.50D PYPLUS +04.50D	DM000334155
IMUNOTEHNOMED S.R.L.	CUTTING EDGE S.A.S.	Franta	LENTILĂ INTRAOCULARĂ Synthesis Plus Hydrophilic Yellow Preloaded +05.00D PYPLUS +05.00D	DM000334156
IMUNOTEHNOMED S.R.L.	CUTTING EDGE S.A.S.	Franta	LENTILĂ INTRAOCULARĂ Synthesis Plus Hydrophilic Yellow Preloaded +05.50D PYPLUS +05.50D	DM000334157
IMUNOTEHNOMED S.R.L.	CUTTING EDGE S.A.S.	Franta	LENTILĂ INTRAOCULARĂ Synthesis Plus Hydrophilic Yellow Preloaded +06.00D PYPLUS +06.00D	DM000334158
IMUNOTEHNOMED S.R.L.	CUTTING EDGE S.A.S.	Franta	LENTILĂ INTRAOCULARĂ Synthesis Plus Hydrophilic Yellow Preloaded +06.50D PYPLUS +06.50D	DM000334159
IMUNOTEHNOMED S.R.L.	CUTTING EDGE S.A.S.	Franta	LENTILĂ INTRAOCULARĂ Synthesis Plus Hydrophilic Yellow Preloaded +07.00D PYPLUS +07.00D	DM000334160
IMUNOTEHNOMED S.R.L.	CUTTING EDGE S.A.S.	Franta	LENTILĂ INTRAOCULARĂ Synthesis Plus Hydrophilic Yellow Preloaded +07.50D PYPLUS +07.50D	DM000334161
IMUNOTEHNOMED S.R.L.	CUTTING EDGE S.A.S.	Franta	LENTILĂ INTRAOCULARĂ Synthesis Plus Hydrophilic Yellow Preloaded +08.00D PYPLUS +08.00D	DM000334162

IMUNOTEHNOMED S.R.L.	CUTTING EDGE S.A.S.	Franta	LENTILĂ INTRAOCULARĂ Synthesis Plus Hydrophilic Yellow Preloaded +08.50D PYPLUS +08.50D	DM000334163
IMUNOTEHNOMED S.R.L.	CUTTING EDGE S.A.S.	Franta	LENTILĂ INTRAOCULARĂ Synthesis Plus Hydrophilic Yellow Preloaded +09.00D PYPLUS +09.00D	DM000334164
IMUNOTEHNOMED S.R.L.	CUTTING EDGE S.A.S.	Franta	LENTILĂ INTRAOCULARĂ Synthesis Plus Hydrophilic Yellow Preloaded +09.50D PYPLUS +09.50D	DM000334165
IMUNOTEHNOMED S.R.L.	CUTTING EDGE S.A.S.	Franta	LENTILĂ INTRAOCULARĂ Synthesis Plus Hydrophilic Yellow Preloaded +10.00D PYPLUS +10.00D	DM000334166
IMUNOTEHNOMED S.R.L.	CUTTING EDGE S.A.S.	Franta	LENTILĂ INTRAOCULARĂ Synthesis Plus Hydrophilic Yellow Preloaded +10.25D PYPLUS +10.25D	DM000334167
IMUNOTEHNOMED S.R.L.	CUTTING EDGE S.A.S.	Franta	LENTILĂ INTRAOCULARĂ Synthesis Plus Hydrophilic Yellow Preloaded +10.50D PYPLUS +10.50D	DM000334168
IMUNOTEHNOMED S.R.L.	CUTTING EDGE S.A.S.	Franta	LENTILĂ INTRAOCULARĂ Synthesis Plus Hydrophilic Yellow Preloaded +10.75D PYPLUS +10.75D	DM000334169
IMUNOTEHNOMED S.R.L.	CUTTING EDGE S.A.S.	Franta	LENTILĂ INTRAOCULARĂ Synthesis Plus Hydrophilic Yellow Preloaded +11.00D PYPLUS +11.00D	DM000334170
IMUNOTEHNOMED S.R.L.	CUTTING EDGE S.A.S.	Franta	LENTILĂ INTRAOCULARĂ Synthesis Plus Hydrophilic Yellow Preloaded +11.25D PYPLUS +11.25D	DM000334171
IMUNOTEHNOMED S.R.L.	CUTTING EDGE S.A.S.	Franta	LENTILĂ INTRAOCULARĂ Synthesis Plus Hydrophilic Yellow Preloaded +11.50D PYPLUS +11.50D	DM000334172
IMUNOTEHNOMED S.R.L.	CUTTING EDGE S.A.S.	Franta	LENTILĂ INTRAOCULARĂ Synthesis Plus Hydrophilic Yellow Preloaded +11.75D PYPLUS +11.75D	DM000334173
IMUNOTEHNOMED S.R.L.	CUTTING EDGE S.A.S.	Franta	LENTILĂ INTRAOCULARĂ Synthesis Plus Hydrophilic Yellow Preloaded +12.00D PYPLUS +12.00D	DM000334174
IMUNOTEHNOMED S.R.L.	CUTTING EDGE S.A.S.	Franta	LENTILĂ INTRAOCULARĂ Synthesis Plus Hydrophilic Yellow Preloaded +12.25D PYPLUS +12.25D	DM000334175
IMUNOTEHNOMED S.R.L.	CUTTING EDGE S.A.S.	Franta	LENTILĂ INTRAOCULARĂ Synthesis Plus Hydrophilic Yellow Preloaded +12.50D PYPLUS +12.50D	DM000334176
IMUNOTEHNOMED S.R.L.	CUTTING EDGE S.A.S.	Franta	LENTILĂ INTRAOCULARĂ Synthesis Plus Hydrophilic Yellow Preloaded +12.75D PYPLUS +12.75D	DM000334177
IMUNOTEHNOMED S.R.L.	CUTTING EDGE S.A.S.	Franta	LENTILĂ INTRAOCULARĂ Synthesis Plus Hydrophilic Yellow Preloaded +13.00D PYPLUS +13.00D	DM000334178
IMUNOTEHNOMED S.R.L.	CUTTING EDGE S.A.S.	Franta	LENTILĂ INTRAOCULARĂ Synthesis Plus Hydrophilic Yellow Preloaded +13.25D PYPLUS +13.25D	DM000334179
IMUNOTEHNOMED S.R.L.	CUTTING EDGE S.A.S.	Franta	LENTILĂ INTRAOCULARĂ Synthesis Plus Hydrophilic Yellow Preloaded +13.50D PYPLUS +13.50D	DM000334180
IMUNOTEHNOMED S.R.L.	CUTTING EDGE S.A.S.	Franta	LENTILĂ INTRAOCULARĂ Synthesis Plus Hydrophilic Yellow Preloaded +13.75D PYPLUS +13.75D	DM000334181
IMUNOTEHNOMED S.R.L.	CUTTING EDGE S.A.S.	Franta	LENTILĂ INTRAOCULARĂ Synthesis Plus Hydrophilic Yellow Preloaded +14.00D PYPLUS +14.00D	DM000334182
IMUNOTEHNOMED S.R.L.	CUTTING EDGE S.A.S.	Franta	LENTILĂ INTRAOCULARĂ Synthesis Plus Hydrophilic Yellow Preloaded +14.25D PYPLUS +14.25D	DM000334183
IMUNOTEHNOMED S.R.L.	CUTTING EDGE S.A.S.	Franta	LENTILĂ INTRAOCULARĂ Synthesis Plus Hydrophilic Yellow Preloaded +14.50D PYPLUS +14.50D	DM000334184
IMUNOTEHNOMED S.R.L.	CUTTING EDGE S.A.S.	Franta	LENTILĂ INTRAOCULARĂ Synthesis Plus Hydrophilic Yellow Preloaded +14.75D PYPLUS +14.75D	DM000334185
IMUNOTEHNOMED S.R.L.	CUTTING EDGE S.A.S.	Franta	LENTILĂ INTRAOCULARĂ Synthesis Plus Hydrophilic Yellow Preloaded +15.00D PYPLUS +15.00D	DM000334186
IMUNOTEHNOMED S.R.L.	CUTTING EDGE S.A.S.	Franta	LENTILĂ INTRAOCULARĂ Synthesis Plus Hydrophilic Yellow Preloaded +15.25D PYPLUS +15.25D	DM000334187
IMUNOTEHNOMED S.R.L.	CUTTING EDGE S.A.S.	Franta	LENTILĂ INTRAOCULARĂ Synthesis Plus Hydrophilic Yellow Preloaded +15.50D PYPLUS +15.50D	DM000334188
IMUNOTEHNOMED S.R.L.	CUTTING EDGE S.A.S.	Franta	LENTILĂ INTRAOCULARĂ Synthesis Plus Hydrophilic Yellow Preloaded +15.75D PYPLUS +15.75D	DM000334189
IMUNOTEHNOMED S.R.L.	CUTTING EDGE S.A.S.	Franta	LENTILĂ INTRAOCULARĂ Synthesis Plus Hydrophilic Yellow Preloaded +16.00D PYPLUS +16.00D	DM000334190
IMUNOTEHNOMED S.R.L.	CUTTING EDGE S.A.S.	Franta	LENTILĂ INTRAOCULARĂ Synthesis Plus Hydrophilic Yellow Preloaded +16.25D PYPLUS +16.25D	DM000334191
IMUNOTEHNOMED S.R.L.	CUTTING EDGE S.A.S.	Franta	LENTILĂ INTRAOCULARĂ Synthesis Plus Hydrophilic Yellow Preloaded +16.50D PYPLUS +16.50D	DM000334192
IMUNOTEHNOMED S.R.L.	CUTTING EDGE S.A.S.	Franta	LENTILĂ INTRAOCULARĂ Synthesis Plus Hydrophilic Yellow Preloaded +16.75D PYPLUS +16.75D	DM000334193
IMUNOTEHNOMED S.R.L.	CUTTING EDGE S.A.S.	Franta	LENTILĂ INTRAOCULARĂ Synthesis Plus Hydrophilic Yellow Preloaded +17.00D PYPLUS +17.00D	DM000334194
IMUNOTEHNOMED S.R.L.	CUTTING EDGE S.A.S.	Franta	LENTILĂ INTRAOCULARĂ Synthesis Plus Hydrophilic Yellow Preloaded +17.25D PYPLUS +17.25D	DM000334195

IMUNOTEHNOMED S.R.L.	CUTTING EDGE S.A.S.	Franta	LENTILĂ INTRAOCULARĂ Synthesis Plus Hydrophilic Yellow Preloaded +17.50D PYPLUS +17.50D	DM000334196
IMUNOTEHNOMED S.R.L.	CUTTING EDGE S.A.S.	Franta	LENTILĂ INTRAOCULARĂ Synthesis Plus Hydrophilic Yellow Preloaded +17.75D PYPLUS +17.75D	DM000334197
IMUNOTEHNOMED S.R.L.	CUTTING EDGE S.A.S.	Franta	LENTILĂ INTRAOCULARĂ Synthesis Plus Hydrophilic Yellow Preloaded +18.00D PYPLUS +18.00D	DM000334198
IMUNOTEHNOMED S.R.L.	CUTTING EDGE S.A.S.	Franta	LENTILĂ INTRAOCULARĂ Synthesis Plus Hydrophilic Yellow Preloaded +18.25D PYPLUS +18.25D	DM000334199
IMUNOTEHNOMED S.R.L.	CUTTING EDGE S.A.S.	Franta	LENTILĂ INTRAOCULARĂ Synthesis Plus Hydrophilic Yellow Preloaded +18.50D PYPLUS +18.50D	DM000334200
IMUNOTEHNOMED S.R.L.	CUTTING EDGE S.A.S.	Franta	LENTILĂ INTRAOCULARĂ Synthesis Plus Hydrophilic Yellow Preloaded +18.75D PYPLUS +18.75D	DM000334201
IMUNOTEHNOMED S.R.L.	CUTTING EDGE S.A.S.	Franta	LENTILĂ INTRAOCULARĂ Synthesis Plus Hydrophilic Yellow Preloaded +19.00D PYPLUS +19.00D	DM000334202
IMUNOTEHNOMED S.R.L.	CUTTING EDGE S.A.S.	Franta	LENTILĂ INTRAOCULARĂ Synthesis Plus Hydrophilic Yellow Preloaded +19.25D PYPLUS +19.25D	DM000334203
IMUNOTEHNOMED S.R.L.	CUTTING EDGE S.A.S.	Franta	LENTILĂ INTRAOCULARĂ Synthesis Plus Hydrophilic Yellow Preloaded +19.50D PYPLUS +19.50D	DM000334204
IMUNOTEHNOMED S.R.L.	CUTTING EDGE S.A.S.	Franta	LENTILĂ INTRAOCULARĂ Synthesis Plus Hydrophilic Yellow Preloaded +19.75D PYPLUS +19.75D	DM000334205
IMUNOTEHNOMED S.R.L.	CUTTING EDGE S.A.S.	Franta	LENTILĂ INTRAOCULARĂ Synthesis Plus Hydrophilic Yellow Preloaded +20.00D PYPLUS +20.00D	DM000334206
IMUNOTEHNOMED S.R.L.	CUTTING EDGE S.A.S.	Franta	LENTILĂ INTRAOCULARĂ Synthesis Plus Hydrophilic Yellow Preloaded +20.25D PYPLUS +20.25D	DM000334207
IMUNOTEHNOMED S.R.L.	CUTTING EDGE S.A.S.	Franta	LENTILĂ INTRAOCULARĂ Synthesis Plus Hydrophilic Yellow Preloaded +20.50D PYPLUS +20.50D	DM000334208
IMUNOTEHNOMED S.R.L.	CUTTING EDGE S.A.S.	Franta	LENTILĂ INTRAOCULARĂ Synthesis Plus Hydrophilic Yellow Preloaded +20.75D PYPLUS +20.75D	DM000334209
IMUNOTEHNOMED S.R.L.	CUTTING EDGE S.A.S.	Franta	LENTILĂ INTRAOCULARĂ Synthesis Plus Hydrophilic Yellow Preloaded +21.00D PYPLUS +21.00D	DM000334210
IMUNOTEHNOMED S.R.L.	CUTTING EDGE S.A.S.	Franta	LENTILĂ INTRAOCULARĂ Synthesis Plus Hydrophilic Yellow Preloaded +21.25D PYPLUS +21.25D	DM000334211
IMUNOTEHNOMED S.R.L.	CUTTING EDGE S.A.S.	Franta	LENTILĂ INTRAOCULARĂ Synthesis Plus Hydrophilic Yellow Preloaded +21.50D PYPLUS +21.50D	DM000334212
IMUNOTEHNOMED S.R.L.	CUTTING EDGE S.A.S.	Franta	LENTILĂ INTRAOCULARĂ Synthesis Plus Hydrophilic Yellow Preloaded +21.75D PYPLUS +21.75D	DM000334213
IMUNOTEHNOMED S.R.L.	CUTTING EDGE S.A.S.	Franta	LENTILĂ INTRAOCULARĂ Synthesis Plus Hydrophilic Yellow Preloaded +22.00D PYPLUS +22.00D	DM000334214
IMUNOTEHNOMED S.R.L.	CUTTING EDGE S.A.S.	Franta	LENTILĂ INTRAOCULARĂ Synthesis Plus Hydrophilic Yellow Preloaded +22.25D PYPLUS +22.25D	DM000334215
IMUNOTEHNOMED S.R.L.	CUTTING EDGE S.A.S.	Franta	LENTILĂ INTRAOCULARĂ Synthesis Plus Hydrophilic Yellow Preloaded +22.50D PYPLUS +22.50D	DM000334216
IMUNOTEHNOMED S.R.L.	CUTTING EDGE S.A.S.	Franta	LENTILĂ INTRAOCULARĂ Synthesis Plus Hydrophilic Yellow Preloaded +22.75D PYPLUS +22.75D	DM000334217
IMUNOTEHNOMED S.R.L.	CUTTING EDGE S.A.S.	Franta	LENTILĂ INTRAOCULARĂ Synthesis Plus Hydrophilic Yellow Preloaded +23.00D PYPLUS +23.00D	DM000334218
IMUNOTEHNOMED S.R.L.	CUTTING EDGE S.A.S.	Franta	LENTILĂ INTRAOCULARĂ Synthesis Plus Hydrophilic Yellow Preloaded +23.25D PYPLUS +23.25D	DM000334219
IMUNOTEHNOMED S.R.L.	CUTTING EDGE S.A.S.	Franta	LENTILĂ INTRAOCULARĂ Synthesis Plus Hydrophilic Yellow Preloaded +23.50D PYPLUS +23.50D	DM000334220
IMUNOTEHNOMED S.R.L.	CUTTING EDGE S.A.S.	Franta	LENTILĂ INTRAOCULARĂ Synthesis Plus Hydrophilic Yellow Preloaded +23.75D PYPLUS +23.75D	DM000334221
IMUNOTEHNOMED S.R.L.	CUTTING EDGE S.A.S.	Franta	LENTILĂ INTRAOCULARĂ Synthesis Plus Hydrophilic Yellow Preloaded +24.00D PYPLUS +24.00D	DM000334222
IMUNOTEHNOMED S.R.L.	CUTTING EDGE S.A.S.	Franta	LENTILĂ INTRAOCULARĂ Synthesis Plus Hydrophilic Yellow Preloaded +24.25D PYPLUS +24.25D	DM000334223
IMUNOTEHNOMED S.R.L.	CUTTING EDGE S.A.S.	Franta	LENTILĂ INTRAOCULARĂ Synthesis Plus Hydrophilic Yellow Preloaded +24.50D PYPLUS +24.50D	DM000334224
IMUNOTEHNOMED S.R.L.	CUTTING EDGE S.A.S.	Franta	LENTILĂ INTRAOCULARĂ Synthesis Plus Hydrophilic Yellow Preloaded +24.75D PYPLUS +24.75D	DM000334225
IMUNOTEHNOMED S.R.L.	CUTTING EDGE S.A.S.	Franta	LENTILĂ INTRAOCULARĂ Synthesis Plus Hydrophilic Yellow Preloaded +25.00D PYPLUS +25.00D	DM000334226
IMUNOTEHNOMED S.R.L.	CUTTING EDGE S.A.S.	Franta	LENTILĂ INTRAOCULARĂ Synthesis Plus Hydrophilic Yellow Preloaded +25.25D PYPLUS +25.25D	DM000334227
IMUNOTEHNOMED S.R.L.	CUTTING EDGE S.A.S.	Franta	LENTILĂ INTRAOCULARĂ Synthesis Plus Hydrophilic Yellow Preloaded +25.50D PYPLUS +25.50D	DM000334228

IMUNOTEHNOMED S.R.L.	CUTTING EDGE S.A.S.	Franta	LENTILĂ INTRAOCULARĂ Synthesis Plus Hydrophilic Yellow Preloaded +25.75D PYPLUS +25.75D	DM000334229
IMUNOTEHNOMED S.R.L.	CUTTING EDGE S.A.S.	Franta	LENTILĂ INTRAOCULARĂ Synthesis Plus Hydrophilic Yellow Preloaded +26.00D PYPLUS +26.00D	DM000334230
IMUNOTEHNOMED S.R.L.	CUTTING EDGE S.A.S.	Franta	LENTILĂ INTRAOCULARĂ Synthesis Plus Hydrophilic Yellow Preloaded +26.25D PYPLUS +26.25D	DM000334231
IMUNOTEHNOMED S.R.L.	CUTTING EDGE S.A.S.	Franta	LENTILĂ INTRAOCULARĂ Synthesis Plus Hydrophilic Yellow Preloaded +26.50D PYPLUS +26.50D	DM000334232
IMUNOTEHNOMED S.R.L.	CUTTING EDGE S.A.S.	Franta	LENTILĂ INTRAOCULARĂ Synthesis Plus Hydrophilic Yellow Preloaded +26.75D PYPLUS +26.75D	DM000334233
IMUNOTEHNOMED S.R.L.	CUTTING EDGE S.A.S.	Franta	LENTILĂ INTRAOCULARĂ Synthesis Plus Hydrophilic Yellow Preloaded +27.00D PYPLUS +27.00D	DM000334234
IMUNOTEHNOMED S.R.L.	CUTTING EDGE S.A.S.	Franta	LENTILĂ INTRAOCULARĂ Synthesis Plus Hydrophilic Yellow Preloaded +27.25D PYPLUS +27.25D	DM000334235
IMUNOTEHNOMED S.R.L.	CUTTING EDGE S.A.S.	Franta	LENTILĂ INTRAOCULARĂ Synthesis Plus Hydrophilic Yellow Preloaded +27.50D PYPLUS +27.50D	DM000334236
IMUNOTEHNOMED S.R.L.	CUTTING EDGE S.A.S.	Franta	LENTILĂ INTRAOCULARĂ Synthesis Plus Hydrophilic Yellow Preloaded +27.75D PYPLUS +27.75D	DM000334237
IMUNOTEHNOMED S.R.L.	CUTTING EDGE S.A.S.	Franta	LENTILĂ INTRAOCULARĂ Synthesis Plus Hydrophilic Yellow Preloaded +28.00D PYPLUS +28.00D	DM000334238
IMUNOTEHNOMED S.R.L.	CUTTING EDGE S.A.S.	Franta	LENTILĂ INTRAOCULARĂ Synthesis Plus Hydrophilic Yellow Preloaded +28.25D PYPLUS +28.25D	DM000334239
IMUNOTEHNOMED S.R.L.	CUTTING EDGE S.A.S.	Franta	LENTILĂ INTRAOCULARĂ Synthesis Plus Hydrophilic Yellow Preloaded +28.50D PYPLUS +28.50D	DM000334240
IMUNOTEHNOMED S.R.L.	CUTTING EDGE S.A.S.	Franta	LENTILĂ INTRAOCULARĂ Synthesis Plus Hydrophilic Yellow Preloaded +28.75D PYPLUS +28.75D	DM000334241
IMUNOTEHNOMED S.R.L.	CUTTING EDGE S.A.S.	Franta	LENTILĂ INTRAOCULARĂ Synthesis Plus Hydrophilic Yellow Preloaded +29.00D PYPLUS +29.00D	DM000334242
IMUNOTEHNOMED S.R.L.	CUTTING EDGE S.A.S.	Franta	LENTILĂ INTRAOCULARĂ Synthesis Plus Hydrophilic Yellow Preloaded +29.25D PYPLUS +29.25D	DM000334243
IMUNOTEHNOMED S.R.L.	CUTTING EDGE S.A.S.	Franta	LENTILĂ INTRAOCULARĂ Synthesis Plus Hydrophilic Yellow Preloaded +29.50D PYPLUS +29.50D	DM000334244
IMUNOTEHNOMED S.R.L.	CUTTING EDGE S.A.S.	Franta	LENTILĂ INTRAOCULARĂ Synthesis Plus Hydrophilic Yellow Preloaded +29.75D PYPLUS +29.75D	DM000334245
IMUNOTEHNOMED S.R.L.	CUTTING EDGE S.A.S.	Franta	LENTILĂ INTRAOCULARĂ Synthesis Plus Hydrophilic Yellow Preloaded +30.00D PYPLUS +30.00D	DM000334246
IMUNOTEHNOMED S.R.L.	CUTTING EDGE S.A.S.	Franta	LENTILĂ INTRAOCULARĂ Synthesis Plus Hydrophilic Yellow Preloaded +30.25D PYPLUS +30.25D	DM000334247
IMUNOTEHNOMED S.R.L.	CUTTING EDGE S.A.S.	Franta	LENTILĂ INTRAOCULARĂ Synthesis Plus Hydrophilic Yellow Preloaded +30.50D PYPLUS +30.50D	DM000334248
IMUNOTEHNOMED S.R.L.	CUTTING EDGE S.A.S.	Franta	LENTILĂ INTRAOCULARĂ Synthesis Plus Hydrophilic Yellow Preloaded +30.75D PYPLUS +30.75D	DM000334249
IMUNOTEHNOMED S.R.L.	CUTTING EDGE S.A.S.	Franta	LENTILĂ INTRAOCULARĂ Synthesis Plus Hydrophilic Yellow Preloaded +31.00D PYPLUS +31.00D	DM000334250
IMUNOTEHNOMED S.R.L.	CUTTING EDGE S.A.S.	Franta	LENTILĂ INTRAOCULARĂ Synthesis Plus Hydrophilic Yellow Preloaded +31.25D PYPLUS +31.25D	DM000334251
IMUNOTEHNOMED S.R.L.	CUTTING EDGE S.A.S.	Franta	LENTILĂ INTRAOCULARĂ Synthesis Plus Hydrophilic Yellow Preloaded +31.50D PYPLUS +31.50D	DM000334252
IMUNOTEHNOMED S.R.L.	CUTTING EDGE S.A.S.	Franta	LENTILĂ INTRAOCULARĂ Synthesis Plus Hydrophilic Yellow Preloaded +31.75D PYPLUS +31.75D	DM000334253
IMUNOTEHNOMED S.R.L.	CUTTING EDGE S.A.S.	Franta	LENTILĂ INTRAOCULARĂ Synthesis Plus Hydrophilic Yellow Preloaded +32.00D PYPLUS +32.00D	DM000334254