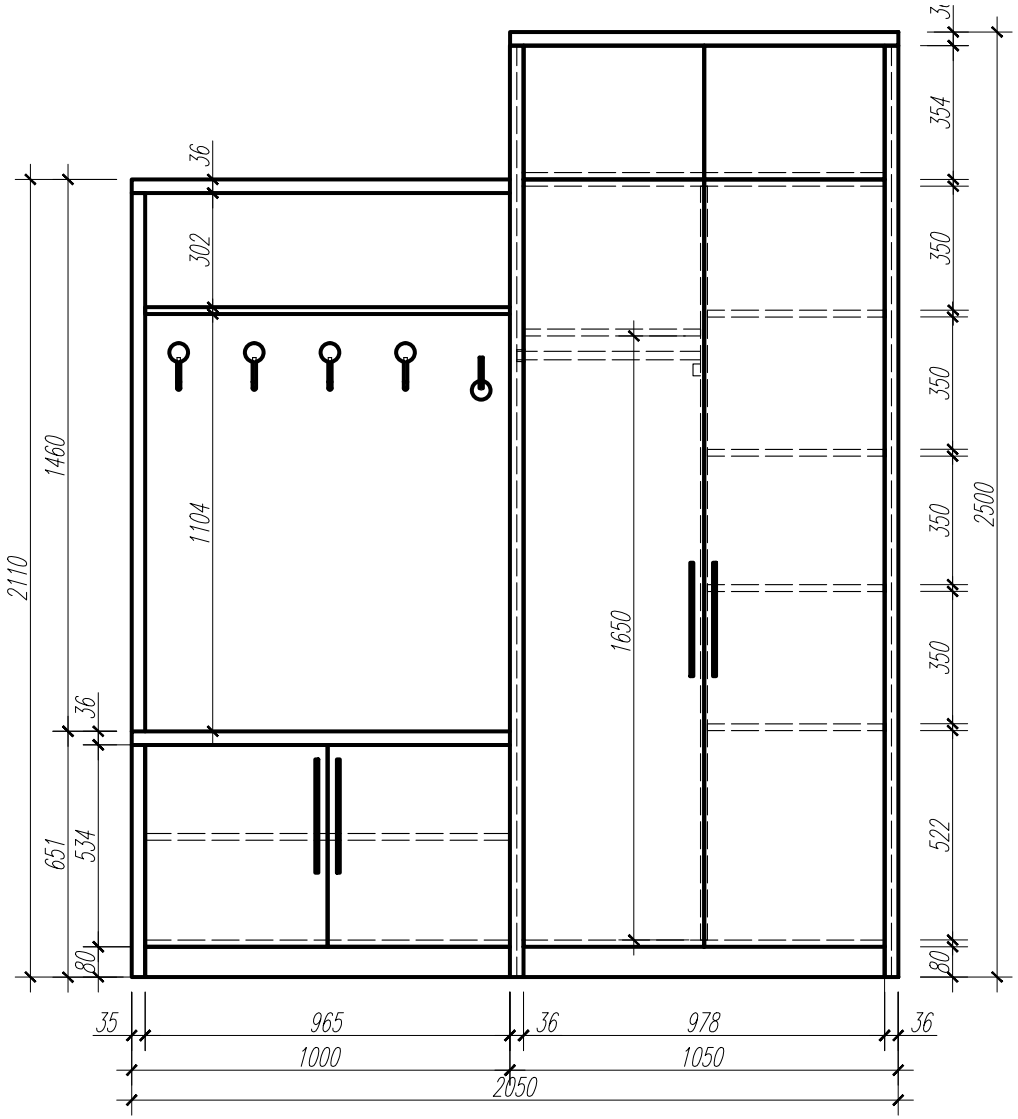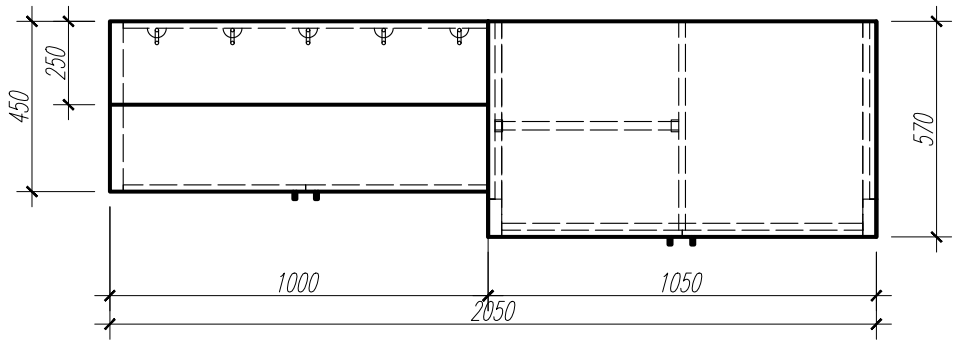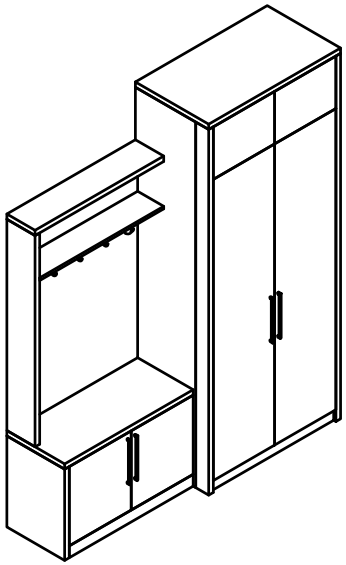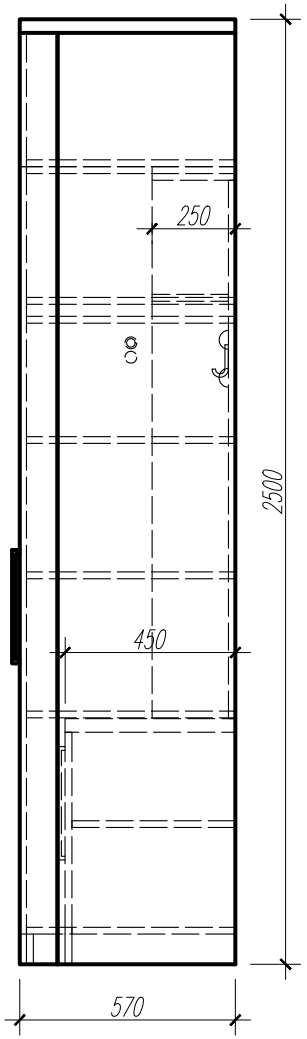Client: USMF
Dulap haine