INVERTER

INVERTER AIR SOURCE HEAT PUMP
MONOBLOC INVERTER SERIES

USER'S & INSTALLATION MANUAL

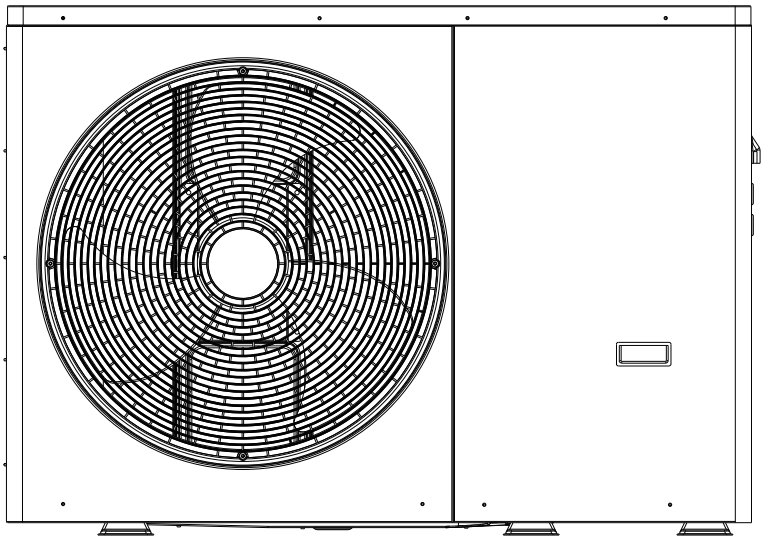

Models:

KS-40W/EN8BP, KS-60W/EN8BP, KS-80W/EN8BP, KS-100W/EN8BP

KS-120W/EN8BP, KS-140W/EN8BP, KS-160W/EN8BP

KS-120W/EN8SBP, KS-140W/EN8SBP, KS-160W/EN8SBP

Digitally signed by Moloșag Eugeniu
Date: 2023.06.19 09:34:57 EEST
Reason: MoldSign Signature
Location: Moldova

R32

CONTENTS

1 SAFETY PRECAUTIONS 02

2 GENERAL INTRODUCTION 05

3 ACCESSORIES 06

- 3.1 Accessories supplied with the unit 06
- 3.2 Accessories avaliable from supplier 06

4 BEFORE INSTALLATION 06

5 IMPORTANT INFORMATION FOR THE REFRIGERANT 07

6 INSTALLATION SITE 08

- 6.1 Selecting a location in cold climates 09
- 6.2 Selecting a location in hot climates 09

7 INSTALLATION PRECAUTIONS 10

- 7.1 Dimensions 10
- 7.2 Installation requirements 10
- 7.3 Drain hole position 11
- 7.4 Servicing space requirements 11

8 TYPICAL APPLICATIONS 13

- 8.1 Application 1 13
- 8.2 Application 2 15
- 8.3 Balance tank volume requirement 18

9 OVERVIEW THE UNIT 18

- 9.1 Disassembling the unit 18
- 9.2 Main components 19
- 9.3 Electronic control box 20
- 9.4 Water piping 29
- 9.5 Filling water 32
- 9.6 Water piping insulation 33
- 9.7 Field wiring 33

10 START-UP AND CONFIGURATION 44

- 10.1 DIP switch settings overview 44

• 10.2 Initial start-up at low outdoor ambient temperature 44
• 10.3 Pre-operation checks 44
• 10.4 The circulation pump 45
• 10.5 Field settings 45
11 TEST RUN AND FINAL CHECK 52
• 11.1 Final checks 52
12 MAINTENANCE AND SERVICE 52
13 TROUBLE SHOOTING 53
• 13.1 General guidelines 53
• 13.2 General symptoms 54
• 13.3 Operation parameter 55
• 13.4 Error codes 56
14 TECHNICAL SPECIFICATIONS 62
• 14.1 General 62
• 14.2 Electrical specifications 62
• 14.3 General(3-Phase) 63
• 14.4 Electrical specifications(3-Phase) 63
15 INFORMATION SERVICING 64

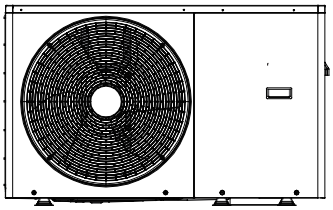

4/6/8 kW

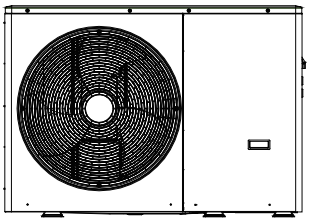

10/12 kW

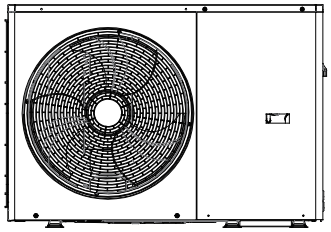

14/16 kW

Internal layout:14~16kW(1-phase) for example

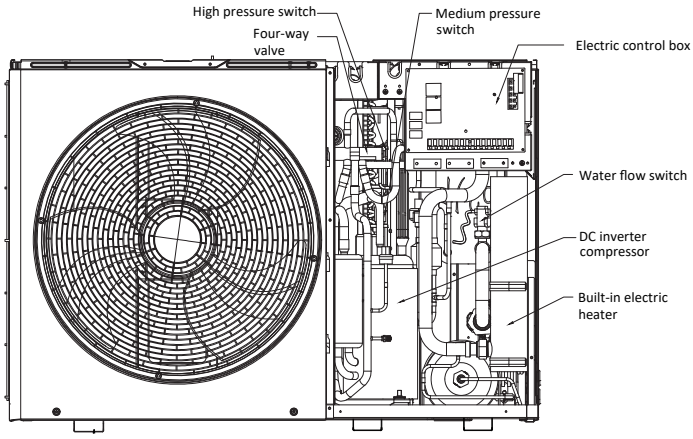

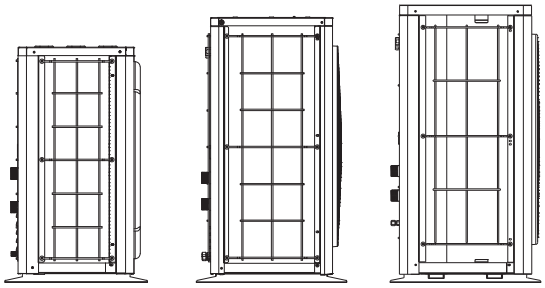

4/6/8 kW 10/12 kW 14/16 kW

Please remove the hollow plate after installation.

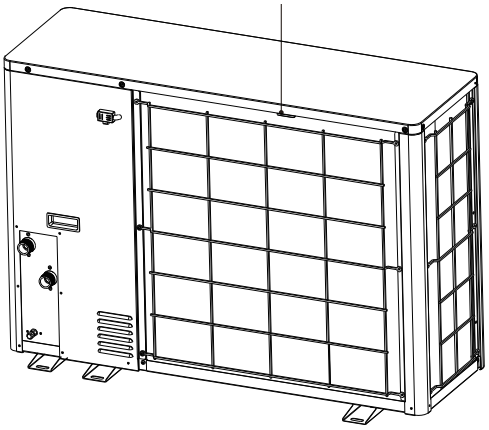

NOTE

The picture and function described in this manual contain the backup heater components.
Pictures in this manual are for reference only, please refer to the actual product.

Unit	1-phase						3-phase		
	4	6	8	10	12	14/16	12	14	16
Capacity of backup heater	3kW(1-phase) KS-40W/EN8BP,KS-60W/EN8BP,KS-80W/EN8BP KS-120W/EN8BP,KS-140W/EN8BP,KS-160W/EN8BP						9kW(3-phase) KS-120W/EN8SBP,KS-140W/EN8SBP KS-160W/EN8SBP		
Models with backup heater: KS-40W/EN8BP,KS-60W/EN8BP,KS-80W/EN8BP,KS-120W/EN8BP,KS-140W/EN8BP KS-160W/EN8BP,KS-120W/EN8SBP,KS-140W/EN8SBP,KS-160W/EN8SBP									

1 SAFETY PRECAUTIONS

The precautions listed here are divided into the following types.They are quite important, so be sure to follow them carefully.

Meanings of DANGER, WARNING, CAUTION and NOTE symbols.

INFORMATION

- Read these instructions carefully before installation. Keep this manual in a handy for future reference.
- Improper installation of equipment or accessories may result in electric shock, short-circuit, leakage, fire or other damage to the equipment. Be sure to only use accessories made by the supplier, which are specifically designed for the equipment and make sure to get installation done by a professional.
- All the activities described in this manual must be carried out by a licensed technician. Be sure to wear adequate personal protection equipment such as gloves and safety glasses while installing the unit or carrying out maintenance activities.
- Contact your dealer for any further assistance.

Caution:Risk of fire/
flammable materials

⚠ WARNING

Servicing shall only be performed as recommended by the equipment manufacturer. Maintenance and repair requiring the assistance of other skilled personnel shall be carried out under the supervision of the person competent in the use of flammable refrigerants.

⚠ DANGER

Indicates an imminently hazardous situation which if not avoided, will result in death or serious injury.

⚠ WARNING

Indicates a potentially hazardous situation which if not avoided, could result in death or serious injury.

⚠ CAUTION

Indicates a potentially hazardous situation which if not avoided, may result in minor or moderate injury.
It is also used to alert against unsafe practices.

NOTE

Indicates situations that could only result in accidental equipment or property damage.

Explanation of symbols displayed on the monobloc

	WARNING	This symbol shows that this appliance used a flammable refrigerant. If the refrigerant is leaked and exposed to an external ignition source, there is a risk of fire.
	CAUTION	This symbol shows that the operation manual should be read carefully.
	CAUTION	This symbol shows that a service personnel should be handling this equipment with reference to the installation manual.
	CAUTION	This symbol shows that a service personnel should be handling this equipment with reference to the installation manual.
	CAUTION	This symbol shows that information is available such as the operating manual or installation manual.

⚠ DANGER

- Before touching electric terminal parts, turn off power switch.
- When service panels are removed, live parts can be easily touched by accident.
- Never leave the unit unattended during installation or servicing when the service panel is removed.
- Do not touch water pipes during and immediately after operation as the pipes may be hot and could burn your hands. To avoid injury, give the piping time to return to normal temperature or be sure to wear protective gloves.
- Do not touch any switch with wet fingers. Touching a switch with wet fingers can cause electrical shock.
- Before touching electrical parts, turn off all applicable power to the unit.

⚠ WARNING

- Tear apart and throw away plastic packaging bags so that children will not play with them.Children playing with plastic bags face danger of death by suffocation.
- Safely dispose of packing materials such as nails and other metal or wood parts that could cause injuries.
- Ask your dealer or qualified personnel to perform installation work in accordance with this manual. Do not install the unit yourself. Improper installation could result in water leakage, electric shocks or fire.
- Be sure to use only specified accessories and parts for installation work. Failure to use specified parts may result in water leakage, electric shocks, fire, or the unit falling from its mount.
- Install the unit on a foundation that can withstand its weight. Insufficient physical strength may cause the equipment to fall and possible injury.
- Perform specified installation work with full consideration of strong wind, hurricanes, or earthquakes. Improper installation work may result in accidents due to equipment falling.
- Make certain that all electrical work is carried out by qualified personnel according to the local laws and regulations and this manual using a separate circuit. Insufficient capacity of the power supply circuit or improper electrical construction may lead to electric shocks or fire.
- Be sure to install a ground fault circuit interrupter according to local laws and regulations. Failure to install a ground fault circuit interrupter may cause electric shocks and fire.
- Make sure all wiring is secure. Use the specified wires and ensure that terminal connections or wires are protected from water and other adverse external forces. Incomplete connection or affixing may cause a fire.
- When wiring the power supply, form the wires so that the front panel can be securely fastened. If the front panel is not in place there could be overheating of the terminals, electric shocks or fire.
- After completing the installation work, check to make sure that there is no refrigerant leakage.
- Never directly touch any leaking refrigerant as it could cause severe frostbite.Do not touch the refrigerant pipes during and immediately after operation as the refrigerant pipes may be hot or cold, depending on the condition of the refrigerant flowing through the refrigerant piping, compressor and other refrigerant cycle parts. Burns or frostbite are possible if you touch the refrigerant pipes. To avoid injury, give the pipes time to return to normal temperature or, if you must touch them,be sure to wear protective gloves.
- Do not touch the internal parts (pump, backup heater, etc.) during and immediately after operation. Touching the internal parts can cause burns. To avoid injury, give the internal parts time to return to normal temperature or, if you must touch them, be sure to wear protective gloves.

⚠ CAUTION

- Ground the unit.
- Grounding resistance should be according to local laws and regulations.
- Do not connect the ground wire to gas or water pipes, lightning conductors or telephone ground wires.
- Incomplete grounding may cause electric shocks.

  - Gas pipes：Fire or an explosion might occur if the gas leaks.

  - Water pipes：Hard vinyl tubes are not effective grounds.

  - Lightning conductors or telephone ground wires：Electrical threshold may rise abnormally if struck by a lightning bolt.
- Install the power wire at least 3 feet (1 meter) away from televisions or radios to prevent interference or noise. (Depending on the radio waves, a distance of 3 feet (1 meter) may not be sufficient to eliminate the noise.)
- Do not wash the unit. This may cause electric shocks or fire. The appliance must be installed in accordance with national wiring regulations. If the supply cord is damaged, it must be replaced by the manufacturer, its service agent or similarly qualified persons in order to avoid a hazard.

- Do not install the unit in the following places:

  - Where there is mist of mineral oil, oil spray or vapors. Plastic parts may deteriorate, and cause them to come loose or water to leak.

  - Where corrosive gases (such as sulphurous acid gas) are produced. Where corrosion of copper pipes or soldered parts may cause refrigerant to leak.

  - Where there is machinery which emits electromagnetic waves. Electromagnetic waves can disturb the control system and cause equipment malfunction.

  - Where flammable gases may leak, where carbon fiber or ignitable dust is suspended in the air or where volatile flammables such as paint thinner or gasoline are handled. These types of gases might cause a fire.

  - Where the air contains high levels of salt such as near the ocean.

  - Where voltage fluctuates a lot, such as in factories.

  - In vehicles or vessels.

  - Where acidic or alkaline vapors are present.
- This appliance can be used by children 8 years old and above and persons with reduced physical, sensory or mental capabilities or lack of experience and knowledge if they are supervised or given instruction on using the unit in a safe manner and understand the hazards involved. Children should not play with the unit. Cleaning and user maintenance should not be done by children without supervision.
- Children should be supervised to ensure that they do not play with the appliance.
- If the supply cord is damaged, it must be replaced by the manufaturer or its service agent or a similarly qualified person.
- DISPOSAL: Do not dispose this product as unsorted municipal waste. Collection of such waste seperatelly for special treatment is necessary. Do not dispose of electrical appliances as municipal waste, use seperate collection facilities. Contact your local goverment for information regarding the collection systems available. If electrical appliances are disposed of in landfills or dumps, hazardous substance can leak into the groudwater and get into the food chain, damaging your health and well-being.
- The wiring must be performed by professional technicians in accordance with national wiring regulation and this circuit diagram. An all-pole disconnection device which has at least 3mm seperation distance in all pole and a residualcurrent device(RCD) with the rating not exceeding 30mA shall be incorporated in the fixed wiring according to the national rule.
- Confirm the safety of the installation area (walls, floors, etc.) without hidden dangers such as water, electricity, and gas.Before wiring/pipes.
- Before installation , check whether the user's power supply meets the electrical installation requirements of unit (including reliable grounding , leakage , and wire diameter electrical load, etc.). If the electrical installation requirements of the product are not met, the installation of the product is prohibited until the product is rectified.
- When installing multiple air conditioners in a centralized manner, please confirm the load balance of the three-phase power supply, and multiple units are prevented from being assembled into the same phase of the three-phase power supply.
- Product installation should be fixed firmly. Take reinforcement measures, when necessary.

NOTE

- About Fluorinated Gasses

  - This air-conditioning unit contains fluorinated gasses. For specific information on the type of gas and the amount, please refer to the relevant label on the unit itself. Compliance with national gas regulations shall be observed.

  - Installation, service, maintenance and repair of this unit must be performed by a certified technician.

  - Product uninstallation and recycling must be performed by a certified technician.

  - If the system has a leak-detection system installed, it must be checked for leaks at least every 12 months. When the unit is checked for leaks, proper record-keeping of all checks is strongly recommended.

2 GENERAL INTRODUCTION

- These units are used for both heating and cooling applications and domestic hot water tanks.They can be combined with fan coil units, floor heating applications, low temperature high efficiency radiators, domestic hot water tanks and solar kits, which are all field supplied.
- A wired controller is supplied with the unit .
- If you choose the built-in backup heater unit, the backup heater can increase the heating capacity during cold outdoor temperature. The backup heater also serves as a backup in case of malfunctioning and for frozen protection of the outside water piping during winter time.

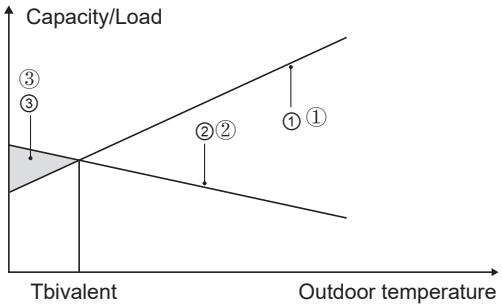

①Heat pump capacity.

②Required heating capacity (site dependent).

③Additional heating capacity provided by backup heater.

Domestic hot water tank (field supply)

A domestic hot water tank(with or without booster heater) can be connected to the unit.

The requirement of the tank is different for different unit and material of heat exchanger.

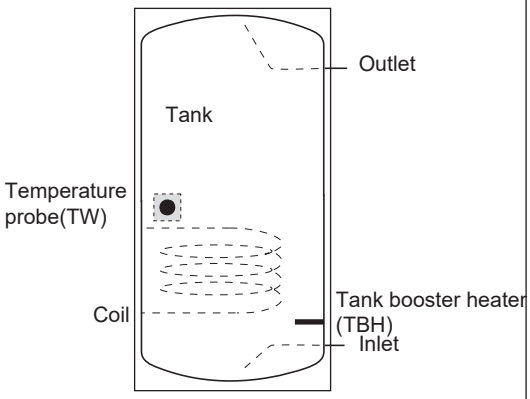

The booster heater should be installed below the temperature probe (TW).

The heat exchanger (coil) should be installed below the temperature probe.

The pipe length between the outdoor unit and tank should be less than 5 meters.

Model		4~6kW	8~10kW	12~16kW
Volume of tank/L	Recommended	100~250	150~300	200~500
Heat exchange area/m^2 (Stainless steel coil)	Minimum	1.4	1.4	1.6
Heat exchange area/m^2 (Enamel coil)	Minimum	2.0	2.0	2.5

Room thermostat(field supplied)

Room thermostat can be connected to the unit(room thermostat should be kept away from heating source when selecting the installation place).

Solar kit for domestic hot water tank(field supplied)

Operation range

Outlet water (Heating mode)		+12 ~ +65℃
Outlet water (Cooling mode)		+5 ~ +25℃
Domestic hot water		+12 ~ +60℃
Ambient temperature		5 ~ +35℃
Water pressure		0.1~0.3MPa
Water flow	4kW	10~20lt/minute
	6kW	10~20lt/minute
	8kW	10~35lt/minute
	10kW	10~35lt/minute
	12kW	10~50lt/minute
	14kW	10~50lt/minute
	16kW	10~50lt/minute

The unit have a freeze prevention function that uses the heat pump or backup heater（Customized model） to keep the water system safe from freezing in all conditions. (Refer to 9.4“Water piping”).

In cooling mode, the water flowing temperature (TW_out) range in different outdoor temperature(T4) is listed below:

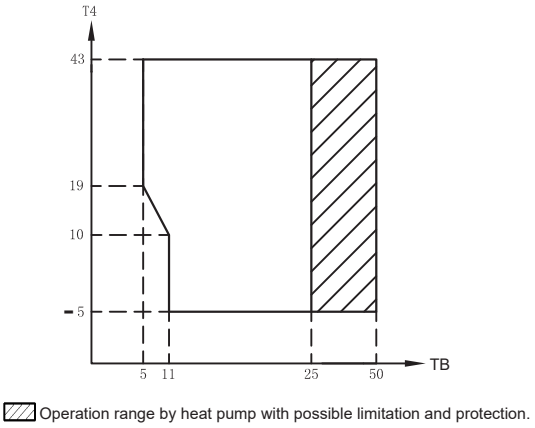

In heating mode, the water flowing temperature (TW_out) range in different outdoor temperature (T4) is listed below:

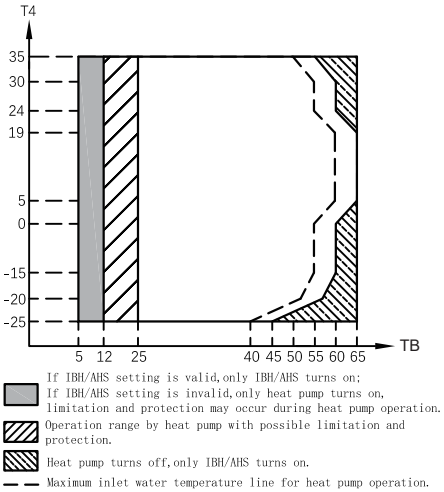

In DHW mode, the water flowing temperature(TB) range in different outdoor temperature(T4) is listed below:

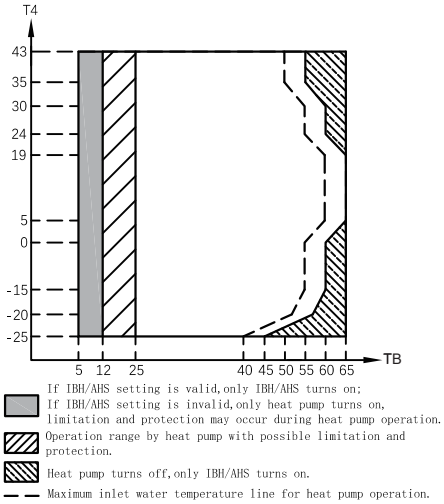

3 ACCESSORIES

3.1 Accessories supplied with the unit

Installation Fittings		
Name	Shape	Quantity
Installation and owner's manual		1
Wired controller manual		1
Product fiche		1
Y-shape filter		1
Wired controller		1
20m extension cord		1
Water outlet connection pipe assembly		1
Energy label		1
Shockproof		6
DHW sensor(8m)		1

3.2 Accessories from local supplier

Thermistor for balance tank(TE 1)		1
Extension wire for TE 1(Reserved)		1
Thermistor for Zone 2 flow temp.(TZ2)		1
Extension wire for TZ2		1
Thermistor for solar temp.(Tsolar)		1
Extension wire for Tsolar		1

Thermistor and extension wire for TE1, TZ2 can be shared , and Tsolar TW also can be shared, if these functions are needed at the same time,and 8m in length of the sensor cable please order these thermistors and extension wire additionally.

4 BEFORE INSTALLATION

- Before installation
  Be sure to confirm the model name and the serial number of the unit.
- Handling
  Due to relatively large dimensions and heavy weight, the unit should only be handled using lifting tools with slings. The slings can be fitted into foreseen sleeves at the base frame that are made specifically for this purpose.

⚠ CAUTION

- To avoid injury, do not touch the air inlet or aluminum fins of the unit.
- Do not use the grips in the fan grills to avoid damage.
- The unit is top heavy! Prevent the unit from falling due to improper inclination during handling.

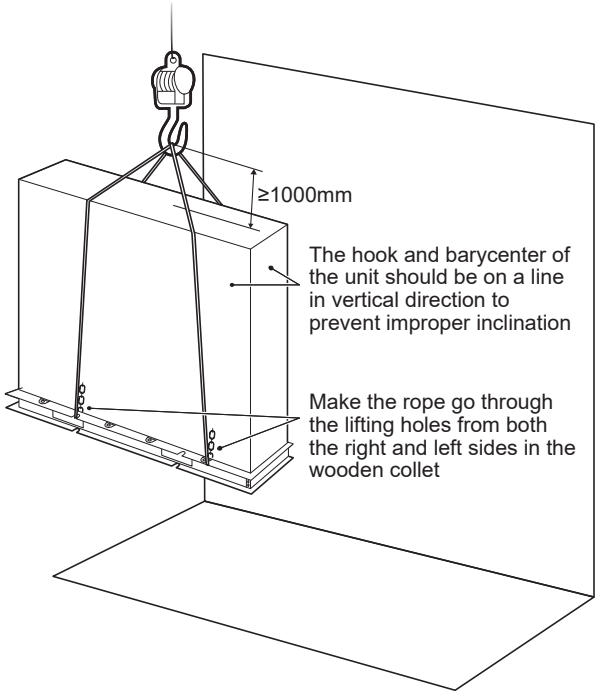

Model	A	B	C
1 phase 4/6/8kW	470	460	220
1 phase 10/12kW	450	440	230
1 phase 14/16kW	500	490	235
3 phase 12kW	450	440	230
3 phase 14/16kW	500	490	235

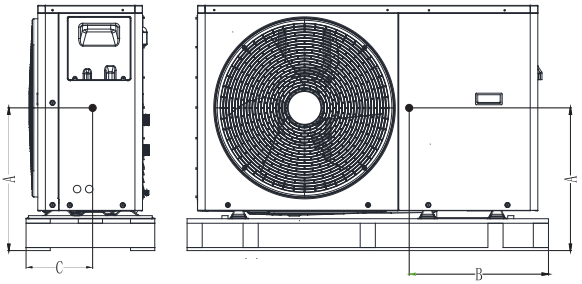

4/6/8 kW (unit:mm)

The position of barycenter for different units can be seen in the picture below.

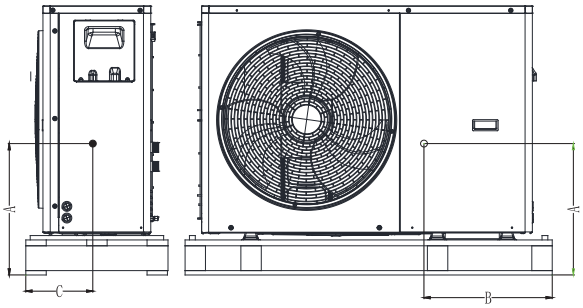

10/12 kW (unit:mm)

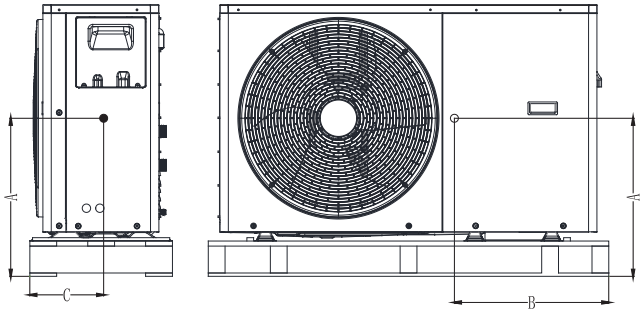

14/16 kW (unit:mm)

5 IMPORTANT INFORMATION FOR THE REFRIGERANT

This product has the fluorinated gas, which is forbidden to release to air.

Refrigerant type: R32; Volume of GWP: 675.

GWP=Global Warming Potential

Model	Factory charged refrigerant volume in the unit	
	Refrigerant/kg	Tonnes CO_2 equivalent
4kW (1 Phase)	1.05	0.709
6kW (1 Phase)	1.20	0.810
8kW (1 Phase)	1.30	0.878
10kW (1 Phase)	1.50	1.013
12kW (1 Phase)	1.75	1.181
14kW (1 Phase)	2.10	1.417
16kW (1 Phase)	2.10	1.417
12kW (3 Phase)	1.75	1.181
14kW (3 Phase)	2.10	1.417
16kW (3 Phase)	2.10	1.417

⚠ CAUTION

- Frequency of Refrigerant Leakage Checks

  - For unit that contains fluorinated greenhouse gases in quantities of 5 tonnes of CO_2 equivalent or more,but of less than 50 tonnes of CO_2 equivalent,at least every 12 months, or where a leakage detection system is installed, at least every 24 months.

  - For unit that contains fluorinated greenhouse gases in quantities of 50 tonnes of CO_2 equivalent or more, but of less than 500 tonnes of CO_2 equivalentat least every six months, or where a leakage detection system is installed, at least every 12 months.

  - For unit that contains fluorinated greenhouse gases in quantities of 500 tonnes of CO_2 equivalent or more,at least every three months, or where a leakage detection system is installed,at least every six months.

  - This air-conditioning unit is a hermetically sealed equipment that contains fluorinated greenhouse gases.

  - Only certificated person is allowed to do installation, operation and maintenance.

6 INSTALLATION SITE

⚠ WARNING

- There is flammable refrigerant in the unit and it should be installed in a well-ventilated site. If the unit is installed inside, an additional refrigerant detection device and ventilation equipment must be added in accordance with the standard EN378. Be sure to adopt adequate measures to prevent the unit from being used as a shelter by small animals.
- Small animals making contact with electrical parts can cause malfunction, smoke or fire. Please instruct the customer to keep the area around the unit clean.

- Select an installation site where the following condtions are satisfied and one that meets with your customer's approval.

  - Places that are well-ventilated.

  - Places where the unit does not disturb neighbors.

  - Safe places which can bear the unit's weight and vibration and where the unit can be installed at an even level.

  - Places where there is no possibility of flammable gas or product leak.

  - The equipment is not intended for use in a potentially explosive atmosphere.

  - Places where servicing space can be well ensured.

  - Places where the units' piping and wiring lengths come within the allowable ranges.

  - Places where water leaking from the unit cannot cause damage to the location (e.g. in case of a blocked drain pipe).

  - Places where rain can be avoided as much as possible.

  - Do not install the unit in places often used as a work space. In case of construction work (e.g. grinding etc.) where a lot of dust is created, the unit must be covered.

  - Do not place any object or equipment on top of the unit (top plate).

  - Do not climb, sit or stand on top of the unit.

  - Be sure that sufficient precautions are taken in case of refrigerant leakage according to relevant local laws and regulations.

  - Don’t install the unit near the sea or where there is corrosion gas.

- When installing the unit in a place exposed to strong wind, pay special attention to the following.

  Strong winds of 5 m/sec or more blowing against the unit's air outlet causes a short circuit (suction of discharge air), and this may have the following consequences:

  - Deterioration of the operational capacity.

  - Frequent frost acceleration in heating operation.

  - Disruption of operation due to rise of high pressure.

  - When a strong wind blows continuously on the front of the unit, the fan can start rotating very fast until it breaks.

  In normal condition,refer to the figures below for installation of the unit:

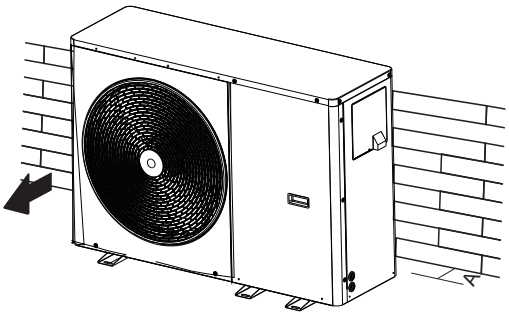

Unit	A(mm)
4~16kW	≥300

In case of strong wind and the wind direction can be foreseen,refer to the figures below for installation of the unit(any one is OK):

Turn the air outlet side toward the building's wall, fence or screen.

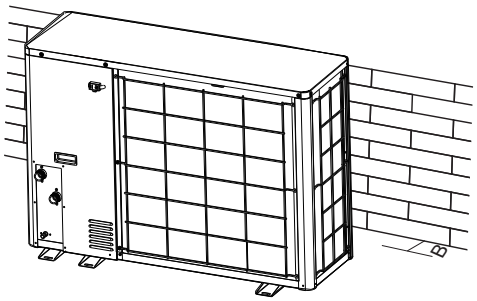

Unit	B(mm)
4~6kW	≥1000
8~16kW	≥1500

Make sure there is enough room to do the installation.

Set the outlet side at a right angle to the direction of the wind.

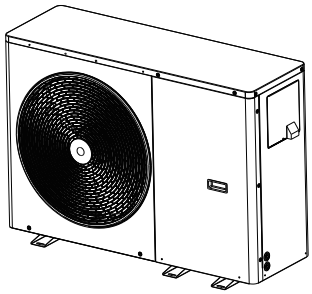

- Prepare a water drainage channel around the foundation, to drain waste water from around the unit.
- If water does not easily drain from the unit, mount the unit on a foundation of concrete blocks, etc. (the height of the foundation should be about 100 mm (3.93 in).
- If you install the unit on a frame, please install a waterproof plate (about 100 mm) on the underside of the unit to prevent water from coming in from the low side.
- When installing the unit in a place frequently exposed to snow, pay special attention to elevate the foundation as high as possible.
- If you install the unit on a building frame, please install a waterproof tray (field supply) (about 100mm, on the underside of the unit) in order to avoid drain water dripping. (See the picture in the right).

6.1 Selecting a location in cold climates

Refer to "Handling" in section “4 Before installation”

NOTE

When operating the unit in cold climates, be sure to follow the instructions described below.

- To prevent exposure to wind, install the unit with its suction side facing the wall.
- Never install the unit at a site where the suction side may be exposed directly to wind.
- To prevent exposure to wind, install a baffle plate on the air discharge side of the unit.
- In heavy snowfall areas, it is very important to select an installation site where the snow will not affect the unit. If lateral snowfall is possible, make sure that the heat exchanger coil is not affected by the snow (if necessary construct a lateral canopy).

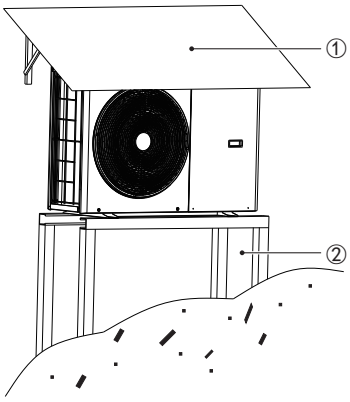

① Construct a large canopy.

② Construct a pedestal.
Install the unit high enough off the ground to prevent it from being buried in snow.

6.2 Selecting a location in hot climates

As the outdoor temperature is measured via the outdoor unit air thermistor, make sure to install the outdoor unit in the shade or a canopy should be constructed to avoid direct sunlight, so that it is not influenced by the sun’s heat, otherwise protection may be possible to the unit.

7 INSTALLATION PRECAUTIONS

7.1 Dimensions

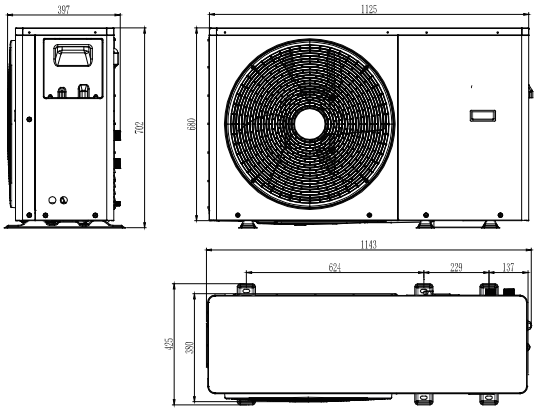

4/6/8kW

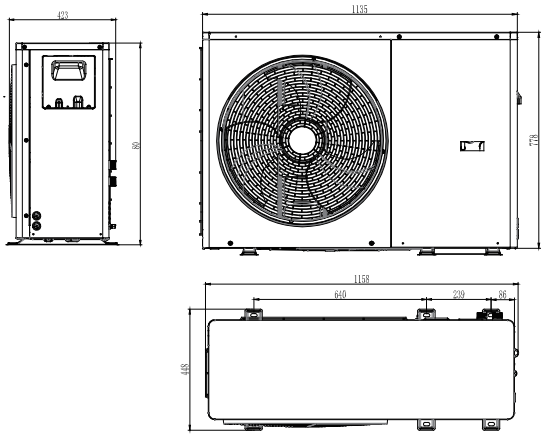

10/12kW

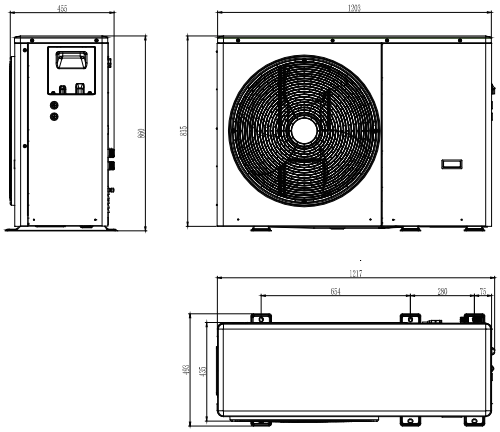

14/16kW

7.2 Installation requirements

- Check the strength and level of the installation ground so that the unit may not cause any vibrations or noise during its operation.
- In accordance with the foundation drawing in the figure, fix the unit securely by means of foundation bolts. (Prepare four sets each of Φ10 Expansion bolts, nuts and washers which are readily available in the market.)
- Screw in the foundation bolts until their length is 20 mm from the foundation surface.

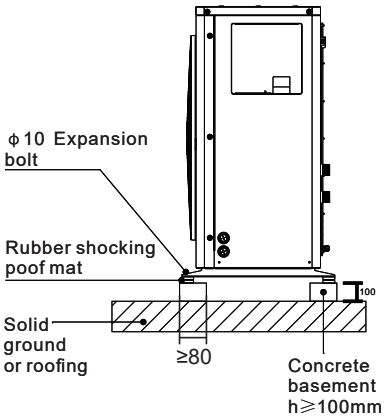

(unit: mm)

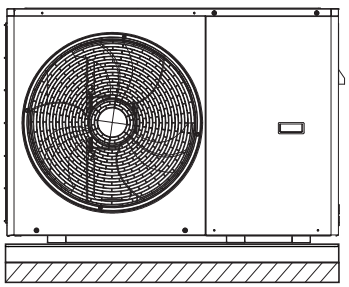

7.3 Drain hole position

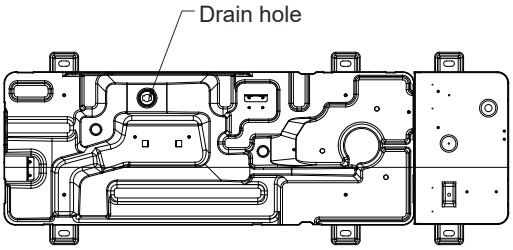

4/6/8 kW

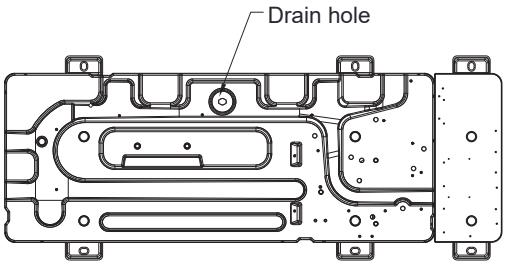

14/16 kW

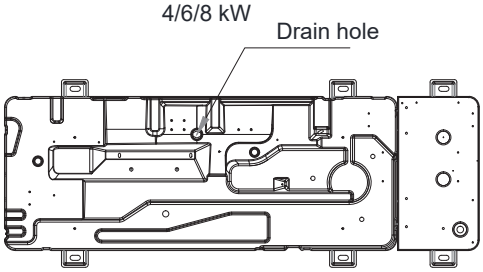

10/12 kW

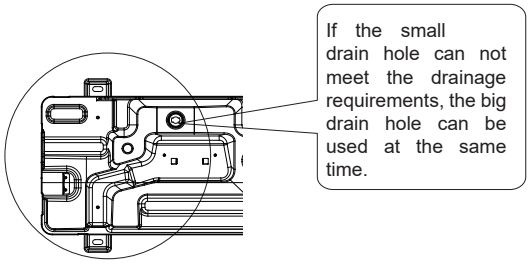

NOTE

It's necessary to install an electrical heating belt if water can't drain out in cold weather even the big drain hole has opened.

7.4 Servicing space requirements

7.4.1 In case of stacked installation

1) In case obstacles exist in front of the outlet side.

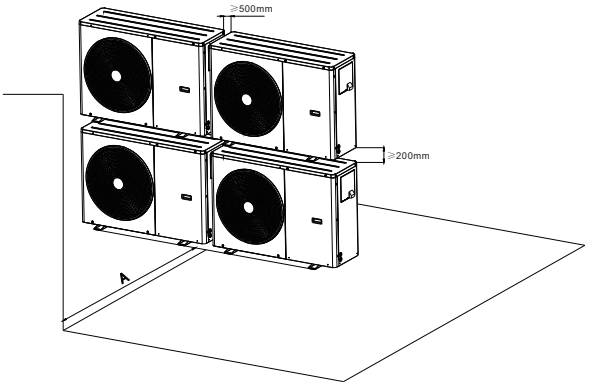

2) In case obstacles exist in front of the air inlet.

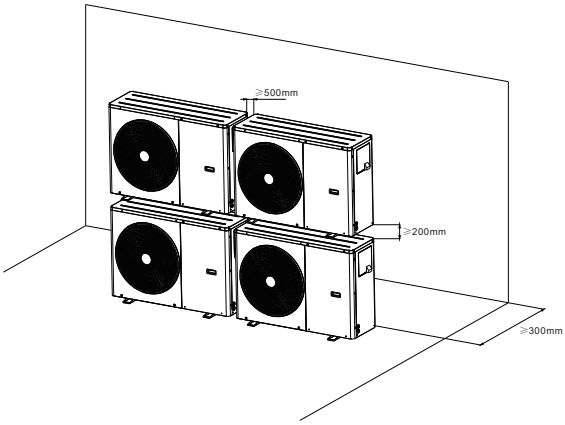

Unit	A(mm)
4~12kW	≥1000
14~16kW	≥1500

7.4.2 In case of multiple-row installation (for roof top use, etc.)

In case of installing multiple units in lateral connection per row.

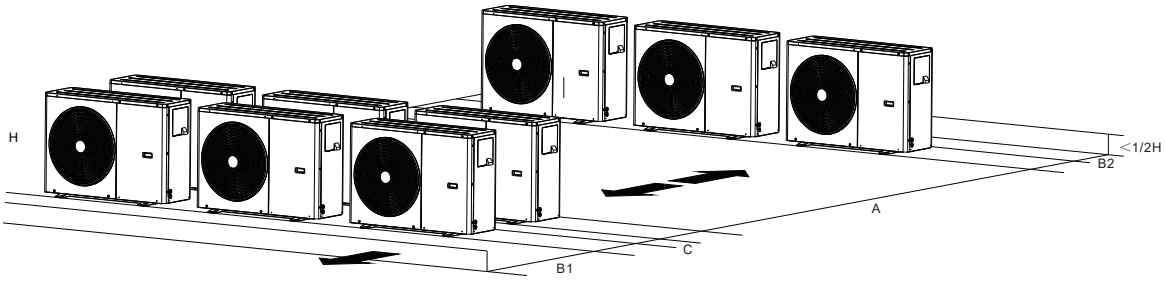

Unit	A(mm)	B1(mm)	B2(mm)	C(mm)
4~12kW	≥2500	≥1000	≥300	≥600
14~16kW	≥3000	≥1500		

8 TYPICAL APPLICATIONS

The application examples given below are for illustration only.

8.1 Application 1

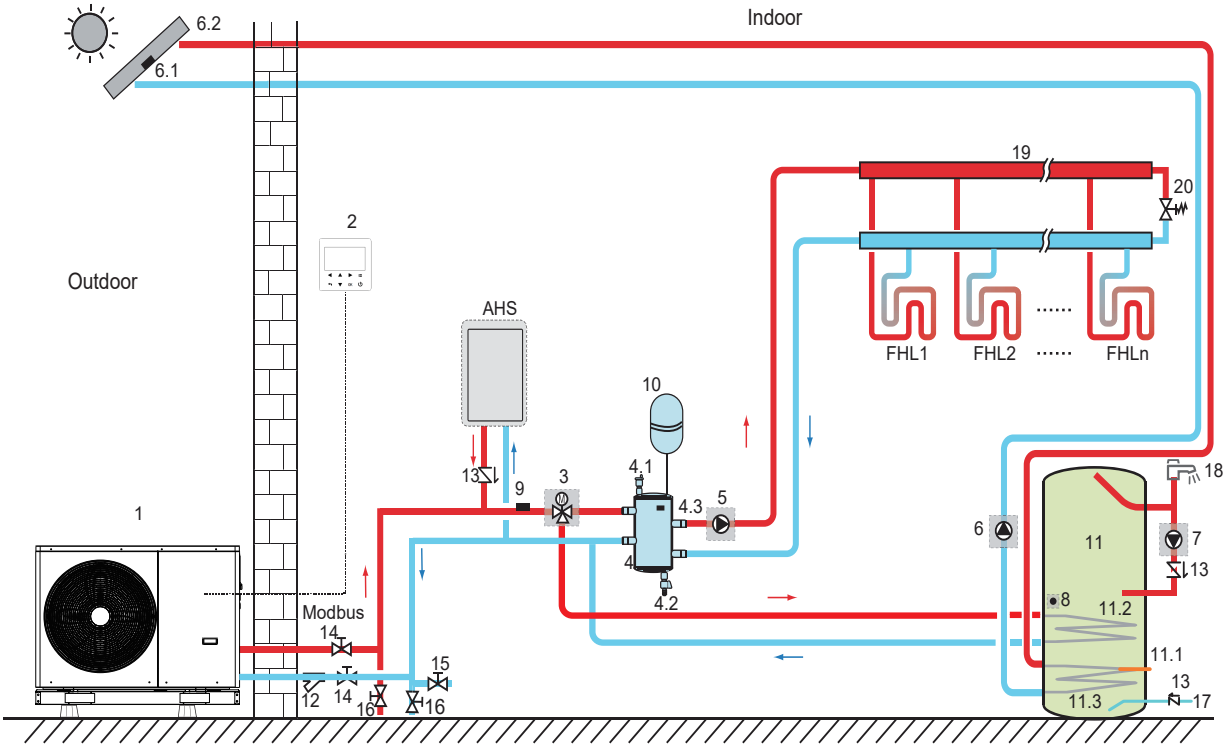

Code	Assembly unit	Code	Assembly unit
1	Main unit	11	Domestic hot water tank (Field supply)
2	User interface	11.1	TBH: Domestic hot water tank booster heater (Field supply)
3	SV1:3-way valve (Field supply)	11.2	Coil 1, heat exchanger for heat pump
4	Balance tank (Field supply)	11.3	Coil 2, heat exchanger for Solar energy
4.1	Automatic air purge valve	12	Filter (Accessory)
4.2	Drainage valve	13	Check valve (Field supply)
4.3	TE1: Balance tank upper temperature sensor (optional reserved)	14	Shut-off valve (Field supply)
5	P_o: Outside circulation pump(Field supply)	15	Filling valve (Field supply)
6	P_s: Solar pump (Field supply)	16	Drainage valve (Field supply)
6.1	Tsolar: Solar temperature sensor(optional)	17	Tap water inlet pipe (Field supply))
6.2	Solar panel (Field supply)	18	Hot water tap (Field supply)
7	P_d: DHW pipe pump (Field supply)	19	Collector/distributor (Field supply)
8	TW: Domestic water tank temperature sensor (Accessory)	20	Bypass valve (Field supply)
		FHL 1…n	Floor heating loop (Field supply)
9	TC:Total water flow temperature sensor (Optional)	AHS	Auxiliary heat source (Field supply)
10	Expansion vessel (Field supply)		

- Space heating

The ON/OFF signal and operation mode and temperature setting are set on the user interface. P_o keeps running as long as the unit is ON for space heating, SV1 keeps OFF.

- Domestic water heating

The ON/OFF signal and target tank water temperature (TWS) are set on the user interface. P_o stops running as long as the unit is ON for domestic water heating, SV1 keeps ON.

- AHS (auxiliary heat source) control

The AHS function is set on the wired controller (See "wired controller manual")
1) When the AHS is set to be valid only for heating mode, AHS can be turned on in the following ways:
a. Turn on the AHS via BACKUPHEATER function on the user interface;
b. AHS will be turned on automatically if initial water temperature is too low or target water temperature is too high at low ambient temperature.
P_o keeps running as long as the AHS is ON, SV1 keeps OFF.
2) When the AHS is set to be valid for heating mode and DHW mode. In heating mode, AHS control is same as part 1); In DHW mode, AHS will be turned on automatically when the initial domestic water temperature TW is too low or the target domestic water temperature is too high at low ambient temperature. P_o stops running, SV1 keeps ON.

- TBH (tank booster heater) control

The TBH function is set on the user interface. (See"wired controller manual")
1） When the TBH is set to be valid, TBH can be turned on via BACKUPHEATER function on the user interface; In DHW mode, TBH will be turned on automatically when the initial domestic water temperature TW is too low or the target domestic water temperature is too high at low ambient temperature.

- Solar energy control

Hydraulic module recognizes solar energy signal by judging Tsolar or receiving SL1SL2 signal from user interface. The recognition method can be set via SOLAR INPUT on the user interface.Please refer to 9.7.6/1). For solar energy input signal" for wiring.
1)When Tsolar is set to be valid, Solar energy turns ON when Tsolar is high enough, P_s starts running; Solar energy turns OFF when Tsolar is low, P_s stops running.
2)When SL1SL2 control is set to be valid, Solar energy turns ON after receiving Solar kit signal from user interface, P_s starts running; Without solar kit signal. Solar energy turns OFF, P_s stops running.

⚠ CAUTION

The highest outlet water temperature may reach 70°C, please beware of burn.

NOTE

Make sure to fit the (SV1) 3-way valve correctly. For more details, please refer to 9.7.6 "Connection for other components.
At extremely low ambient temperature, the domestic hot water is exclusively heated by TBH, which assures that heat pump can be used for space heating with full capacity.

8.2 Application 2

ROOM THERMOSTAT Control for Space heating or cooling need to be set on the user interface. It can be set in three ways: MODE SET/ONE ZONE/TWO ZONE. The monobloc can be connected to a high voltage room thermostat and a low voltage room thermostat. Please refer to 9.7.6/5) “For room thermostat" for wiring. (see 10.5.7 "ROOM THERMOSTAT" for setting)

8.2.1 One zone control

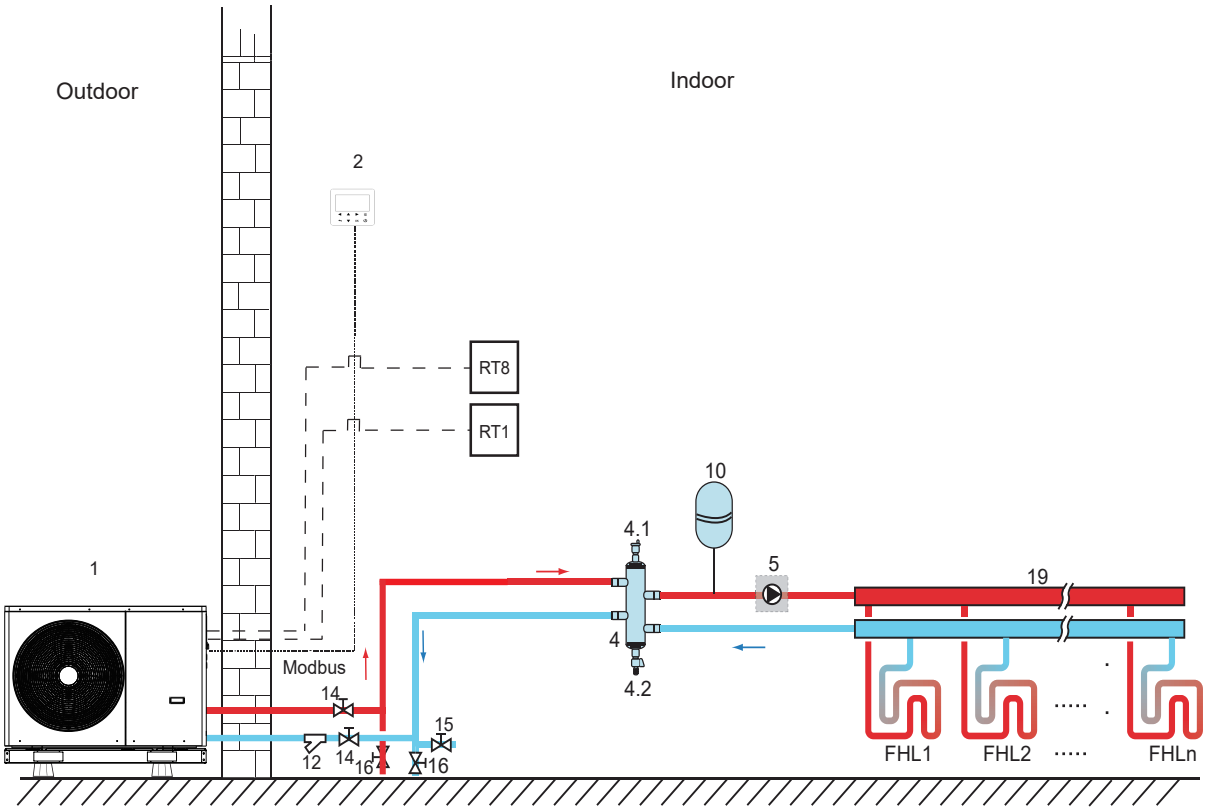

Code	Assembly unit	Code	Assembly unit
1	Main unit	14	Shut-off valve (Field supply)
2	User interface	15	Filling valve (Field supply)
4	Balance tank (Field supply)	16	Drainage valve (Field supply)
4.1	Automatic air purge valve	19	Collector/distributor (Field supply)
4.2	Drainage valve	RT 1	Low voltage room thermostat (Field supply)
5	P_o: Outside circulation pump (Field supply)	RT8	High voltage room thermostat (Field supply)
10	Expansion vessel (Field supply)	FHL 1...n	Floor heating loop (Field supply)
12	Filter (Accessory)		

- Space heating
  One zone control: the unit ON/OFF is controlled by the room thermostat, cooling or heating mode and outlet water temperature are set on the user interface. System is ON when any “HL” of all the thermostats closes. When all “HL” open, system turns OFF.

- The circulation pumps operation
  When the system is ON, which means any “HL” of all the thermostats closes, P_o starts running; When the system is OFF, which means all “HL” close, P_o stops running.

8.2.2 Mode set control

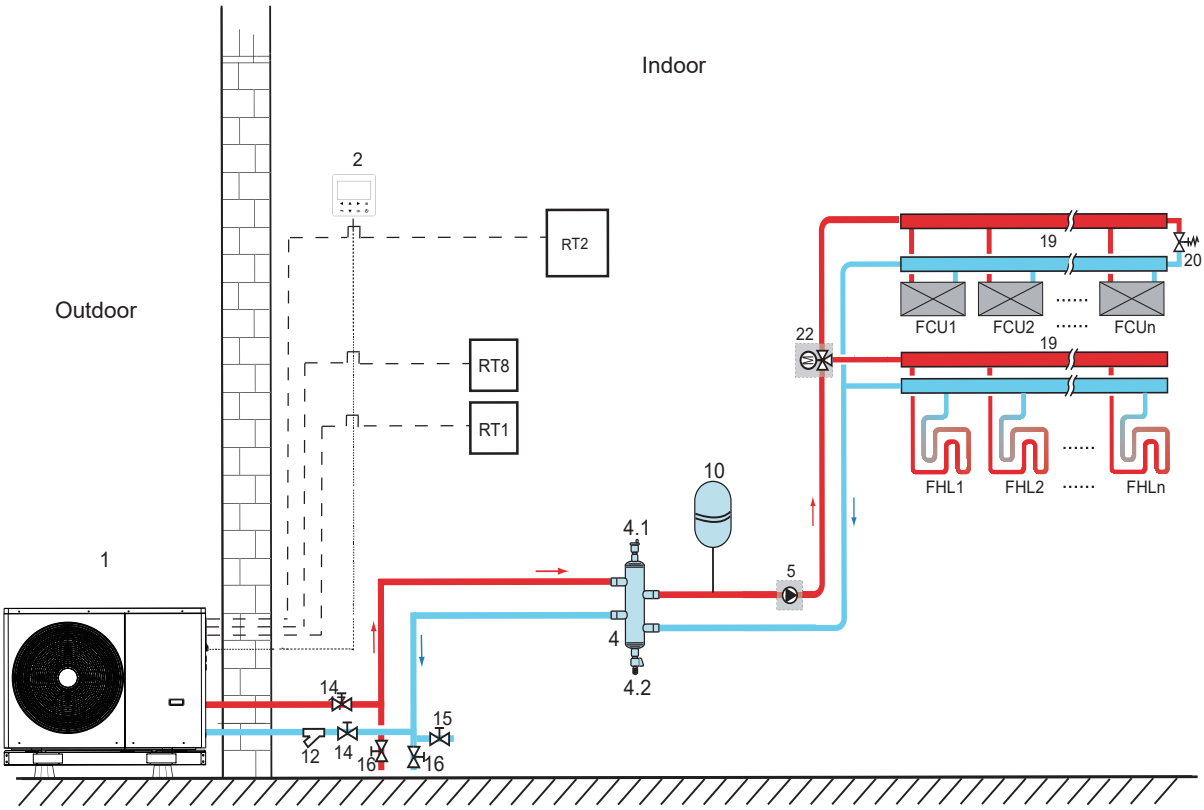

Code	Assembly unit	Code	Assembly unit
1	Main unit	16	Drainage valve (Field supply)
2	User interface	19	Collector/distributor
4	Balance tank (Field supply)	20	Bypass valve (Field supply)
4.1	Automatic air purge valve	22	SV2: 3-way valve (Field supply)
4.2	Drainage valve	RT 1/2	Low voltage room thermostat
5	P_o: Outside circulation pump (Field supply)	RT8	High voltage room thermostat
10	Expansion vessel (Field supply)	FHL 1…n	Floor heating loop (Field supply)
12	Filter (Accessory)	FCU 1...n	Fan coil unit (Field supply)
14	Shut-off valve (Field supply)		
15	Filling valve (Field supply)		

- Space heating

Cooling or heating mode is set via the room thermostat, water temperature is set on the user interface.
1) When any “CL” of all the thermostats close, system will be set at cooling mode.
2) When any “HL” of all the thermostats close and all “CL” open, system will be set at heating mode.

- The circulation pumps operation

1) When the system is in cooling mode, which means any “CL” of all the thermostats closes, SV2 keeps ON, P_o starts running.
2) When the system is in heating mode, which means one or more “HL” close and all “CL” open, SV2 keeps OFF, P_o starts running.

8.2.3 Double zone control

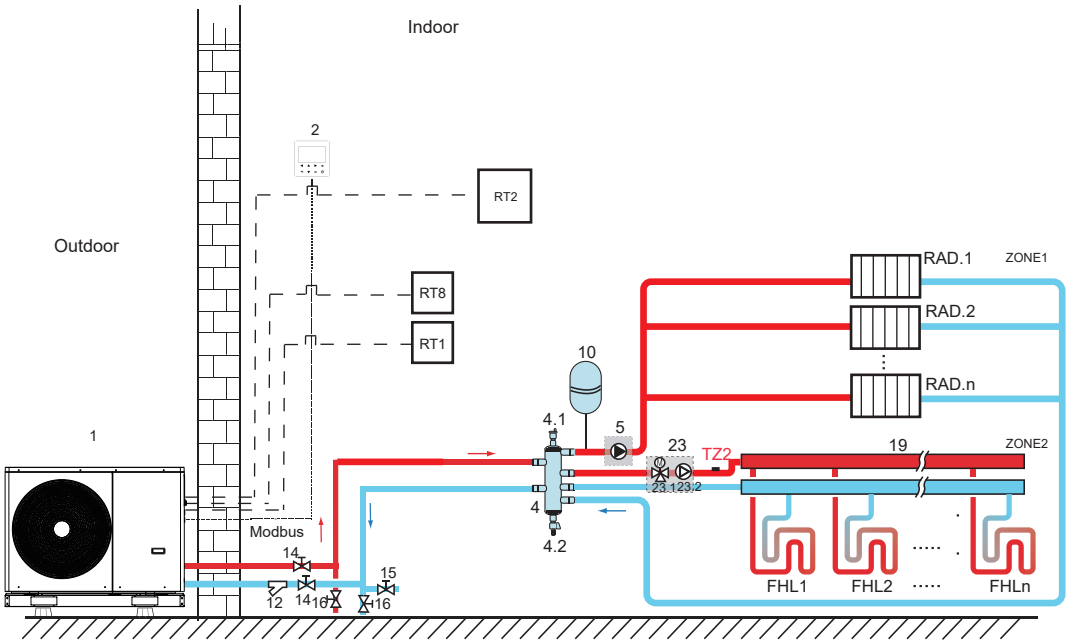

Code	Assembly unit	Code	Assembly unit
1	Main unit	19	Collector/distributor (Field supply)
2	User interface	21	Thermostat transfer board (Field supply)
4	Balance tank (Field supply)	23	Mixing station (Field supply)
4.1	Automatic air purge valve	23.1	SV3: Mixing valve (Field supply)
4.2	Drainage valve	23.2	P_c: zone 2 circulation pump (Field supply)
5	P_o: zone 1 circulation pump (Field supply)	RT 1/2	Low voltage room thermostat (Field supply)
10	Expansion vessel (Field supply)	RT8	High voltage room thermostat (Field supply)
12	Filter (Accessory)	TZ2	Zone 2 water flow temperature sensor (Field supply
14	Shut-off valve (Field supply)	FHL 1…n	Floor heating loop (Field supply)
15	Filling valve (Field supply)	RAD. 1...n	Radiator (Field supply)
16	Drainage valve (Field supply)		

- **Space heating**

  Zone1 can operate in cooling mode or heating mode, while zone2 can only operate in heating mode; While installation, for all thermostats in zone1, only “H、L” terminals need to be connected. For all thermostats in zone2, only “C、L” terminals need to be connected.

  1) The ON/OFF of zone1 is controlled by the room thermostats in zone1. When any “HL” of all thermostats in zone1 closes, zone1 turns ON. When all “HL” turn OFF, zone1 turns OFF; Target temperature and operation mode are set on the user interface.

  2) In heating mode, the ON/OFF of zone2 is controlled by the room thermostats in zone2. When any ”CL” of all thermostats in zone2 closes, zone2 turns ON. When all “CL” open, zone2 turns OFF. Target temperature is set on the user interface; Zone 2 can only operate in heating mode. When cooling mode is set on the user interface, zone2 keeps in OFF status.

- **The circulation pump operation**

  When zone 1 is ON, P_o starts running; When zone 1 is OFF, P_o stops running;
  When zone 2 is ON, SV3 switches between ON and OFF according to the set TZ 2 , P_C keeps ON; When zone 2 is OFF, SV3 is OFF, P_c stops running.
  The floor heating loops require a lower water temperature in heating mode compared to radiators or fan coil unit.To achieve these two set points, a mixing station is used to adapt the water temperature according to requirements of the floor heating loops. The radiators are directly connected to the unit water circuit and the floor heating loops are after the mixing station. The mixing station is controlled by the unit.

⚠ CAUTION

1) Make sure to connect the SV2/SV3 terminals in the wired controller correctly,please refer to 9.7.6/2) for 3-way valve SV1,SV2,SV3.

2) Thermostat wires to the correct terminals and to configure the ROOM THERMOSTAT in the wired controller correctly . Wiring of the room thermostat should follow method A/B/C as described in 9.7.6 "Connection for other components /5) For room thermostat".

NOTE

1) Zone 2 can only operate in heating mode. When cooling mode is set on user interface and zone 1 is OFF, “CL” in zone 2 closes, system still keeps “OFF”. While installation, the wiring of thermostats for zone 1 and zone 2 must be correct.
2) Drainage valve (2) must be installed at the lowest position of the piping system.

8.3 Balance tank volume requirement

NO.	model	Balance tank (L)
1	4~10 kW	⩾25
2	12~16 kW	⩾40

9 OVERVIEW OF THE UNIT

9.1 Disassembling the unit

Door 1 To access the compressor and electrical parts and hydraulic compartment

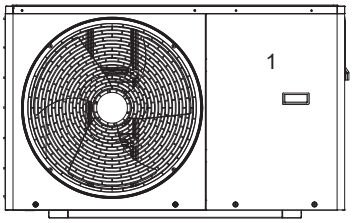

4/6/8 kW

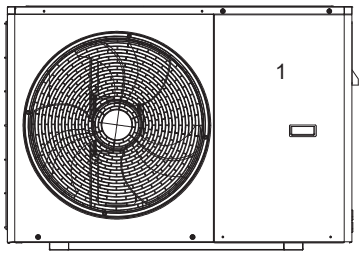

10/12 kW

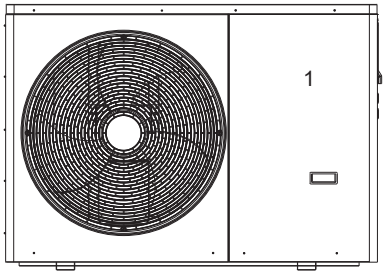

14/16 kW

⚠ WARNING

- Switch off all power — i.e. unit power supply and backup heater and domestic hot water tank power supply (if applicable) — before removing door 1
- Parts inside the unit may be hot.

9.2 Main components

9.2.1 Hydraulic module

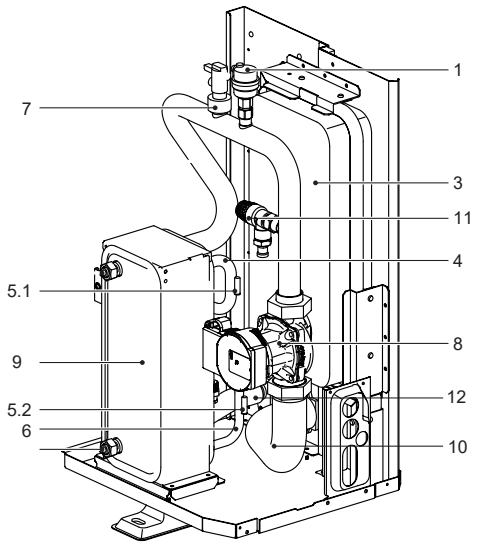

4/6 kW without backup heater

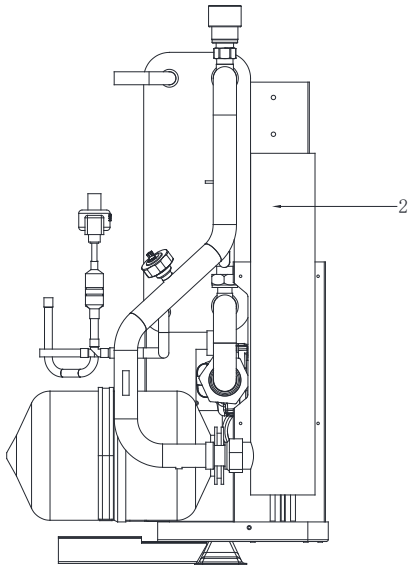

4/6 kW with backup heater(optional)

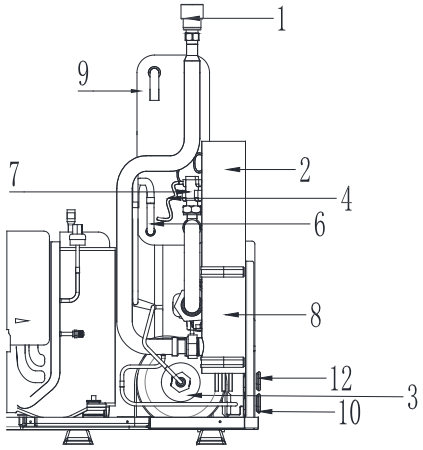

10~12 kW with backup heater(standard)

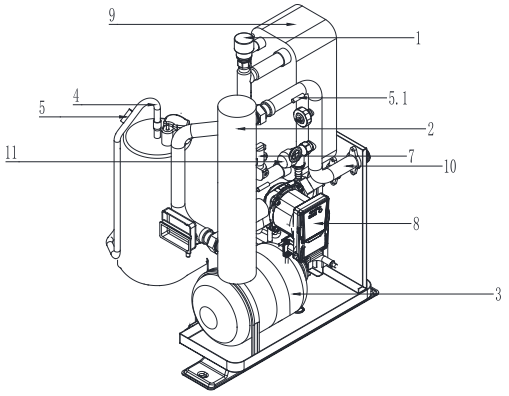

14~16 kW with backup heater(standard)

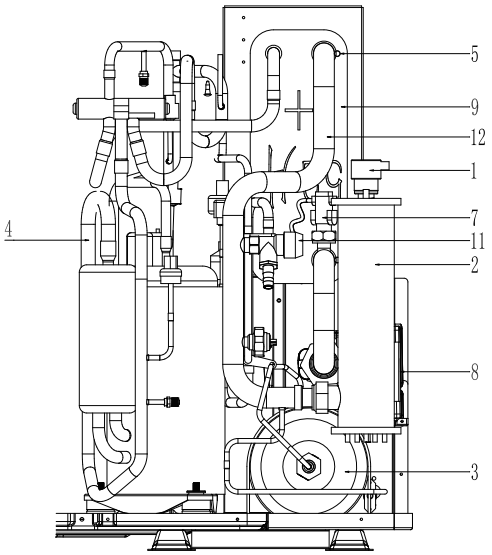

12 kW (3-Phase) with backup heater(standard)

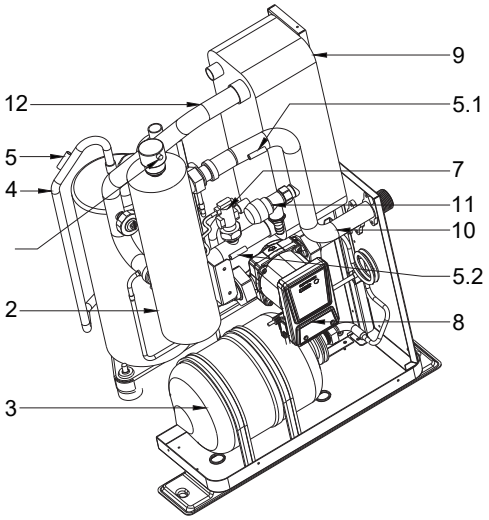

14~16 kW (3-Phase) with backup heater(standard)

Code	Assembly unit	Explanation
1	Automatic air purge valve	Remaining air in the water circuit will be automatically removed from the water circuit.
2	Backup heater(optional)	Provides additional heating capacity when the heating capacity of the heat pump is insufficient due to very low outdoor temperature. Also protects the external water pipes from freezing.
3	Expansion vessel	Balances water system pressure.
4	Refrigerant gas pipe	/
5	Temperature sensor	Three temperature sensors determine the water and refrigerant temperature at various points in the water circuit.
6	Refrigerant liquid pipe	/
7	Flow switch	Detects water flow rate to protect compressor and water pump in the event of insufficient water flow.
8	Pump	Circulates water in the water circuit.
9	Plate heat exchanger	Transfer heat from the refrigerant to the water.
10	Water outlet pipe	/
11	Pressure relief valve	Prevents excessive water pressure by opening at 3 bar and discharging water from the water circuit.
12	Water inlet pipe	/

9.3 Electronic control box

Note:The picture is for reference only, please refer to the actual product.

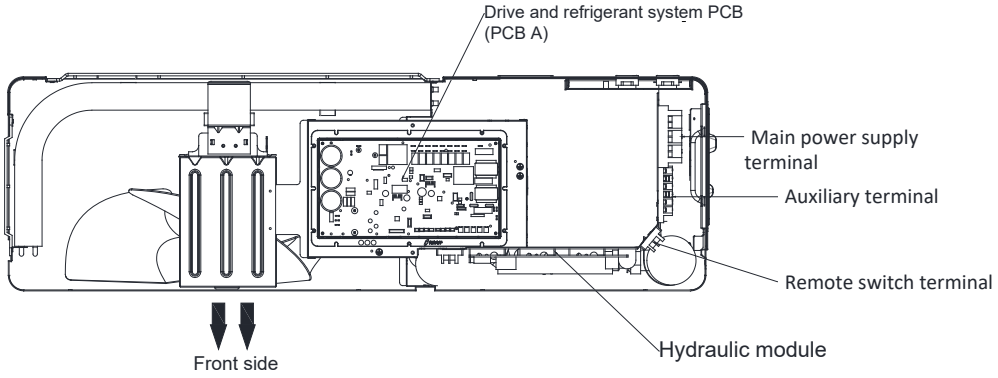

4-6kW(1-phase)

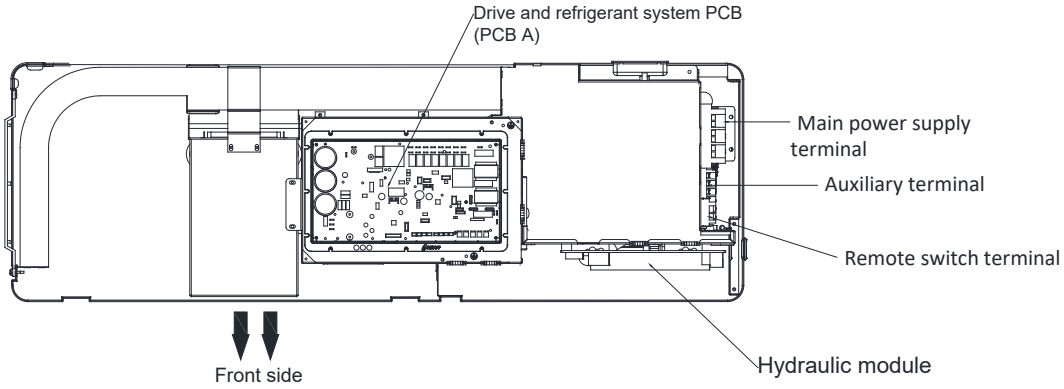

8-10-12kW(1-phase)

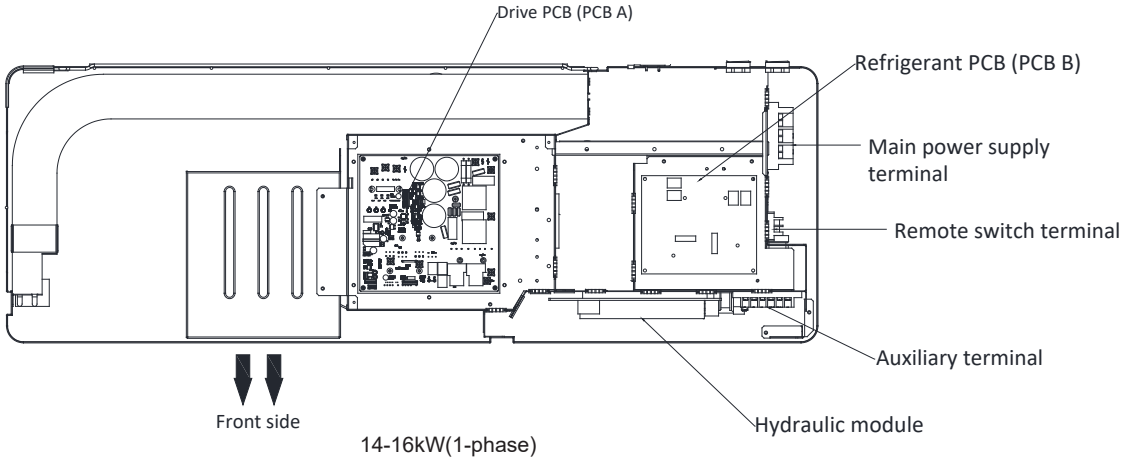

14-16kW(1-phase)

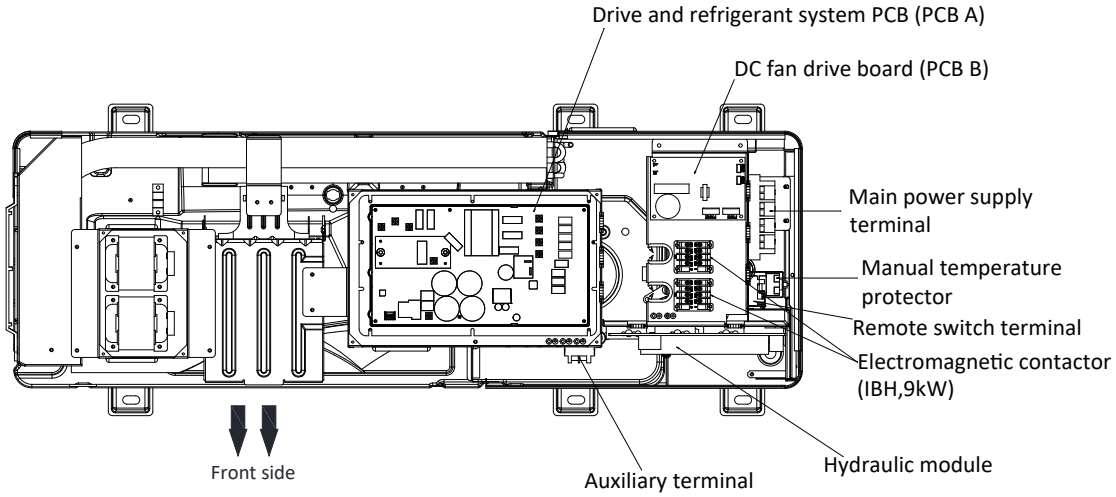

12kW(3-phase)

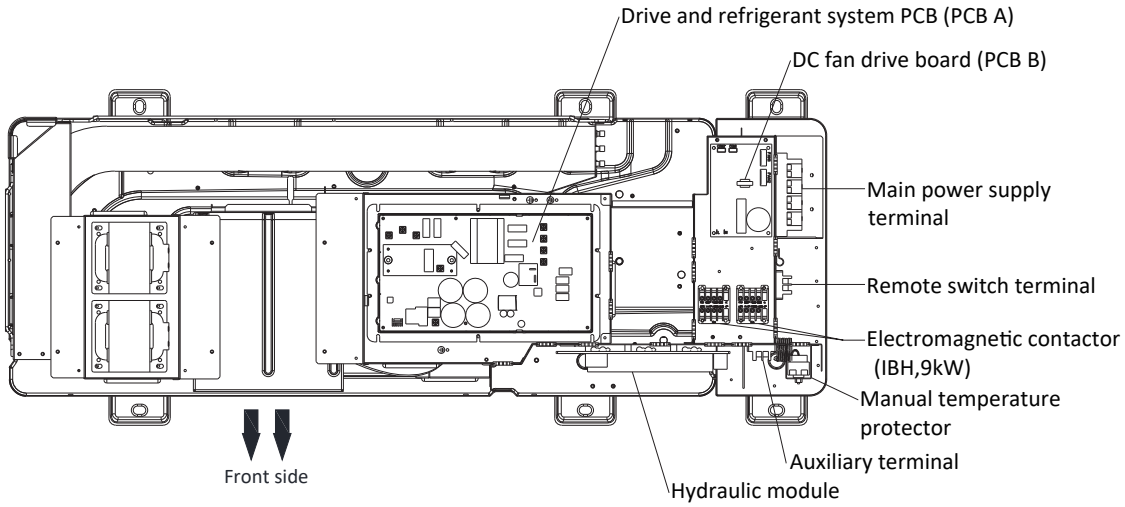

14-16kW(3-phase)

PCB specification

Model/Number	4kW/6kW	8kW/10kW	12kW	14kW/16kW	12/14kW/16kW (3-Phase)
Refrigerant system module	1	1	1	1	1
Inverter module				1	
DC Fan drive board					1
Hydraulic module PCB	1	1	1	1	1
Total	2	2	2	2	3

9.3.1 Main control board of hydraulic module

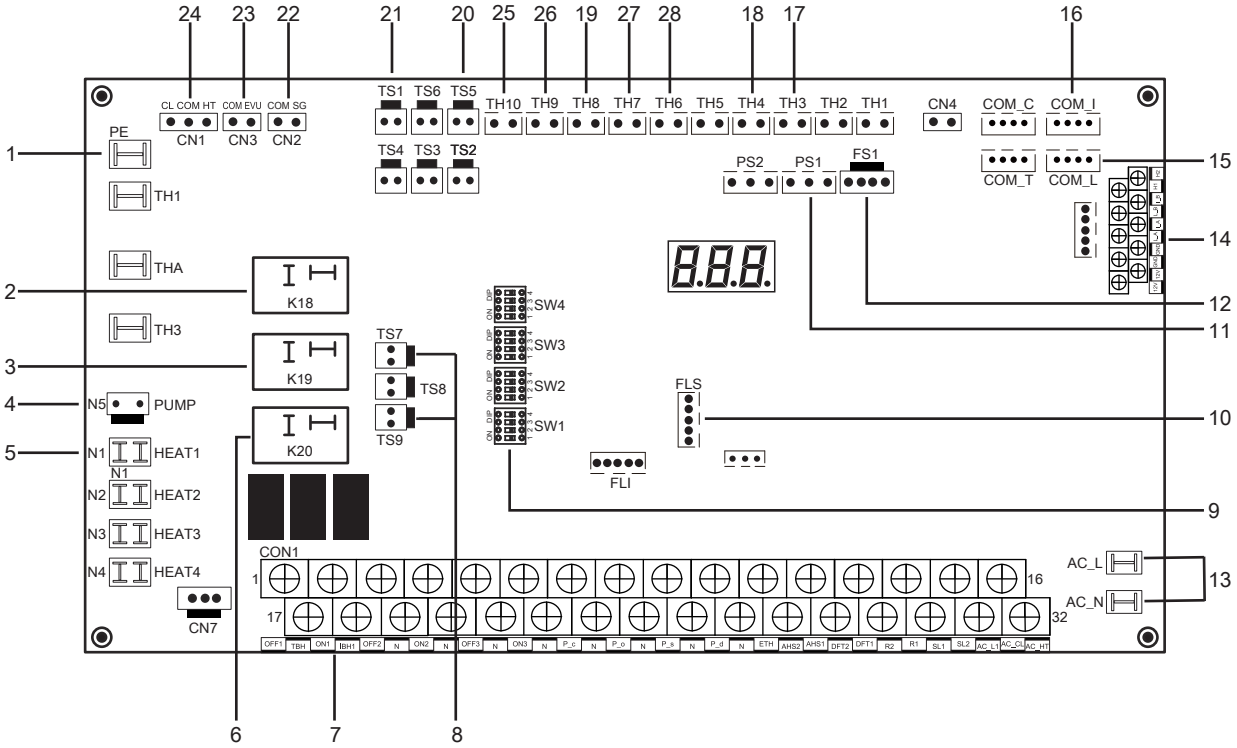

Items	Port label	function
1	PE	Port for ground
2	K18	Relay for internal backup heater(IBH,3 kW)
3	K19	Relay for domestic water tank heater(3kW)
4	Pump	Power supply of internal pump
5	HEAT 1	Plate heat exchange anti -freezing heater
6	K20	Relay (Reserved,3kW)
7	CON1	Terminals(Reserved)
8	TS7	High t emperature protection switch for IBH
9	SW1/2/3/4	Dip switch
10	FLS	Program update
11	PS1	Water pressure sensor
12	FS1	Internal pump speed feedback
13	AC	Power supply
14	U19	Communication ports
15	COM_L	Wired controller
16	COM_I	Communication port

Items	Port label	function
17	TH3	Inlet water temperature
18	TH4	Outlet water temperature
19	TH8	Domestic water tank temperature
20	TS5	Remote switch
21	TS1	Water flow switch
22	SG	Smart Grid
23	EVU	Commercial power
24	CN1	Low voltage thermostat
25	Tso	Solar temperature
26	TZ2	Zone 2 temperature
27	TE2	Reserved
28	TE1	Reserved

9.3.2 1-phase for 4-16kW units

1) PCB A, 4-6kW , Drive and refrigerant system PCB

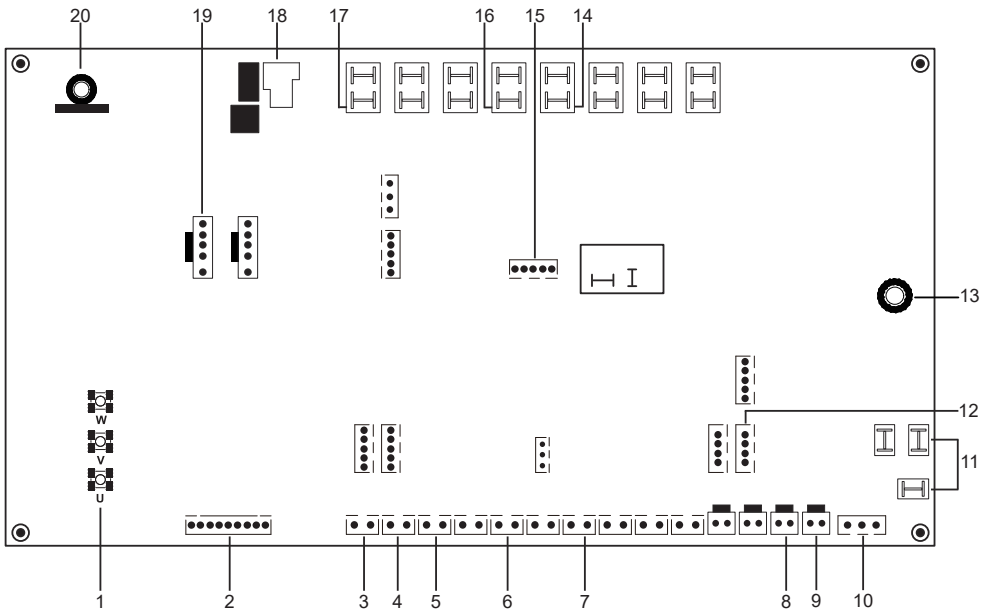

Items	Port label	function	Items	Port label	function
1	U/V/W	Compressor output	11	AC	Power supply
2	JTAG	Drive program update	12	COM4	Communication with hydraulic module PCB
3	TH1	Coil temperature sensor	13	PE1	Port for ground
4	TH2	Outdoor ambient temperature sensor	14	OUT4	Filter components
5	TH3	Refrigerant liquid temperature sensor	15	FLS	PCB Program update
6	TH5	Discharge temperature sensor	16	OUT5	Chassis heater
7	TH7	Suction temperature sensor	17	OUT8	Crankcase heater
8	TS3	HP2: Middle pressure switch	18	K9	Relay for PFC
9	TS4	HP1: High pressure switch	19	FAN1	DC Fan
10	TS5	LPS: low pressure sensor	20	/	Common mode inductance

2) PCB A， 8-10-12kW,Drive and refrigerant system PCB

Notification :8kw and 10-12kw models has different PCB A but same connect ports

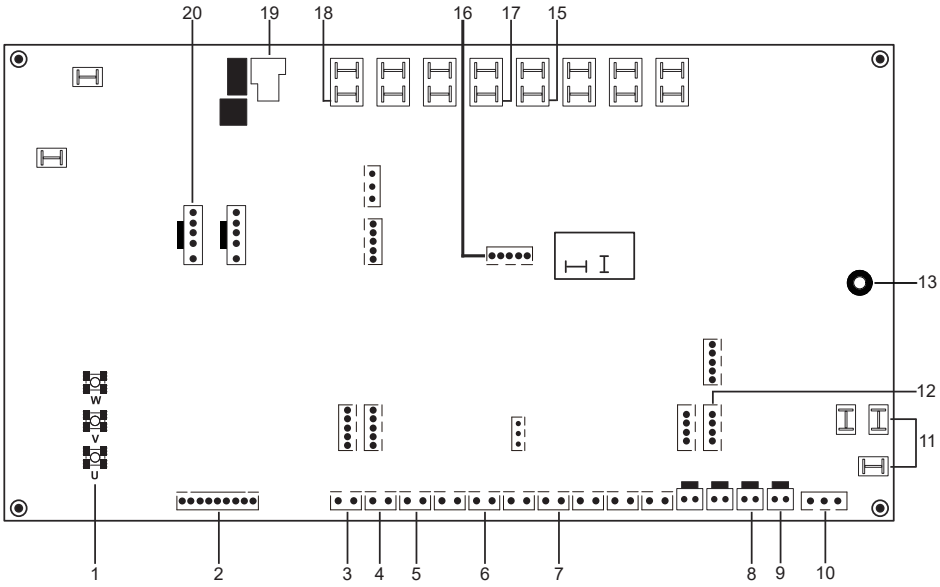

Items	Port label	function
1	U/V/W	Compressor output
2	JTAG	Drive program update
3	TH1	Coil temperature sensor
4	TH2	Outdoor ambient temperature sensor
5	TH3	Refrigerant liquid temperature sensor
6	TH5	Discharge temperature sensor
7	TH7	Suction temperature sensor
8	TS3	HP2: Middle pressure switch
9	TS4	HP1: High pressure switch
10	TS5	LPS: low pressure sensor
11	AC	Power supply
12	COM4	Communication with hydraulic module PCB
13	PE1	Port for ground
14	/	Filter components
15	OUT4	4- way valve
16	FLS	PCB Program update
17	OUT 5	Chassis heater
18	OUT 8	Crankcase heater
19	K9	Relay for PFC
20	FAN1	DC fan
21	/	Drive components

3) PCB A, 14-16kW,Drive PCB

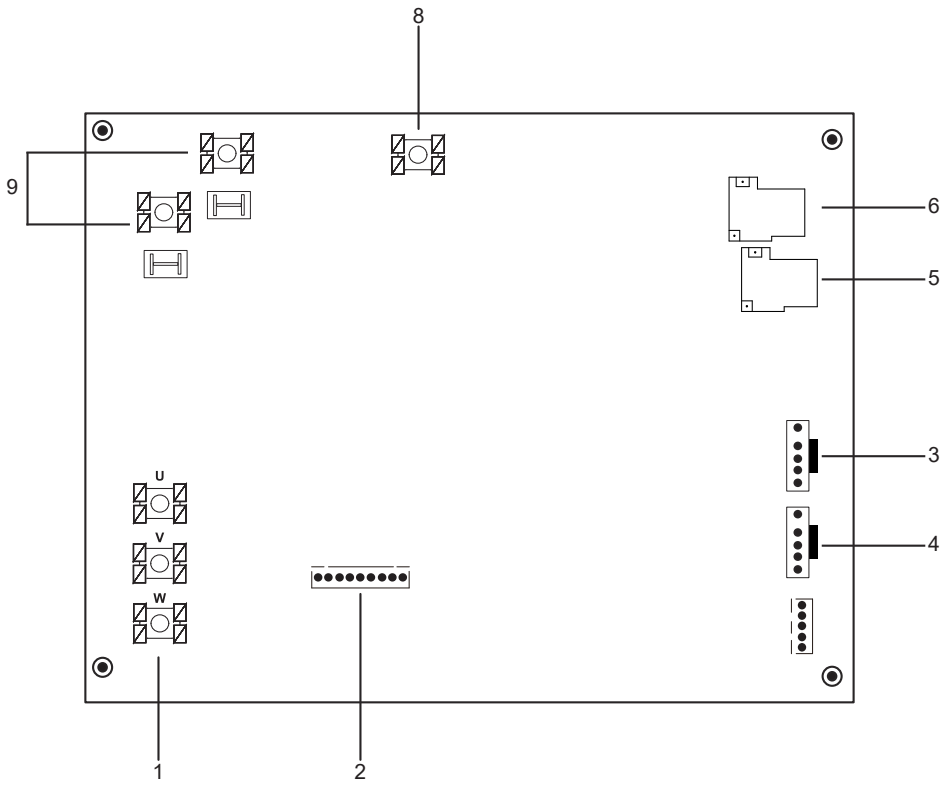

Items	Port label	function
1	U/V/W	Compressor output
2	JTAG	Drive program update
3	FAN1	DC fan
4	FAN2	Reserved
5	K2	Relay for PFC
6	K1	Relay for PFC
7	/	Filter components
8	PE	Port for ground
9	AC	Power supply
10	/	Drive components

4) PCB B, 14-16kW,Refrigerant system PCB

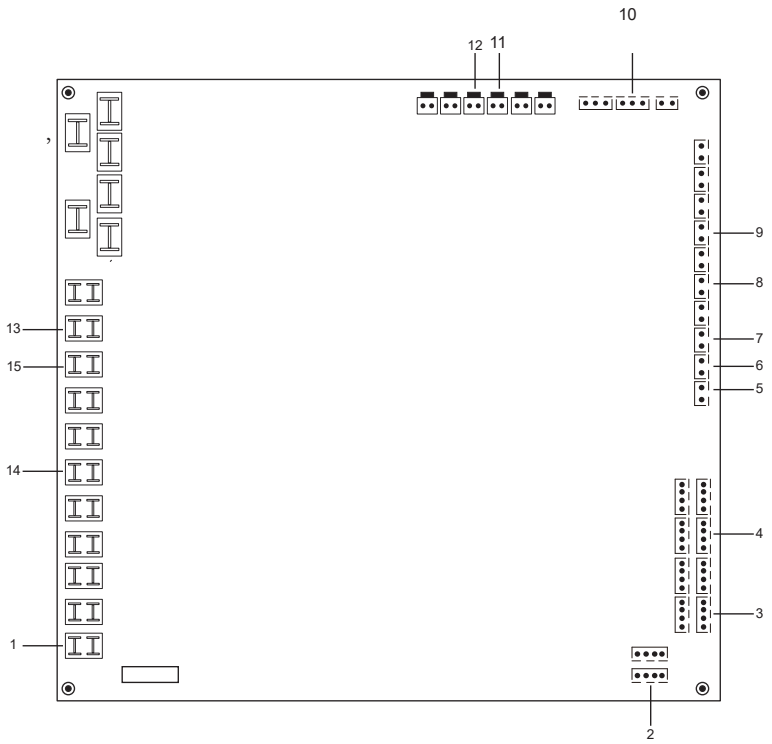

Items	Port label	function
1	AC (L/N)	Power supply
2	EXV1	Electric expansive valve
3	COM_L/I	Communication with hydraulic module PCB
4	COM_D	Communication with inverter module PCB
5	TH1	T3: Coil temperature sensor
6	TH2	T4: Outdoor ambient temperature sensor
7	TH3	T5: liquid temperature sensor
8	TH5	TP: Discharge temperature sensor
9	TH7	TH: Suction temperature sensor
10	TS8	LPS: Low pressure sensor
11	TS4	HP2: Middle pressure switch
12	TS3	HP1: High pressure switch
13	Output 4	Four-way valve
14	Output 8	Crankcase heater
15	Output 5	Chassis heater

9.3.3 3-phase for 12-16kW units

1) PCB A, 3-phase for 12-16kW, Drive and refrigerant system PCB

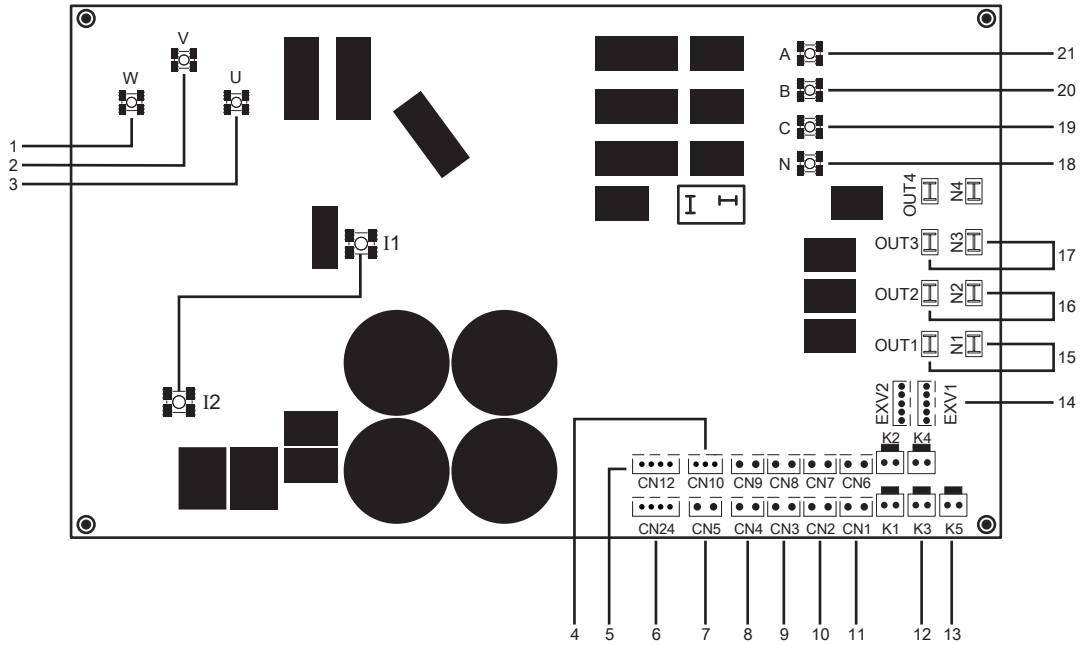

Items	Port label	Function	Items	Port label	Function
1	u	Compressor connection port	12	K3	Medium pressure switch
2	v		13	K5	High pressure switch
3	w		14	EXV1	Electronic expansion valve
4	CN10	Low pressure sensor	15	OUT1,N1	Four way valve
5	CN12	Communication between PCB A and PCB B	16	OUT2,N2	Chassis heater
6	CN24	Communication between PCB A and Main control board of hydraulic module	17	OUT3,N3	Crankcase heater
7	CN5	Suction temperature	18	N	Power supply
8	CN4	Discharge temperature	19	C	
9	CN3	EEV Liquid temperature	20	B	
10	CN2	Ambient temperature	21	A	
11	CN1	Coil temperature			

2) PCB B, 3-phase for 12-16kW, DC Fan drive board

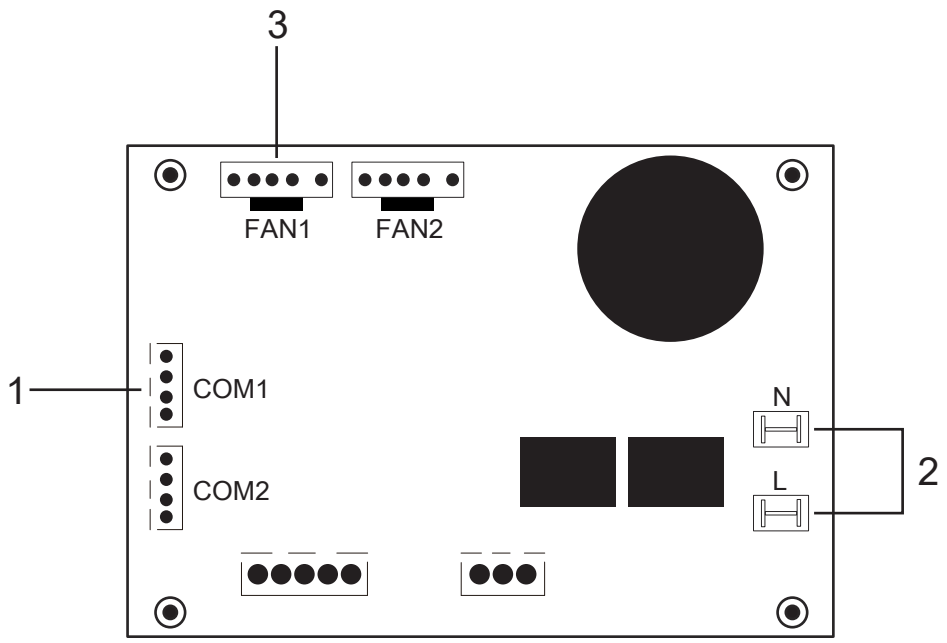

Items	Port label	Function
1	COM1	Communication between control PCB A and Fan control board
2	L, N	Power supply
3	FAN1	DC FAN

9.4 Water piping

All piping lengths and distances have been taken into consideration.

Requirements
The maximum allowed thermistor cable length is 20m. This is the maximum allowable distance between the domestic hot water tank and the unit (only for installations with a domestic hot water tank).The thermistor cable supplied with the domestic hot water tank is 10m in length.In order to optimize efficiency we recommend installing the 3-way valve and the domestic hot water tank as close as possible to the unit.

NOTE

If the installation is equipped with a domestic hot water tank (field supply), please refer to the domestic hot water tank Installation And Owner's Manual. If there is no glycol (anti-freeze) in the system there is a power supply or pump failure, drain the system (as shown in the figure below).

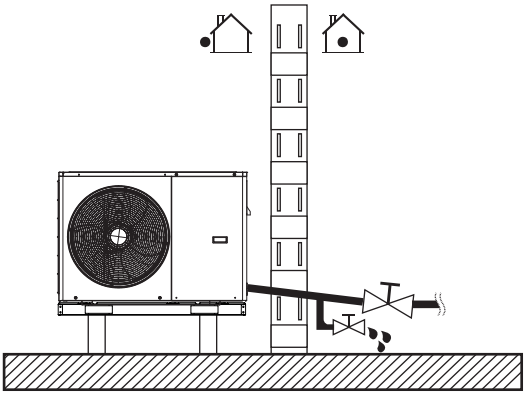

NOTE

If water is not removed from the system in freezing weather when unit is not used, the frozen water may damage the water circle parts.

9.4.1 Check the water circuit

The unit is equipped with a water inlet and water outlet for connection to a water circuit. This circuit must be provided by a licensed technician and must comply with local laws and regulations.
The unit is only to be used in a closed water system. Application in an open water circuit can lead to excessive corrosion of the water piping.

Example:

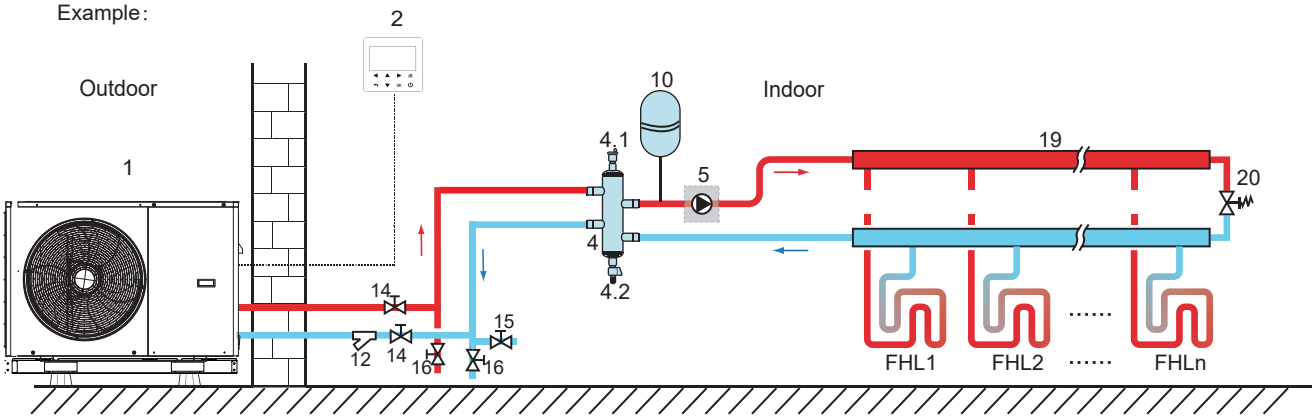

Code	Assembly unit	Code	Assembly unit
1	Main unit	12	Filter (Accessory)
2	User interface(accessory)	14	Shut-off valve (Field supply)
4	Balance tank (Field supply)	15	Filling valve (Field supply)
4.1	Automatic air purge valve	16	Drainage valve (Field supply)
4.2	Drainage valve	19	Collector/distributor (Field supply)
5	P_o: Outside circulation pump(Field supply)	20	Bypass valve (field supply)
10	Expansion vessel(field supply)	FHL 1…n	Floor heating loop (Field supply)

Before continuing installation of the unit, check the following:

- The maximum water pressure ≤ 3 bar.
- The maximum water temperature ≤ 70°C according to safety device setting.
- Always use materials that are compatible with the water used in the system and with the materials used in the unit.
- Ensure that components installed in the field piping can withstand the water pressure and temperature.
- Drain taps must be provided at all low points of the system to permit complete drainage of the circuit during maintenance.
- Air vents must be provided at all high points of the system. The vents should be located at points that are easily accessible for service. An automatic air purge valve is provided inside the unit. Check that this air purge valve is not tightened so that automatic release of air in the water circuit is possible.

9.4.2 Water volume and sizing expansion vessels

The units are equipped with an expansion vessel of 5L that has a default pre-pressure of 0.15 bar. To assure proper operation of the unit, the pre-pressure of the expansion vessel might need to be adjusted.

1) Check that the total water volume in the installation, excluding the internal water volume of the unit, is at least 40L. See 14 "Technical specifications" to find the total internal water volume of the unit.

NOTE

- In most applications this minimum water volume will be satisfactory.
- In critical processes or in rooms with a high heat load though, extra water might be required.
- When circulation in each space heating loop is controlled by remotely controlled valves, it is important that this minimum water volume is kept even if all the valves are closed.

2) Expansion vessel volume must fit the total water system volume.

3) To size the expansion for the heating and cooling circuit.

The expansion vessel volume can follow the figure below:

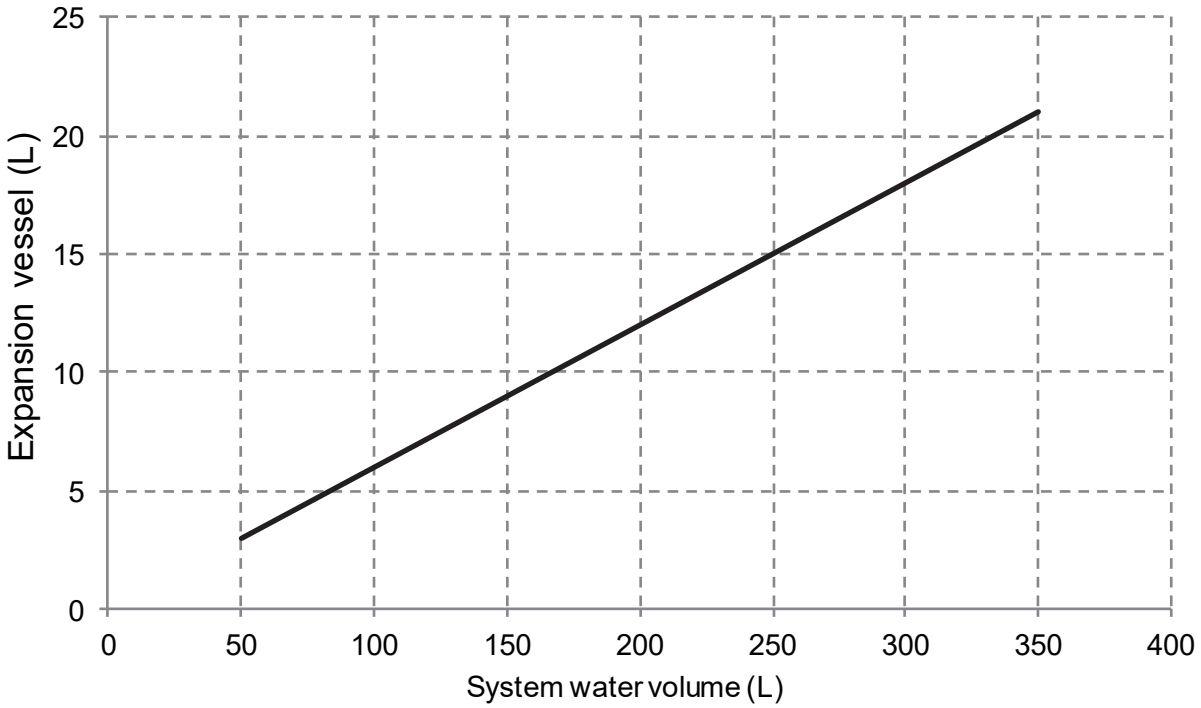

9.4.3 Water circuit connection

Water connections must be made correctly in accordance with labels on the outdoor unit, with respect to the water inlet and water outlet.

⚠ CAUTION

Be careful not to deform the unit's piping by using excessive force when connecting the piping. Deforming the piping can cause the unit to malfunction.

If air, moisture or dust gets in the water circuit, problems may occur. Therefore, always take into account the following when connecting the water circuit:

- Use clean pipes only.
- Hold the pipe end downwards when removing burrs.
- Cover the pipe end when inserting it through a wall to prevent dust and dirt entering.
- Use a good thread sealant for sealing the connections. The sealing must be able to withstand the pressures and temperatures of the system.
- When using non-copper metallic piping, be sure to insulate two kind of materials from each other to prevent galvanic corrosion.
- For copper is a soft material, use appropriate tools for connecting the water circuit. Inappropriate tools will cause damage to the pipes.

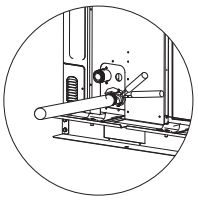

NOTE

The unit is only to be used in a closed water system. Application in an open water circuit can lead to excessive corrosion of the water piping:

- Never use Zn-coated parts in the water circuit. Excessive corrosion of these parts may occur as copper piping is used in the unit's internal water circuit.
- When using a 3-way valve in the water circuit. Preferably choose a ball type 3-way valve to guarantee full separation between the domestic hot water and floor heating water circuit.
- When using a 3-way valve or a 2-way valve in the water circuit. The recommended maximum changeover time of the valve should be less than 60 seconds.

9.4.4 Water circuit anti-freeze protection

All internal hydronic parts are insulated to reduce heat loss. Insulation must also be added to the field piping.

In event of a power failure, the above features would not protect the unit from freezing.

The software contains special functions using the heat pump and backup heater (if it is aviliable) to protect the entire system against freezing. When the temperature of the water flow in the system drops to a certain temperature, the unit will heat the water, either using the heat pump, the electric heating tap, or the backup heater. The freeze protection function will turn off only when the temperature increases to a certain valve.

Water may enter into the flow switch and cannot be drained out and may freeze when the temperature is low enough. The flow switch should be removed and dried, then can be reinstalled in the unit.

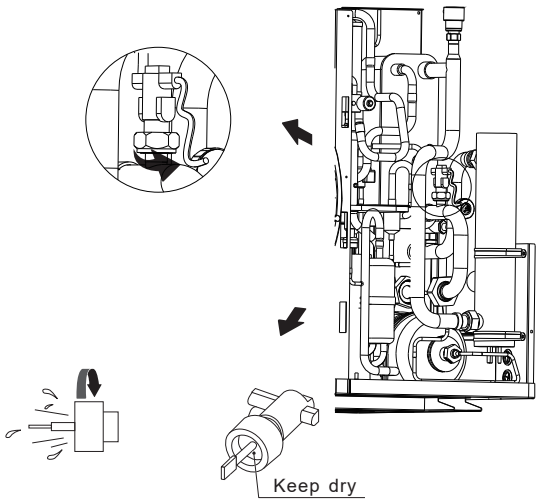

NOTE

Counterclock wise rotation, remove the flow switch.

Drying the flow switch completely.

⚠ CAUTION

When the unit is not running for a long time, make sure the unit is powered on all the time. If you want to cut off the power, the water in the system pipe needs to be drained clean, avoid the unit and pipeline system be damaged by freezing. Also the power of the unit needs to be cut off after water in the system is drained off.

.

⚠ WARNING

Ethylene Glycol and Propylene Glycol are TOXIC

9.5 Filling water

- Connect the water supply to the filling valve and open the valve.
- Make sure the automatic air purge valve is open (at least 2 turns).
- Fill with water pressure of approximately 2.0 bar. Remove air in the circuit as much as possible using the air purge valves. Air in the water circuit could lead to malfunction of the backup electric heater.

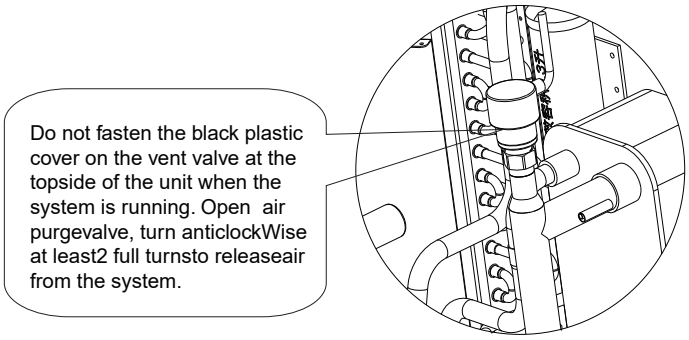

NOTE

During filling, it might not be possible to remove all air in the system. Remaining air will be removed through the automatic air purge valves during the first operating hours of the system. Topping up the water afterwards might be required.

- The water pressure will vary depending on the water temperature (higher pressure at higher water temperature). However, at all times water pressure should remain above 0.3 bar to avoid air entering the circuit.
- The unit might drain-off too much water through the pressure relief valve.
- Water quality should be complied with EN 98/83 EC Directives.
- Detailed water quality condition can be found in EN 98/83 EC Directives.

9.6 Water piping insulation

The complete water circuit including all piping, water piping must be insulated to prevent condensation during cooling operation and reduction of the heating and cooling capacity as well as prevention of freezing of the outside water piping during winter. The insulation material should at least of B1 fire resistance rating and complies with all applicable legislation. The thickness of the sealing materials must be at least 13 mm with thermal conductivity 0.039 W/mK in order to prevent freezing on the outside water piping.

If the outdoor ambient temperature is higher than 30°C and the humidity is higher than RH 80%, then the thickness of the sealing materials should be at least 20 mm in order to avoid condensation on the surface of the seal.

9.7 Field wiring

⚠ WARNING

A main switch or other means of disconnection, having a contact separation in all poles, must be incorporated in the fixed wiring in accordance with relevant local laws and regulations. Switch off the power supply before making any connections. Use only copper wires. Never squeeze bundled cables and make sure they do not come in contact with the piping and sharp edges. Make sure no external pressure is applied to the terminal connections. All field wiring and components must be installed by a licensed electrician and must comply with relevant local laws and regulations.

The field wiring must be carried out in accordance with the wiring diagram supplied with the unit and the instructions given below.

Be sure to use a dedicated power supply. Never use a power supply shared by another appliance.

Be sure to establish a ground. Do not ground the unit to a utility pipe, surge protector, or telephone ground. Incomplete grounding may cause electrical shock.

Be sure to install a ground fault circuit interrupter (30 mA). Failure to do so may cause electrical shock.

Be sure to install the required fuses or circuit breakers.

9.7.1 Precautions on electrical wiring work

- Fix cables so that cables do not make contact with the pipes (especially on the high pressure side).
- Secure the electrical wiring with cable ties as shown in figure so that it does not come in contact with the piping, particularly on the high-pressure side.
- Make sure no external pressure is applied to the terminal connectors.
- When installing the ground fault circuit interrupter make sure that it is compatible with the inverter (resistant to high frequency electrical noise) to avoid unnecessary opening of the ground fault circuit interrupter.

NOTE

The ground fault circuit interrupter must be a high- speed type breaker of 30 mA (<0.1 s).

- This unit is equipped with an inverter. Installing a phase advancing capacitor not only will reduce the power factor improvement effect, but also may cause abnormal heating of the capacitor due to high-frequency waves. Never install a phase advancing capacitor as it could lead to an accident.

9.7.2 Wiring overview

The illustration below gives an overview of the required field wiring between several parts of the installation.

NOTE

Please use H07RN-F for the power wire, all the cable are connect to high voltage except for thermistor cable and cable for user interface.

- Equipment must be grounded.
- All high-voltage external load, if it is metal or a grounded port, must be grounded.
- All external load current is needed less than 0.2A, if the single load current is greater than 0.2A, the load must be controlled through AC contactor.
- AHS1" "AHS2", "A1" "A2", wiring terminal ports provide only the switch signal.
  Please refer to image of 9.7.6 to get the ports position in the unit.

Figure 3-4.2.1: Wiring hole for 4/6/8kW models

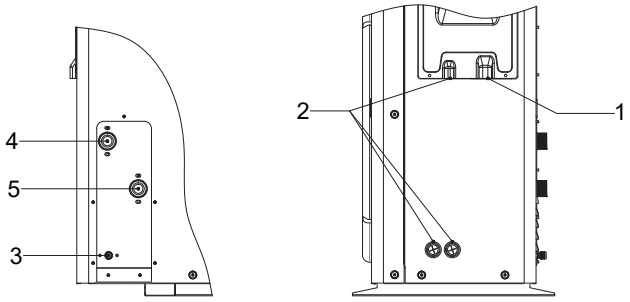

Figure 3-4.2.2: Wiring hole for 10/12kW models

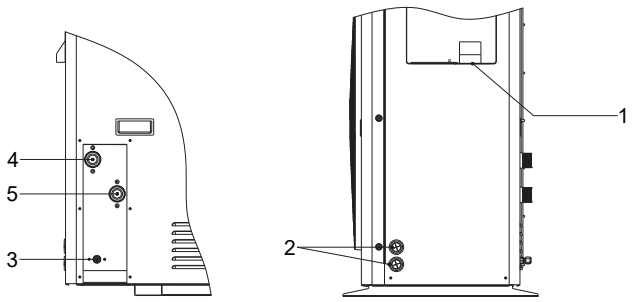

Figure 3-4.2.3: Wiring hole for 14/16kW models

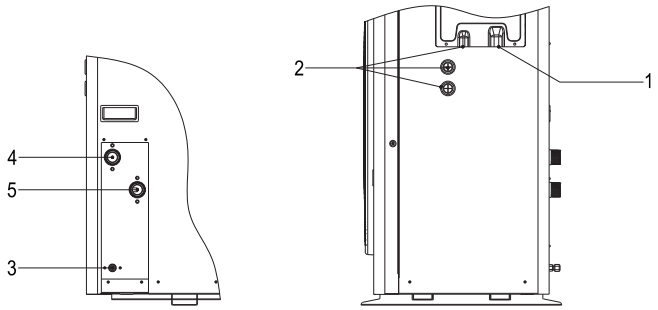

Code	Assembly unit
1	High voltage wire hole
2	Low voltage wire hole
3	Drainage pipe hole
4	Water outlet
5	Water inlet

Field wiring guidelines

- Most field wiring on the unit is to be made on the terminal block inside the switch box. To gain access to the terminal block, remove the switch box service panel (door 1).

⚠ WARNING

Switch off all power including the unit power supply and backup heater and domestic hot water tank power supply (if applicable) before removing the switch box service panel.

- Fix all cables using cable ties.
- A dedicated power circuit is required for the backup heater.
- Installations equipped with a domestic hot water tank (field supply) require a dedicated power circuit for the booster heater. Please refer to the domestic hot water tank Installation & Owner's Manual. Secure the wiring in the order shown below.
- Lay out the electrical wiring so that the front cover does not rise up when doing wiring work and attach the front cover securely.
- Follow the electric wiring diagram for electrical wiring works (the electric wiring diagrams are located on the rear side of door 2.
- Install the wires and fix the cover firmly so that the cover may be fit in properly.

9.7.3 Precautions on wiring of power supply

- Use a round crimp-style terminal for connection to the power supply terminal board. In case it cannot be used due to unavoidable reasons, be sure to observe the following instructions.

- Do not connect different gauge wires to the same power supply terminal. (Loose connections may cause overheating.)
- When connecting wires of the same gauge, connect them according to the figure below.

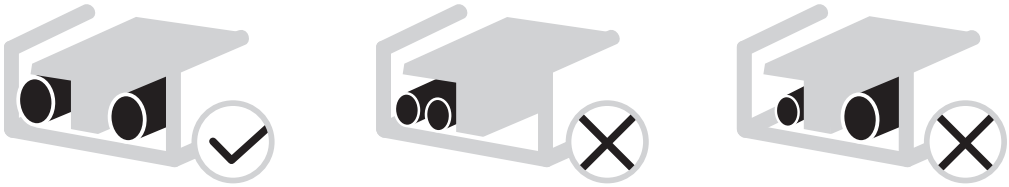

- Use the correct screwdriver to tighten the terminal screws. Small screwdrivers can damage the screw head and prevent appropriate tightening.
- Over-tightening the terminal screws can damage the screws.
- Attach a ground fault circuit interrupter and fuse to the power supply line.
- In wiring, make certain that prescribed wires are used, carry out complete connections, and fix the wires so that outside force cannot affect the terminals.

9.7.4 Safety device requirment

1. Select the wire diameters(minimum valve) individually for each unit based on the table 9-1 and table 9-2， where the rated current in table 9-1 means MCA in table 9-2. In case the MCA exceeds 63A, the wire diameters should be selected according to the national wiring regulation.
2. Maximum allowable voltage range variation between phases is 2%.
3. Select circuit breaker that having a contact separation in all poles not less than 3 mm providing full disconnection， where MFA is used to select the current circuit breakers and residual current operation breakers.

Table 9-1

1-phase 4-16kW standard and 3-phase 12-16kW standard

System	Outdoor Unit				Power Current			Compressor		OFM	
	Voltage (V)	Hz	Min. (V)	Max. (V)	MCA (A)	TOCA (A)	MFA (A)	MSC (A)	RLA (A)	KW	FLA (A)
4kW	220-240	50	198	264	12	18	25	-	11.50	0.10	0.50
6kW	220-240	50	198	264	14	18	25	-	13.50	0.10	0.50
8kW	220-240	50	198	264	16	19	25	-	14.50	0.17	1.50
10kW	220-240	50	198	264	19	23	25	-	15.50	0.17	1.50
12kW	220-240	50	198	264	26	30	35	-	23.50	0.17	1.50
16kW	220-240	50	198	264	27	30	35	-	25.50	0.17	1.50
12kW 3-PH	380-415	50	342	456	10	14	16	-	9.15	0.17	1.50
14kW 3-PH	380-415	50	342	456	11	14	16	-	10.15	0.17	1.50
16kW 3-PH	380-415	50	342	456	12	14	16	-	11.15	0.17	1.50

1-phase 4-16kW standard with backup heater 3kW

System	Outdoor Unit				Power Current			Compressor		OFM	
	Voltage (V)	Hz	Min. (V)	Max. (V)	MCA (A)	TOCA (A)	MFA (A)	MSC (A)	RLA (A)	KW	FLA (A)
4kW	220-240	50	198	264	25	31	38	-	11.50	0.10	0.50
6kW	220-240	50	198	264	27	31	38	-	13.50	0.10	0.50
8kW	220-240	50	198	264	29	32	38	-	14.50	0.17	1.50
10kW	220-240	50	198	264	32	36	38	-	15.50	0.17	1.50
12kW	220-240	50	198	264	39	43	48	-	23.50	0.17	1.50
16kW	220-240	50	198	264	40	43	48	-	25.50	0.17	1.50

3-phase 12-16kW standard with backup heater 9kW

System	Outdoor Unit				Power Current			Compressor		OFM	
	Voltage (V)	Hz	Min. (V)	Max. (V)	MCA (A)	TOCA (A)	MFA (A)	MSC (A)	RLA (A)	KW	FLA (A)
12kW	380-415	50	342	456	24	28	30	-	9.15	0.17	1.50
14kW	380-415	50	342	456	25	28	30	-	10.15	0.17	1.50
16kW	380-415	50	342	456	26	28	30	-	11.15	0.17	1.50

NOTE

MCA : Max. Circuit Amps. (A)
TOCA : Total Over-current Amps. (A)
MFA : Max. Fuse Amps. (A)
MSC : Max. Starting Amps. (A)
RLA : In nominal cooling or heating test condition, the input Amps of compressor where MAX. Hz can operate Rated Load Amps. (A)
KW : Rated Motor Output
FLA : Full Load Amps. (A)

9.7.5 Remove the switch box cover

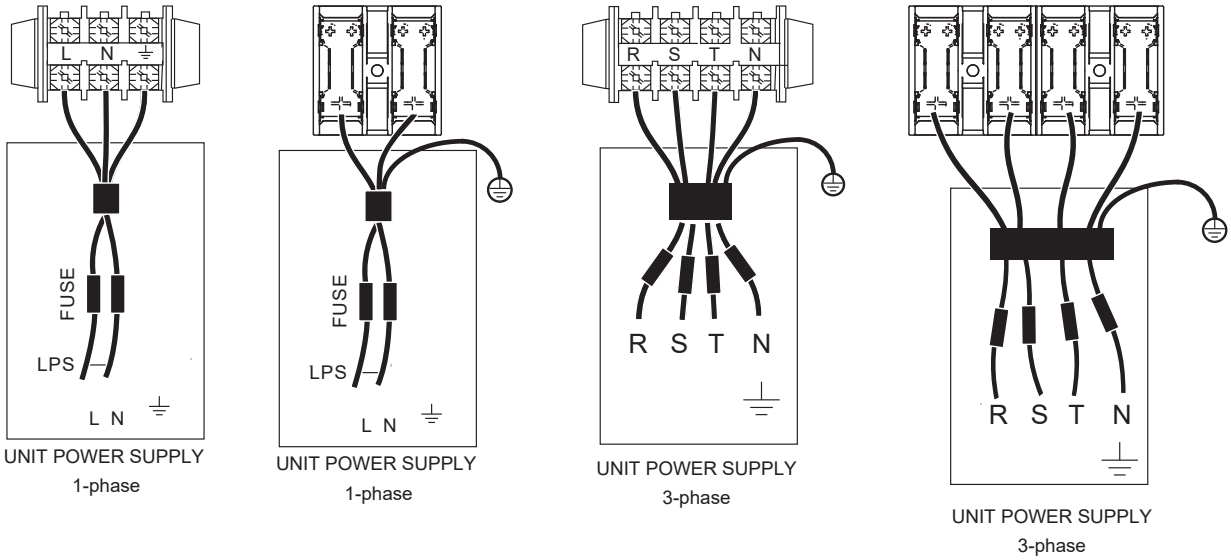

NOTE

The ground fault circuit interrupter must be 1 high-speed type of 30mA(<0.1s). Please use 3-core shielded wire.
The default of backup heater is option 3 (for 9kW backup heater).
Stated values are maximum values (see electrical data for exact values).

When connecting to the power supply terminal, use the circular wiring terminal with the insulation casing (see Figure 9.1).

Use power cord that conforms to the specifications and connect the power cord firmly. To prevent the cord from being pulled out by external force, make sure it is fixed securely.

If circular wiring terminal with the insulation casing cannot be used, please make sure that:

- Do not connect two power cords with different diameters to the same power supply terminal (may cause overheating of wires due to loose wiring) (See Figure 9.2).

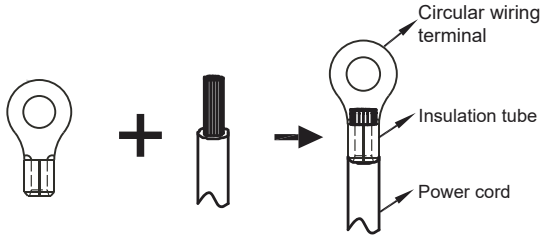

Figure 9.1

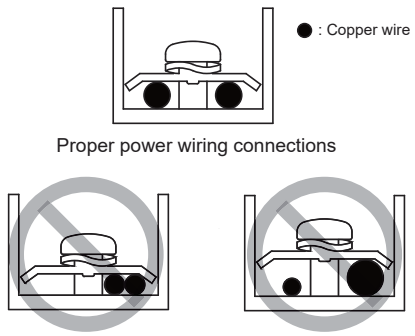

Figure 9.2

9.7.6 Connection for other components

unit 4-16kW

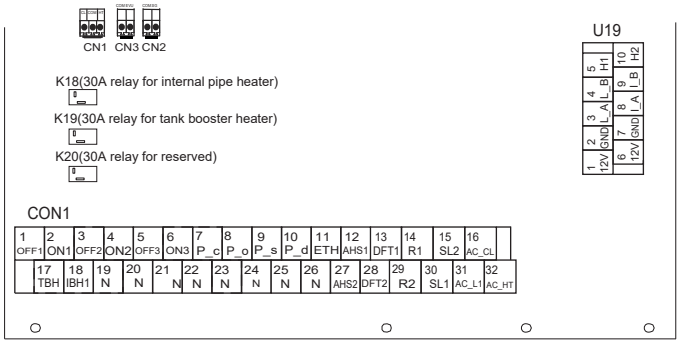

	Code	Print		Connect to
CON1	①	1	OFF1	SV1(3-way valve)
		2	ON1	
		19	N	
	②	3	OFF2	SV2(3-way valve)
		4	ON2	
		20	N	
	③	5	OFF3	SV3(3-way valve)
		6	ON3	
		21	N	
	④	7	P_c	Pumpc(zone2 pump)
		22	N	
	⑤	8	P_o	Outside circulation pump /zone1 pump
		23	N	
	⑥	9	P_s	Solar energy pump
		24	N	
	⑦	10	P_d	DHW pipe pump
		25	N	
	⑧	11	ETH	Reserved
		26	N	
	⑨	12	AHS1	Additional heat source
		27	AHS2	
	⑩	13	DFT1	Reserved
		28	DFT2	
	⑪	14	R1	Reserved
		29	R2	
	⑫	15	SL2	Solar energy input signal
		30	SL1	
	⑬	16	AC_CL	Room thermostat input （high voltage）
		31	AC_L1	
		32	AC_HT	

	Code	Print	Connect to
CN1	①	CL	Room thermostat input （Low voltage）
	②	COM	
	③	HT	
CN2	①	COM	SG
	②	SG	
CN3	①	COM	EVU
	②	EVU	

	Code	Print		Connect to
U19	①	1	12V	Wired controller
		2	GND	
		3	L_A	
		4	L_B	
	②	6	12V	To Outdoor unit
		7	GND	
		8	I_A	
		9	I_B	
	③	5	H1	RS485 PORT FOR MODBUS
		10	H2	

Port provide the control signal to the load.Two kind of control signal port:

Type 1：Dry connector without voltage.
Type 2：Port provide the signal with 220V voltage. If the current of load is <0.2A, load can connect to the port directly. If the current of load is >=0.2A, the AC contactor is required to connected for the load.

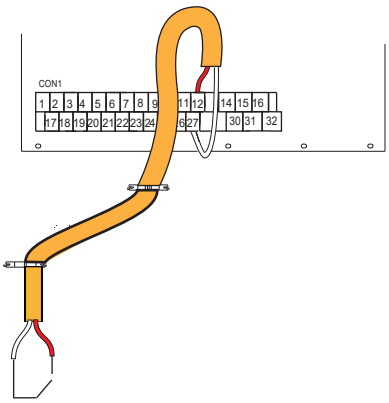

Type 1　For additional heat source control

1) For solar energy input signal:

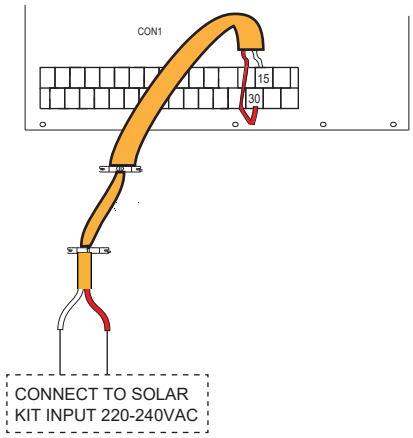

Voltage	220-240VAC
Maximum running current(A)	0.2
Wiring size(mm²)	0.75

2) For 3-way valve SV1、SV2 and SV3:

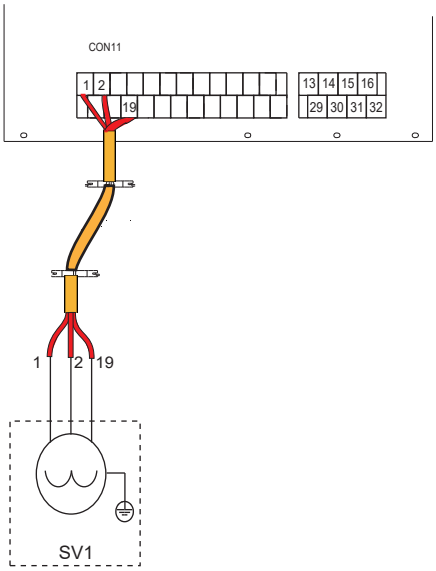

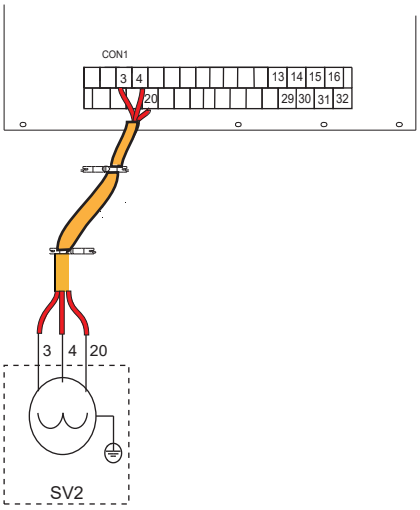

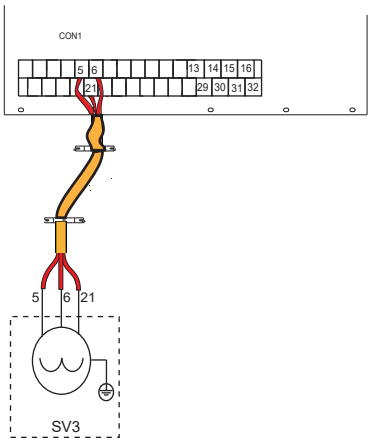

Voltage	220-240VAC
Maximum running current(A)	0.2
Wiring size(mm²)	0.75
Control port signal type	Type 2

a) Procedure

- Connect the cable to the appropriate terminals as shown in the picture.
- Fix the cable reliably.

3) For remote shut down:

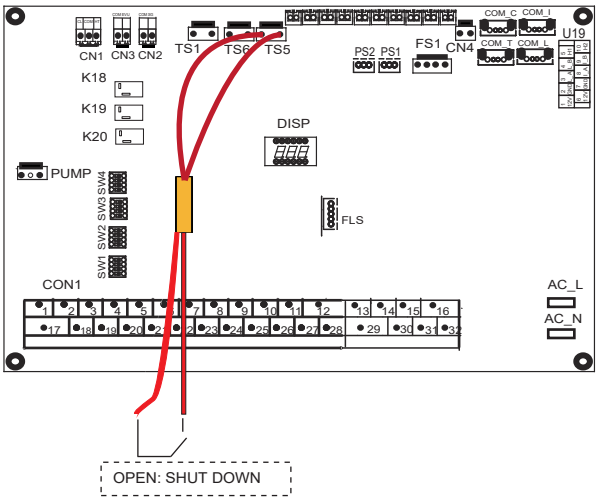

4) For Pumpc and DHW pipe pump:

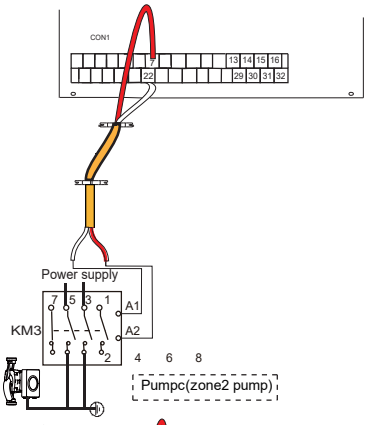

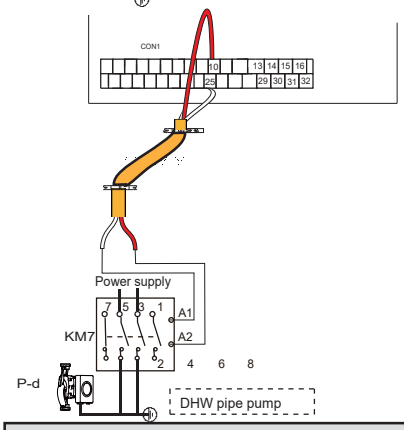

Voltage	220-240VAC
Maximum running current(A)	0.2
Wiring size(mm²)	0.75
Control port signal type	Type 2

a) Procedure

- Connect the cable to the appropriate terminals as shown in the picture.
- Fix the cable reliably.

5) For room thermostat:

Room thermostat type 1(High voltage): "POWER IN" provide the working voltage to the RT, doesn't provide the voltage to the RT connector directly. Port "31 L1" provide the 220V voltage to the RT connector. Port "31 L1" connect from the unit main power supply port L of 1- phase power supply.
Room thermostat type 2(Low voltage) : "POWER IN" provide the working voltage to the RT.

NOTE

There are two optional connect method depend on the room thermostat type.

Room thermostat type 1 (High voltage):

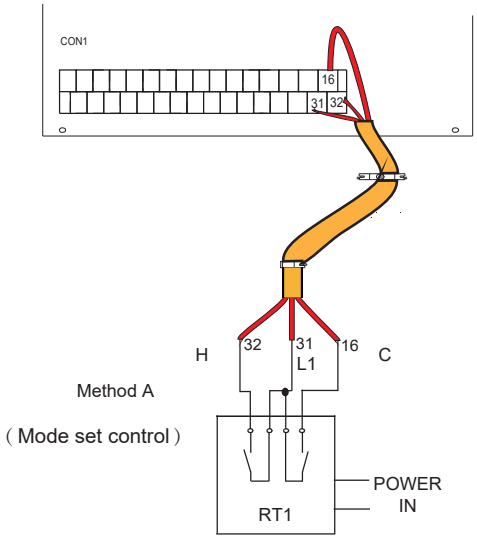

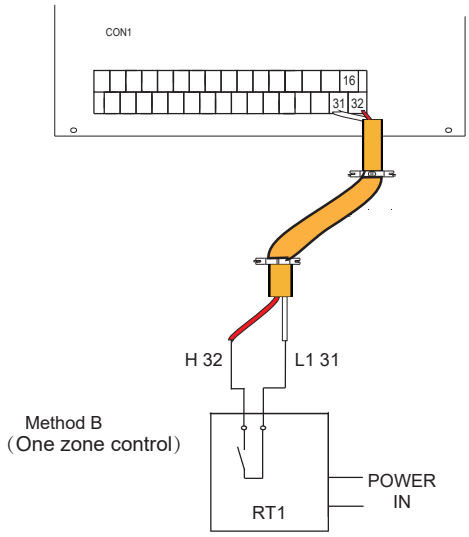

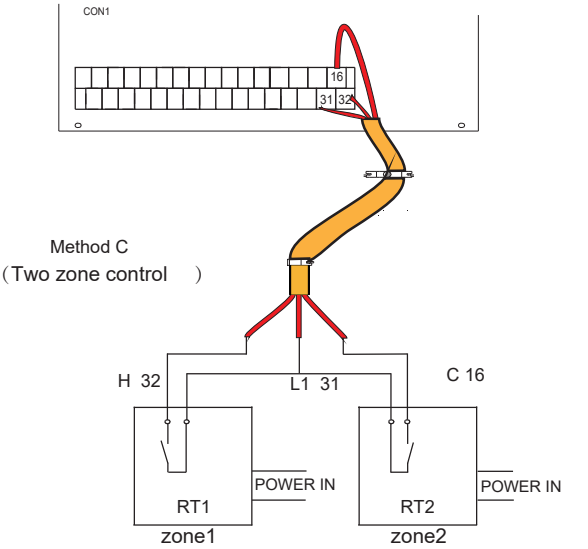

Voltage	220-240VAC
Maximum running current(A)	0.2
Wiring size(mm²)	0.75

There are three methods for connecting the thermostat cable (as described in the picture above) and it depends on the application.

- Method A (Mode set control)

RT can control heating and cooling individually, like the controller for 4-pipe FCU. When the hydraulic module is connected with the external temperature controller, user interface set ROOM THERMOSTAT to MODE SET:

A.1 When unit detect voltage is 230VAC between C and L1 ,the unit operates in the cooling mode.

A.2 When unit detect voltage is 230VAC between H and L1, the unit operates in the heating mode.

A.3 When unit detect voltage is 0VAC for both side(C-L1, H-L1) the unit stop working for space heating or cooling.

A.4 When unit detect voltage is 230VAC for both side(C-L1, H-L1) the unit working in cooling mode.

- Method B (One zone control)

RT provide the switch signal to unit. User interface set ROOM THERMOSTAT to ONE ZONE:

B.1 When unit detect voltage is 230VAC between H and L1, unit turns on.

B.2 When unit detect voltage is 0VAC between H and L1, unit turns off.

Method C（Two zone control　）

Hydraulic Module is connected with two room thermostat, while user interface set ROOM THERMOSTAT to TWO ZONES:

C.1 When unit detect voltage is 230VAC between H and L1 ,zone1 turns on. When unit detect voltage is 0VAC between H and L1, zone1 turns off.

C.2 When unit detect voltage is 230VAC between C and L1, zone2 turns on according to climate temp curve. When unit detect voltage is 0V between C and L1, zone2 turns off.

C.3 When H-L1 and C-L1 are detected as 0VAC, unit turns off.

C.4 when H-L1 and C-L1 are detected as 230VAC, both zone1 and zone2 turn on.

Room thermostat type2 (Low voltage):

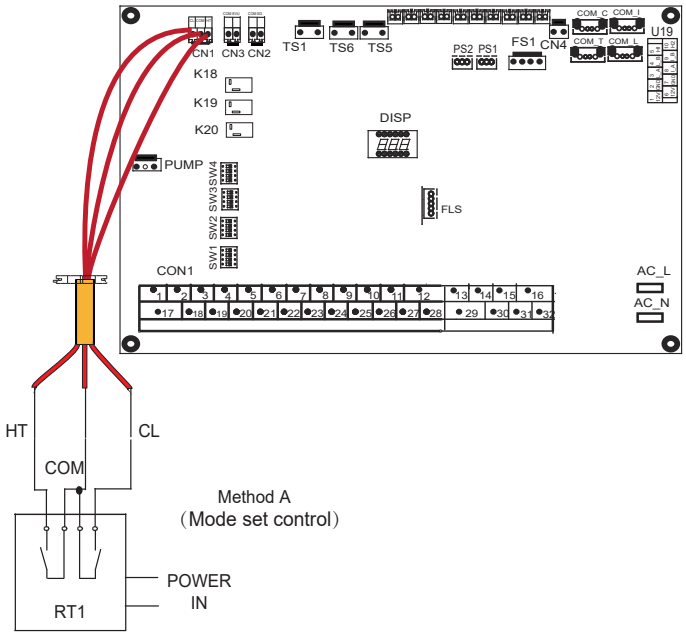

Method A
（Mode set control）

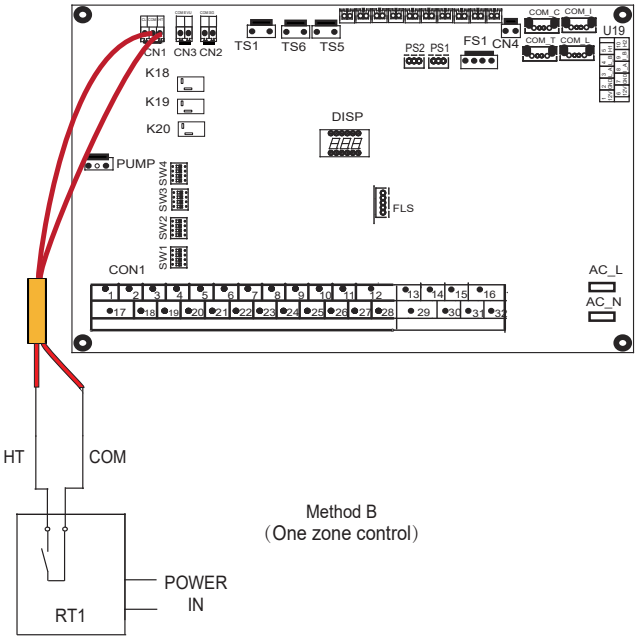

Method B
（One zone control）

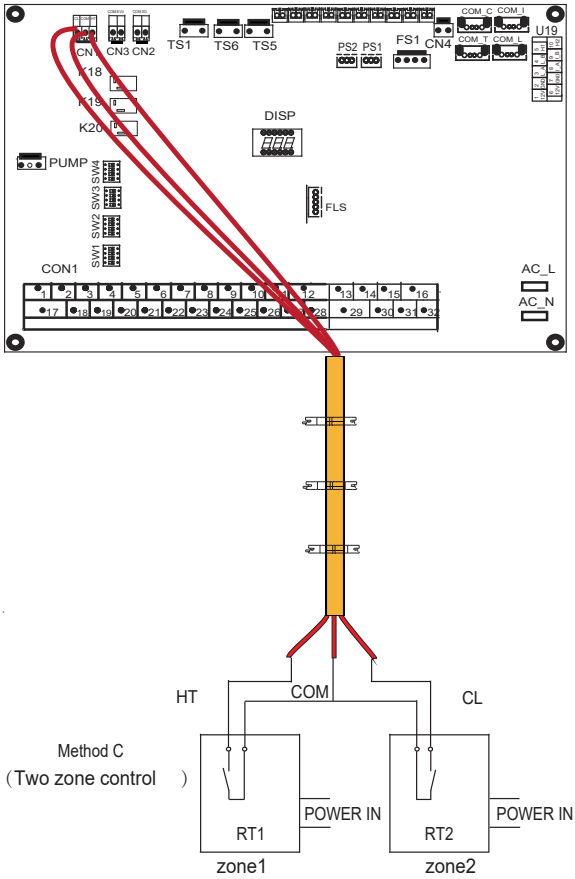

Method C
（Two zone control　）

There are three methods for connecting the thermostat cable (as described in the picture above) and it depends on the application.

- Method A（Mode set control）

RT can control heating and cooling individually, like the controller for 4-pipe FCU. When the hydraulic module is connected with the external temperature controller, user interface set ROOM THERMOSTAT to MODE SET：

A.1 When unit detect voltage is 12VDC between CL and COM ,the unit operates in the cooling mode.

A.2 When unit detect voltage is 12VDC between HT and COM, the unit operates in the heating mode.

A.3 When unit detect voltage is 0VDC for both side(CL-COM, HT-COM) the unit stop working for space heating or cooling.

A.4 When unit detect voltage is 12VDC for both side(CL-COM, HT-COM) the unit working in cooling mode.

- Method B（One zone control）

RT provide the switch signal to unit. User interface set ROOM THERMOSTAT to ONE ZONE：

B.1 When unit detect voltage is 12VDC between HT and COM, unit turns on.

B.2 When unit detect voltage is 0VDC between HT and COM, unit turns off.

- Method C（Two zone control　）

Hydraulic Module is connected with two room thermostat, while user interface set ROOM THERMOSTAT to TWO ZONES:

C.1 When unit detect voltage is 12VDC between HT and COM ,zone1 turn on. When unit detect voltage is 0VDC between HT and COM, zone1 turn off.

C.2 When unit detect voltage is 12VDC between CL and COM, zone2 turn on according to climate temp curve. When unit detect voltage is 0V between CL and COM, zone2 turn off.

C.3 When HT-COM and CL-COM are detected as 0VDC, unit turn off.

C.4 when HT-COM and CL-COM are detected as 12VDC, both zone1 and zone2 turn on.

NOTE

The wiring of the thermostat should correspond to the settings of the user interface.

Power supply of machine and room thermostat must be connected to the same Neutral Line .

Zone 2 can only operate in heating mode, When cooling mode is set on user interface and zone1 is OFF,“CL” in zone2 closes, system still keeps 'OFF'. While installation, the wiring of thermostats for zone1 and zone2 must be correct.

5) For additional heat source control:

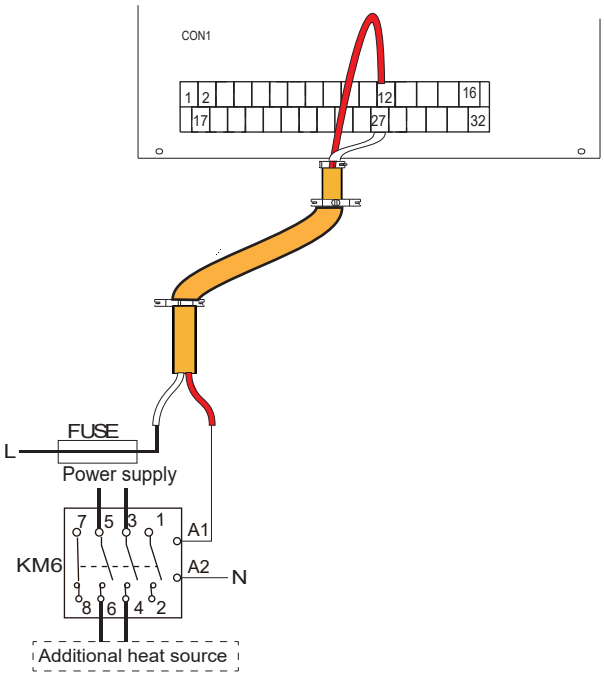

Voltage	220-240VAC
Maximum running current(A)	0.2
Wiring size(mm²)	0.75
Control port signal type	Type 2

⚠ WARNING

This part only applies to the unit without an interval backup heater. If there is an interval backup heater in the unit, the hydraulic module should not be connected to any additional heat source.

Voltage	220-240VAC
Maximum running current(A)	0.2
Wiring size(mm²)	0.75
Control port signal type	Type 1

6) For outside circulation pump P_o:

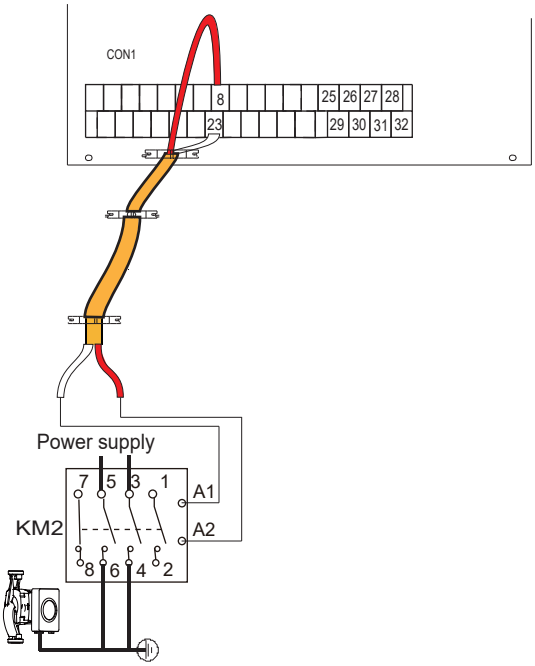

Voltage	220-240VAC
Maximum running current(A)	0.2
Wiring size(mm²)	0.75
Control port signal type	Type 2

a) Procedure

- Connect the cable to the appropriate terminals as shown in the picture.
- Fix the cable with cable ties to the cable tie mountings to ensure stress relief.

7) For smart grid:

The unit has smart grid function, there are two ports on PCB to connect SG signal and EVU signal as following:

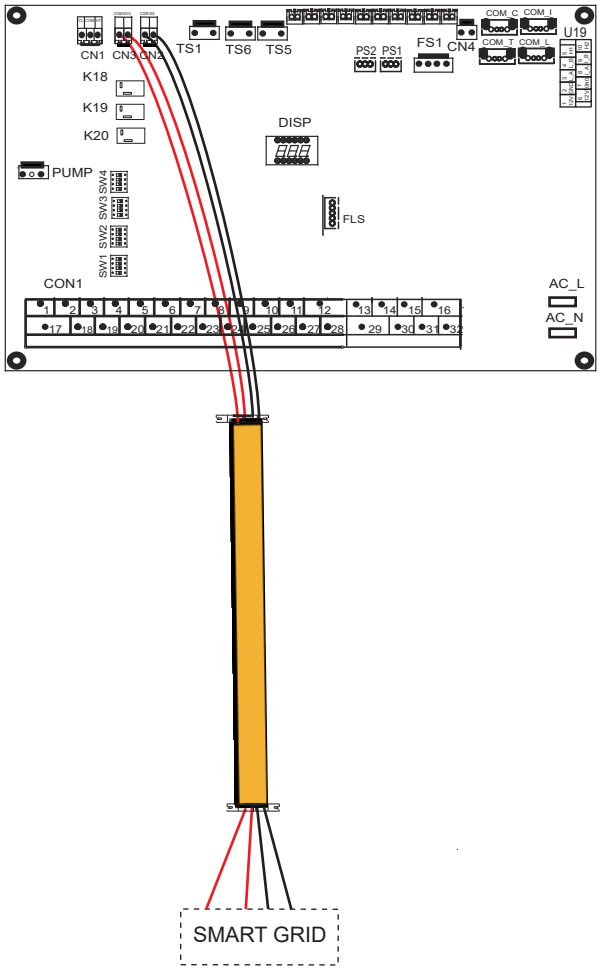

1. when EVU signal is on, the unit operate as below:

DHW mode turn on, the setting temperature will be changed to 70℃ automatically, and the WTH operate as below:TW<69℃, the WTH is on, TW ≥ 70℃, the WTH is off. The unit operate in cooling/heating mode as the normal logic.

2. When EVU signal is off, and SG signal is on, the unit operate normally.

3. When EVU signal is off, SG signal is off, the DHW mode is off, and the TBH is invalid, disinfect function is invalid. The max running time for cooling/heating is "SG RUNNIN TIME", then unit will be off.

10 START-UP AND CONFIGURATION

The unit should be configured by the installer to match the installation environment (outdoor climate, installed options, etc.) and user expertise.

⚠ CAUTION

It is important that all information in this chapter is read sequentially by the installer and that the system is configured as applicable.

10.1 DIP switch settings overview

10.1.1 Function setting

DIP switch SW1,SW2 SW3 and SW4 are located on the main control hydraulic module board (see "9.3.1 main control board of hydraulic module").

⚠ WARNING

Switch off the power supply before making any changes to the DIP switch settings.

Refer to eletrically controlled wiring diagram

10.2 Initial start-up at low outdoor ambient temperature

During initial start-up and when water temperature is low, it is important that the water is heated gradually. Failure to do so may result in concrete floors cracking due to rapid temperature change. Please contact the responsible cast concrete building contractor for further details.

10.3 Pre-operation checks

Checks before initial start-up.

⚠ DANGER

Switch off the power supply before making any connections.

After the installation of the unit, check the following before switching on the circuit breaker:

- Field wiring：Make sure that the field wiring between the local supply panel and unit and valves (when applicable), unit and room thermostat (when applicable), unit and domestic hot water tank, and unit and backup heater kit have been connected according to the instructions described in the chapter 9.7 "Field wiring", according to the wiring diagrams and to local laws and regulations.
- Fuses, circuit breakers, or protection devices Check that the fuses or the locally installed protection devices are of the size and type specified in 14 "Technical specifications". Make sure that no fuses or protection devices have been bypassed.
- Backup heater circuit breaker：Do not forget to turn on the backup heater circuit breaker in the switchbox (it depends on the backup heater type). Refer to the wiring diagram.
- Booster heater circuit breaker：Do not forget to turn on the booster heater circuit breaker (applies only to units with optional domestic hot water tank installed).
- Ground wiring：Make sure that the ground wires have been connected properly and that the ground terminals are tightened.
- Internal wiring：Visually check the switch box for loose connections or damaged electrical components.
- Mounting：Check that the unit is properly mounted, to avoid abnormal noises and vibrations when starting up the unit.
- Damaged equipment：Check the inside of the unit for damaged components or squeezed pipes.
- Refrigerant leak：Check the inside of the unit for refrigerant leakage. If there is a refrigerant leak, call your local dealer.
- Power supply voltage：Check the power supply voltage on the local supply panel. The voltage must correspond to the voltage on the identification label of the unit.
- Air purge valve：Make sure the air purge valve is open (at least 2 turns).
- Shut-off valves：Make sure that the shut-off valves are fully open.

10.4 The circulation pump

The relationships between the head and the water flow rated,the PMW Return and the water flow rated are shown in the graph below.

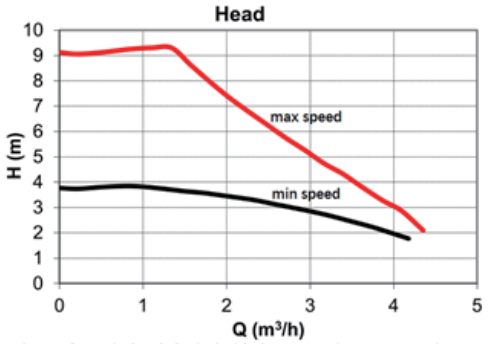

Area of regulation is included in between the max speed curve and the min speed curve.

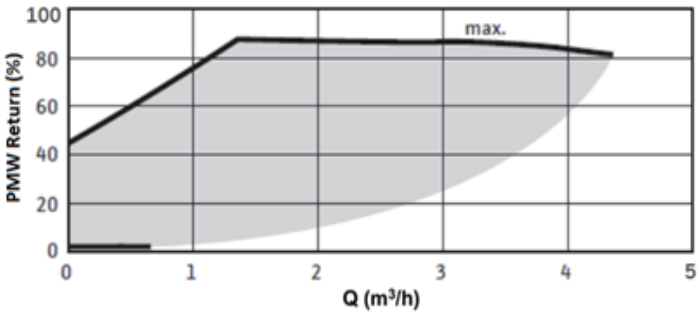

⚠ CAUTION

If the valves are at the incorrect position, the circulation pump will be damaged.

⚠ DANGER

If it's necessary to check the running status of the pump when unit power on, please do not touch the internal electronic control box components to avoid electric shock.

Failure diagnosis at first installation

- If nothing is displayed on the user interface, it is necessary to check for any of the following abnormalities before diagnosing possible error codes.

  -Disconnection or wiring error (between power supply and unit and between unit and user interface).

  -The fuse on the PCB may be broken.
- If the user interface shows "P01" as an error code, there is a possibility that there is air in the system, or the water level in the system is less than the required minimum.
- If the error code E01 is displayed on the user interface, check the wiring between the user interface and unit.

More error code and failure causes can be found in 13.4 "Error codes".

10.5 Field settings

The unit should be configured to match the installation environment (outdoor climate, installed options, etc.) and user demand. A number of field settings are available. These settings are accessible and programmable through "FUNCTION PARAMETER SET" in user interface.

Procedure

To change one or more field settings, proceed as follows.

NOTE

Temperature values displayed on the wired controller (user interface) are in °C.

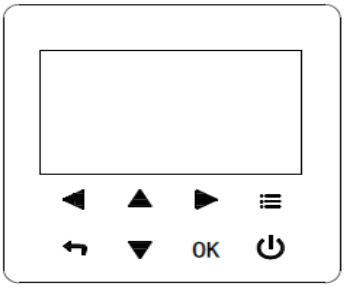

Keys	Function
	• Go to the menu structure(on the home page)
◄►▼▲	• Navigate the cursor on the display • Navigate in the menu structure • Adjust settings
	• Turn on/off the space heating/cooling operation or DHW mode • Turn on/or off functions in the menu structure
	• Come back to the up level
OK	• Go to the next step when programming a schedule in the menu structure; and confirm a selection to enter in the submenu of the menu structure.

About FUNCTION PARAMETER SET

"FUNCTION PARAMETER SET" is designed for the installer to set the parameters.

- Setting the composition of equipment.
- Setting the parameters.

How to go to FUNCTION PARAMETER SET

Go to > FUNCTION PARAMETER SET. Press OK:

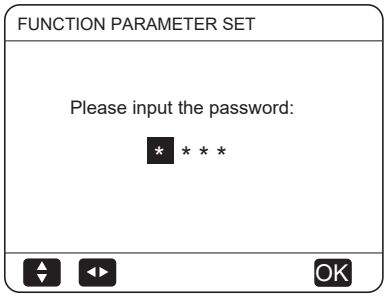

Press ◄ ► to navigate and press ▼ ▲ to adjust the numerical valve. Press OK. The password is 1212, the following pages will be displayed after putting the password:

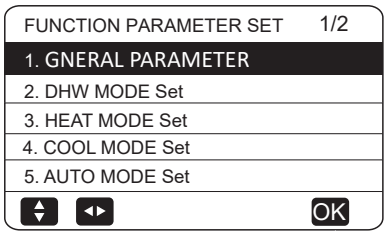

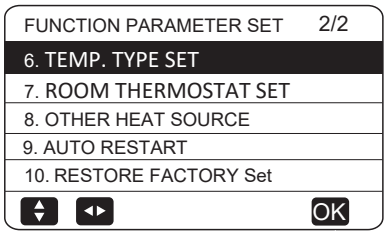

Press ▼ ▲ to scroll and use "OK" to enter submenu.

10.5.1 GENERAL PARAMETER

Go to > FUNCTION PARAMETER SET> 1.GENERAL PARAMETER. Press OK. The following pages will be displayed:

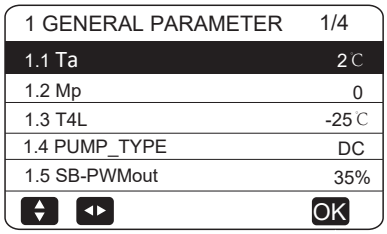

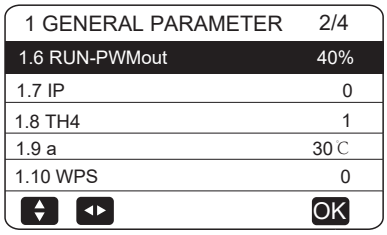

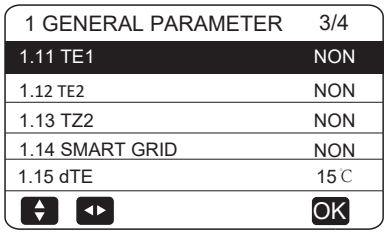

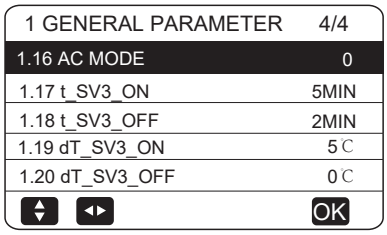

10.5.2 DHW MODE SETTING

DHW = domestic hot water

Go to ☰> FUNCTION PARAMETER SET> 2.DHW MODE. Press OK. The following pages will be displayed

2 DHW MODE	1/3
2.1 Tb	5℃
2.2 Tx	65℃
2.3 Td	30MIN
2.4 Teh	4℃
2.5 P_d_DHW	NON
↕	OK

2 DHW MODE	2/3
2.6 P_d_DIS	YES
2.7 P_d_TIME KEEP	YES
2.8 t_P_d_ON	15MIN
2.9 t_P_d_OFF	120MIN
2.10 P_d_AUTO	YES
↕	OK

2 DHW MODE	3/3
2.11 DHW MODE DISABLE	0
2.12 TANK HEATER	YES
↕	OK

10.5.3 HEAT MODE SETTING

Go to ☰> FUNCTION PARAMETER SET> 3.HEAT MODE. Press OK. The following pages will be displayed

3 HEAT MODE	1/4
3.1 HEAT TEMP. AUTO ADJUST	0
3.2 Hi_A	5℃
3.3 Lo_A	0℃
3.4 A	5℃
3.5 HIGH TEMP HEAT OFF	0
↕	OK

3 HEAT MODE	2/4
3.6 T4h	24℃
3.7 H-PUMP	3
3.8 HD	0
3.9 T4g	-10℃
3.10 ZONE A HEAT-TYPE	RAD
↕	OK

3 HEAT MODE	3/4
3.11 ZONE B HEAT-TYPE	FLH
3.12 t_T4_FRESH_H	30MIN
3.13 T4_ha1	-5℃
3.14 T4_ha2	7℃
3.15 SPTch_set1	35℃
↕	OK

3 HEAT MODE	4/4
3.16 SPTch_set2	28℃
↕	OK

10.5.4 COOL MODE SETTING

Go to ☰> FUNCTION PARAMETER SET> 4.COOL MODE. Press OK. The following pages will be displayed

4 COOL MODE	1/2
4.1 C-Pump	3
4.2 ZONE A COOL -TYPE	FCU
4.3 ZONE B COOL -TYPE	FCU
4.4 t_T4_FRESH_C	30MIN
4.5 T4_ca1	25℃
↕	OK

4 COOL MODE	2/2
4.6 T4_ca2	35℃
4.7 SPTcc_set1	16℃
4.8 SPTcc_set2	10℃
↕	OK

10.5.5 AUTO MODE SETTING

Go to ☰> FUNCTION PARAMETER SET> 5.AUTO MODE. Press OK. The following pages will be displayed

5 AUTO MODE	1/1
5.1 AUTO HEAT MAX T4	17℃
5.2 AUTO COOL MIN T4	25℃
↕	OK

10.5.6 TEMP. TYPE SETTING

About TEMP. TYPE SETTING

The TEMP. TYPE SETTING is used for selecting whether the water flow temperature or room temperature is used to control the ON/OFF of the heat pump.

When ROOM TEMP. is enabled, the target water flow temperature will be calculated from climate-related curves.

Go to ☰> FUNCTION PARAMETER SET>6.TEMP. TYPE SET. Press OK. The following pages will be displayed

6 TEMP. TYPE SET	1/1
6.1 ZONE TYPE	ONE
6.2 SINGLE ZONE OPERATION SET	0
6.3 DUAL ZONE OPERATION SET	0
↕	OK

10.5.7 ROOM THERMOSTAT

About ROOM THERMOSTAT

The ROOM THERMOSTAT is used to set whether the room thermostat is available.

How to set the ROOM THERMOSTAT

Go to ☰> FUNCTION PARAMETER SET>7.ROOM THERMOSTATSET. Press OK. The following pages will be displayed

7 ROOM THERMOSTAT TYPE SET	1/1
7.1 ROOM THERMOSTAT	NONE
7.2 SINGLE ZONE RT OPERATION	0
7.3 DUAL ZONE RT OPERATION	0
↕	OK

NOTE

ROOM THERMOSTAT = NON, no room thermostat.

ROOM THERMOSTAT = MODE SET, the wiring of room thermostat should follow method A.

ROOM THERMOSTAT=ONE ZONE, the wiring of room thermostat should follow method B.

ROOM THERMOSTAT=TWO ZONES, the wiring of room thermostat should follow method C (refer to 9.7.6 "Connection for other components/-For room thermostat")

10.5.8 OTHER HEATING SOURCE

The OTHER HEATING SOURCE is used to set the parameters of the backup heater, additional heating sources and solar energy kit.

How to enter the TEMP. TYPE SETTING

Go to ☰> FUNCTION PARAMETER SET>8.OTHER HEAT SOURCE. Press OK.The following pages will be displayed

8 OTHER HEAT SOURCE	1/1
8.1 dTso	10 ℃
8.2 tso	30 MIN
8.3 Solar_Type	0
8.4 AHS_Type	2
↕	OK

10.5.9 AUTO RESTART

sources and solar energy kit.

How to enter the AUTO RESTART

Go to ☰> FUNCTION PARAMETER SET>9.AUTO RESTART. Press OK.The following pages will be displayed

9 AUTO RESTART	1/1
9.1PR	1
↕	OK

10.5.10 RESTORE FACTORY SETTINGS

The RESTORE FACTORY SETTING is used to restore all the parameters set in the user interface to the factory setting.

How to enter the RESTORE FACTORY SET

Go to ☰> FUNCTION PARAMETER SET>10.RESTORE FACTORY SET Press OK.The following pages will be displayed

10 RESTORE FACTORY SET

All the settings will come back to factory default.
Do you want to restore factory settings?

NO YES

◄► OK

Press ◄ ► to scroll the cursor to YES and press OK.

The parameters related to this chapter are shown in the table below.

Order number	Code	State	Default	Minimum	Maximum	Setting interval	Unit
1.1	Ta	Temperature difference between target LWT and real LWT for startup heat pump	2	1	5	1	℃
1.2	Mp	Select priority mode	0	0	2	1	/
1.3	T4L	Minimum ambient temp. of compressor operation for heating and hot water	-25	-40	-21	1	℃
1.4	PUMP_TYPE	Internal DC pump type	DC	DC	AC	1	/
1.5	SB-PWMout	Standby DC pump output	35	10	100	1	%
1.6	RUN-PWMout	Minimum DC pump operation output	40	30	100	1	%
1.7	IP	Address code	0	0	15	1	/
1.8	TH4	Enabel or disable chassis heater,1=Enable,0=Disable	1	0	1	1	/
1.9	a	Return difference in leaving water controller	3	1	10	1	℃
1.10	WPS	Enable or disable water pressure detect,1=Enable,0=Disable	1	0	1	1	/
1.11	TE1	Enable or disable TE1, NON=Disable, YES=Enable	NON	NON	YES	/	/
1.12	TE2	Enable or disable TE2, NON=Disable, YES=Enable	NON	NON	YES	/	/
1.13	TZ2	Enable or disable TZ2, NON=Disable, YES=Enable	NON	NON	YES	/	/
1.14	SMART GRID	Enable or disable SG, NON=Disable, YES=Enable	NON	NON	YES	/	/
1.15	dTE	Temperature difference between TE1 and target temp.	15	0	50	1	℃
1.16	AC MODE	Select heat pump operation type	0	0	2	1	/
1.17	t_SV3_ON	SV3 on time	5	0	120	1	MIN
1.18	t_SV3_OFF	SV3 off time	2	0	120	1	MIN
1.19	dT_SV3_ON	Temperature difference for SV3 ON	5	0	10	1	℃
1.20	dT_SV3_OFF	Temperature difference for SV3 OFF	0	-10	0	1	℃
2.1	Tb	Temperature difference between target hot water and real tank water for startup heat pump	5	2	15	1	℃
2.2	Tx	Target disinfect temperature	65	55	75	1	℃
2.3	Td	Disinfect running time	30	20	120	1	MIN
2.4	Teh	Ambient temperature of tank heater startup	4	-10	40	1	℃
2.5	P_d_DHW	Enable or disable tank pump control, NON=Disable, YES=Enable	NON	NON	YES	/	/
2.6	P_d_DIS	Enable or disable tank pump in disinfect mode, NON=Disable, YES=Enable	YES	NON	YES	/	/
2.7	P_d_TIME KEEP	Enable or disable tank pump operation timing, NON=Disable, YES=Enable	YES	NON	YES	/	/
2.8	t_P_d_on	Tank pump ON time	15	5	120	1	MIN
2.9	t_P_d_off	Tank pump OFF time	120	5	180	1	MIN
2.10	P_d_AUTO	Enable or disable tank pump normal ON, NON=Disable, YES=Enable	YES	NON	YES	/	/
2.11	DHW MODE DISABLE	Enable or disable DHW mode,1=Disable, 0=Enable	0	0	1	1	/
2.12	TANK HEATER	Enable or disable tank heater,NON=Disable, YES=Enable	YES	NON	YES	/	/
3.1	HEAT TEMP. AUTO ADJUST	Enable or disable auto adjust in heating, 0=Disable, 1=Enable	0	0	1	1	/
3.2	Hi_A	High temperature compensation value	5	0	20	1	℃
3.3	Lo_A	Low temperature compensation value	0	-20	0	1	℃
3.4	A	Maximum temperature compensation value	5	0	10	1	℃
3.5	HIGH TEMP HEAT OFF	Enable or disable high temperature shutdown, 0=Disable, 1=Enable	0	0	1	1	/
3.6	T4h	Maximum shutdown T4 temperature	24	10	30	1	℃
3.7	H-PUMP	DC pump standby speed for heating	3	0	3	1	/
3.8	HD	Enable or disable IPH or AHS, 0=Enable IPH, 1=Enable AHS	0	0	1	1	/
3.9	T4g	Ambient temperature of Enabling IPH or AHS	-20	-20	20	1	℃
3.10	ZONE A HEAT-TYPE	Zone A heating terminal device type, 0=FCU,1=RAD,2=FLH	RAD	FCU	FLH	1	/
3.11	ZONE B HEAT-TYPE	Zone B heating terminal device type, 0=FCU,1=RAD,2=FLH	FLH	FCU	FLH	1	/
3.12	t_T4_FRESH_H	Refresh time of climate curve for heating	30	30	360	10	MIN
3.13	T4_ha1	Auto climate curve ambient temp. 1 for heating	-5	-25	35	1	℃
3.14	T4_ha2	Auto climate curve ambient temp. 2 for heating	7	-25	35	1	℃
3.15	SPTch_set1	Auto climate curve target temp. 1 for heating	35	25	60	1	℃
3.16	SPTch_set2	Auto climate curve target temp. 2 for heating	28	25	60	1	℃

Order number	Code	State	Default	Minimum	Maximum	Setting interval	Unit
4.1	C-Pump	DC pump standby speed for cooling	3	0	3	1	/
4.2	ZONE A COOL TYPE	Zone A cooling terminal device type, 0=FCU,1=RAD,2=FLH	FCU	FCU	FLH	1	/
4.3	ZONE B COOL TYPE	Zone B cooling terminal device type, 0=FCU,1=RAD,2=FLH	FCU	FCU	FLH	1	/
4.4	t_T4_FRESH_C	Refresh time of climate curve for cooling	30	30	360	10	MIN
4.5	T4_ca1	Auto climate curve ambient temp. 1 for cooling	25	-5	46	1	℃
4.6	T4_ca2	Auto climate curve ambient temp. 2 for cooling	35	-5	46	1	℃
4.7	SPTcc_set1	Auto climate curve target temp. 1 for cooling	16	5	25	1	℃
4.8	SPTcc_set2	Auto climate curve target temp. 2 for cooling	10	5	25	1	℃
5.1	AUTO HEAT MAX T4	Maxmum ambient temp. of auto-heating mode	17	10	17	1	℃
5.2	AUTO COOL MIN T4	Minimum ambient temp. of auto-cooling mode	25	20	29	1	℃
6.1	ZONE TYPE	Two zones, ONE= single zone, TWO=duan zone	ONE	ONE	TWO	1	/
6.2	SINGLE ZONE OPERATION SET	Single zone target temperature type	0	0	3	1	/
6.3	DUAL ZONE OPERATION SET	Dual zone target temperature type (2 and 6 for reserved)	0	0	7	1	/
7.1	ROOM THERMOSTAT	Room thermostat type, 0=NON=without room thermostat, 1=MODE SET,2=ONE ZONE,3=TWO ZONES	0	0	3	1	/
7.2	SINGLE ZONE RT OPERATION	Target temperature type on ROOM THERMOSTAT = MODE SET or ONE ZONE	0	0	1	1	/
7.3	DUAL ZONE RT OPERATION	Target temperature type on ROOM THERMOSTAT = TWO ZONES	0	0	3	1	/
8.1	dTso	Temperature difference for startup solar pump	10	2	20	1	℃
8.2	tso	Solar pump running time	30	0	90	1	MIN
8.3	Solar_Type	Solar type, 0=NON,1=Solar temp. sensor, 2=SL1SL2	0	0	2	1	/
8.4	AHS_Type	1=AHS with only heating, 2=AHS both heating and DHW	2	1	2	1	/
9.1	PR	Enable or disable auto restart,1=Enable, 0=Disable	1	0	1	1	/
10.1		YES to restore factory parameter setting ,NO to exit restoring factory parameter setting					

The function description in the table below.

Previous No.	parameter	value	function
1.10	Mp	0	hot water priority
		1	space heating/cooling priority
		2	Preemtpy
1.16	T4L		if ambient temperature less than T4L,do not turn on heat pump, but can turn on backup heater or AHS
1.17	PUMP_TYPE		AC means internal water pump is alternating current; DC means internal water pump is PWM;
1.28	SB-PWMout		means PWM pump running speed when heat pump is standby mode in which the compressor shuts down because of getting a target temperature
1.37	RUN-PWMout		PWM pump must not operate below this speed when PWM pump is in speed adjustment
1.42	IP		heat pump address code in group controller, but the function is for reserved
1.65	TE1		to activate temperature sensor mounted on top of buffer tank in cascade mode, but the function is for reserved
1.66	TE2		to activate temperature sensor mounted on bottom of buffer tank in cascade mode, but the function is for reserved
1.69	dTE		the difference between TE1/TE2 and target temperature for starting heat pump in cascade mode ,but the function is for reserved
1.67	TZ2		to activate Zone 2 inlet temperature sensor function to get a low zone 2 target water temperature
1.70	AC MODE	0	Heat pump can operate in heating mode or cooling mode
		1	Heat pump can only operate in heating mode without cooling mode
		2	Heat pump can only operate in cooling mode without heating mode

Previous No.	parameter	value	function
2.6	Teh		if ambient temerature is higher than Teh, heat pump can't turn on hot water tank heater automatically unless manullly turn on tank heater.
2.13	P_d_AUTO	NON	water tank pump always runs and doesn't stop unless manully turn off tank pump
		YES and P_d_TIME KEEP is NON	water tank pump runs for the time(set by t_p_d_on) and then off
		YES and P_d_TIME KEEP is YES	water tank pump runs by the cycle:on for the time (set by t_p_d_on)and then off for the time(set by t_p_d_off)
3.3	HEAT TEMP. AUTO ADJUST		to enable or disable adjusting the target water temperature by ambient temperature in heating mode
3.4	Hi_A		When T4 > Hi_A, the target temperature is judged according to SPTh-K, K= (T4-Hi_A) /2, and K does not exceed A（T4: ambient temp.）
3.5	Lo_A		When T4 < Lo_A, the target temperature is judged according to SPTh+K, K= (Lo_A-T4) /2, and K does not exceed A（SPTh is setting water temperature）
3.6	A		When Lo A≤T4≤Hi A, the target temperature is judged by SPTh
3.7	HIGH TEMP HEAT OFF		enable or disable the function: don't turn on heat pump if ambient temperature is higher than T4h in heating mode
3.8	T4h		
3.9	H-PUMP	0-State 1; 1-State 2; 2-State 3; 3-State 4	When the unit switches off in cooling or heating mode, the running state of DC pump can be set by the wire controller: State 1: the cycle is to be on 1 minute at the minimum output (30%) first, and then off 3 minutes. State 2: the cycle is to be on 1 minute at the minimum output (30%) first, and then off 10 minutes. State 3: the cycle is to be on 2 minutes at the minimum output (30%) first, and then off 15 minutes. State 4(default state): to keep running at the minimum output (30%).
3.47	t_T4_FRESH_H		the controller refresh the ambient temperature by the time interval(set by t_T4_FRESH_H) when use weather temperatue curve function in heating mode
4.9	C-Pump		to refer to the 3.9 H-PUMP
4.43	t_T4_FRESH_C		the controller refresh the ambient temperature by the time interval(set by t_T4_FRESH_H) when use weather temperatue curve function in cooling mode
6.2	SINGLE ZONE OPERATION SET	0=set water temp.(manually adjustment) 1=set water temp.(weather curve temp.) 2=for reserved 3=set room temp.(real weather curve temp.)	use it to set target temperature type when 6.1 ZONE TYPE=ONE(only one zone)

Previous No.	parameter	value	function
6.3	DUAL ZONE OPERATION SET	1)=0: Zone 1 and Zone 2 are both water temp.(manually adjustment) 2)=1:Zone 1 is water temp.(manually adjustment); Zone 2 is water temp.(weather curve temp.) 3)=2: for reserved 4)=3: Zone 1 is water temp.(manually adjustment);Zone 2 is room temp.(real weather curve temp.) 5)=4: Zone 1 is water temp.(real weather curve temp.); Zone 2 is water temp.(manually adjustment) 6)=5: Zone 1 and Zone 2 are both weather curve temp. 7)=6: for reserved 8)=7: Zone 1 is weather curve temp.;Zone 2 is room temp.(real weather curve temp.).	use it to set target temperature type when 6.1 ZONE TYPE=TWO(two zones)

11 TEST RUN AND FINAL CHECKS

The installer is obliged to verify correct operation of unit after installation.

11.1 Final checks

Before switching on the unit, read following recommendations:

- When the complete installation and all necessary settings have been carried out, close all front panels of the unit and refit the unit cover.
- The service panel of the switch box may only be opened by a licensed electrician for maintenance purposes.

NOTE

That during the first running period of the unit, required power input may be higher than stated on the nameplate of the unit. This phenomenon originates from the compressor that needs elapse of a 50 hours run in period before reaching smooth operation and stable power consumption.

12 MAINTENANCE AND SERVICE

In order to ensure optimal availability of the unit, a number of checks and inspections on the unit and the field wiring have to be carried out at regular intervals.

This maintenance needs to be carried out by your local technician.

⚠ DANGER

ELECTRIC SHOCK

- Before carrying out any maintenance or repairing activity, must switch off the power supply on the supply panel.
- Do not touch any live part for 10 minutes after the power supply is turned off.
- The crank heater of compressor may operate even in standby.
- Please note that some sections of the electric component box are hot.
- Forbid touch any conductive parts.
- Forbid rinse the unit. It may cause electric shock or fire.

  Forbid leave the unit unattended when service panel is removed.

The following checks must be performed at least once a year by qualified person.

- Water pressure
  Check the water pressure, if it is below 1 bar,fill water to the system.
- Water filter
  Clean the water filter.
- Water pressure relief valve
  Check for correct operation of the pressure relief valve by turning the black knob on the valve counter-clockWise:

  -If you do not hear a clacking sound, contact your local dealer.

  -In case the water keeps running out of the unit, close both the water inlet and outlet shut-off valves first and then contact your local dealer.
- Pressure relief valve hose
  Check that the pressure relief valve hose is positioned appropriately to drain the water.
- Backup heater vessel insulation cover
  Check that the backup heater insulation cover is fastened tightly around the backup heater vessel.
- Domestic hot water tank pressure relief valve (field supply) Applies only to installations with a domestic hot water tank. Check for correct operation of the pressure relief valve on the domestic hot water tank.
- Domestic hot water tank booster heater
  Applies only to installations with a domestic hot water tank. It is advisable to remove lime buildup on the booster heater to extend its life span, especially in regions with hard water. To do so, drain the domestic hot water tank, remove the booster heater from the domestic hot water tank and immerse in a bucket (or similar) with lime-removing product for 24 hours.
- Unit switch box

  -Carry out a thorough visual inspection of the switch box and look for obvious defects such as loose connections or defective wiring.

  -Check for correct operation of contactors with an ohm meter. All contacts of these contactors must be in open position.
- Use of glycol (Refer to 9.4.4 "Water circuit anti-freeze protection") Document the glycol concentration and the pH-valve in the system at least once a year.

  -A PH-valve below 8.0 indicates that a significant
- portion of the inhibitor has been depleted and that more inhibitor needs to be added.
- -When the PH-valve is below 7.0 then oxidation of the glycol occurred, the system should be drained and flushed thoroughly before severe damage occurs.

Make sure that the disposal of the glycol solution is done in accordance with relevant local laws and regulations.

13 TROUBLE SHOOTING

This section provides useful information for diagnosing and correcting certain troubles which may occur in the unit.

This troubleshooting and related corrective actions may only be carried out by your local technician.

13.1 General guidelines

Before starting the troubleshooting procedure, carry out a thorough visual inspection of the unit and look for obvious defects such as loose connections or defective wiring.

⚠ WARNING

When carrying out an inspection on the switch box of the unit, always make sure that the main switch of the unit is switched off.

When a safety device was activated, stop the unit and find out why the safety device was activated before resetting it. Under no circumstances can safety devices be bridged or changed to a valve other than the factory setting. If the cause of the problem cannot be found, call your local dealer.

If the pressure relief valve is not working correctly and is to be replaced, always reconnect the flexible hose attached to the pressure relief valve to avoid water dripping out of the unit!

NOTE

For problems related to the optional solar kit for domestic water heating, refer to the troubleshooting in the Installation and owner's manual for that kit.

13.2 General symptoms

Symptom 1: The unit is turned on but the unit is not heating or cooling as expected

POSSIBLE CAUSES	CORRECTIVE ACTION
The water flow is too low.	• Check that all shut off valves of the water circuit are in the right position. • Check if the water filter is plugged. • Make sure there is no air in the water system. • Check the water pressure. The water pressure must be>1 bar (water is cold). • Make sure that the expansion vessel is not broken. • Check that the resistance in the water circuit is not too high for the pump.
The water volume in the installation is too low.	Make sure that the water volume in the installation is above the minimum required valve (refer to "**9.4.2 Water volume and sizing expansion vessels**").

Symptom 2: Pump is making noise (cavitation)

POSSIBLE CAUSES	CORRECTIVE ACTION
There is air in the system.	Purge air.
Water pressure at pump inlet is too low.	• Check the water pressure. The water pressure must be > 1 bar (water is cold). • Check that the expansion vessel is not broken. • Check that the setting of the pre- pressure of the expansion vessel is correct (refer to ""9.4.2 Water volume and sizing expansion vessels").

Symptom 3: The water pressure relief valve opens

POSSIBLE CAUSES	CORRECTIVE ACTION
The expansion vessel is broken.	Replace the expansion vessel.
The filling water pressure in the installation is higher than 0.3MPa.	Make sure that the filling water pressure in the installation is about 0.10~0.20MPa (refer to "9.4.2 Water volume and sizing expansion vessels").

Symptom 4: The water pressure relief valve leaks

POSSIBLE CAUSES	CORRECTIVE ACTION
Dirt is blocking the water pressure relief valve outlet.	Check for correct operation of the pressure relief valve by turning the red knob on the valve counter clockWise: • If you do not hear a clacking sound, contact your local dealer. • In case the water keeps running out of the unit, close both the water inlet and outlet shut-off valves first and then contact your local dealer.

13.3 PARAMETER VIEW

This menu is for installer or service engineer reviewing the operation parameters.

At home page, go to "☰">"PARAMETER VIEW".

Press "OK". There are twelve pages for the operating parameter as following. Use ""►"、"◄"、▼ "、 "▲" to scroll.

Press"►" and "◄" to check slave units' operation parameter in cascade system. The address code in the upper right corner

PARAMETER VIEW	1/12
1 COMP. FREQUENCY	55Hz
2 EEV-1 OPEN	480STEP
3 AMBIENT TMEP. T4	30℃
4 OUT WATER TMEP. TB	30℃
5 DISCHARGE TMEP. TP	60℃

PARAMETER VIEW	2/12
6 SUCTION TMEP. TH	60℃
7 COIL TMEP. T3	50℃
8 LIQUID TMEP. T5	48℃
9 PWM PUMP	OFF
10 4-WAY VALVE	OFF

PARAMETER VIEW	3/12
11 AC FAN	OFF
12 SV1 STATUS	OFF
13 SV2 STATUS	OFF
14 IPH HEATER	OFF
15 TANK HEATER	OFF

PARAMETER VIEW	4/12
16 AC CURRENT	0.0A
17 INPUT VOLTAGE	225V
18 OIL RETURN	OFF
19 HP2	OFF
20 CHASSIS HEATER	OFF

PARAMETER VIEW	5/12
21 BUS VOLTAGE	0VDC
22 COMP.CURRENT	0.0A
23 PFC TEMP.	0℃
24 IPM TEMP.	0℃
25 DC FAN SPEED 1	770RPM

PARAMETER VIEW	6/12
26 DC FAN SPEED 2	0RPM
27 ECO. IN TEMP.	0℃
28 ECO. OUT TEMP.	0℃
29 TANK TEMP.	50℃
30 IN WATER TEMP.TA	30℃

PARAMETER VIEW	7/12
31 EEV-2 OPEN	0STEP
32 I-PUMP OUTPUT	100%
33 LOW SAT. TEMP.	2℃
34 CRANKCASE HEATER	OFF
35 PLATE HEATER	OFF

PARAMETER VIEW	8/12
36 IN WATER PRE.	0.0bar
37 OUT WATER PRE.	2.0bar
38 WATER FLOW	0.0(m^3/h)
39 WATER FLOW PWM	100%
40 UNIT MODEL	4KW

PARAMETER VIEW	9/12
41 SV3	OFF
42 FINAL TEMP. TC	0℃
43 SOLAR TEMP. Tso	90℃
44 BUFFER TEMP. TE1	20℃
45 BUFFER TEMP. TE2	20℃

PARAMETER VIEW	10/12
46 MIX IN TEMP. TZ2	20℃
47 C-A CURVE TEMP.	8℃
48 H-A CURVE TEMP.	32℃
49 C-B CURVE TEMP.	10℃
50 H-B CURVE TEMP.	35℃

PARAMETER VIEW	11/12
51 AHS	OFF
52 P_d	OFF
53 P_o	OFF
54 B ZONE P_c	OFF
55 P_s	OFF

PARAMETER VIEW	12/12
56 SG	OFF
57 ROOM TEMP. Tro	31℃

NOTE

The flow rates parameters are calculated according to the pump running parameters,the deviation is different at different flow rates,the maximum of deviation is 15%.The flow parameters are calculated according to the electrical parameters of the pump operation.

13.4 Error codes

When a safety device is activated, an error code(which does't include external failure) will be displayed on the user interface.

A list of all errors and corrective actions can be found in the table below.

Reset the safety by turning the unit OFF and back ON.

In case this procedure for resetting the safety is not successful, contact your local dealer.

Fault number	Fault name	Failure analysis	Diagnosis method	Solution
P01	Water flow protection	1. Lack of water in water system. 2. Water flow switch is fault. 3. Water system is blocked.	1. Check whether the valve of water replenishing is off. 2. Check whether the water flows witch is damage. 3. Check whether the Y shape filter is blocked.	1. Open the valve. 2. Change the water flows witch. 3. Clean or change the filternet.
P02	High pressure protection	1. Water flow is over low. 2. High pressure switch is fault. 3. Refrigerant system is blocked. 4. EXV is locked.	1. Check whether there is water shortage or insufficient pump flow; 2. Check whether the high pressure switch is damage. 3. Check whether the refrigerant system is blocked. 4. Check whether there is EXV reset sound when the unit is standby, and power on or off.	1. Refill water or Add an additional water pump. 2. Change high pressure switch. 3. Change the filter of refrigerant system. 4.Change the EXV.
P03	Low pressure protection	1. Lack of refrigerant. 2. Refrigerant system is blocked 3. The unit is not running in regulations operati -ng condition.	1. Check whether the refrigerant system is leakage. 2. Check whether the filter in refrigerant system is blocked. 3. Check whether the outdoor ambient and the inlet water temperature is normal.	1. Repair the leakage point. 2. Change the filter of refrigerant system. 3. If the ambient temper -ature and water temperature is too high or low,the unit will stop.
P04	Condenser temperature over-heat protection	1. Airflow of outdoor fan is insufficient. 2. Condenser is too dirty. 3. The temperature sensor (T3) is fault.	1. Check whether there is any obstacle which is preventing the airflow. 2. Check whether the condenser is too dirty. 3. Check whether the condenser pipe temperature sensor(T3) is normal.	1. Clean the vents 2. Clean the condenser. 3. Replace the temperat -ure sensor.
P05	Discharge temperature protection	1. Lack of refrigerant. 2. Discharge temperatur -e sensor is fault.	1. Check whether the refrigerant system is leakage. 2. Check whether the discharge temperature sensor is normal.	1. Repair the leakage point. 2. Replace the temperatu -re sensor
P06	Anti-freezing protection of leaving water	1. Water flow is too low. 2. Heat-exchanger is blocked. 3. Y shape filter in water system is blocked. 4. Load is too low.	1. Check whether there is some air in water circuit system. 2. Check whether the heat-excha -nger is blocked. 3. Check whether the Y shape filter is blocked. 4. Check whether the water circuit system is reasonable.	1. If there is a problem with the drain valve, replace it with a new one; 2. Blow the plate heat exchanger with water or high-pressure gas in the opposite direction for cleaning; 3. Clean the filter; 4. The water circulation system must have a shunt.
P07	Anti-freezing protection of condenser pipe	1. Lack of refrigerant. 2. Water circuit system is blocked. 3. Refrigerant system is blocked.	1. Check for leaks in the system; 2. Check whether Y shape filter is blocked. 3. Check whether filter in refriger -ant system is blocked.	1. Repair the leakage point. 2. Clean the filter. 3. Replace the filterr

Fault number	Fault name	Failure analysis	Diagnosis method	Solution
P08	Middle pressure protection	Middle pressure switch off	Check whether the middle pressure switch is open circuit, when turn off the unit.	Replace the middle pressure switch.
P10	Low pressure sensor protection	1. Lack of refrigerant; 2. The refrigeration system is blocked; 3. Exceeding the scope of system work.	1. Check whether the system is leaking; 2. Check if the filter net is blocked; 3. Check whether the ambient temperature or water temperat -ure exceeds the limit.	1. Repair the leak and refill the refrigerant; 2. Replace the filter; 3. Exceed the system working limit, can't run
P11	DC fan 1 failure	1. The fan is faulty or stuck; 2. The main control board is faulty	1. Check whether the fan is stuck, or replace with a new fan; 2. Replace the main control board	1. Check if the fan is stuck, or replace with a new fan; 2. Replace the main control board
P13	4-way valve fault	1. Entering/leaving water temperature sensors are reversely inserted. 2. 4-way valve is fault. 3. PCB is fault.	1. Check whether the entering and leaving temperature sensors are reversely inserted. 2. Check whether action of 4-way valve is normal. 3. Check whether the sample temperature of motherboard is accurate	1. Correct the wrong place; 2. Try to switch repeatedly to see if it works, if not, replace it; 3. If it is wrong, replace it;
P21	DC pump is abnormal	1. The water pump is faulty or stuck; 2. The system lacks water and is blocked; 3. Main control board failure	1. Check whether the water pump is blocked, or replace with a new water pump; 2. Check whether the system is short of water, whether it is blocked, and whether the valve is closed; 3. Replace the main control board	1. Check if the water pump is blocked, or replace with a new water pump; 2. Refill water or clean or replace the filter net and open the valve; 3. Replace the main control board
P25	Outlet pressure sensor failure	1. The sensor connection line is open or short -circuited; 2. Sensor failure; 3. The main control board is faulty;	1. Use a multimeter to check whether the sensor and connection are abnormal; 2. Replace the faulty sensor with a normal sensor to confirm whether it is normal; 3. Replace the main control board and confirm whether it is normal	1. Repair the connecting wire and plug or repla -ce the sensor; 2. Replace the mother -board;
E01	Communication error of controller	1. The communication cable is disconnected; 2. The wire controller is faulty; 3. The main control board is faulty;	1. Check whether the communi -cation cable is open or the plug is in poor contact; 2. Confirm whether the wire controller is normal on a normal machine; 3. Use a normal wire controller to confirm whether it is normal on the faulty machine;	1. Replace the communi -cation cable or repair; 2. Replace the line controller; 3. Replace the main control board;

Fault number	Fault name	Failure analysis	Diagnosis method	Solution
E02	TP exhaust temperature sensor failure	1. The sensor connection line is open or short -circuited; 2. Sensor failure; 3. The main control board is faulty;	1. Use a multimeter to check whether the sensor and connection are abnormal; 2. Replace the faulty sensor with a normal sensor to confirm whether it is normal; 3. Replace the main control board and confirm whether it is normal;	1. Repair the connecting wire and plug or repla -ce the sensor; 2. Replace the mother -board;
E03	T3 coil temperature sensor failure	1. The sensor connection line is open or short -circuited; 2. Sensor failure; 3. Main control board failure	1. Use a multimeter to check whether the sensor and connection are abnormal; 2. Replace the faulty sensor with a normal sensor to confirm whether it is normal; 3. Replace the main control board and confirm whether it is normal;	1. Repair the connecting wire and plug or repla -ce the sensor; 2. Replace the mother -board;
E04	T4 Ambient temperature sensor failure	1. The sensor connection line is open or short -circuited; 2. Sensor failure; 3. Main control board failure	1. Use a multimeter to check whether the sensor and connection are abnormal; 2. Replace the faulty sensor with a normal sensor to confirm whether it is normal; 3. Replace the main control board and confirm whether it is normal;	1. Repair the connecting wire and plug or repla -ce the sensor; 2. Replace the mother -board;
E05	T5 liquid pipe temperature sensor failure	1. The sensor connection line is open or short -circuited; 2. Sensor failure; 3. Main control board failure	1. Use a multimeter to check whether the sensor and connection are abnormal; 2. Replace the faulty sensor with a normal sensor to confirm whether it is normal; 3. Replace the main control board and confirm whether it is normal;	1. Repair the connecting wire and plug or replace the sensor; 2. Replace the mother -board;
E06	TH return air temperature sensor failure	1. The sensor connection line is open or short -circuited; 2. Sensor failure; 3. Main control board failure	1. Use a multimeter to check whether the sensor and connection are abnormal; 2. Replace the faulty sensor with a normal sensor to confirm whether it is normal; 3. Replace the main control board and confirm whether it is normal;	1. Repair the connecting wire and plug or replace the sensor; 2. Replace the mother -board;
E07	TW water tank temperature sensor failure	1. The sensor connection line is open or short -circuited; 2. Sensor failure; 3. Main control board failure	1. Use a multimeter to check whether the sensor and connection are abnormal; 2. Replace the faulty sensor with a normal sensor to confirm whether it is normal; 3. Replace the main control board and confirm whether it is normal;	1. Repair the connecting wire and plug or replace the sensor; 2. Replace the mother -board;

Fault number	Fault name	Failure analysis	Diagnosis method	Solution
E08	T6 Inlet water temperature sensor failure	1. The sensor connection line is open or short -circuited; 2. Sensor failure; 3. Main control board failure	1. Use a multimeter to check whether the sensor and connection are abnormal; 2. Replace the faulty sensor with a normal sensor to confirm whether it is normal; 3. Replace the main control board and confirm whether it is normal;	1. Repair the connecting wire and plug or replace the sensor; 2. Replace the mother -board;
E09	T7 outlet water temperature sensor failure	1. The sensor connection line is open or short -circuited; 2. Sensor failure; 3. Main control board failure	1. Use a multimeter to check whether the sensor and connection are abnormal; 2. Replace the faulty sensor with a normal sensor to confirm whether it is normal; 3. Replace the main control board and confirm whether it is normal;	1. Repair the connecting wire and plug or repla -ce the sensor; 2. Replace the mother -board;
E10	Communication failure between main control board and drive board	1. The communication cable is disconnected; 2. The main control board is faulty; 3. The drive module is faulty;	1. Check whether the communication cable is open or the plug is in poor contact; 2. Replace the main control board and confirm whether it is normal; 3. Replace the drive board and confirm whether it is normal;	1. Replace or repair the communication cable; 2. Replace the main control board; 3. Replace the drive module;
E14	Low pressure sensor LPS failure	1. The sensor connection line is open or short -circuited; 2. Sensor failure; 3. The main control board is faulty;	1. Check whether the sensor and connection are abnormal; 2. Replace the faulty sensor with a normal sensor to confirm whether it is normal; 3. Replace the main control board and confirm whether it is normal;	1. Repair the connecting wire and plug or replace the sensor; 2. Replace the mother -board;
E15	DC bus voltage is too low	Wiring error or IPM module failure Check whether the wiring is wrong, reconnect the cable or replace the IPM module		
E16	DC bus voltage is too high			
E17	AC current protection (input current)			
E18	IPM module is abnormal			
E19	PFC abnormal			

Fault number	Fault name	Failure analysis	Diagnosis method	Solution
E20	Compressor failed to start	Wiring error or IPM module failure Check whether the wiring is wrong, reconnect the cable or replace the IPM module		
E21	Compressor phase loss			
E22	IPM Module reset			
E23	Compressor over-current			
E24	PFC module temperature is too high			
E25	Current detection circuit failure			
E26	Out of step			
E27	PFC module temperature sensor is abnormal			
E28	communication fail			
E29	IPM module temperature is too high			
E30	IPM module temperature sensor failure			
E31	Reserved			
E32	Reserved			
E33	Reserved			
E34	AC input voltage is abnormal			

Fault number	Fault name	Failure analysis	Diagnosis method	Solution
E51	The built-in temperature sensor Tro of the wire controller is faulty	Wiring error or IPM module failure Check whether the wiring is wrong, reconnect the cable or replace the IPM module		
E49	TC error the final water temperature sensor			
E52	Zone 2 temperature sensor Tw2 error			
E53	Up temperature sensor TE1 of buffer tank error			
E54	Down temperature sensor TE2 of buffer tank error			
E50	Solar temperature sensor Tso error			
E56	outlet water pressure sensor PS1 error			
E35	Drive EEPR error			
E36	Power off reset			
E37	Reserved			
E38	Reserved			

14 TECHNICAL SPECIFICATIONS

14.1 General

Model	1 phase						
	4kW	6kW	8kW	10kW	12kW	14kW	16kW
Nominal capacity	Refer to the Technical Data						
Weight							
Net weight	76kg	78kg	80kg	93kg	97kg	117kg	117kg
Gross weight	91kg	93kg	93.5kg	108kg	117kg	136kg	136kg
Connections							
water inlet/outlet							
Water drain	hose nipple						
Expansion vessel							
volume	5L						
Maximum working pressure (MWP)	3 bar						
Pump							
Type	water cooled						
No. of speed	Variable speed						
Pressure relief valve water circuit	3 bar						
Operation range - water side							
heating	+12~+65°C						
cooling	+5~+25°C						
Operation range - air side							
heating	-25 to 35°C						
cooling	-5 to 43°C						
domestic hot water by heat pump	-25 to 43°C						

14.2 Electrical specifications

Model		1-phase 4/6/8/10/12/14/16kW
Standard unit	Power Supply	220-240V~ 50Hz
	Nominal Running Current	See “9.7.4 Safety device requirement”
Backup heater	Power Supply	See “9.7.4 Safety device requirement”
	Nominal Running Current	

14.3 General(3-Phase)

Model	3 phase		
	12kW	14kW	16kW
Nominal capacity	Refer to the Technical Data		
Weight			
Net weight	109kg	131kg	131kg
Gross weight	126kg	150kg	150kg
Connections			
water inlet/outlet			
Water drain	hose nipple		
Expansion vessel			
volume	5L		
Maximum working pressure (MWP)	3 bar		
Pump			
Type	water cooled		
No. of speed	Variable speed		
Pressure relief valve water circuit	3 bar		
Operation range - water side			
heating	+12~+65°C		
cooling	+5~+25°C		
Operation range - air side			
heating	-25 to 35°C		
cooling	-5 to 43°C		
domestic hot water by heat pump	-25 to 43°C		

14.4 Electrical specifications(3-Phase)

Model		3-phase 12/14/16kW
Standard unit	Power Supply	380-415V~ 50Hz
	Nominal Running Current	See “9.7.4 Safety device requirement”
Backup heater	Power Supply	See “9.7.4 Safety device requirement”
	Nominal Running Current	

15 INFORMATION SERVICING

1) Checks to the area
Prior to beginning work on systems containing flammable refrigerants, safety checks are necessary to ensure that the risk of ignition is minmised. For repair to the refrigerating system, the following precautions shall be complied with prior to conducting work on the system.

2) Work procedure
Works shall be undertaken under a controlled procedure so as to minimise the risk of a flammable gas or vapour being present while the work is being performed.

3) General work area
All mintenance staff and others working in the local area shall be instructed on the nature of work being carried out. work in confined sapces shall be avoided. The area around the work space shall be sectioned off. Ensure that the conditions within the area have been made safe by control of flammable material.

4) Checking for presence of refrigerant
The area shall be checked with an appropriate refrigerant detector prior to and during work, to ensure the technician is aware of potentially flammable atmospheres. Ensure that the leak detection equipment being used is suitable for use with flammable refrigerants, i.e. no sparking, adequately sealed or intrinsically safe.

5) Presence of fire extinguisher
If any hot work is to be conducted on the refrigeration equipment or any associated parts, appropriate fire extinguishing equipment shall be available to hand. Have a dry power or CO_2 fire extinguisher adjacent to the charging area.

6) No ignition sources
No person carrying out work in relation to a refrigeration system which involves exposing any pipe work that contains or has contained flammable refrigerant shall use any sources of ignition in such a manner that it may lead to the risk of fire or explosion. All possible ignition sources, including cigarette smoking, should be kept sufficiently far away from the site of installation, repairing, removing and disposal, during which flammable refrigerant can possibly be released to the surrounding space. Prior to work taking place, the area around the equipment is to be surveyed to make sure that there are no flammable hazards or ignition risks. NO SMOKING signs shall be displayed.

7) Ventilated area
Ensure that the area is in the open or that it it adequately ventilated before breaking into the system or conducting any hot work. A degree of ventilation shall continue during the period that the work is carried out. The ventilation should safely disperse any released refrigerant and preferably expel it externally into the atmosphere.

8) Checks to the refrigeration equipment
Where electrical components are being changed, they shall be fit for the purpose and to the correct specification. At all times the manufacturer s maintenance and service guidelines shall be followed. If in doubt consult the manufacturer s technical department for assistance. The following checks shall be applied to installations using flammable refrigerants.

- The charge size is in accordance with the room size within which the refrigerant containing parts are installed.
- The ventilation machinery and outlets are operating adequately and are not obstructed.
- If an indirect refrigerating circuit is being used, the secondary circuits shall be checked for the presence of refrigerant; marking to the equipment continues to be visible and legible.
- Marking and signs that are illegible shall be corrected.
- Refrigeration pipe or components are installed in a position where they are unlikely to be exposed to any substance which may corrode refrigerant containing components, unless the components are constructed of materials which are inherently resistant to being corroded or are suitably protected against being so corroded.

9) Checks to electrical devices
Repair and maintenance to electrical components shall include initial safety checks and component inspection procedures. If a fault exists that could compromise safety, then no electrical supply shall be connected to the circuit until it is satisfactorily dealt with. If the fault cannot be corrected immediately but it is necessary to continue operation, and adequate temporary solution shall be used. This shall be reported to the owner of the equipment so all parties are advised.

Initial safety checks shall include:

- That capacitors are discharged: this shall be done in a safe manner to avoid possibility of sparking.
- That there no live electrical components and wiring are exposed while charging, recovering or purging the system.
- That there is continuity of earth bonding.

10) Repairs to sealed components

a) During repairs to sealed components, all electrical supplies shall be disconnected from the equipment being worked upon prior to any removal of sealed covers, etc. If it is absolutely necessary to have an electrical supply to equipment during servicing, then a permanently operating form of leak detection shall be located at the most critical point to warn of a potentially hazardous situation.

b) Particular attention shall be paid to the following to ensure that by working on electrical components, the casing is not altered in such a way that the level of protection is affected. This shall include damage to cables, excessive number of connections, terminals not made to original specification, damage to seals, incorrect fitting of glands, etc.

- Ensure that apparatus is mounted securely.
- Ensure that seals or sealing materials have not degraded such that they no longer serve the purpose of preventing the ingress of flammable atmospheres. Replacement parts shall be in accordance with the manufacturer s specifications.

NOTE

The use of silicon sealant may inhibit the effectiveness of some types of leak detection equipment. Instrinsically safe components do not have to be isolated prior to working on them.

11) Repair to intrinsically safe components
Do not apply any permanent inductive or capacitance loads to the circuit without ensuring that this will not exceed the permissible voltage and current permitted for the equipment in use. Intrinscially safe components are the only types that can be worked on while live in the presence of a flammable atmosphere. The test apparatus shall be at the correct rating. Replace components only with parts specified by the manufacturer. Other parts may result in the ignition of refrigerant in the atmosphere from a leak.

12) Cabling
Check that cabling will not be subject to wear, corrosion, excessive pressure, vibration, sharp edges or any other adverse environmental effects. The check shall also take into account the effects of aging or continual vibration from sources such as compressors or fans.

13) Detection of flammable refrigerants
Under no circumstances shall potential sources of ignition be used in the searching for or detection of refrigerant leaks. A halide torch (or any other detector using a naked flame) shall not be used.

14) Leak detection methods
The following leak detection methods are deemed acceptable for systems containing flammable refrigerants. Electronic leak detectors shall be used to detect flammable refrigerants, but the sensitivity may not be adequate, or may need re-calibration.(-Detection equipment shall be calibrated in a refrigerant-free area.) Ensure that the detector is not a potential source of ignition and is suitable for the refrigerant. Leak detection equipment shall be set at a percentage of the LFL of the refrigerant and shall be calibrated to the refrigerant employed and the appropriate percentage of gas (25% maximum) is confirmed. Leak detection fluids are suitable for use with most refrigerants but the use of detergents containing chlorine shall be avoided as the chlorine may react with the refrigerant and corrode the copper pipe-work. If a leak is suspected ,all naked flames shall be removed or extinguished. If a leakage of refrigernat is found which requires brazing, all of the refrigerant shall be recovered from the system, or isolated(by means of shut off valves) in a part of the system remote from the leak . Oxygen free nitrogen(OFN) shall then be purged through the system both before and during the brazing process.

15) Removal and evacuation
When breaking into the refrigerant circuit to make repairs of for any other purpose conventional procedures shall be used, However, it is important that best practice is followed since flammability is a consideration. The following procedure shall be adhered to:

- Remove refrigerant;
- Purge the circuit with inert gas;
- Evacuate;
- Purge again with inert gas;
- Open the circuit by cutting or brazing.

The refrigerant charge shall be recovered into the correct recovery cylinders. The system shall be flushed with OFN to render the unit safe. This process may need to be repeated several times.

Compressed air or oxygen shall not be used for this task.
Flushing shall be achieved by breaking the vacuum in the system with OFN and continuing to fill until the working pressure is achieved, then venting to atmosphere, and finally pulling down to a vacuum. This process shall be repeated until no refrigerant is within the system.

When the final OFN charge is used, the system shall be vented down to atmospheric pressure to enable work to take place.
This operation is absolutely vital if brazing operations on the pipe-work are to take place.
Ensure that the outlet for the vacuum pump is not closed to any ignition sources and there is ventilation available.

16) Charging procedures
In addition to conventional charging procedures, the following requirements shall be followed:

- Ensure that contamination of different refrigerants does not occur when using charging equipment. Hoses or lines shall be as short as possible to minimize the amount of refrigerant contained in them.
- Cylinders shall be kept upright.
- Ensure that the refrigeration system is earthed prior to charging the system with refrigerant.
- Label the system when charging is complete(if not already).
- Extreme care shall be taken not to overfill the refrigeration system.
- Prior to recharging the system it shall be pressure tested with OFN. The system shall be leak tested on completion of charging but prior to commissioning. A follow up leak test shall be carried out prior to leaving the site.

17) Decommissioning
Before carrying out this procedure, it is essential that the technician is completely familiar with the equipment and all its detail. It is recommended good practice that all refrigerants are recovered safely. Prior to the task being carried out, an oil and refriger ant sample shall be taken.

In case analysis is required prior to re-use of reclaimed refrigerant. It is essential that electrical power is available before the task is commenced.
a) Become familiar with the equipment and its operation.
b) Isolate system electrically
c) Before attempting the procedure ensure that:

- Mechanical handling equipment is available, if required, for handling refrigerant cylinders.
- All personal protetive equipment is available and being used correctly.
- The recovery process is supervised at all times by a competent person.
- Recovery equipment and cylinders conform to the appropriate standards.

d) Pump down refrigerant system, if possible.
e) If a vacuum is not possible, make a manifold so that refrigerant can be removed from various parts of the system.
f) Make sure that cylinder is situated on the scales before recovery takes place.
g) Start the recovery machine and operate in accordance with manufacturer s instructions.
h) Do not overfill cylinders. (No more than 80% volume liquid charge).
i) Do not exceed the maximum working pressure of the cylinder, even temporarily.
j) When the cylinders have been filled correctly and the process completed, make sure that the cylinders and the equipment are removed from site promptly and all isolation valves on the equipment are closed off.
k) Recovered refrigerant shall not be charged into another refrigeration system unless it has been cleaned and checked.

18) Labelling
Equipment shall be labelled stating that it has been de-commissioned and emptied of refrigerant. The label shall be dated and signed. Ensure that there are labels on the equipment stating the equipment contains flammable refrigerant.

19) Recovery
When removing refrigerant from a system, either for service or decommissioning, it is recommended good practice that all refrigerants are removed safely.
When tranferring refrigerant into cylinders, ensure that only appropriate refrigerant recovery cylinders are employed. Ensure that the correct numbers of cylinders for holding the total system charge are available. All cylinders to be used are designated for the recovered refrigerant and labelled for that refrigerant(i.e special cylinders for the recovery of refrigerant). Cylinders shall be complete with pressure relief valve and associated shut-off valves in good working order.
Empty recovery cylinders are evacuated and, if possible, cooled before recovery occurs.
The recovery equipment shall be in good working order with a set of instructions concerning the equipment that is at hand and shall be suitable for the recovery of flammable refrigerants. In addition, a set of calibrated weighing scales shall be available and in good working order.
Hoses shall be complete with leak-free disconnect couplings and in good condition. Before using the recovery machine, check that it is in satisfactory working order, has been properly maintained and that any associated electrical components are sealed to prevent ignition in the event of a refrigerant release. Consult manufacturer if in doubt.
The recovered refrigerant shall be returned to the refrigerant supplier in the correct recovery cylinder, and the relevant Waste Transfer Note arranged. Do not mix refrigerants in recovery units and especially not in cylinders.
If compressors or compressor oils are to be removed, ensure that they have been evacuated to an acceptable level to make certain that flammable refrigerant does not remain within the lubricant. The evacuation process shall be carried out prior to retruning the compressor to the suppliers. Only electric heating to the compressor body shall be employed to accelerate this process. When oil is drained from a system, it shall be carried out safely.

20) Transportation, marking and storage for units
Transport of equipment containing flammable refrigerants Compliance with the transport regulations.
Marking of equipment using signs Compliance with local regulations.
Disposal of equipment using flammable refrigerants Compliance with national regulations.
Storage of equipment/appliances.
The storage of equipment should be in accordance with the manufacturer’s instructions.
Storage of packed (unsold) equipment .
Storage package protection should be constructed such that mechanical damage to the equipment inside the package will not cause a leak of the refrigerant charge.
The maximum number of pieces of equipment permitted to be stored together will be determined by local regulations.

ANNEX A: Refrigerant cycle

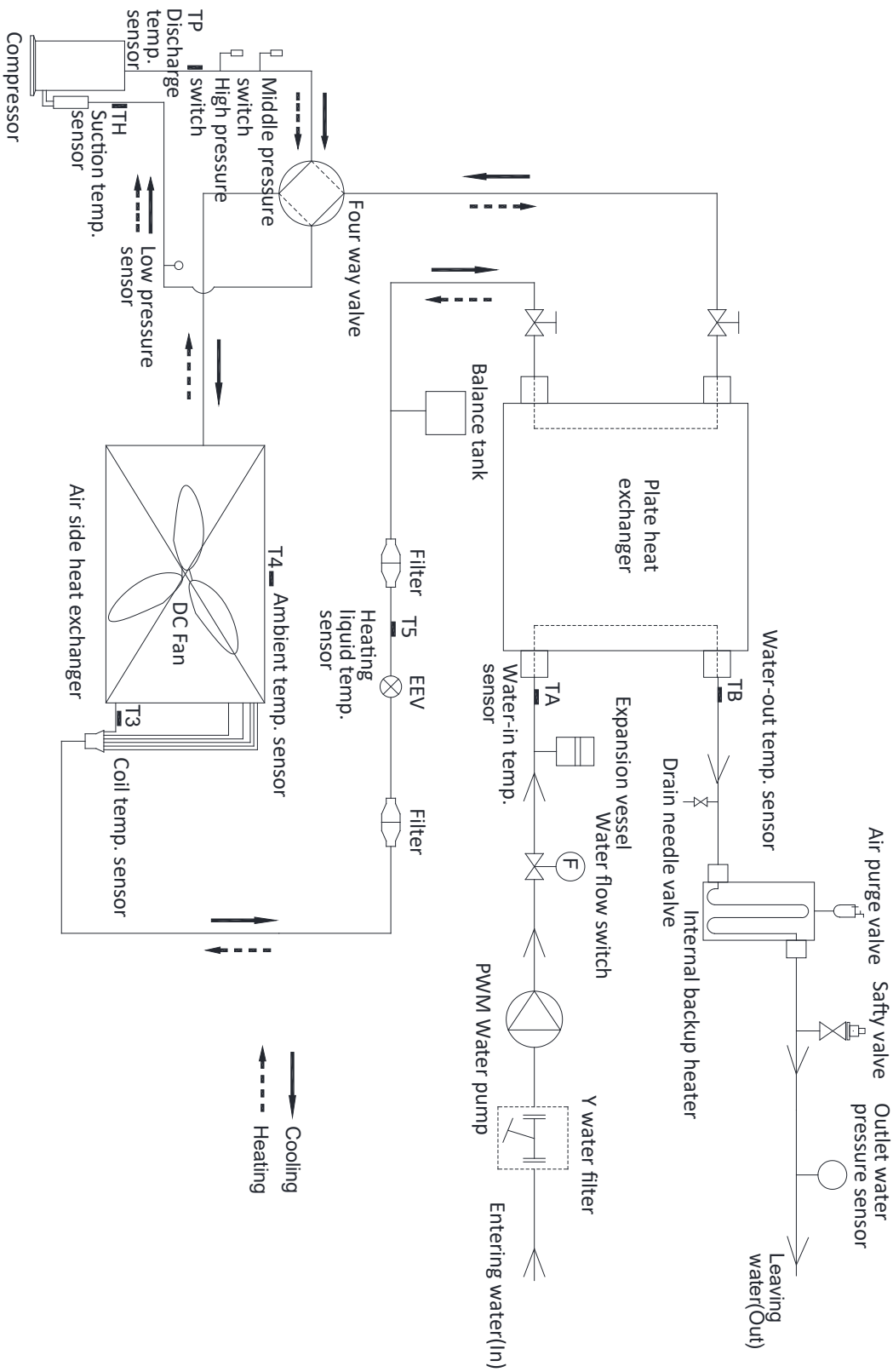

ANNEX K:

Electrical wiring diagram of the unit（4~6kW）

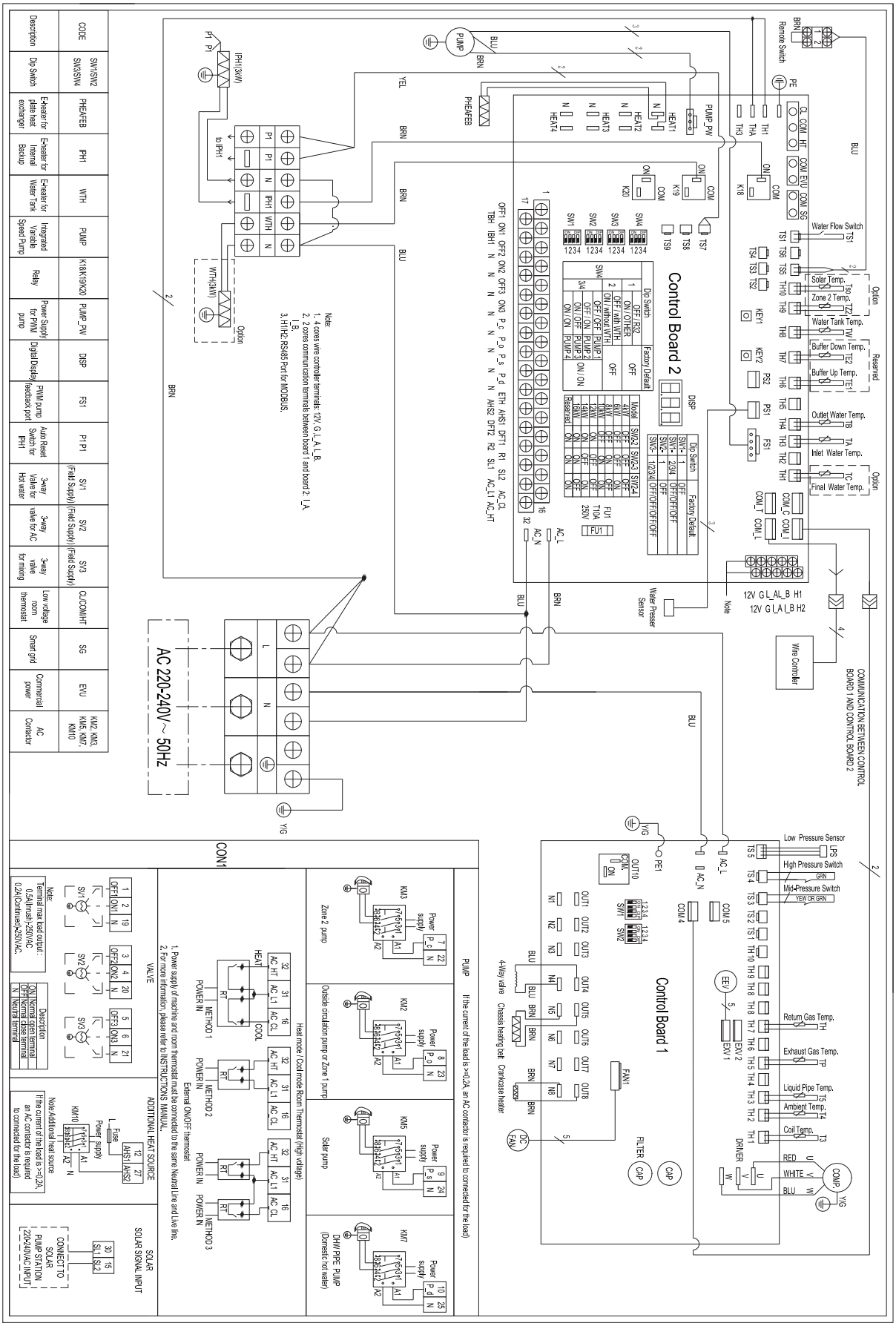

Electrical wiring diagram of the unit（8~12kW）

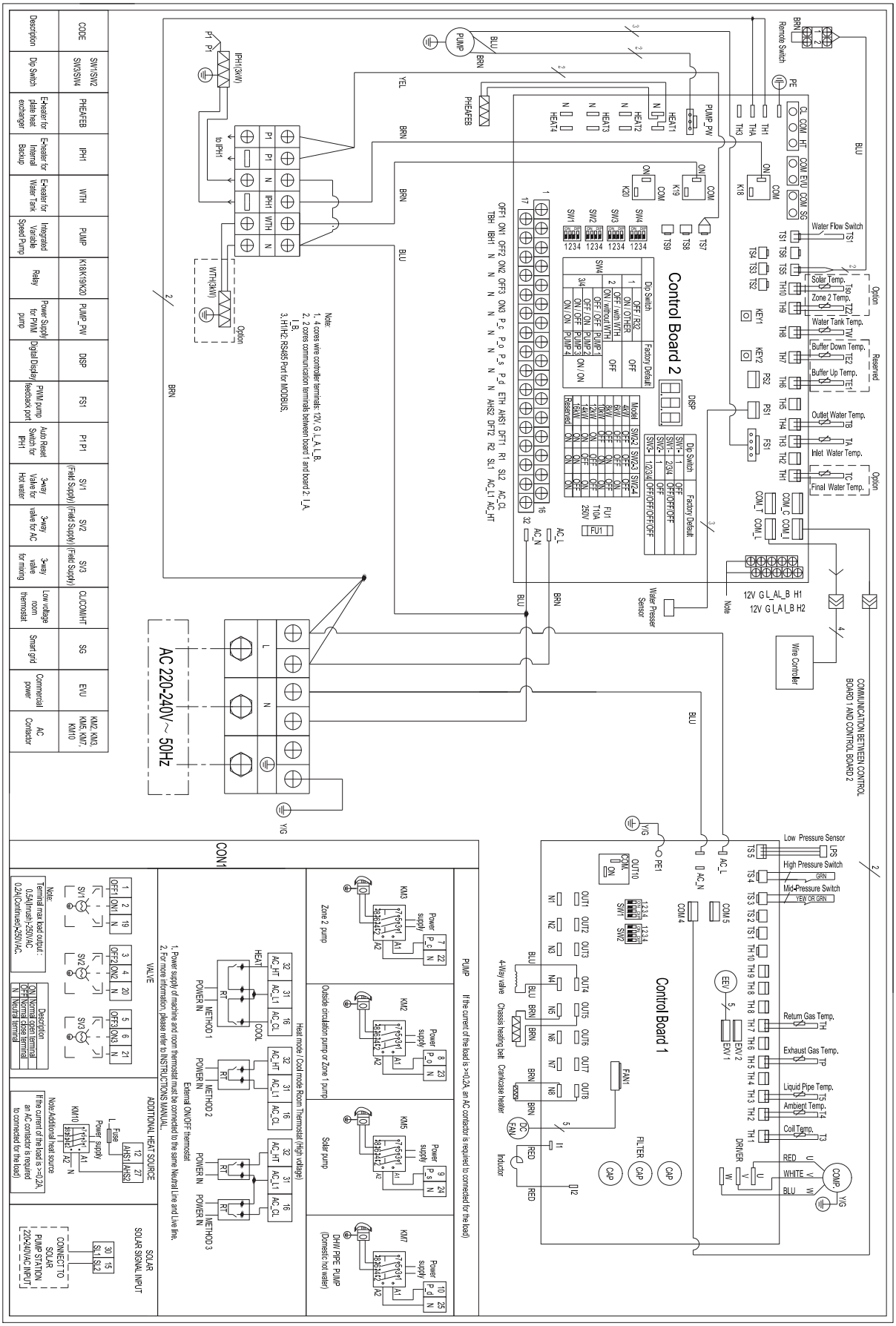

ANNEX K:

Electrical wiring diagram of the unit（14~16kW）

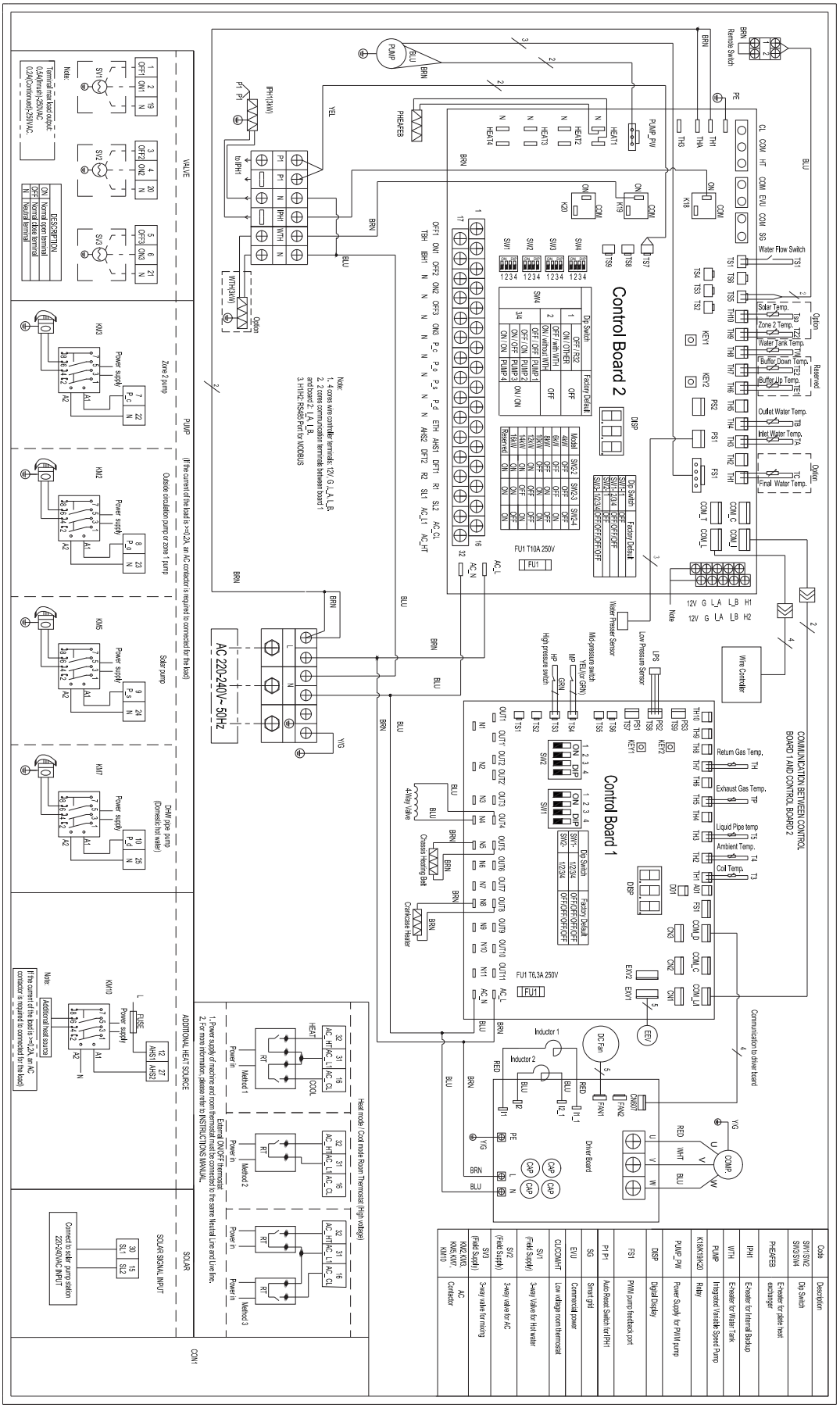

Electrical wiring diagram of the unit（3-phase 12~16kW）

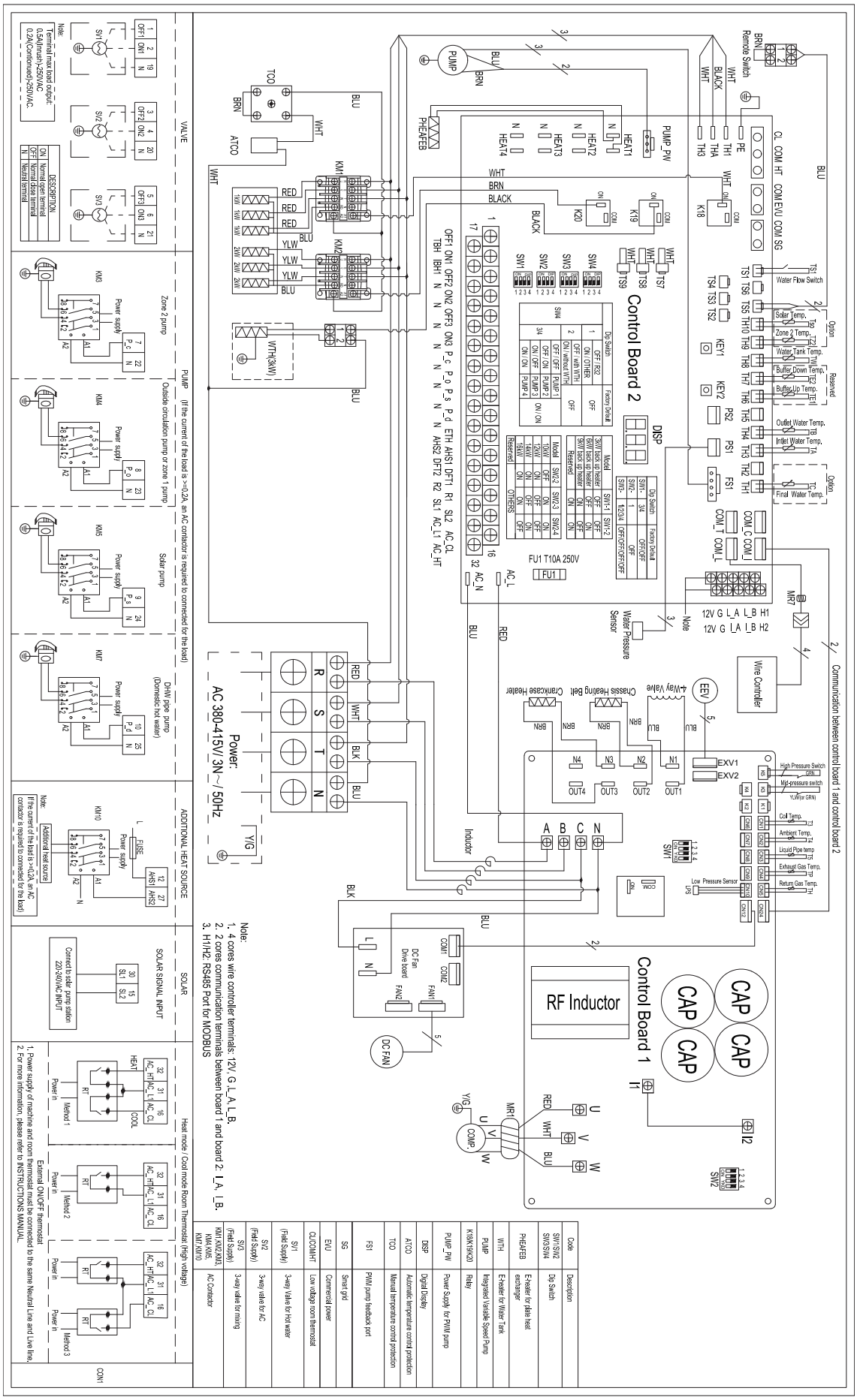

802000101265
SMS-VANGL-KS-160W/EN8SBP-A5B2-1[A]