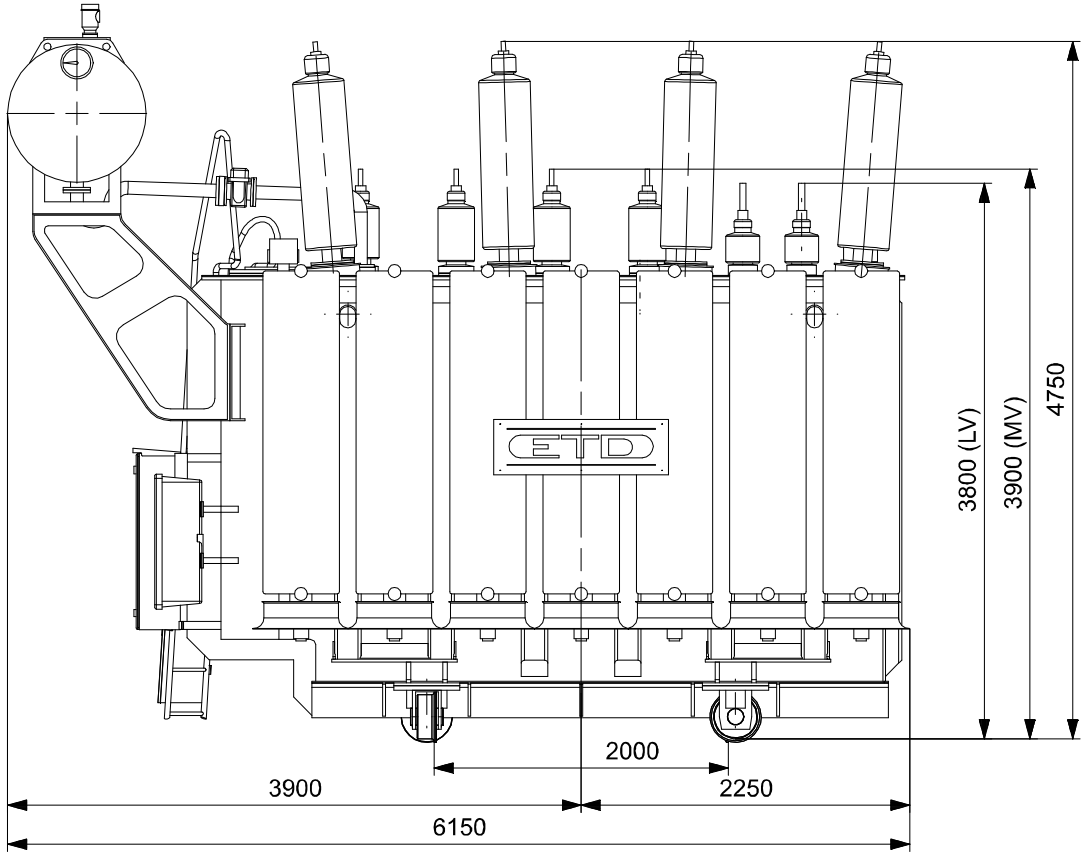

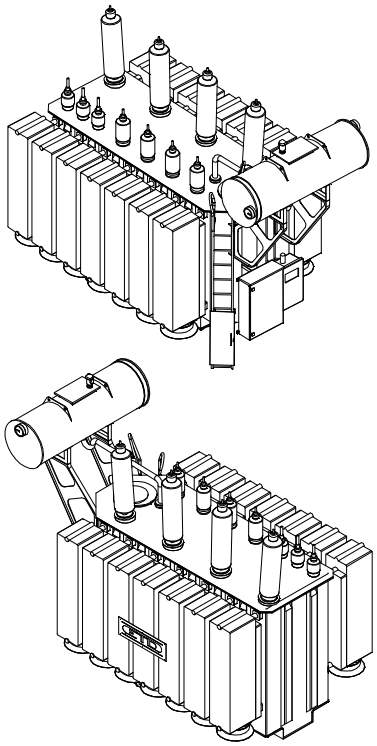

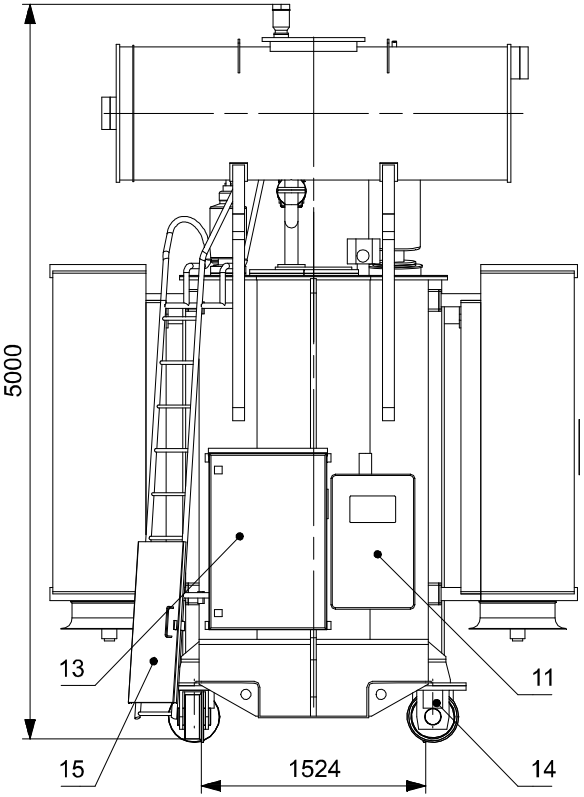

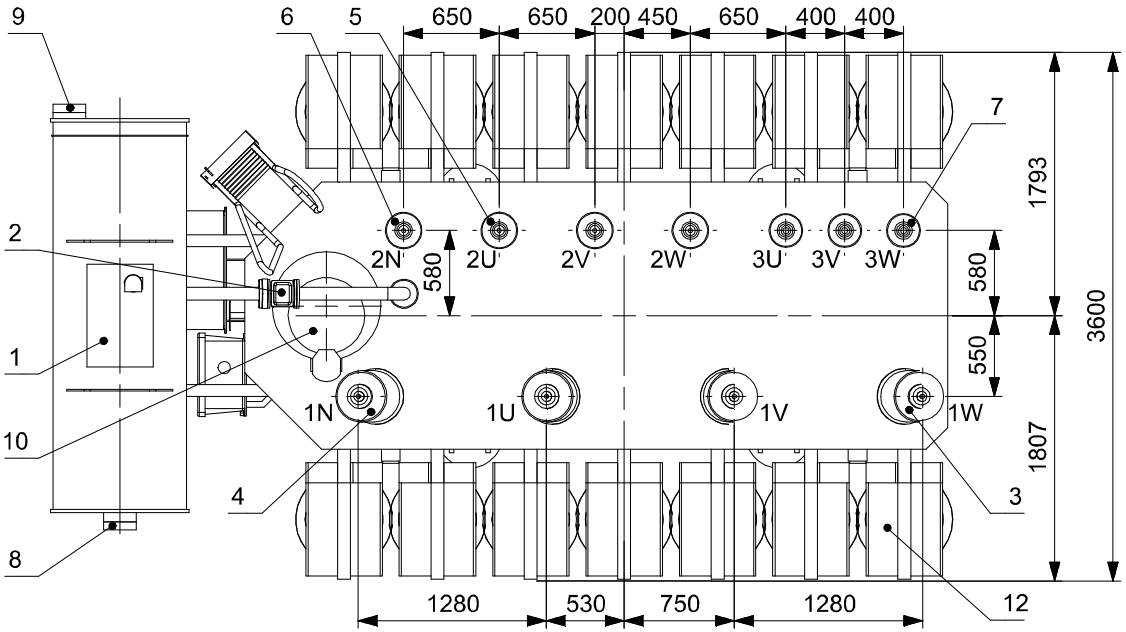

Dr. Michael Amon

Digitálně podepsal Dr. Michael Amon
Datum: 2023.06.30 14:49:37 +02'00'

Total weight of the transformer:	59 500kg
Oil weight:	14 200kg
Transport weight with oil:	49 300kg

1. Conservator
2. Buchholz relay
3. HV bushings
4. HV neutral bushing
5. MV bushings
6. MV neutral bushing
7. LV bushings
8. Transformer oil level indicator
9. OLTC oil level indicator
10. OLTC
11. OLTC drive
12. Cooling system
13. Control box
14. Carriage
15. Ladder

Poznamka	ME000161392(01)			Celkova cist hmotnost kg	
Meritko	Kreslil	Kysliuk	C.snimku	Zmena / Datum / Podpis / Index zmeny	
N	Prezkousel				
	Norm.ref.		C.transp.		
	Vyr.projedn.	Schvalil	C.CAD		
		Dne 25.04.2023			
Typ		Skupina		Stary vykres	Novy vykres
Nazev	Transformer 25MVA 115±9x1.778%/38.5±2x2.5%/11kV YNyn0d11; ONAN/ONAF			Preliminary outline drawing	
				Pocet listu 1	List