FIȘĂ TEHNICĂ E-MTE-T - Minishelter metalic termoizolat echipat

Nr. Crt.	Specificațiile tehnice impuse prin Caietul de sarcini	Corespondența propunerii tehnice cu specificațiile tehnice impuse prin Caietul de sarcini	Producător
0	1	2	3
1.	**Parametrii tehnici si functionali:** **Minishelter:** - Dimensiuni constructive minime: L=2400mm, l=800mm, h=2000 mm. Material: • cadru: oţel vopsit de 1.5mm; • uşa oţel vopsit de 2mm; • panouri posterioare, laterale şi superioare: oţel vopsit de 1,5mm; • contrapanou: oţel zincat de 3mm; • plăci inferioare: oţel zincat de 1 mm; - Cadru: complet sudat la colţuri; - Uşă: montată cu patru balamale ce permit deschiderea pe stânga sau pe dreapta; - Panou posterior: fixat cu şuruburi. Opţiuni standard pentru montarea unei uşi posterioare; - Panouri laterale: detaşabile fixate în 8 şuruburi; - Panou superior: Demontabil. Cu posibilitatea montării protecţiei de ploaie; - Încuietoare: Sistem de închidere în 4 puncte. Încuietoare standard butuci standard; - Contrapanou: dublu pliat cu glisare în poziţie, reglabil pe adâncime; - Pământare: toate panourile sunt legate la masă prin intermediul fitingurilor de fixare şi echipate cu un bolt de pământare separat; - Finisaj: Vopsea pudră structurată RAL 7035, vopsit în câmp electrostatic cu vopsea 100% poliester cu rezistenţă pentru mediu agresiv; - Accesul cablurilor în interiorul minishelterului se va realiza prin sisteme etanşe - Protecţie: corespunde cu IP 54, IK 10 - Termoizolarea şi termostatarea: toate panourile vor fi prevăzute cu sistem termoizolant între folii de aluminiu; - Ventilaţie forţată asigurată prin montarea de ventilatoare cu filtru şi grile de aer cu filtru cu IP54 montate pe minishelter - Capac frontal fabricat prin injectare plastică rezistent la radiatii UV; - Încălzire anticondens asigurată de rezistenţe de încălzire cu ventilator. Temperatura maximă de suprafată:85°C.	**Parametrii tehnici si functionali:** **Minishelter:** - Dimensiuni constructive minime: L=2400mm, l=800mm, h=2000 mm. Material: • cadru: oţel vopsit de 1.5mm; • uşa oţel vopsit de 2mm; • panouri posterioare, laterale şi superioare: oţel vopsit de 1,5mm; • contrapanou: oţel zincat de 3mm; • plăci inferioare: oţel zincat de 1 mm; - Cadru: complet sudat la colţuri; - Uşă: montată cu patru balamale ce permit deschiderea pe stânga sau pe dreapta; - Panou posterior: fixat cu şuruburi. Opţiuni standard pentru montarea unei uşi posterioare; - Panouri laterale: detaşabile fixate în 8 şuruburi; - Panou superior: Demontabil. Cu posibilitatea montării protecţiei de ploaie; - Încuietoare: Sistem de închidere în 4 puncte. Încuietoare standard butuci standard; - Contrapanou: dublu pliat cu glisare în poziţie, reglabil pe adâncime; - Pământare: toate panourile sunt legate la masă prin intermediul fitingurilor de fixare şi echipate cu un bolt de pământare separat; - Finisaj: Vopsea pudră structurată RAL 7035, vopsit în câmp electrostatic cu vopsea 100% poliester cu rezistenţă pentru mediu agresiv; - Accesul cablurilor în interiorul minishelterului se va realiza prin sisteme etanşe - Protecţie: corespunde cu IP 54, IK 10 - Termoizolarea şi termostatarea: toate panourile vor fi prevăzute cu sistem termoizolant între folii de aluminiu; - Ventilaţie forţată asigurată prin montarea de ventilatoare cu filtru şi grile de aer cu filtru cu IP54 montate pe minishelter - Capac frontal fabricat prin injectare plastică rezistent la radiatii UV; - Încălzire anticondens asigurată de rezistenţe de încălzire cu ventilator. Temperatura maximă de suprafată:85°C.	**TOTALGAZ INDUSTRIE SRL**

	- Puterea rezistenţelor şi debitul de aer a ventilatoarelor se va determina cu ajutorul unui program de control termic - Controlul climatizării va fi facută cu un higrotermostat. Durată de viaţă > 100.000 cicluri. - Temperatura de exploatare între: -20°C - +80°C; - Echipare cu corp de iluminat cu tub LED minim 900lm şi întrerupător pe uşă; **TGA /TO:** - Material: • cadru: oţel vopsit de 1.5mm; • placă intrare cabluri: oţel de 1.4mm; • uşa oţel de 2mm; • contrapanou: otel galvanizat de 2mm; - Corp: plat şi sudat pe margini; patru orificii pentru fixare pe perete,stanţate în exterior, pentru a permite circulaţia aerului în partea posterioară; - Uşă: montare pe suprafaţă, cu o deschidere de 1300. Balamalele demontabile mascate, cu bolţ captiv. Etanşeitatea este asigurată printr-o garnitură injectată (turnată) dintr-o bucată, extrudată din poliuretan; - Încuietoare: particularizată, cu bac dublu, pentru deschiderea facilă a uşii. Butuc "double-bif' de 3mm şi mişcare la 90°. - Contrapanou: fixat pe şuruburi M8 sudate prin presiune pe partea posterioară a cofretului; - Protecţie: conform minim IP 54, IK 10; - Vopsea pudră structurată RAL 7035. **Echipare minimală:** - TGA - UPS automatizare 3000VA -1 buc. - Întreruptor instalaţie iluminat exterior -1 buc. - Întreruptor instalaţie iluminat interior minishelter -1 buc. - Centrală incendiu -1 buc. - Detector de fum -1 buc. - Detector de gaz -1 buc. - Declanşator manual -1 buc. - Sirenă incendiu -1 buc. - Centrală efracţie -1 buc. - Detector efracţie -2 buc. - Sirenă efracţie -1 buc. - NVR -1 buc. - UPS sistem 1500 VA CCTV -1 buc. - Modem transmisie date -1 buc. - Tablou odorizator -1 buc.	- Puterea rezistenţelor şi debitul de aer a ventilatoarelor se va determina cu ajutorul unui program de control termic - Controlul climatizării va fi facută cu un higrotermostat. Durată de viaţă > 100.000 cicluri. - Temperatura de exploatare între: -20°C - +80°C; - Echipare cu corp de iluminat cu tub LED minim 900lm şi întrerupător pe uşă; **TGA /TO:** - Material: • cadru: oţel vopsit de 1.5mm; • placă intrare cabluri: oţel de 1.4mm; • uşa oţel de 2mm; • contrapanou: otel galvanizat de 2mm; - Corp: plat şi sudat pe margini; patru orificii pentru fixare pe perete,stanţate în exterior, pentru a permite circulaţia aerului în partea posterioară; - Uşă: montare pe suprafaţă, cu o deschidere de 1300. Balamalele demontabile mascate, cu bolţ captiv. Etanşeitatea este asigurată printr-o garnitură injectată (turnată) dintr-o bucată, extrudată din poliuretan; - Încuietoare: particularizată, cu bac dublu, pentru deschiderea facilă a uşii. Butuc "double-bif' de 3mm şi mişcare la 90°. - Contrapanou: fixat pe şuruburi M8 sudate prin presiune pe partea posterioară a cofretului; - Protecţie: conform minim IP 54, IK 10; - Vopsea pudră structurată RAL 7035. **Echipare minimală:** - TGA - UPS automatizare 3000VA -1 buc. - Întreruptor instalaţie iluminat exterior -1 buc. - Întreruptor instalaţie iluminat interior minishelter -1 buc. - Centrală incendiu -1 buc. - Detector de fum -1 buc. - Detector de gaz -1 buc. - Declanşator manual -1 buc. - Sirenă incendiu -1 buc. - Centrală efracţie -1 buc. - Detector efracţie -2 buc. - Sirenă efracţie -1 buc. - NVR -1 buc. - UPS sistem 1500 VA CCTV -1 buc. - Modem transmisie date -1 buc. - Tablou odorizator -1 buc.	

2.	**Specificaţii de performanţă şi condiţii privind siguranta în exploatare:** - Uşile frontale dotate cu sistem de securizare cu cheie; - Uşile frontale se vor deschide la 185°;	**Specificaţii de performanţă şi condiţii privind siguranta în exploatare:** - Uşile frontale dotate cu sistem de securizare cu cheie; - Uşile frontale se vor deschide la 185°;	
3.	**Conditii privind conformitatea cu standarde relevante:** - Constructie conform normelor si standardelor - Minishelterul va fi livrat cu toate conexiunile electrice executate între echipamentele din interiorul acestuia.	**Conditii privind conformitatea cu standarde relevante:** - Constructie conform normelor si standardelor	
4.	**Condiţii de garanţie şi postgaranţie:** - Producătorul va garanta calitatea şi buna funcţionare a produsului timp de 24 luni de la punerea în funcţiune sau de 36 luni de la data livrarii. - Produsul va corespunde normelor tehnice şi standardelor europene.	**Condiţii de garanţie şi postgaranţie:** - Producătorul garantează calitatea şi buna funcţionare a produsului timp de 24 luni de la punerea în funcţiune sau de 36 luni de la data livrarii. - Produsul va corespunde normelor tehnice şi standardelor europene.	
5.	**Condiţii cu caracter tehnic:** - Nu vor fi luate în consideraţie decât ofertele însoţite de documentaţie completă pentru selecţie şi montaj în limba română. - Vor fi anexate: • instrucţiuni de montaj (scheme de conectare, broşuri, cataloage); • instrucţiuni de exploatare; • buletine de încercări, verificări, probe; • declaratie de conformitate.	**Condiţii cu caracter tehnic:** - Nu vor fi luate în consideraţie decât ofertele însoţite de documentaţie completă pentru selecţie şi montaj în limba română. - Vor fi anexate: • instrucţiuni de montaj (scheme de conectare, broşuri, cataloage); • instrucţiuni de exploatare; • buletine de încercări, verificări, probe; • declaratie de conformitate.	

*Tabloul odorizator se va monta în minishelter, valorarea sa fiind cuprinsă în instalaţia de odorizare care va respecta fişa tehnică din proiect.

FIŞA TEHNICĂ

MINISHELTER METALIC TERMOIZOLANT
producator TOTALGAZ

Parametrii tehnici şi funcţionali:

Dimensiuni constructive minim: L=2400mm, l=800mm, h=2000mm

Material:

- Cadru: otel vopsit de 1,5mm;
- Usa otel vopsit de 2mm;
- Panouri posterioare, laterale si superioare: otel vopsit de 1,5mm;
- Contrapanou: otel zincat de 3mm;
- Placi inferioare: otel zincat de 1mm;

Cadru: complet sudat la colturi;

Usa: montata cu patru balamale ce permit deschiderea pe stanga sau dreapta;

Panou posterior: fixat cu suruburi. Optiuni standard pentru montarea unei usi posterioare;

Panouri laterale: detasabile fixate in 8 suruburi;

Panou superior: Demontabil. Cu posibilitatea montarii protectiei de ploaie;

Incuietoare: Sistem de inchidere in 4 puncte. Incuietoare standard butuci standard;

Contrapanou: dublu pliat cu glisare in pozitie, reglabil pe adancime;

Pamantare: toate panourile sunt legate la masa prin intermediul fitingurilor de fixare si echipate cu un

bolt de pamantare separat;

Finisaj: Vopsea pudra sstructurata RAL 7035, vopsit in camp electrostatic cu vopsea 100% poliester cu rezistenta pentru mediu agresiv;

Protectie: corespunde cu IP 54, IK 10

Termoizolarea si termostatarea: tote panourile vor fi prevazute cu sistem termoizolant intre folii de aluminiu;

Ventilatie fortata asigurata prin montarea de ventilatoare cu filtru si grile de aer cu filtru cu IP 54 montate pe minishelter Capac frontal fabricat prin injectare plastica rezistent la radiatii UV;

Incalzire anticondens: asigurata de rezistente de incalzire cu ventilator Temperatura maxima de suprafaa: 85°C

Puterea rezistentelor si debitul de aer a ventilatoarelor se va determina cu ajutorul unui program de control termic.

Controlul climatizarii va fi facuta cu un higrotermostat. Durata de viata > 100.000 cicluri

Temperatura de exploatare intre: -20°C - +80°C;

Echipare cu corp de iluminat cu tub LED minim 900lm si intrerupator pe usa;

TGA / TO

Material:

- Cadru: otel vopsit de 1,5mm;
- Placa intrare cabluri: otel de 1,4mm
- Usa otel de 2mm;
- Contrapanou: otel galvanizat de 2mm;

Corp: plat si sudat pe margini; patru orificii pentru fixare pe perete, stantare in exterior, pentru a permite circulatia aerului in partea posterioara;

Usa: montare pe suprafata, cu o deschidere de 130°.

Balamalele demontabile mascate, cu bolt captiv. Etanseitatea este asigurata printr-o garnitura injectata (turnata) dintr-o bucata, extrudata din poliuretan;

Incuietoare: particularizata, cu bac dublu, pentru deschiderea facila a usii.Butuc „dublu-bit" de 3mm si miscare la 90°.

Contrapanou: fixat pe suruburi M8 sudate prin presiune pe partea posterioaraa cofretului;

Protectie: conform minim IP54, IK10

Vopsea pudra structurata RAL 7035.

Echipare minimala:

TGA

UPS automatizare 3000VA - 1buc

Intrerupator instalatie iluminat exterior - 1buc

Intrerupator instalatie de iluminat interior cofret IT -1buc

Centrala incendiu - 1buc

Detector de fum - 1buc

Detector de gaz	- 1buc
Declansator manual	- 1buc
Sirena incendiu	- 1buc
Centrala efractie	- 1buc
Detector efractie	- 1buc
Sirena efractie	- 1buc
NVR	- 1buc
UPS sistem 1500VA-CCTV	- 1buc
Modem transmisie date	- 1buc
Tablou odorizator	- 1buc

ÎN INSOLVENȚĂ * IN INSOLVENCY * EN PROCEDURE COLLECTIVE
J-22-3277-94
TOTALGAZ INDUSTRIE
TEHNIC

Specificaţii de performanţă şi condiţii privind siguranţa în exploatare

Uşile frontale dotate cu sistem de securizare cu cheie;

Uşile frontale se vor deschide la 185°;

Constructie conform normelor si standardelor europene.

Documentaţie în limba română.

FIȘĂ TEHNICĂ E-TGA - Tablou electric general și automatizare pentru SRM-uri

Nr Crt.	Specificațiile tehnice impuse prin Caietul de sarcini	Corespondența propunerii tehnice cu specificațiile tehnice impuse prin Caietul de sarcini	Producător
0	1	2	3
1.	**Parametrii tehnici si functionali:** - Schema tabloului conform desen anexat - Grad de protectie minim: IP54, IK10 - Contrapanou: da - Bară nul lucru: da - Bară nul protecţie: da **Echipare tablou minimală:** - Întreruptor automat 4P 1 buc; - Descărcător 4P cu întreruptor încorporat: 1 buc; - Analizor de reţea: 1 buc; - Distribuitor cu 4 poli: 1 buc; - Întreruptor automat cu protectie diferenţială 3P+N, număr bucăţi conform schemă electrică; - Întreruptor cu protecţie diferenţială 3P+N, număr bucăţi conform schemă electrică; - Întreruptor automat cu protecţie diferenţială 2P, număr bucăţi conform schemă electrică; - Întreruptor automat 2P, număr bucăţi conform schemă electrică; - Intreruptor automat magnetotermic, număr bucăţi conform schemă electrică; - Chei comandă iluminat chei comandă sistem încălzire, număr bucăti conform schemă electrică; - Chei comandă distanţă/local şi automat/manual 2 buc; - Buton oprire de urgenţă 1 buc; - HMI 1 buc; - Surse 24VDC 2 buc; - Modul gestionare surse 24 VDC 1 buc; - PLC pentru automatizări : 1 buc; - Cleme de racord **Note:** - Fiecare întreruptor automat va fi echipat cu contacte de monitorizare a poziţiei şi a declanşării protecţiei. Monitorizarea acestora se va face prin PLC în cadrul programului software implementat. - ln PLC vor fi preluate şi pozitia cheilor de pe uşa tabloului cât şi starea butonului de oprire de urgentă - Se va păstra o rezervă în tabloul electric de 20 % pentru upgradări ulterioare.	**Parametrii tehnici si functionali:** - Schema tabloului conform desen anexat - Grad de protectie minim: IP54, IK10 - Contrapanou: da - Bară nul lucru: da - Bară nul protecţie: da **Echipare tablou minimală:** - Întreruptor automat 4P 1 buc; - Descărcător 4P cu întreruptor încorporat: 1 buc; - Analizor de reţea: 1 buc; - Distribuitor cu 4 poli: 1 buc; - Întreruptor automat cu protectie diferenţială 3P+N, număr bucăţi conform schemă electrică; - Întreruptor cu protecţie diferenţială 3P+N, număr bucăţi conform schemă electrică; - Întreruptor automat cu protecţie diferenţială 2P, număr bucăţi conform schemă electrică; - Întreruptor automat 2P, număr bucăţi conform schemă electrică; - Intreruptor automat magnetotermic, număr bucăţi conform schemă electrică; - Chei comandă iluminat chei comandă sistem încălzire, număr bucăti conform schemă electrică; - Chei comandă distanţă/local şi automat/manual 2 buc; - Buton oprire de urgenţă 1 buc; - HMI 1 buc; - Surse 24VDC 2 buc; - Modul gestionare surse 24 VDC 1 buc; - PLC pentru automatizări : 1 buc; - Cleme de racord **Note:** - Fiecare întreruptor automat va fi echipat cu contacte de monitorizare a poziţiei şi a declanşării protecţiei. Monitorizarea acestora se va face prin PLC în cadrul programului software implementat. - ln PLC vor fi preluate şi pozitia cheilor de pe uşa tabloului cât şi starea butonului de oprire de urgentă - Se va păstra o rezervă în tabloul electric de 20 % pentru upgradări ulterioare.	**ELDON** **SCHNEIDER** **SCHNEIDER** **WEIMUELLER** **SCHNEIDER** **SCHNEIDER** **SCHNEIDER** **SCHNEIDER** **SCHNEIDER** **SCHNEIDER** **SCHNEIDER** **SCHNEIDER** **SCHNEIDER** **SCHNEIDER** **PHOENIX** **PHOENIX** **SCHNEIDER** **PHOENIX**

	- Toate rezervele atât de circuite electrice cât şi de intrări/ieşiri digitale si analogice din PLC vor fi cablate in sirul de cleme.	- Toate rezervele atât de circuite electrice cât şi de intrări/ieşiri digitale si analogice din PLC vor fi cablate in sirul de cleme.	
2.	**Specificaţii de performanţă şi condiţii privind siguranta în exploatare:** - Conform Caietului de Sarcini;	**Specificaţii de performanţă şi condiţii privind siguranta în exploatare:** - Conform Caietului de Sarcini;	
3.	**Conditii privind conformitatea cu standarde relevante:** - normele fabricantului trebuie să fie echivalente şi nu doar corespunzătoare cu unul din standardele ISO, ANSI, IEC, DIN	**Conditii privind conformitatea cu standarde relevante:** - normele fabricantului trebuie să fie echivalente şi nu doar corespunzătoare cu unul din standardele ISO, ANSI, IEC, DIN	
4.	**Condiţii de garanţie şi postgaranţie:** - Producătorul va garanta calitatea şi buna funcţionare a produsului timp de 24 luni de la punerea în funcţiune sau de 36 luni de la data livrarii. - Produsul va corespunde normelor tehnice şi standardelor europene.	**Condiţii de garanţie şi postgaranţie:** - Producătorul garantează calitatea şi buna funcţionare a produsului timp de 24 luni de la punerea în funcţiune sau de 36 luni de la data livrarii. - Produsul va corespunde normelor tehnice şi standardelor europene.	
5.	**Condiţii cu caracter tehnic:** - Nu vor fi luate în consideraţie decât ofertele însoţite de documentaţie completă pentru selecţie şi montaj în limba română. - Vor li anexate: • instrucţiuni de montaj (scheme de conectare, broşuri, cataloage); • instrucţiuni de exploatare; • buletine de încercări, verificări, probe; • declaratie de conformitate.	**Condiţii cu caracter tehnic:** - Nu vor fi luate în consideraţie decât ofertele însoţite de documentaţie completă pentru selecţie şi montaj în limba română. - Vor li anexate: • instrucţiuni de montaj (scheme de conectare, broşuri, cataloage); • instrucţiuni de exploatare; • buletine de încercări, verificări, probe; • declaratie de conformitate.	

MKS

Versiunea compactă, uşă simplă

CONNECT AND PROTECT

IP 55 | TYPE 12 | IK 10

Gama de dulapuri industriale compacte din oţel cu conţinut redus de carbon cu uşă simplă MKS, cu grad de protecţie IP 55, conţine produse de stoc disponibile în mai multe dimensiuni diferite. Această gamă de dulapuri industriale este bine adecvată pentru numeroase aplicaţii diferite. Riscul de defectare a componentelor şi, cu acesta, perioadele inutile de nefuncţionare sunt eliminate, deoarece apa şi praful sunt împiedicate să intre în dulap.

Material: Corpul dulapului: oţel vopsit de 1.35 mm. Panourile posterior şi superior: oţel vopsit de 1.5 mm. Uşa: Oţel vopsit de 2 mm. Contrapanou: oţel zincat de 3 mm. Plăci inferioare: oţel zincat de 1 mm.

Corp: Cadru din tablă pliată de patru ori şi sudată pe margini. Tipar de orificii pe două rânduri integrat ce permite ajustarea poziţiei în adâncime a contrapanoului.

Uşă: Montată cu balamale pentru a permite deschiderea pe stânga sau pe dreapta. Include cadrul de uşă cu tipar de orificii de 25 mm.

Panou posterior: Fixat cu şuruburi Torx M6. Opţiuni standard pentru montarea unei uşi posterioare.

Panou superior: Demontabil.

Încuietoare: Sistem de închidere Espagnolette în 4 puncte extern. Nu interferează cu spaţiul interior al dulapului. Încuietoare standard double-bit de 3 mm. Poate fi schimbată cu butuci standard sau Euro-cilindru şi mâner pivotant.

Plăci inferioare: Compuse din trei piese.

Contrapanou: Dublu pliat cu glisare în poziţie. Reglabil pe adâncime în trepte de 25 mm cu accesoriu MPD02. Ataşată în exteriorul dulapului.

Împământare: Toate panourile sunt legate la masă prin intermediul fitingurilor de fixare şi sunt echipate cu bolţ de împământare separat.

Finisaj: Vopsea pudră structurată, RAL 7035.

Protecţie: Corespunde cu IP 55 | TYPE 12 | IK 10.

Livrare: Corp cu uşă montată, panou posterior, panou superior, plăci inferioare, contrapanou şi cadru de uşă (cu excepţia versiunii PE). Livrarea include de asemenea bolţuri de împământare. Se livrează pe un palet cu aceeaşi lăţime ca şi dulapul. Toate materialele de ambalare sunt reciclabile.

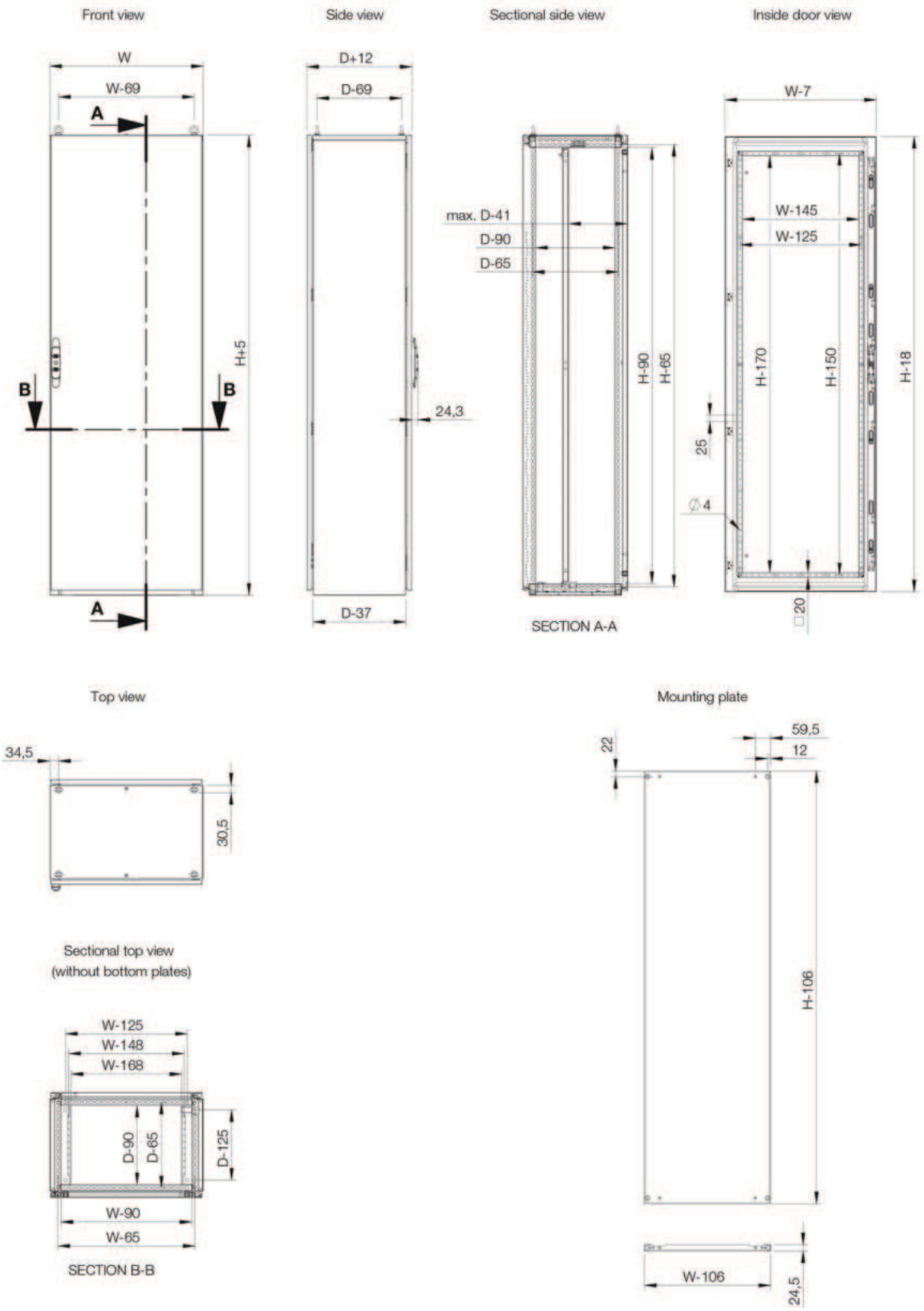
Front view
W
W-69
A
B
B
A
H-5
Side view
D+12
D-69
24,3
D-37
Sectional side view
max. D-41
D-90
D-65
H-90
H-65
SECTION A-A
Inside door view
W-7
W-145
W-125
H-170
H-150
H-18
25
∅4
□20
Top view
34,5
30,5
Sectional top view
(without bottom plates)
W-125
W-148
W-168
D-90
D-65
D-125
W-90
W-65
SECTION B-B
Mounting plate
22
59,5
12
H-106
W-106
24,5

Contrapanou inclus

Î	L	A	î	l	a	Nr. articol
1200	600	400	1094	494	359	MKS12064R5
1200	800	400	1094	694	359	MKS12084R5
1400	600	300	1294	494	259	MKS14063R5
1400	600	400	1294	494	359	MKS14064R5
1400	800	300	1294	694	259	MKS14083R5
1400	800	400	1294	694	359	MKS14084R5
1600	600	300	1494	494	259	MKS16063R5
1600	600	400	1494	494	359	MKS16064R5
1600	800	300	1494	694	259	MKS16083R5
1600	800	400	1494	694	359	MKS16084R5
1600	800	500	1494	694	459	MKS16085R5
1600	1000	400	1494	894	359	MKS16104R5
1600	1000	500	1494	894	459	MKS16105R5
1800	600	400	1694	494	359	MKS18064R5
1800	800	400	1694	694	359	MKS18084R5
1800	800	500	1694	694	459	MKS18085R5
1800	1000	400	1694	894	359	MKS18104R5
2000	600	400	1894	494	359	MKS20064R5
2000	800	400	1894	694	359	MKS20084R5
2000	800	500	1894	694	459	MKS20085R5
2000	1000	400	1894	894	359	MKS20104R5
2000	1000	500	1894	894	459	MKS20105R5

Fără contrapanou

Î	L	A	Nr. articol
1200	600	400	MKS12064PER5
1200	800	400	MKS12084PER5
1400	600	300	MKS14063PER5
1400	600	400	MKS14064PER5
1400	800	300	MKS14083PER5
1400	800	400	MKS14084PER5
1600	600	300	MKS16063PER5
1600	600	400	MKS16064PER5
1600	800	300	MKS16083PER5
1600	800	400	MKS16084PER5
1600	800	500	MKS16085PER5
1600	1000	400	MKS16104PER5
1600	1000	500	MKS16105PER5
1800	600	400	MKS18064PER5
1800	800	400	MKS18084PER5
1800	800	500	MKS18085PER5
1800	1000	400	MKS18104PER5
2000	600	400	MKS20064PER5
2000	800	400	MKS20084PER5
2000	800	500	MKS20085PER5
2000	1000	400	MKS20104PER5
2000	1000	500	MKS20105PER5

Pentru opţiuni suplimentare pentru cabluri adăugaţi plintele PF şi PCP.

FISA TEHNICA E-IA
Intreruptor automat general

Nr Crt.	Specificațiile tehnice impuse prin Caietul de sarcini	Corespondența propunerii tehnice cu specificațiile tehnice impuse prin Caietul de sarcini	Producător
0	1	2	3
1.	**Parametri tehnici si funcționali:** - Număr poli: 4; - Montaj pe contrapanou Prevăzut cu manetă de acţionare montată pe uşa TGA şi blocabilă pe poziţia 0; Posibilitate de deschidere uşă TGA cu întreruptorul cuplat; - Curent nominal: 25A; - Capacitatea de rupere: minim 25 kA, - Tensiune nominala: 400V; 50/60Hz-AC; - Bobina de acționare tip șunt; - Tensiune de izolare 690Vca - Tensiune de tinere la impuls minim 6kV - Declanșator reglabil la suprasarcina Ir(0,8-1xln) - Condiții de funcționare: Fără declasare pana la 50 grade; - Contacte de semnalizare defect; - Contact semnalizare Închis/deschis; - Domeniu de temperatura: -25 ...+70 grade Celsius - Terminale: Clema tip brida; - Durata de viata mecanica:minim 20.000 manevre; - Durata de viata electrica: minim 10.000 manevre; - Grad de protecție minim IP40 - Protecția circuitelor Împotriva curenților de scurtcircuit; - Protecția circuitelor Împotriva curenților de suprasarcina;	**Parametri tehnici si funcționali:** - Număr poli: 4; - Montaj pe contrapanou Prevăzut cu manetă de acţionare montată pe uşa TGA şi blocabilă pe poziţia 0; Posibilitate de deschidere uşă TGA cu întreruptorul cuplat; - Curent nominal: 25A; - Capacitatea de rupere: minim 25 kA, - Tensiune nominala: 400V; 50/60Hz-AC; - Bobina de acționare tip șunt; - Tensiune de izolare 690Vca - Tensiune de tinere la impuls 6kV - Declanșator reglabil la suprasarcina Ir(0,8-1xln) - Condiții de funcționare: Fără declasare pana la 50 grade; - Contacte de semnalizare defect; - Contact semnalizare Închis/deschis; - Domeniu de temperatura: -25...+70 grade Celsius - Terminale: Clema tip brida; - Durata de viata mecanica: 20.000 manevre; - Durata de viata electrica: 10.000 manevre; - Grad de protecție minim IP40 - Protecția circuitelor Împotriva curenților de scurtcircuit; Protecția circuitelor Împotriva curenților de suprasarcina;	SCHNEIDER
2.	**Specificaţii de performanţă şi condiţii privind siguranta în exploatare:** - Borne sus și jos cu cap fix și bridă culisantă: - Protecția terminalelor la atingere cu mana. - Asigurarea izolaţiei între contacte în poziţia O conform IEC 60947-2; - Carcasa din material ABS; - Parte frontala clasa 2.	**Specificaţii de performanţă şi condiţii privind siguranta în exploatare:** - Borne sus și jos cu cap fix și bridă culisantă: - Protecția terminalelor la atingere cu mana. - Asigurarea izolaţiei între contacte în poziţia O conform IEC 60947-2; - Carcasa din material ABS; Parte frontala clasa 2.	

3.	**Conditii privind conformitatea cu standarde relevante:** - SR EN 60898-1 - SR EN 60947-2; - SRE EN 60529.	**Conditii privind conformitatea cu standarde relevante:** - SR EN 60898-1 - SR EN 60947-2; SRE EN 60529.	
4.	**Condiţii de garanţie şi postgaranţie:** - Producătorul va garanta calitatea şi buna funcţionare a produsului timp de 24 luni de la punerea în funcţiune sau de 36 luni de la data livrarii. - Produsul va corespunde normelor tehnice şi standardelor europene.	**Condiţii de garanţie şi postgaranţie:** - Producătorul va garanta calitatea şi buna funcţionare a produsului timp de 24 luni de la punerea în funcţiune sau de 36 luni de la data livrarii. - Produsul va corespunde normelor tehnice şi standardelor europene.	
5.	**Condiţii cu caracter tehnic:** - Nu vor fi luate în consideraţie decât ofertele însoţite de documentaţie completă pentru selecţie şi montaj în limba română. - Vor li anexate: • instrucţiuni de montaj (scheme de conectare, broşuri, cataloage); • instrucţiuni de exploatare; • buletine de încercări, verificări, probe; • declaratie de conformitate.	**Condiţii cu caracter tehnic:** - Nu vor fi luate în consideraţie decât ofertele însoţite de documentaţie completă pentru selecţie şi montaj în limba română. - Vor li anexate: • instrucţiuni de montaj (scheme de conectare, broşuri, cataloage); • instrucţiuni de exploatare; • buletine de încercări, verificări, probe; • declaratie de conformitate.	

Fişă tehnică produs

Specificatii

Intreruptor ComPacT NSX100B, 25 kA la 415 VAC 50/60 Hz, 100A, fara unitate de declansare, 4 poli

C10B4

Principal

Gama	ComPacT noua generatie
nume produs	ComPacT NSX noua generatie
nume scurt al dispozitivului	NSX100B
Tip produs sau componenta	Cadru de baza
aplicatie a dispozitivului	Distributie
descriere poli	4P
pozitie neutrului	Stanga
[In] curent nominal	100 A la 40 °C
[Ue] tensiune nominala de functionare	690 V c.a. 50/60 Hz conformitate cu SR EN 60947-2
Tip retea electrica	C.a.
frecventa retea electrica	50/60 Hz
adecvare pentru izolatie	Da conformitate cu SR EN 60947-2
categorie de utilizare	Categoria A
[Icu] capacitate nominala limita de rupere la scurtcircuit	15 kA Icu la 500 V c.a. 50/60 Hz conformitate cu SR EN 60947-2 20 kA Icu la 440 V c.a. 50/60 Hz conformitate cu SR EN 60947-2 25 kA Icu la 380/415 V c.a. 50/60 Hz conformitate cu SR EN 60947-2 40 kA Icu la 220/240 V c.a. 50/60 Hz conformitate cu SR EN 60947-2
Nivel de performanta	B 25 kA 415 V c.a.
tip de control	Comutare
mod de montare	Fix

Suplimentar

[Ui] tensiune nominala de izolatie	800 V c.a. 50/60 Hz conformitate cu SR EN 60947-2
[Uimp] tensiune nominala de tinere la impuls	8 kV conformitate cu SR EN 60947-2
[Ics] capacitate nominala de serviciu de rupere la scurtcircuit	20 kA la 440 V c.a. 50/60 Hz conformitate cu SR EN 60947-2 25 kA la 380/415 V c.a. 50/60 Hz conformitate cu SR EN 60947-2 40 kA la 220/240 V c.a. 50/60 Hz conformitate cu SR EN 60947-2 7,5 kA la 500 V c.a. 50/60 Hz conformitate cu SR EN 60947-2
durabilitate mecanica	50000 cic conformitate cu SR EN 60947-2
durabilitate electrica	10000 cic 690 V c.a. 50/60 Hz In conformitate cu SR EN 60947-2 20000 cic 690 V c.a. 50/60 Hz In/2 conformitate cu SR EN 60947-2 30000 cic 440 V c.a. 50/60 Hz In conformitate cu SR EN 60947-2 50000 cic 440 V c.a. 50/60 Hz In/2 conformitate cu SR EN 60947-2
suport de montare	Placa dorsala
conexiune superioara	Fata

conexiune inferioara	Fata
pasul conexiunii	35 mm
tip de protectie	Fără protecție
Latime	140 mm
Inaltime	161 mm
Adancime	86 mm

Mediu

standarde	SR EN 60947-2 UL 60947-4-1
grad de poluare	3 conformitate cu SR EN 60664-1
grad de protectie IP	IP40 conforming to SR EN 60529
grad de protectie IK	IK07 conforming to IEC 62262
temperatura ambientala de functionare	-25…70 °C
temperatura ambietala pentru depozitare	-50…85 °C

Unitati de ambalare

Unitate de masura pentru prima forma de impachetare	PCE
Numar unitati in prima forma de impachetare	1
Inaltime prima forma de impachetare	14,400 cm
Latime prima forma de impachetare	14,800 cm
Lungime prima forma de impachetare	19,200 cm
Greutate prima forma de impachetare	1,893 kg
Unitate de masura pentru a doua forma de impachetare	S03
Numar unitati in a doua forma de impachetare	6
Inaltime a doua forma de impachetare	30,000 cm
Latime a doua forma de impachetare	30,000 cm
Lungime a doua forma de impachetare	40,000 cm
Greutate a doua forma de impachetare	11,740 kg
Unitate de masura pentru a treia forma de impachetare	P12
Numar unitati in a treia forma de impachetare	48
Inaltime a treia forma de impachetare	42,500 cm
Latime a treia forma de impachetare	80,000 cm
Lungime a treia forma de impachetare	120,000 cm
Greutate a treia forma de impachetare	106,500 kg

Garantie contractuala

Garantie	18 luni

Sustenabilitate

Eticheta **Green Premium™** reprezinta angajamentul Schneider Electric de a livra produse cu cea mai buna performanta de mediu din clasa lor. Green Premium promite respectarea celor mai recente reglementari, transparenta in ceea ce priveste impactul asupra mediului, precum si produse circulare si cu emisii reduse de CO_2.

Ghidul pentru evaluarea sustenabilitatii produsului este un ghid care clarifica standardele globale de eticheta ecologica si modul de interpretare a declaratiilor de mediu.

Ghid pentru evaluarea sustenabilitatii unui produs >

Transparenta RoHS/REACh

Echipament sustenabil

Fara Mercur

Informatii Privind Scutirea De La Rohs Da

Certificari si standarde

Regulamentul Reach	Declaratia REACH
Directiva Rohs Ue	Conform cu anumite exceptii
Regulamentul Rohs China	Declaratia RoHS China Produs in afara domeniului de aplicare a RoHS China. Declaratia privind substantele in scop informativ.
Raport De Mediu	Profilul ambiental al produsului
Profil Circularitate	Informatii privind sfarsitul duratei de viata

Offer Marketing Illustration

Product benefits / Features

Offer Marketing Illustration

Product benefits / Features

Offer Marketing Illustration

Product benefits / Features

Fişă tehnică produs

Specificatii

Unitate de declansare MicroLogic 2.2 pentru intreruptoare ComPacT NSX 100/160/250, electronica, 40A, 4 poli 4d

C1042D040

Principal

Gama	ComPacT noua generatie
gama de produse	ComPacT NSX100...250 noua generatie
Tip produs sau componenta	Unitate de declansare
nume unitate de declansare	Micrologic 2.2
tehnologie unitate de declansare	Electronic
Compatibilitate gama	ComPacT noua generatie NSX100 ComPacT noua generatie NSX160 ComPacT noua generatie NSX250
aplicatie a dispozitivului	Distributie
descriere poli	4P
descriere poli protejati	3d + N/2 4d 3d
pozitie neutrului	Stanga
functii de protectie a unitatii de declansare	LSoI
tip de protectie	L : for protectie la suprasarcina (timpindelungat) So : for protectie la scurtcircuit de scurta durata cu intarziere fixa I : for protectie instantanee la scurtcircuit
Ratingul unitatii de declansare	40 A la 40 °C
[Ue] tensiune nominala de functionare	690 V c.a. 50/60 Hz
Tip retea electrica	C.a.
frecventa retea electrica	50/60 Hz
Modul de montare a intreruptorului	Fix

Suplimentar

Tip de reglare a preluarii de lunga durata Ir (pretectie termica)	9 setari reglabile
[Ir] interval de reglare a restabilirii pe termen lung	18...40 A
Tip de reglare a intarzierii de lunga durata tr	Fix
[tr] reglarea intarzierii de lunga durata	11 s la 7.2 x Ir 16 s la 6 x Ir 400 s la 1.5 x Ir
Setarea protectiei neutrului	0,5 x Ir (3d + N/2) 1 x Ir (4d) Fara protectie (3d)
memorie termica	20 de minuteinainte si dupa declansare

Reglarea preluarii protectiei de scurta durata tip Isd	9 setari reglabile
[Isd] interval de reglare a restabilirii pe termen scurt	1,5...10 x Ir
Reglarea intarzierii protectiei de scurta durata tip tsd	Fix
Ajustarea protectiei instantanee tip Ii	Fix
[Ii] interval de reglare a restabilirii instantanee	600 A
protectie de scurgere la pamant	Fara
blocare ZSI cu selectare a zonei	Fara
semnalizare locala	Pentrugata de funcţionare LED intermitent (verde) Pentrusuprasarcină LED 105 % Ir (rosu) Pentrusuprasarcină LED 90 % Ir (portocaliu)

Mediu

standarde	SR EN 60947-2
clasa de protectie la electrocutare	Clasa II
grad de poluare	3 conformitate cu IEC 60947-1
grad de protectie IP	IP40 conforming to SR EN 60529
temperatura ambientala de functionare	-25…70 °C
temperatura ambietala pentru depozitare	-50…85 °C

Unitati de ambalare

Unitate de masura pentru prima forma de impachetare	PCE
Numar unitati in prima forma de impachetare	1
Inaltime prima forma de impachetare	6,5 cm
Latime prima forma de impachetare	9,5 cm
Lungime prima forma de impachetare	15,0 cm
Greutate prima forma de impachetare	576,0 g
Unitate de masura pentru a doua forma de impachetare	S03
Numar unitati in a doua forma de impachetare	18
Inaltime a doua forma de impachetare	30,0 cm
Latime a doua forma de impachetare	30,0 cm
Lungime a doua forma de impachetare	40,0 cm
Greutate a doua forma de impachetare	10,828 kg

Garantie contractuala

Garantie	18 luni

Sustenabilitate

Eticheta **Green Premium™** reprezinta angajamentul Schneider Electric de a livra produse cu cea mai buna performanta de mediu din clasa lor. Green Premium promite respectarea celor mai recente reglementari, transparenta in ceea ce priveste impactul asupra mediului, precum si produse circulare si cu emisii reduse de CO_2.

Ghidul pentru evaluarea sustenabilitatii produsului este un ghid care clarifica standardele globale de eticheta ecologica si modul de interpretare a declaratiilor de mediu.

Ghid pentru evaluarea sustenabilitatii unui produs >

Transparenta RoHS/REACh

Echipament sustenabil

Fara Mercur

Informatii Privind Scutirea De La Rohs Da

Certificari si standarde

Regulamentul Reach	Declaratia REACH
Directiva Rohs Ue	Conform cu anumite exceptii
Regulamentul Rohs China	Declaratia RoHS China Produs in afara domeniului de aplicare a RoHS China. Declaratia privind substantele in scop informativ.
Raport De Mediu	Profilul ambiental al produsului
Profil Circularitate	Informatii privind sfarsitul duratei de viata

Fişă tehnică produs

Specificatii

Contact auxiliar - 1 OC sau 1 SD sau 1 SDE sau 1 SDV

29450

Principal

Tip produs sau componenta	Contact auxiliar
nume scurt al dispozitivului	OF SD SDE SDV
aplicatie a dispozitivului	Breaker status monitoring
Compatibilitate gama	Compact (ComPact NS630b...1600) Compact (ComPact NS1600b...3200) Compact (Compact INS) Compact (Compact INV) Compact (ComPact NSX) Easypact (EasyPact CVS) PowerPact (PowerPact Multistandard) Compact (ComPact NSX DC)
compozitie contacte de semnalizare	1 NO/NC

Suplimentar

tip eroare	Defect electric general
semnalizare locala	Pentruopen/close indicatie ON/OFF Pentruindicator declansare releu indicator declanşare Pentruelectrical fault declansare defectiune
tip contacte auxiliare	Standard
mod de montare	Clipsabil
[Ith] curent termic conventional in aer liber	5 A
Breaking capacity (A)	AC-12: 6 A at 24 V c.a. 50/60 Hz AC-12: 6 A at 48 V c.a. 50/60 Hz AC-12: 6 A at 110 V c.a. 50/60 Hz AC-12: 6 A at 220/240 V c.a. 50/60 Hz AC-12: 6 A at 380/440 V c.a. 50/60 Hz AC-12: 6 A at 480 V c.a. 50/60 Hz AC-12: 6 A at 660/690 V c.a. 50/60 Hz AC-15: 6 A at 24 V c.a. 50/60 Hz AC-15: 6 A at 48 V c.a. 50/60 Hz AC-15: 5 A at 110 V c.a. 50/60 Hz AC-15: 4 A at 220/240 V c.a. 50/60 Hz AC-15: 2 A at 380/440 V c.a. 50/60 Hz AC-15: 1,5 A at 480 V c.a. 50/60 Hz AC-15: 0,1 A at 660/690 V c.a. 50/60 Hz DC-12: 6 A at 24 V c.c. 50/60 Hz DC-12: 2,5 A at 48 V c.c. 50/60 Hz DC-12: 0,6 A at 110 V c.c. 50/60 Hz DC-12: 0,3 A at 250 V c.c. 50/60 Hz DC-14: 1 A at 24 V c.c. 50/60 Hz DC-14: 0,2 A at 48 V c.c. DC-14: 0,05 A at 110 V c.c. DC-14: 0,03 A at 250 V c.c.
sarcina minima	100 mA la 24 V c.c.

terminal auxiliar de conectare	arc 0,5…1,5 mm² (AWG 20...AWG 16)
categoria accesorii/piese separate	Piese de schimb pentru Compact NS630b...1600 Piese de schimb pentru Compact NS1600b...3200

Unitati de ambalare

Unitate de masura pentru prima forma de impachetare	PCE
Numar unitati in prima forma de impachetare	1
Inaltime prima forma de impachetare	1,400 cm
Latime prima forma de impachetare	7,000 cm
Lungime prima forma de impachetare	7,000 cm
Greutate prima forma de impachetare	16,900 g
Unitate de masura pentru a doua forma de impachetare	BB1
Numar unitati in a doua forma de impachetare	10
Inaltime a doua forma de impachetare	4,500 cm
Latime a doua forma de impachetare	16,000 cm
Lungime a doua forma de impachetare	16,000 cm
Greutate a doua forma de impachetare	177,000 g
Unitate de masura pentru a treia forma de impachetare	S03
Numar unitati in a treia forma de impachetare	300
Inaltime a treia forma de impachetare	30,000 cm
Latime a treia forma de impachetare	30,000 cm
Lungime a treia forma de impachetare	40,000 cm
Greutate a treia forma de impachetare	5,785 kg

Garantie contractuala

Garantie	18 months

Sustenabilitate

Eticheta **Green Premium™** reprezinta angajamentul Schneider Electric de a livra produse cu cea mai buna performanta de mediu din clasa lor. Green Premium promite respectarea celor mai recente reglementari, transparenta in ceea ce priveste impactul asupra mediului, precum si produse circulare si cu emisii reduse de CO_2.

Ghidul pentru evaluarea sustenabilitatii produsului este un ghid care clarifica standardele globale de eticheta ecologica si modul de interpretare a declaratiilor de mediu.

Ghid pentru evaluarea sustenabilitatii unui produs >

Transparenta RoHS/REACh

Echipament sustenabil

- Conform Reach Fara Svhc
- Fara Metale Grele Toxice
- Fara Mercur
- Informatii Privind Scutirea De La Rohs Da
- Fara Pvc
- Produs Cu Piese Din Plastic Fara Halogen

Certificari si standarde

Regulamentul Reach	Declaratia REACH
Directiva Rohs Ue	Conform Declaratia RoHS UE
Regulamentul Rohs China	Declaratia RoHS China Declaratia proactiva RoHS China (in afara domeniului de aplicare a RoHS China)
Raport De Mediu	Profilul ambiental al produsului
Weee	În Uniunea Europeana, produsele trebuie reciclate respectand sistemul specific de colectare a deseurilor si nu trebuie sa ajunga in pubelele de colectare a deseurilor menajere.
Profil Circularitate	Nu sunt necesare operatii de reciclare speciale

Fişă tehnică produs

Specificatii

Maner rotativ prelungit, ComPacT NSX 100/160/250, negru, arbore telescopic de la 248 la 600 mm pt. dispozitiv retractabil, IP55

LV429343T

Principal

gama de produse	ComPacT NSX100...250 noua generatie
Tip produs sau componenta	Manetă rotativă
Compatibilitate gama	ComPacT noua generatie NSX100...250
tip de accesorii / piese separate	Accesorii de comanda
culoare maner	Negru
culoare placa frontala maner	Negru
stil de montare maner rotativ	Telescopic

Suplimentar

blocare cu lacat pentru maner rotativ	Intre 1 si 3 lacate
locatie de montare maner rotativ	Fata

Mediu

grad de protectie IP	IP55

Unitati de ambalare

Unitate de masura pentru prima forma de impachetare	PCE
Numar unitati in prima forma de impachetare	1
Inaltime prima forma de impachetare	10,0 cm
Latime prima forma de impachetare	10,3 cm
Lungime prima forma de impachetare	48,5 cm
Greutate prima forma de impachetare	722,0 g
Unitate de masura pentru a doua forma de impachetare	S04
Numar unitati in a doua forma de impachetare	6
Inaltime a doua forma de impachetare	30 cm
Latime a doua forma de impachetare	40 cm
Lungime a doua forma de impachetare	60 cm
Greutate a doua forma de impachetare	5,074 kg

Garantie contractuala

Garantie	18 luni

Sustenabilitate

Eticheta **Green Premium™** reprezinta angajamentul Schneider Electric de a livra produse cu cea mai buna performanta de mediu din clasa lor. Green Premium promite respectarea celor mai recente reglementari, transparenta in ceea ce priveste impactul asupra mediului, precum si produse circulare si cu emisii reduse de CO_2.

Ghidul pentru evaluarea sustenabilitatii produsului este un ghid care clarifica standardele globale de eticheta ecologica si modul de interpretare a declaratiilor de mediu.

Ghid pentru evaluarea sustenabilitatii unui produs >

Transparenta RoHS/REACh

Echipament sustenabil

- Fara Mercur
- Informatii Privind Scutirea De La Rohs Da
- Produs Cu Piese Din Plastic Fara Halogen

Certificari si standarde

Regulamentul Reach	Declaratia REACH
Directiva Rohs Ue	Conform cu anumite exceptii
Regulamentul Rohs China	Declaratia RoHS China Produs in afara domeniului de aplicare a RoHS China. Declaratia privind substantele in scop informativ.
Raport De Mediu	Profilul ambiental al produsului
Profil Circularitate	Informatii privind sfarsitul duratei de viata

Fişă tehnică produs

Specificatii

Bobine De Declansare De Tensiune Mx - 24 V C.C.

LV429390

Principal

Gama	ComPacT
gama de produse	ComPact NSX100...250 ComPacT NSX100...250 noua generatie ComPact NSX400...630 ComPacT NSX400...630 noua generatie ComPact NSX100...250 DC ComPacT NSX100...250 CC noua generatie ComPact NSX100...250 DC PV ComPacT NSX100...250 CC PV noua generatie ComPact NSX400...630 DC ComPacT NSX400...630 CC noua generatie ComPact NSX400...630 DC PV ComPacT NSX400...630 CC PV noua generatie
nume scurt al dispozitivului	MX
Tip produs sau componenta	Declansare la tensiune
aplicatie a dispozitivului	Control
tip tensiune declansare	Bobina de deschidere Activare declansare prin bobina de derivatie
tensiune circuit de comanda	24 V c.c.
Compatibilitate gama	ComPacT noua generatie (ComPacT NSX noua generatie) ComPacT noua generatie (ComPacT NSX CC noua generatie) Compact (ComPact NSX) Compact (ComPact NSX DC) Easypact (EasyPact CVS) PowerPact (PowerPact Multistandard)

Suplimentar

Operating threshold	0.7...1.1 x Un deschidere
timp de raspuns	50 ms
tip semnal de control	Impuls Comandă meţtinută
durata impulsului	>= 20 ms
putere de pornire a alimentarii	10 W
terminal auxiliar de conectare	arc 0,5…1,5 mm² (AWG 20...AWG 16)
lungimea de dezizolare a cablului	7 mm

Unitati de ambalare

Unitate de masura pentru prima forma de impachetare	PCE
Numar unitati in prima forma de impachetare	1
Inaltime prima forma de impachetare	4,500 cm

Latime prima forma de impachetare	4,700 cm
Lungime prima forma de impachetare	6,300 cm
Greutate prima forma de impachetare	116,000 g
Unitate de masura pentru a doua forma de impachetare	BB1
Numar unitati in a doua forma de impachetare	10
Inaltime a doua forma de impachetare	7,300 cm
Latime a doua forma de impachetare	10,800 cm
Lungime a doua forma de impachetare	24,800 cm
Greutate a doua forma de impachetare	1,208 kg
Unitate de masura pentru a treia forma de impachetare	S03
Numar unitati in a treia forma de impachetare	60
Inaltime a treia forma de impachetare	30,000 cm
Latime a treia forma de impachetare	30,000 cm
Lungime a treia forma de impachetare	40,000 cm
Greutate a treia forma de impachetare	7,628 kg

Garantie contractuala

Garantie	18 months

Sustenabilitate

Eticheta **Green Premium™** reprezinta angajamentul Schneider Electric de a livra produse cu cea mai buna performanta de mediu din clasa lor. Green Premium promite respectarea celor mai recente reglementari, transparenta in ceea ce priveste impactul asupra mediului, precum si produse circulare si cu emisii reduse de CO_2.

Ghidul pentru evaluarea sustenabilitatii produsului este un ghid care clarifica standardele globale de eticheta ecologica si modul de interpretare a declaratiilor de mediu.

Ghid pentru evaluarea sustenabilitatii unui produs >

Transparenta RoHS/REACh

Echipament sustenabil

- Fara Mercur
- Informatii Privind Scutirea De La Rohs Da
- Fara Pvc

Certificari si standarde

Regulamentul Reach	Declaratia REACH
Directiva Rohs Ue	Conform cu anumite exceptii
Regulamentul Rohs China	Declaratia RoHS China Produs in afara domeniului de aplicare a RoHS China. Declaratia privind substantele in scop informativ.
Raport De Mediu	Profilul ambiental al produsului
Weee	În Uniunea Europeana, produsele trebuie reciclate respectand sistemul specific de colectare a deseurilor si nu trebuie sa ajunga in pubelele de colectare a deseurilor menajere.
Profil Circularitate	Nu sunt necesare operatii de reciclare speciale

Fişă tehnică produs

Specificatii

Capace Borne Scurte, 4 Poli, Pentru Ins40, 250/Inv100, 250/Nsx100, 250

LV429516

Principal

Tip produs sau componenta	Short terminal shield
Compatibilitate gama	ComPacT noua generatie (ComPacT NSX100 noua generatie) ComPacT noua generatie (ComPacT NSX160 noua generatie) ComPacT noua generatie (ComPacT NSX250 noua generatie) Compact (ComPact NSX100) Compact (ComPact NSX160) Compact (ComPact NSX250) ComPacT noua generatie (ComPacT NSX CC noua generatie) NSX100 cc ComPacT noua generatie (ComPacT NSX CC noua generatie) NSX160 cc ComPacT noua generatie (ComPacT NSX CC noua generatie) NSX250 cc Compact Compact NSX100 DC Compact Compact NSX160 DC Compact Compact NSX250 DC Easypact (EasyPact CVS100) Easypact (EasyPact CVS160) Easypact (EasyPact CVS250)
tip de accesorii / piese separate	Accesorii de izolare
descriere poli	4P
Cantitate pe set	1

Suplimentar

pasul conexiunii	35 mm
grad de protectie IP	IP40 conforming to SR EN 60529
Compatibilitate produs	Circuit-breaker Plug-in base

Unitati de ambalare

Unitate de masura pentru prima forma de impachetare	PCE
Numar unitati in prima forma de impachetare	1
Inaltime prima forma de impachetare	3,500 cm
Latime prima forma de impachetare	15,800 cm
Lungime prima forma de impachetare	16,500 cm
Greutate prima forma de impachetare	73,500 g
Unitate de masura pentru a doua forma de impachetare	S04
Numar unitati in a doua forma de impachetare	40
Inaltime a doua forma de impachetare	30,000 cm
Latime a doua forma de impachetare	40,000 cm

Lungime a doua forma de impachetare	60,000 cm
Greutate a doua forma de impachetare	3,842 kg
Unitate de masura pentru a treia forma de impachetare	P12
Numar unitati in a treia forma de impachetare	160
Inaltime a treia forma de impachetare	50,000 cm
Latime a treia forma de impachetare	80,000 cm
Lungime a treia forma de impachetare	120,000 cm
Greutate a treia forma de impachetare	27,368 kg

Garantie contractuala

Garantie	18 months

Sustenabilitate

Eticheta **Green Premium™** reprezinta angajamentul Schneider Electric de a livra produse cu cea mai buna performanta de mediu din clasa lor. Green Premium promite respectarea celor mai recente reglementari, transparenta in ceea ce priveste impactul asupra mediului, precum si produse circulare si cu emisii reduse de CO_2.

Ghidul pentru evaluarea sustenabilitatii produsului este un ghid care clarifica standardele globale de eticheta ecologica si modul de interpretare a declaratiilor de mediu.

Ghid pentru evaluarea sustenabilitatii unui produs >

Echipament sustenabil

- Conform Reach Fara Svhc
- Fara Metale Grele Toxice
- Fara Mercur
- Informatii Privind Scutirea De La Rohs Da

Regulamentul Reach	Declaratia REACH
Directiva Rohs Ue	Conformitate proactivă (Produs în afara domeniului de aplicare a EU RoHS) Declaratia RoHS UE
Regulamentul Rohs China	Declaratia RoHS China Declaratia proactiva RoHS China (in afara domeniului de aplicare a RoHS China)

FISA TEHNICA E-DES-4P

Descărcător cu 4 poli cu întreruptor incorporat

Nr Crt.	Specificațiile tehnice impuse prin Caietul de sarcini	Corespondența propunerii tehnice cu specificațiile tehnice impuse prin Caietul de sarcini	Producător
0	1	2	3
1.	**Parametri tehnici si funcționali:** **1. Descărcător cu 4 poli:** - Număr poli: 4 (3P+N): - Protecţie tip 2; - Posibilitate de înlocuire a cartuşelor defecte; - Indicare vizuală a cartuşelor defecte: - Tensiune nominală: 400V; 50Hz-AC; - Curent nominal de descărcare ln: 20 kA; - Curent de scurtcircuit ln: 25 kA - Montaj: cu cleme pe şină DIN 35mm; - Domeniu de temperatura: 0° ... +40 °C - Conexiune electrică: terminale cu şurub: - Contact de semnalizare a poziţiei de defect: **2. Întreruptar cu 4 poli asociat:** - Număr poli: 4 (3P+N); - Tensiune nominală : 380 .. .415Vca 50Hz; - Curent nominal In=25A la 40°C; - Tip declanşare : termo-magnelic; - Cod curbă: C; - Limită de declanşare magnetică:8xIn; - Montaj cu cleme pe sina DIN	**Parametri tehnici si funcționali:** **1. Descărcător cu 4 poli:** - Număr poli: 4 (3P+N): - Protecţie tip 2; - Posibilitate de înlocuire a cartuşelor defecte; - Indicare vizuală a cartuşelor defecte: - Tensiune nominală: 400V; 50Hz-AC; - Curent nominal de descărcare ln: 20 kA; - Curent de scurtcircuit ln: 25 kA - Montaj: cu cleme pe şină DIN 35mm; - Domeniu de temperatura: 0° ... +40 °C - Conexiune electrică: terminale cu şurub: - Contact de semnalizare a poziţiei de defect: **2. Întreruptar cu 4 poli asociat:** - Număr poli: 4 (3P+N); - Tensiune nominală : 380 .. .415Vca 50Hz; - Curent nominal In=25A la 40°C; - Tip declanşare : termo-magnelic; - Cod curbă: C; - Limită de declanşare magnetică:8xIn; - Montaj cu cleme pe sina DIN	SCHNEIDER
2.	**Specificaţii de performanţă şi condiţii privind siguranta în exploatare:** - Protectia terminalelor la atingere cu mana.	**Specificaţii de performanţă şi condiţii privind siguranta în exploatare:** - Protectia terminalelor la atingere cu mana.	
3.	**Conditii privind conformitatea cu standarde relevante:** - SR EN 61643-11 - SR EN 60529.	**Conditii privind conformitatea cu standarde relevante:** - SR EN 61643-11 - SR EN 60529.	
4.	**Condiţii de garanţie şi postgaranţie:** - Producătorul va garanta calitatea şi buna funcţionare a produsului timp de 24 luni de la punerea în funcţiune sau de 36 luni de la data livrarii. - Produsul va corespunde normelor tehnice şi standardelor europene.	**Condiţii de garanţie şi postgaranţie:** - Producătorul garantează calitatea şi buna funcţionare a produsului timp de 24 luni de la punerea în funcţiune sau de 36 luni de la data livrarii. - Produsul va corespunde normelor tehnice şi standardelor europene.	
5.	**Condiţii cu caracter tehnic:** - Nu vor fi luate în consideraţie decât ofertele	**Condiţii cu caracter tehnic:** - Nu vor fi luate în consideraţie decât ofertele	

	însoţite de documentaţie completă pentru selecţie şi montaj în limba română. - Vor fi anexate: • instrucţiuni de montaj (scheme de conectare, broşuri, cataloage); • instrucţiuni de exploatare; • buletine de încercări, verificări, probe; • declaratie de conformitate.	însoţite de documentaţie completă pentru selecţie şi montaj în limba română. - Vor fi anexate: • instrucţiuni de montaj (scheme de conectare, broşuri, cataloage); • instrucţiuni de exploatare; • buletine de încercări, verificări, probe; • declaratie de conformitate.	

Fişă tehnică produs

Specificatii

Iquick Prd40R descarcator Modular, 3 Poli + N, 264V, cu Transfer La Distanta

A9L16294

Principal

Gama de produse	Acti9
Nume produs	Acti9 iQuick PRD
Tip produs sau componenta	Descărcător cu cartuş debroşabil
Nume scurt al dispozitivului	iQuick PRD40r
Domeniu de utilizare al dispozitivului	Distributie
Standarde	SR EN 61643-11:2012 IEC 61643-12:2011
Certificari produs	UE
Etichete privind calitatea	KEMA-KEUR NF
Descriere poli	3P + N
Semnalizare de la distanta	Cu
Compozitie contacte de semnalizare	1 SD (1 C/O)
Tip descarcator de supratensiune	Retea de distributie a energiei electrice
Sistem de impamantare	TN-S TT

Suplimentar

Tip clasa descarcator de supratensiune	Tip 2
Tehnologie pentru descarcator de supratensiune	MOV + GDT
[Ue] tensiune nominala de functionare	230/400 V c.a. (+/- 10 %) la 50/60 Hz
[In] nominal discharge current	Mod comun 20 kA (L/PE) Mod comun 20 kA (N/PE) Mod diferenţial 20 kA (L/N)
[Imax] maximum discharge current	Mod comun 40 kA L/PE Mod comun 40 kA N/PE Mod diferenţial 40 kA L/N
[Uc] tensiunea maxima de functionare continua	Mod comun 264 V N/PE Mod comun 350 V L/PE Mod diferenţial 350 V L/N
Nivel de protectie la tensiune maxim [Up]	Mod comun <1,5 kV tip 2 L/PE Mod comun <1,5 kV tip 2 N/PE

	Mod diferențial <2,5 kV tip 2 L/N
Tip dispozitiv de deconectare	Integrated circuit breaker - Icu 20 kA
Tensiune circuit de semnalizare	2 A 250 V c.a. 50/60 Hz
Mod de montare	Clipsabil (sina DIN)
Pasi de 9 mm	14,7
Inaltime	94 mm
Latime	131,5 mm
Adancime	75,9 mm
Greutate neta	0,86 kg
Culoare	Alb (RAL 9003)
Conexiuni - borne	Terminal tip tunel (partea superioara) 2,5…35 mm² Terminal tip tunel (partea de jos) 2,5…25 mm²
Cuplu de strangere	2,5 N.m

Mediu

Grad de protectie IK	IK05 conformitate cu IEC 62262
Umiditate relativa	5…90 %
Altitudine de functionare	2000 m
Temperatura ambientala de functionare	-25…60 °C
Temperatura de depozitare	-40…70 °C

Unitati de ambalare

Unit Type of Package 1	PCE
Package 1 Length	15,5 cm
Number of Units in Package 1	1
Package 2 Width	30,0 cm
Package 2 Height	30,0 cm
Package 2 Weight	11,18 kg
Package 1 Width	11,0 cm
Package 1 Height	9,5 cm
Package 1 Weight	896,0 g
Number of Units in Package 2	12
Unit Type of Package 2	S03
Package 2 Length	40,0 cm

Sustenabilitatea ofertei

Stare ofertă sustenabilă	Produs Green Premium
Regulamentul REACH	Declaratia REACH
Directiva RoHS UE	Conform Declaratia RoHS UE
Fara mercur	Da
Informatii privind scutirea de la RoHS	Da
Regulamentul RoHS China	Declaratia RoHS China Produs in afara domeniului de aplicare a RoHS China. Declaratia privind substantele in scop informativ.

Raport de mediu	Profilul ambiental al produsului
WEEE	În Uniunea Europeana, produsele trebuie reciclate respectand sistemul specific de colectare a deseurilor si nu trebuie sa ajunga in pubelele de colectare a deseurilor menajere.
Prezenta halogen	Produs cu piese din plastic si cabluri fara halogen

Garanţie contractuala

Garantie	18 months

FISA TEHNICA E-AR - Analizor de retea

Nr Crt.	Specificațiile tehnice impuse prin Caietul de sarcini	Corespondența propunerii tehnice cu specificațiile tehnice impuse prin Caietul de sarcini	Producător
0	1	2	3
1.	**Parametrii tehnici si funcționali:** - Domeniu industrial; - Grad de protecție minim IP 54 - Utilizabil pentru rețea trifazata; - Măsurare armonici pana la armonica 5; - Domeniu de temperatura: 0° C ... +40° C - Tensiune de alimentare 24Vcc; - Domeniu măsurat: 120 ... 280 V ac 50 Hz pe faza; - Contacte ieșire: 1 NC + 1 NO minim 5A: - Interfața RS 485 sau ethernet ; - Display LCD de minim 3,5"; - Măsurare si înregistrare parametrii electrici (RMS real): V, A, kW, kVA, kVAr, Hz, kWh, kVArh - Protecția terminalelor la atingere cu mana; - Memorie evenimente minim 256 MB - Accesorii: • transformatoare de curent de clasa 1, IP30, curent secundar 5A, carcasa material plastic • cleme de curent conexiune transformatoare de curent si analizor cu posibilitate de șuntare	**Parametrii tehnici si funcționali:** - Domeniu industrial; - Grad de protecție IP 54 - Utilizabil pentru rețea trifazata; - Măsurare armonici pana la armonica 5; - Domeniu de temperatura: -10° C ... +55° C - Tensiune de alimentare 24Vcc; - Domeniu măsurat: 120 ... 280 V ac 50 Hz pe faza; - Contacte ieșire: 1 NC + 1 NO minim 5A: - Interfața RS 485; - Display LCD de minim 3,5"; - Măsurare si înregistrare parametrii electrici (RMS real): V, A, kW, kVA, kVAr, Hz, kWh, kVArh - Protecția terminalelor la atingere cu mana; - Memorie evenimente: 256 MB - Accesorii: • transformatoare de curent de clasa 1, IP30, curent secundar 5A, carcasa material plastic • cleme de curent conexiune transformatoare de curent si analizor cu posibilitate de șuntare	**WEIDMULLER**
2.	**Specificaţii de performanţă şi condiţii privind siguranta în exploatare:** - Conform caiet de sarcini	**Specificaţii de performanţă şi condiţii privind siguranta în exploatare:** - Conform caiet de sarcini	
3.	**Conditii privind conformitatea cu standarde relevante:** - SR EN 60947-5-1; - SR EN 60529; - SR EN 60255	**Conditii privind conformitatea cu standarde relevante:** - SR EN 60947-5-1; - SR EN 60529; - SR EN 60255	
4.	**Condiţii de garanţie şi postgaranţie:** - Producătorul va garanta calitatea şi buna funcţionare a produsului timp de 24 luni de la punerea în funcţiune sau de 36 luni de la data livrarii. - Produsul va corespunde normelor tehnice şi standardelor europene.	**Condiţii de garanţie şi postgaranţie:** - Producătorul garantează calitatea şi buna funcţionare a produsului timp de 24 luni de la punerea în funcţiune sau de 36 luni de la data livrarii. Produsul va corespunde normelor tehnice şi standardelor europene.	
5.	**Condiţii cu caracter tehnic:** - Nu vor fi luate în consideraţie decât ofertele însoţite de documentaţie completă pentru selecţie şi montaj în limba română.	**Condiţii cu caracter tehnic:** - Nu vor fi luate în consideraţie decât ofertele însoţite de documentaţie completă pentru selecţie şi montaj în limba română.	

	- Vor fi anexate: • instrucţiuni de montaj (scheme de conectare, broşuri, cataloage); • instrucţiuni de exploatare; • buletine de încercări, verificări, probe; • declaratie de conformitate.	- Vor fi anexate: • instrucţiuni de montaj (scheme de conectare, broşuri, cataloage); • instrucţiuni de exploatare; • buletine de încercări, verificări, probe; • declaratie de conformitate.	

Technical Data

General	
Net weight (with attached connectors)	approx. 358g
Packaging weight (including accessories)	approx. 790g
Battery	Lithium battery CR2032, 3 V (approval i.a.w. UL 1642)
Service life of the backlight	40000 h (after this period of time the background lighting efficiency will reduce by approx. 50 %)

Transport and storage The following information applies for devices that are transported or stored in their original packaging.	
Free fall	1 m
Temperature	K55 (-25 to +70 °C)
Relative humidity	0 to 90 % RH

Ambient conditions during operation	
The Energy Meter 610/610-PB is intended for use in weather-protected, fixed locations. Protection class II according to IEC 60563 (VDE 0106, part 1).	
Rated temperature range	K55 (-10 to +55 °C)
Relative humidity	0 to 75 % RH
Operational altitude	0 to 2000 m above sea level
Degree of pollution	2
Installation position	vertical
Ventilation	Forced ventilation is not required.
Foreign body and water protection - Front - Back - Front with seal	 IP40 according to EN 60529 IP20 according to EN 60529 IP54 according to EN 60529

Power supply voltage	
Option 230V: - Nominal range - Power consumption	 90 to 277 V (50/60 Hz) or DC 90 to 250 V; 300 V CAT III Type 610: 3 W / 6 VA Type 610-PB: max. 4 W / 7,5 VA
Option 24V: - Nominal range - Power consumption	 24 to 90 V AC/DC; 150 V CAT III Type 610: 3 W / 5 VA Type 610-PB: max. 5 W / 6,5 VA
Operating range	+-10 % of nominal range
Internal fuse, not replaceable	Type T1A / 250V/277V according IEC 60127
Recommended overcurrent protection device for line protection (certified under UL)	Option 230 V: 6 to 16 A (Char. B) Option 24 V: 1 to 6 A (Char. B)

Recommendation for a maximum number of devices on a circuit breaker:

- Option 230 V:	Circuit breaker B6A:	max. 4 devices
	Circuit breaker B16A:	max. 11 devices
- Option 24 V:	Circuit breaker B6A:	max. 3 devices
	Circuit breaker B16A:	max. 9 devices

Connection capacity of the terminals (power supply) Connectable conductor. Only one conductor may be connected per contact point!	
Single-wire, multi-wire, finely stranded conductor	0.2 to 2.5.mm², AWG 26 to 12
Pin terminals, ferrules	0.2 to 2.5.mm²
Tightening torque	0.4 to 0.5.Nm
Stripping length	7 mm

Digital outputs 6 digital outputs, semi-conductor relay, not short circuit protected.	
Switching voltage	max. 33 V AC, 60 V DC
Switching current	max. 50 mAeff AC/DC
Reaction time	10/12 periods + 10 ms *
Pulse output (energy pulses)	max. 50 Hz

* Reaction time at 50 Hz, for example: 200 ms + 10 ms = 210 ms

Digital inputs 4 optional digital outputs, semiconductor relays, not short-circuit proof.	
Maximum counter frequency	20 Hz
Input signal present	18 to 28 V DC (typical 4 mA)
Input signal not present	0 to 5 V DC, current less than 0.5 mA

Cable length (digital inputs and outputs)	
Cable lengths	- up to 30 m unshielded - from 30 m shielded

Connection capacity of the terminals (digital in-/outputs)	
Rigid/flexible	0.1 to 1.5 mm^2, AWG 28 to 16
Flexible with ferrules without plastic sleeve	0.,20 to 1.5 mm^2
Flexible with ferrules with plastic sleeve	0.,20 to 1.5 mm^2
Tightening torque	0.20 to 0.25 Nm
Stripping length	7 mm

Serial interfaces	
RS485 - Modbus RTU/slave	9.6 kbps, 19.2 kbps, 38.4 kbps, 57.6 kbps, 115.2 kbps
Stripping length	7 mm
USB (receptacle)	USB 2.0, type B, max. transfer rate 921.6 kbps
Profibus (only Energy Meter 610-PB) - Profibus DP/V0 - Receptacle	 - 9,6 kbps to 12 Mbps - D-sub, 9-pole

Connection capacity of the terminals (RS485)	
Single-wire, multi-wire, finely stranded conductor	0.20 to 1.5 mm^2
Pin terminals, ferrules	0.20 to 1.5 mm^2
Tightening torque	0.20 to 0.25 Nm
Stripping length	7 mm

Voltage metering	
Three-phase, 4-wire systems with nominal voltages up to	277 V / 480 V (+-10 %)
Three-phase, 3-wire systems, un-earthed, with nominal voltages up to	IT 480 V (+-10 %)
Overvoltage category	300 V CAT III
Rated surge voltage	4 kV
Metering range L-N	0[1)] to 300 Vrms (max. overvoltage 520 Vrms)
Metering range L-L	0[1)] to 520 Vrms (max. overvoltage 900 Vrms)
Resolution	0.01 V
Crest factor	2.45 (relative to the metering range)
Impedance	4 MOhm/phase
Power consumption	approx. 0.1 VA
Sampling rate	21.33 kHz (50 Hz), 25.6 kHz (60 Hz) per measuring channel
Mains frequency Resolution	45 to 65 Hz 0.01 Hz

1) The Energy Meter 610/610-PB can only detect measurements when a voltage L1-N greater than 20 Veff (4-wire measurement) at voltage input V1 or a voltage L1-L2 greater than 34 Veff (3-wire measurement) is applied.

Connection capacity of the terminals (voltage measurement) Connectable conductor. Only one conductor may be connected per contact point!	
Single-wire, multi-wire, finely stranded conductor	0.08 to 4 mm^2, AWG 28 to 12
Pin terminals, ferrules	0.2 to 2.5 mm^2
Tightening torque	0.4 to 0.5 Nm
Stripping length	7 mm

Current measurement I1 - I4	
Rated current	5 A
Measurement range	0 to 6 Arms
Crest factor	1.98
Resolution	0.1 mA (Display 0.01 A)
Overvoltage category	300 V CAT II
Measurement surge voltage	2 kV
Power consumption	ca. 0.2 VA (Ri = 5 mOhm)
Overload for 1 second	120 A (sinusoidal)
Sampling frequency	21.33 kHz (50 Hz), 25.6 kHz (60 Hz) per measurement channel

Connection capacity of the terminals (current measurement) Connectable conductor. Only one conductor may be connected per contact point!	
Single-wire, multi-wire, finely stranded conductor	0.2 to 2.5 mm^2, AWG 26 to 12
Pin terminals, ferrules	0.2 to 2.5 mm^2
Tightening torque	0.4 to 0.5 Nm
Stripping length	7 mm

Parameters of functions

Function	Symbol	Accuracy class	Metering range	Display range
Total real power	P	0.5 [5] (IEC 61557-12)	0 to 5.4 kW	0 W to 999 GW *
Total reactive power	*QA, Qv*	1 (IEC 61557-12)	0 to 5.4 kvar	0 varh to 999 Gvar *
Total apparent power	*SA, Sv*	0.5 [5] (IEC 61557-12)	0 to 5.4 kVA	0 VA to 999 GVA *
Total active energy	Ea	0.5S [5] [6] (IEC 61557-12)	0 to 5.4 kWh	0 Wh to 999 GWh *
Total reactive energy	*ErA, ErV*	1 (IEC 61557-12)	0 to 5.4 kvarh	0 varh to 999 Gvarh *
Total apparent energy	*EapA, EapV*	0.5 [5] (IEC 61557-12)	0 to 5.4 kVAh	0 VAh to 999 GVAh *
Frequency	f	0.05 (IEC 61557-12)	45 to 65 Hz	45.00 Hz to 65.00 Hz
Phase current	I	0.2 (IEC 61557-12)	0 to 6 Arms	0 A to 999 kA
Measured neutral conductor current	IN	1 (IEC 61557-12)	0 to 6 Arms	0 A to 999 kA
Calculated neutral conductor current	INc	1 (IEC 61557-12)	0.03 to 25 A	0.03 A to 999 kA
Voltage	U L-N	0.2 (IEC 61557-12)	10 to 300 Vrms	0 V to 999 kV
Voltage	U L-L	0.2 (IEC 61557-12)	18 to 520 Vrms	0 V to 999 kV
Displacement factor	PFA, PFV	0.5 (IEC 61557-12)	0.00 to 1.00	0.00 to 1.00
Short-term flicker, long-term flicker	Pst, Plt	-	-	-
Voltage dips (L-N)	Udip	-	-	-
Voltage surges (L-N)	Uswl	-	-	-
Transient overvoltages	Utr	-	-	-
Voltage interruptions	Uint	-	-	-
Voltage unbalance (L-N) [1]	Unba	-	-	-
Voltage unbalance (L-N) [2]	Unb	-	-	-
Voltage harmonics	Uh	Class 1 (IEC 61000-4-7)	up to 2.5 kHz	0 V to 999 kV
THD of the voltage [3]	THDu	1.0 (IEC 61557-12)	up to 2.5 kHz	0 % to 999 %
THD of the voltage [4]	THD-Ru	-	-	-
Current harmonics	Ih	Class 1 (IEC 61000-4-7)	up to 2.5 kHz	0 A to 999 kA
THD of the current [3]	THDi	1.0 (IEC 61557-12)	up to 2.5 kHz	0 % to 999 %
THD of the current [4]	THD-Ri	-	-	-
Mains signal voltage	MSV	-	-	-

1) Referred to amplitude.
2) Referred to phase and amplitude.
3) Referred to mains frequency.
4) Referred to root mean square value.
5) Accuracy class 0.5 with ../5A transformer.
   Accuracy class 1 with ../1A transformer.
6) Accuracy class 0.5S according IEC 62053-22.
* The display returns to 0 W when the maximum total energy values are reached.

Parameter and Modbus address list

The following excerpt from the parameter list contains settings that are necessary for proper operation of the Energy Meter 610/610-PB, such as current transformers and device addresses. The values in the parameter list can be written and read.
In the excerpt, the measured value list files the measured and calculated measured values, output status data and recorded values so that they can be read.

Table 1 - Parameter list

Address	Format	RD/WR	Unit	Note	Adjustment Range	Default
0	SHORT	RD/WR	-	Device address (Modbus/Profibus)	0 to 255 [1)]	1
1	SHORT	RD/WR	kbps	Baud rate for Modbus (0 = 9.6 kbps, 1 = 19.2 kbps, 2 = 38.4 kbps, 3 = 57.6 kbps, 4 = 115.2 kbps)	0 to 7 (5 to 7 only for internal use)	4
2	SHORT	RD/WR	-	Modbus Master 0 = Slave	0, 1	0
3	SHORT	RD/WR	-	Stopbits 0 = 1 Bit, none parity 1 = 2 Bits, none parity 2 = 1 Bit, even parity 3 = 1 Bit, uneven parity	0 to 3	0
10	FLOAT	RD/WR	A	Current transformer I1, primary	0 to 1000000 [2)]	5
12	FLOAT	RD/WR	A	Current transformer I1, secondary	1 to 5	5
14	FLOAT	RD/WR	V	Voltage transformer V1, primary	0 to 1000000 [2)]	400
16	FLOAT	RD/WR	V	Voltage transformer V1, secondary	100, 400	400
18	FLOAT	RD/WR	A	Current transformer I2, primary	0 to 1000000 [2)]	5
20	FLOAT	RD/WR	A	Current transformer I2, secondary	1 to 5	5
22	FLOAT	RD/WR	V	Voltage transformer V2, primary	0 to 1000000	400
24	FLOAT	RD/WR	V	Voltage transformer V2, secondary	100, 400	400
26	FLOAT	RD/WR	A	Current transformer I3, primary	0 to 1000000	5
28	FLOAT	RD/WR	A	Current transformer I3, secondary	1 to 5	5
30	FLOAT	RD/WR	V	Voltage transformer V3, primary	0 to 1000000	400
32	FLOAT	RD/WR	V	Voltage transformer V3, secondary	100, 400	400
34	SHORT	RD/WR	Hz	Frequency determination 0 = Auto, 45 to 65 = Hz	0, 45 to 65	0
35	SHORT	RD/WR	-	Display contrast 0 (low), 9 (high)	0 to 9	5
36	SHORT	RD/WR	-	Backlight 0 (dark), 9 (light)	0 to 9	6
37	SHORT	RD/WR	-	Display profile 0 = default display profile 1 = default display profile 2 = vdefault display profile 3 = freely selectable display profile	0 to 3	0
38	SHORT	RD/WR	-	Display change profile 0 to 2 = default display change profiles 3 = freely selectable display change profile	0 to 3	0
39	SHORT	RD/WR	s	Changeover time	0 to 60	0
40	SHORT	RD/WR	-	Averaging time, I	0 to 8 *	6
41	SHORT	RD/WR	-	Averaging time, P	0 to 8 *	6
42	SHORT	RD/WR	-	Averaging time, U	0 to 8 *	6
45	USHORT	RD/WR	mA	Response threshold of current measuring I1 to I3	0 to 200	5
50	SHORT	RD/WR	-	Password	0 to 999	0 (Kein Passwort)
100	SHORT	RD/WR	-	Address of the measured value, Digital output 1	0 to 32000	874
101	SHORT	RD/WR	-	Address of the measured value, Digital output 2	0 to 32000	882
102	FLOAT	RD/WR	Wh	Pulse value, Digital output 1	-1000000 to +1000000	1000
104	FLOAT	RD/WR	Wh	Pulse value, Digital output 2	-1000000 to +1000000	1000
106	SHORT	RD/WR	10ms	Minimum pulse length (1 = 10 ms) Digital output 1/2	1 to 1000	5 (= 50 ms)

206	SHORT	RD/WR	s	“Drag indicator” period duration	300 to 3600	900
207	SHORT	RD/WR	s	“Drag indicator” capture time	1 to 20	10
208	SHORT	RD/WR	-	Config. Digital input 1 0 = internal synchronisation 1 = external synchronisation (NO) 2 = external synchronisation (NC)	0 to 2	0
500	SHORT	RD/WR	-	Terminal assignment, I L1	-3...0...+3 1)	+1
501	SHORT	RD/WR	-	Terminal assignment, I L2	-3...0...+3 1)	+2
502	SHORT	RD/WR	-	Terminal assignment, I L3	-3...0...+3 1)	+3
503	SHORT	RD/WR	-	Terminal assignment, U L1	0 to 3 1)	1
504	SHORT	RD/WR	-	Terminal assignment, U L2	0 to 3 1)	2
505	SHORT	RD/WR	-	Terminal assignment, U L3	0 to 3 1)	3
506	SHORT	RD/WR	-	Clear min. and max. values	0 to 1	0
507	SHORT	RD/WR	-	Clear energy meter	0 to 1	0
508	SHORT	RD/WR	-	Force write EEPROM	0 to 1	0
Note: Energy values and minimum and maximum values are written to the EEPROM every 5 minutes.						
509	SHORT	RD/WR	-	Voltage connection diagram	0 to 8 2)	0
510	SHORT	RD/WR	-	Current connection diagram	0 to 8	0
511	SHORT	RD/WR	-	Relative voltage for THD and FFT	0, 1	0
The voltages for THD and FFT can be shown on the display as L-N or L-L values. 0 = LN, 1 = LL						
512	SHORT	RD/WR	-	Year	0 to 99	
513	SHORT	RD/WR	-	Month	0 to 12	
514	SHORT	RD/WR	-	Day	0 to 31	
515	SHORT	RD/WR	-	Hour	0 to 24	
516	SHORT	RD/WR	-	Minute	0 to 59	
517	SHORT	RD/WR	-	Second	0 to 59	
600	UINT	RD/WR	-	Metering range exceedance	0 to 0xFFFFFFFF	
746	SHORT	RD/WR	s	Period of time after which the backlight will switch to standby	60 to 9999	900
747	SHORT	RD/WR	s	Brightness of the standby backlight	0 to 9	0
750	SHORT	RD	-	Software release		
754	SERNR	RD	-	Serial number		
756	SERNR	RD	-	Production number		

(*1) Values 0 and 248 through 255 are reserved and may not be used.
(*2) The adjustable value of 0 does not produce any useful work values and must not be used.
* 0 = 5 seconds; 1 = 10 seconds.; 2 = 15 seconds; 3 = 30 seconds; 4 = 1 minute; 5 = 5 minutes; 6 = 8 minutes; 7 = 10 minutes; 8 = 15 minutes
1) 0 = No measurement of the current or voltage path.
2) The setting 8 is equal setting 0.

A complete overview of the parameters and measured values as well as explanations regarding the selected measured values is filed in the document “Modbus Address List” in the Internet on the product pages.

The addresses contained in the description can be adjusted directly on the device in the range from 0 to 800. The address range above 1000 can only be processed via modbus!

Only the first three positions (###) of a value are shown on the display. Values larger than 1,000 are marked with “k”. Example: 003k = 3000

Table 2 - Modbus address list
(frequently used measured values)

Modbus address	Address above display	Format	RD/WR	Unit	Note
19000	808	float	RD	V	Voltage L1-N
19002	810	float	RD	V	Voltage L2-N
19004	812	float	RD	V	Voltage L3-N
19006	814	float	RD	V	Voltage L1-L2
19008	816	float	RD	V	Voltage L2-L3
19010	818	float	RD	V	Voltage L3-L1
19012	860	float	RD	A	Current, L1
19014	862	float	RD	A	Current, L2
19016	864	float	RD	A	Current, L3
19018	866	float	RD	A	Vektor sum; IN = I1 + I2 + I3
19020	868	float	RD	W	Real power L1
19022	870	float	RD	W	Real power L2
19024	872	float	RD	W	Real power L3
19026	874	float	RD	W	Sum; Psum3=P1+P2+P3
19028	884	float	RD	VA	Apparent powerS L1
19030	886	float	RD	VA	Apparent powerS L2
19032	888	float	RD	VA	Apparent powerS L3
19034	890	float	RD	VA	Sum; Ssum3 = S1 + S2 + S3
19036	876	float	RD	var	Fund. reactive power (mains frequency) Q L1
19038	878	float	RD	var	Fund. reactive power (mains frequency) Q L2
19040	880	float	RD	var	Fund. reactive power (mains frequency) Q L3
19042	882	float	RD	var	Sum; Qsum3 = Q1 + Q2 + Q3
19044	820	float	RD	-	Fund. power factor, CosPhi; U L1-N IL1
19046	822	float	RD	-	Fund. power factor, CosPhi; U L2-N IL2
19048	824	float	RD	-	Fund. power factor, CosPhi; U L3-N IL3
19050	800	float	RD	Hz	Measured frequency
19052	-	float	RD	-	Rotation field; 1 = right, 0 = none, -1 = left
19054	-	float	RD	Wh	Real energy L1
19056	-	float	RD	Wh	Real energy L2
19058	-	float	RD	Wh	Real energy L3
19060	-	float	RD	Wh	Real energy L1..L3
19062	-	float	RD	Wh	Real energy L1, consumed
19064	-	float	RD	Wh	Real energy L2, consumed
19066	-	float	RD	Wh	Real energy L3, consumed
19068	-	float	RD	Wh	Real energy L1..L3, consumed, rate 1
19070	-	float	RD	Wh	Real energy L1, delivered
19072	-	float	RD	Wh	Real energy L2, delivered
19074	-	float	RD	Wh	Real energy L3, delivered
19076	-	float	RD	Wh	Real energy L1..L3, delivered
19078	-	float	RD	VAh	Apparent energy L1
19080	-	float	RD	VAh	Apparent energy L2
19082	-	float	RD	VAh	Apparent energy L3
19084	-	float	RD	VAh	Apparent energy L1..L3
19086	-	float	RD	varh	Reaktive energy L1

19088	-	float	RD	varh	Reaktive energy L2
19090	-	float	RD	varh	Reaktive energy L3
19092	-	float	RD	varh	Reaktive energy L1..L3
19094	-	float	RD	varh	Reaktive energy, inductive, L1
19096	-	float	RD	varh	Reaktive energy, inductive, L2
19098	-	float	RD	varh	Reaktive energy, inductive, L3
19100	-	float	RD	varh	Reaktive energy, L1..L3, inductive
19102	-	float	RD	varh	Reactive energy, capacitive, L1
19104	-	float	RD	varh	Reactive energy, capacitive, L2
19106	-	float	RD	varh	Reactive energy, capacitive, L3
19108	-	float	RD	varh	Reactive energy, L1..L3, capacitive
19110	836	float	RD	%	Harmonic, THD, U L1-N
19112	838	float	RD	%	Harmonic, THD, U L2-N
19114	840	float	RD	%	Harmonic, THD, U L3-N
19116	908	float	RD	%	Harmonic, THD, I L1
19118	910	float	RD	%	Harmonic, THD, I L2
19120	912	float	RD	%	Harmonic, THD, I L3

Modbus address	Address above display	Format	RD/WR	Unit	Note	Adjustment range	Default
20022	-	float	RD/WR	A	Current transformer I4, primary	0 to 1000000	5
20024	-	float	RD/WR	A	Current transformer I4, secondary	1 to 5	5

The addresses contained in the description can be adjusted directly on the device in the range from 0 to 800.
The address range 800 to 999 is available for programming comparators on the device. The addresses above 1000 can only be processed via modbus!

A complete overview of the parameters and measured values as well as explanations regarding the selected measured values is filed in the document “Modbus Address List” in the Internet on the product pages.

Number formats

Type	Size	Minimum	Maximum
short	16 bit	-2^{15}	$2^{15} - 1$
ushort	16 bit	0	$2^{16} -1$
int	32 bit	-2^{31}	$2^{31} - 1$
uint	32 bit	0	$2^{32} - 1$
float	32 bit	IEEE 754	IEEE 754

Notes on saving measurement values and configuration data:

- The following measurement values are saved at least every 5 minutes:
  - Comparator timer
  - S0 meter readings
  - Minimum / maximum / mean values
  - Energy values
- Configuration data is saved immediately!

Dimension diagrams

All dimensions in mm.

Rear view of Energy Meter 610-PB

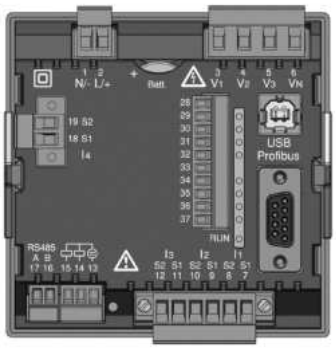

Side view of Energy Meter 610-PB
with USB and Profibus connectors inserted

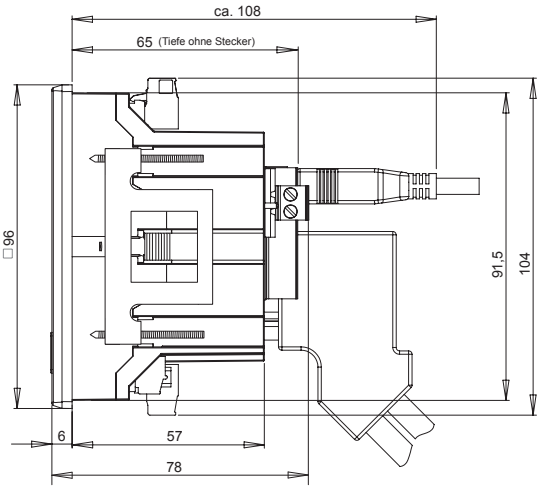

Rear view of Energy Meter 610

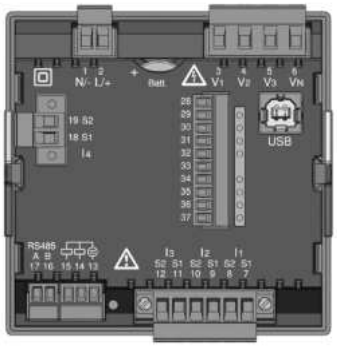

Side view of Energy Meter 610
with USB connector inserted

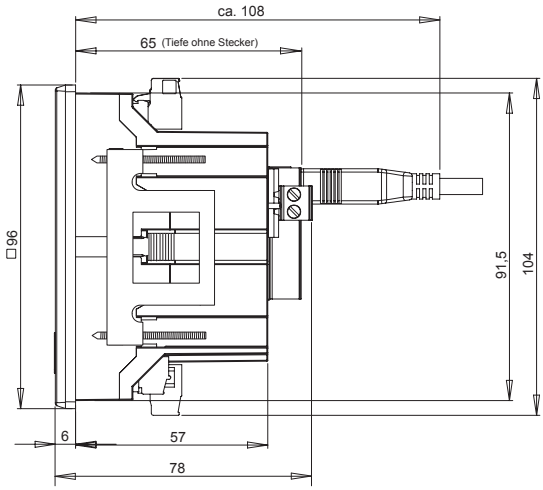

Cutout dimensions

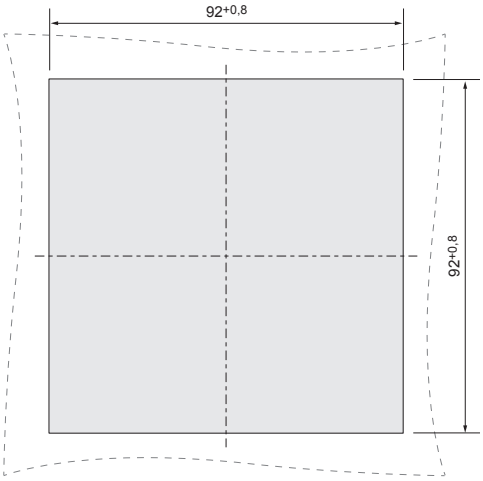

Fişă tehnică produs

Specificatii

Transformator De Curent Tropicalizat Montaj Din 50 5 Pentru Cabluri D. 21

METSECT5CC005

Principal

Gama	PowerLogic
Nume produs	CT
Tip produs sau componenta	Transformator de curent
Curent secundar	5 A
Clasa de precizie	Clasa 1 la 1,25 VA Clasa 3 la 1,5 VA
[In] curent nominal	50 A

Suplimentar

Tip transformator de curent	Pe picioare izolante pentru cablu
Raport transformator de curent	50/5
[Ith] curent termic conventional in aer liber	3 kA
Curent de rezistenta dinamic	2.5 Ith
Factor de siguranta maxim	5
[Ue] tensiune nominala de functionare	< 720 V c.a. 50/60 Hz
[Ui] tensiunea nominala de izolatie	3 kV
Mod de montare	Clipsabil Cu suruburi
Suport de montare	Placa de montare Sina DIN
Latime	Exterior 44 mm
Inaltime	Exterior 65 mm
Adancime	Frame 30 mm Total 37 mm
Diametru	21 mm
Greutate neta	0,19 kg
[Uimp] tensiune de tinere la impuls	3 kV
Clasa de izolatie electrica	Clasa B
Diametru exterior cablu	21 mm

Etansare	Cu

Mediu

Standarde	VDE 0414 IEC 61869-2
Certificari produs	UE
Grad de protectie IP	IP20
Umiditate relativa	0…95 %
Temperatura ambientala de functionare	-25…60 °C

Unitati de ambalare

Unitate de masura pentru prima forma de impachetare	Db
Numar unitati in prima forma de impachetare	1
Inaltime prima forma de impachetare	5,5 cm
Latime prima forma de impachetare	5,5 cm
Lungime prima forma de impachetare	8,4 cm
Greutate prima forma de impachetare	195,0 g
Unitate de masura pentru a doua forma de impachetare	S02
Numar unitati in a doua forma de impachetare	50
Inaltime a doua forma de impachetare	15,0 cm
Latime a doua forma de impachetare	30,0 cm
Lungime a doua forma de impachetare	40,0 cm
Greutate a doua forma de impachetare	9,95 kg

Sustenabilitatea ofertei

Stare ofertă sustenabilă	Produs Green Premium
Regulamentul REACH	Declaratia REACH
Conform REACh fara SVHC	Da
Directiva RoHS UE	Conform Declaratia RoHS UE
Fara mercur	Da
Regulamentul RoHS China	Declaratia RoHS China
Informatii privind scutirea de la RoHS	Da
Raport de mediu	Profilul ambiental al produsului
Profil circularitate	Informatii privind sfarsitul duratei de viata
WEEE	În Uniunea Europeana, produsele trebuie reciclate respectand sistemul specific de colectare a deseurilor si nu trebuie sa ajunga in pubelele de colectare a deseurilor menajere.

Garanţie contractuala

Garantie	18 luni

Substitutii recomandate

ENERGY METER 610-24

Weidmüller Interfaces GmbH & Co. KG
Postfach 3030
32760 Detmold
Tel. +49 5231 14-0
Fax. +49 5231 14-2083
info@weidmueller.com
www.weidmueller.com

Energy meters - ValueLine

Advanced functionality of energy data capture

The scope of performance of the ValueLine energy meters goes beyond the core functions of energy measurement.
They are also suitable for determining, storing and visualising further energy quality parameters.
The free "ecoExplorer go" software is available for most types of the product group,
on the one hand for device configuration / commissioning / visualisation of the measured values and on the other hand for analysing the power quality.

General ordering data

Version	Supply voltage : 24 V
Order No.	2540920000
Type	ENERGY METER 610-24
GTIN (EAN)	4050118553246
Qty.	1 pc(s).

ENERGY METER 610-24

Weidmüller Interfaces GmbH & Co. KG
Postfach 3030
32760 Detmold
Tel. +49 5231 14-0
Fax. +49 5231 14-2083
info@weidmueller.com
www.weidmueller.com

Technical data

Dimensions and weights

Depth	65 mm	Depth (inches)	2.559 inch
Height	96 mm	Height (inches)	3.78 inch
Width	96 mm	Width (inches)	3.78 inch
Net weight	250 g		

Temperatures

Storage temperature	-25 °C...70 °C	Humidity at storage temperature	0...90 % RH
Operating temperature	-10 °C...55 °C	Operating temperature, min.	-10 °C
Operating temperature, max.	55 °C	Humidity at operating temperature	0 - 75% RH

Measuring current input

Current-measuring channels	4	Distortion factor THD-I in %	Yes
Harmonics, per order / current	1.-40.	Measuring accuracy for current	0.2 %
Rated current	1 / 5 A	Residual current measuring	No

Measuring voltage input

Distortion factor THD-U in %	Yes	Four-wire system	Yes
Harmonics, per order / voltage	1.-40.	Measurement range, voltage L-L, AC	480 V
Measurement range, voltage L-N, AC	277 V	Measuring accuracy for voltage	0.2 %
Quadrants	4	Three-wire system	Yes

Communication

Interface	RS485: 9,6 – 115,2 kbps, USB	Protocol	Modbus RTU

Inputs/outputs

Number of digital inputs	4	Number of digital outputs	6
Number of pulse outputs	6	Temperature input	No

Measurement data recording

Memory; minimum and maximum values	Yes	Memory size	256 MB
Number of memory values	10,000 k	Update interval register	200 ms
Min. memory recording interval	60 s	Software	ecoExplorer go®
Integrated logic	Yes		

ENERGY METER 610-24

Weidmüller Interfaces GmbH & Co. KG
Postfach 3030
32760 Detmold
Tel. +49 5231 14-0
Fax. +49 5231 14-2083
info@weidmueller.com
www.weidmueller.com

Technical data

Technical data

Protection degree	IP20, IP40	Rated current	1 / 5 A
Standards	DIN EN 61326, IEC 61010-1, IEC 61010-2-030	Measurement range, voltage L-N, AC	277 V
Measurement range, voltage L-L, AC	480 V	Surge voltage category	300 V CAT III
Voltage supply	24 - 90 V AC (50/60 Hz), 24 - 90 V DC	Supply voltage	24 V
Three-wire system	Yes	Four-wire system	Yes
Quadrants	4	Sampling frequency 50/60 Hz	25.6 kHz
Continuous measurements	Yes	Measurement result per second	5
Effective value from the period (50/60 Hz)	10 / 12	Residual current measuring	No
Current-measuring channels	4	Measuring accuracy for voltage	0.2 %
Measuring accuracy for current	0.2 %	Measurement accuracy for active energy (kWh, .../5 A)	Class 0.5S
Operating-hours counter	Yes	Weekly time switch	No
Clock	Yes	Bimetal function	Yes

Voltage quality measurement

Harmonics, per order / voltage	1.-40.	Harmonics, per order / current	1.-40.
Distortion factor THD-U in %	Yes	Distortion factor THD-I in %	Yes
Unbalanced	No	Positive, negative and zero system	Yes
Brief interruptions	No	Sequence-of-events recorder function	No

Insulation coordination

Surge voltage category	300 V CAT III

Classifications

ETIM 6.0	EC002301	ETIM 7.0	EC002301
ETIM 8.0	EC002301	ECLASS 9.0	27-14-23-30
ECLASS 9.1	27-21-03-01	ECLASS 10.0	27-14-23-30
ECLASS 11.0	27-14-23-30	ECLASS 12.0	27-14-23-30

Approvals

Approvals

Approvals	CE
ROHS	Conform
UL File Number Search	UL Website
Certificate no. (cULus)	E469563

ENERGY METER 610-24

Weidmüller Interfaces GmbH & Co. KG
Postfach 3030
32760 Detmold
Tel. +49 5231 14-0
Fax. +49 5231 14-2083
info@weidmueller.com
www.weidmueller.com

Technical data

Downloads

Approval/Certificate/Document of Conformity	KC-Certification Declaration of Conformity
Engineering Data	CAD data – STEP
Software	Device description – MODBUS address list Device description – GSD DATA Runtime Software – Win64 - ecoExplorer go Driver – USB File
User Documentation	Quick Guide German/English Manual ECOEXPLORER GO English Manual Energy Meter 610 PB German/English
Catalogues	Catalogues in PDF-format

ENERGY METER 610-24

Weidmüller Interfaces GmbH & Co. KG
Postfach 3030
32760 Detmold
Tel. +49 5231 14-0
Fax. +49 5231 14-2083
info@weidmueller.com
www.weidmueller.com

Drawings

Dimensioned drawing

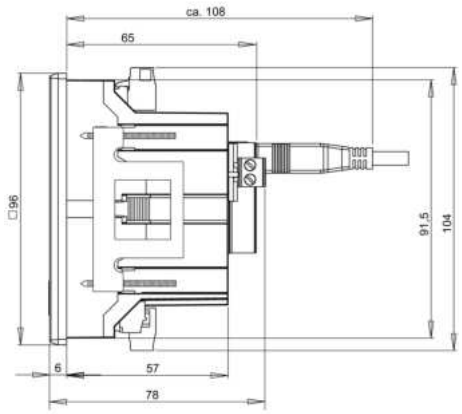

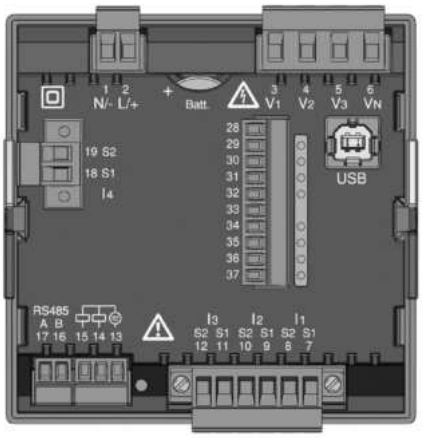

FISA TEHNICA E-DIS-4P
Distribuitor cu 4 poli

Nr Crt.	Specificațiile tehnice impuse prin Caietul de sarcini	Corespondența propunerii tehnice cu specificațiile tehnice impuse prin Caietul de sarcini	Producător
0	1	2	3
1.	**Parametrii tehnici si funcționali:** - Număr poli: 4; - Curent nominal minim: 80A - Tensiune nominal: 230/400V; 50/60Hz-AC; - Tensiune maxima de operare: 500Vca; - Curent de scurt-circuit: lpk 24kA / lcw 1 s 3 kA; - Temperatura de lucru: 0° C ... +40° C - Montaj: cu cleme pe șină DIN 35mm;	**Parametrii tehnici si funcționali:** - Număr poli: 4; - Curent nominal minim: 80A - Tensiune nominal: 230/400V; 50/60Hz-AC; - Tensiune maxima de operare: 500Vca; - Curent de scurt-circuit: lpk 24kA / lcw 1 s 3 kA; - Temperatura de lucru: 0° C ... +40° C - Montaj: cu cleme pe șină DIN 35mm;	SCHNEIDER
2.	**Specificaţii de performanţă şi condiţii privind siguranta în exploatare:** - Protecția terminalelor la atingerea cu mâna	**Specificaţii de performanţă şi condiţii privind siguranta în exploatare:** - Protecția terminalelor la atingerea cu mâna	
3.	**Conditii privind conformitatea cu standarde relevante:** - Construcție conform: IEC 60947-7-1	**Conditii privind conformitatea cu standarde relevante:** - Construcție conform: IEC 60947-7-1	
4.	**Condiţii de garanţie şi postgaranţie:** - Producătorul va garanta calitatea şi buna funcţionare a produsului timp de 24 luni de la punerea în funcţiune sau de 36 luni de la data livrarii. - Produsul va corespunde normelor tehnice şi standardelor europene.	**Condiţii de garanţie şi postgaranţie:** - Producătorul garantează calitatea şi buna funcţionare a produsului timp de 24 luni de la punerea în funcţiune sau de 36 luni de la data livrarii. Produsul va corespunde normelor tehnice şi standardelor europene.	
5.	**Condiţii cu caracter tehnic:** - Nu vor fi luate în consideraţie decât ofertele însoţite de documentaţie completă pentru selecţie şi montaj în limba română. - Vor fi anexate: • instrucţiuni de montaj (scheme de conectare, broşuri, cataloage); • instrucţiuni de exploatare; • buletine de încercări, verificări, probe; • declaratie de conformitate.	**Condiţii cu caracter tehnic:** - Nu vor fi luate în consideraţie decât ofertele însoţite de documentaţie completă pentru selecţie şi montaj în limba română. - Vor fi anexate: • instrucţiuni de montaj (scheme de conectare, broşuri, cataloage); • instrucţiuni de exploatare; • buletine de încercări, verificări, probe; • declaratie de conformitate.	

Fişă tehnică produs
Caracteristici

LGY412560 (22 010 44)

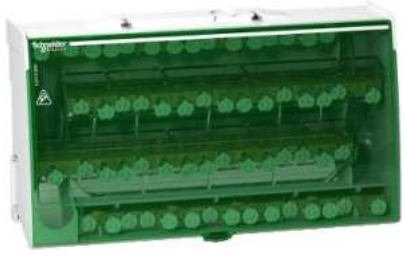

Caracteristici Principale

Gama	Linergy
Nume produs	Linergy DS
Tip produs sau componenta	Bloc de distributie

Complementare

Suport de montare	DIN rail
Compatibilitate gama	Prisma - G Prisma - P Pragma Compact Prisma - PH Prisma - Pack Spacial Kaedra TeSys
Compatibilitate produs	Spacial enclosures
Descriere poli	4P
Predecesori caseta de distributie	4 x 15 holes
[Ue] tensiune operationala nominala	230 V c.a. (Ph/N) 440 V c.a. (Ph/Ph)
[Ui] tensiune nominala de izolatie	500 V c.a.
[Uimp] tensiune de tinere la impuls	8 kV
[Ie] curent nominal de utilizare	125 A la 40 °C
[Icw] curent nominal de scurtcircuit admisibil	4.2 kA 1 s
[Ipk] curent nominal de tinere la varf	28 kA
Conexiuni - borne	Supply: borna cu surub, 1 x 10...35 mm² (rigid) Supply: borna cu surub, 1 x 6...35 mm² (flexibil) cu pin Distribution: borna cu surub, 3 x 4...25 mm² (flexibil) cu pin Distribution: borna cu surub, 11 x 1.5...16 mm² (rigid) Distribution: borna cu surub, 11 x 1.5...10 mm² (flexibil) cu pin Distribution: borna cu surub, 3 x 6...35 mm² (rigid)
Cuplu de strangere	Distribution : Ø6.5 mm, 2 N.m with flat screwdriver Distribution : Ø6.5 mm, 2 N.m with PZ2 screwdriver Supply : Ø9.5 mm, 2.5 N.m with flat screwdriver Supply : Ø9.5 mm, 2.5 N.m with PZ2 screwdriver Distribution : Ø8.5 mm, 2 N.m with flat screwdriver Distribution : Ø8.5 mm, 2 N.m with PZ2 screwdriver
Module de 9 mm	18
Inaltime	100 mm
Latime	162 mm
Adancime	50.5 mm
Greutate produs	0.562 kg
Culoare	Alb RAL 9003

Mediu

grad de poluare	3
categorie de supratensiune	III
rigiditate dielectrica	2500 V

standarde	EN/IEC 60947-7-1 EN/IEC 61439-1
temperatura ambianta pentru utilizare	-25...55 °C

Durabilitatea ofertei

Sustainable offer status	Not Green Premium product
RoHS	Compliant - since 1250 - Schneider Electric declaration of conformity

Contractual warranty

Perioada	18 luni

FISA TEHNICA E-IAD-3P+N
Întreruptor automat 3P+N cu protecție diferențială

Nr Crt.	Specificațiile tehnice impuse prin Caietul de sarcini	Corespondența propunerii tehnice cu specificațiile tehnice impuse prin Caietul de sarcini	Producător
0	1	2	3
1.	**Parametrii tehnici si funcționali:** - Număr poli: 4; - Contact auxiliar de semnalizare defect; - Contact auxiliar semnalizare închis/deschis; - Curent nominal: 10, 16; - Capacitatea de rupere: minim 6 kA, in funcție de curentul de scurtcircuit calculat in punctul respectiv; - Cod pentru curba: C, - Tensiune nominala: 230/400V; 50/60Hz-AC; - Tensiune de tinere la impuls minim 4kV - Clasa de limitare: 3; - Gradul de protecție: IP20; - Montaj: cu cleme pe șină DIN 35mm; - Domeniu de temperatura: 0° C ... +40° C - Sensibilitate: 30 mA, 300 mA funcție de locul de montaj; - Anduranța mecanica: minim 10.000 cicluri; - Anduranța electrica: minim 5.000 cicluri; - Grad de protecție minim IP20 - Protecția circuitelor împotriva curenților de scurtcircuit; - Protecția circuitelor împotriva curenților de suprasarcina; - Protecția circuitelor împotriva defectelor de izolare.	**Parametrii tehnici si funcționali:** - Număr poli: 4; - Contact auxiliar de semnalizare defect; - Contact auxiliar semnalizare închis/deschis; - Curent nominal: 10, 16; - Capacitatea de rupere: minim 6 kA, in funcție de curentul de scurtcircuit calculat in punctul respectiv; - Cod pentru curba: C, - Tensiune nominala: 230/400V; 50/60Hz-AC; - Tensiune de tinere la impuls minim 4kV - Clasa de limitare: 3; - Gradul de protecție: IP20; - Montaj: cu cleme pe șină DIN 35mm; - Domeniu de temperatura: 0° C ... +40° C - Sensibilitate: 30 mA, 300 mA funcție de locul de montaj; - Anduranța mecanica: minim 10.000 cicluri; - Anduranța electrica: minim 5.000 cicluri; - Grad de protecție minim IP20 - Protecția circuitelor împotriva curenților de scurtcircuit; - Protecția circuitelor împotriva curenților de suprasarcina; - Protecția circuitelor împotriva defectelor de izolare.	SCHNEIDER
2.	**Specificaţii de performanţă şi condiţii privind siguranta în exploatare:** - Protecția terminalelor la atingere cu mana. - Carcasa din material ABS; - Parte frontala clasa 2	**Specificaţii de performanţă şi condiţii privind siguranta în exploatare:** - Protecția terminalelor la atingere cu mana. - Carcasa din material ABS; - Parte frontala clasa 2	
3.	**Conditii privind conformitatea cu standarde relevante:** - SR EN 61009 - SR EN 60529	**Conditii privind conformitatea cu standarde relevante:** - SR EN 61009 - SR EN 60529	
4.	**Condiţii de garanţie şi postgaranţie:** - Producătorul va garanta calitatea şi buna funcţionare a produsului timp de 24 luni de la punerea în funcţiune sau de 36 luni de la data	**Condiţii de garanţie şi postgaranţie:** - Producătorul va garanta calitatea şi buna funcţionare a produsului timp de 24 luni de la punerea în funcţiune sau de 36 luni de la data	

	livrarii. - Produsul va corespunde normelor tehnice şi standardelor europene.	livrarii. - Produsul va corespunde normelor tehnice şi standardelor europene.	
5.	**Condiţii cu caracter tehnic:** - Nu vor fi luate în consideraţie decât ofertele însoţite de documentaţie completă pentru selecţie şi montaj în limba română. - Vor fi anexate: ▪ instrucţiuni de montaj (scheme de conectare, broşuri, cataloage); ▪ instrucţiuni de exploatare; ▪ buletine de încercări, verificări, probe; ▪ declaratie de conformitate.	**Condiţii cu caracter tehnic:** - Nu vor fi luate în consideraţie decât ofertele însoţite de documentaţie completă pentru selecţie şi montaj în limba română. - Vor fi anexate: ▪ instrucţiuni de montaj (scheme de conectare, broşuri, cataloage); ▪ instrucţiuni de exploatare; ▪ buletine de încercări, verificări, probe; ▪ declaratie de conformitate.	

Fişă tehnică produs

Specificatii

Acti9, iCV40N 3P+N C 10A 6kA 30mA AC RCBO

A9DE3710

Principal

Gama	Acti9
Nume produs	Acti9 iCV40
Tip produs sau componenta	Residual current breaker with overcurrent protection (RCBO)
Nume scurt al dispozitivului	iCV40N
Domeniu de utilizare al dispozitivului	Distributie
Descriere poli	3P + N
Numarul polilor protejati	3
Pozitie neutrului	Stanga
[In] calibru	10 A
Tip retea electrica	C.a.
Tehnologie unitate de declansare	Termo-magnetic
Cod pentru curba	C
Sensibilitate legatura de punere la pamant	30 mA
Temporizare protectie pentru scurgeri la pamant	Instantaneu
Clasa de protectie pentru scurgeri la pamant	Type AC
Capacitate de rupere	6000 A Icn la 400 V c.a. 50/60 Hz conformitate cu EN/IEC 61009-2-1
Adecvare pentru izolatie	Da conformitate cu SR EN 60947-2
Etichete privind calitatea	EAC IMQ

Suplimentar

Locatia dispozitivului in sistem	Iesire
Frecventa retea electrica	50/60 Hz
[Ue] tensiune nominala de functionare	400 V c.a. 50/60 Hz
Limita de declansare magnetica	5...10 x In
Releu de declansare pentru curent rezidual	Independent de tensiune

[Ics] capacitatea nominala de rupere in serviciu	6000 A 100 % x Icn la 400 V c.a. 50/60 Hz conformitate cu EN/IEC 61009-2-1
Capacitatea de cuplare si capacitatea de rupere nominale	Idm 3000 A la 400 V c.a. 50/60 Hz conformitate cu EN/IEC 61009-2-1
Clasa de limitare	3 conformitate cu EN/IEC 61009-2-1
[Ui] tensiune nominala de izolatie	440 V c.a. 50/60 Hz
[Uimp] tensiune nominala de tinere la impuls	4 kV
Indicator de pozitie contact	Da
Tip de control	Comutare
Semnalizare locala	Fault indication Indicatie ON/OFF
Mod de montare	Clipsabil
Suport de montare	Sina DIN
Pieptene bare de distributie pe categorii de compatibilitate	Sus sau jos tooth
Pasul de conectare	18 mm between phases 9 mm intre faza si neutru
Pasi de 9 mm	10
Inaltime	93 mm
Latime	90 mm
Adancime	73 mm
Greutate neta	500 g
Culoare	Alb
Durabilitate mecanica	20000 cic
Durabilitate electrica	20000 cic
Descriere optiuni de blocare	Sigilabil Padlocking device
Conexiuni - borne	Borne tip tunel sus sau jos1…16 mm² rigid Borne tip tunel sus sau jos1…10 mm² flexibil
Lungimea de dezizolare a cablului	14 mm pentru sus sau jos conectare
Cuplu de strangere	2 N.m sus sau jos
Protectie de scurgere la pamant	Inglobat

Mediu

Standarde	EN/IEC 61009-2-1
Certificari produs	UE
Grad de protectie IP	IP20 conforming to SR EN 60529 IP40 (carcasa modulara) conforming to SR EN 60529
Grad de poluare	3
Categorie de supratensiune	III conformitate cu IEC 60364
Compatibilitate electromagnetica	8/20 µs ținere la impuls, 250 A conformitate cu EN/IEC 61009-1
Umiditate relativa	95 % la 55 °C
Altitudine de functionare	2000 m
Temperatura ambientala de utilizare	-5…60 °C
Temperatura de depozitare	-40…85 °C

Unitati de ambalare

Unitate de masura pentru prima forma de impachetare	PCE
Numar unitati in prima forma de impachetare	1
Inaltime prima forma de impachetare	8,8 cm
Latime prima forma de impachetare	11,2 cm
Lungime prima forma de impachetare	12,5 cm
Greutate prima forma de impachetare	567,0 g
Unitate de masura pentru a doua forma de impachetare	S03
Numar unitati in a doua forma de impachetare	16
Inaltime a doua forma de impachetare	30,0 cm
Latime a doua forma de impachetare	30,0 cm
Lungime a doua forma de impachetare	40,0 cm
Greutate a doua forma de impachetare	9,512 kg

Sustenabilitatea ofertei

Stare ofertă sustenabilă	Produs Green Premium
Regulamentul REACH	Declaratia REACH
Directiva RoHS UE	Conform Declaratia RoHS UE
Fara mercur	Da
Informatii privind scutirea de la RoHS	Da
Regulamentul RoHS China	Declaratia RoHS China Produs in afara domeniului de aplicare a RoHS China. Declaratia privind substantele in scop informativ.
Raport de mediu	Profilul ambiental al produsului
WEEE	În Uniunea Europeana, produsele trebuie reciclate respectand sistemul specific de colectare a deseurilor si nu trebuie sa ajunga in pubelele de colectare a deseurilor menajere.
Prezenta halogen	Produs cu piese din plastic si cabluri fara halogen

Garanţie contractuala

Garantie	18 luni

Substitutii recomandate

Fişă tehnică produs

Specificatii

Acti9, iCV40N 3P+N C 16A 6kA 30mA AC RCBO

A9DE3716

Principal

Gama	Acti9
Nume produs	Acti9 iCV40
Tip produs sau componenta	Residual current breaker with overcurrent protection (RCBO)
Nume scurt al dispozitivului	iCV40N
Domeniu de utilizare al dispozitivului	Distributie
Descriere poli	3P + N
Numarul polilor protejati	3
Pozitie neutrului	Stanga
[In] calibru	16 A
Tip retea electrica	C.a.
Tehnologie unitate de declansare	Termo-magnetic
Cod pentru curba	C
Sensibilitate legatura de punere la pamant	30 mA
Temporizare protectie pentru scurgeri la pamant	Instantaneu
Clasa de protectie pentru scurgeri la pamant	Type AC
Capacitate de rupere	6000 A Icn la 400 V c.a. 50/60 Hz conformitate cu EN/IEC 61009-2-1
Adecvare pentru izolatie	Da conformitate cu SR EN 60947-2
Etichete privind calitatea	EAC IMQ

Suplimentar

Locatia dispozitivului in sistem	Iesire
Frecventa retea electrica	50/60 Hz
[Ue] tensiune nominala de functionare	400 V c.a. 50/60 Hz
Limita de declansare magnetica	5...10 x In
Releu de declansare pentru curent rezidual	Independent de tensiune

[Ics] capacitatea nominala de rupere in serviciu	6000 A 100 % x Icn la 400 V c.a. 50/60 Hz conformitate cu EN/IEC 61009-2-1
Capacitatea de cuplare si capacitatea de rupere nominale	Idm 3000 A la 400 V c.a. 50/60 Hz conformitate cu EN/IEC 61009-2-1
Clasa de limitare	3 conformitate cu EN/IEC 61009-2-1
[Ui] tensiune nominala de izolatie	440 V c.a. 50/60 Hz
[Uimp] tensiune nominala de tinere la impuls	4 kV
Indicator de pozitie contact	Da
Tip de control	Comutare
Semnalizare locala	Fault indication Indicatie ON/OFF
Mod de montare	Clipsabil
Suport de montare	Sina DIN
Pieptene bare de distributie pe categorii de compatibilitate	Sus sau jos tooth
Pasul de conectare	18 mm between phases 9 mm intre faza si neutru
Pasi de 9 mm	10
Inaltime	93 mm
Latime	90 mm
Adancime	73 mm
Greutate neta	500 g
Culoare	Alb
Durabilitate mecanica	20000 cic
Durabilitate electrica	20000 cic
Descriere optiuni de blocare	Padlocking device Sigilabil
Conexiuni - borne	Borne tip tunel sus sau jos1…16 mm² rigid Borne tip tunel sus sau jos1…10 mm² flexibil
Lungimea de dezizolare a cablului	14 mm pentru sus sau jos conectare
Cuplu de strangere	2 N.m sus sau jos
Protectie de scurgere la pamant	Inglobat

Mediu

Standarde	EN/IEC 61009-2-1
Certificari produs	UE
Grad de protectie IP	IP20 conforming to SR EN 60529 IP40 (carcasa modulara) conforming to SR EN 60529
Grad de poluare	3
Categorie de supratensiune	III conformitate cu IEC 60364
Compatibilitate electromagnetica	8/20 µs ținere la impuls, 250 A conformitate cu EN/IEC 61009-1
Umiditate relativa	95 % la 55 °C
Altitudine de functionare	2000 m
Temperatura ambientala de utilizare	-5…60 °C
Temperatura de depozitare	-40…85 °C

Unitati de ambalare

Unitate de masura pentru prima forma de impachetare	PCE
Numar unitati in prima forma de impachetare	1
Inaltime prima forma de impachetare	8,8 cm
Latime prima forma de impachetare	11,2 cm
Lungime prima forma de impachetare	12,5 cm
Greutate prima forma de impachetare	567,0 g
Unitate de masura pentru a doua forma de impachetare	S03
Numar unitati in a doua forma de impachetare	16
Inaltime a doua forma de impachetare	30,0 cm
Latime a doua forma de impachetare	30,0 cm
Lungime a doua forma de impachetare	40,0 cm
Greutate a doua forma de impachetare	9,509 kg

Sustenabilitatea ofertei

Stare ofertă sustenabilă	Produs Green Premium
Regulamentul REACH	Declaratia REACH
Directiva RoHS UE	Conform Declaratia RoHS UE
Fara mercur	Da
Informatii privind scutirea de la RoHS	Da
Regulamentul RoHS China	Declaratia RoHS China Produs in afara domeniului de aplicare a RoHS China. Declaratia privind substantele in scop informativ.
Raport de mediu	Profilul ambiental al produsului
WEEE	În Uniunea Europeana, produsele trebuie reciclate respectand sistemul specific de colectare a deseurilor si nu trebuie sa ajunga in pubelele de colectare a deseurilor menajere.
Prezenta halogen	Produs cu piese din plastic si cabluri fara halogen

Garanţie contractuala

Garantie	18 luni

Substitutii recomandate

Fişă tehnică produs

Specificatii

Acti9, iCV40N 3P+N C 10A 6kA 300mA AC RCBO

A9DE7710

Principal

Gama	Acti9
Nume produs	Acti9 iCV40
Tip produs sau componenta	Residual current breaker with overcurrent protection (RCBO)
Nume scurt al dispozitivului	iCV40N
Domeniu de utilizare al dispozitivului	Distributie
Descriere poli	3P + N
Numarul polilor protejati	3
Pozitie neutrului	Stanga
[In] calibru	10 A
Tip retea electrica	C.a.
Tehnologie unitate de declansare	Termo-magnetic
Cod pentru curba	C
Sensibilitate legatura de punere la pamant	300 mA
Temporizare protectie pentru scurgeri la pamant	Instantaneu
Clasa de protectie pentru scurgeri la pamant	Type AC
Capacitate de rupere	6000 A Icn la 400 V c.a. 50/60 Hz conformitate cu EN/IEC 61009-2-1
Adecvare pentru izolatie	Da conformitate cu SR EN 60947-2
Etichete privind calitatea	VDE EAC

Suplimentar

Locatia dispozitivului in sistem	Iesire
Frecventa retea electrica	50/60 Hz
[Ue] tensiune nominala de functionare	400 V c.a. 50/60 Hz
Limita de declansare magnetica	5...10 x In
Releu de declansare pentru curent rezidual	Independent de tensiune

[Ics] capacitatea nominala de rupere in serviciu	6000 A 100 % x Icn la 400 V c.a. 50/60 Hz conformitate cu EN/IEC 61009-2-1
Capacitatea de cuplare si capacitatea de rupere nominale	Idm 3000 A la 400 V c.a. 50/60 Hz conformitate cu EN/IEC 61009-2-1
Clasa de limitare	3 conformitate cu EN/IEC 61009-2-1
[Ui] tensiune nominala de izolatie	440 V c.a. 50/60 Hz
[Uimp] tensiune nominala de tinere la impuls	4 kV
Indicator de pozitie contact	Da
Tip de control	Comutare
Semnalizare locala	Indicatie ON/OFF Fault indication
Mod de montare	Clipsabil
Suport de montare	Sina DIN
Pieptene bare de distributie pe categorii de compatibilitate	Sus sau jos tooth
Pasul de conectare	18 mm between phases 9 mm intre faza si neutru
Pasi de 9 mm	10
Inaltime	93 mm
Latime	90 mm
Adancime	73 mm
Greutate neta	500 g
Culoare	Alb
Durabilitate mecanica	20000 cic
Durabilitate electrica	20000 cic
Descriere optiuni de blocare	Sigilabil Padlocking device
Conexiuni - borne	Borne tip tunel sus sau jos1…16 mm² rigid Borne tip tunel sus sau jos1…10 mm² flexibil
Lungimea de dezizolare a cablului	14 mm pentru sus sau jos conectare
Cuplu de strangere	2 N.m sus sau jos
Protectie de scurgere la pamant	Inglobat

Mediu

Standarde	EN/IEC 61009-2-1
Certificari produs	UE
Grad de protectie IP	IP20 conforming to SR EN 60529 IP40 (carcasa modulara) conforming to SR EN 60529
Grad de poluare	3
Categorie de supratensiune	III conformitate cu IEC 60364
Compatibilitate electromagnetica	8/20 µs ținere la impuls, 250 A conformitate cu EN/IEC 61009-1
Umiditate relativa	95 % la 55 °C
Altitudine de functionare	2000 m
Temperatura ambientala de utilizare	-5…60 °C
Temperatura de depozitare	-40…85 °C

Unitati de ambalare

Unitate de masura pentru prima forma de impachetare	PCE
Numar unitati in prima forma de impachetare	1
Inaltime prima forma de impachetare	8,7 cm
Latime prima forma de impachetare	11,2 cm
Lungime prima forma de impachetare	12,5 cm
Greutate prima forma de impachetare	544,0 g
Unitate de masura pentru a doua forma de impachetare	S03
Numar unitati in a doua forma de impachetare	16
Inaltime a doua forma de impachetare	30,0 cm
Latime a doua forma de impachetare	30,0 cm
Lungime a doua forma de impachetare	40,0 cm
Greutate a doua forma de impachetare	9,156 kg

Sustenabilitatea ofertei

Stare ofertă sustenabilă	Produs Green Premium
Regulamentul REACH	Declaratia REACH
Directiva RoHS UE	Conform Declaratia RoHS UE
Fara mercur	Da
Informatii privind scutirea de la RoHS	Da
Regulamentul RoHS China	Declaratia RoHS China Produs in afara domeniului de aplicare a RoHS China. Declaratia privind substantele in scop informativ.
Raport de mediu	Profilul ambiental al produsului
WEEE	În Uniunea Europeana, produsele trebuie reciclate respectand sistemul specific de colectare a deseurilor si nu trebuie sa ajunga in pubelele de colectare a deseurilor menajere.
Prezenta halogen	Produs cu piese din plastic si cabluri fara halogen

Garanţie contractuala

Garantie	18 luni

Substitutii recomandate

Fişă tehnică produs

Specificatii

Acti9, iCV40N 3P+N C 16A 6kA 300mA AC RCBO

A9DE7716

Principal

Gama	Acti9
Nume produs	Acti9 iCV40
Tip produs sau componenta	Residual current breaker with overcurrent protection (RCBO)
Nume scurt al dispozitivului	iCV40N
Domeniu de utilizare al dispozitivului	Distributie
Descriere poli	3P + N
Numarul polilor protejati	3
Pozitie neutrului	Stanga
[In] calibru	16 A
Tip retea electrica	C.a.
Tehnologie unitate de declansare	Termo-magnetic
Cod pentru curba	C
Sensibilitate legatura de punere la pamant	300 mA
Temporizare protectie pentru scurgeri la pamant	Instantaneu
Clasa de protectie pentru scurgeri la pamant	Type AC
Capacitate de rupere	6000 A Icn la 400 V c.a. 50/60 Hz conformitate cu EN/IEC 61009-2-1
Adecvare pentru izolatie	Da conformitate cu SR EN 60947-2
Etichete privind calitatea	EAC VDE

Suplimentar

Locatia dispozitivului in sistem	Iesire
Frecventa retea electrica	50/60 Hz
[Ue] tensiune nominala de functionare	400 V c.a. 50/60 Hz
Limita de declansare magnetica	5...10 x In
Releu de declansare pentru curent rezidual	Independent de tensiune

[Ics] capacitatea nominala de rupere in serviciu	6000 A 100 % x Icn la 400 V c.a. 50/60 Hz conformitate cu EN/IEC 61009-2-1
Capacitatea de cuplare si capacitatea de rupere nominale	Idm 3000 A la 400 V c.a. 50/60 Hz conformitate cu EN/IEC 61009-2-1
Clasa de limitare	3 conformitate cu EN/IEC 61009-2-1
[Ui] tensiune nominala de izolatie	440 V c.a. 50/60 Hz
[Uimp] tensiune nominala de tinere la impuls	4 kV
Indicator de pozitie contact	Da
Tip de control	Comutare
Semnalizare locala	Fault indication Indicatie ON/OFF
Mod de montare	Clipsabil
Suport de montare	Sina DIN
Pieptene bare de distributie pe categorii de compatibilitate	Sus sau jos tooth
Pasul de conectare	18 mm between phases 9 mm intre faza si neutru
Pasi de 9 mm	10
Inaltime	93 mm
Latime	90 mm
Adancime	73 mm
Greutate neta	500 g
Culoare	Alb
Durabilitate mecanica	20000 cic
Durabilitate electrica	20000 cic
Descriere optiuni de blocare	Sigilabil Padlocking device
Conexiuni - borne	Borne tip tunel sus sau jos1…16 mm² rigid Borne tip tunel sus sau jos1…10 mm² flexibil
Lungimea de dezizolare a cablului	14 mm pentru sus sau jos conectare
Cuplu de strangere	2 N.m sus sau jos
Protectie de scurgere la pamant	Inglobat

Mediu

Standarde	EN/IEC 61009-2-1
Certificari produs	UE
Grad de protectie IP	IP20 conforming to SR EN 60529 IP40 (carcasa modulara) conforming to SR EN 60529
Grad de poluare	3
Categorie de supratensiune	III conformitate cu IEC 60364
Compatibilitate electromagnetica	8/20 µs ținere la impuls, 250 A conformitate cu EN/IEC 61009-1
Umiditate relativa	95 % la 55 °C
Altitudine de functionare	2000 m
Temperatura ambientala de utilizare	-5…60 °C
Temperatura de depozitare	-40…85 °C

Unitati de ambalare

Unitate de masura pentru prima forma de impachetare	PCE
Numar unitati in prima forma de impachetare	1
Inaltime prima forma de impachetare	8,8 cm
Latime prima forma de impachetare	11,2 cm
Lungime prima forma de impachetare	12,5 cm
Greutate prima forma de impachetare	548,0 g
Unitate de masura pentru a doua forma de impachetare	S03
Numar unitati in a doua forma de impachetare	16
Inaltime a doua forma de impachetare	30,0 cm
Latime a doua forma de impachetare	30,0 cm
Lungime a doua forma de impachetare	40,0 cm
Greutate a doua forma de impachetare	9,23 kg

Sustenabilitatea ofertei

Stare ofertă sustenabilă	Produs Green Premium
Regulamentul REACH	Declaratia REACH
Directiva RoHS UE	Conform Declaratia RoHS UE
Fara mercur	Da
Informatii privind scutirea de la RoHS	Da
Regulamentul RoHS China	Declaratia RoHS China Produs in afara domeniului de aplicare a RoHS China. Declaratia privind substantele in scop informativ.
Raport de mediu	Profilul ambiental al produsului
WEEE	În Uniunea Europeana, produsele trebuie reciclate respectand sistemul specific de colectare a deseurilor si nu trebuie sa ajunga in pubelele de colectare a deseurilor menajere.
Prezenta halogen	Produs cu piese din plastic si cabluri fara halogen

Garanţie contractuala

Garantie	18 luni

Substitutii recomandate

FISA TEHNICA E-ID-3P+N
Intreruptor 3P+N cu protectie Diferentiala

Nr Crt.	Specificațiile tehnice impuse prin Caietul de sarcini	Corespondența propunerii tehnice cu specificațiile tehnice impuse prin Caietul de sarcini	Producător
0	1	2	3
1.	**Parametrii tehnici si funcționali:** - Număr poli: 4; - Contact auxiliar de semnalizare defect; - Contact auxiliar semnalizare închis/deschis; - Curent nominal: 25 A; - Capacitatea de rupere: minim 6 kA, in funcție de curentul de scurtcircuit calculat in punctul respectiv; - Tensiune nominala: 230/400V; 50/60Hz-AC; - Tensiune de tinere la impuls minim 4kV - Clasa de limitare: 3; - Gradul de protecție: IP20; - Montaj: cu cleme pe șină DIN 35mm; - Domeniu de temperatura: 0° C ... +40° C - Sensibilitate: 300 mA, - Anduranța mecanica: minim 10.000 cicluri; - Anduranța electrica: minim 5.000 cicluri; - Grad de protecție minim IP20 - Protecția circuitelor împotriva defectelor de izolare.	**Parametrii tehnici si funcționali:** - Număr poli: 4; - Contact auxiliar de semnalizare defect; - Contact auxiliar semnalizare închis/deschis; - Curent nominal: 25 A; - Capacitatea de rupere: minim 6 kA, in funcție de curentul de scurtcircuit calculat in punctul respectiv; - Tensiune nominala: 230/400V; 50/60Hz-AC; - Tensiune de tinere la impuls minim 4kV - Clasa de limitare: 3; - Gradul de protecție: IP20; - Montaj: cu cleme pe șină DIN 35mm; - Domeniu de temperatura: 0° C ... +40° C - Sensibilitate: 300 mA, - Anduranța mecanica: minim 20.000 cicluri; - Anduranța electrica: minim 20.000 cicluri; - Grad de protecție minim IP20 - Protecția circuitelor împotriva defectelor de izolare.	SCHNEIDER
2.	**Specificaţii de performanţă şi condiţii privind siguranta în exploatare**: - Protecția terminalelor la atingere cu mana - Carcasa din material ABS - Parte frontala clasa 2	**Specificaţii de performanţă şi condiţii privind siguranta în exploatare**: - Protecția terminalelor la atingere cu mana - Carcasa din material ABS - Parte frontala clasa 2	
3.	**Conditii privind conformitatea cu standarde relevante:** - SR EN 61009 - SR EN 60529	**Conditii privind conformitatea cu standarde relevante:** - SR EN 61009 - SR EN 60529	
4.	**Condiţii de garanţie şi postgaranţie:** - Producătorul va garanta calitatea şi buna funcţionare a produsului timp de 24 luni de la punerea în funcţiune sau de 36 luni de la data livrarii. - Produsul va corespunde normelor tehnice şi standardelor europene.	**Condiţii de garanţie şi postgaranţie:** - Producătorul garantează calitatea şi buna funcţionare a produsului timp de 24 luni de la punerea în funcţiune sau de 36 luni de la data livrarii. - Produsul va corespunde normelor tehnice şi standardelor europene.	
5.	**Condiţii cu caracter tehnic:** - Nu vor fi luate în consideraţie decât ofertele însoţite de documentaţie completă pentru selecţie şi montaj în limba română. - Vor fi anexate:	**Condiţii cu caracter tehnic:** - Nu vor fi luate în consideraţie decât ofertele însoţite de documentaţie completă pentru selecţie şi montaj în limba română. - Vor fi anexate:	

	▪ instrucţiuni de montaj (scheme de conectare, broşuri, cataloage); ▪ instrucţiuni de exploatare; ▪ buletine de încercări, verificări, probe; ▪ declaratie de conformitate.	▪ instrucţiuni de montaj (scheme de conectare, broşuri, cataloage); ▪ instrucţiuni de exploatare; ▪ buletine de încercări, verificări, probe; ▪ declaratie de conformitate.	

Fişă tehnică produs

Specificatii

Acti9, iCV40N 3P+N C 25A 6kA 300mA AC RCBO

A9DE7725

Principale

Gama	Acti 9
nume produs	Acti9 iCV40
Tip produs sau componenta	Residual current breaker with overcurrent protection (RCBO)
nume scurt al dispozitivului	iCV40N
aplicatie a dispozitivului	Distributie
descriere poli	3P + N
numarul polilor protejati	3
pozitie neutrului	Stanga
[In] curent nominal	25 A
Tip retea electrica	C.a.
tehnologie unitate de declansare	Termo-magnetic
cod pentru curba	C
sensibilitate legatura de punere la pamant	300 mA
temporizare protectie pentru scurgeri la pamant	Instantaneu
clasa de protectie pentru scurgeri la pamant	Type AC
capacitate de rupere	6000 A Icn la 400 V c.a. 50/60 Hz conformitate cu EN/IEC 61009-2-1
adecvare pentru izolatie	Da conformitate cu SR EN 60947-2
etichete privind calitatea	EAC VDE

Suplimentare

Complementary	Iesire
frecventa retea electrica	50/60 Hz
[Ue] tensiune nominala de functionare	400 V c.a. 50/60 Hz
limita de declansare magnetica	5...10 x In
releu de declansare pentru curent rezidual	Independent de tensiune
[Ics] capacitatea nominala de rupere in serviciu	6000 A 100 % x Icn la 400 V c.a. 50/60 Hz conformitate cu EN/IEC 61009-2-1
capacitatea de cuplare si capacitatea de rupere nominale	Idm 3000 A la 400 V c.a. 50/60 Hz conformitate cu EN 61009-2-1 Idm 500 A la 400 V c.a. 50/60 Hz conformitate cu IEC 61009-2-1
clasa de limitare	3 conformitate cu EN/IEC 61009-2-1
[Ui] tensiune nominala de izolatie	440 V c.a. 50/60 Hz

[Uimp] tensiune nominala de tinere la impuls	4 kV
indicator de pozitie contact	Da
tip de control	Comutare
semnalizare locala	Fault indication Indicatie ON/OFF
mod de montare	Clipsabil
suport de montare	Sina DIN
pieptene bare de distributie pe categorii de compatibilitate	Sus sau jos tooth
pasul de conectare	18 mm between phases 9 mm intre faza si neutru
Numar de pasi de 9mm pe rand	10
inaltime	93 mm
latime	90 mm
adancime	73 mm
greutate neta	500 g
culoare	Alb
durabilitate mecanica	20000 cic
durabilitate electrica	20000 cic
descriere optiuni de blocare	Dispozitiv de blocare Sigilabil
conexiuni - borne	Borne tip tunel sus sau jos1…16 mm² rigid Borne tip tunel sus sau jos1…10 mm² flexibil
lungimea de dezizolare a cablului	14 mm for sus sau jos connection
cuplu de strangere	2 N.m sus sau jos
protectie de scurgere la pamant	Inglobat

Mediu

Standarde	EN/IEC 61009-2-1
certificari produs	UE
grad de protectie IP	IP20 conforming to SR EN 60529 IP40 (carcasa modulara) conforming to SR EN 60529
grad de poluare	3
categorie de supratensiune	III conformitate cu IEC 60364
compatibilitate electromagnetica	8/20 µs ținere la impuls, 250 A conformitate cu EN/IEC 61009-1
umiditate relativa	95 % la 55 °C
altitudine de functionare	2000 m
temperatura ambientala de utilizare	-5…60 °C
temperatura ambietala pentru depozitare	-40…85 °C

Unitati de ambalare

Unitate de masura pentru prima forma de impachetare	PCE
Numar unitati in prima forma de impachetare	1
Inaltime prima forma de impachetare	8,500 cm

Latime prima forma de impachetare	11,200 cm
Lungime prima forma de impachetare	12,500 cm
Greutate prima forma de impachetare	546,000 g
Unitate de masura pentru a doua forma de impachetare	S03
Numar unitati in a doua forma de impachetare	16
Inaltime a doua forma de impachetare	30,000 cm
Latime a doua forma de impachetare	30,000 cm
Lungime a doua forma de impachetare	40,000 cm
Greutate a doua forma de impachetare	9,395 kg

Garantie contractuala

Garantie	18 luni

Sustenabilitate

Eticheta **Green Premium™** reprezinta angajamentul Schneider Electric de a livra produse cu cea mai buna performanta de mediu din clasa lor. Green Premium promite respectarea celor mai recente reglementari, transparenta in ceea ce priveste impactul asupra mediului, precum si produse circulare si cu emisii reduse de CO_2.

Ghidul pentru evaluarea sustenabilitatii produsului este un ghid care clarifica standardele globale de eticheta ecologica si modul de interpretare a declaratiilor de mediu.

Cum evaluam sustenabilitatea produselor >

Echipament sustenabil

Fara Mercur

Informatii Exceptare Rohs	Da

Regulamentul Reach	Declaratia REACH
Directiva Rohs Ue	Conform cu scutirile
Regulamentul Rohs China	Declaratia RoHS China Produs care nu se afla sub incidenta RoHS China. Declarație de substanțe pentru informarea dvs.
Deee	Produsul trebuie sa fie eliminat de pe piata din Uniunea Europeana dupa colectarea specifica a deseurilor si sa nu ajunga niciodata in pubele de gunoi
Numar Scip	68d36cfc-4a9f-4fb1-86e1-1d28b1c3c5d6

FIȘĂ TEHNICĂ E-IAD-2P - Întreruptor automat cu protecție diferențială 2P

Nr Crt.	Specificațiile tehnice impuse prin Caietul de sarcini	Corespondența propunerii tehnice cu specificațiile tehnice impuse prin Caietul de sarcini	Producător
0	1	2	3
1.	**Parametrii tehnici şi functionali:** - Număr poli: 2; - Curent nominal: 6, 10, 16 A, - Contact auxiliar de semnalizare defect; - Contact auxiliar semnalizare închis/deschis; - Capacitatea de rupere: 6kA; - Cod pentru curba: C; - Tensiune nominal: 230V; 50/60Hz AC; - Tensiune de tinere la impuls minim 4kV - Clasa de limitare: 3; - Gradul de protecție: IP20; - Montaj: cu cleme pe șină DIN 35mm; - Domeniu de temperatura: 0°C ... +40° C - Sensibilitate: 30 mA, 300 mA funcție de proiect; - Anduranță mecanica: minim 10.000 cicluri; - Anduranță electrica: minim 5.000 cicluri;	**Parametrii tehnici şi functionali:** - Număr poli: 2; - Curent nominal: 6, 10, 16 A, - Contact auxiliar de semnalizare defect; - Contact auxiliar semnalizare închis/deschis; - Capacitatea de rupere: 6kA; - Cod pentru curba: C; - Tensiune nominal: 230V; 50/60Hz AC; - Tensiune de tinere la impuls minim 4kV - Clasa de limitare: 3; - Gradul de protecție: IP20; - Montaj: cu cleme pe șină DIN 35mm; - Domeniu de temperatura: 0°C ... +40° C - Sensibilitate: 30 mA, 300 mA funcție de proiect; - Anduranță mecanica: minim 10.000 cicluri; - Anduranță electrica: minim 5.000 cicluri;	**BTCINO**
2.	**Specificaţii de performanţă şi condiţii privind siguranta în exploatare:** - Alimentarea se poate realiza atât pe sus, cat si pe jos; - Borne sus si jos cu cap fix si brida culisantă: - Protecția terminalelor la atingere cu mana. - Carcasa din material ABS	**Specificaţii de performanţă şi condiţii privind siguranta în exploatare:** - Alimentarea se poate realiza atât pe sus, cat si pe jos; - Borne sus si jos cu cap fix si brida culisantă: - Protecția terminalelor la atingere cu mana. - Carcasa din material ABS	
3.	**Conditii privind conformitatea cu standarde relevante:** - SR EN 61009 - SR EN 60529	**Conditii privind conformitatea cu standarde relevante:** - SR EN 61009 - SR EN 60529	
4.	**Condiţii de garanţie şi postgaranţie:** - Producătorul va garanta calitatea şi buna funcţionare a produsului timp de 24 luni de la punerea în funcţiune sau de 36 luni de la data livrarii. - Produsul va corespunde normelor tehnice şi standardelor europene.	**Condiţii de garanţie şi postgaranţie:** - Producătorul garantează calitatea şi buna funcţionare a produsului timp de 24 luni de la punerea în funcţiune sau de 36 luni de la data livrarii. - Produsul va corespunde normelor tehnice şi standardelor europene.	
5.	**Condiţii cu caracter tehnic:** - Nu vor fi luate în consideraţie decât ofertele însoţite de documentaţie completă pentru selecţie şi montaj în limba română.	**Condiţii cu caracter tehnic:** - Nu vor fi luate în consideraţie decât ofertele însoţite de documentaţie completă pentru selecţie şi montaj în limba română.	

	- Vor fi anexate: ▪ instrucţiuni de montaj (scheme de conectare, broşuri, cataloage); ▪ instrucţiuni de exploatare; ▪ buletine de încercări, verificări, probe; ▪ declaratie de conformitate.	- Vor fi anexate: ▪ instrucţiuni de montaj (scheme de conectare, broşuri, cataloage); ▪ instrucţiuni de exploatare; ▪ buletine de încercări, verificări, probe; ▪ declaratie de conformitate.	

Viale Borri 231
21100 Varese, Italy

BTDIN 60 RCBO Phase + Neutral up to 40A (2 modules)

Cat n° (s): GN8813A···, GN8813AC···, GN8814A···, GN8814AC···, GN8813F···

Content PAGE

1. DESCRIPTION - USE

. Residual Current Operated Circuit Breaker (RCBO) with positive contact indication for control, protection against short circuits and overload and isolation of electrical circuits, protecting people from direct and indirect contacts and protecting installations from insulation faults.

Symbol:

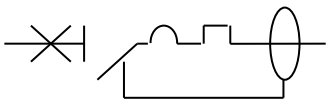

Technology:

. Energy limiting circuit-breaker
. The Neutral contact closes before and opens after the Phase contact
. The phase pole provides protection and isolation for the phase circuit
. The neutral pole provides isolation for the neutral circuit

2. RANGE

Polarity:

. 2 poles including 1 protected pole and 1 neutral pole. 2 module wide (2 * 17,8mm)

Rated currents In:

. 2/ 3 / 4 / 6 / 10 / 16 / 20 / 25 / 32 / 40 A

Instantaneous tripping characteristics according to IEC/EN 61009-1:

. C type (tripping threshold between 5 In and 10 In)

Rated breaking capacity and rated voltage:

. 6000 A / 230 V~ according to IEC/EN 61009-1

Rated frequency:

. 50 Hz

2. RANGE *(continued)*

Energy limitation class:

. 3

Residual current Type:

. AC (residual sinusoidal alternating currents)
. A (residual sinusoidal alternating currents and residual pulsating direct currents)
. F (additional immunity to unwanted tripping and detection of high frequency fault currents).

Residual current sensitivity:

. 30 mA - instantaneous
. 300 mA - instantaneous

3. OVERALL DIMENSIONS

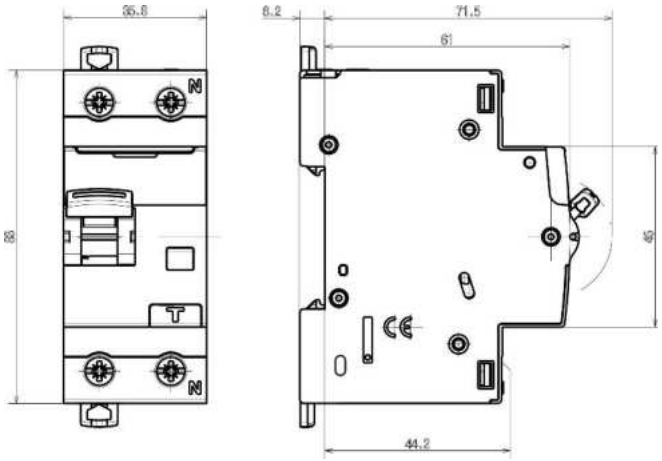

4. PREPARATION - CONNECTION

Mounting:

. On 35 mm symmetrical rail EN/IEC 60715

Operating position:

Vertical Horizontal Upside down On the side

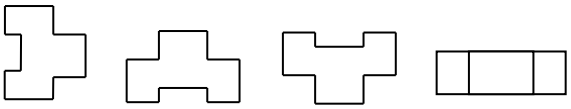

Power supply:

. Either from the top or the bottom
. Upper terminals: pin busbar
. Lower terminals: pin or fork busbar.

Maintenance:

. A RCBO may be replaced in the middle of a row supplied with busbars without disconnecting the other products

Connection:

. Inputs and outputs via screw terminals
. Terminals fitted with shutters preventing a cable being placed under the terminal, with the terminal partly open or closed

Terminal depth:

. 14 mm

Stripping length recommended:

. 11 mm

Screw head:

. Mixed, slotted and Pozidriv 2.

Tightening torque:

. Recommended: 2.5 Nm.

. Min: 1.2 Nm. Max: 3.5 Nm.

Tools required:

. For the terminals: Pozidriv n° 2 or flat screwdriver 5.5 mm (6.5 mm maximum).

. For fixing (din rail clamps): Pozidriv n° 2 or flat screwdriver 5.5 mm (6 mm maximum).

4. PREPARATION - CONNECTION *(continued)*

Connectable section:

	Copper cables	
	Without ferrule	With ferrule
Rigid cable	1 x 0.75 mm² to 50 mm² 2 x 0.75 mm² to 16 mm²	-
Flexible cable	1 x 0.75 mm² to 35 mm² 2 x 0.75 mm² to 16 mm²	1 x 0.75 mm² to 25 mm²

Manual actuation of the MCB:

. Ergonomic 2-position handle

. "I-ON": Device closed

. "O-OFF": Device open

Locking:

. Padlocks possible in the open and closed positions with padlock support (Cat. No. F80BL) and Ø5 mm padlock or Ø6 mm padlock

Sealing:

. Possible in the open and closed positions

Contact status display:

. By marking of the handle

- "O-OFF" in white on a green background = contacts open
- "I-ON" in white on a red background = contacts closed

Residual current tripping display:

. By a mechanical indicator.

Labelling:

. Identification of the circuit by insertion of a label in the label holder.

5. GENERAL CHARACTERISTICS

Marking on the front side:

. By permanent ink pad printing

Maximum operating voltage:

. 250 V AC

Short-circuit breaking capacity:

Alternate current 50Hz, single-phase network

. In accordance with standard:

Standard		Un	1P+N
IEC/EN 61009-1	Icn	230V~	6kA
	Ics	230V~	6kA

Standard		Un	1P+N
IEC/EN 60947-2	Icu	230V~	10kA
	Ics	230V~	5kA

Short-circuit breaking capacity of one pole:

. 3 kA at at 230 V~ in accordance with IIT EN/IEC 60947-2 (double fault in IT network)
. 4,5 kA at 230 V~ in accordance with Icn1 EN60898-1

Rated residual breaking capacity:

. IΔm = 4500A in accordance with EN/IEC 61009-1 (short-circuit to earth).

Time-current characteristic according to IEC/EN 61009-1:

. Reference temperature: 30° C
. Non-tripping current (Int): 1,13 In.
. Tripping current (It): 1,45 In.

Operating voltage ranges of the Test circuit:

IΔn	30 mA	300 mA
U min.	180 V ~	170 V ~
U max.	264 V ~	264 V ~

Ambient operating temperature:

. Min. = -25° C. Max. = +60° C

Ambient storage temperature:

. Min. = -40° C. Max. = +70° C

Isolation:

. The RCBO is suitable for isolation in accordance with EN/IEC 61009-1 standard. The distance between contacts is greater than 5.5 mm when the handle is in open position.

Rated insulation voltage:

. Ui = 250 V

5. GENERAL CHARACTERISTICS *(continued)*

Overvoltage category:

. 3

Rated impulse withstand voltage:

. Uimp = 4 kV

Pollution degree:

. 2 according to IEC/EN 61009-1.

Dielectric strength at power frequency:

. 2000 V

Unwanted tripping withstand:

. 250 A to 8/20 μs wave
. 200 A to 0.5 μs / 100 kHz damped recurring wave

Closing and opening force via the handle:

. 10 N to close the RCBO
. 4 N to open the RCBO

Mechanical endurance:

. Compliant with standard EN/IEC 61009-1
. Tested with 20,000 operations with no load

Electrical endurance:

. Compliant with standard EN/IEC 61009-1
. Tested with 10,000 operations with load (In x Cos φ 0.9)
. Tested with 2,000 residual current tripping operations using the test button or a fault current

Degree of protection:

. Degree of protection in the terminals area (wired device): IP 20, (in accordance with standards IEC/EN 61009-1 and IEC/EN 60529).
. Degree of protection of the remaining parts: IP 40 (in accordance with standards IEC/EN 60529).
. Protection index against mechanical shocks: IK 02 (in accordance with standards IEC/EN 62262).

Sinusoidal vibration resistance in accordance with IEC/EN 60068-2-6:

. Axis: x, y, z.
. Frequency range: 10÷55 Hz
. Acceleration: 3g (g=9,81 m/s^2)

Resistance to tremors:

. In accordance with IEC 61009-1

Frequency:

. Operation at 400Hz: No
. Operation at 60Hz: can be used at 60Hz, except “A” types, with sensitivity 30mA, which can be replaced by F types or equivalent ratings and sensitivity.

5. GENERAL CHARACTERISTICS *(continued)*

Enclosure material:

. Polyamide and P.B.T.

Enclosure heat and fire resistance:

. Glow-wire test at 960° C according to IEC/EN 61009-1 and IEC 60695-2-12

. Classification V2 in accordance with UL94 standard

Higher heating potential:

. The heat potential is assessed at: 2.1MJ

Volume when packed:

	Volume (dm^3)	Packaging
2P	0,40	Per 1

Power dissipated per device (W):

. Type C RCBO

In	2 A	3 A	4 A	6 A	10 A	16 A	20 A	25 A	32 A	40 A
Ph	0,7	0,7	0,7	0,7	1,9	3,3	4,9	3,7	4,7	7,6
N	0	0	0,2	0,2	0,5	1,5	2,3	2,6	4,2	5,3

. Impedance (Ω) = P dissipated /In^2

Derating of RCBOs according to ambient temperature:

. The nominal characteristics of a RCBO are modified according to the ambient temperature inside the cabinet or the enclosure where the circuit breaker is located.

. Reference temperature: 30° C in accordance with IEC/EN 61009-1

	Ambient Temperature / In								
In (A)	**- 25° C**	**- 10° C**	**0° C**	**10° C**	**20° C**	**30° C**	**40° C**	**50° C**	**60° C**
2	**2.5**	**2.4**	**2.3**	**2.2**	**2.1**	**2**	**1.9**	**1.9**	**1.8**
3	**3.75**	**3.6**	**3.45**	**3.3**	**3.15**	**3**	**2.91**	**2.82**	**2.73**
4	**5**	**4.8**	**4.6**	**4.4**	**4.2**	**4**	**3.9**	**3.8**	**3. 6**
6	**7.5**	**7.2**	**6.9**	**6.6**	**6.3**	**6**	**5.82**	**5.64**	**5.46**
10	**12.5**	**12**	**11.5**	**11**	**10.5**	**10**	**9.7**	**9.4**	**9.1**
16	**20**	**19.2**	**18.4**	**17.6**	**16.8**	**16**	**15.52**	**15.04**	**14.56**
20	**25**	**24**	**23**	**22**	**21**	**20**	**19.4**	**18.8**	**18.2**
25	**31.25**	**30**	**28.75**	**27.5**	**26.25**	**25**	**24.25**	**23.5**	**22.75**
32	**40**	**38.4**	**36.8**	**35.2**	**33.6**	**32**	**31.04**	**30.08**	**29.12**
40	**50**	**48**	**46**	**44**	**42**	**40**	**38.8**	**37.6**	**36.4**

5. GENERAL CHARACTERISTICS *(continued)*

Derating of RCBO for use with fluorescent lights:

Ferromagnetic and electronic ballasts have a high inrush current for a short time. These currents can cause the tripping of RCBOs.

At the time of the installation, it should take into account the maximum number of ballasts per RCBO that the manufacturers of lamps and ballasts indicate in their catalogues.

Influence of the altitude:

	≤2000 m	3000 m	4000 m
Dielectric holding	**2 000 V**	**1 750 V**	**1 500 V**
Max operational Voltage	**250 V**	**250 V**	**250 V**
Derating at 30° C	**none**	**none**	**none**

Derating of RCBOs function of the number of devices side by side:

When several RCBOs are installed side by side and operate simultaneously, the thermal evacuation of the poles is limited. This results in an increase in operating temperature of the RCBOs which can cause unwanted tripping. It is recommended to apply the following coefficients to the rated currents.

Number of RCBOs side by side	Coefficient
2 - 3	**0.9**
4 – 5	**0.8**
6 - 9	**0.7**
≥ 10	**0.6**

These values are given by the recommendation of IEC 60439-1.

To avoid using these coefficients, it is necessary to allow a good ventilation and to separate the devices with 0.5 module spacing elements (F80/05De).

6. CONFORMITIES AND APPROVALS

Reference standards:

. EN / IEC 61009-1

Classification according to Annex Q (standard IEC/EN 60947-1):

Category C with a range test temperature -25 ° C / +70 ° C

Salt fog atmosphere according IEC 60068-2-52

Environment respect – Compliance with EU directives:

. Compliance with Directive 2011/65/EU of 08/06/11 (RoHS) and subsequent modifications and integrations.

Compliance with Directive 2002/95/EC of 27/01/03 known as "RoHS" which provides for a restriction on the use of dangerous substances such as lead, mercury, cadmium, hexavalent chromium and polybrominated biphenyl (PBB) and polybrominated diphenyl ether (PBDE) brominated flame retardants from 1st July 2006

. Compliance with the Directive 91/338/EEC of 18/06/91 and decree 94-647 of 27/07/04

Plastic materials:.

. Labelling of parts compliant with ISO 11469 and ISO 1043.

. Halogen free plastic materials

Packaging:

. Design and manufacture of packaging compliant with decree 98-638 of 20/07/98 and Directive 94/62/EC

7. CURVES

Typical thermal-magnetic tripping curve of RCBOs curve C:

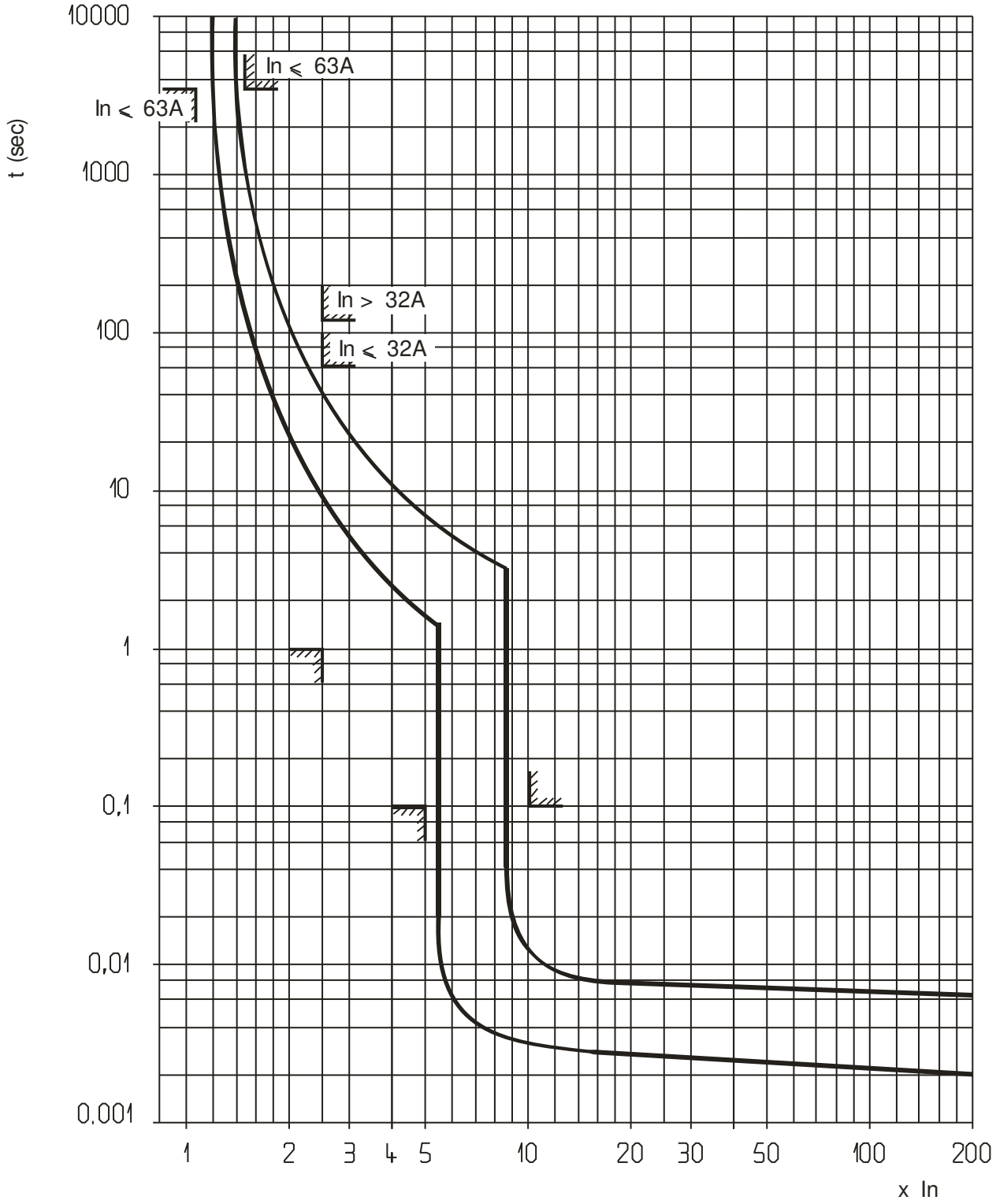

7. CURVES *(continued)*

Limiting current curve:

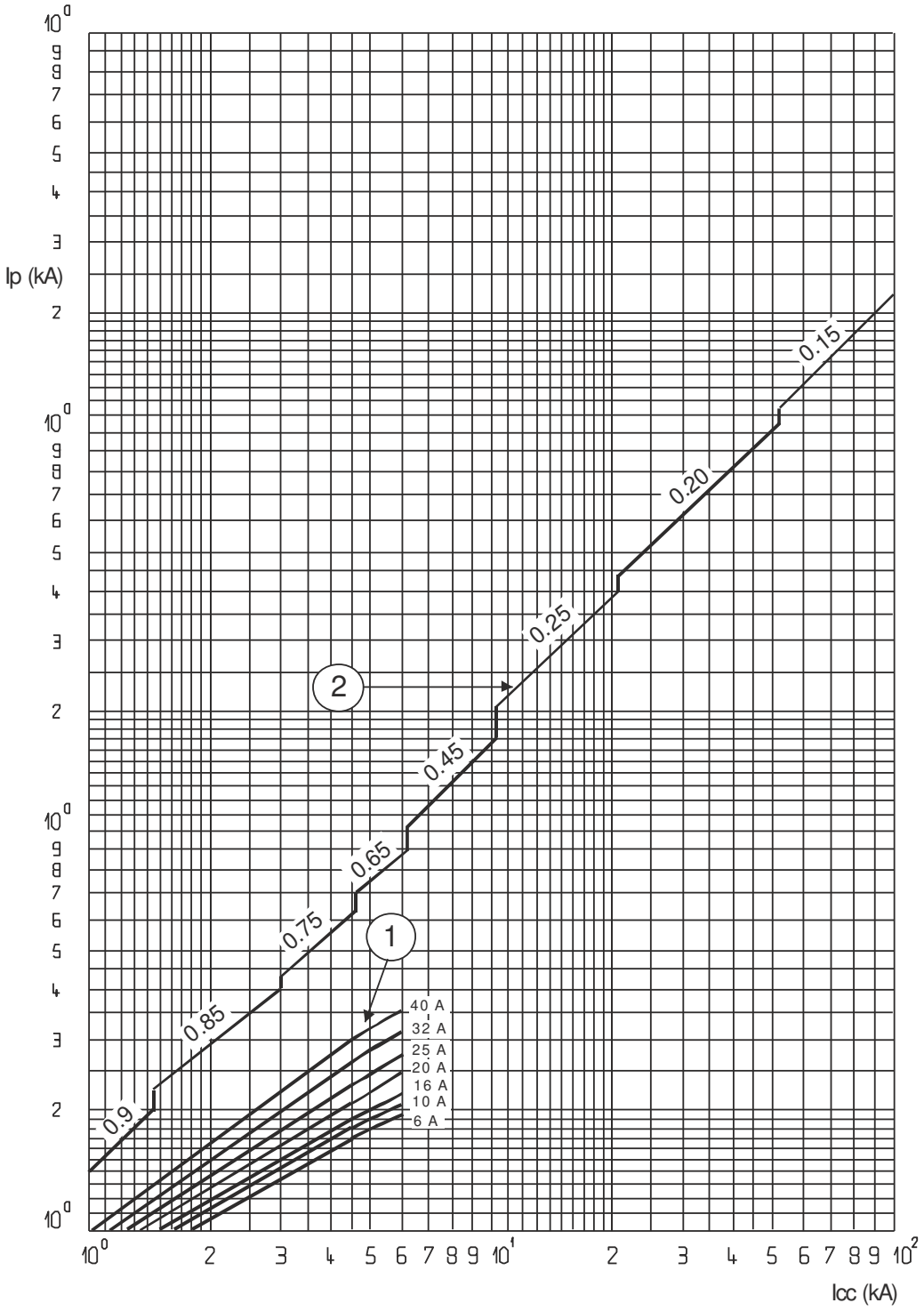

. Icc = Square value of symmetric component of the short circuit current (kA).

. IP = Max peak value (kA)

. 1 = Short-circuit rms currents (max. peak)

. 2 = Unlimited peak currents (max.), corresponding to power factors shown above (0.15 to 0.9)

7. CURVES *(continued)*

Thermal stress limiting curves:

. C curve 2P RCBOs (230V/50Hz)

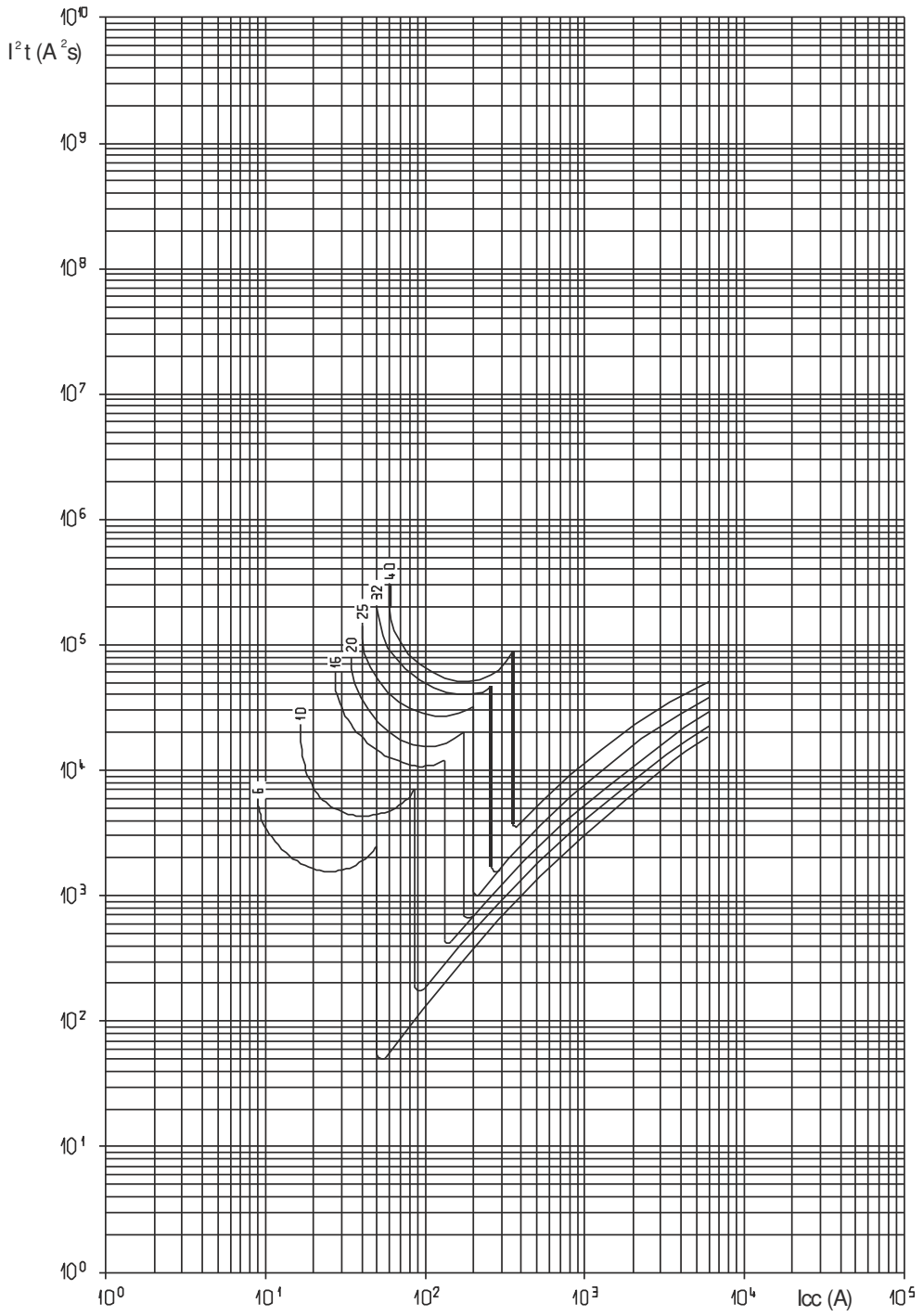

. Icc = Square value of symmetric component of the short circuit current (kA).

. I^2t = Thermal energy limited (A^2s).

7. CURVES *(continued)*

Residual current tripping curves:

. AC – A types

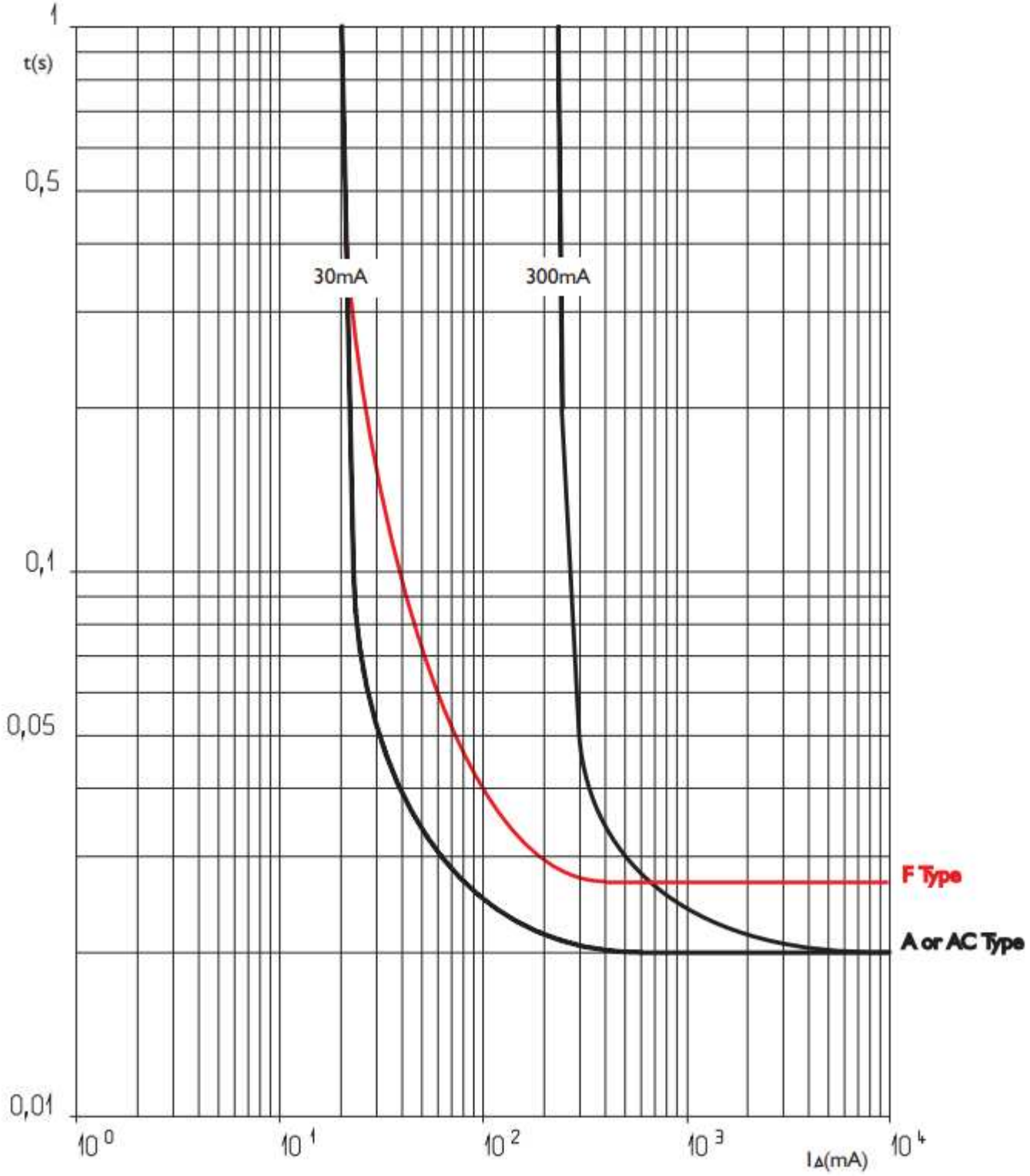

8. AUXILIARIES AND ACCESSORIES

Wiring accessories:

. Fork busbar (on lower side only)

. Pin busbar.

. Sealable screwcover (cat. No. F80CV)

. Insulating shields (cat. No. F80SEP)

. For the connection of Aluminium cable, use the accessory cat. N° F80ALU (terminal for 10 mm² to 50 mm² aluminium cables).

Signalling auxiliaries:

. Auxiliary contact (0.5 module, cat. No. F80CA05)
. Fault signalling contact (0.5 module, cat. No. F80CR05)
. Auxiliary contact that can be changed into fault signalling contact (0.5 module, cat. No. F80RC05)

. Auxiliary contact + fault signalling contact that can be changed into 2 auxiliary contacts (1 module, cat. No. F80CR)

Control auxiliaries:

. Shunt trip (1 module, cat. No. F80ST1 / F80ST2)
. Under voltage release (1 module, cat. No. F80SV1 / F80SV2)

. Autonomous shunt trip release for N/C push-button (1.5 module, cat. No. F80SVE2)

. Power Overvoltage Protection (1 module, cat. No. F80SVP)

Motor driven control modules:

. Motor-driven control module (1 module, cat. No. F80MC230)

. Motor-driven control module with integrated automatic reset (2 modules, cat. No. F80MR24, F80MR230)

Automatic resetting:

. Automatic resetting STOP & Go (cat. No. F80SG, F80SGB, F80SGPN).

Possible combinations of RCBO and auxiliaries:

. Auxiliaries are clipped on the left of the RCBO

. Maximum number of auxiliaries for oneRCBO: 3.

. Two signalling auxiliaries max. (cat. No. F80CA05, F80CR05, F80RC05, F80CR).

. Only one control auxiliary (cat. No. F80ST1, F80ST2, F80SV1, F80SV2, F80SVE2, F80SVP).

. One remote motor driven remote control or one STOP & GO automatic resetting.

. If signalling and control auxiliaries are associated on the same circuit-breaker, the control auxiliary must be placed to the left of the signalling auxiliary

Front external rotary handle

. Black handle (cat. No. F80KMN)

. Yellow and red handle (cat. No. F80KMR)

8. AUXILIARIES AND ACCESSORIES *(continued)*

Supply Invertor

. Manual supply invertor (cat. No. F80KM2, F80KM3, F80KM4)

Sealing:

. Possible in the open or closed positions

Locking options:

. Padlock support (cat. No. F80BL)

9. SAFETY

. For your safety your electrical installation is equipped with residual current protection and this must be tested periodically. In the absence of any national regulations on the time period required for this, Legrand recommends that this test be carried out every month: press the "T" test button, the device should trip. Please call an electrician immediately if this does not happen as the safety level of your installation has been reduced

. The presence of residual current protection does not remove the need to observe all the precautions associated with using electrical energy.

F80RC

Auxiliary contact switchable in allarm contact 1NO/NC - Vn=230Vac - 1 module

Technical features

Brand	BTicino
Reference Standard	CEI EN 60947-5-1
Rated voltage	230Vac
Modules	1
Contact type	1NO/NC
Protection class	IP20
Height	83mm
Width	17.7mm
Depth	76mm
Maximum cable section	2.5mmq
Series	Btdin

Commercial data

Minimum quantity	1
Sales unit	1
EAN code	8005543408148

Technical documentation

DWG drawing

Instruction Sheet

Complete with

F80RC05
Auxiliary contact switchable in allarm c...

F80CA
Auxiliary contact for 1NO/NC - Vn=230Vac...

F80CA05
Auxiliary contact 1NO/NC - Vn=230Vac - 0...

F80CR
Alarm contact 1NO/NC - Vn=230Vac - 1 mod...

F80CR05
Alarm contact 1NO/NC - Vn=230Vac - 0,5 m...

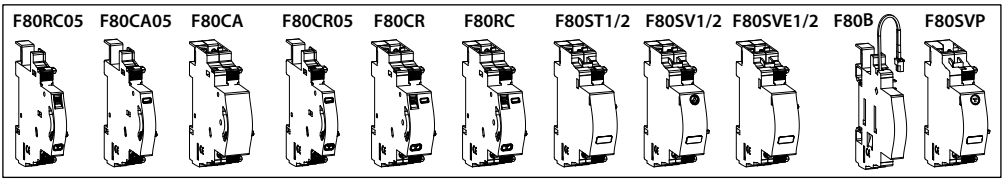
F80RC05
F80CA05
F80CA
F80CR05
F80CR
F80RC
F80ST1/2
F80SV1/2
F80SVE1/2
F80B
F80SVP

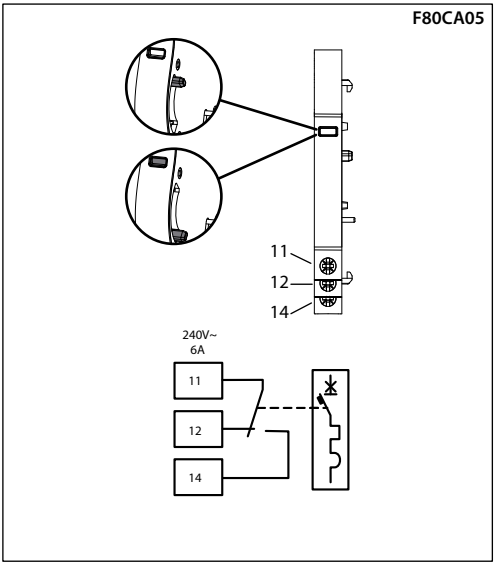
F80CA05
11
12
14
240V~
6A
11
12
14

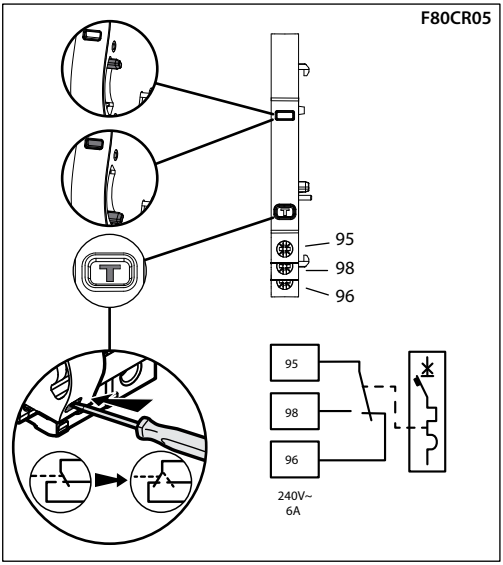
F80CR05
T
95
98
96
95
98
96
240V~
6A

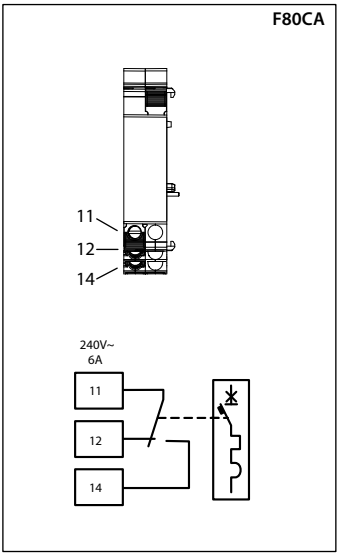
F80CA
11
12
14
240V~
6A
11
12
14

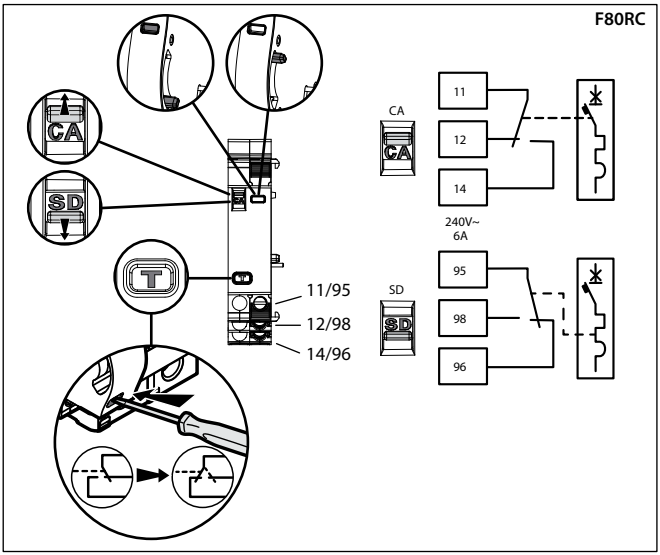
F80RC
CA
SD
T
11/95
12/98
14/96
CA
11
12
14
240V~
6A
SD
95
98
96

LE11862AA

F80RC05

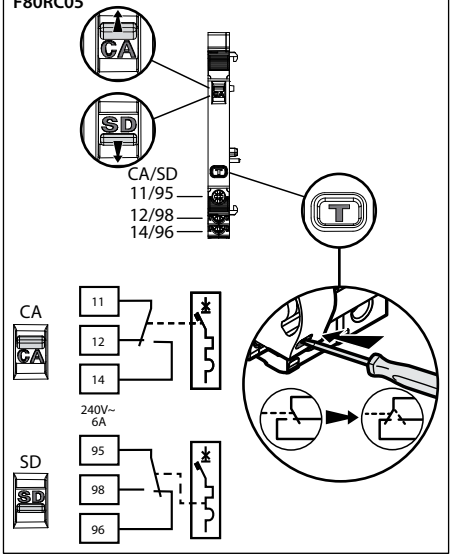

F80CR

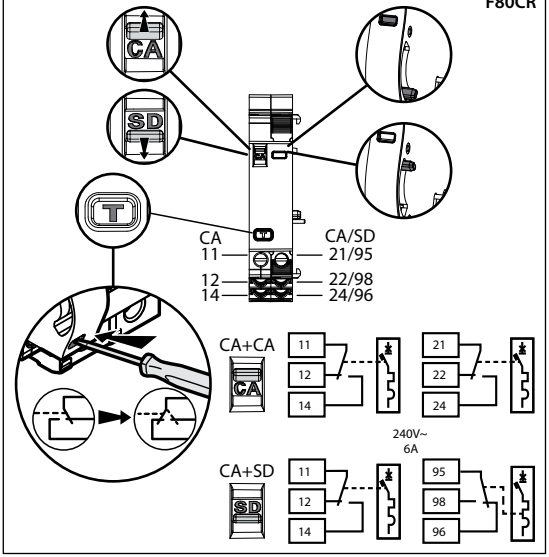

F80ST1 - 12-48Vac/dc
F80ST2 - 110-415Vac / 110-125Vdc

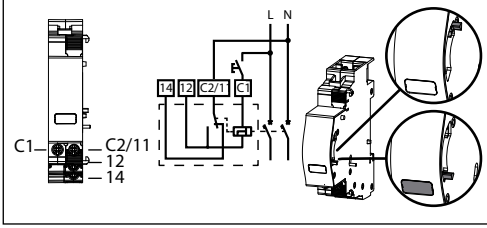

F80SV1 - 24-48Vac/dc

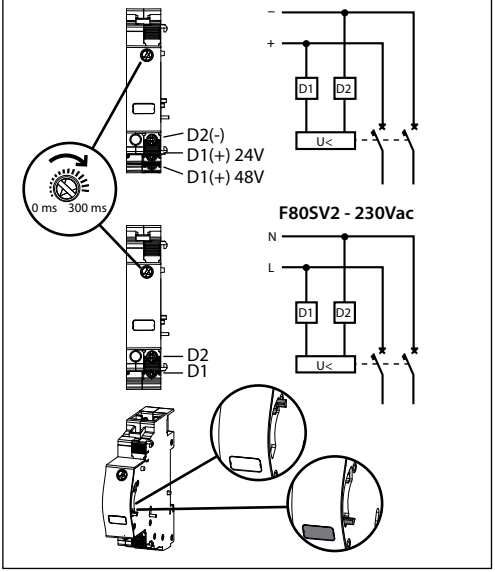

F80SVP

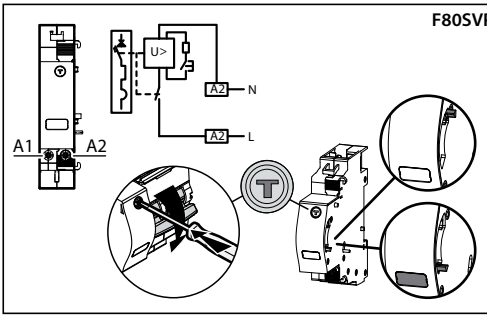

F80SVE1 - 24Vac

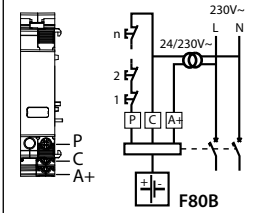

F80SVE2 - 230Vac

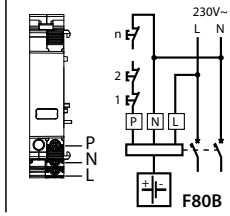

F80B

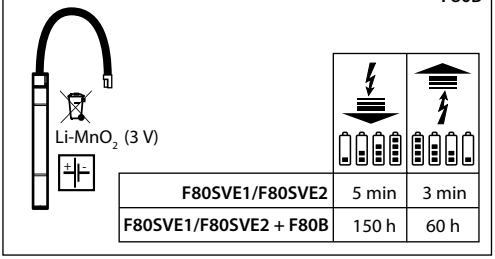

F80SVE1/F80SVE2	5 min	3 min
F80SVE1/F80SVE2 + F80B	150 h	60 h

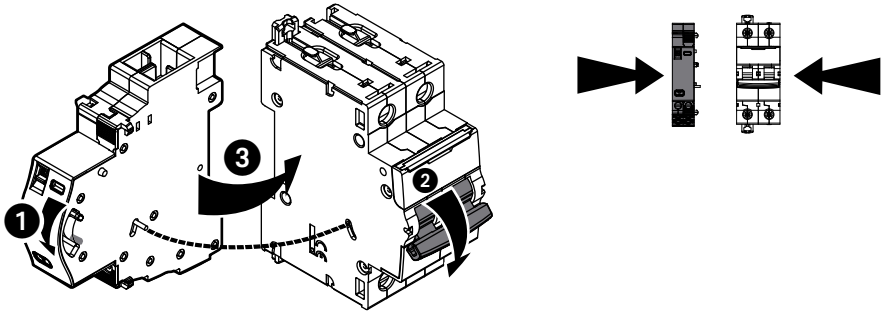
1
2
3

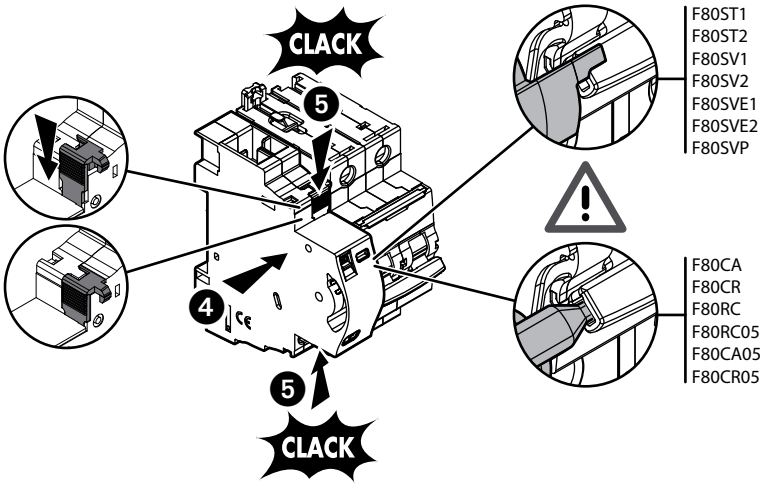
CLACK
5
4
5
CLACK
F80ST1
F80ST2
F80SV1
F80SV2
F80SVE1
F80SVE2
F80SVP
F80CA
F80CR
F80RC
F80RC05
F80CA05
F80CR05

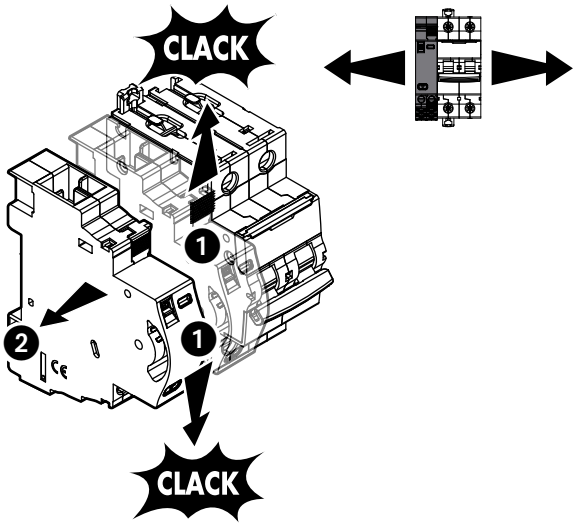
CLACK
1
2
1
CLACK

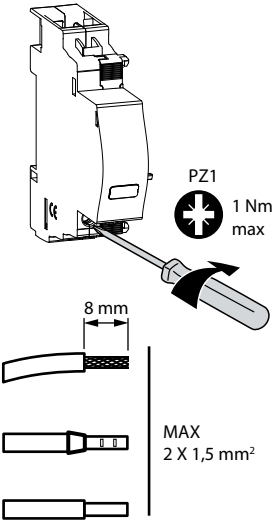
PZ1
1 Nm
max
8 mm
MAX
2 X 1,5 mm²

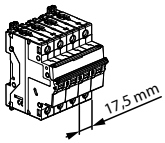	MAX n°3	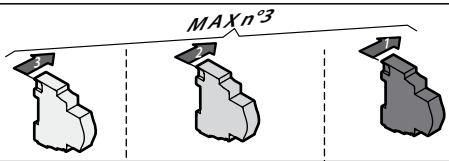		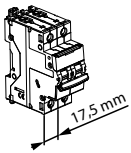
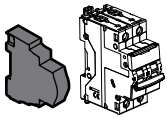			F80RC05 F80ST1 F80CR F80ST2 F80CA F80SV1 F80RC F80SV2 F80CA05 F80SVE1 F80CR05 F80SVE2 F80BCR F80SVE1+F80B F80SVE2+F80B F80SVP	
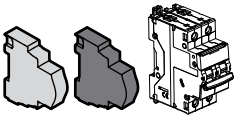		F80RC05 F80CA05 F80BCR F80S.... F80CR05 F80RC05 F80SV1 F80CR F80SV2 F80CA F80SVE1 F80RC F80SVE2 F80ST1 F80SVE1+F80B F80ST2 F80SVE2+F80B F80CA05 F80SVP F80CR05 F80BCR	F80RC05 F80CA05 F80BCR F80CR05 F80CR F80CA F80RC	
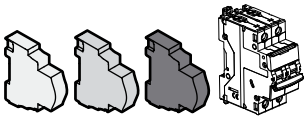	F80ST1 F80ST2 F80SV1 F80SV2 F80SVE1 F80SVE2 F80SVE1+F80B F80SVE2+F80B F80SVP	F80RC05 F80CA05 F80BCR F80CR05 F80RC05 F80BCR F80CR F80CA F80RC F80CA05 F80CR05	F80RC05 F80CA05 F80BCR F80CR05 F80CR F80CA F80RC	

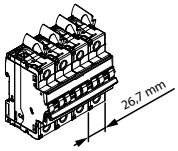				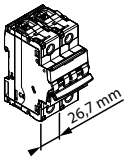
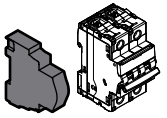			F80RC05 F80SVE1 F80CR F80SVE2 F80CA F80SVE1+F80B F80RC F80SVE2+F80B F80ST1 F80SVP F80ST2 F80CA05 F80SV1 F80CR05 F80SV2 F80BCR	
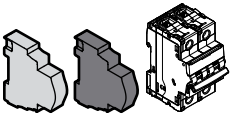		F80RC05 F80BCR F80CA05 F80CR05 F80RC05 F80SVE1 F80CR F80SVE2 F80CA F80SVE1+F80B F80RC F80SVE2+F80B F80ST1 F80SVP F80ST2 F80CA05 F80SV1 F80CR05 F80SV2 F80BCR	F80RC05 F80BCR F80CA05 F80CR05 F80CA F80CR F80RC	
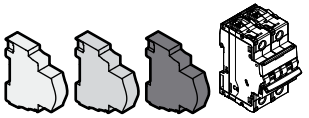	F80ST1 F80ST2 F80SV1 F80SV2 F80SVE1 F80SVE2 F80SVE1+F80B F80SVE2+F80B F80SVP	F80CA F80CR F80RC	F80CA F80CR F80RC	

Il non rispetto alla lettera delle condizioni d'installazione e di utilizzo può generare rischi di scariche elettriche o di incendio. IT CH

The instructions for installation and use must be strictly observed in or der to avoid the risk of electric or fire. GB IE

Ne pas respecter strictement les conditions d'installation et d'utilisation peut entraîner des risques de choc électrique ou d'incendie. FR LU BE CH

Bei Nichtbeachtung der Einbau- und Nutzungsvorschriften besteht Stromschlag- bzw. Brandgefahr. DE AT LI CH

El no cumplimiento estricto de las instrucciones de instalación y uso puede implicar riesgos de choque eléctrico o incendio. ES

Não respeitar estritamente as condições de instalação e de utilização poderá provocar riscos de choque eléctrico ou de incêndio. PT

FISA TEHNICA E-IA-2P
Intreruptor automat 2P

Nr Crt.	Specificațiile tehnice impuse prin Caietul de sarcini	Corespondența propunerii tehnice cu specificațiile tehnice impuse prin Caietul de sarcini	Producător
0	1	2	3
1.	**Parametrii tehnici şi functionali:** Număr poli: 2; Curent nominal: 6, 10, 16 A, Tensiune de tinere la impuls - 4kV Capacitatea de rupere: 6k; Cod pentru curba: C; Tensiune nominal: 230V; 50/60Hz-AC; Clasa de limitare: 3; Gradul de protecție: IP20; Montaj: cu cleme pe șină DIN 35mm; Domeniu de temperatura: 0° C ... +40° C Anduranță mecanica: minim 10.000 cicluri; Anduranță electrica: minim 5.000 cicluri; Contacte de semnalizare defect; Contact semnalizare închis/deschis	**Parametrii tehnici şi functionali:** Număr poli: 2; Curent nominal: 6, 10, 16 A, Tensiune de tinere la impuls - 4kV Capacitatea de rupere: 6k; Cod pentru curba: C; Tensiune nominal: 230V; 50/60Hz-AC; Clasa de limitare: 3; Gradul de protecție: IP20; Montaj: cu cleme pe șină DIN 35mm; Domeniu de temperatura: 0° C ... +40° C Anduranță mecanica: minim 10.000 cicluri; Anduranță electrica: minim 5.000 cicluri; Contacte de semnalizare defect; Contact semnalizare închis/deschis	SCHNEIDER
2.	**Specificaţii de performanţă şi condiţii privind siguranta în exploatare:** Borne sus si jos cu cap fix si brida culisantă Posibilitatea montării ulterioare a accesoriilor Protecția terminalelor la atingere cu mana.	**Specificaţii de performanţă şi condiţii privind siguranta în exploatare:** Borne sus si jos cu cap fix si brida culisantă Posibilitatea montării ulterioare a accesoriilor Protecția terminalelor la atingere cu mana.	
3.	**Conditii privind conformitatea cu standarde relevante:** Construcție conform: IEC 898 SR EN 61009 SR EN 60529	**Conditii privind conformitatea cu standarde relevante:** Construcție conform: IEC 898 SR EN 61009 SR EN 60529	
4.	**Condiţii de garanţie şi postgaranţie:** Producătorul va garanta calitatea şi buna funcţionare a produsului timp de 24 luni de la punerea în funcţiune sau de 36 luni de la data livrarii. Produsul va corespunde normelor tehnice şi standardelor europene.	**Condiţii de garanţie şi postgaranţie:** Producătorul va garanta calitatea şi buna funcţionare a produsului timp de 24 luni de la punerea în funcţiune sau de 36 luni de la data livrarii. Produsul va corespunde normelor tehnice şi standardelor europene.	
5.	**Condiţii cu caracter tehnic:** Nu vor fi luate în consideraţie decât ofertele însoţite de documentaţie completă pentru selecţie şi montaj în limba română. Vor li anexate:instrucţiuni de montaj (scheme de conectare, broşuri, cataloage); instrucţiuni de exploatare;buletine de încercări, verificări, probe; declaratie de conformitate.	**Condiţii cu caracter tehnic:** Nu vor fi luate în consideraţie decât ofertele însoţite de documentaţie completă pentru selecţie şi montaj în limba română. Vor li anexate:instrucţiuni de montaj (scheme de conectare, broşuri, cataloage); instrucţiuni de exploatare;buletine de încercări, verificări, probe; declaratie de conformitate.	

Fişă tehnică produs

Specificatii

Green Premium

Acti9 Ic60n, intreruptor miniatura, 2P, 6A, curba C

A9F74206

Principal

aplicatie a dispozitivului	Distributie
Gama	Acti 9
nume produs	Acti9 iC60
Tip produs sau componenta	Miniature circuit-breaker
nume scurt al dispozitivului	iC60N
descriere poli	2P
numarul polilor protejati	2
[In] curent nominal	6 A
Tip retea electrica	C.a. C.c.
tehnologie unitate de declansare	Termo-magnetic
cod pentru curba	C
capacitate de rupere	6000 A Icn la 400 V c.a. 50/60 Hz conformitate cu EN/IEC 60898-1 36 kA Icu la 12...60 V c.a. 50/60 Hz conformitate cu SR EN 60947-2 10 kA Icu la <= 125 V c.c. conformitate cu SR EN 60947-2 10 kA Icu la 380...415 V c.a. 50/60 Hz conformitate cu SR EN 60947-2 20 kA Icu la 220...240 V c.a. 50/60 Hz conformitate cu SR EN 60947-2 6 kA Icu la 440 V c.a. 50/60 Hz conformitate cu SR EN 60947-2 36 kA Icu la 100...133 V c.a. 50/60 Hz conformitate cu SR EN 60947-2
categorie de utilizare	Categoria A conformitate cu SR EN 60947-2 Categoria A conformitate cu SR EN 60947-2
adecvare pentru izolatie	Da conformitate cu SR EN 60898-1 Da conformitate cu SR EN 60947-2 Da conformitate cu SR EN 60898-1 Da conformitate cu SR EN 60947-2
standarde	SR EN 60898-1 SR EN 60898-1 SR EN 60947-2 SR EN 60947-2

Suplimentar

frecventa retea electrica	50/60 Hz
limita de declansare magnetica	8 x In +/- 20 %

[Ics] capacitatea nominala de rupere in serviciu	15 kA 75 % conformitate cu SR EN 60947-2 - 220...240 V c.a. 50/60 Hz 7,5 kA 75 % conformitate cu SR EN 60947-2 - 380...415 V c.a. 50/60 Hz 4,5 kA 75 % conformitate cu SR EN 60947-2 - 440 V c.a. 50/60 Hz 15 kA 75 % conformitate cu SR EN 60947-2 - 220...240 V c.a. 50/60 Hz 7,5 kA 75 % conformitate cu SR EN 60947-2 - 380...415 V c.a. 50/60 Hz 4,5 kA 75 % conformitate cu SR EN 60947-2 - 440 V c.a. 50/60 Hz 27 kA 75 % conformitate cu SR EN 60947-2 - 12...133 V c.a. 50/60 Hz 27 kA 75 % conformitate cu SR EN 60947-2 - 12...133 V c.a. 50/60 Hz 6000 A 100 % conformitate cu SR EN 60898-1 - 400 V c.a. 50/60 Hz 6000 A 100 % conformitate cu SR EN 60898-1 - 400 V c.a. 50/60 Hz 10 kA 100 % conformitate cu SR EN 60947-2 - 72...125 V c.c. 10 kA 100 % conformitate cu SR EN 60947-2 - 72...125 V c.c.
clasa de limitare	3 conformitate cu SR EN 60898-1 3 conformitate cu SR EN 60898-1
[Ui] tensiune nominala de izolatie	500 V c.a. 50/60 Hz conformitate cu SR EN 60947-2 500 V c.a. 50/60 Hz conformitate cu SR EN 60947-2
[Uimp] tensiune nominala de tinere la impuls	6 kV conformitate cu SR EN 60947-2 6 kV conformitate cu SR EN 60947-2
indicator de pozitie contact	Da
tip de control	Comutare
semnalizare locala	Indicator declanșare
mod de montare	Fix
suport de montare	Sina DIN
pieptene bare de distributie pe categorii de compatibilitate	Sus sau jos da
Numar de pasi de 9mm pe rand	4
inaltime	85 mm
latime	36 mm
adancime	78,5 mm
greutate neta	0,25 kg
culoare	Alb
durabilitate mecanica	20000 cic
durabilitate electrica	10000 cic
conexiuni - borne	Bornă simplă (sus sau jos) 1…25 mm² rigid Bornă simplă (sus sau jos) 1…16 mm² flexibil
lungimea de dezizolare a cablului	14 mm for sus sau jos connection
cuplu de strangere	2 N.m sus sau jos
protectie de scurgere la pamant	Cutie de borne separata

Mediu

grad de protectie IP	IP20 conforming to SR EN 60529 IP20 conforming to SR EN 60529
grad de poluare	3 conformitate cu SR EN 60947-2 3 conformitate cu SR EN 60947-2
categorie de supratensiune	IV
tropicalizare	2 conformitate cu SR EN 60068-1
umiditate relativa	95 % la 55 °C
altitudine de functionare	0...2000 m
temperatura ambientala de functionare	-35…70 °C
temperatura ambietala pentru depozitare	-40…85 °C

Unitati de ambalare

Unitate de masura pentru prima forma de impachetare	PCE
Numar unitati in prima forma de impachetare	1
Inaltime prima forma de impachetare	3,500 cm
Latime prima forma de impachetare	7,300 cm
Lungime prima forma de impachetare	9,200 cm
Greutate prima forma de impachetare	212,000 g
Unitate de masura pentru a doua forma de impachetare	BB1
Numar unitati in a doua forma de impachetare	6
Inaltime a doua forma de impachetare	8,700 cm
Latime a doua forma de impachetare	9,900 cm
Lungime a doua forma de impachetare	23,000 cm
Greutate a doua forma de impachetare	1,382 kg
Unitate de masura pentru a treia forma de impachetare	S03
Numar unitati in a treia forma de impachetare	66
Inaltime a treia forma de impachetare	30,000 cm
Latime a treia forma de impachetare	30,000 cm
Lungime a treia forma de impachetare	40,000 cm
Greutate a treia forma de impachetare	15,804 kg

Garantie contractuala

Garantie	18 months

Fişă tehnică produs

Specificatii

Acti9 Ic60n, intreruptor miniatura, 2P, 10A, curba C

A9F74210

Principal

Domeniu de utilizare al dispozitivului	Distributie
Gama	Acti9
Nume produs	Acti9 iC60
Tip produs sau componenta	Miniature circuit-breaker
Nume scurt al dispozitivului	iC60N
Descriere poli	2P
Numarul polilor protejati	2
[In] calibru	10 A
Tip retea electrica	C.a. C.c.
Tehnologie unitate de declansare	Termo-magnetic
Cod pentru curba	C
Capacitate de rupere	6000 A Icn la 400 V c.a. 50/60 Hz conformitate cu EN/IEC 60898-1 36 kA Icu la 12...60 V c.a. 50/60 Hz conformitate cu SR EN 60947-2 10 kA Icu la <= 125 V c.c. conformitate cu SR EN 60947-2 10 kA Icu la 380...415 V c.a. 50/60 Hz conformitate cu SR EN 60947-2 20 kA Icu la 220...240 V c.a. 50/60 Hz conformitate cu SR EN 60947-2 6 kA Icu la 440 V c.a. 50/60 Hz conformitate cu SR EN 60947-2 36 kA Icu la 100...133 V c.a. 50/60 Hz conformitate cu SR EN 60947-2
Categorie de utilizare	Categoria A conformitate cu SR EN 60947-2 Categoria A conformitate cu SR EN 60947-2
Adecvare pentru izolatie	Da conformitate cu SR EN 60898-1 Da conformitate cu SR EN 60947-2 Da conformitate cu SR EN 60898-1 Da conformitate cu SR EN 60947-2
Standarde	SR EN 60947-2 SR EN 60947-2 SR EN 60898-1 SR EN 60898-1

Suplimentar

Frecventa retea electrica	50/60 Hz
Limita de declansare magnetica	8 x In +/- 20 %
[Ics] capacitatea nominala de rupere in serviciu	15 kA 75 % conformitate cu SR EN 60947-2 - 220...240 V c.a. 50/60 Hz 7,5 kA 75 % conformitate cu SR EN 60947-2 - 380...415 V c.a. 50/60 Hz 4,5 kA 75 % conformitate cu SR EN 60947-2 - 440 V c.a. 50/60 Hz 15 kA 75 % conformitate cu SR EN 60947-2 - 220...240 V c.a. 50/60 Hz 7,5 kA 75 % conformitate cu SR EN 60947-2 - 380...415 V c.a. 50/60 Hz 4,5 kA 75 % conformitate cu SR EN 60947-2 - 440 V c.a. 50/60 Hz

	27 kA 75 % conformitate cu SR EN 60947-2 - 12...133 V c.a. 50/60 Hz 27 kA 75 % conformitate cu SR EN 60947-2 - 12...133 V c.a. 50/60 Hz 6000 A 100 % conformitate cu SR EN 60898-1 - 400 V c.a. 50/60 Hz 6000 A 100 % conformitate cu SR EN 60898-1 - 400 V c.a. 50/60 Hz 10 kA 100 % conformitate cu SR EN 60947-2 - 72...125 V c.c. 10 kA 100 % conformitate cu SR EN 60947-2 - 72...125 V c.c.
Clasa de limitare	3 conformitate cu SR EN 60898-1 3 conformitate cu SR EN 60898-1
[Ui] tensiune nominala de izolatie	500 V c.a. 50/60 Hz conformitate cu SR EN 60947-2 500 V c.a. 50/60 Hz conformitate cu SR EN 60947-2
[Uimp] tensiune nominala de tinere la impuls	6 kV conformitate cu SR EN 60947-2 6 kV conformitate cu SR EN 60947-2
Indicator de pozitie contact	Da
Tip de control	Comutare
Semnalizare locala	Indicator declanşare
Mod de montare	Fix
Suport de montare	Sina DIN
Pieptene bare de distributie pe categorii de compatibilitate	Sus sau jos da
Pasi de 9 mm	4
Inaltime	85 mm
Latime	36 mm
Adancime	78,5 mm
Greutate neta	0,25 kg
Culoare	Alb
Durabilitate mecanica	20000 cic
Durabilitate electrica	10000 cic
Conexiuni - borne	Bornă simplă (sus sau jos) 1…25 mm² rigid Bornă simplă (sus sau jos) 1…16 mm² flexibil
Lungimea de dezizolare a cablului	14 mm pentru sus sau jos conectare
Cuplu de strangere	2 N.m sus sau jos
Protectie de scurgere la pamant	Cutie de borne separata

Mediu

Grad de protectie IP	IP20 conformitate cu SR EN 60529 IP20 conformitate cu SR EN 60529
Grad de poluare	3 conformitate cu SR EN 60947-2 3 conformitate cu SR EN 60947-2
Categorie de supratensiune	IV
Tropicalizare	2 conformitate cu SR EN 60068-1
Umiditate relativa	95 % la 55 °C
Altitudine de functionare	0...2000 m
Temperatura ambientala de functionare	-35…70 °C
Temperatura de depozitare	-40…85 °C

Unitati de ambalare

Unitate de masura pentru prima forma de impachetare	PCE
Numar unitati in prima forma de impachetare	1

Inaltime prima forma de impachetare	3,5 cm
Latime prima forma de impachetare	7,2 cm
Lungime prima forma de impachetare	9,3 cm
Greutate prima forma de impachetare	212,0 g
Unitate de masura pentru a doua forma de impachetare	P12
Numar unitati in a doua forma de impachetare	528
Inaltime a doua forma de impachetare	50,0 cm
Latime a doua forma de impachetare	80,0 cm
Lungime a doua forma de impachetare	120,0 cm
Greutate a doua forma de impachetare	133,376 kg
Unitate de masura pentru a treia forma de impachetare	BB1
Numar unitati in a treia forma de impachetare	6
Inaltime a treia forma de impachetare	8,5 cm
Latime a treia forma de impachetare	10,0 cm
Lungime a treia forma de impachetare	22,0 cm
Greutate a treia forma de impachetare	1,414 kg

Sustenabilitatea ofertei

Stare ofertă sustenabilă	Produs Green Premium
Regulamentul REACH	Declaratia REACH
Directiva RoHS UE	Conform Declaratia RoHS UE
Fara mercur	Da
Informatii privind scutirea de la RoHS	Da
Regulamentul RoHS China	Declaratia RoHS China Produs in afara domeniului de aplicare a RoHS China. Declaratia privind substantele in scop informativ.
Raport de mediu	Profilul ambiental al produsului
WEEE	În Uniunea Europeana, produsele trebuie reciclate respectand sistemul specific de colectare a deseurilor si nu trebuie sa ajunga in pubelele de colectare a deseurilor menajere.
Prezenta halogen	Produs fara halogen

Garanţie contractuala

Garantie	18 luni

Substitutii recomandate

Fişă tehnică produs

Specificatii

Acti9 Ic60n, intreruptor miniatura, 2P, 16A, curba C

A9F74216

Principal

Domeniu de utilizare al dispozitivului	Distributie
Gama	Acti9
Nume produs	Acti9 iC60
Tip produs sau componenta	Miniature circuit-breaker
Nume scurt al dispozitivului	iC60N
Descriere poli	2P
Numarul polilor protejati	2
[In] calibru	16 A
Tip retea electrica	C.a. C.c.
Tehnologie unitate de declansare	Termo-magnetic
Cod pentru curba	C
Capacitate de rupere	6000 A Icn la 400 V c.a. 50/60 Hz conformitate cu EN/IEC 60898-1 36 kA Icu la 12...60 V c.a. 50/60 Hz conformitate cu SR EN 60947-2 10 kA Icu la <= 125 V c.c. conformitate cu SR EN 60947-2 10 kA Icu la 380...415 V c.a. 50/60 Hz conformitate cu SR EN 60947-2 20 kA Icu la 220...240 V c.a. 50/60 Hz conformitate cu SR EN 60947-2 6 kA Icu la 440 V c.a. 50/60 Hz conformitate cu SR EN 60947-2 36 kA Icu la 100...133 V c.a. 50/60 Hz conformitate cu SR EN 60947-2
Categorie de utilizare	Categoria A conformitate cu SR EN 60947-2 Categoria A conformitate cu SR EN 60947-2
Adecvare pentru izolatie	Da conformitate cu SR EN 60898-1 Da conformitate cu SR EN 60947-2 Da conformitate cu SR EN 60898-1 Da conformitate cu SR EN 60947-2
Standarde	SR EN 60898-1 SR EN 60898-1 SR EN 60947-2 SR EN 60947-2

Suplimentar

Frecventa retea electrica	50/60 Hz
Limita de declansare magnetica	8 x In +/- 20 %
[Ics] capacitatea nominala de rupere in serviciu	15 kA 75 % conformitate cu SR EN 60947-2 - 220...240 V c.a. 50/60 Hz 7,5 kA 75 % conformitate cu SR EN 60947-2 - 380...415 V c.a. 50/60 Hz 4,5 kA 75 % conformitate cu SR EN 60947-2 - 440 V c.a. 50/60 Hz 15 kA 75 % conformitate cu SR EN 60947-2 - 220...240 V c.a. 50/60 Hz 7,5 kA 75 % conformitate cu SR EN 60947-2 - 380...415 V c.a. 50/60 Hz 4,5 kA 75 % conformitate cu SR EN 60947-2 - 440 V c.a. 50/60 Hz

	27 kA 75 % conformitate cu SR EN 60947-2 - 12...133 V c.a. 50/60 Hz 27 kA 75 % conformitate cu SR EN 60947-2 - 12...133 V c.a. 50/60 Hz 6000 A 100 % conformitate cu SR EN 60898-1 - 400 V c.a. 50/60 Hz 6000 A 100 % conformitate cu SR EN 60898-1 - 400 V c.a. 50/60 Hz 10 kA 100 % conformitate cu SR EN 60947-2 - 72...125 V c.c. 10 kA 100 % conformitate cu SR EN 60947-2 - 72...125 V c.c.
Clasa de limitare	3 conformitate cu SR EN 60898-1 3 conformitate cu SR EN 60898-1
[Ui] tensiune nominala de izolatie	500 V c.a. 50/60 Hz conformitate cu SR EN 60947-2 500 V c.a. 50/60 Hz conformitate cu SR EN 60947-2
[Uimp] tensiune nominala de tinere la impuls	6 kV conformitate cu SR EN 60947-2 6 kV conformitate cu SR EN 60947-2
Indicator de pozitie contact	Da
Tip de control	Comutare
Semnalizare locala	Indicator declanşare
Mod de montare	Fix
Suport de montare	Sina DIN
Pieptene bare de distributie pe categorii de compatibilitate	Sus sau jos da
Pasi de 9 mm	4
Inaltime	85 mm
Latime	36 mm
Adancime	78,5 mm
Greutate neta	0,25 kg
Culoare	Alb
Durabilitate mecanica	20000 cic
Durabilitate electrica	10000 cic
Conexiuni - borne	Bornă simplă (sus sau jos) 1…25 mm² rigid Bornă simplă (sus sau jos) 1…16 mm² flexibil
Lungimea de dezizolare a cablului	14 mm pentru sus sau jos conectare
Cuplu de strangere	2 N.m sus sau jos
Protectie de scurgere la pamant	Cutie de borne separata

Mediu

Grad de protectie IP	IP20 conformitate cu SR EN 60529 IP20 conformitate cu SR EN 60529
Grad de poluare	3 conformitate cu SR EN 60947-2 3 conformitate cu SR EN 60947-2
Categorie de supratensiune	IV
Tropicalizare	2 conformitate cu SR EN 60068-1
Umiditate relativa	95 % la 55 °C
Altitudine de functionare	0...2000 m
Temperatura ambientala de functionare	-35…70 °C
Temperatura de depozitare	-40…85 °C

Unitati de ambalare

Unitate de masura pentru prima forma de impachetare	PCE
Numar unitati in prima forma de impachetare	1

Inaltime prima forma de impachetare	7,5 cm
Latime prima forma de impachetare	3,5 cm
Lungime prima forma de impachetare	9,5 cm
Greutate prima forma de impachetare	217 g
Unitate de masura pentru a doua forma de impachetare	BB1
Numar unitati in a doua forma de impachetare	6
Inaltime a doua forma de impachetare	8 cm
Latime a doua forma de impachetare	9,5 cm
Lungime a doua forma de impachetare	22,5 cm
Greutate a doua forma de impachetare	1,401 kg
Unitate de masura pentru a treia forma de impachetare	S03
Numar unitati in a treia forma de impachetare	66
Inaltime a treia forma de impachetare	30 cm
Latime a treia forma de impachetare	30 cm
Lungime a treia forma de impachetare	40 cm
Greutate a treia forma de impachetare	15,851 kg

Sustenabilitatea ofertei

Stare ofertă sustenabilă	Produs Green Premium
Regulamentul REACH	Declaratia REACH
Directiva RoHS UE	Conform Declaratia RoHS UE
Fara mercur	Da
Informatii privind scutirea de la RoHS	Da
Regulamentul RoHS China	Declaratia RoHS China Produs in afara domeniului de aplicare a RoHS China. Declaratia privind substantele in scop informativ.
Raport de mediu	Profilul ambiental al produsului
WEEE	În Uniunea Europeana, produsele trebuie reciclate respectand sistemul specific de colectare a deseurilor si nu trebuie sa ajunga in pubelele de colectare a deseurilor menajere.
Prezenta halogen	Produs fara halogen

Garanţie contractuala

Garantie	18 months

Substitutii recomandate

Fişă tehnică produs

Specificatii

Acti9, Contact Auxiliar Oc Plus 1 Sd Si Of C.A, C.C

A9N26929

Principal

Gama de produse	Acti 9
Tip produs sau componenta	Contact comutator dublu sau de defect
Nume scurt al dispozitivului	OF si OF sau OF si SD
Compozitie contacte de semnalizare	2 C/O
[In] curent nominal	DC-12 1 A at 130 V, c.c. DC-12 2 A at 48 V, c.c. DC-12 6 A at 24 V, c.c. AC-12 3 A at 415 V, c.a. 50/60 Hz AC-12 6 A at 240 V, c.a. 50/60 Hz
Pasi de 9 mm	1

Suplimentar

Mod de montare	Fix
Suport de montare	Sina DIN
Pieptene bare de distributie pe categorii de compatibilitate	nu
Inaltime	90 mm
Latime	9 mm
Adancime	73,5 mm
Greutate neta	38 g
Culoare	Alb
Conexiuni - borne	Borna cu clema cu surub (top and bottom) 2 cablu(ri) 1,5 mm² - flexibil Borna cu clema cu surub (top and bottom) 1 cablu(ri) 0,5…2,5 mm² - rigid Borna cu clema cu surub (top and bottom) 2 cablu(ri) 1,5 mm² - flexibil cu pin
Lungimea de dezizolare a cablului	9 mm
Cuplu de strangere	1 N.m

Mediu

Standarde	SR EN 60947-5-1
Certificari produs	ASTA ASEFA LCIE KEMA
Grad de protectie IP	IP20 conformitate cu SR EN 60947-5-1

Grad de poluare	3 conformitate cu SR EN 60947-5-1
Tropicalizare	2 conformitate cu SR EN 60947-5-1
Temperatura ambientala de functionare	-25…50 °C
Temperatura de depozitare	-40…85 °C

Unitati de ambalare

Unitate de masura pentru prima forma de impachetare	Db
Numar unitati in prima forma de impachetare	1
Inaltime prima forma de impachetare	2,2 cm
Latime prima forma de impachetare	8 cm
Lungime prima forma de impachetare	9,2 cm
Greutate prima forma de impachetare	46 g
Unitate de masura pentru a doua forma de impachetare	Gyári csomagolás
Numar unitati in a doua forma de impachetare	12
Inaltime a doua forma de impachetare	8,7 cm
Latime a doua forma de impachetare	10 cm
Lungime a doua forma de impachetare	26,5 cm
Greutate a doua forma de impachetare	609 g
Unitate de masura pentru a treia forma de impachetare	Doboz
Numar unitati in a treia forma de impachetare	108
Inaltime a treia forma de impachetare	30 cm
Latime a treia forma de impachetare	30 cm
Lungime a treia forma de impachetare	40 cm
Greutate a treia forma de impachetare	5,94 kg

Sustenabilitatea ofertei

Stare ofertă sustenabilă	Produs Green Premium
Regulamentul REACH	Declaratia REACH
Conform REACh fara SVHC	Da
Directiva RoHS UE	Conform Declaratia RoHS UE
Fara metale grele toxice	Da
Fara mercur	Da
Regulamentul RoHS China	Declaratia RoHS China

	Declaratia proactiva RoHS China (in afara domeniului de aplicare a RoHS China)
Informatii privind scutirea de la RoHS	Da
Raport de mediu	Profilul ambiental al produsului
Profil circularitate	Informatii privind sfarsitul duratei de viata
WEEE	În Uniunea Europeana, produsele trebuie reciclate respectand sistemul specific de colectare a deseurilor si nu trebuie sa ajunga in pubelele de colectare a deseurilor menajere.

Garanţie contractuala

Garantie	18 months

Substitutii recomandate

FIȘĂ TEHNICĂ E-IA-2P-CC
Întreruptor automat 2P pentru curent continuu

Nr Crt.	Specificațiile tehnice impuse prin Caietul de sarcini	Corespondența propunerii tehnice cu specificațiile tehnice impuse prin Caietul de sarcini	Producător
0	1	2	3
1.	**Parametrii tehnici şi functionali:** Număr poli: 2; Curent nominal: 0,5A .. 6A, Tensiune de tinere la impuls 4kV Capacitatea de rupere: 6k; Cod pentru curba: C; Tensiune nominal: 24 Vcc; Gradul de protecție: IP20; Montaj: cu cleme pe șină DIN 35mm; Domeniu de temperatura: 0 .. +40° C Anduranță mecanica: minim 10.000 cicluri; Anduranță electrica: minim 5.000 cicluri; Contacte de semnalizare defect; Contact semnalizare închis/deschis	**Parametrii tehnici şi functionali:** Număr poli: 2; Curent nominal: 0,5A .. 6A, Tensiune de tinere la impuls 4kV Capacitatea de rupere: 6k; Cod pentru curba: C; Tensiune nominal: 24 Vcc; Gradul de protecție: IP20; Montaj: cu cleme pe șină DIN 35mm; Domeniu de temperatura: 0 .. +40° C Anduranță mecanica: minim 10.000 cicluri; Anduranță electrica: minim 5.000 cicluri; Contacte de semnalizare defect; Contact semnalizare închis/deschis	SCHNEIDER
2.	**Specificaţii de performanţă şi condiţii privind siguranta în exploatare:** Borne sus si jos cu cap fix si brida culisantă Posibilitatea montării ulterioare a accesoriilor Protecția terminalelor la atingere cu mana.	**Specificaţii de performanţă şi condiţii privind siguranta în exploatare:** Borne sus si jos cu cap fix si brida culisantă Posibilitatea montării ulterioare a accesoriilor Protecția terminalelor la atingere cu mana.	
3.	**Conditii privind conformitatea cu standarde relevante:** Construcție conform: IEC 898 SR EN 60947-2	**Conditii privind conformitatea cu standarde relevante:** Construcție conform: IEC 898 SR EN 60947-2	
4.	**Condiţii de garanţie şi postgaranţie:** Producătorul va garanta calitatea şi buna funcţionare a produsului timp de 24 luni de la punerea în funcţiune sau de 36 luni de la data livrarii. Produsul va corespunde normelor tehnice şi standardelor europene.	**Condiţii de garanţie şi postgaranţie:** Producătorul va garanta calitatea şi buna funcţionare a produsului timp de 24 luni de la punerea în funcţiune sau de 36 luni de la data livrarii. Produsul va corespunde normelor tehnice şi standardelor europene.	
5.	**Condiţii cu caracter tehnic:** Nu vor fi luate în consideraţie decât ofertele însoţite de documentaţie completă pentru selecţie şi montaj în limba română. Vor li anexate:instrucţiuni de montaj (scheme de conectare, broşuri, cataloage); instrucţiuni de exploatare;buletine de încercări, verificări, probe; declaratie de conformitate.	**Condiţii cu caracter tehnic:** Nu vor fi luate în consideraţie decât ofertele însoţite de documentaţie completă pentru selecţie şi montaj în limba română. Vor li anexate:instrucţiuni de montaj (scheme de conectare, broşuri, cataloage); instrucţiuni de exploatare;buletine de încercări, verificări, probe; declaratie de conformitate.	

Fişă tehnică produs

Specificatii

Intreruptor Miniatura, C60H, 2 Poli, 0.5 A, curba C

A9N61520

Principal

Gama	Acti9
Nume produs	Acti9 C60H-DC
Tip produs sau componenta	Miniature circuit-breaker
Nume scurt al dispozitivului	C60H-DC
Domeniu de utilizare al dispozitivului	Distributie
Descriere poli	2P
Numarul polilor protejati	2
[In] calibru	0,5 A la 25 °C
Tip retea electrica	C.c.
Tehnologie unitate de declansare	Termo-magnetic
Cod pentru curba	C
Capacitate de rupere	10 kA Icu la 440 V c.c. conformitate cu SR EN 60947-2 10 kA Icu la 440 V c.c. conformitate cu SR EN 60947-2 6 kA Icu la 500 V c.c. conformitate cu SR EN 60947-2 6 kA Icu la 500 V c.c. conformitate cu SR EN 60947-2 20 kA Icu la 220 V c.c. conformitate cu GB 14048.2 20 kA Icu la 220 V c.c. conformitate cu SR EN 60947-2 20 kA Icu la 250 V c.c. conformitate cu GB 14048.2 20 kA Icu la 250 V c.c. conformitate cu SR EN 60947-2
Categorie de utilizare	Categoria A conformitate cu SR EN 60947-2 Categoria A conformitate cu SR EN 60947-2
Adecvare pentru izolatie	Da conformitate cu SR EN 60947-2 Da conformitate cu SR EN 60947-2

Suplimentar

Frecventa retea electrica	50/60 Hz
[Ue] tensiune nominala de functionare	500 V c.c.
[Ics] capacitatea nominala de rupere in serviciu	15 kA 75 % conformitate cu SR EN 60947-2 - 220 V c.c. 15 kA 75 % conformitate cu SR EN 60947-2 - 220 V c.c. 15 kA 75 % conformitate cu SR EN 60947-2 - 250 V c.c. 15 kA 75 % conformitate cu SR EN 60947-2 - 250 V c.c. 4,5 kA 75 % conformitate cu SR EN 60947-2 - 500 V c.c. 4,5 kA 75 % conformitate cu SR EN 60947-2 - 500 V c.c. 7,5 kA 75 % conformitate cu SR EN 60947-2 - 440 V c.c. 7,5 kA 75 % conformitate cu SR EN 60947-2 - 440 V c.c.
[Ui] tensiune nominala de izolatie	500 V c.c. conformitate cu SR EN 60947-2 500 V c.c. conformitate cu SR EN 60947-2

[Uimp] tensiune nominala de tinere la impuls	6 kV conformitate cu SR EN 60947-2 6 kV conformitate cu SR EN 60947-2
Indicator de pozitie contact	Da
Tip de control	Comutare
Semnalizare locala	Indicatie ON/OFF
Mod de montare	Fix
Suport de montare	Sina DIN simetrica, 35 mm
Pieptene bare de distributie pe categorii de compatibilitate	Sus sau jos standard
Pasi de 9 mm	4
Greutate neta	0,256 kg
Culoare	Alb
Durabilitate mecanica	20000 cic
Durabilitate electrica	3000 cic L/R = 2 ms
Prevedere pentru blocare cu lacat	Poate fi blocat cu lacat
Descriere optiuni de blocare	In pozitia O
Cuplu de strangere	Circuit de alimentare 2,5 N.m sus sau jos
Protectie de scurgere la pamant	Fara

Mediu

Standarde	SR EN 60947-2 SR EN 60947-2
Grad de poluare	3 conformitate cu SR EN 60947-2 3 conformitate cu SR EN 60947-2
Categorie de supratensiune	IV
Tropicalizare	2 conformitate cu IEC 60068-2
Altitudine de functionare	2000 m
Temperatura ambientala de utilizare	-25…70 °C
Temperatura de depozitare	-40…85 °C

Unitati de ambalare

Unitate de masura pentru prima forma de impachetare	Db
Numar unitati in prima forma de impachetare	1
Inaltime prima forma de impachetare	7,3 cm
Latime prima forma de impachetare	3,2 cm
Lungime prima forma de impachetare	8,5 cm
Greutate prima forma de impachetare	240 g
Unitate de masura pentru a doua forma de impachetare	Gyári csomagolás
Numar unitati in a doua forma de impachetare	6
Inaltime a doua forma de impachetare	9 cm

Latime a doua forma de impachetare	8 cm
Lungime a doua forma de impachetare	22 cm
Greutate a doua forma de impachetare	1,442 kg
Unitate de masura pentru a treia forma de impachetare	Doboz
Numar unitati in a treia forma de impachetare	72
Inaltime a treia forma de impachetare	30 cm
Latime a treia forma de impachetare	30 cm
Lungime a treia forma de impachetare	40 cm
Greutate a treia forma de impachetare	17,791 kg

Sustenabilitatea ofertei

Stare ofertă sustenabilă	Produs Green Premium
Regulamentul REACH	Declaratia REACH
Conform REACh fara SVHC	Da
Directiva RoHS UE	Conform Declaratia RoHS UE
Fara metale grele toxice	Da
Fara mercur	Da
Regulamentul RoHS China	Declaratia RoHS China Declaratia proactiva RoHS China (in afara domeniului de aplicare a RoHS China)
Informatii privind scutirea de la RoHS	Da
Raport de mediu	Profilul ambiental al produsului

Garanţie contractuala

Garantie	18 months

Substitutii recomandate

Fişă tehnică produs

Specificatii

Intreruptor miniatura, C60H, 2 poles, 6 A, curba C

A9N61526

Principal

Gama	Acti9
Nume produs	Acti9 C60H-DC
Tip produs sau componenta	Miniature circuit-breaker
Nume scurt al dispozitivului	C60H-DC
Domeniu de utilizare al dispozitivului	Distributie
Descriere poli	2P
Numarul polilor protejati	2
[In] calibru	6 A la 25 °C
Tip retea electrica	C.c.
Tehnologie unitate de declansare	Termo-magnetic
Cod pentru curba	C
Capacitate de rupere	10 kA Icu la 440 V c.c. conformitate cu SR EN 60947-2 10 kA Icu la 440 V c.c. conformitate cu SR EN 60947-2 6 kA Icu la 500 V c.c. conformitate cu SR EN 60947-2 6 kA Icu la 500 V c.c. conformitate cu SR EN 60947-2 20 kA Icu la 220 V c.c. conformitate cu GB 14048.2 20 kA Icu la 220 V c.c. conformitate cu SR EN 60947-2 20 kA Icu la 250 V c.c. conformitate cu GB 14048.2 20 kA Icu la 250 V c.c. conformitate cu SR EN 60947-2
Categorie de utilizare	Categoria A conformitate cu SR EN 60947-2 Categoria A conformitate cu SR EN 60947-2
Adecvare pentru izolatie	Da conformitate cu SR EN 60947-2 Da conformitate cu SR EN 60947-2

Suplimentar

Frecventa retea electrica	50/60 Hz
[Ue] tensiune nominala de functionare	500 V c.c.
[Ics] capacitatea nominala de rupere in serviciu	15 kA 75 % conformitate cu SR EN 60947-2 - 220 V c.c. 15 kA 75 % conformitate cu SR EN 60947-2 - 220 V c.c. 15 kA 75 % conformitate cu SR EN 60947-2 - 250 V c.c. 15 kA 75 % conformitate cu SR EN 60947-2 - 250 V c.c. 4,5 kA 75 % conformitate cu SR EN 60947-2 - 500 V c.c. 4,5 kA 75 % conformitate cu SR EN 60947-2 - 500 V c.c. 7,5 kA 75 % conformitate cu SR EN 60947-2 - 440 V c.c. 7,5 kA 75 % conformitate cu SR EN 60947-2 - 440 V c.c.
[Ui] tensiune nominala de izolatie	500 V c.c. conformitate cu SR EN 60947-2 500 V c.c. conformitate cu SR EN 60947-2

[Uimp] tensiune nominala de tinere la impuls	6 kV conformitate cu SR EN 60947-2 6 kV conformitate cu SR EN 60947-2
Indicator de pozitie contact	Da
Tip de control	Comutare
Semnalizare locala	Indicatie ON/OFF
Mod de montare	Fix
Suport de montare	Sina DIN simetrica, 35 mm
Pieptene bare de distributie pe categorii de compatibilitate	Sus sau jos standard
Pasi de 9 mm	4
Greutate neta	0,256 kg
Culoare	Alb
Durabilitate mecanica	20000 cic
Durabilitate electrica	3000 cic 500 V c.c. 6000 cic 500 V c.c.
Prevedere pentru blocare cu lacat	Poate fi blocat cu lacat
Descriere optiuni de blocare	In pozitia O
Cuplu de strangere	Circuit de alimentare 2,5 N.m sus sau jos
Protectie de scurgere la pamant	Fara

Mediu

Standarde	SR EN 60947-2 SR EN 60947-2
Grad de poluare	3 conformitate cu SR EN 60947-2 3 conformitate cu SR EN 60947-2
Categorie de supratensiune	IV
Tropicalizare	2 conformitate cu IEC 60068-2
Altitudine de functionare	2000 m
Temperatura ambientala de utilizare	-25…70 °C
Temperatura de depozitare	-40…85 °C

Unitati de ambalare

Unit Type of Package 1	PCE
Package 1 Length	8,5 cm
Number of Units in Package 1	1
Package 3 Width	9,0 cm
Package 3 Weight	1,398 kg
Package 2 Width	80,0 cm
Package 2 Height	80,0 cm
Package 2 Weight	149,624 kg
Number of Units in Package 3	6
Unit Type of Package 3	BB1
Package 3 Height	8,0 cm
Package 3 Length	22,0 cm
Package 1 Width	3,6 cm

Package 1 Height	7,5 cm
Package 1 Weight	225,0 g
Number of Units in Package 2	576
Unit Type of Package 2	P12
Package 2 Length	120,0 cm

Sustenabilitatea ofertei

Stare ofertă sustenabilă	Produs Green Premium
Regulamentul REACH	Declaratia REACH
Conform REACh fara SVHC	Da
Directiva RoHS UE	Conform Declaratia RoHS UE
Fara metale grele toxice	Da
Fara mercur	Da
Informatii privind scutirea de la RoHS	Da
Regulamentul RoHS China	Declaratia RoHS China Declaratia proactiva RoHS China (in afara domeniului de aplicare a RoHS China)
Raport de mediu	Profilul ambiental al produsului

Garanţie contractuala

Garantie	18 luni

Fişă tehnică produs

Specificatii

Acti9, Contact Auxiliar Oc Plus 1 Sd Si Of C.A, C.C

A9N26929

Principal

Gama de produse	Acti 9
Tip produs sau componenta	Contact comutator dublu sau de defect
Nume scurt al dispozitivului	OF si OF sau OF si SD
Compozitie contacte de semnalizare	2 C/O
[In] curent nominal	DC-12 1 A at 130 V, c.c. DC-12 2 A at 48 V, c.c. DC-12 6 A at 24 V, c.c. AC-12 3 A at 415 V, c.a. 50/60 Hz AC-12 6 A at 240 V, c.a. 50/60 Hz
Pasi de 9 mm	1

Suplimentar

Mod de montare	Fix
Suport de montare	Sina DIN
Pieptene bare de distributie pe categorii de compatibilitate	nu
Inaltime	90 mm
Latime	9 mm
Adancime	73,5 mm
Greutate neta	38 g
Culoare	Alb
Conexiuni - borne	Borna cu clema cu surub (top and bottom) 2 cablu(ri) 1,5 mm² - flexibil Borna cu clema cu surub (top and bottom) 1 cablu(ri) 0,5…2,5 mm² - rigid Borna cu clema cu surub (top and bottom) 2 cablu(ri) 1,5 mm² - flexibil cu pin
Lungimea de dezizolare a cablului	9 mm
Cuplu de strangere	1 N.m

Mediu

Standarde	SR EN 60947-5-1
Certificari produs	ASTA ASEFA LCIE KEMA
Grad de protectie IP	IP20 conformitate cu SR EN 60947-5-1

Grad de poluare	3 conformitate cu SR EN 60947-5-1
Tropicalizare	2 conformitate cu SR EN 60947-5-1
Temperatura ambientala de functionare	-25…50 °C
Temperatura de depozitare	-40…85 °C

Unitati de ambalare

Unitate de masura pentru prima forma de impachetare	Db
Numar unitati in prima forma de impachetare	1
Inaltime prima forma de impachetare	2,2 cm
Latime prima forma de impachetare	8 cm
Lungime prima forma de impachetare	9,2 cm
Greutate prima forma de impachetare	46 g
Unitate de masura pentru a doua forma de impachetare	Gyári csomagolás
Numar unitati in a doua forma de impachetare	12
Inaltime a doua forma de impachetare	8,7 cm
Latime a doua forma de impachetare	10 cm
Lungime a doua forma de impachetare	26,5 cm
Greutate a doua forma de impachetare	609 g
Unitate de masura pentru a treia forma de impachetare	Doboz
Numar unitati in a treia forma de impachetare	108
Inaltime a treia forma de impachetare	30 cm
Latime a treia forma de impachetare	30 cm
Lungime a treia forma de impachetare	40 cm
Greutate a treia forma de impachetare	5,94 kg

Sustenabilitatea ofertei

Stare ofertă sustenabilă	Produs Green Premium
Regulamentul REACH	Declaratia REACH
Conform REACh fara SVHC	Da
Directiva RoHS UE	Conform Declaratia RoHS UE
Fara metale grele toxice	Da
Fara mercur	Da
Regulamentul RoHS China	Declaratia RoHS China

	Declaratia proactiva RoHS China (in afara domeniului de aplicare a RoHS China)
Informatii privind scutirea de la RoHS	Da
Raport de mediu	Profilul ambiental al produsului
Profil circularitate	Informatii privind sfarsitul duratei de viata
WEEE	În Uniunea Europeana, produsele trebuie reciclate respectand sistemul specific de colectare a deseurilor si nu trebuie sa ajunga in pubelele de colectare a deseurilor menajere.

Garanţie contractuala

Garantie	18 months

Substitutii recomandate

FISA TEHNICA E-IAM
Intreruptor automat magnetotermic

Nr Crt.	Specificațiile tehnice impuse prin Caietul de sarcini	Corespondența propunerii tehnice cu specificațiile tehnice impuse prin Caietul de sarcini	Producător
0	1	2	3
1.	**Parametrii tehnici şi functionali:** Număr poli: 3; Tensiune nominala de tinere la impuls: 6 kVc.a. Tensiune nominala de utilizare: 690V c.a. Curent nominal : lu in funcție de motorul de protejat; Domeniu de reglaj declanșator de suprasarcina: 0,6-1xIu Capacitatea de rupere: minim 10kA, in funcție de curentul de scurtcircuit calculat in punctul respectiv; Curba de declanșare: In reglabil; Tensiune nominal: 230/400V; 50/60Hz-AC; Condiții de funcționare: Fără declasare pana la 50 grade; Anduranță mecanica: 100.000 de cicluri; Montaj: cu cleme pe șină DIN 35mm Gradul de protecție: IP20; Domeniu de temperatura: 0° C ... +40 °C Protecţie la scurtcircuit (magnetică) Protectie la suprasarcină (termică) Contacte de semnalizare defect; Contact semnalizare închis/deschis;	**Parametrii tehnici şi functionali:** Număr poli: 3; Tensiune nominala de tinere la impuls: 6 kVc.a. Tensiune nominala de utilizare: 690V c.a. Curent nominal : lu in funcție de motorul de protejat; Domeniu de reglaj declanșator de suprasarcina: 0,6-1xIu Capacitatea de rupere: minim 10kA, in funcție de curentul de scurtcircuit calculat in punctul respectiv; Curba de declanșare: In reglabil; Tensiune nominal: 230/400V; 50/60Hz-AC; Condiții de funcționare: Fără declasare pana la 50 grade; Anduranță mecanica: 100.000 de cicluri; Montaj: cu cleme pe șină DIN 35mm Gradul de protecție: IP20; Domeniu de temperatura: 0° C ... +40 °C Protecţie la scurtcircuit (magnetică) Protectie la suprasarcină (termică) Contacte de semnalizare defect; Contact semnalizare închis/deschis;	Schneider
2.	**Specificaţii de performanţă şi condiţii privind siguranta în exploatare:** Protecția terminalelor la atingere cu mana. Carcasă din material ABS; Parte frontală clasa 2	**Specificaţii de performanţă şi condiţii privind siguranta în exploatare:** Protecția terminalelor la atingere cu mana. Carcasă din material ABS; Parte frontală clasa 2	
3.	**Conditii privind conformitatea cu standarde relevante:** SR EN 60947-2 SR CEI 60947-4-1 SR EN 60529	**Conditii privind conformitatea cu standarde relevante:** SR EN 60947-2 SR CEI 60947-4-1 SR EN 60529	
4.	Condiţii de garanţie şi postgaranţie: Producătorul va garanta calitatea şi buna funcţionare a produsului timp de 24 luni de la punerea în funcţiune sau de 36 luni de la data livrarii. Produsul va corespunde normelor tehnice şi standardelor europene.	Condiţii de garanţie şi postgaranţie: Producătorul va garanta calitatea şi buna funcţionare a produsului timp de 24 luni de la punerea în funcţiune sau de 36 luni de la data livrarii. Produsul va corespunde normelor tehnice şi standardelor europene.	
5.	**Condiţii cu caracter tehnic:** Nu vor fi luate în consideraţie decât ofertele însoţite	**Condiţii cu caracter tehnic:** Nu vor fi luate în consideraţie decât ofertele însoţite	

	de documentaţie completă pentru selecţie şi montaj în limba română. Vor fi anexate:instrucţiuni de montaj (scheme de conectare, broşuri, cataloage); instrucţiuni de exploatare;buletine de încercări, verificări, probe; declaratie de conformitate.	de documentaţie completă pentru selecţie şi montaj în limba română. Vor fi anexate:instrucţiuni de montaj (scheme de conectare, broşuri, cataloage); instrucţiuni de exploatare;buletine de încercări, verificări, probe; declaratie de conformitate.	

Product data sheet

Specifications

Motor circuit breaker,TeSys Deca,3P,0.63-1A,thermal magnetic,screw clamp terminals,button control

GV2ME05

Main

Range of product	TeSys GV2
Range	TeSys Deca TeSys Deca
Device short name	GV2ME
Product name	TeSys GV2 TeSys Deca
Product or component type	Motor circuit breaker
Device application	Motor protection
Trip unit technology	Thermal-magnetic

Complementary

Poles description	3P
Network type	AC
Utilisation category	AC-3 conforming to IEC 60947-4-1 Category A conforming to IEC 60947-2
Network frequency	50/60 Hz conforming to IEC 60947-4-1
Fixing mode	35 mm symmetrical DIN rail: clipped Panel: screwed (with adaptor plate)
Operating position	Any position
Motor power kW	0.25 kW at 400/415 V AC 50/60 Hz 0.55 kW at 690 V AC 50/60 Hz
Breaking capacity	100 kA Icu at 230/240 V AC 50/60 Hz conforming to IEC 60947-2 100 kA Icu at 400/415 V AC 50/60 Hz conforming to IEC 60947-2 100 kA Icu at 440 V AC 50/60 Hz conforming to IEC 60947-2 100 kA Icu at 500 V AC 50/60 Hz conforming to IEC 60947-2 100 kA Icu at 690 V AC 50/60 Hz conforming to IEC 60947-2
[Ics] rated service short-circuit breaking capacity	100 % at 690 V AC 50/60 Hz conforming to IEC 60947-2 100 % at 500 V AC 50/60 Hz conforming to IEC 60947-2 100 % at 230/240 V AC 50/60 Hz conforming to IEC 60947-2 100 % at 440 V AC 50/60 Hz conforming to IEC 60947-2 100 % at 400/415 V AC 50/60 Hz conforming to IEC 60947-2
Control type	Push-button
[In] rated current	1 A
Thermal protection adjustment range	0.63…1 A
Magnetic tripping current	13 A
[Ue] rated operational voltage	690 V AC 50/60 Hz conforming to IEC 60947-2

[Ui] rated insulation voltage	690 V AC 50/60 Hz conforming to IEC 60947-2
[Ith] conventional free air thermal current	1 A conforming to IEC 60947-4-1
[Uimp] rated impulse withstand voltage	6 kV conforming to IEC 60947-2
Power dissipation per pole	2.5 W
Mechanical durability	100000 cycles
Electrical durability	100000 cycles for AC-3 at 415 V at 415 V
Maximum operating rate	25 cyc/h
Rated duty	Continuous conforming to IEC 60947-4-1
Tightening torque	1.7 N.m on screw clamp terminals
Mechanical robustness	Shocks: 30 Gn conforming to IEC 60068-2-27 Vibrations: 5 Gn, 5...150 Hz conforming to IEC 60068-2-6
Phase failure sensitivity	Yes conforming to IEC 60947-4-1
Height	89 mm
Width	45 mm
Depth	78.5 mm
Net weight	0.28 kg
Colour	Dark grey
Suitability for isolation	Yes conforming to IEC 60947-1 § 7-1-6

Environment

Standards	EN/IEC 60947-2 EN/IEC 60947-4-1
Product certifications	CCC UL CSA EAC ATEX BV LROS (Lloyds register of shipping) UKCA DNV-GL RINA
Climatic withstand	conforming to IACS E10
IK degree of protection	IK04
IP degree of protection	IP20 conforming to IEC 60529
Ambient air temperature for storage	-40…80 °C
Fire resistance	960 °C conforming to IEC 60695-2-11
Operating altitude	2000 m
Ambient air temperature for operation	-20…60 °C

Packing Units

Unit Type of Package 1	PCE
Package 1 Length	9.5 cm
Number of Units in Package 1	1
Package 3 Width	30 cm
Package 3 Weight	5.799 kg
Package 2 Width	80 cm

Package 2 Height	75 cm
Package 2 Weight	100.784 kg
Number of Units in Package 3	24
Unit Type of Package 3	S02
Package 3 Height	15 cm
Package 3 Length	40 cm
Package 1 Width	8.5 cm
Package 1 Height	4.5 cm
Package 1 Weight	231 g
Number of Units in Package 2	384
Unit Type of Package 2	P06
Package 2 Length	60 cm

Offer Sustainability

Sustainable offer status	Green Premium product
REACh Regulation	REACh Declaration
EU RoHS Directive	Compliant EU RoHS Declaration
Mercury free	Yes
RoHS exemption information	Yes
China RoHS Regulation	China RoHS declaration Product out of China RoHS scope. Substance declaration for your information
Environmental Disclosure	Product Environmental Profile
Circularity Profile	End of Life Information
WEEE	The product must be disposed on European Union markets following specific waste collection and never end up in rubbish bins
California proposition 65	WARNING: This product can expose you to chemicals including: Antimony oxide & Antimony trioxide, which is known to the State of California to cause cancer. For more information go to www.P65Warnings.ca.gov

Contractual warranty

Warranty	18 months

Thermal-Magnetic Tripping Curves for GV2ME and GV2P

Average Operating Times at 20 °C Related to Multiples of the Setting Current

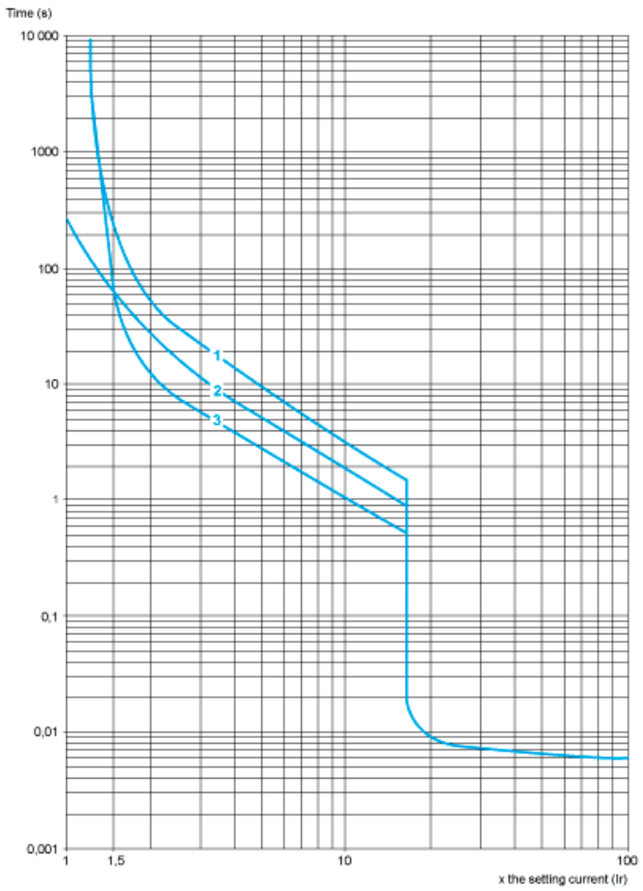

1 3 poles from cold state
2 2 poles from cold state
3 3 poles from hot state

Current Limitation on Short-Circuit for GV2ME and GV2P (3-Phase 400/415 V))

Dynamic Stress

I peak = f (prospective Isc) at 1.05 Ue = 435 V

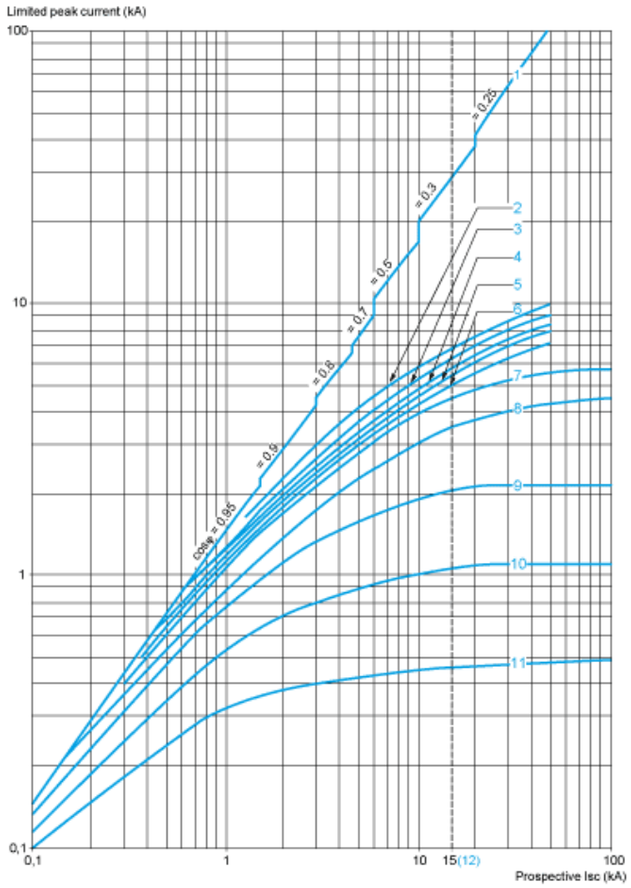

1	Maximum peak current
2	24-32 A
3	20-25 A
4	17-23 A
5	13-18 A
6	9-14 A
7	6-10 A
8	4-6.3 A
9	2.5-4 A
10	1.6-2.5 A
11	1-1.6 A
12	Limit of rated ultimate breaking capacity on short-circuit of GV2ME (14, 18, 23, and 25 A ratings).

Thermal Limit on Short-Circuit for GV2ME

Thermal Limit in kA^2s in the Magnetic Operating Zone

Sum of I^2dt = f (prospective Isc) at 1.05 Ue = 435 V

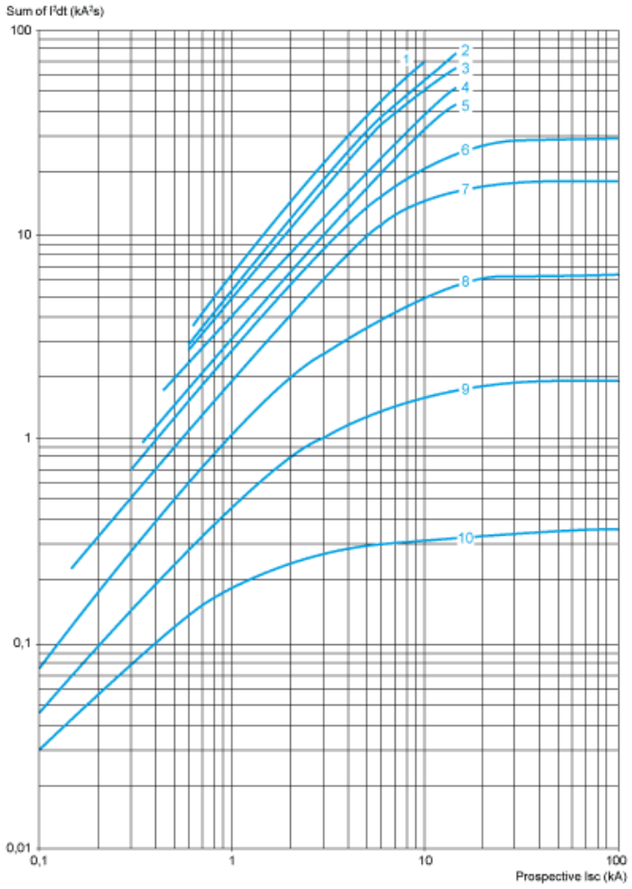

1	24-32 A
2	20-25 A
3	17-23 A
4	13-18 A
5	9-14 A
6	6-10 A
7	4-6.3 A
8	2.5-4 A
9	1.6-2.5 A
10	1-1.6 A

Dimension

GV2ME

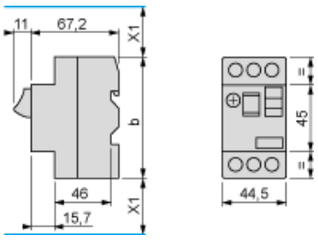

(1) Maximum
X1 Electrical clearance = 40 mm for Ue ≤ 690 V

	b
GV2ME••	89
GV2ME••3	101

Mounting

GV2ME

On 35 mm rail

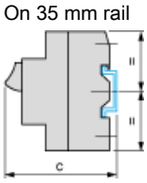

c = 78.5 on AM1 DP200 (35 x 7.5)

c = 86 on AM1 DE200, ED200 (35 x 15)

On panel with adapter plate GV2AF02

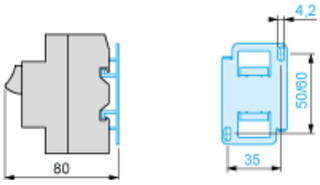

On pre-slotted plate AM1 PA

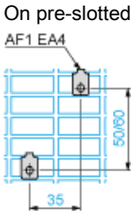

On rails DZ5 MB201

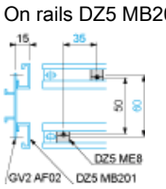

GV2AF01

Combination GV2ME + TeSys k contactor

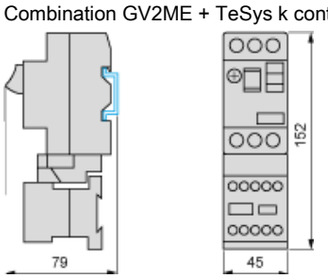

GV2AF3

Combination GV2ME + TeSys d contactor

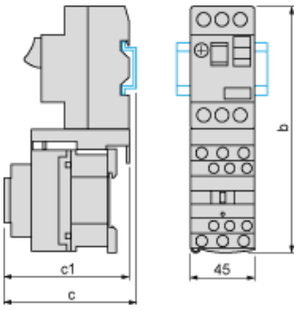

GV2ME +	LC1D09…D18	LC1D25 and D32
b	176.4	186.8
c1	94.1	100.4
c	99.6	105.9

GV2AF4 + LAD311

Combination GV2ME + TeSys d contactor

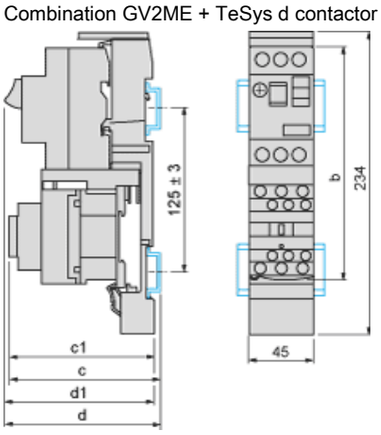

GV2ME +	LC1D09…D18	LC1D25 and D32
b	176.4	186.8
c1	103.1	136.4
c	135.6	141.9
d1	107	107
d	112.5	112.5

GV2ME + GV1L3 (Current Limiter)

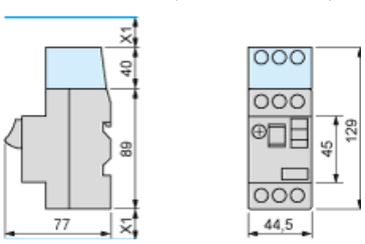

X1 = 10 mm for Ue = 230 V or 30 mm for 230 V < Ue ≤ 690 V

GV2ME•• and GV2RT

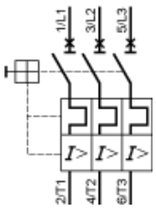

Connection of Undervoltage Trip for Dangerous Machines (Conforming to INRS) on GV2ME Only

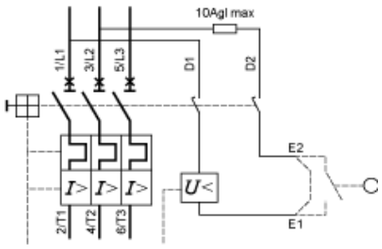

Fişă tehnică produs

Specificatii

Contact Auxiliar Tesys - 1 No + 1 Nc (Defect)

GVAD0110

Principal

Gama	TeSys TeSys Deca
Nume scurt al dispozitivului	GVAD
Tip produs sau componenta	Bloc de contacte auxiliar
Compatibilitate produs	GV2ME GV2L GV3P GV2P GV3L GV2LE GV2RT
Locul de montare	Partea stanga
Operare contacte auxiliare	Semnal de defect 1 NC
Compozitie contact pol	1 NO + 1 NC

Suplimentar

[Ui] tensiune nominala de izolatie	690 V conformitate cu IEC 60947-1 300 V conformitate cu UL 60947-1 300 V conformitate cu CSA C22.2 No 15
[Ue] tensiune nominala de functionare	48...690 V c.a. 24...240 V c.c.
[Ith] curent termic conventional in aer liber	6 A 2,5 A pentru fault signalling
Tip de protectie	Întreruptor automat GB2CB... GG fuse 10 A
Durabilitate mecanica	100000 cic
Curentul minim de comutare	5 mA
Tensiunea minima de comutare	17 V
Putere nominala de functionare in VA	300 VA la 48 V AC-15 - durabilitatea electrică: 100000 cic 414 VA la 690 V AC-15 - durabilitatea electrică: 100000 cic 500 VA la 110…127 V AC-15 - durabilitatea electrică: 100000 cic 500 VA la 500 V AC-15 - durabilitatea electrică: 100000 cic 650 VA la 440 V AC-15 - durabilitatea electrică: 100000 cic 720 VA la 230…240 V AC-15 - durabilitatea electrică: 100000 cic 850 VA la 380…415 V AC-15 - durabilitatea electrică: 100000 cic 36 VA la 24 V AC-14 - durabilitatea electrică: 1000 cic 48 VA la 48 V AC-14 - durabilitatea electrică: 1000 cic 72 VA la 110…127 V AC-14 - durabilitatea electrică: 1000 cic
Putere nominala de functionare in W	120 W la 240 V DC-13 - durabilitatea electrică: 100000 cic 140 W la 110 V DC-13 - durabilitatea electrică: 100000 cic 140 W la 24 V DC-13 - durabilitatea electrică: 100000 cic 180 W la 60 V DC-13 - durabilitatea electrică: 100000 cic 240 W la 48 V DC-13 - durabilitatea electrică: 100000 cic

	15 W la 48 V DC-13 - durabilitatea electrică: 1000 cic 24 W la 24 V DC-13 - durabilitatea electrică: 1000 cic 9 W la 60 V DC-13 - durabilitatea electrică: 1000 cic
Cuplu de strangere	1,4 N.m - pornit borne cu surub
Inaltime	89 mm
Latime	9,3 mm
Adancime	66 mm
Greutate neta	0,055 kg
Culoare	Gri inchis

Mediu

Caracteristica de mediu	Mediu normal
Certificari produs	UKCA

Unitati de ambalare

Unitate de masura pentru prima forma de impachetare	Db
Numar unitati in prima forma de impachetare	1
Inaltime prima forma de impachetare	8,700 cm
Latime prima forma de impachetare	1,500 cm
Lungime prima forma de impachetare	6,600 cm
Greutate prima forma de impachetare	47 g
Unitate de masura pentru a doua forma de impachetare	Gyári csomagolás
Numar unitati in a doua forma de impachetare	10
Inaltime a doua forma de impachetare	9,500 cm
Latime a doua forma de impachetare	15,000 cm
Lungime a doua forma de impachetare	10,000 cm
Greutate a doua forma de impachetare	500 g
Unitate de masura pentru a treia forma de impachetare	S02
Numar unitati in a treia forma de impachetare	60
Inaltime a treia forma de impachetare	15,000 cm
Latime a treia forma de impachetare	30,000 cm
Lungime a treia forma de impachetare	40,000 cm
Greutate a treia forma de impachetare	3,380 kg

Sustenabilitatea ofertei

Stare ofertă sustenabilă	Produs Green Premium

Regulamentul REACH	Declaratia REACH
Conform REACh fara SVHC	Da
Directiva RoHS UE	Conform Declaratia RoHS UE
Fara metale grele toxice	Da
Fara mercur	Da
Regulamentul RoHS China	Declaratia RoHS China Declaratia proactiva RoHS China (in afara domeniului de aplicare a RoHS China)
Informatii privind scutirea de la RoHS	Da
Raport de mediu	Profilul ambiental al produsului
Profil circularitate	Informatii privind sfarsitul duratei de viata
WEEE	În Uniunea Europeana, produsele trebuie reciclate respectand sistemul specific de colectare a deseurilor si nu trebuie sa ajunga in pubelele de colectare a deseurilor menajere.

Garanţie contractuala

Garantie	18 months

Substitutii recomandate

FIȘĂ TEHNICĂ E-PLC - PLC pentru SRM

Nr Crt.	Specificațiile tehnice impuse prin Caietul de sarcini	Corespondența propunerii tehnice cu specificațiile tehnice impuse prin Caietul de sarcini	Producător
0	1	2	3
1.	**Parametrii tehnici şi funcţionali:** — PLC complet echipat (CPU, module I/O, porturi de comunicație), alimentare 24Vc.c.; — Intrări numerice 24 Vc.c. izolate optic minim 64; — Ieșiri numerice minim 8 — Intrări analogice cu izolare galvanică minim 8; — Intrările digitale, analogice și ieșirile digitale, analogice vor fi izolate galvanic atât pe partea de BUS cât și pe partea de semnal; — Memorie internă minim 4Mb (minim 3Mb program soft); — Porturi Ethernet minim 2; — Porturi RS 232/485 (configurabile ca tip si parametrii de comunicație) minim 6 – se vor asigura minim 1 port de rezervă pentru dezvoltări ulterioare; — Protocoale de comunicație utilizate: Modbus RTU (cu sistemele subordonate), Modbus TCP/IP, IEC 60870-5-101; IEC 60870-5-104 (cu sistemele ierahice superioare). — Ceas intern pe baterie cu posibilitate de sincronizare prin protocol de comunicație NTP; — HMI cu ecran de minim 10 inch, multi-touch rezistiv, minim 256 culori, 640x480 pxl, memorie 96MB EPROM expandabil cu memorie SD card minim 32GB , tensiune de alimentare 24Vcc, Porturi: USB tip A-1 buc,, Port RS-232, RJ45 pentru Ethernet TCP/IP link, HMI-ul se va monta pe ușa tabloului; — Aplicație de programare conformă cu standardul IEC61131: Ladder (LD), Function Block (FB), Structured Text (ST), and Sequential Function Chart (SFC); — Soft de dezvoltare și aplicație pentru HMI conform cerinţelor din Caietul de Sarcini și licențe; — Soft de dezvoltare și aplicație soft automat programabil conform cerinţelor din Caietul de Sarcini și licențe; — Suport stocare firmware/software tip flash; — temperatura de funcționare: cel puțin intervalul -5°C la +50°C — umiditatea relativă:cel puțin de 80% la +20°C	**Parametrii tehnici şi funcţionali:** — PLC complet echipat (CPU, module I/O, porturi de comunicație), alimentare 24Vc.c.; — Intrări numerice 24 Vc.c. izolate optic minim 64; — Ieșiri numerice minim 8 — Intrări analogice cu izolare galvanică minim 8; — Intrările digitale, analogice și ieșirile digitale, analogice vor fi izolate galvanic atât pe partea de BUS cât și pe partea de semnal; — Memorie internă minim 4Mb (minim 3Mb program soft); — Porturi Ethernet minim 2; — Porturi RS 232/485 (configurabile ca tip si parametrii de comunicație) minim 6 – se vor asigura minim 1 port de rezervă pentru dezvoltări ulterioare; — Protocoale de comunicație utilizate: Modbus RTU (cu sistemele subordonate), Modbus TCP/IP, IEC 60870-5-101; IEC 60870-5-104 (cu sistemele ierahice superioare). — Ceas intern pe baterie cu posibilitate de sincronizare prin protocol de comunicație NTP; — HMI cu ecran de minim 10 inch, multi-touch rezistiv, minim 256 culori, 640x480 pxl, memorie 96MB EPROM expandabil cu memorie SD card minim 32GB , tensiune de alimentare 24Vcc, Porturi: USB tip A-1 buc,, Port RS-232, RJ45 pentru Ethernet TCP/IP link, HMI-ul se va monta pe ușa tabloului; — Aplicație de programare conformă cu standardul IEC61131: Ladder (LD), Function Block (FB), Structured Text (ST), and Sequential Function Chart (SFC); — Soft de dezvoltare și aplicație pentru HMI conform cerinţelor din Caietul de Sarcini și licențe; — Soft de dezvoltare și aplicație soft automat programabil conform cerinţelor din Caietul de Sarcini și licențe; — Suport stocare firmware/software tip flash; — temperatura de funcționare: cel puțin intervalul -5°C la +50°C — umiditatea relativă:cel puțin de 80% la +20°C altitudinea maximă: ≤1000 md	**PHOENIX CONTACT**

	altitudinea maximă: ≤1000 md **Sursă stabilizată de tensiune 24V/ 20A (2buc)** — Montaj aparent, în dulap, pe șină DIN35; — Eficiență >91% ; — MTBF > 500.000 h (IEC61709) — Tensiune de alimentare: 160-264Vc.a ; — Frecvență tensiune intrare 48-63 Hz — Tensiune de ieșire tipic 24 Vcc +1%; — Curent maxim de vârf 25A; — Siguranță ieșire 20A; — Putere 480W; — Contact monitorizare stare; — Standarde EN 61000, EN 60204-1,60950-1, EN 50178 **Modul inteligent gestionare surse de tensiune:** — Montaj aparent, în dulap, pe șină DIN35; — Curent de intrare 2x20A; — Curent de ieșire 40A; — Gestionare inteligentă tensiune de ieșire; — Tehnologie ACB (auto current balancing); — Monitorizare permanentă a redundanței; — Tensiune de intrare tipic 2x24 Vcc +1% — Tensiune ajustabilă pe domeniul 18-29,5 Vcc — Contact monitorizare stare; — Standarde EN 61000, EN 60204-1,60950-1, EN 50178 **Izolare galvanică între semnalul de intrare și cele de ieșire** — Precizie de măsurare : max. 0,1% din capătul de scală — Timp de creștere(10...90%) <50ms — Grad de protecție: minim IP20 — Bloc cu terminale, protecție la inversarea polarității — Temperatura de lucru : -25°C...+60°C Standarde EN 61000, EN 60529-1,61326-1	**Sursă stabilizată de tensiune 24V/ 20A (2buc)** — Montaj aparent, în dulap, pe șină DIN35; — Eficiență >91% ; — MTBF > 500.000 h (IEC61709) — Tensiune de alimentare: 160-264Vc.a ; — Frecvență tensiune intrare 48-63 Hz — Tensiune de ieșire tipic 24 Vcc +1%; — Curent maxim de vârf 25A; — Siguranță ieșire 20A; — Putere 480W; — Contact monitorizare stare; — Standarde EN 61000, EN 60204-1,60950-1, EN 50178 **Modul inteligent gestionare surse de tensiune:** — Montaj aparent, în dulap, pe șină DIN35; — Curent de intrare 2x20A; — Curent de ieșire 40A; — Gestionare inteligentă tensiune de ieșire; — Tehnologie ACB (auto current balancing); — Monitorizare permanentă a redundanței; — Tensiune de intrare tipic 2x24 Vcc +1% — Tensiune ajustabilă pe domeniul 18-29,5 Vcc — Contact monitorizare stare; — Standarde EN 61000, EN 60204-1,60950-1, EN 50178 **Izolare galvanică între semnalul de intrare și cele de ieșire** — Precizie de măsurare : max. 0,1% din capătul de scală — Timp de creștere(10...90%) <50ms — Grad de protecție: minim IP20 — Bloc cu terminale, protecție la inversarea polarității — Temperatura de lucru : -25°C...+60°C Standarde EN 61000, EN 60529-1,61326-1	
2.	**Specificaţii de performanţă şi condiţii privind siguranta în exploatare:** - Conform caiet de sarcini.	**Specificaţii de performanţă şi condiţii privind siguranta în exploatare:** - Conform caiet de sarcini.	
3.	**Condiţii privind conformitatea cu standarde relevante**: - ISO 9001:2008 - Standard de management al calităţii; - SR EN 60439-1:2001 +A 1:2004 - Ansambluri de aparataj de joasă tensiune. Partea 1: Ansamblu prefabricat de aparataj de joasă tensiune şi	**Condiţii privind conformitatea cu standarde relevante**: - ISO 9001:2008 - Standard de management al calităţii; - SR EN 60439-1:2001 +A 1:2004 - Ansambluri de aparataj de joasă tensiune. Partea 1: Ansamblu prefabricat de aparataj de joasă tensiune şi ansamblu	

	ansamblu derivat dintr-un ansamblu prefabricat de aparataj de joasă tensiune; - SR EN 60204-1:2007 - Securitatea maşinilor. Echipamentul electric al maşinilor. Partea 1: Cerinţe generale; - SR HD 60364-5-54-2007 - Instalatii electrice de joasă tensiune. Partea 5-54: Alegerea şi montarea echipamentelor electrice. - Sisteme de legare la pământ, conductoare de protecţie şi conductoare de echipotentializare; - Compatibilitate electromagnetica conform IEC 61000-4-3	derivat dintr-un ansamblu prefabricat de aparataj de joasă tensiune; - SR EN 60204-1:2007 - Securitatea maşinilor. Echipamentul electric al maşinilor. Partea 1: Cerinţe generale; - SR HD 60364-5-54-2007 - Instalatii electrice de joasă tensiune. Partea 5-54: Alegerea şi montarea echipamentelor electrice. - Sisteme de legare la pământ, conductoare de protecţie şi conductoare de echipotentializare; - Compatibilitate electromagnetica conform IEC 61000-4-3	
4.	**Condiţii de garanţie şi postgaranţie:** - Producătorul va garanta calitatea şi buna funcţionare a produsului timp de 24 luni de la punerea în funcţiune sau de 36 luni de la data livrarii. - Produsul va corespunde normelor tehnice şi standardelor europene.	**Condiţii de garanţie şi postgaranţie:** - Producătorul va garanta calitatea şi buna funcţionare a produsului timp de 24 luni de la punerea în funcţiune sau de 36 luni de la data livrarii. - Produsul va corespunde normelor tehnice şi standardelor europene.	
5.	**Condiţii cu caracter tehnic:** - Nu vor fi luate în consideraţie decât ofertele însoţite de documentaţie completă pentru selecţie şi montaj în limba română. - Vor fi anexate: • instrucţiuni de montaj (scheme de conectare, broşuri, cataloage); • instrucţiuni de exploatare; • buletine de încercări, verificări, probe; • declaratie de conformitate.	**Condiţii cu caracter tehnic:** - Nu vor fi luate în consideraţie decât ofertele însoţite de documentaţie completă pentru selecţie şi montaj în limba română. - Vor fi anexate: • instrucţiuni de montaj (scheme de conectare, broşuri, cataloage); • instrucţiuni de exploatare; • buletine de încercări, verificări, probe; • declaratie de conformitate.	

Controller - AXC F 1152 - 1151412

Please be informed that the data shown in this PDF Document is generated from our Online Catalog. Please find the complete data in the user's documentation. Our General Terms of Use for Downloads are valid
(http://phoenixcontact.com/download)

PLCnext Control for the direct control of Axioline F I/Os. With two Ethernet interfaces. Complete with connector and bus base module.

Product Description

The controllers of the PLCnext Control AXC F 1152 family for the Axioline I/O system are fast, robust, and easy to use. They were consistently designed for maximum performance, easy handling and use in harsh industrial environments.

Your advantages

- PROFINET support
- Connection to PROFICLOUD
- Numerous protocols supported such as: http, https, FTP, SNTP, SNMP, SMTP, SQL, MySQL, DCP, etc.
- Up to 63 AXIO I/O modules can be mounted side by side
- 2 x Ethernet interfaces (integrated switch)
- Increased resistance to EMI
- Extended temperature range of -25°C ... +60°C
- Linux operating system
- Supports high-level languages

Key Commercial Data

Packing unit	1 pc
GTIN	4 063151 149420
GTIN	4063151149420
Weight per Piece (excluding packing)	225.600 g
Custom tariff number	85371091
Country of origin	Germany

Technical data

Note

Utilization restriction	EMC: class A product, see manufacturer's declaration in the download area

Controller - AXC F 1152 - 1151412

Technical data

Dimensions

Width	45 mm
Height	126.93 mm
Depth	75 mm

Ambient conditions

Degree of protection	IP20
Ambient temperature (operation)	-25 °C ... 60 °C up to 2000 m above mean sea level (observe derating)
	-25 °C ... 55 °C up to 3000 m above mean sea level (observe derating)
	≤ 55 °C (with max. 1 A on U_{Bus})
	> 55 °C ... 60 °C (only in conjunction with an Axioline F power module AXL F PWR 1H (order number 2688297))
Ambient temperature (storage/transport)	-40 °C ... 85 °C
Permissible humidity (operation)	5 % ... 95 % (according to DIN EN 61131-2)
Permissible humidity (storage/transport)	5 % ... 95 % (according to DIN EN 61131-2)
Air pressure (operation)	70 kPa ... 106 kPa (up to 3000 m above sea level)
Air pressure (storage/transport)	58 kPa ... 106 kPa (up to 4500 m above mean sea level)
Shock	30g, 11 ms period, half-sine shock pulse, according to IEC 60068-2-27
Vibration (operation)	5g

Control system

Engineering tool	PLCnext Engineer
	Eclipse
Programming languages supported	Programming in acc. with IEC 61131-3
	C++
	C#
	Java
	Manufacturer-specific
Supports cloud computing	yes
Cloud platform	Proficloud

General data

Processor	Arm® Cortex®-A9 1x 800 MHz
Operating system	Linux
RAM	512 Mbyte DDR3 SDRAM

IEC 61131 runtime system

Engineering tool	PLCnext Engineer
	Eclipse
Program memory	8 Mbyte
Mass storage	16 Mbyte
Retentive mass storage	48 kByte (NVRAM)
Realtime clock	Yes
Accuracy realtime clock	1.73 s/day = 20 ppm at 25 °C

Controller - AXC F 1152 - 1151412

Technical data

Fieldbus function

Amount of process data	max. 8192 Bit (per station)
	max. 4096 Bit (Axioline F local bus (input))
	max. 4096 Bit (Axioline F local bus (output))
Number of supported devices	max. 63 (per station)
Number of local bus devices that can be connected	max. 63 (observe current consumption)
Program memory	8 Mbyte

Data interfaces

Interface	Axioline F local bus
Number	1
Connection method	Bus base module
Transmission speed	100 Mbps
Interface	Ethernet
Number	2
Connection method	RJ45 jack
Transmission speed	10/100 Mbps (full duplex)
Protocols supported	HTTP
	HTTPS
	SFTP
	SNTP
	SNMP
	IPsec
	syslog
	OPC UA

PROFINET

Device function	PROFINET controller, PROFINET device
Specification	Version 2.3
Update rate	min. 1 ms (4 devices)
	min. 4 ms (16 devices)

Mechanical design

Weight	215 g
Diagnostics display	No
Controller redundancy	No
Safety function	No

Standards and Regulations

Vibration (storage/transport)	5g
Shock	30g, 11 ms period, half-sine shock pulse, according to IEC 60068-2-27
Vibration (operation)	5g
Shock (operation)	10g (Bump endurance test according to DIN EN 60068-2-27)

Controller - AXC F 1152 - 1151412

Technical data

Environmental Product Compliance

REACh SVHC	Lead 7439-92-1

AXL F BP SE6
AXL F BP SE4

Axioline F, backplane, 6 or 4 slots for Axioline Smart Elements

Data sheet
108759_en_10

 2024-04-08

1 Description

The Axioline F backplane is intended for use in a station that is opened by an Axioline F bus coupler or an Axiocontrol.

Depending on type, the backplane has six or four “Smart Element Interface” slots for accepting Axioline Smart Elements.

Features

- Preparing the communications power supply for the plugged-in Axioline Smart Elements
- Supply feed-in for the peripheral supply U_P for the plugged in Axioline Smart Elements

This data sheet is only valid in association with the UM EN AXL F SYS INST user manual.

Make sure you always use the latest documentation.
This is available for downloading at the following addresses:
phoenixcontact.com/product/1088136
phoenixcontact.com/product/1088135

2 Table of contents

3 Ordering data

Description	Type	Item no.	Pcs./Pkt.
Axioline F, Backplane, 6 slots for Axioline Smart Elements, transmission speed in the local bus: 100 Mbps, degree of protection: IP20	AXL F BP SE6	1088136	1
Axioline F, Backplane, 4 slots for Axioline Smart Elements, transmission speed in the local bus: 100 Mbps, degree of protection: IP20	AXL F BP SE4	1088135	1

Accessories	Type	Item no.	Pcs./Pkt.
Axioline Smart Elements, Slot cover, Diagnostic function, degree of protection: IP20	AXL SE SC-A	1088134	1
Axioline Smart Elements, Slot cover, degree of protection: IP20	AXL SE SC	1167159	1
Quick mounting end clamp for NS 35/7,5 DIN rail or NS 35/15 DIN rail, with marking option, width: 9.5 mm, color: gray (Mounting)	CLIPFIX 35	3022218	50
End clamp, for end support of UKH 50 to UKH 240, is pushed onto DIN rail NS 35 and fixed with 2 screws, width: 10 mm, color: aluminum (Mounting)	E/AL-NS 35	1201662	10
Axioline shield connection set (contains 2 shield bus holders and 2 SK 5 shield connection clamps)	AXL SHIELD SET	2700518	1
Label, Roll, transparent/black, unlabeled, can be labeled with: THERMOFOX, THERMOMARK GO, THERMOMARK GO.K, mounting type: adhesive, lettering field size: continuous x 3.2 mm, Number of individual labels: 1 (Marking)	MM-TML (EX4,2)R C1 TR/BK	0803979	1
Marker strip, Roll, white, unlabeled, can be labeled with: THERMOMARK E.300 (D)/600 (D), THERMOMARK ROLL 2.0, THERMOMARK ROLL, THERMOMARK ROLL X1, THERMOMARK ROLLMASTER 300/600, THERMOMARK X1.2, mounting type: adhesive, lettering field size: continuous x 5 mm, Number of individual labels: 10 (Marking)	SK 5,0 WH:REEL	0805221	1

Accessories	Type	Item no.	Pcs./Pkt.
Marker for terminal blocks, Strip, white, unlabeled, can be labeled with: TOPMARK NEO, TOPMARK LASER, BLUEMARK ID COLOR, BLUEMARK ID, BLUEMARK CLED, THERMOMARK PRIME, THERMOMARK CARD 2.0, THERMOMARK CARD, mounting type: snapped, for terminal block width: 5 mm, lettering field size: 5 x 12 mm, Number of individual labels: 24 (Marking)	UM6M-TM (5X12)	0830928	10
Marker for terminal blocks, for marking ABB terminal blocks from the SNK series, Sheet, white, unlabeled, can be labeled with: THERMOMARK CARD, THERMOMARK CARD 2.0, THERMOMARK PRIME, BLUEMARK ID, BLUEMARK ID COLOR, TOPMARK LASER, TOPMARK NEO, mounting type: snapped, for terminal block width: 5.2 mm, lettering field size: 4.17 x 11.3 mm (Marking)	UCT6M-TM 5	0830756	10

Documentation	Type	Item no.	Pcs./Pkt.
User manual, English, Axioline F: System and installation	UM EN AXL F SYS INST	-	-
User manual, English, Axioline F: Diagnostic registers, and error messages	UM EN AXL F SYS DIAG	-	-

4 Applicable Axioline Smart Elements and their U_{Bus} current consumption

Type	Item no.	Current consumption from U_{bus}
AXL SE AI4 I 0-20	1296378	max. 46 mA
AXL SE AI4 I 4-20	1088062	max. 46 mA
AXL SE AI4 U 0-10	1088104	max. 46 mA
AXL SE AI4 U -10-10	1487836	max. 46 mA
AXL SE AO4 I 0-20	1296372	max. 46 mA
AXL SE AO4 I 4-20	1088123	max. 46 mA
AXL SE AO4 U 0-10	1088126	max. 46 mA
AXL SE AO4 U -10-10	1487835	max. 46 mA
AXL SE CNT1	1088131	max. 53 mA
AXL SE DI16/1	1088127	max. 41 mA
AXL SE DI16/1 NPN	1105559	max. 60 mA
AXL SE DO16/1	1088129	max. 45 mA
AXL SE DO16/1 NPN	1105560	max. 79 mA
AXL SE DO4/2 2A EF	1181790	max. 42 mA
AXL SE DOR2 W 230	1105562	max. 47 mA
AXL SE INC1 ASYM	1182185	max. 60 mA
AXL SE INC1 SYM	1088130	max. 60 mA
AXL SE IOL4	1088132	max. 68 mA
AXL SE PD16 24V	1337223	max. 35 mA
AXL SE PD16 GND	1337224	max. 30 mA
AXL SE PD8/8 24V/GND	1337225	max. 35 mA
AXL SE PSDI8/3	1079241	max. 140 mA
AXL SE PSDO4/2 2A	1079231	max. 120 mA
AXL SE RS485	1088128	max. 46 mA
AXL SE RS232	1181787	max. 51 mA
AXL SE RTD4 PT100	1088106	max. 47 mA
AXL SE RTD4 PT1000	1182190	max. 49 mA
AXL SE SC	1167159	max. 30 mA
AXL SE SC-A	1088134	max. 30 mA
AXL SE SSDI8/3	1190012	max. 140 mA
AXL SE SSDO4/2 2A	1190017	max. 120 mA
AXL SE UTH4 EF	1182068	max. 49 mA

5 Technical data

Dimensions (nominal sizes in mm): AXL F BP SE6

Axioline F backplane

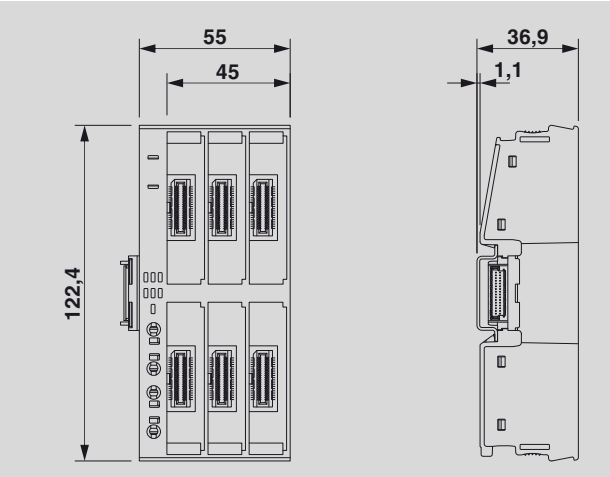

Width	55 mm
Height	122.4 mm
Depth	36.9 mm
Note on dimensions	The depth applies when a TH 35-7.5 DIN rail is used (in accordance with EN 60715).

Axioline F backplane with Axioline Smart Elements plugged in

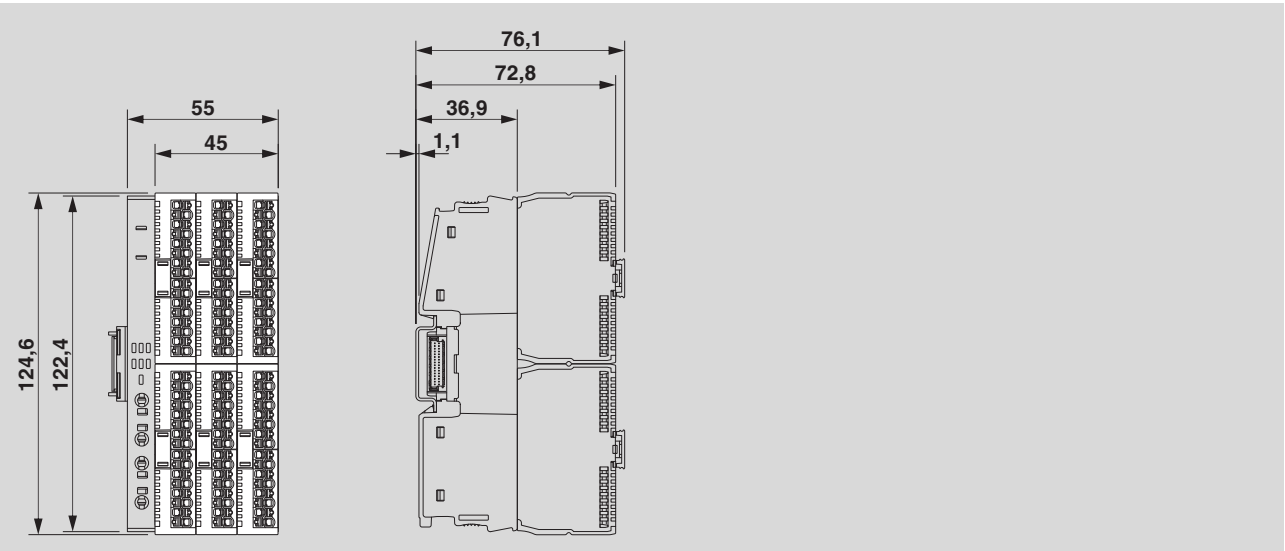

Width	55 mm
Height	124.6 mm
Depth	76.1 mm
Note on dimensions	The depth applies when a TH 35-7.5 DIN rail is used (in accordance with EN 60715).

Dimensions (nominal sizes in mm): AXL F BP SE4

Axioline F backplane

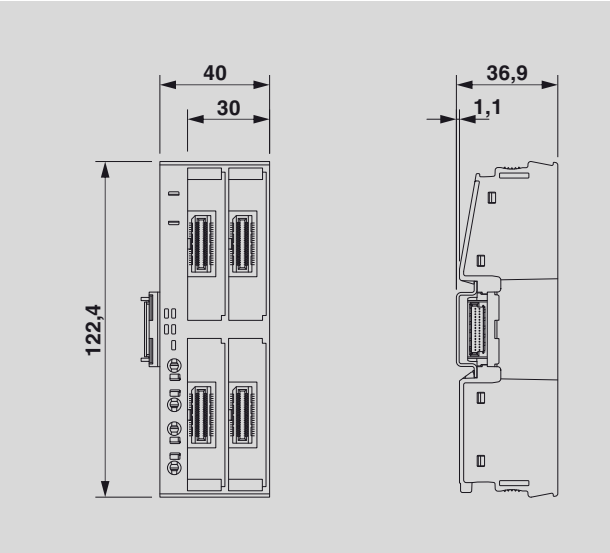

Width	40 mm
Height	122.4 mm
Depth	36.9 mm
Note on dimensions	The depth applies when a TH 35-7.5 DIN rail is used (in accordance with EN 60715).

Axioline F backplane with Axioline Smart Elements plugged in

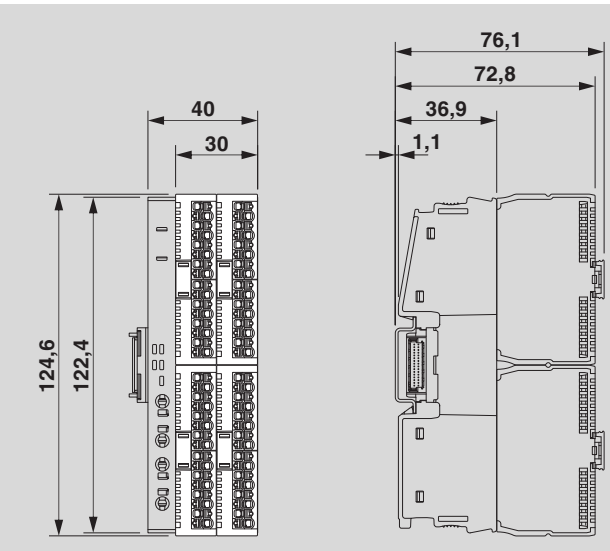

Width	40 mm
Height	124.6 mm
Depth	76.1 mm
Note on dimensions	The depth applies when a TH 35-7.5 DIN rail is used (in accordance with EN 60715).

General data	
Color	Housing: traffic grey A (RAL 7042)
Weight	AXL F BP SE6: 112 g AXL F BP SE4: 87 g
Ambient temperature (operation)	-25 °C ... 60 °C
Ambient temperature (storage/transport)	-40 °C ... 85 °C
Permissible humidity (operation)	5 % ... 95 % (non-condensing)
Permissible humidity (storage/transport)	5 % ... 95 % (non-condensing)
Air pressure (operation)	70 kPa ... 106 kPa (up to 3000 m above sea level)
Air pressure (storage/transport)	70 kPa ... 106 kPa (up to 3000 m above sea level)
Degree of protection	IP20
Protection class	III (IEC 61140, EN 61140, VDE 0140-1)
Overvoltage category	II (IEC 60664-1, EN 60664-1)
Degree of pollution	2 (IEC 60664-1, EN 60664-1)
Mounting type	DIN rail mounting
Mounting position	Wall mounting on horizontal or vertical DIN rail

Do not use the backplane in an atmosphere that contains corrosive gas.

Connection data: I/O supply feed-in (U_P)	
Connection method	Push-in connection
Conductor cross section, rigid	0.5 mm^2 ... 2.5 mm^2
Conductor cross section, flexible	0.5 mm^2 ... 2.5 mm^2
Conductor cross section [AWG]	20 ... 14
Stripping length	8 mm

Please observe the information provided on conductor cross sections in the “Axioline F: system and installation” user manual.

Interface: Axioline F local bus	
Number of interfaces	2
Connection method	Bus base module
Transmission speed	100 Mbps

Interface: Smart Element interface	
Number of interfaces	AXL F BP SE6: 6 AXL F BP SE4: 4
Connection method	Card edge connector

Axioline F local bus supply (U_{Bus})	
Supply voltage	5 V DC
Current consumption of Axioline Smart Elements	See table “Applicable Axioline Smart Elements and their U_{Bus} current consumption”.

Communications power supply of the Smart Elements (U_{SE})	
Supply voltage	using card edge connectors

I/O supply feed-in (U_P)	
Nominal supply voltage	24 V DC
Supply voltage range	19.2 V DC ... 30 V DC (including all tolerances, including ripple)
Current consumption	min. 1.5 mA (without connected Smart Elements, with nominal voltage) max. 16 A (provide external protection) max. 12 A (Applications with UL approval, external fusing)
Power consumption	max. 480 W max. 360 W (Applications with UL approval)
Surge protection	Suppressor diode
Protection	max. 16 A max. 12 A (Applications with UL approval)

NOTE: Damage to the electronics

Provide external protection for the module to ensure reverse polarity protection. If you use a fuse, the power supply unit must be capable of supplying four times the nominal current of the fuse. This ensures that the fuse trips reliably in the event of a fault.

In addition, observe the information on fuse protection in the data sheets for the Smart Element used.

Electrical isolation/isolation of the voltage areas	
Test section	**Test voltage**
5 V supply of the local bus (U_{Bus}) / 24 V supply (I/Os)	500 V AC, 50 Hz, 1 min.
5 V supply of the local bus (U_{Bus}) / functional ground	500 V AC, 50 Hz, 1 min.
24 V supply (I/O) / functional ground	500 V AC, 50 Hz, 1 min.

Mechanical tests	
Vibration resistance in accordance with EN 60068-2-6/IEC 60068-2-6	5g
Shock in accordance with EN 60068-2-27/IEC 60068-2-27	30g
Continuous shock in accordance with EN 60068-2-27/IEC 60068-2-27	10g

Conformance with EMC Directive 2014/30/EU	
Immunity test in accordance with EN IEC 61000-6-2	
Electrostatic discharge (ESD) IEC 61000-4-2	Criterion B, ±6 kV contact discharge, ±8 kV air discharge
Electromagnetic fields IEC 61000-4-3	Criterion A, Field intensity: 10 V/m
Fast transients (burst) IEC 61000-4-4	Criterion B, ±2 kV
Transient overvoltage (surge) IEC 61000-4-5	Criterion B, DC supply lines: ±0.5 kV/±1.0 kV (symmetrical/asymmetrical)
Conducted interference IEC 61000-4-6	Criterion A, Test voltage 10 V
Noise emission test in accordance with EN 61000-6-4/IEC 61000-6-4	Class A

NOTE: Risk of damage to equipment due to noise emissions

The backplane and Axioline Smart Elements to be plugged into the backplane are class A products. These can interfere with wireless reception in residential areas.
The operator must observe the requirements for noise emission for electrical and electronic equipment (EN 61000-6-4). Where necessary, appropriate protective measures should be taken.

Approvals	
For the current approvals, go to:	www.phoenixcontact.com/product/1088136 www.phoenixcontact.com/product/1088135

Manufacturer's declarations	
For the current manufacturer’s declarations, go to:	www.phoenixcontact.com/product/1088136 www.phoenixcontact.com/product/1088135

6 Internal circuit diagram

Figure 1 Basic circuit diagram

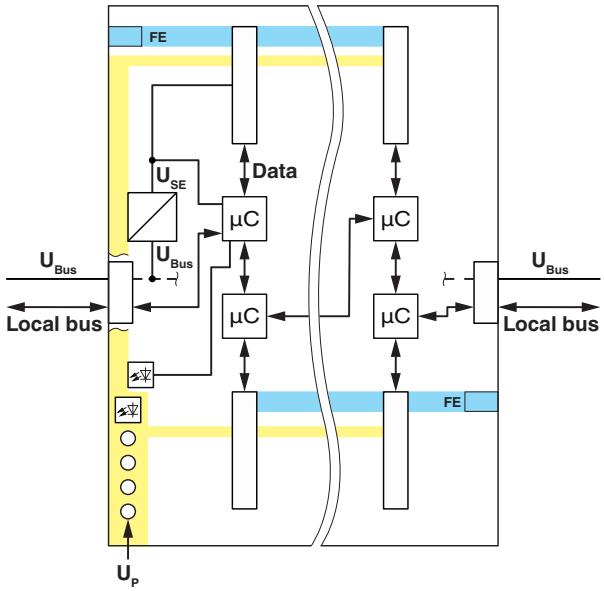

Key:

Local bus	Axioline F local bus
Data	Data transmission
U_{Bus}	Supply of the Axioline F local bus
U_{SE}	Communications power supply of the Smart Element
FE	Functional ground
U_P	I/O supply of the Smart Element
	Power supply unit
µC	Microcontroller
	LED
	Smart Element interface
	Electrically isolated areas

7 For your safety

7.1 Intended use

Use the backplane exclusively in accordance with the specifications in the data sheet and the “Axioline F: System and Installation” user manual.

7.2 Qualification of users

The use of products described in this data sheet is oriented exclusively to electrically skilled persons or persons instructed by them. The users must be familiar with the relevant safety concepts of automation technology as well as applicable standards and other regulations.

7.3 Working on the backplane or on a Smart Element

NOTE: Damage to contacts or malfunction

Before performing any work on the backplane or on a Smart Element, disconnect the voltage on the backplane and the Smart Element.

This means:

- Disconnect the connected I/O devices from the power.
- Switch off the I/O supply voltage U_P!
- Switch off the U_{Bus} and U_{SE} communications power.
  For the backplane, this means: switch off the voltage U_L for the Axioline F station. The communications power for the local bus (U_{Bus}) and for the Smart Element (U_{SE}) is generated from this.

7.4 Strain relief

NOTE: damage to the contacts

Physical overloads can result in damage to the terminal points.

- Relieve strain in the connected cables.

7.5 Applications with UL approval

CAUTION!

– The external circuits intended to be connected to this device shall be galvanically separated from the mains supply or hazardous live voltage by reinforced or double insulation and meet the requirements of SELV/PELV (Class III) circuits of UL/CSA/IEC 61010-1, UL/CSA/IEC 61010-2-201.

– The device has to be installed in the final safety enclosure, which has adequate rigidity according to UL 61010-1, UL 61010-2-201 and meets the requirements with respect to spread of fire.

Information:

To install the device in accordance with UL/CSA/IEC standard, the following notes must be observed.

– Equipment shall be protected by fuses, circuit-breakers, thermal cut-outs, impedance limiting circuits or similar means, to provide protection against excessive current being drawn in case of a fault in the equipment.
  a) Circuit breakers used as an overcurrent protective device shall meet the relevant requirements of UL Standard 489 / CSA Standard (C22.2) No. 5 / IEC 60947-2, be suitable for the application and installed near the equipment.
  b) Fuses used as an overcurrent protective device shall meet the relevant requirements of UL Standard 248 / CSA Standard (C22.2) No. 248 / IEC 60127, be suitable for the application and installed near the equipment.
– If the equipment is not used in specified manner, the protection provided by the equipment may be impaired.
– Minimum temperature rating of the cables to be connected to the field wiring terminals:
  95 °C, AWG 12
– Use copper conductors only.

8 Terminal point assignment as well as diagnostics and status indicators

Figure 2 AXL F BP SE6

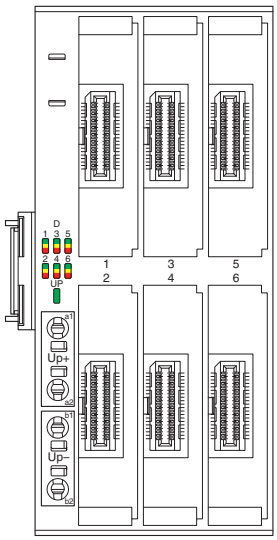

Figure 3 AXL F BP SE4

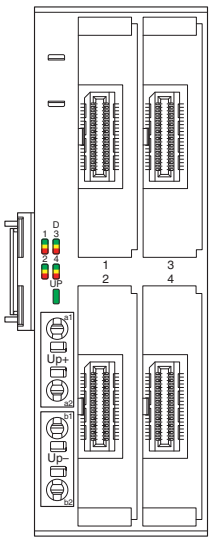

8.1 Terminal point assignment

Terminal point	Assignment	
Supply voltage input		
U_P+ (a1, a2)	24 V DC (U_P)	Feed in the I/O supply voltage for the Axioline Smart Elements (bridged internally)
U_P- (b1, b2)	GND	Reference potential of the supply voltage (bridged internally)

8.2 Local diagnostics and status indicators

Meaning in the following table:

1) The controller or bus coupler firmware does not support passive Smart Elements and empty slots.

2) The controller or bus coupler firmware supports passive Smart Elements.

A Smart Element is passive if it has no process data and no PDI objects are implemented.

Passive Smart Elements:

- AXL SE SC
- AXL SE PD 16 24V, AXL SE PD 16 GND, AXL SE PD8/8 24V/GND

To find out which controllers and bus couplers support passive Smart Elements, refer to section “Controllers, bus couplers, and slot covers”.

Designation	Color	Meaning	State	Description
D (1 ... 4/6)	Red/ yellow/ green	Diagnostics		Diagnostics for local bus communication for each backplane slot
		Run	Green on	The Smart Element is ready to operate. Communication within the station is OK. The controller is providing **valid process data**. **No malfunctions** have occurred.
		Active	Flashing green	The Smart Element is ready to operate. Communication within the station is OK. The controller is **not** providing **valid process data**. **No malfunction** has occurred on the Smart Element.
				The backplane slot is configured for a passive Smart Element.[2)]
		Device application not active	Flashing green/yellow	The Smart Element is ready to operate. Communication within the station is OK. The controller is providing **valid process data**. There is a **malfunction on the I/O side** of the Smart Element. The process output data cannot be output and/or the process input data cannot be read in.
		Ready	Yellow on	The Smart Element is ready to operate, but has still not detected a valid local bus cycle after power up.
		Connected	Flashing yellow 1 Hz	The Smart Element is not (yet) part of the active configuration.
				On power up: The Smart Element that is configured for the backplane slot **before** the slot with the flashing yellow D LED is missing from this slot or it is passive.[1)]
			Flashing yellow 8 Hz	Configuration difference
				The Smart Element has lost the connection to the backplane or has been removed.
				An unconfigured Smart Element has been plugged into the slot.
			Flashing yellow/red[1)]	During operation: The Smart Element in the backplane slot **before** the slot with the flashing yellow/red D LED has lost the connection to the backplane.

Designation	Color	Meaning	State	Description
D (1 ... 4/6)	Red/ yellow/ green	Reset	Red on	The Smart Element is ready to operate, but has lost the connection to the head of the station (bus coupler or controller).
			Red on (one LED)	The local bus has been interrupted. The flashing red D LED indicates the location of the error in the station.
			Red on (all LEDs)	On power up: There is an unconfigured Axioline F module or Smart Element in the station.
		Not connected	Red flashing	The Smart Element is ready to operate, but there is no connection to the previous Smart Element or Axioline F module.
		Power down	Off	The Smart Element is in the (power) reset state.
				The supply voltage not present.
				Energy-saving mode is active.
				The backplane slot is empty or the inserted Smart Element is passive.[1)]
UP	Green	$U_{Peripherals}$		I/O supply voltage of the Smart Elements
			On	Supply voltage U_P is present.
			Off	Supply voltage U_P is not present.

9 Connection example

Figure 4 Connection of the cables

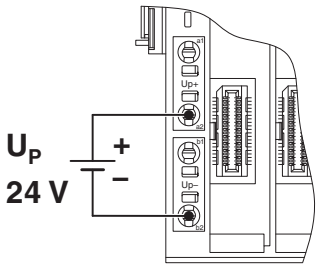

10 Slots for Axioline Smart Elements

Depending on type, the backplane has six or four “Smart Element Interface” slots for accepting Axioline Smart Elements.

Plug an Axioline Smart Element (AXL SE ...) with any function into every Smart Element Interface.

Assignment of the slots for the Axioline Smart Elements

Figure 5 AXL F BP SE6

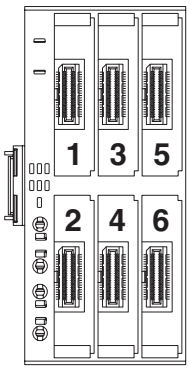

Figure 6 AXL F BP SE4

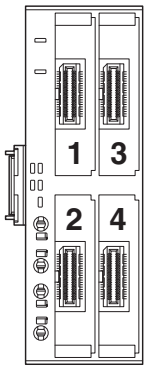

If you do not need all the slots, put a slot cover on each of the unused slots (AXL SE SC-A, Item No. 1088134 or AXL SE SC, Item No. 1167159).

Only then is the complete Axioline F station capable of running.

If you are using an engineering system and an AXL SE SC-A or AXL SE SC slot cover, configure the Smart Element accordingly.

11 Controllers, bus couplers, and slot covers

Note the special characteristics of individual controllers and bus couplers when using slot covers.

11.1 AXL SE SC, AXL SE PD ...

The following controllers and bus couplers support the passive AXL SE SC and AXL SE PD ... Smart Elements from the specified firmware version:

Type	Firmware version
Controllers	
AXC 1050	≥ 5.0
AXC 3050	≥ 6.3
AXC F 1152	≥ 2020.0
AXC F 2152	≥ 2020.0
AXC F 3152	≥ 2020.3
Bus coupler	
AXL F BK PN TPS (XC)	≥ 1.30
AXL F BK ETH (XC)	≥ 1.30
AXL F BK EIP	≥ 1.30
AXL F BK EIP EF	≥ 1.30
AXL F BK EC	≥ 1.30
AXL F BK S3	≥ 1.35
AXL F BK PB (XC)	≥ 2.20

Controllers and bus couplers not listed in the table do not support the passive Smart Elements.

If you need a slot cover, in this case use the AXL SE SC-A slot cover or a different Smart Element, such as the AXL SE DI16/1.

11.2 AXL SE SC-A

Note when using bus couplers for PROFIBUS DP with the hardware and software (HW/SW) firmware version it runs:

AXL F BK PB: HW/FW ≤ 05/2.13
AXL F BK PB XC: HW/FW ≤ 00/2.13

The bus coupler does not support AXL SE SC-A slot covers.

Use another Smart element to cover the unused slots, such as AXL SE DI16/1.

AXL SE DI16/1

Axioline Smart Elements, digital input module, digital inputs: 16, 24 V DC, connection technology: 1-conductor

Data sheet
108699_en_04

 2023-10-23

1 Description

You can integrate Axioline Smart Elements into systems with the Smart Element interface.
This Smart Element detects digital signals.

Features

- 16 digital inputs in accordance with EN 61131-2 type 1 and type 3
- Nominal voltage: 24 V DC
- Nominal current: 2.4 mA
- Connection of sensors in 1-conductor technology
- Filter time of < 1 ms
- Device rating plate stored

This data sheet is only valid in association with the UM EN AXL SE SYS INST user manual.

Make sure you always use the latest documentation.
It can be downloaded at: phoenixcontact.com/product/1088127

2 Table of contents

3 Ordering data

Description	Type	Item no.	Pcs./Pkt.
Axioline Smart Elements, Digital input module, Digital inputs: 16, 24 V DC, connection technology: 1-conductor, degree of protection: IP20	AXL SE DI16/1	1088127	1

Documentation	Type	Item no.	Pcs./Pkt.
User manual, English, Axioline Smart Elements	UM EN AXL SE SYS INST	-	-
User manual, English, Axioline F: System and installation	UM EN AXL F SYS INST	-	-
User manual, English, Axioline F: Diagnostic registers, and error messages	UM EN AXL F SYS DIAG	-	-

Additional ordering data	
For additional ordering data (accessories), go to:	www.phoenixcontact.com/product/1088127

4 Technical data

Dimensions (nominal sizes in mm)

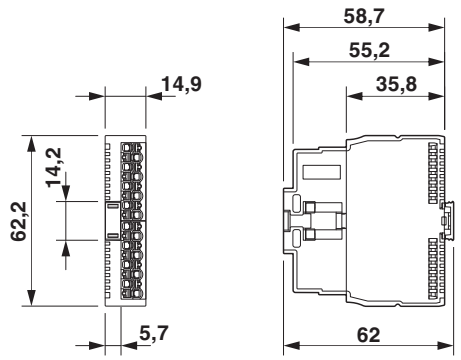

Width	14.9 mm
Height	62.2 mm
Depth	62 mm

General data	
Color	Housing: traffic grey A (RAL 7042)
Weight	35 g
Ambient temperature (operation)	-25 °C ... 60 °C
Ambient temperature (storage/transport)	-40 °C ... 85 °C
Permissible humidity (operation)	5 % ... 95 % (non-condensing)
Permissible humidity (storage/transport)	5 % ... 95 % (non-condensing)
Air pressure (operation)	70 kPa ... 106 kPa (up to 3000 m above sea level)
Air pressure (storage/transport)	70 kPa ... 106 kPa (up to 3000 m above sea level)

General data	
Degree of protection	IP20
Protection class	III (IEC 61140, EN 61140, VDE 0140-1)
Overvoltage category	II (IEC 60664-1, EN 60664-1)
Degree of pollution	2 (IEC 60664-1, EN 60664-1)
Mounting type	Smart Element slot
Mounting position	See the system in which the Smart Element is used.

Do not use the Smart Element in an atmosphere that contains corrosive gas.

Connection data: I/O	
Connection method	Push-in connection
Conductor cross section, rigid	0.25 mm^2 ... 1.5 mm^2
Conductor cross section, flexible	0.25 mm^2 ... 1.5 mm^2
Conductor cross section [AWG]	24 ... 16
Conductor cross section flexible, with ferrule with plastic sleeve	0.25 mm^2 ... 1.5 mm^2
Conductor cross section flexible, with ferrule without plastic sleeve	0.25 mm^2 ... 1.5 mm^2
Stripping length	8 mm

Please observe the information provided on conductor cross sections in the “Axioline Smart Elements” user manual.

Interface: Smart Element interface	
Number of interfaces	1
Connection method	Card edge connector
Start time until ready to operate	< 500 ms

Communications power supply of the Smart Elements (U_{SE})	
Supply voltage	using card edge connectors
Current draw	See documentation for the system in which the Smart Element is used.

I/O supply (U_P)	
Nominal supply voltage	24 V DC (using card edge connectors)
Supply voltage range	19.2 V DC ... 30 V DC (including all tolerances, including ripple)
Current consumption	min. 14 mA (without connected peripherals) max. 17 mA
Power consumption	min. 340 mW max. 0.5 W
Surge protection	See the system in which the Smart Element is used.
Reverse polarity protection	Polarity protection diode
Protection	See the system in which the Smart Element is used.

Digital inputs	
Number of inputs	16
Connection method	Push-in connection
Connection technology	1-conductor
Description of the input	EN 61131-2 types 1 and 3
Nominal input voltage	24 V DC
Nominal input current	2.4 mA
Current flow	linear until nominal current is reached, then constantly approx. 2.4 mA
Input voltage range "0" signal	-3 V DC ... 5 V DC
Input voltage range "1" signal	11 V DC ... 30 V DC
Input filter time	< 1 ms
Process data update	typ. 340 µs
Polarity reversal protection of the inputs	Diode

Input and output address area	
Input address area	2 Byte
Output address area	0 Byte

Configuration and parameter data in a PROFIBUS system	
Required parameter data	1 Byte
Required configuration data	6 Byte

Electrical isolation/isolation of the voltage areas	
Test section	**Test voltage**
Communications supply / 24 V supply (I/O)	500 V AC, 50 Hz, 1 min.
Communications supply / functional ground	500 V AC, 50 Hz, 1 min.
24 V supply (I/O) / functional ground	500 V AC, 50 Hz, 1 min.

Mechanical tests	
Vibration resistance in accordance with EN 60068-2-6/IEC 60068-2-6	5g
Shock in accordance with EN 60068-2-27/IEC 60068-2-27	30g
Continuous shock in accordance with EN 60068-2-27/IEC 60068-2-27	10g

Conformance with EMC Directive 2014/30/EU	
Immunity test in accordance with EN 61000-6-2/IEC 61000-6-2	
Electrostatic discharge (ESD) EN 61000-4-2/IEC 61000-4-2	Criterion B, 6 kV contact discharge, 8 kV air discharge
Electromagnetic fields EN 61000-4-3/IEC 61000-4-3	Criterion A, Field intensity: 10 V/m
Fast transients (burst) EN 61000-4-4/IEC 61000-4-4	Criterion B, 2 kV
Transient overvoltage (surge) EN 61000-4-5/IEC 61000-4-5	Criterion B, I/O cables: ±1 kV asymmetrical
Conducted interference EN 61000-4-6/IEC 61000-4-6	Criterion A, Test voltage 10 V
Noise emission test in accordance with EN 61000-6-4/IEC 61000-6-4	Class A

Approvals	
For the current approvals, go to:	www.phoenixcontact.com/product/1088127

Manufacturer's declarations	
For the current manufacturer’s declarations, go to:	www.phoenixcontact.com/product/1088127

5 Internal circuit diagram

Figure 1 Internal wiring of the terminal points

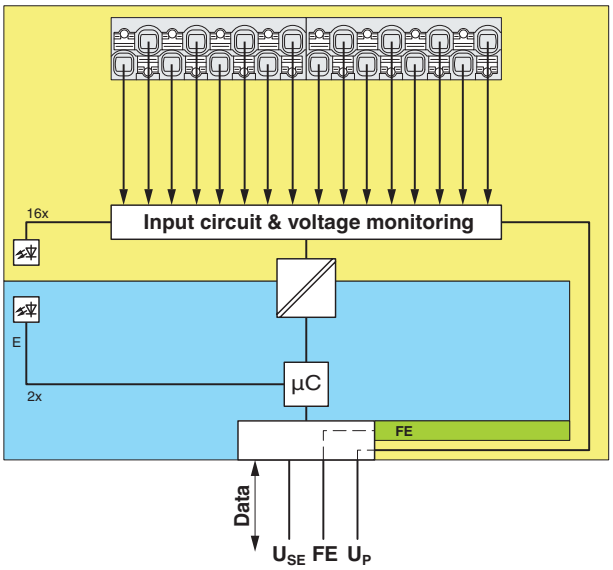

Key:

Data	Data transmission
U_{SE}	Communications power supply of the Smart Element
FE	Functional ground
U_P	I/O supply of the Smart Element
µC	Microcontroller
	Electrical isolation for data or power supply
	LED
Input circuit ...	Input circuit and voltage monitoring
	Electrically isolated areas

6 For your safety

6.1 Intended use

Use Smart Elements exclusively in accordance with the specifications in the data sheet and the “Axioline Smart Elements” user manual.
Please also refer to the documentation for the system in which the Smart Elements are used.

If the equipment is used in a manner not specified, the protection provided by the equipment may be impaired.

6.2 Qualification of users

The use of products described in this data sheet is oriented exclusively to electrically skilled persons or persons instructed by them. The users must be familiar with the relevant safety concepts of automation technology as well as applicable standards and other regulations.

6.3 Installation

CAUTION: Fire hazard

- The device must be installed in the final protective housing, which provides sufficient resistance to mechanical strain and protection against the spreading of fire in accordance with the standards UL/IEC/EN 61010-1 and UL/IEC/EN 61010-2-201.
- The external circuits intended to be connected to this device must be galvanically separated from mains supply or hazardous live voltage by reinforced or double insulation and meet the requirements of SELV/PELV (Class III) circuits in accordance with UL/CSA/IEC/EN 61010-1, UL/CSA/IEC/EN 61010-2-201.

6.4 Disconnecting or plugging in a Smart Element

NOTE: Damage to contacts or malfunction

Before performing work on a Smart Element, disconnect the power to the Smart Element.

This means:

- Disconnect the connected I/O devices from the power.
- Switch off the I/O supply voltage U_P!
- Switch off the communications power U_{SE}. For the system in which the Smart Element is used, this means the following: Switch off the voltage that generates the U_{SE}.

6.5 Strain relief

NOTE: damage to the contacts

Physical overloads can result in damage to the terminal points.

- Relieve strain in the connected cables.

6.6 Locking a Smart Element

Make sure that each Smart Element is locked in its slot. This is only ensured if the unlocking mechanism has been pushed into the guide as far as it will go.

See “Axioline Smart Elements” user manual.

6.7 Using round cables CABLE-FLK14/AXIO/OE/0,14/...

For this Smart Element, the use of assembled round cables CABLE-FLK14/AXIO/OE/0,14/... is permitted. The conductors of these cables are fitted with ferrules and have a conductor cross-section of 0.14 mm^2, AWG 26.

UL approval not required

For applications with UL approvals, the AWG 24-16 conductor cross-section is certified.

Due to the smaller conductor cross-section of AWG 26, **UL approval** is **not** required when using the Smart Element in combination with a round cable.

6.8 Applications with UL approval

Information:

To install the device in accordance with UL/CSA/IEC standard, the following notes must be observed.

– Minimum temperature rating of the cables to be connected to the field wiring terminals:
  105 °C, AWG 24 ... 16
– Use copper conductors only.

7 Terminal point assignment as well as diagnostics and status indicators

Figure 2 Terminal point assignment as well as diagnostics and status indicators

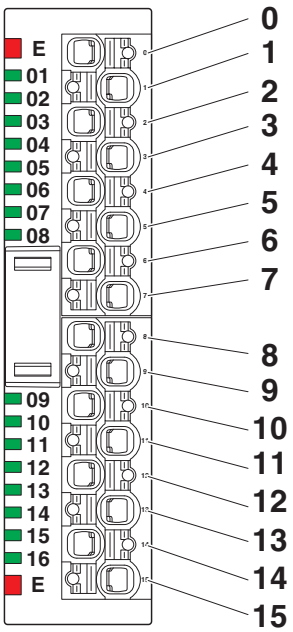

7.1 Terminal point assignment

Terminal point	Assignment	Channel	Signal
0	Digital input	1	IN01
...	...	...	...
15	Digital input	16	IN16

7.2 Local diagnostics and status indicators

Designation	Color	Description	
E	Red	Error	
		Off	No error
		Flashing (0.5 Hz)	Error in Smart Element Replace the Smart Element.
		Flashing (4 Hz)	Communication error Check whether the Smart Element has been plugged in correctly.
		On	I/O error Check the connected components and wiring. Remove the error.
01 ... 16	Yellow	Status of the input	
		On	Input is set.
		Off	Input is not set.

See also “Diagnostic state (0018_{hex}: DiagState)” section, “Possible error codes” table.

8 Connection examples

Ensure that GND of the sensors and actuators and GND for the I/O supply voltage U_P have the same potential.

8.1 Using equipotential busbars

Figure 3 Connection in 1-conductor technology

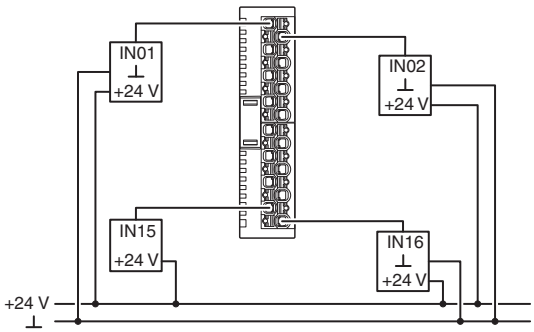

8.2 Using AXL SE PD ...

Figure 4 Connection in 3-conductor technology

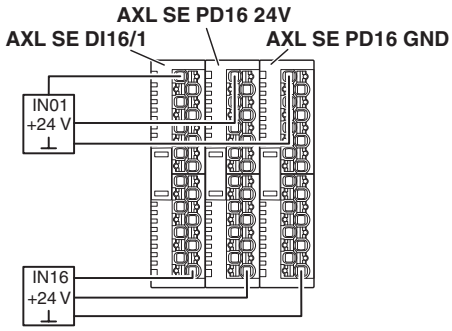

To implement the connections of this Smart Element in multi-conductor technology on Smart Elements, you can use the following Smart Elements for potential distribution:

Item No.	Type	Features
1337223	AXL SE PD16 24V	16 x 24 V (U_P)
		2 fuses, 2 A each
1337224	AXL SE PD16 GND	16 x GND (U_P)
1337225	AXL SE PD8/8 24V/ GND	8 x 24 V (U_P)
		8 x GND (U_P)
		1 fuse, 4 A

Detailed information on the Smart Elements for potential distribution can be found in the associated data sheets. There you will also find instructions for use and examples.

9 Process data

The process data is mapped in Motorola format (Big Endian).

Byte	0							
Bit	7	6	5	4	3	2	1	0
Signal	IN08	IN07	IN06	IN05	IN04	IN03	IN02	IN01
Terminal point	07	06	05	04	03	02	01	00

Byte	1							
Bit	7	6	5	4	3	2	1	0
Signal	IN16	IN15	IN14	IN13	IN12	IN11	IN10	IN09
Terminal point	15	14	13	12	11	10	9	8

10 Parameter, diagnostics and information (PDI)

Parameter and diagnostic data as well as other information are transmitted as objects via the PDI channel.

For more detailed information on all possible standard objects for Axioline Smart Elements, please refer to the UM EN AXL SE SYS INST user manual.

The standard objects necessary for operation are described in the following section.

The following applies for the tables below:

Abbreviation	Meaning
Length in bytes	Maximum length of the elements in bytes
R	Read
W	Write
[x]	Number of elements in an array or record

11 Standard objects

Index (hex)	Object name	Data type	Length in bytes	Rights	Meaning/contents		Startup parameters	
Device type								
0037	DeviceType	Octet string	8	R	Device type	0080 0002 0000 $1D18_{hex}$	No	
Diagnostics objects								
0018	DiagState	Record [11]	74	R	Diagnostic state		No	*
0019	ResetDiag	UINT8	1	R/W	Handling diagnostic messages		No	*
Objects for process data management								
0025	PDIN	Octet string	2	R	Input process data The structure corresponds to the representation in the "Process data" section.		No	
0026	PDOUT	Octet string	2	R	Output process data is not available		No	

Startup parameters are stored permanently in the Flash memory.

The objects identified with * in the last column are described in more detail in the following sections.

The description of the other objects is to be found in the user manual UM EN AXL F SYS INST.

11.1 Diagnostics state (0018_{hex}: DiagState)

This object is used for a structured message of an error.

Read off all information via subindex 00 to receive all information on an error number. Access to individual elements of the object is not permitted.

A detailed description of the object is provided in user manual UM EN AXL F SYS INST.

Possible error codes

Element	02	03	04	08	0B		
Error	Priority	Channel	Error code	Function group	Text	E LED	Corrective
	hex	hex	hex				
No error	00	00	0000	General	Status OK	○	
I/O supply voltage (U_P) is not present.	01	FF	3130	General	Supply missing (U_P)	●	Check the supply voltage.
Error in the Smart Element firmware	01	FF	6100	General	Firmware error, update required	●	Replace the Smart Element.
Problem communicating with the Smart Element	01	FF	6130	General	Smart Element missing	✹	Check whether the Smart Element has been plugged in correctly. If the error is still present, replace the Smart Element.
Error in the parameter memory	01	FF	6320	General	Parameter error, repeat parameterization	●	Error in the parameter memory. Parameterize the Smart Element.

Key

Priority	00_{hex}	No error
	01_{hex}	Error
Channel	00_{hex}	No error
	FF_{hex}	Entire device

LED	○	Off
	●	On
	✹	Flashing (4 Hz)

11.2 Handling diagnostic messages (0019_{hex}: ResetDiag)

You can use this object to specify how the Smart Element should handle diagnostic messages.

Handling diagnostic messages	
Value (hex)	Meaning
00	Permit all diagnostic messages
02	Delete and acknowledge all diagnostic messages that are still pending
06	Delete and acknowledge all diagnostic messages and do not permit new diagnostic messages
Other	Reserved

12 Device descriptions

The device is described in the device description files.
The device descriptions for controllers from Phoenix Contact are included in PC Worx and PLCnext Engineer, as well as in the corresponding service packs.
The device description files for other systems are available for download at www.phoenixcontact.com/products in the download area of the bus coupler installed.

AXL SE DO16/1

Axioline Smart Elements, digital output module, digital outputs: 16, 24 V DC, 500 mA, connection technology: 1-conductor

Data sheet
108700_en_04

 2023-03-28

1 Description

You can integrate Axioline Smart Elements into systems with the Smart Element interface.
This Smart Element emits digital signals.

Features

- 16 digital outputs
- 24 V DC, 500 mA
- Connection of actuators in 1-conductor technology
- Substitute value behavior of the outputs can be parameterized for the Smart Element
- Device rating plate stored

This data sheet is only valid in association with the UM EN AXL SE SYS INST user manual.

Make sure you always use the latest documentation.
It can be downloaded at: phoenixcontact.net/product/1088129

2 Table of contents

3 Ordering data

Description	Type	Item no.	Pcs./Pkt.
Axioline Smart Elements, Digital output module, Digital outputs: 16, 24 V DC, 500 mA, connection technology: 1-conductor, degree of protection: IP20	AXL SE DO16/1	1088129	1

Documentation	Type	Item no.	Pcs./Pkt.
User manual, English, Axioline Smart Elements	UM EN AXL SE SYS INST	-	-
User manual, English, Axioline F: System and installation	UM EN AXL F SYS INST	-	-
User manual, English, Axioline F: Diagnostic registers, and error messages	UM EN AXL F SYS DIAG	-	-

Additional ordering data	
For additional ordering data (accessories), go to:	www.phoenixcontact.net/product/1088129

4 Technical data

Dimensions (nominal sizes in mm)

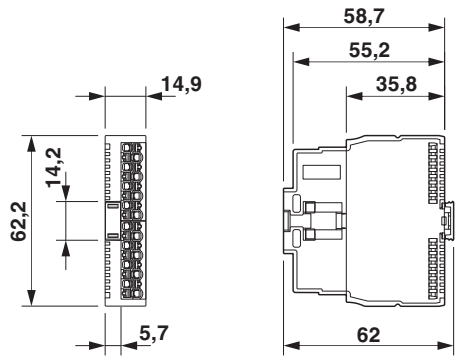

Width	14.9 mm
Height	62.2 mm
Depth	62 mm

General data	
Color	traffic grey A RAL 7042
Weight	37 g
Ambient temperature (operation)	-25 °C ... 60 °C
Ambient temperature (storage/transport)	-40 °C ... 85 °C
Permissible humidity (operation)	5 % ... 95 % (non-condensing)
Permissible humidity (storage/transport)	5 % ... 95 % (non-condensing)
Air pressure (operation)	70 kPa ... 106 kPa (up to 3000 m above sea level)
Air pressure (storage/transport)	70 kPa ... 106 kPa (up to 3000 m above sea level)

General data	
Degree of protection	IP20
Protection class	III (IEC 61140, EN 61140, VDE 0140-1)
Overvoltage category	II (IEC 60664-1, EN 60664-1)
Degree of pollution	2 (IEC 60664-1, EN 60664-1)
Mounting type	Smart Element slot
Mounting position	See the system in which the Smart Element is used.

Do not use the Smart Element in an atmosphere that contains corrosive gas.

Connection data: I/O	
Connection method	Push-in connection
Conductor cross section, rigid	0.25 mm^2 ... 1.5 mm^2
Conductor cross section, flexible	0.25 mm^2 ... 1.5 mm^2
Conductor cross section [AWG]	24 ... 16
Conductor cross section flexible, with ferrule with plastic sleeve	0.25 mm^2 ... 1.5 mm^2
Conductor cross section flexible, with ferrule without plastic sleeve	0.25 mm^2 ... 1.5 mm^2
Stripping length	8 mm

Please observe the information provided on conductor cross sections in the “Axioline Smart Elements” user manual.

With a small conductor cross section and high current, the terminal point temperature can reach up to 45 K above the ambient temperature.

When selecting the cables, observe the permissible operating temperature in accordance with IEC or UL.

Interface: Smart Element interface	
Number of interfaces	1
Connection method	Card edge connector
Start time until ready to operate	< 500 ms

Communications power supply of the Smart Elements (U_{SE})	
Supply voltage	using card edge connectors
Current draw	See documentation for the system in which the Smart Element is used.

I/O supply (U_P)	
Nominal supply voltage	24 V DC (using card edge connectors)
Supply voltage range	19.2 V DC ... 30 V DC (including all tolerances, including ripple)
Current consumption	min. 40 mA (without connected peripherals) max. 6 A
Power consumption	min. 288 mW max. 180 W (of which 1.1 W internal losses)
Surge protection	See the system in which the Smart Element is used.
Reverse polarity protection	parallel diode

I/O supply (U_P)	
Protection	See the system in which the Smart Element is used.

NOTE: Damage to the electronics

To ensure reverse polarity protection, provide external protection for the Smart Element in the system that you are using it in. If you use a fuse, the power supply unit must be capable of supplying four times the nominal current of the fuse. This ensures that the fuse trips reliably in the event of a fault.

When starting up the Smart Element for the first time in the system that you have installed it, protect the system with a 5 A fuse. When all Smart Elements in the system are correctly connected, the 5 A fuse can be replaced with a fuse as specified for the system that you have installed the Smart Element in.

After that, you can load the Smart Element by up to 6 A. Loads over 6 A are not permitted.

Digital outputs	
Number of outputs	16
Connection method	Push-in connection
Connection technology	1-conductor
Nominal output voltage	24 V DC
Output current per channel	max. 500 mA
Output current of the device	6 A (Also make sure that the maximum permissible current of 6 A is not exceeded.)
Nominal load, ohmic	12 W (48 Ω, with nominal voltage)
Nominal load, inductive	12 VA (1.2 H, 48 Ω, with nominal voltage)
Nominal load, lamp	12 W (at nominal voltage)
Load min.	10 kΩ
Energy consumption	see diagram
Limitation of the voltage induced on circuit interruption	-32.8 V DC ... -15 V DC
Output voltage when switched off	max. 1 V
Output current when switched off	max. 300 µA
Signal delay	max. 100 µs (when switched on) max. 100 µs (when switched off, with at least 50 mA load current)
Switching frequency	max. 1200 per second (With resistive load, at least 50 mA load current) max. 1 per second (with inductive load) max. 16 per second (with nominal lamp load)

The specified switching frequency is limited by the device hardware. The switching frequency that can actually be achieved depends on the update time of the overall system, including the cycle times of the controller, network, etc.

Short-circuit and overload protection	electronic
Behavior with overload	Shutdown with automatic restart
Behavior with inductive overload	Output can be destroyed
Reverse voltage resistance to short pulses	limited protection up to 0.5 A for 1 s

NOTE: Damage to the electronics

In the event of an incorrectly applied external voltage (reverse voltage) at one of the outputs, the channel that has been exposed to the reverse voltage can be destroyed and further outputs may unintentionally be set.

Digital outputs	
Overcurrent shut-down	min. 0.7 A
Output current with ground connection interrupt when switched off	< 1 mA
Process data update	typ. 370 µs

Input and output address area	
Input address area	0 Byte
Output address area	2 Byte

Configuration and parameter data in a PROFIBUS system	
Required parameter data	9 Byte
Required configuration data	6 Byte

Electrical isolation/isolation of the voltage areas	
Test section	**Test voltage**
Communications supply / 24 V supply (I/O)	500 V AC, 50 Hz, 1 min.
Communications supply / functional ground	500 V AC, 50 Hz, 1 min.
24 V supply (I/O) / functional ground	500 V AC, 50 Hz, 1 min.

Mechanical tests	
Vibration resistance in accordance with EN 60068-2-6/IEC 60068-2-6	5g
Shock in accordance with EN 60068-2-27/IEC 60068-2-27	30g
Continuous shock in accordance with EN 60068-2-27/IEC 60068-2-27	10g

Conformance with EMC Directive 2014/30/EU	
Immunity test in accordance with EN 61000-6-2/IEC 61000-6-2	
Electrostatic discharge (ESD) EN 61000-4-2/IEC 61000-4-2	Criterion B, 6 kV contact discharge, 8 kV air discharge
Electromagnetic fields EN 61000-4-3/IEC 61000-4-3	Criterion A, Field intensity: 10 V/m
Fast transients (burst) EN 61000-4-4/IEC 61000-4-4	Criterion B, 2 kV
Transient overvoltage (surge) EN 61000-4-5/IEC 61000-4-5	Criterion B, I/O cables: ±1 kV asymmetrical
Conducted interference EN 61000-4-6/IEC 61000-4-6	Criterion A, Test voltage 10 V
Noise emission test in accordance with EN 61000-6-4/IEC 61000-6-4	Class A

Approvals	
For the current approvals, go to:	www.phoenixcontact.net/product/1088129

Manufacturer's declarations	
For the current manufacturer’s declarations, go to:	www.phoenixcontact.net/product/1088129

5 Maximum outputs power consumption when inductive loads are switched off

NOTE: Damage to the electronics

When you use an external freewheel limit, the free-wheeling voltage to a maximum of -15 V.

The value **must** be above -15 V, so -12 V, for example.

The external freewheel limit has no function with a higher negative voltage.

Figure 1 Maximum outputs power consumption when inductive loads are switched off

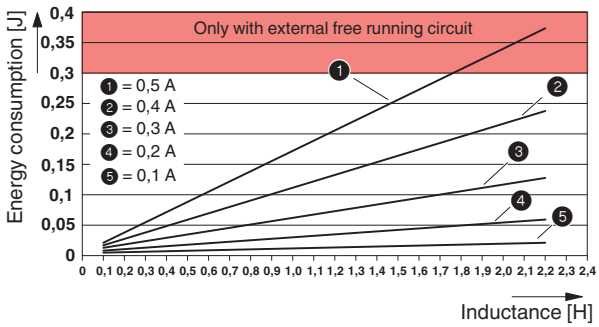

The specifications in the diagram refer to a maximum switching frequency of 1 Hz.

The diagram shows the maximum amount of energy that may be fed back into the corresponding output groups (outputs 1 to 8, 9 to 16) for each switch-off procedure when switching off an inductive load without external freewheeling circuit.

The current data refers to the ohmic DC voltage component of the inductive load.

6 Internal circuit diagram

Figure 2 Internal wiring of the terminal points

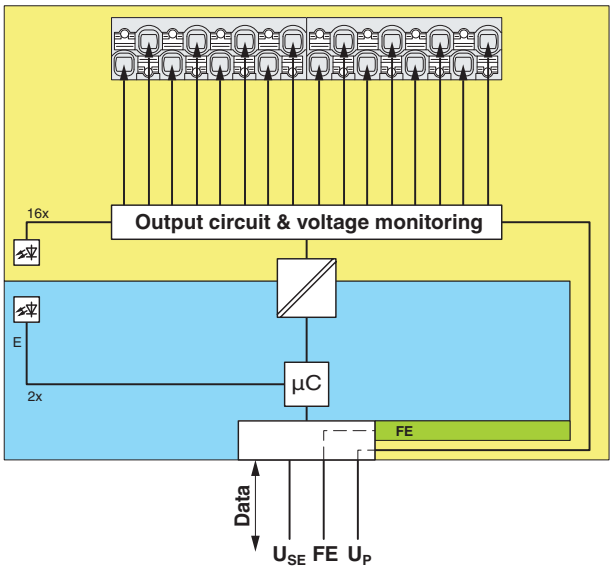

Key:

Data	Data transmission
U_{SE}	Communications power supply of the Smart Element
FE	Functional ground
U_P	I/O supply of the Smart Element
µC	Microcontroller
	Electrical isolation for data or power supply
	LED
Output circuit ...	Output circuit and voltage monitoring
	Electrically isolated areas

7 For your safety

7.1 Intended use

Use Smart Elements exclusively in accordance with the specifications in the data sheet and the “Axioline Smart Elements” user manual.
Please also refer to the documentation for the system in which the Smart Elements are used.

If the equipment is used in a manner not specified, the protection provided by the equipment may be impaired.

7.2 Qualification of users

The use of products described in this data sheet is oriented exclusively to electrically skilled persons or persons instructed by them. The users must be familiar with the relevant safety concepts of automation technology as well as applicable standards and other regulations.

7.3 Electrical safety

WARNING: loss of electrical safety

The external circuits intended to be connected to this device shall be galvanically separated from the mains supply or hazardous live voltage by reinforced or double insulation and meet the requirements of SELV/PELV (Class III) circuits of UL/CSA/IEC/EN 61010-1, UL/CSA/IEC/ EN 61010-2-201.

7.4 Disconnecting or plugging in a Smart Element

NOTE: Damage to contacts or malfunction

Before performing work on a Smart Element, disconnect the power to the Smart Element.

This means:

- Disconnect the connected I/O devices from the power.
- Switch off the I/O supply voltage U_P!
- Switch off the communications power U_{SE}. For the system in which the Smart Element is used, this means the following: Switch off the voltage that generates the U_{SE}.

7.5 Strain relief

NOTE: damage to the contacts

Physical overloads can result in damage to the terminal points.

- Relieve strain in the connected cables.

7.6 Locking a Smart Element

Make sure that each Smart Element is locked in its slot. This is only ensured if the unlocking mechanism has been pushed into the guide as far as it will go.

See “Axioline Smart Elements” user manual.

7.7 Using round cables CABLE-FLK14/AXIO/OE/0,14/...

For this Smart Element, the use of assembled round cables CABLE-FLK14/AXIO/OE/0,14/... is permitted. The conductors of these cables are fitted with ferrules and have a conductor cross-section of 0.14 mm², AWG 26.

UL approval not required

For applications with UL approvals, the AWG 24-16 conductor cross-section is certified.

Due to the smaller conductor cross-section of AWG 26, **UL approval** is **not** required when using the Smart Element in combination with a round cable.

7.8 Applications with UL approval

CAUTION: Fire hazard

The device has to be installed in the final safety enclosure, which has adequate rigidity according to UL 61010-1, UL 61010-2-201 and meets the requirements with respect to spread of fire.

Information:

To install the device in accordance with UL/CSA/ IEC standard, the following notes must be observed.

– Minimum temperature rating of the cables to be connected to the field wiring terminals:
  105 °C, AWG 24 ... 16
– Use copper conductors only.

8 Terminal point assignment as well as diagnostics and status indicators

Figure 3 Terminal point assignment as well as diagnostics and status indicators

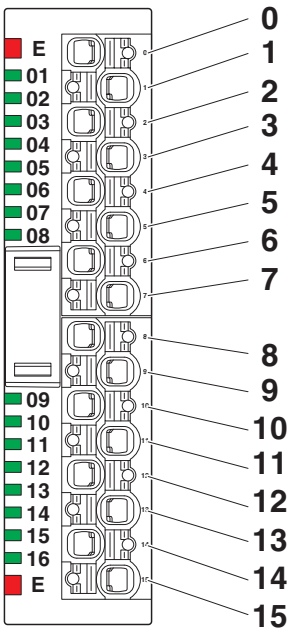

8.1 Terminal point assignment

Terminal point	Assignment	Channel	Signal
0	Digital output	1	OUT01
...	...	...	...
15	Digital output	16	OUT16

8.2 Local diagnostics and status indicators

Designation	Color	Description	
E	Red	Error	
		Off	No error
		Flashing (0.5 Hz)	Error in Smart Element Replace the Smart Element.
		Flashing (4 Hz)	Communication error Check whether the Smart Element has been plugged in correctly.
		On	I/O error Check the connected components and wiring. Remove the error.
01 ... 16	Yellow	Output status	
		On	Output is set.
		Off	Output is not set.

See also “Diagnostic state (0018_{hex}: DiagState)” section, “Possible error codes” table.

9 Connection examples

Make sure that the GND of the actuators and the GND for U_P have the same potential!

9.1 Using equipotential busbars

Figure 4 Connection in 1-conductor technology

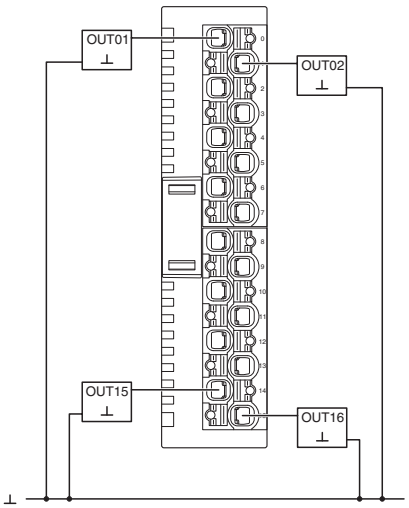

9.2 Using AXL SE PD ...

Figure 5 Connection in 2-conductor technology

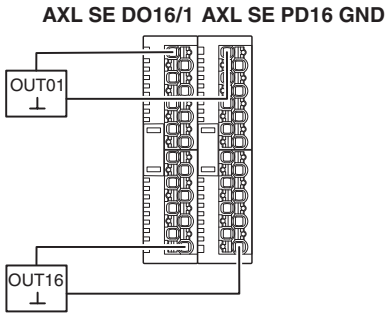

To implement the connections of this Smart Element in multi-conductor technology on Smart Elements, you can use the following Smart Elements for potential distribution:

Item No.	Type	Features
1337224	AXL SE PD16 GND	16 x GND (U_P)
1337225	AXL SE PD8/8 24V/ GND	8 x 24 V (U_P)
		8 x GND (U_P)
		1 fuse, 4 A

Detailed information on the Smart Elements for potential distribution can be found in the associated data sheets. There you will also find instructions for use and examples.

10 Process data

The process data is mapped in Motorola format (Big Endian).

Byte	0							
Bit	7	6	5	4	3	2	1	0
Signal	OUT 08	OUT 07	OUT 06	OUT 05	OUT 04	OUT 03	OUT 02	OUT 01
Terminal point	07	06	05	04	03	02	01	00

Byte	1							
Bit	7	6	5	4	3	2	1	0
Signal	OUT 16	OUT 15	OUT 14	OUT 13	OUT 12	OUT 11	OUT 10	OUT 09
Terminal point	15	14	13	12	11	10	9	8

11 Parameter, diagnostics and information (PDI)

Parameter and diagnostic data as well as other information are transmitted as objects via the PDI channel.

For more detailed information on all possible standard objects for Axioline Smart Elements, please refer to the UM EN AXL SE SYS INST user manual.

The standard objects necessary for operation are described in the following section.

The following applies for the tables below:

Abbreviation	Meaning
A	Number of elements
L	Length of the elements in bytes
R	Read
W	Write

12 Standard objects

Index (hex)	Object name	Data type	A	L	Rights	Meaning/contents		Startup parameters	
Device type									
0037	DeviceType	Octet string	1	8	R	Device type	0040 0002 0000 $1D19_{hex}$	No	
Diagnostics objects									
0018	DiagState	Record	11	74	R	Diagnostic state		No	*
0019	ResetDiag	UINT8	1	1	R/W	Handling diagnostic messages		No	*
Objects for process data management									
0024	ResetCode	UINT16	1	2	R/W	Substitute value behavior during bus reset (PDOUT)		Yes	*
0025	PDIN	Octet string	1	2	R	Input process data is not available.		No	
0026	PDOUT	Octet string	1	2	R	OUT process data The structure corresponds to the representation in the “Process data” section.		No	
Objects for device management									
002D	ResetParam	UINT8	1	1	R/W	Reset parameterization		No	*

Startup parameters are stored permanently in the Flash memory.

The objects identified with * in the last column are described in more detail in the following sections.

The description of the other objects is to be found in the user manual UM EN AXL F SYS INST.

12.1 Diagnostics state (0018_{hex}: DiagState)

This object is used for a structured message of an error.

A detailed description of the object is provided in user manual UM EN AXL F SYS INST.

Possible error codes

Subindex	02	03	04	08	0B		
Error	Priority	Channel	Error code	Function group	Text	E LED	Corrective
	hex	hex	hex				
No error	00	00	0000	General	Status OK	○	
Overload or short circuit of an output	01	FF	2344	DO	Overload or short circuit (output)	●	Check the connected components and wiring.
I/O supply voltage (U_P) is not present.	01	FF	3130	General	Supply missing (U_P)	●	Check the supply voltage.
Error in the Smart Element firmware	01	FF	6100	General	Firmware error, update required	●	Replace the Smart Element.
Problem communicating with the Smart Element	01	FF	6130	General	Smart Element missing	✹	Check whether the Smart Element has been plugged in correctly. If the error is still present, replace the Smart Element.
Error in the parameter memory	01	FF	6320	General	Parameter error, repeat parameterization	●	Error in the parameter memory. Parameterize the Smart Element.

Key

Priority	00_{hex}	No error
	01_{hex}	Error
Channel	00_{hex}	No error
	FF_{hex}	Entire device

LED	○	Off
	●	On
	✹	Flashing (4 Hz)

12.2 Handling diagnostic messages (0019_{hex}: ResetDiag)

You can use this object to specify how the Smart Element should handle diagnostic messages.

Handling diagnostic messages	
Value (hex)	Meaning
00	Permit all diagnostic messages
02	Delete and acknowledge all diagnostic messages that are still pending
06	Delete and acknowledge all diagnostic messages and do not permit new diagnostic messages
Other	Reserved

12.3 Substitute value behavior during bus reset (PDOUT) (0024_{hex}: ResetCode)

Use this object to parameterize the behavior of the Smart Element outputs in the event that process data is missing.

0024_{hex}: substitute value behavior during bus reset (PDOUT) (read, write)			
Subindex (hex)	**Data type**	**Length in bytes**	**Meaning/contents**
00	UINT16	2	Read or write entire object.
			Substitute value behavior of the outputs

Value range	
Value (hex)	**Meaning**
0000	**0 is output to all output bits (default)**
0001	1 is output to all output bits
0002	Hold last value
Other	Reserved

12.4 Reset parameterization ($002D_{hex}$: ResetParam)

Use this object to reset certain parameters to the factory default settings (default values).

To reset the parameters, value 01_{hex} must be transferred during write access.

Reset the following parameters using this object:

Index (hex)	Object name	Meaning
0024	ResetCode	Substitute value behavior during bus reset (PDOUT)

13 Device descriptions

The device is described in the device description files.
The device descriptions for controllers from Phoenix Contact are included in PC Worx and PLCnext Engineer, as well as in the corresponding service packs.
The device description files for other systems are available for download at www.phoenixcontact.net/products in the download area of the bus coupler installed.

AXL SE AI4 I 4-20

Axioline Smart Elements, analog input module, analog inputs: 4, 4 mA ... 20 mA, connection technology: 2-conductor

Data sheet
108694_en_05

 2024-03-05

1 Description

You can integrate Axioline Smart Elements into systems with the Smart Element interface.
This Smart Element detects analog current signals.

Features

- 4 analog input channels
- Connection of sensors in 2-conductor technology
- Current range: 4 mA ... 20 mA
- Data format: standardized representation
- Resolution: 12 bits
- Wire-break detection
- Device rating plate stored

This data sheet is only valid in association with the UM EN AXL SE SYS INST user manual.

Make sure you always use the latest documentation.
It can be downloaded at: phoenixcontact.com/product/1088062

2 Table of contents

3 Ordering data

Description	Type	Item no.	Pcs./Pkt.
Axioline Smart Elements, Analog input module, Analog inputs: 4, 4 mA ... 20 mA, connection technology: 2-conductor, degree of protection: IP20	AXL SE AI4 I 4-20	1088062	1

Documentation	Type	Item no.	Pcs./Pkt.
User manual, English, Axioline Smart Elements	UM EN AXL SE SYS INST	-	-
User manual, English, Axioline F: System and installation	UM EN AXL F SYS INST	-	-
User manual, English, Axioline F: Diagnostic registers, and error messages	UM EN AXL F SYS DIAG	-	-

Additional ordering data	
For additional ordering data (accessories), go to:	www.phoenixcontact.com/product/1088062

4 Technical data

Dimensions (nominal sizes in mm)

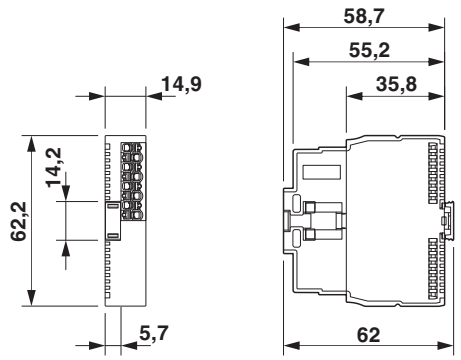

Width	14.9 mm
Height	62.2 mm
Depth	62 mm

General data	
Color	Housing: traffic grey A (RAL 7042)
Weight	34 g
Ambient temperature (operation)	-25 °C ... 60 °C
Ambient temperature (storage/transport)	-40 °C ... 85 °C
Permissible humidity (operation)	5 % ... 95 % (non-condensing)
Permissible humidity (storage/transport)	5 % ... 95 % (non-condensing)
Air pressure (operation)	70 kPa ... 106 kPa (up to 3000 m above sea level)
Air pressure (storage/transport)	70 kPa ... 106 kPa (up to 3000 m above sea level)

General data	
Degree of protection	IP20
Protection class	III (IEC 61140, EN 61140, VDE 0140-1)
Overvoltage category	II (IEC 60664-1, EN 60664-1)
Degree of pollution	2 (IEC 60664-1, EN 60664-1)
Mounting type	Smart Element slot
Mounting position	See the system in which the Smart Element is used.

Do not use the Smart Element in an atmosphere that contains corrosive gas.

Connection data: I/O	
Connection method	Push-in connection
Conductor cross section, rigid	0.25 mm^2 ... 1.5 mm^2
Conductor cross section, flexible	0.25 mm^2 ... 1.5 mm^2
Conductor cross section [AWG]	24 ... 16
Conductor cross section flexible, with ferrule with plastic sleeve	0.25 mm^2 ... 1.5 mm^2
Conductor cross section flexible, with ferrule without plastic sleeve	0.25 mm^2 ... 1.5 mm^2
Stripping length	8 mm

Please observe the information provided on conductor cross sections in the “Axioline Smart Elements” user manual.

Interface: Smart Element interface	
Number of interfaces	1
Connection method	Card edge connector
Start time until ready to operate	< 1000 ms

Communications power supply of the Smart Elements (U_{SE})	
Supply voltage	using card edge connectors
Current draw	See documentation for the system in which the Smart Element is used.

I/O supply (U_P)	
Nominal supply voltage	24 V DC (using card edge connectors)
Supply voltage range	19.2 V DC ... 30 V DC (including all tolerances, including ripple)
Current consumption	min. 12 mA (without connected peripherals) typ. 15 mA max. 20 mA
Power consumption	min. 288 mW max. 480 mW
Surge protection	See the system in which the Smart Element is used.
Reverse polarity protection	Polarity protection diode
Protection	See the system in which the Smart Element is used.

Analog inputs	
Number of inputs	4
Description of the input	Single-ended inputs, current
Connection method	Push-in technology
Connection technology	2-conductor, shielded, twisted pair
Current input signal	4 mA ... 20 mA
Permissible voltage	max. 2.5 V
A/D converter resolution	12 bit
Measured value representation	16 bits
Data formats	Standardized representation
Process data update	typ. 1 ms
Tolerance, relative	typ. 0.1 % (of measuring range end value) max. 0.3 % (of measuring range end value)
Input resistance current input	max. 60 Ω
Transient protection	yes

Input and output address area	
Input address area	8 Byte
Output address area	8 Byte

Configuration and parameter data in a PROFIBUS system	
Required parameter data	24 Byte
Required configuration data	6 Byte

Electrical isolation/isolation of the voltage areas	
Test section	**Test voltage**
Communications supply / 24 V supply (I/O)	500 V AC, 50 Hz, 1 min.
Communications supply / functional ground	500 V AC, 50 Hz, 1 min.
24 V supply (I/O) / functional ground	500 V AC, 50 Hz, 1 min.

Mechanical tests	
Vibration resistance in accordance with EN 60068-2-6/IEC 60068-2-6	5g
Shock in accordance with EN 60068-2-27/IEC 60068-2-27	30g
Continuous shock in accordance with EN 60068-2-27/IEC 60068-2-27	10g

Conformance with EMC Directive 2014/30/EU	
Immunity test in accordance with EN IEC 61000-6-2	
Electrostatic discharge (ESD) IEC 61000-4-2	Criterion B, ±6 kV contact discharge, ±8 kV air discharge
Electromagnetic fields IEC 61000-4-3	Criterion A, Field intensity: 10 V/m
Fast transients (burst) IEC 61000-4-4	Criterion A, ±2 kV
Transient overvoltage (surge) IEC 61000-4-5	Criterion B, shielded I/O cables: ±1 kV asymmetrical
Conducted interference IEC 61000-4-6	Criterion A, Test voltage 10 V
Noise emission test in accordance with EN IEC 61000-6-4	Class A

Approvals	
For the current approvals, go to:	www.phoenixcontact.com/product/1088062

Manufacturer's declarations	
For the current manufacturer’s declarations, go to:	www.phoenixcontact.com/product/1088062

5 Tolerance data

Additional tolerances influenced by electromagnetic interference		
Electromagnetic fields	EN 61000-4-3/IEC 61000-4-3	< ±0.5 %
Fast transients (burst)	EN 61000-4-4/IEC 61000-4-4	< ±0.5 %
Conducted interference	EN 61000-4-6/IEC 61000-4-6	< ±0.5 %

6 Internal circuit diagram

Figure 1 Internal wiring of the terminal points

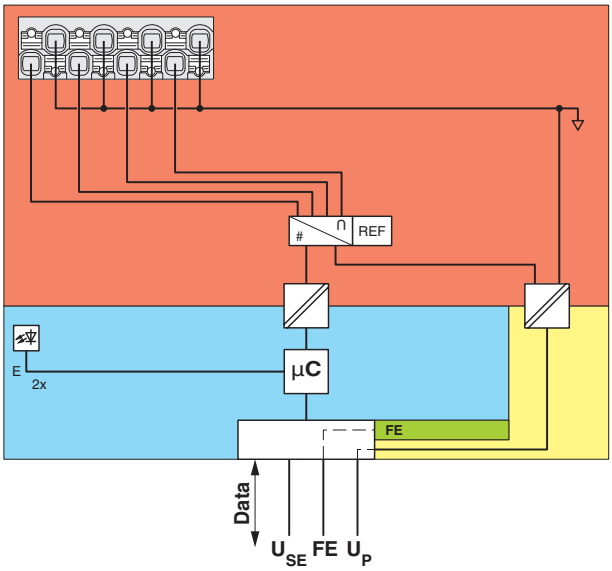

Key:

Data	Data transmission
U_{SE}	Communications power supply of the Smart Element
FE	Functional ground
U_P	I/O supply of the Smart Element
µC	Microcontroller
	LED
	Electrical isolation for data or power supply
	Analog/digital converter
REF	Reference voltage source
	Electrically isolated areas

7 For your safety

7.1 Intended use

Use Smart Elements exclusively in accordance with the specifications in the data sheet and the “Axioline Smart Elements” user manual.
Please also refer to the documentation for the system in which the Smart Elements are used.

7.2 Qualification of users

The use of products described in this data sheet is oriented exclusively to electrically skilled persons or persons instructed by them. The users must be familiar with the relevant safety concepts of automation technology as well as applicable standards and other regulations.

7.3 Disconnecting or plugging in a Smart Element

NOTE: Damage to contacts or malfunction

Before performing work on a Smart Element, disconnect the power to the Smart Element.

This means:

- Disconnect the connected I/O devices from the power.
- Switch off the I/O supply voltage U_P!
- Switch off the communications power U_{SE}. For the system in which the Smart Element is used, this means the following: Switch off the voltage that generates the U_{SE}.

7.4 Strain relief

NOTE: damage to the contacts

Physical overloads can result in damage to the terminal points.

- Relieve strain in the connected cables.

7.5 Locking a Smart Element

Make sure that each Smart Element is locked in its slot. This is only ensured if the unlocking mechanism has been pushed into the guide as far as it will go.

See “Axioline Smart Elements” user manual.

7.6 Applications with UL approval

CAUTION!

– The external circuits intended to be connected to this device shall be galvanically separated from the mains supply or hazardous live voltage by reinforced or double insulation and meet the requirements of SELV/PELV (Class III) circuits of UL/CSA/IEC 61010-1, UL/CSA/IEC 61010-2-201.
– The device has to be installed in the final safety enclosure, which has adequate rigidity according to UL 61010-1, UL 61010-2-201 and meets the requirements with respect to spread of fire.

Information:

To install the device in accordance with UL/CSA/IEC standard, the following notes must be observed.

– If the equipment is not used in specified manner, the protection provided by the equipment may be impaired.
– Minimum temperature rating of the cables to be connected to the field wiring terminals:
  85 °C, AWG 24 ... 16
– Use copper conductors only.

8 Terminal point assignment and diagnostic indicators

Figure 2 Terminal point assignment and diagnostic indicators

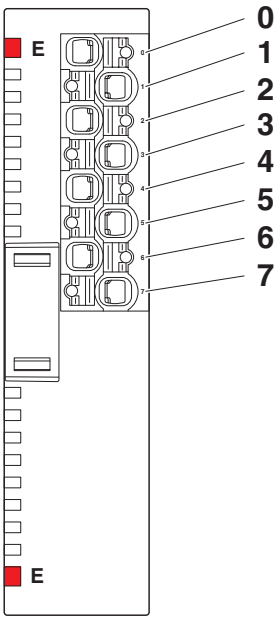

8.1 Terminal point assignment

Terminal point	Assignment	Channel	Signal
0	Analog input	1	IN01
1	Reference potential	1 ... 4	GND
2	Analog input	2	IN02
3	Reference potential	1 ... 4	GND
4	Analog input	3	IN03
5	Reference potential	1 ... 4	GND
6	Analog input	4	IN04
7	Reference potential	1 ... 4	GND

8.2 Local diagnostics indicator

Designation	Color	Description	
E	Red	Error	
		Off	No error
		Flashing (0.5 Hz)	Error in Smart Element Replace the Smart Element.
		Flashing (4 Hz)	Communication error Check whether the Smart Element has been plugged in correctly.
		On	I/O error Check the connected components and wiring. Remove the error.

See also “Diagnostic state (0018_{hex}: DiagState)” section, “Possible error codes” table.

9 Connection example

Figure 3 Connection of a sensor for current measurement and an active pressure sensor

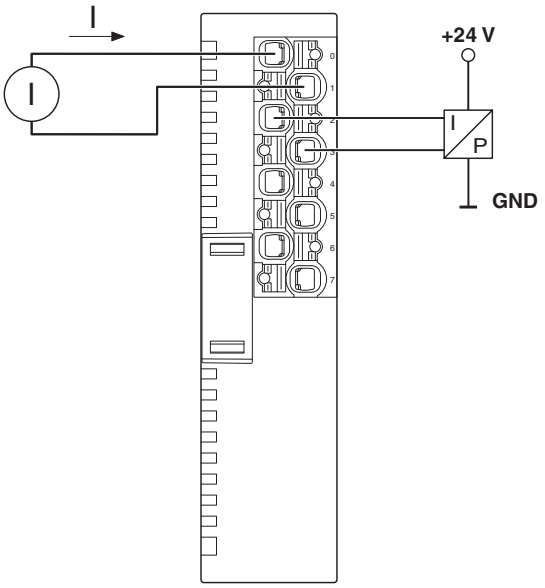

10 Connection notes

Observe the connection notes by the sensor manufacturer.

Shielding

Always connect the analog sensors using shielded, twisted pair cables.

In environments with high levels of interference, unshielded cables may cause values to be outside the specified tolerance limits.

For installation in a control cabinet: Connect the cable shield to the functional ground at a suitable point immediately after entry into the control cabinet. Route the cable in the control cabinet in a shielded manner.

If a closed control cabinet is not available, connect the shield to a shield bus.

Connect the shielding in accordance with the specifications for the system in which you are using the Smart Element.

Within an Axioline F station, the AXL SHIELD SET Axioline shield connection set is available for optimal connection directly in front of the module, see user manual UM EN AXL F SYS INST.

In general, you can use Phoenix Contact products for shielding, see www.phoenixcontact.net/webcode/#0845.

Strain relief

Do not use the shield contact as a strain relief. Carry out the shielding and the strain relief separately.

11 Using AXL SE PD ...

Smart Elements for potential distribution can also be used to supply the sensors.

Please observe the following notes in this case:

- Place the negative connection (I-) of your sensor or signal conditioner on the GND potential.
  To avoid potential looping with other measuring channels, insert a 3-way isolator if necessary (e.g., MINI MCR-2-...)
- If you provide signals with signal conditioners: To avoid looping of the measuring circuits, use 3-way isolators.
- In order not to damage the measuring inputs of the AXL SE AI4 I, do not switch the 24 V supply voltage of the AXL SE PD ... directly to the measuring inputs.
- Ground the GND of the supplying 24 V DC power supply unit as required by the Machinery Directive. If this is not the case, the measured values could fluctuate on the Smart Element AXL SE AI4 I.
- The quality of the provided 24 V supply voltage has a direct influence on the quality of the sensor supply (residual ripple and noise).

11.1 Connection of a 3-way temperature measuring transducer

Figure 4 Connection of a 3-way temperature measuring transducer

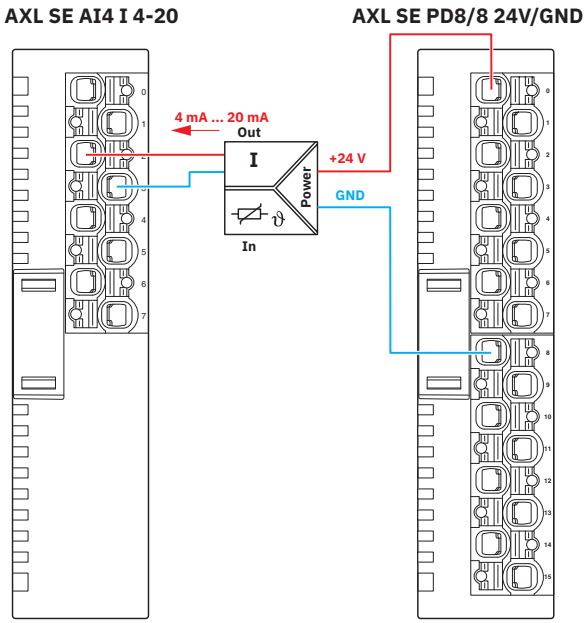

11.2 Connection of a passive 2-conductor transmitter for resistance measurement

Figure 5 Connection of a passive 2-conductor transmitter for resistance measurement

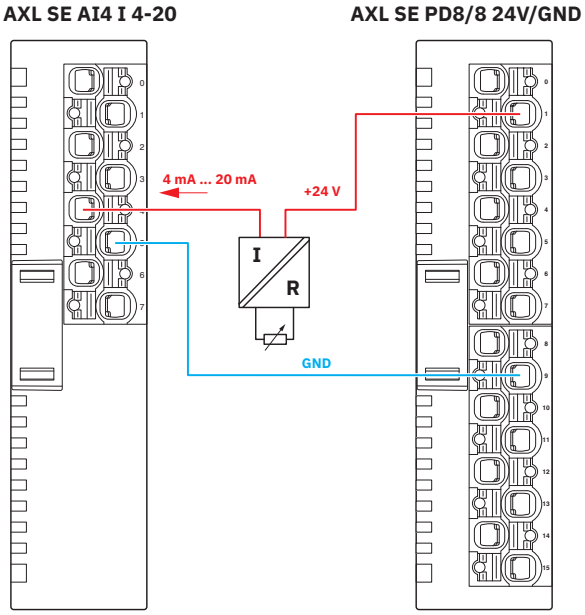

12 Process data

The process data is mapped in Motorola format (Big Endian).

The Smart Element occupies four words of input process data and four words of output process data.

Each channel is mapped to a word.

The measured values are transmitted to the higher-level system via the input process data words.

The output process data words are not relevant.

Order of the input process data words

Word	0	1	2	3
Signal	IN01	IN02	IN03	IN04
Value	AV01	AV02	AV03	AV04

AV Analog value

The measured values are depicted in standardized representation format.

In this format, data is standardized to the measuring range. Data is represented in such a way that it indicates the corresponding value without conversion.

The measured value is represented in 16 bits.

15	14	13	12	11	10	9	8	7	6	5	4	3	2	1	0
Analog value															

13 Representation of measured values

Input data		4 mA ... 20 mA
hex	dec	mA
8001	Measuring range exceeded (overrange)	> +21.339
43BB	17339	+21.339
3E80	16000	+20.0
2710	10000	+14.0
1770	6000	+10.0
1388	5000	+9.0
03E8	1000	+5.0
0001	1	+4.001
0000	0	+4.0 ... +3.2
8002	Wire break	< +3.2

In the default setting, in the event of an I/O error the diagnostic code is mapped to the input process data. If the Smart Element should behave differently in the event of an I/O error, you can parameterize this accordingly. See “Substitute value behavior during I/O error (PDIN) (0030_{hex}: PF_Code)”.

Diagnostic codes	
Code (hex)	Meaning
8001	Measuring range exceeded (overrange)
8002	Wire break
8010	Parameter error
8020	I/O supply voltage (U_P) is not present.
8040	Smart Element faulty

14 Parameter, diagnostics and information (PDI)

Parameter and diagnostic data as well as other information are transmitted as objects via the PDI channel.

For more detailed information on all possible standard objects for Axioline Smart Elements, please refer to the UM EN AXL SE SYS INST user manual.

The standard objects necessary for operation are described in the following section.

The following applies for the tables below:

Abbreviation	Meaning
Length in bytes	Maximum length of the elements in bytes
R	Read
W	Write
[x]	Number of elements in an array or record

15 Standard objects

Index (hex)	Object name	Data type	Length in bytes	Rights	Meaning/contents		Startup parameters	
Device type								
0037	DeviceType	Octet string	8	R	Device type	0020 0008 0000 1A0C$_{hex}$	No	
Diagnostics objects								
0018	DiagState	Record [11]	74	R	Diagnostic state		No	*
0019	ResetDiag	UINT8	1	R/W	Handling diagnostic messages		No	*
Objects for process data management								
0025	PDIN	Octet string	8	R	Input process data The structure corresponds to the representation in the "Process data" section.		No	
0026	PDOUT	Octet string	8	R	OUT process data, not applicable		No	
0030	PF_Code	Array [4] of UINT16	8	R/W	Substitute value behavior during I/O error (PDIN)		Yes	*
Objects for device management								
002D	ResetParam	UINT8	1	R/W	Reset parameterization		No	*

Startup parameters are stored in the non-volatile flash memory.

The objects identified with * in the last column are described in more detail in the following sections.

The description of the other objects is to be found in the user manual UM EN AXL F SYS INST.

15.1 Diagnostics state (0018_{hex}: DiagState)

This object is used for a structured message of an error.

Read off all information via subindex 00 to receive all information on an error number. Access to individual elements of the object is not permitted.

A detailed description of the object is provided in user manual UM EN AXL F SYS INST.

Possible error codes

Element	02	03	04	08	0B		
Error	Priority	Channel	Error code	Function group	Text	E LED	Corrective
	hex	hex	hex				
No error	00	00	0000	General	Status OK	○	
I/O supply voltage (U_P) is not present.	01	FF	3130	General	Supply missing (U_P)	●	Check the supply voltage.
Error in the Smart Element firmware	01	FF	6100	General	Firmware error, update required	●	Replace the Smart Element.
Problem communicating with the Smart Element	01	FF	6130	General	Smart Element missing	✹	Check whether the Smart Element has been plugged in correctly. If the error is still present, replace the Smart Element.
Fault in the Smart Element firmware	01	FF	6302	General	Firmware defect	✷	Replace the Smart Element.
Error in the parameter memory	01	FF	6320	General	Parameter error, repeat parameterization	●	Error in the parameter memory. Parameterize the Smart Element.
Wire break on signal line	01	FF	7710	AI	Open circuit	●/○	Check the connected components and wiring.
Measuring range violated (overrange)	02	FF	8910	AI	Overrange	○	Check the wiring.

Key

Priority	00_{hex}	No error
	01_{hex}	Error
	02_{hex}	Warning
Channel	00_{hex}	No error
	FF_{hex}	Entire device

LED	○	Off
	●	On
	●/○	On, if wire-break monitoring is active
		Off, if wire-break monitoring is inactive
	✷	Flashing (0.5 Hz)
	✹	Flashing (4 Hz)

The “Signal line wire break” malfunction will only be reported via object 0018_{hex} if you have parameterized wire-break monitoring as active. This is inactive in the default state.

See “Wire-break monitoring (0203_{hex}: WirebreakDetection)”.

15.2 Handling diagnostic messages (0019_{hex}: ResetDiag)

You can use this object to specify how the Smart Element should handle diagnostic messages.

Handling diagnostic messages	
Value (hex)	**Meaning**
00	**Permit all diagnostic messages (default)**
02	Delete and acknowledge all diagnostic messages that are still pending
06	Delete and acknowledge all diagnostic messages and do not permit new diagnostic messages
Other	Reserved

15.3 Substitute value behavior during I/O error (PDIN) (0030_{hex}: PF_Code)

This object is used to parameterize the substitute value that is to be transmitted via the input process data in the event of an I/O error for each channel.

0030_{hex}: Substitute value behavior during I/O error (PDIN) (read, write)			
Subindex (hex)	**Data type**	**Length in bytes**	**Meaning**
00	Array [4] of UINT16	8	Read or write entire object.
01	UINT16	2	Substitute value behavior channel 1
:	:	:	:
04	UINT16	2	Substitute value behavior channel 4

Substitute value behavior during I/O error (PDIN)	
Value (hex)	**Meaning**
0000	Set input value to zero value (4 mA)
0001	Set input value to final value (20 mA)
0002	Hold last value
0004	**Map diagnostic code to the input process data (default)**
Other	Reserved

Diagnostic codes	
Code (hex)	**Meaning**
Diagnostic codes that are mapped to the input process data regardless of the parameterization	
8010	Parameter error
8040	Smart Element faulty
Diagnostic codes that are only mapped to the input process data when parameterized accordingly	
8001	Measuring range exceeded (overrange)
8002	Wire break
8020	I/O supply voltage (U_P) is not present.

15.4 Reset parameterization ($002D_{hex}$: ResetParam)

Use this object to reset certain parameters to the factory default settings (default values).

To reset the parameters, value 01_{hex} must be transferred during write access.

Reset the following parameters using this object:

Index (hex)	Object name	Meaning
Standard objects		
0030	PF_Code	Substitute value behavior during I/O error (PDIN)
Application objects		
0203	WirebreakDetection	Wire-break monitoring

16 Application objects

Index (hex)	Object name	Data type	L	Rights	Meaning/contents	Startup parame-ters
0203	WirebreakDetection	Array [4] of UINT8	4	RW	Wire-break monitoring	Yes

16.1 Wire-break monitoring (0203_{hex}: WirebreakDetection)

Wire-break monitoring is always active. However, you can parameterize whether and how the wire break should be indicated.

You can use this object to parameterize whether or not a wire break should be reported in the diagnostic state object (0018_{hex}: DiagState) and via LED E. This parameterization has no effect on the mapping of the corresponding diagnostic code to the input process data.

You can use object 0030_{hex} to parameterize whether or not the corresponding diagnostic code 8002_{hex} should be mapped to the input process data.
See “Substitute value behavior during I/O error (PDIN) (0030_{hex}: PF_Code)”.

0203_{hex}: wire-break monitoring (read/write)			
Subindex (hex)	**Data type**	**Length in bytes**	**Meaning/contents**
00	Array [4] of UINT8	4	Read or write entire object.
01	UINT8	1	Wire-break monitoring channel 1
:	:	:	:
04	UINT8	1	Wire-break monitoring channel 4

Wire-break monitoring	
0	**Inactive (default)**
1	Active

17 Device descriptions

The device is described in the device description files.
The device descriptions for controllers from Phoenix Contact are included in PC Worx and PLCnext Engineer, as well as in the corresponding service packs.
The device description files for other systems are available for download at www.phoenixcontact.com/products in the download area of the bus coupler installed.

AXL SE RS485

Axioline Smart Elements, communication module, serial data transmission, interface: 1 (RS-485)

Data sheet
108701_en_04

 2023-06-23

1 Description

You can integrate Axioline Smart Elements into systems with the Smart Element interface.
This Smart Element is used to operate standard I/O devices with a serial interface on a bus system.

Features

- One serial input and output channel in RS-485 format
- Data is transmitted in transparent mode
- Transmission speed can be set up to 230,400 bps
- Number of data bits, stop bits and parity can be set
- Device rating plate stored

This data sheet is only valid in association with the UM EN AXL SE SYS INST user manual.

Make sure you always use the latest documentation.
It can be downloaded at: phoenixcontact.net/product/1088128

2 Table of contents

3 Ordering data

Description	Type	Item no.	Pcs./Pkt.
Axioline Smart Elements, Communication module, interface: RS-485, degree of protection: IP20	AXL SE RS485	1088128	1

Documentation	Type	Item no.	Pcs./Pkt.
User manual, English, Axioline Smart Elements	UM EN AXL SE SYS INST	-	-
User manual, English, Axioline F: System and installation	UM EN AXL F SYS INST	-	-
User manual, English, Axioline F: Diagnostic registers, and error messages	UM EN AXL F SYS DIAG	-	-
Application note, English, Transmitting and receiving data with devices featuring a serial interface	AH EN RS-232/RS-485/RS-UNI	-	-

Additional ordering data	
For additional ordering data (accessories), go to:	www.phoenixcontact.net/product/1088128

4 Technical data

Dimensions (nominal sizes in mm)

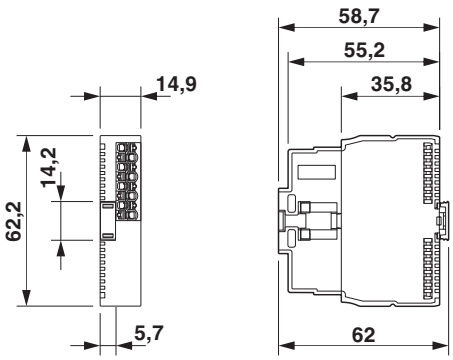

Width	14.9 mm
Height	62.2 mm
Depth	62 mm

General data	
Color	traffic grey A RAL 7042
Weight	33 g
Ambient temperature (operation)	-25 °C ... 60 °C
Ambient temperature (storage/transport)	-40 °C ... 85 °C
Permissible humidity (operation)	5 % ... 95 % (non-condensing)
Permissible humidity (storage/transport)	5 % ... 95 % (non-condensing)

General data	
Air pressure (operation)	70 kPa ... 106 kPa (up to 3000 m above sea level)
Air pressure (storage/transport)	70 kPa ... 106 kPa (up to 3000 m above sea level)
Degree of protection	IP20
Protection class	III (IEC 61140, EN 61140, VDE 0140-1)
Overvoltage category	II (IEC 60664-1, EN 60664-1)
Degree of pollution	2 (IEC 60664-1, EN 60664-1)
Mounting type	Smart Element slot
Mounting position	See the system in which the Smart Element is used.

Do not use the Smart Element in an atmosphere that contains corrosive gas.

Connection data: I/O	
Connection method	Push-in connection
Conductor cross section, rigid	0.25 mm^2 ... 1.5 mm^2
Conductor cross section, flexible	0.25 mm^2 ... 1.5 mm^2
Conductor cross section [AWG]	24 ... 16
Conductor cross section flexible, with ferrule with plastic sleeve	0.25 mm^2 ... 1.5 mm^2
Conductor cross section flexible, with ferrule without plastic sleeve	0.25 mm^2 ... 1.5 mm^2
Stripping length	8 mm

Please observe the information provided on conductor cross sections in the “Axioline Smart Elements” user manual.

Interface: Smart Element interface	
Number of interfaces	1
Connection method	Card edge connector
Start time until ready to operate	< 500 ms

Interface: RS-485	
Number of interfaces	1
Connection method	Push-in connection
Note on the connection method	Use shielded cables.
Transmission speed	1200 bps ... 230,400 bps (can be parameterized)
Transmission physics	Copper
Protocols supported	Transparent
Input buffer	4 kByte
Output buffer	1 kByte
Data bits	7 or 8
Stop bits	1 or 2
Parity	Even, odd or no parity

Interface: RS-485	
Termination resistor	120 Ω (active, integrated)
Idle time	30 µs (between sending and receiving data)
Process data update	540 µs

Communications power supply of the Smart Elements (U_{SE})	
Supply voltage	using card edge connectors
Current draw	See documentation for the system in which the Smart Element is used.

I/O supply (U_P)	
Nominal supply voltage	24 V DC (using card edge connectors)
Supply voltage range	19.2 V DC ... 30 V DC (including all tolerances, including ripple)
Current consumption	min. 6 mA (without connected peripherals) typ. 10 mA max. 18 mA
Power consumption	min. 144 mW max. 530 mW
Surge protection	See the system in which the Smart Element is used.
Reverse polarity protection	Polarity protection diode
Protection	See the system in which the Smart Element is used.

Input and output address area	
Input address area	20 Byte
Output address area	20 Byte

Configuration and parameter data in a PROFIBUS system	
Required parameter data	10 Byte
Required configuration data	7 Byte

Electrical isolation/isolation of the voltage areas	
Test section	**Test voltage**
Communications supply / 24 V supply (I/O)	500 V AC, 50 Hz, 1 min.
Logic supply / RS-485 interface	500 V AC, 50 Hz, 1 min.
Communications supply / functional ground	500 V AC, 50 Hz, 1 min.
24 V supply (I/O) / RS-485 interface	500 V AC, 50 Hz, 1 min.
24 V supply (I/O) / functional ground	500 V AC, 50 Hz, 1 min.
RS-485 interface / functional ground	500 V AC, 50 Hz, 1 min.

Mechanical tests	
Vibration resistance in accordance with EN 60068-2-6/IEC 60068-2-6	5g
Shock in accordance with EN 60068-2-27/IEC 60068-2-27	30g
Continuous shock in accordance with EN 60068-2-27/IEC 60068-2-27	10g

Conformance with EMC Directive 2014/30/EU	
Immunity test in accordance with EN 61000-6-2/IEC 61000-6-2	
Electrostatic discharge (ESD) EN 61000-4-2/IEC 61000-4-2	Criterion B, 6 kV contact discharge, 8 kV air discharge
Electromagnetic fields EN 61000-4-3/IEC 61000-4-3	Criterion A, Field intensity: 10 V/m
Fast transients (burst) EN 61000-4-4/IEC 61000-4-4	Criterion B, 2 kV
Transient overvoltage (surge) EN 61000-4-5/IEC 61000-4-5	Criterion B, shielded I/O cables: ±1 kV asymmetrical
Conducted interference EN 61000-4-6/IEC 61000-4-6	Criterion A, Test voltage 10 V
Noise emission test in accordance with EN 61000-6-4/IEC 61000-6-4	Class A

Approvals	
For the current approvals, go to:	www.phoenixcontact.net/product/1088128

Manufacturer's declarations	
For the current manufacturer’s declarations, go to:	www.phoenixcontact.net/product/1088128

5 Internal circuit diagram

Figure 1 Internal wiring of the terminal points

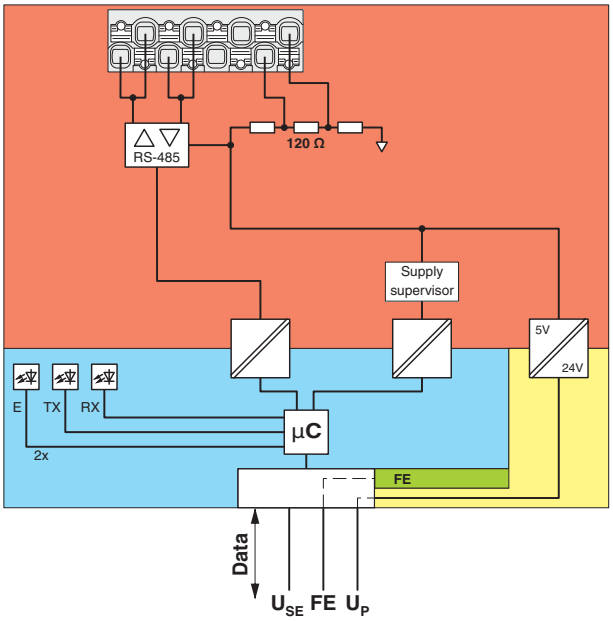

Key:

Data	Data transmission
U_{SE}	Communications power supply of the Smart Element
FE	Functional ground
U_P	I/O supply of the Smart Element
µC	Microcontroller
	Electrical isolation for data or power supply
	LED
Supply supervisor	Monitoring the supply voltage
	RS-485 interface active
	Electrically isolated areas

6 For your safety

6.1 Intended use

Use Smart Elements exclusively in accordance with the specifications in the data sheet and the “Axioline Smart Elements” user manual.
Please also refer to the documentation for the system in which the Smart Elements are used.

6.2 Qualification of users

The use of products described in this data sheet is oriented exclusively to electrically skilled persons or persons instructed by them. The users must be familiar with the relevant safety concepts of automation technology as well as applicable standards and other regulations.

6.3 Disconnecting or plugging in a Smart Element

NOTE: Damage to contacts or malfunction

Before performing work on a Smart Element, disconnect the power to the Smart Element.

This means:

- Disconnect the connected I/O devices from the power.
- Switch off the I/O supply voltage U_P!
- Switch off the communications power U_{SE}. For the system in which the Smart Element is used, this means the following: Switch off the voltage that generates the U_{SE}.

6.4 Strain relief

NOTE: damage to the contacts

Physical overloads can result in damage to the terminal points.

- Relieve strain in the connected cables.

6.5 Locking a Smart Element

Make sure that each Smart Element is locked in its slot. This is only ensured if the unlocking mechanism has been pushed into the guide as far as it will go.

See “Axioline Smart Elements” user manual.

6.6 Applications with UL approval

CAUTION!

- The external circuits intended to be connected to this device shall be galvanically separated from the mains supply or hazardous live voltage by reinforced or double insulation and meet the requirements of SELV/PELV (Class III) circuits of UL/CSA/IEC 61010-1, UL/CSA/IEC 61010-2-201.
- The device has to be installed in the final safety enclosure, which has adequate rigidity according to UL 61010-1, UL 61010-2-201 and meets the requirements with respect to spread of fire.

Information:

To install the device in accordance with UL/CSA/IEC standard, the following notes must be observed.

- If the equipment is not used in specified manner, the protection provided by the equipment may be impaired.
- Minimum temperature rating of the cables to be connected to the field wiring terminals:
  85 °C, AWG 24 ... 16
- Use copper conductors only.

7 Terminal point assignment as well as diagnostics and status indicators

Figure 2 Terminal point assignment as well as diagnostics and status indicators

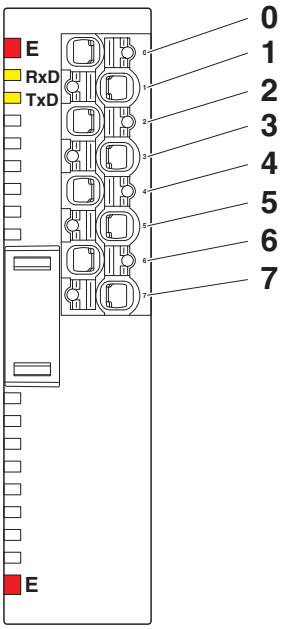

7.1 Terminal point assignment

Terminal point	Signal	Description	
0	RxD+, TxD+	Receive/transmit data	positive
1	RxD+, TxD+	Receive/transmit data	positive
2	RxD-, TxD-	Receive/transmit data	negative
3	RxD-, TxD-	Receive/transmit data	negative
4	-	Not used	
5	-	Not used	
6	R+	Termination resistor	Positive pole
7	R-	Termination resistor	Negative pole

Terminal points 0 and 1 are bridged internally in the device, as are terminal points 2 and 3.

7.2 Local diagnostics and status indicators

Designation	Color	Description	
E	Red	Error	
		Off	No error
		Flashing (0.5 Hz)	Error in Smart Element Replace the Smart Element.
		Flashing (4 Hz)	Communication error Check whether the Smart Element has been plugged in correctly.
		On	I/O error Check the connected components and wiring. Remove the error.
RxD	Yellow	Receiving data	
		On	The Smart Element is receiving data from the connected device.
		Off	The Smart Element is not receiving any data.
TxD	Yellow	Transmit data	
		On	The Smart Element is transmitting data to the connected device.
		Off	The Smart Element is not transmitting any data.

See also “Diagnostic state (0018_{hex}: DiagState)” section, “Possible error codes” table.

8 Connection examples

Special feature	Notes
Smart Element as the network end point	Termination resistor required
Smart Element in the middle of a network	Termination resistor not required

8.1 Smart Element as the network end point

Fit a termination resistor to the RS-485 network at each endpoint.

Figure 3 Smart Element as the network end point

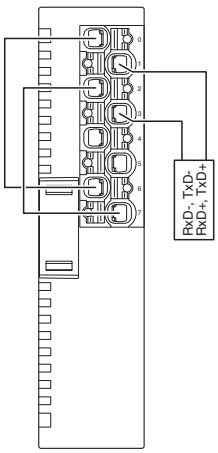

8.2 Smart Element in the middle of a network

Figure 4 Smart Element in the middle of a network

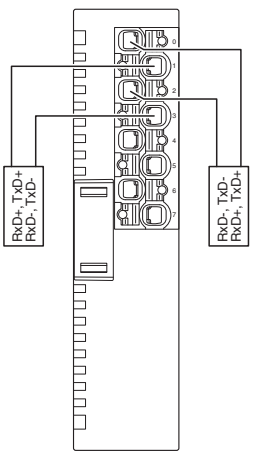

9 Connection notes

Observe the connection instructions of the manufacturer of the device to be connected.

Termination resistor

Fit the receive signals of the RS-485 network with a termination resistor at the relevant end point.

If you use the integrated termination resistor, the polarization of the data cable will also be active.

Shielding

For installation in a control cabinet: Connect the cable shield to the functional ground at a suitable point immediately after entry into the control cabinet. Route the cable in the control cabinet in a shielded manner.

If a closed control cabinet is not available, connect the shield to a shield bus.

Connect the shielding in accordance with the specifications for the system in which you are using the Smart Element.

Within an Axioline F station, the AXL SHIELD SET Axioline shield connection set is available for optimal connection directly in front of the module, see user manual UM EN AXL F SYS INST.

In general, you can use Phoenix Contact products for shielding, see www.phoenixcontact.net/webcode/#0845.

Strain relief

Do not use the shield contact as a strain relief. Carry out the shielding and the strain relief separately.

10 RS-485 serial interface

With RS-485, you can create a network with several devices using an existing network consisting of two signal lines.

Use a twisted-pair, common shielded data cable to connect the devices. Fit a termination resistor to the data cable at both end points of the RS-485 network. For this, you can use the integrated termination resistor in the Smart Element via connections R+ and R-.

If you use the integrated termination resistor, the data cable will also be polarized. This will generate a defined cable idle level.

The Smart Element supports only half duplex transmission. Make sure that data is not sent simultaneously by several devices.

11 Data storage and transmission

The Smart Element stores the received serial data in an intermediate buffer. The data is then requested at the serial interface by the higher-level system or the device. The serial data traffic is generated in accordance with the transparent protocol.

Receive memory	Transmit memory
4096 bytes	1023 bytes

If the transparent protocol is used, serial data is transmitted in the same format it is received from the serial interface or from the bus side.

The transmit FIFO (first-in, first-out memory) can store 1023 bytes (1 kB) and the receive FIFO can store 4096 bytes (4 kB). If the Smart Element receives another character after the 4095th, the error pattern is stored in the receive FIFO. All other subsequent characters are ignored.

The error pattern contains the character that is written to the FIFO if a character was received with errors (e.g., in the event of a parity error) or the receive memory is full.

The error pattern character is 24_{hex}.

12 Process data

The process data is mapped in Motorola format (Big Endian).

The Smart Element has ten words of process data each in the input direction and output direction. These are made up of 3 bytes of frame data and a maximum of 17 bytes of user data.

Assignment of the ten process data words

This assignment applies for the commands “Transmit characters”, “Store characters temporarily”, and “Read characters”.

Word	0		1		2		...	9	
Byte (Motorola format)	0	1	2	3	4	5	...	18	19
Byte (Intel format)	1	0	3	2	5	4	...	19	18
OUT	K/P	0	L	D	D	D	...	D	D
Signal	See "Control word"		OUT01	OUT02	OUT03	OUT04	...	OUT17	OUT18
IN	K/P	S	L	D	D	D	...	D	D
Signal	See "Status word"		IN01	IN02	IN03	IN04	...	IN17	IN18

K/P	Command/parameter
S	Status bits
L (OUT)	Length: number of characters to be written
L (IN)	Length: number of characters read
D	Data

The byte representation in Motorola format, also called Big Endian (high order byte at starting address), corresponds to INTERBUS standard representation. All byte representations in the data sheet have this format.

The byte representation in Intel format is also called Little Endian (low order byte at starting address).

The command is used to determine the function. The actually transmitted data depends on the command.

13 Process data word 0

13.1 Control word

Word	0															
Signal	Control word															
	Control word high byte								Control word low byte							
Bit	15	14	13	12	11	10	9	8	7	6	5	4	3	2	1	0
Assignment	0	Command			OUT parameter				0							

Commands

Code (bin)	Code (hex)	Command
000	0	Read number of characters received and fill level of the receive buffer
001	1	Transmit characters
010	2	Store characters temporarily
011	3	OUT parameter = 0_{hex}: Read characters
		OUT parameter = E_{hex}: Read counters
100	4	Reserved
101	5	Toggling command 1: Transmit characters
110	6	Toggling command 2: Store characters temporarily
111	7	Toggling command 3: Read characters

Command toggling

Command toggling is used to execute a command on a terminal again. In this way, a second command code is available for the same function.

This applies for the following commands:

- Transmit characters
- Store characters temporarily
- Read characters
- Read counters

Here, bit 14 is used for toggling. If, for example, you wish to transmit character strings in sequence, use command code 001_{bin} for the first transmission and then use 101_{bin} and 001_{bin} alternately.

13.2 Status word

Word	0															
Signal	Status word															
Signal	Status word high byte								Status word low byte							
Bit	15	14	13	12	11	10	9	8	7	6	6	4	3	2	1	0
Assignment	St	Command			IN parameter				Status bits							

Bit	Meaning	Signal
St	Error bit	Error

Reasons for an error bit set:

– Invalid parameter for the specified command
– Failure of I/O supply voltage U_P

Status bits

Bit	Signal	Meaning	
7	-	Reserved	
6	Tx_buf_not_empty	Transmit buffer not empty	
		0	Empty
		1	Not empty, transmission in progress
5	Tx_buf_full	Transmit buffer full	
		0	Not full
		1	Full
			Space remaining in the transmit buffer ≤ 30 characters
4	Rx_buf_full	Receive buffer full	
		0	Not full
		1	Full
			Space remaining in receive buffer ≤ 15 characters
3 ... 1	-	Reserved	
0	Rx_buf_not_empty	Receive buffer not empty	
		0	Empty
		1	Not empty, characters to be retrieved are still available

14 Commands

The application note AH DE RS-232/RS-485/RS-UNI describes an example of which sequences are required to send or receive data using a device with a serial interface. See: "Ordering data, documentation."

14.1 “Read number of characters received and fill level of the receive buffer” command

The command result is the number of characters that have been received but not yet read.

The number is a 16-bit value and is mapped to word 1.

This command can be used to first reach a minimum number of characters before transmitting the "Read characters" command.

The fill level of the receive buffer is specified in byte 4 as the command result.

Process data assignment for the “Read number of characters received and fill level of the receive buffer” command

Word	0		1		2		...	9	
Byte	0	1	2	3	4	5	...	18	19
OUT	00_{hex}	xx	xx	xx	xx	xx	...	xx	xx
IN	00_{hex}	Status bits	Number of characters received		Fill level	xx	...	xx	xx

Fill level	
Value (hex)	Number of kbytes free
00	4
01	< 3
02	< 2
03	< 1
Other values are not permitted.	

14.2 “Transmit characters” command

The transmit data located in the process data is stored in the transmit memory. From there the data is transmitted directly via the interface.

A maximum of 17 characters can be entered.

Specify the number of characters to be transmitted in the third byte.

Process data assignment for the “Transmit characters” command with 17 characters (Z1 - Z17)

Word	0		1		2		...	9	
Byte	0	1	2	3	4	5	...	18	19
OUT	10_{hex}	xx	17_{dez}	Z1	Z2	Z3	...	Z16	Z17
IN	10_{hex}	Status bits	xx	xx	xx	xx	...	xx	xx

Reasons for an error bit set:

- Byte 2 (number of characters to be transmitted)
  = 0 or > maximum user data length (17 characters)
- Not enough space in the intermediate buffer

14.3 "Store characters temporarily" command

If more than 17 characters are to be transmitted, the transmit data located in the process data is stored in an intermediate buffer which can store up to 340 characters. No characters are transmitted. The “Transmit characters” command is used to transmit temporarily stored data. In this way, blocks of up to 340 characters can be transmitted without a break. They are divided over 20 telegrams with 17 characters each, for example.

Process data assignment for the “Store characters temporarily” command with 17 characters (Z1 - Z17)

Word	0		1		2		...	9	
Byte	**0**	**1**	**2**	**3**	**4**	**5**	**...**	**18**	**19**
OUT	20_{hex}	xx	17_{dez}	Z1	Z2	Z3	...	Z16	Z17
IN	20_{hex}	Status bits	xx	xx	xx	xx	...	xx	xx

Reasons for an error bit set:

- Byte 2 (number of characters to be transmitted) = 0 or > maximum user data length (17 characters)
- Not enough space in the intermediate buffer

14.4 "Read characters" command

A maximum of 17 characters can be read.

Process data assignment for the “Read characters” command with 17 characters (Z1 - Z17)

Word	0		1		2		...	9	
Byte	**0**	**1**	**2**	**3**	**4**	**5**	**...**	**18**	**19**
OUT	30_{hex}	xx	xx	xx	xx	xx	...	xx	xx
IN	30_{hex}	Status bits	11_{hex}	Z1	Z2	Z3	...	Z16	Z17

14.5 "Read counters" command

This command can be used to read several counters. The counters are used for interface diagnostics.

Process data assignment for the "Read counters" command

Word	0		1		2		3		4		5		6	
Byte	**0**	**1**	**2**	**3**	**4**	**5**	**6**	**7**	**8**	**9**	**10**	**11**	**12**	**13**
OUT	$3E_{hex}$	00_{hex}	xx	xx	xx	xx	xx	xx	xx	xx	xx	xx	xx	xx
IN	$3E_{hex}$	Status bits	Number of valid characters received		Number of invalid characters received (parity, overrun or framing errors)		Number of characters transmitted		Reserved					

15 Parameter, diagnostics and information (PDI)

Parameter and diagnostic data as well as other information are transmitted as objects via the PDI channel.

For more detailed information on all possible standard objects for Axioline Smart Elements, please refer to the UM EN AXL SE SYS INST user manual.

The standard objects necessary for operation are described in the following section.

The following applies for the tables below:

Abbreviation	Meaning
A	Number of elements
L	Length of the elements in bytes
R	Read
W	Write

16 Standard objects

Index (hex)	Object name	Data type	A	L	Rights	Meaning/contents		Startup parameters	
Device type									
0037	DeviceType	Octet string	1	8	R	Device type	0000 0814 0000 1C01$_{hex}$	No	
Diagnostics objects									
0018	DiagState	Record	11	74	R	Diagnostic state		No	*
0019	ResetDiag	UINT8	1	1	R/W	Handling diagnostic messages		No	*
Objects for process data management									
0025	PDIN	Octet string	1	20	R	Input process data The structure corresponds to the representation in the "Process data" section.		No	
0026	PDOUT	Octet string	1	20	R	OUT process data The structure corresponds to the representation in the “Process data” section.		No	
Objects for device management									
002D	ResetParam	UINT8	1	1	R/W	Reset parameterization		No	*

The objects identified with * in the last column are described in more detail in the following sections.

The description of the other objects is to be found in the user manual UM EN AXL F SYS INST.

16.1 Diagnostics state (0018_{hex}: DiagState)

This object is used for a structured message of an error.

A detailed description of the object is provided in user manual UM EN AXL F SYS INST.

Possible error codes

Subindex	02	03	04	08	0B		
Error	Priority	Channel	Error code	Function group	Text	E LED	Corrective
	hex	hex	hex				
No error	00	00	0000	General	Status OK	○	
I/O supply voltage (U_P) is not present.	01	FF	3130	General	Supply missing (U_P)	●	Check the supply voltage.
Error in the Smart Element firmware	01	FF	6100	General	Firmware error, update required	●	Replace the Smart Element.
Problem communicating with the Smart Element	01	FF	6130	General	Smart Element missing	✹	Check whether the Smart Element has been plugged in correctly. If the error is still present, replace the Smart Element.
Error in the parameter memory	01	FF	6320	General	Parameter error, repeat parameterization	●	Error in the parameter memory. Parameterize the Smart Element.
Transmit buffer full	02	FF	8152	RS485	Tx buffer full	○	Check the parameters.
Receive buffer full	02	FF	815A	RS485	Rx buffer full	○	Read out the buffer.

Key

Priority	00_{hex}	No error
	01_{hex}	Error
	02_{hex}	Warning
Channel	00_{hex}	No error
	FF_{hex}	Entire device

LED	○	Off
	●	On
	✹	Flashing (4 Hz)

16.2 Handling diagnostic messages (0019_{hex}: ResetDiag)

You can use this object to specify how the Smart Element should handle diagnostic messages.

Handling diagnostic messages	
Value (hex)	**Meaning**
00	Permit all diagnostic messages
02	Delete and acknowledge all diagnostic messages that are still pending
06	Delete and acknowledge all diagnostic messages and do not permit new diagnostic messages
Other	Reserved

16.3 Reset parameterization ($002D_{hex}$: ResetParam)

Use this object to reset all parameters to the factory default settings (default values) as listed in the “Application objects” section.

To reset the parameters, value 01_{hex} must be transferred during write access.

17 Application objects

Index (hex)	Object name	Data type	A	L	Rights	Meaning	Startup parameters
0502	UART_Baudrate	UINT32	1	4	R/W	Baud rate	Yes
0503	UART_Databits	UINT8	1	1	R/W	Number of data bits	Yes
0504	UART_Parity	UINT8	1	1	R/W	Parity	Yes
0505	UART_Stopbits	UINT8	1	1	R/W	Number of stop bits	Yes

Startup parameters are stored permanently in the Flash memory.

Parameter value ranges and presets

The values displayed in bold are pre-settings.

Baud rate (bps)
1200
2400
4800
9600
15625
19200
38400
57600
115200
230400
Other values are not permitted.

Value (hex)	Number of data bits
07	7
08	**8**
Other values are not permitted.	

Value (hex)	Parity
00	None
01	Odd
02	**Even**
Other values are not permitted.	

Value (hex)	Number of stop bits
01	**1**
02	2
Other values are not permitted.	

18 Device descriptions

The device is described in the device description files.
The device descriptions for controllers from Phoenix Contact are included in PC Worx and PLCnext Engineer, as well as in the corresponding service packs.
The device description files for other systems are available for download at www.phoenixcontact.net/products in the download area of the bus coupler installed.

APP-LIC-RESY10X-REMOTE - License

1270964

https://www.phoenixcontact.com/ro/produse/1270964

License for using the RESY 10x Remote library. Use this library to implement a remote terminal unit (RTU) in accordance with IEC 60870-5-101 and -104 protocols.

Date comerciale

Număr articol	1270964
Unitate de ambalare	1 Bucată
Cantitate minimă pentru comandă	1 Bucată
Cod produs	DRDBDA
GTIN	4063151462314

Date tehnice

Product properties

Product type	License

System properties

Intended use for the software	Programming

License information

Type of license	Single-user license

Clasificări

ECLASS

ECLASS-11.0	27242505
ECLASS-13.0	27242505
ECLASS-12.0	27242505

ETIM

ETIM 9.0	EC002582

UNSPSC

UNSPSC 21.0	93151500

Environmental product compliance

EU RoHS

Îndeplinește cerințele conform directivei RoHS	Nu se aplică, niciun echipament electric și electronic

EU REACH SVHC

Trimitere la substanța candidată REACH (nr. CAS)	Nicio substanță cu un procentaj masic mai mare de 0,1 %

APP-LIC-RESY10X-REMOTE - License

1270964

https://www.phoenixcontact.com/ro/produse/1270964

Accesorii

PLCNEXT ENGINEER - Programming software

1046008

https://www.phoenixcontact.com/ro/produse/1046008

Engineering software platform for Phoenix Contact automation controllers. PLCnext Engineer is IEC 61131-3-compliant and is available free of charge under Downloads. Its functionality can be extended using paid add-ins. To do this, open the license configurator via the “Configure” button.

PHOENIX CONTACT România
Splaiul Unirii 165 Timpuri Noi Square TNO1, Etaj 1
Bucuresti 030133
+40 21 350 88 12 - 3
sales.ro@phoenixcontact.com

TP 6121-WXPS - Touch panel

1190420

https://www.phoenixcontact.com/no/products/1190420

Please be informed that the data shown in this PDF document is generated from our online catalog. Please find the complete data in the user documentation. Our general terms of use for downloads are valid.

IP66 Touch panel with 12.1-inch widescreen (16:9) XGA, PCAP display, software: Visu+ RT

Your advantages

- PCAP touch interface, ten-point multi touch control
- Fanless design
- Dual USB 2.0 ports
- Integrated Visu+ visualization software
- Ideal for use with PLCnext
- Configurable multifunction serial port

Commercial data

Item number	1190420
Packing unit	1 pc
Minimum order quantity	1 pc
Sales key	31NDRC
Product key	DRCADC
GTIN	4063151239985
Weight per piece (including packing)	2,260 g
Weight per piece (excluding packing)	2,100 g
Customs tariff number	84714100
Country of origin	TW

Technical data

Product properties

Product type	Operator panel

Computer data

Processor	Arm® Cortex®-A9, 800 MHz
Operating system	Windows® Embedded Compact 7
Data storage system	Flash eMMC, 8 GB
Slots	1x microSD

Display

Display type	30.7 cm/12.1" TFT
Screen resolution	1280 x 800 Pixel(s) (WXGA)
Touch technology	projective-capacitive (PCAP)
Display lighting type	LED
Brightness	400 cd/m², typical (adjustable)
MTBF	50000 h
Color spectrum	16.7 million colors
Reading angle left	88.00 °
Reading angle right	88.00 °
Reading angle top	88.00 °
Reading angle bottom	88.00 °

Interfaces

Interfaces	2x USB Host 2.0
	1x COM (RS-232/422/485)
Optional interfaces	Without optional interface
Network	1x Ethernet (10/100/1000 Mbps), RJ45
Bus system	without

System properties

User software	Visu+

System requirements

Runtime system	Visu+ Runtime

Electrical properties

Supply

Supply voltage	24 V DC
Supply voltage range	18 V ... 32 V
Power supply unit	24 V DC ±20 %
Max. current consumption	1.81 A (max. system configuration at 24 V DC)
Typical current consumption	0.9 A (max. system configuration at 24 V DC)

Real-time clock

Realtime clock	Integrated (battery backup)

Mounting

Mounting type	Front mounting

Material specifications

Material front plate	Aluminum (natural anodized)
Housing material	Aluminum cast alloy, powder-coated

Connection data

Connection method	Screw connection
Conductor cross section, rigid	0.2 mm² ... 2.5 mm²
Conductor cross section, flexible	0.2 mm² ... 2.5 mm²
Conductor cross section AWG	24 ... 12
Conductor cross section, flexible, with ferrule, with plastic sleeve	0.25 mm² ... 2.5 mm²
Conductor cross section flexible, with ferrule without plastic sleeve	0.25 mm² ... 2.5 mm²
Stripping length	7 mm

Environmental and real-life conditions

Ambient conditions

Degree of protection	IP66 (front), IP20 (back)
Ambient temperature (operation)	-20 °C ... 50 °C
Ambient temperature (storage/transport)	-25 °C ... 85 °C
Permissible humidity (operation)	5 % ... 85 % (non-condensing)
Permissible humidity (storage/transport)	5 % ... 85 % (non-condensing)
Vibration (operation)	1g

Dimensions

External dimensions

Width / Height / Depth	302 mm / 229 mm / 51 mm (Dimensions of the front plate)

Installation dimensions

Width / Height / Installation depth	292 mm / 219 mm / (Installation cutout)

Approvals

To download certificates, visit the product detail page: https://www.phoenixcontact.com/no/products/1190420

EAC
Approval ID: RU C-DE.A*08.B01708

IECEE CB Scheme
Approval ID: US-39088-UL

UL Listed
Approval ID: FILE E 238705

cUL Listed
Approval ID: FILE E 238705

IECEE CB Scheme
Approval ID: US-39088-UL

EAC
Approval ID: RU C-DE.A*08.B01708

cUL Listed
Approval ID: FILE E 238705

UL Listed
Approval ID: FILE E 238705

Classifications

ECLASS

ECLASS-11.0	27330201
ECLASS-12.0	27330201
ECLASS-13.0	27330201

ETIM

ETIM 9.0	EC001412

UNSPSC

UNSPSC 21.0	43211900

Environmental product compliance

EU RoHS

Fulfills EU RoHS substance requirements	Yes
Exemption	7(a), 7(c)-I

China RoHS

Environment friendly use period (EFUP)	EFUP-15
	An article-related China RoHS declaration table can be found in the download area for the respective article under "Manufacturer declaration". For all articles with EFUP-E, no China RoHS declaration table issued and required.

EU REACH SVHC

REACH candidate substance (CAS No.)	Lead(CAS: 7439-92-1)

Accessories

TP6/WP6/VL3 MOUNTING HW (2PCS) - Panel-mount flange

1289537

https://www.phoenixcontact.com/no/products/1289537

Mounting kit includes two retaining clips

TP/WP 6000 RTC BATTERY KIT - Battery

1289761

https://www.phoenixcontact.com/no/products/1289761

Replacement battery for TP 6000 and WP 6000 panels, and VL3 BPC/PPC/UPC.

MICROSDHC-16GB - Memory

1154696

https://www.phoenixcontact.com/no/products/1154696

Industrial grade 16 GB MicroSDHC 3DTLC

MICROSDHC-32GB - Memory

1154699

https://www.phoenixcontact.com/no/products/1154699

Industrial grade 32 GB MicroSDHC 3DTLC

TP 6121-WXPS - Touch panel

1190420

https://www.phoenixcontact.com/no/products/1190420

MSTB 2,5/ 3-STF-5,08 - PCB connector

1777992

https://www.phoenixcontact.com/no/products/1777992

PCB connector, nominal cross section: 2.5 mm^2, color: green, nominal current: 12 A, rated voltage (III/2): 320 V, contact surface: Tin, contact connection type: Socket, number of potentials: 3, number of rows: 1, number of positions: 3, number of connections: 3, product range: MSTB 2,5/..-STF, pitch: 5.08 mm, connection method: Screw connection with tension sleeve, screw head form: L Slotted, conductor/PCB connection direction: 0 °, locking clip: - without locking clip, plug-in system: COMBICON MSTB 2,5, locking: Screw locking mechanism, mounting: Screw flange, type of packaging: packed in cardboard

PHOENIX CONTACT AS
Strømsveien 344
N-1081 Oslo
+47 22 07 68 00
norge@phoenixcontact.com

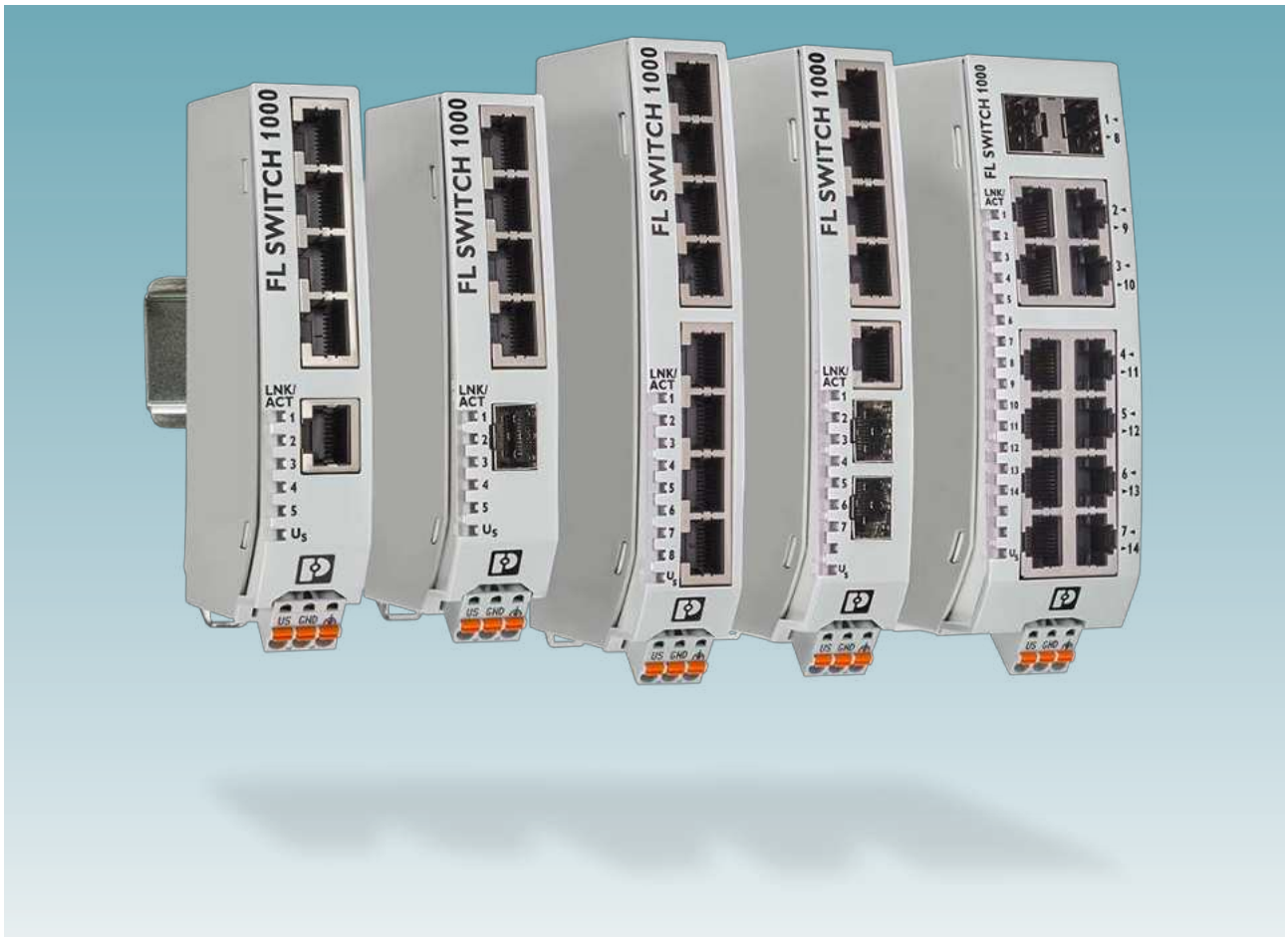

Unmanaged narrow Ethernet switches

User manual

UM EN FL SWITCH 1000

PHOENIX CONTACT
INSPIRING INNOVATIONS

User manual
Unmanaged narrow Ethernet switches

UM EN FL SWITCH 1000, Revision C 2024-05-14

This user manual is valid for:

Designation	Item No.	Designation	Item No.
FL SWITCH 1005N	1085039	FL SWITCH 1012NT-SFP	1249598
FL SWITCH 1008N	1085256	FL SWITCH 1024T	1343027
FL SWITCH 1105N	1085254	FL SWITCH 1116T	1085115
FL SWITCH 1108N	1085243	FL SWITCH 1104NT-2SFP	1343023
FL SWITCH 1016N	1085255	FL SWITCH 1105-2SFP	1343025
FL SWITCH 1116N	1085219	FL SWITCH 1108T	1085088
FL SWITCH 1004N-FX	1084159	FL SWITCH 1008T	1085094
FL SWITCH 1004N-FX ST	1085179	FL SWITCH 1000N-8POE	1343031
FL SWITCH 1004N-FX SM	1085214	FL SWITCH 1008NTC	1085156
FL SWITCH 1004N-SFX	1085177	FL SWITCH 1005NTC	1085161
FL SWITCH 1104N-SFP	1085173	FL SWITCH 1005N-28PK	1544302
FL SWITCH 1005N-2SFX	1085176	FL SWITCH 1100-5POE-2SFP	1342621
FL SWITCH 1105N-2SFP	1085171	FL SWITCH 1000-8POE	1342622
FL SWITCH 1108NT	1085162	FL SWITCH 1100-8POE	1343034
FL SWITCH 1105NT	1085163	FL SWITCH 1100T-8POE-2SFP	1467018
FL SWITCH 1006NT-2SFX	1085164		
FL SWITCH 1008NT	1085165		
FL SWITCH 1004NT-SFX	1085169		
FL SWITCH 1005NT	1085170		

4138_en_C

PHOENIX CONTACT GmbH & Co. KG • Flachsmarktstraße 8 • 32825 Blomberg • Germany
phoenixcontact.com

Table of contents

1 For your safety

Read this user manual carefully and keep it for future reference.

1.1 Labeling of warning notes

This symbol indicates hazards that could lead to personal injury.

There are three signal words indicating the severity of a potential injury.

DANGER
Indicates a hazard with a high risk level. If this hazardous situation is not avoided, it will result in death or serious injury.

WARNING
Indicates a hazard with a medium risk level. If this hazardous situation is not avoided, it could result in death or serious injury.

CAUTION
Indicates a hazard with a low risk level. If this hazardous situation is not avoided, it could result in minor or moderate injury.

This symbol together with the **NOTE** signal word warns the reader of actions that might cause property damage or a malfunction.

Here you will find additional information or detailed sources of information.

1.2 Qualification of users

The use of products described in this user manual is oriented exclusively to:

– Qualified electricians or persons instructed by them. The users must be familiar with the relevant safety concepts of automation technology as well as applicable standards and other regulations.
– Qualified application programmers and software engineers. The users must be familiar with the relevant safety concepts of automation technology as well as applicable standards and other regulations.

1.3 Product changes

Changes or modifications to hardware and software of the device are not permitted.

Incorrect operation or modifications to the device can endanger your safety or damage the device. Do not repair the device yourself. If the device is defective, please contact Phoenix Contact.

1.4 Security in the network

NOTE: Risk of unauthorized network access

Connecting devices to a network via Ethernet entails the danger of unauthorized access to the network.

To prevent unauthorized network access, please read the following notes:

- If possible, deactivate unused communication channels.
- Assign passwords such that third parties cannot access the device and make unauthorized changes.
- Due to its communication interfaces, the device should not be used in security-critical applications unless additional security appliances are used. Therefore, please take additional protective measures in accordance with the IT security requirements and the standards applicable to your application, e.g., virtual networks (VPN) for remote maintenance access, firewalls, etc., for protection against unauthorized network access.
- On first request, you shall release Phoenix Contact and the companies associated with Phoenix Contact GmbH & Co. KG, Flachsmarkstrasse 8, 32825 Blomberg, Germany in accordance with §§ 15 ff AktG (German Stock Corporation Act), hereinafter collectively referred to as “Phoenix Contact”, from all third-party claims made due to improper use.
- For the protection of networks for remote maintenance via VPN, Phoenix Contact offers the mGuard product series of security appliances; these are described in the latest Phoenix Contact catalog (phoenixcontact.net/products).
- Additional measures for protection against unauthorized network access are listed in the AH EN INDUSTRIAL SECURITY application note. The application note can be downloaded at phoenixcontact.net/products).

1.5 UL notes

WARNING:

This equipment is an open-type device meant to be installed in an enclosure suitable for the environment that is only accessible with the use of a tool.

This equipment is suitable for use in Class I, Division 2, Groups A, B, C, and D or non-hazardous locations only.

The wire temperature rating must be at least 105°C.

The equipment shall only be used in an area of not more than pollution degree 2, as defined in IEC/EN 60664-1.

If the equipment is used in a manner not specified, the protection provided by the equipment may be impaired.

The device must not be opened or modified.

Do not attempt to repair the device yourself but replace it with an equivalent device. Repairs may only be carried out by the manufacturer. The manufacturer is not liable for damage resulting from failure to comply.

2 Overview and ordering data

2.1 Descriptions

FL SWITCH product descriptions are coded to signify its configuration.

Figure 2-1 FL SWITCH nomenclature

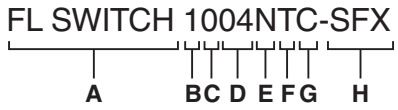

Table 2-1 Nomenclature key

Category	Indicator	Meaning
Product line	A	FL SWITCH
Management	B	1 = Unmanaged
Transfer speed	C	0 = 10/100 Mbps 1 = 1000 Mbps 6 = 10/100 Mbps IP67 7 = 1000 Mbps IP67
Number of RJ45 ports	D	As shown
Structure	E	N = Narrow form factor
Environment	F	T = Wide temperature
Coating	G	C = Conformal coating
Connections	H	ST = ST fiber optic connectors SC = SC fiber optic connectors LC = LC fiber optic connectors SFX = Port for small 10/100 Mbps form-factor modules SFP = Port for small 100/1000 Mbps form-factor modules POE = Ports for POE connection

FL SWITCH 10...N and FL SWITCH 11...N

The FL SWITCH 10...N and FL SWITCH 11...N Ethernet switches provide basic, cost-effective switch functions. They include automatic detection of data transmission rates and autocrossing with up to two fiber optic interfaces.

- Auto negotiation and autocrossing detection simplifies installation and setup
- Local diagnostic indicator LEDs
- RJ45 ports support a transmission speed of 10/100 Mbps on FL SWITCH 10... switches and 10/100/1000 Mbps on FL SWITCH 11... switches
- QoS prioritization support
- PROFINET conformance Class A for real-time data exchange
- Energy-efficient Ethernet in accordance with IEEE 802.3az
- PROFINET PTCP filter for reliable communication on PROFINET networks
- Enhanced traffic prioritization for automation protocols

FL SWITCH 10...NT and FL SWITCH 11...NT

The FL SWITCH 10...NT and FL SWITCH 11...NT Ethernet switches provide basic switch functions in a robust housing with expanded temperature and installation ranges. They include automatic detection of data transmission rates and autocrossing with up to two fiber optic interfaces.

- Auto negotiation and autocrossing detection simplifies installation and setup
- Local diagnostic indicator LEDs
- RJ45 ports support a transmission speed of 10/100 Mbps on FL SWITCH 10... switches and 10/100/1000 Mbps on FL SWITCH 11... switches
- QoS prioritization support
- PROFINET conformance Class A for real-time data exchange
- Energy-efficient Ethernet in accordance with IEEE 802.3az
- PROFINET PTCP filter for reliable communication on PROFINET networks
- Enhanced traffic prioritization for automation protocols

2.1.1 SFP module compatibility

Table 2-2 SFP module compatibility

Descriptor	Order No.	Compatible with	
		FL SWITCH 1...SFX	FL SWITCH 1...SFP
FL SFP FX	2891081	X	X
FL SFP FX SM	2891082	X	X
FL SFP FE WDM20 A/B	2702439	X	X
FL SFP SX	2891754		X
FL SFP SX2	2702397		X
FL SFP LX10-B	1025401		X
FL SFP LX40	1113081		X
FL SFP LX	2891767		X
FL SFP LH	2989912		X
FL SFP WDM10 A/B	2702442		X
FL SFP GT	2989420		X
FL SFP WDM10-A	2702440		
FL SFP WDM10-B	2702441		
FL SFP FE WDM20-A	2702437		
FL SFP FE WDM20-B	2702438		

2.2 Ordering data

Description	Type	Order No.	Pcs./Pkt
Industrial Ethernet switch, five RJ45 ports with 10/100 Mbps, automatic speed detection, autocrossing, QoS	FL SWITCH 1005N	1085039	1
Industrial Ethernet switch, eight RJ45 ports with 10/100 Mbps, automatic speed detection, autocrossing, QoS	FL SWITCH 1008N	1085256	1
Industrial Ethernet switch, five RJ45 ports with 10/100/1000 Mbps, automatic speed detection, auto-crossing, QoS	FL SWITCH 1105N	1085254	1
Industrial Ethernet switch eight RJ45 ports with 10/100/1000 Mbps, automatic speed detection, auto-crossing, QoS	FL SWITCH 1108N	1085243	1
Industrial Ethernet switch, 16 RJ45 ports with 10/100 Mbps, automatic speed detection, autocrossing, QoS	FL SWITCH 1016N	1085255	1
Industrial Ethernet switch, sixteen RJ45 ports with 10/100/1000 Mbps, automatic speed detection, auto-crossing, QoS	FL SWITCH 1116N	1085219	1

Description [...]	Type	Order No.	Pcs./Pkt
Industrial Ethernet switch, four RJ45 ports with 10/100 Mbps, one SC-D fiber optic port with 100 Mbps, automatic speed detection, autocrossing, QoS	FL SWITCH 1004N-FX	1084159	1
Industrial Ethernet switch, four RJ45 ports with 10/100 Mbps, one ST fiber optic port with 100 Mbps, automatic speed detection, autocrossing, QoS	FL SWITCH 1004N-FX ST	1085179	1
Industrial Ethernet switch, four RJ45 ports with 10/100 Mbps, one SC fiber optic port with 100 Mbps, automatic speed detection, autocrossing, QoS	FL SWITCH 1004N-FX SM	1085214	1
Industrial Ethernet switch, four RJ45 ports with 10/100 Mbps, one SFP port with 100 Mbps, automatic speed detection, autocrossing, QoS	FL SWITCH 1004N-SFX	1085177	1
Industrial Ethernet switch, four RJ45 ports with 10/100/1000 Mbps, one SFP port with 100/1000 Mbps, automatic speed detection, autocrossing, QoS	FL SWITCH 1104N-SFP	1085173	1
Industrial Ethernet switch, five RJ45 ports with 10/100 Mbps, two SFP ports with 100 Mbps, automatic speed detection, autocrossing, QoS	FL SWITCH 1005N-2SFX	1085176	1
Industrial Ethernet switch, five RJ45 ports with 10/100/1000 Mbps, two SFP ports with 100/1000 Mbps, automatic speed detection, autocrossing, QoS	FL SWITCH 1105N-2SFP	1085171	1
Industrial Ethernet switch, eight RJ45 ports with 10/100/1000 Mbps, automatic speed detection, autocrossing, QoS, wide temperature range	FL SWITCH 1108NT	1085162	1
Industrial Ethernet switch, five RJ45 ports with 10/100/1000 Mbps, automatic speed detection, autocrossing, QoS, wide temperature range	FL SWITCH 1105NT	1085163	1
Industrial Ethernet switch, five RJ45 ports with 10/100 Mbps, two SFP ports with 100 Mbps, automatic speed detection, autocrossing, QoS, wide temperature range	FL SWITCH 1006NT-2SFX	1085164	1
Industrial Ethernet switch, eight RJ45 ports with 10/100/1000 Mbps, automatic speed detection, autocrossing, QoS, wide temperature range	FL SWITCH 1008NT	1085165	1
Industrial Ethernet switch, four RJ45 ports with 10/100 Mbps, one SFP ports with 100 Mbps, automatic speed detection, autocrossing, QoS, wide temperature range	FL SWITCH 1004NT-SFX	1085169	1
Industrial Ethernet switch, five RJ45 ports with 10/100/1000 Mbps, automatic speed detection, autocrossing, QoS, wide temperature range	FL SWITCH 1005NT	1085170	1
Industrial Ethernet switch, twelve RJ45 ports with 10/100 Mbps, two SFP ports with 100/1000 Mbps, automatic speed detection, autocrossing, QoS, wide temperature range	FL SWITCH 1012NT-2SFP	1249598	1

Description [...]	Type	Order No.	Pcs./Pkt
Industrial Ethernet switch, 24 RJ45 ports with 10/100 Mbps, automatic speed detection, autocrossing, QoS, wide temperature range	FL SWITCH 1024T	1343027	1
Industrial Ethernet switch, four RJ45 ports with 10/100/1000 Mbps, one SFP ports with 100/1000 Mbps, automatic speed detection, autocrossing, QoS, wide temperature range	FL SWITCH 1104NT-SFP	1343023	1
Industrial Ethernet switch, five RJ45 ports with 10/100/1000 Mbps, two SFP ports with 100/1000 Mbps, automatic speed detection, autocrossing, QoS, wide temperature range	FL SWITCH 1105NT-2SFP	1343025	1
Industrial Ethernet switch, 16 RJ45 ports with 10/100/1000 Mbps, automatic speed detection, autocrossing, QoS, wide temperature range	FL SWITCH 1116T	1085115	1
Industrial Ethernet switch, eight RJ45 ports with 10/100/1000 Mbps, automatic speed detection, autocrossing, QoS, wide temperature range	FL SWITCH 1108T	1085088	1
Industrial Ethernet switch, eight RJ45 ports with 10/100 Mbps, automatic speed detection, autocrossing, QoS, wide temperature range	FL SWITCH 1008T	1085094	1
PoE+ Narrow industrial Ethernet switch, eight RJ45 ports with 10/100 Mbps, automatic speed detection, autocrossing, QoS	FL SWITCH 1000N-8POE	1343031	1
Narrow industrial Ethernet switch, eight RJ45 ports with 10/100 Mbps, automatic speed detection, autocrossing, QoS, wide temperature range, conformal coated	FL SWITCH 1008NTC	1085156	1
Narrow industrial Ethernet switch, five RJ45 ports with 10/100 Mbps, automatic speed detection, autocrossing, QoS, wide temperature range, conformal coated	FL SWITCH 1005NTC	1085161	1
Pack of 28 narrow industrial Ethernet switches, with five RJ45 ports with 10/100 Mbps, automatic speed detection, autocrossing, QoS	FL SWITCH 1005N-28PK	1544302	1
PoE+ industrial Ethernet switch, five RJ45 ports with 10/100/1000 Mbps, two SFP ports with 100/1000 Mbps, automatic speed detection, autocrossing, QoS	FL SWITCH 1100-5POE-2SFP	1342621	1
PoE+ industrial Ethernet switch, eight RJ45 ports with 10/100 Mbps, automatic speed detection, autocrossing, QoS	FL SWITCH 1000-8POE	1342622	1
PoE+ industrial Ethernet switch, eight RJ45 ports with 10/100/1000 Mbps, automatic speed detection, autocrossing, QoS	FL SWITCH 1100-8POE	1343034	1
PoE+ industrial Ethernet switch, eight RJ45 ports with 10/100/1000 Mbps, two SFP ports with 100/1000 Mbps, automatic speed detection, autocrossing, QoS, wide temperature range	FL SWITCH 1100T-8POE-2SFP	1467018	1

Accessories			
Description	**Type**	**Order No.**	**Pcs./Pkt.**
Mounting plate	FL DIN-RAIL ADAPTER 22.5	1085485	1
Mounting plate	FL PANEL ADAPTER 22.5	1085488	1
Mounting plate	FL DIN-RAIL ADAPTER 40	1085484	1
Mounting plate	FL PANEL ADAPTER 40	1085486	1
Patch cable	NBC-R4AC-R4AC-IE8A/.../...	1411854	1
Patch cable	NBC-R4AC/10G-R4AC/10G-94F/2.0	1408360	1
Patch cable	NBC-R4AC/10G-R4AC/10G-94F/3.0	1408365	1
Patch cable	NBC-R4AC/1,0-93B/R4AC	1408968	1
Patch cable	NBC-R4AC/2,0-93B/R4AC	1408969	1
Patch cable	NBC-R4AC/5,0-93B/R4AC	1408970	1
Patch cable, FO, 1 m	FOC-LC:PA-SC:PA-OM2:D01/1	1115607	1
Patch cable, FO, 2 m	FOC-LC:PA-SC:PA-OM2:D01/2	1115605	1
Patch cable, FO, 1 m	FOC-LC:PA-LC:PA-OM2:D01/1	1115633	1
Patch cable, FO, 2 m	FOC-LC:PA-LC:PA-OM2:D01/2	1115634	1
Patch cable, fiber optic, 1 m	FOC-LC:PA-ST:PA-OM2:D01/1	1115588	1
Patch cable, fiber optic, 2 m	FOC-LC:PA-ST:PA-OM2:D01/2	1115587	1
Patch cable, FO, 1 m	FOC-LC:PA-SC:PA-OM4:D01/1	1115601	1
Patch cable, FO, 2 m	FOC-LC:PA-SC:PA-OM4:D01/2	1115600	1
Patch cable, FO, 1 m	FOC-LC:PA-LC:PA-OM4:D01/1	1115625	1
Patch cable, FO, 2 m	FOC-LC:PA-LC:PA-OM4:D01/2	1115624	1
Patch cable, FO, 1 m	FOC-LC:PA-LC:PA-OS2:D01/1	1115636	1
Patch cable, FO, 2 m	FOC-LC:PA-LC:PA-OS2:D01/2	1115629	1
Patch cable, FO, 1 m	FOC-LC:PA-ST:PA-OS2:D01/1	1115596	1
Patch cable, FO, 2 m	FOC-LC:PA-ST:PA-OS2:D01/2	1115595	1

Accessories [...]			
Description	**Type**	**Order No.**	**Pcs./Pkt.**
Patch cable, FO, 1 m	FOC-LC:PA-SC:PA-OS2:D01/1	1115618	1
Patch cable, FO, 2 m	FOC-LC:PA-SC:PA-OS2:D01/2	1115617	1
End clamp	E/NS 35 N	0800886	1
Patch cable	FL CAT5 PATCH 0.5	2832263	1
Patch cable	FL CAT5 PATCH 1.0	2832276	1
Patch cable	FL CAT5 PATCH 2.0	2832289	1
PCB connector	FKCT 2.5/3-ST KMGY BD:US, GND	1087544	1
PCB connector	FKCT 2.5/3-ST KMGY	1998263	1
Dust protection	FL RJ45 PROTECT CAP	2832991	1
Surge protection device	DT-LAN-CAT .6+	2881007	1

Visit phoenixcontact.net/products for available accessories

3 Installation

3.1 DIN rail

3.1.1 Mounting

Place the module on a grounded DIN rail from above using the slot (A). Push the front of the module toward the mounting surface until it audibly snaps into place (B).

Figure 3-1 DIN rail installation

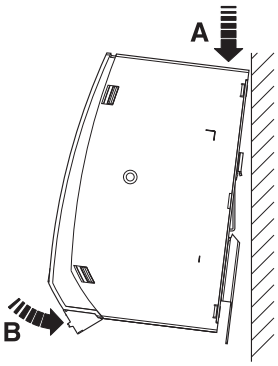

3.1.2 Removal

Insert a suitable tool into the latch of the holding clamp and pull the latch downward by pushing the tool upward (A). Pull out the lower edge (B) and then remove the module from the rail.

Figure 3-2 Removal

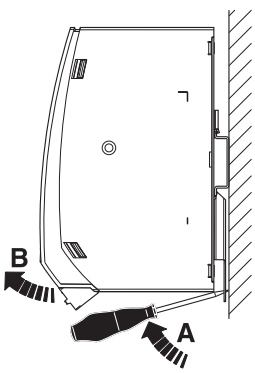

3.2 Power

WARNING:
This device is designed for SELV and PELV operation according to IEC 61140/ EN 61140.

The switch connects to a single power source through a removable COMBICON connector.

Snapping the switch onto a grounded rail connects it to the ground potential.

Protective ground is through the DIN rail.

In an environment particularly prone to EMI, noise immunity can be increased by an additional low-impedance connection to functional earth ground.

Table 3-1 Current rating

Order No.	Designation	Maximum current	Typical current
1085039	FL SWITCH 1005N	110 mA	19 mA
1085256	FL SWITCH 1008N	173 mA	28 mA
1085254	FL SWITCH 1105N	311 mA	38 mA
1085243	FL SWITCH 1108N	452 mA	54 mA
1085255	FL SWITCH 1016N	266 mA	68 mA
1085219	FL SWITCH 1116N	925 mA	195 mA
1084159	FL SWITCH 1004N-FX	230 mA	59 mA
1085179	FL SWITCH 1004N-FX ST	230 mA	60 mA
1085214	FL SWITCH 1004N-FX SM	196 mA	51 mA
1085177	FL SWITCH 1004N-SFX	162 mA	21 mA
1085173	FL SWITCH 1004N-SFP	474 mA	48 mA
1085176	FL SWITCH 1005N-2SFX	252 mA	25 mA
1085171	FL SWITCH 1005N-2SFP	681 mA	30 mA
1085162	FL SWITCH 1108NT	435 mA	18 mA
1085163	FL SWITCH 1105NT	335 mA	34 mA
1085164	FL SWITCH 1006NT-2SFX	310 mA	25 mA
1085165	FL SWITCH 1008NT	170 mA	26 mA
1085169	FL SWITCH 1004NT-SFX	215 mA	21 mA
1085170	FL SWITCH 1005NT	115 mA	21 mA
1249598	FL SWITCH 1012NT-2SFP	480 mA	125 mA
1343027	FL SWITCH 1024T	370 mA	56 mA
1085115	FL SWITCH 1116T	938 mA	191 mA
1343023	FL SWITCH 1104NT-2SFP	425 mA	47 mA
1343025	FL SWITCH 1105-2SFX	560 mA	33 mA
1085088	FL SWITCH 1108T	170 mA	55 mA
1085094	FL SWITCH 1008T	460 mA	36 mA
1343031	FL SWITCH 1000N-8POE	7 A	95 mA

Table 3-1 Current rating [...]

Order No.	Designation	Maximum current	Typical current
1085156	FL SWITCH 1008NTC	170 mA	72 mA
1085161	FL SWITCH 1005NTC	153 mA	55 mA
1544302	FL SWITCH 1005N-28PK		
1342621	FL SWITCH 1100-5POE-2SFP	7 A	97 mA
1342622	FL SWITCH 1000-8POE	6 A	58 mA
1343034	FL SWITCH 1100-8POE	5.5 A	59 mA
1467018	FL SWITCH 1100T-8POE-2SFP	7.1 A	157 mA

3.2.1 Derating

FL SWITCH 10...N and FL SWITCH 11...N

Figure 3-3 Horizontal DIN rail clearance

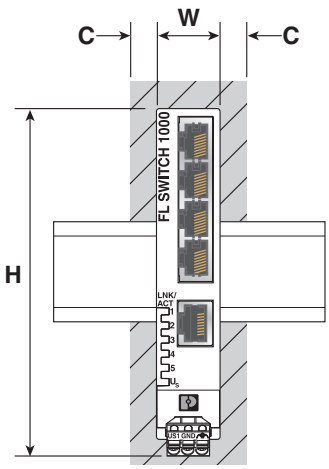

When installed on a horizontal rail, the Ethernet switches may be mounted immediately next to one another without derating the temperature (c ≥ 0 mm).

Figure 3-4 Vertical DIN rail clearance

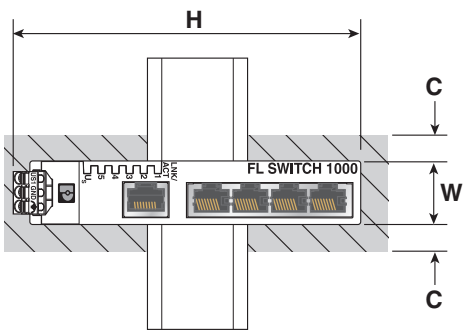

When installed on a vertical rail, the Ethernet switches may be mounted immediately next to one another. However, the maximum temperature must be reduced by 5°C (c = 0 mm). See “Technical data” on page 21 for maximum temperature rating.

FL SWITCH 10...NT and FL SWITCH 11...NT

When installed on a horizontal rail, the Ethernet switches may be mounted immediately next to one another without derating the temperature (c ≥ 0 mm).

When installed on a vertical rail, the Ethernet switches may be mounted immediately next to one another. However, the maximum temperature must be reduced by 5°C (c = 0 mm). See "Technical data" on page 21 for maximum temperature rating.

FL SWITCH 10...POE and FL SWITCH 11...POE

Devices are not rated for vertical mounting.

4 Operation

4.1 Diagnostic and status indicators

A Link/ACT LED corresponding to the port number indicates the status of that port.

Table 4-1 LED indicators

Ports			
	Link/ACT	On	Link established and network available
		Flashing	Data transmission active
		Off	No link established. Network not communicating.
	PoE	On	PoE power is present
		Off	PoE power is not present
Switch LED			
	U_S	On	Power is present
		Off	Power is not present

4.2 SFP modules

SFP ports are rated at 100 Mbps (FL SWITCH…SFX…) or 100/1000 Mbps (FL SWITCH…SFP…).

The listed Ethernet switches (see “SFP module compatibility” on page 9) provide 3.3 V DC to power the SFP module.

Installed SFP modules must have an insulation material rating of V-2 and be a Class 1 laser product.

4.3 Switch cascading

When cascading switches, it is recommended to not utilize the same port, for example, X5 on Switch A and X5 on Switch B, due to the switch chip configuration and timing of the auto-negotiation boot sequence. Issues can be avoided by utilizing different ports, for example, X1 on switch A and X2 on switch B.

5 Technical data

5.1 FL SWITCH 1005N (Order No. 1085039)

Dimensions (nominal sizes in mm)	
Width	22.5 mm
Height	117 mm
Depth	84 mm

Ambient conditions	
Degree of protection	IP30
Ambient temperature (operation)	-10°C ... 60°C
Ambient temperature (storage/transport)	-40°C ... 85°C
Permissible humidity (operation)	5% ... 95% (non-condensing)
Permissible humidity (storage/transport)	5% ... 95% (non-condensing)
Air pressure (operation)	79 kPa ... 108 kPa up to 2000 m above mean sea level (Without derating)
Air pressure (storage/transport)	79 kPa ... 108 kPa up to 2000 m above mean sea level (Without derating)
Free from substances that could impair the application of coating	In acc. with VW specification

General data	
Mounting type	DIN rail
Weight	129.9 g
Housing material	Polycarbonate fiber reinforced
MAC address table	2k
MTTF	167.2 Years (MIL-HDBK-217F standard, temperature 25°C, operating cycle 100%)
MTTF	1627 Years (SN 29500 standard, temperature 25°C, operating cycle 21%)
MTTF	1526 Years (Telcordia standard, 25°C temperature, 21% operating cycle (5 days a week, 8 hours a day))

Connection data	
Connection method	Push-in spring connection
Pluggable	Yes
Conductor cross section solid min.	0.2 mm²
Conductor cross section solid max.	2.5 mm²
Conductor cross section flexible min.	0.2 mm²
Conductor cross section flexible max.	2.5 mm²
Conductor cross section AWG min.	24
Conductor cross section AWG max.	12
Stripping length	10 mm

Interface: Ethernet (RJ45)	
Number of interfaces	5
Connection method	RJ45
Note on the connection method	Auto negotiation and autocrossing
Transmission physics	Ethernet in RJ45 twisted pair
Transmission speed	10/100 Mbps
Transmission length	100 m (per segment)

Supply voltage	
Supply voltage	24 V DC
Residual ripple	3.6 V_{PP} (within the permitted voltage range)
Supply voltage range	9 V DC ... 32 V DC
Typical current consumption	19 mA
Max. current consumption	110 mA

Mechanical tests	
Mechanical tests	Free fall in accordance with EN 61131-2
Vibration (operation)	in acc. with IEC 60068-2-6: 5g, 150 Hz
Vibration (storage/transport)	in acc. with IEC 60068-2-6: 5g, 150 Hz
Shock (operation)	30g (EN 60068-2-27)

Conformity with EMC directives	
Electromagnetic compatibility	Conformance with EMC Directive 2014/30/EU
Conducted noise emission	EN 61000-6-2 EN 55032 Class A
Interference emission	EN 61000-6-2 EN 61000-4-8 (electromagnetic fields) Criterion A
Immunity to burst	EN 61000-6-2 EN 61000-4-4 (EFT burst) Criterion A
Immunity to EF	EN 61000-6-2 EN 61000-4-3 (electromagnetic fields) Criterion A

Conformity with EMC directives	
Immunity to ESD	EN 61000-6-2 EN 61000-4-2 (ESD) Criterion B
Immunity to surge	EN 61000-6-2 EN 61000-4-5 (surge) Criterion B
Immunity to conducted interference	EN 61000-6-2 EN 61000-4-6 (line noise immunity) Criterion A

Approvals/Certificates	
UL, USA/Canada	UL 61010-1, UL 61010-2-201 Class I, Div. 2, Groups A, B, C, D, T4 Class I, Zone 2, Group IIC, T4
Further approvals	cUL Listed, EAC, KC, UL Listed, IECEE CB Scheme

5.2 FL SWITCH 1008N (Order No. 1085256)

Dimensions (nominal sizes in mm)	
Width	22.5 mm
Height	140.4 mm
Depth	92.4 mm

Ambient conditions	
Degree of protection	IP30
Ambient temperature (operation)	-10°C ... 60°C
Ambient temperature (storage/transport)	-40°C ... 85°C
Permissible humidity (operation)	5% ... 95% (non-condensing)
Permissible humidity (storage/transport)	5% ... 95% (non-condensing)
Air pressure (operation)	79 kPa ... 108 kPa up to 2000 m above mean sea level (Without derating)
Air pressure (storage/transport)	79 kPa ... 108 kPa up to 2000 m above mean sea level (Without derating)

General data	
Mounting type	DIN rail
Weight	173.2 g
Housing material	Polycarbonate fiber reinforced
MAC address table	2k
MTTF	133.9 Years (MIL-HDBK-217F standard, temperature 25°C, operating cycle 100%)
MTTF	1254 Years (SN 29500 standard, temperature 25°C, operating cycle 21%)
MTTF	1196 Years (Telcordia standard, 25°C temperature, 21% operating cycle (5 days a week, 8 hours a day))

Connection data	
Connection method	Push-in spring connection
Pluggable	Yes
Conductor cross section solid min.	0.2 mm²
Conductor cross section solid max.	2.5 mm²
Conductor cross section flexible min.	0.2 mm²
Conductor cross section flexible max.	2.5 mm²
Conductor cross section AWG min.	24
Conductor cross section AWG max.	12
Stripping length	10 mm

Interface: Ethernet (RJ45)	
Number of interfaces	8
Connection method	RJ45
Note on the connection method	Auto negotiation and autocrossing
Transmission physics	Ethernet in RJ45 twisted pair
Transmission speed	10/100 Mbps
Transmission length	100 m (per segment)

Supply voltage	
Supply voltage	24 V
Residual ripple	3.6 V_{PP} (within the permitted voltage range)
Supply voltage range	9 V DC ... 32 V DC
Typical current consumption	28 mA
Max. current consumption	173 mA

Mechanical tests	
Mechanical tests	Free fall in accordance with EN 61131-2
Vibration (operation)	in acc. with IEC 60068-2-6: 5g, 150 Hz
Vibration (storage/transport)	in acc. with IEC 60068-2-6: 5g, 150 Hz
Shock (operation)	30g (EN 60068-2-27)

Conformity with EMC directives	
Electromagnetic compatibility	Conformance with EMC Directive 2014/30/EU
Conducted noise emission	EN 61000-6-2 EN 55032 Class A
Interference emission	EN 61000-6-2 EN 61000-4-8 (electromagnetic fields) Criterion A
Immunity to burst	EN 61000-6-2 EN 61000-4-4 (EFT burst) Criterion A
Immunity to EF	EN 61000-6-2 EN 61000-4-3 (electromagnetic fields) Criterion A

Conformity with EMC directives	
Immunity to ESD	EN 61000-6-2 EN 61000-4-2 (ESD) Criterion B
Immunity to surge	EN 61000-6-2 EN 61000-4-5 (surge) Criterion B
Immunity to conducted interference	EN 61000-6-2 EN 61000-4-6 (line noise immunity) Criterion A

Approvals/Certificates	
UL, USA/Canada	UL 61010-1, UL 61010-2-201 Class I, Div. 2, Groups A, B, C, D, T4 Class I, Zone 2, Group IIC, T4
Further approvals	cUL Listed, EAC, KC, UL Listed, IECEE CB Scheme

5.3 FL SWITCH 1105N (Order No. 1085254)

Dimensions (nominal sizes in mm)	
Width	22.5 mm
Height	117 mm
Depth	84 mm

Ambient conditions	
Degree of protection	IP30
Ambient temperature (operation)	-10°C ... 60°C
Ambient temperature (storage/transport)	-40°C ... 85°C
Permissible humidity (operation)	5% ... 95% (non-condensing)
Permissible humidity (storage/transport)	5% ... 95% (non-condensing)
Air pressure (operation)	79 kPa ... 108 kPa up to 2000 m above mean sea level (Without derating)
Air pressure (storage/transport)	79 kPa ... 108 kPa up to 2000 m above mean sea level (Without derating)

General data	
Mounting type	DIN rail
Weight	135.1 g
Housing material	Polycarbonate fiber reinforced
MAC address table	2k
MTTF	87.5 Years (MIL-HDBK-217F standard, temperature 25°C, operating cycle 100%)
MTTF	1058 Years (SN 29500 standard, temperature 25°C, operating cycle 21%)
MTTF	951 Years (Telcordia standard, 25°C temperature, 21% operating cycle (5 days a week, 8 hours a day))

Connection data	
Connection method	Push-in spring connection
Pluggable	Yes
Conductor cross section solid min.	0.2 mm²
Conductor cross section solid max.	2.5 mm²
Conductor cross section flexible min.	0.2 mm²
Conductor cross section flexible max.	2.5 mm²
Conductor cross section AWG min.	24
Conductor cross section AWG max.	12
Stripping length	10 mm

Interface: Ethernet (RJ45)	
Number of interfaces	5
Connection method	RJ45
Note on the connection method	Auto negotiation and autocrossing
Transmission physics	Ethernet in RJ45 twisted pair
Transmission speed	10/100/1000 Mbps
Transmission length	100 m (per segment)

Supply voltage	
Supply voltage	24 V
Residual ripple	3.6 V_{PP} (within the permitted voltage range)
Supply voltage range	9 V DC ... 32 V DC
Typical current consumption	38 mA
Max. current consumption	311 mA

Mechanical tests	
Mechanical tests	Free fall in accordance with EN 61131-2
Vibration (operation)	in acc. with IEC 60068-2-6: 5g, 150 Hz
Vibration (storage/transport)	in acc. with IEC 60068-2-6: 5g, 150 Hz
Shock (operation)	30g (EN 60068-2-27)

Conformity with EMC directives	
Electromagnetic compatibility	Conformance with EMC Directive 2014/30/EU
Conducted noise emission	EN 61000-6-2 EN 55032 Class A
Interference emission	EN 61000-6-2 EN 61000-4-8 (electromagnetic fields) Criterion A
Immunity to burst	EN 61000-6-2 EN 61000-4-4 (EFT burst) Criterion A
Immunity to EF	EN 61000-6-2 EN 61000-4-3 (electromagnetic fields) Criterion A

Conformity with EMC directives	
Immunity to ESD	EN 61000-6-2 EN 61000-4-2 (ESD) Criterion B
Immunity to surge	EN 61000-6-2 EN 61000-4-5 (surge) Criterion B
Immunity to conducted interference	EN 61000-6-2 EN 61000-4-6 (line noise immunity) Criterion A

Approvals/Certificates	
UL, USA	UL 61010-1
UL, USA/Canada	Class I, Div. 2, Groups A, B, C, D T4 Class I, Zone 2, IIC T4
Further approvals	cUL Listed, EAC, KC, UL Listed, CC-Link IE Field, IECEE CB Scheme

5.4 FL SWITCH 1108N (Order No. 1085243)

Dimensions (nominal sizes in mm)	
Width	22.5 mm
Height	140.4 mm
Depth	92.4 mm

Ambient conditions	
Degree of protection	IP30
Ambient temperature (operation)	-10°C ... 60°C
Ambient temperature (storage/transport)	-40°C ... 85°C
Permissible humidity (operation)	5% ... 95% (non-condensing)
Permissible humidity (storage/transport)	5% ... 95% (non-condensing)
Air pressure (operation)	79 kPa ... 108 kPa up to 2000 m above mean sea level (Without derating)
Air pressure (storage/transport)	79 kPa ... 108 kPa up to 2000 m above mean sea level (Without derating)

General data	
Mounting type	DIN rail
Weight	179.2 g
Housing material	Polycarbonate fiber reinforced
MAC address table	4k
MTTF	66.1 Years (MIL-HDBK-217F standard, temperature 25°C, operating cycle 100%)
MTTF	786 Years (SN 29500 standard, temperature 25°C, operating cycle 21%)
MTTF	709 Years (Telcordia standard, 25°C temperature, 21% operating cycle (5 days a week, 8 hours a day))

Connection data	
Connection method	Push-in spring connection
Pluggable	Yes
Conductor cross section solid min.	0.2 mm²
Conductor cross section solid max.	2.5 mm²
Conductor cross section flexible min.	0.2 mm²
Conductor cross section flexible max.	2.5 mm²
Conductor cross section AWG min.	24
Conductor cross section AWG max.	12
Stripping length	10 mm

Interface: Ethernet (RJ45)	
Number of interfaces	8
Connection method	RJ45
Note on the connection method	Auto negotiation and autocrossing
Transmission physics	Ethernet in RJ45 twisted pair
Transmission speed	10/100/1000 Mbps
Transmission length	100 m (per segment)

Supply voltage	
Supply voltage	24 V
Residual ripple	3.6 V_{PP} (within the permitted voltage range)
Supply voltage range	9 V DC ... 32 V DC
Typical current consumption	54 mA
Max. current consumption	452 mA

Mechanical tests	
Mechanical tests	Free fall in accordance with EN 61131-2
Vibration (operation)	in acc. with IEC 60068-2-6: 5g, 150 Hz
Vibration (storage/transport)	in acc. with IEC 60068-2-6: 5g, 150 Hz
Shock (operation)	30g (EN 60068-2-27)

Conformity with EMC directives	
Electromagnetic compatibility	Conformance with EMC Directive 2014/30/EU
Conducted noise emission	EN 61000-6-2 EN 55032 Class A
Interference emission	EN 61000-6-2 EN 61000-4-8 (electromagnetic fields) Criterion A
Immunity to burst	EN 61000-6-2 EN 61000-4-4 (EFT burst) Criterion A
Immunity to EF	EN 61000-6-2 EN 61000-4-3 (electromagnetic fields) Criterion A

Conformity with EMC directives	
Immunity to ESD	EN 61000-6-2 EN 61000-4-2 (ESD) Criterion B
Immunity to surge	EN 61000-6-2 EN 61000-4-5 (surge) Criterion B
Immunity to conducted interference	EN 61000-6-2 EN 61000-4-6 (line noise immunity) Criterion A

Approvals/Certificates	
UL, USA/Canada	UL 61010-1, UL 61010-2-201 Class I, Div. 2, Groups A, B, C, D, T4 Class I, Zone 2, Group IIC, T4
Further approvals	cUL Listed, EAC, KC, UL Listed, IECEE CB Scheme

5.5 FL SWITCH 1016N (Order No. 1085255)

Dimensions (nominal sizes in mm)	
Width	40 mm
Height	140.4 mm
Depth	92.4 mm

Ambient conditions	
Degree of protection	IP30
Ambient temperature (operation)	-10°C ... 60°C
Ambient temperature (storage/transport)	-40°C ... 85°C
Permissible humidity (operation)	5% ... 95% (non-condensing)
Permissible humidity (storage/transport)	5% ... 95% (non-condensing)
Air pressure (operation)	79 kPa ... 108 kPa up to 2000 m above mean sea level (Without derating)
Air pressure (storage/transport)	79 kPa ... 108 kPa up to 2000 m above mean sea level (Without derating)

General data	
Mounting type	DIN rail
Weight	265.9 g
Housing material	Polycarbonate fiber reinforced
MAC address table	8k
MTTF	63.7 Years (MIL-HDBK-217F standard, temperature 25°C, operating cycle 100%)
MTTF	729 Years (SN 29500 standard, temperature 25°C, operating cycle 21%)
MTTF	639 Years (Telcordia standard, 25°C temperature, 21% operating cycle (5 days a week, 8 hours a day))

Connection data	
Connection method	Push-in spring connection
Pluggable	Yes
Conductor cross section solid min.	0.2 mm²
Conductor cross section solid max.	2.5 mm²
Conductor cross section flexible min.	0.2 mm²
Conductor cross section flexible max.	2.5 mm²
Conductor cross section AWG min.	24
Conductor cross section AWG max.	12
Stripping length	10 mm

Interface: Ethernet (RJ45)	
Number of interfaces	16
Connection method	RJ45
Note on the connection method	Auto negotiation and autocrossing
Transmission physics	Ethernet in RJ45 twisted pair
Transmission speed	10/100 Mbps
Transmission length	100 m (per segment)

Supply voltage	
Supply voltage	24 V
Residual ripple	3.6 V_{PP} (within the permitted voltage range)
Supply voltage range	9 V DC ... 32 V DC
Typical current consumption	68 mA
Max. current consumption	266 mA

Mechanical tests	
Mechanical tests	Free fall in accordance with EN 61131-2
Vibration (operation)	in acc. with IEC 60068-2-6: 5g, 150 Hz
Vibration (storage/transport)	in acc. with IEC 60068-2-6: 5g, 150 Hz
Shock (operation)	30g (EN 60068-2-27)

Conformity with EMC directives	
Electromagnetic compatibility	Conformance with EMC Directive 2014/30/EU
Conducted noise emission	EN 61000-6-2 EN 55032 Class A
Interference emission	EN 61000-6-2 EN 61000-4-8 (electromagnetic fields) Criterion A
Immunity to burst	EN 61000-6-2 EN 61000-4-4 (EFT burst) Criterion A
Immunity to EF	EN 61000-6-2 EN 61000-4-3 (electromagnetic fields) Criterion A

Conformity with EMC directives	
Immunity to ESD	EN 61000-6-2 EN 61000-4-2 (ESD) Criterion B
Immunity to surge	EN 61000-6-2 EN 61000-4-5 (surge) Criterion B
Immunity to conducted interference	EN 61000-6-2 EN 61000-4-6 (line noise immunity) Criterion A

Approvals/Certificates	
UL, USA/Canada	UL 61010-1, UL 61010-2-201 Class I, Div. 2, Groups A, B, C, D, T4 Class I, Zone 2, Group IIC, T4
Further approvals	cUL Listed, EAC, KC, UL Listed, IECEE CB Scheme

5.6 FL SWITCH 1116N (Order No. 1085219)

Dimensions (nominal sizes in mm)	
Width	40 mm
Height	151 mm
Depth	98 mm

Ambient conditions	
Degree of protection	IP30
Ambient temperature (operation)	-10°C ... 60°C
Ambient temperature (storage/transport)	-40°C ... 85°C
Permissible humidity (operation)	5% ... 95% (non-condensing)
Permissible humidity (storage/transport)	5% ... 95% (non-condensing)
Air pressure (operation)	79 kPa ... 108 kPa up to 2000 m above mean sea level (Without derating)
Air pressure (storage/transport)	79 kPa ... 108 kPa up to 2000 m above mean sea level (Without derating)

General data	
Mounting type	DIN rail
Weight	455 g
Housing material	Polycarbonate fiber reinforced
MAC address table	8k
MTTF	77.4 Years (MIL-HDBK-217F standard, temperature 25°C, operating cycle 100%)
MTTF	833.6 Years (SN 29500 standard, temperature 25°C, operating cycle 21%)
MTTF	616.1 Years (Telcordia standard, 25°C temperature, 21% operating cycle (5 days a week, 8 hours a day))

Connection data	
Connection method	Push-in spring connection
Pluggable	Yes
Conductor cross section solid min.	0.2 mm²
Conductor cross section solid max.	2.5 mm²
Conductor cross section flexible min.	0.2 mm²
Conductor cross section flexible max.	2.5 mm²
Conductor cross section AWG min.	24
Conductor cross section AWG max.	12
Stripping length	10 mm

Interface: Ethernet (RJ45)	
Number of interfaces	16
Connection method	RJ45
Note on the connection method	Auto negotiation and autocrossing
Transmission physics	Ethernet in RJ45 twisted pair
Transmission speed	10/100/1000 Mbps
Transmission length	100 m (per segment)

Supply voltage	
Supply voltage	24 V
Residual ripple	3.6 V_{PP} (within the permitted voltage range)
Supply voltage range	9 V DC ... 32 V DC
Typical current consumption	195 mA
Max. current consumption	344 mA

Mechanical tests	
Mechanical tests	Free fall in accordance with EN 61131-2
Vibration (operation)	in acc. with IEC 60068-2-6: 5g, 150 Hz
Vibration (storage/transport)	in acc. with IEC 60068-2-6: 5g, 150 Hz
Shock (operation)	30g (EN 60068-2-27)

Conformity with EMC directives	
Electromagnetic compatibility	Conformance with EMC Directive 2014/30/EU
Conducted noise emission	EN 61000-6-2 EN 55032 Class A
Interference emission	EN 61000-6-2 EN 61000-4-8 (electromagnetic fields) Criterion A
Immunity to burst	EN 61000-6-2 EN 61000-4-4 (EFT burst) Criterion A
Immunity to EF	EN 61000-6-2 EN 61000-4-3 (electromagnetic fields) Criterion A

Conformity with EMC directives	
Immunity to ESD	EN 61000-6-2 EN 61000-4-2 (ESD) Criterion B
Immunity to surge	EN 61000-6-2 EN 61000-4-5 (surge) Criterion B
Immunity to conducted interference	EN 61000-6-2 EN 61000-4-6 (line noise immunity) Criterion A

Approvals/Certificates	
UL, USA/Canada	UL 61010-1, UL 61010-2-201 Class I, Div. 2, Groups A, B, C, D, T4 Class I, Zone 2, Group IIC, T4

5.7 FL SWITCH 1004N-FX (Order No. 1084159)

Dimensions (nominal sizes in mm)	
Width	22.5 mm
Height	117 mm
Depth	84 mm

Ambient conditions	
Degree of protection	IP30
Ambient temperature (operation)	-10°C ... 60°C
Ambient temperature (storage/transport)	-40°C ... 85°C
Permissible humidity (operation)	5% ... 95% (non-condensing)
Permissible humidity (storage/transport)	5% ... 95% (non-condensing)
Air pressure (operation)	79 kPa ... 108 kPa up to 2000 m above mean sea level (Without derating)
Air pressure (storage/transport)	79 kPa ... 108 kPa up to 2000 m above mean sea level (Without derating)

General data	
Mounting type	DIN rail
Housing material	Polycarbonate fiber reinforced
MAC address table	2k
MTTF	115.1 Years (MIL-HDBK-217F standard, temperature 25°C, operating cycle 100%)
MTTF	427.5 Years (SN 29500 standard, temperature 25°C, operating cycle 21%)
MTTF	279.5 Years (Telcordia standard, 25°C temperature, 21% operating cycle (5 days a week, 8 hours a day))

Connection data	
Connection method	Push-in spring connection
Pluggable	Yes
Conductor cross section solid min.	0.2 mm²
Conductor cross section solid max.	2.5 mm²
Conductor cross section flexible min.	0.2 mm²
Conductor cross section flexible max.	2.5 mm²
Conductor cross section AWG min.	24
Conductor cross section AWG max.	12
Stripping length	10 mm

Interface: Ethernet (RJ45)	
Number of interfaces	4
Connection method	RJ45
Note on the connection method	Auto negotiation and autocrossing
Transmission physics	Ethernet in RJ45 twisted pair
Transmission speed	10/100 Mbps
Transmission length	100 m (per segment)

Interface: Ethernet FO	
Number of interfaces	1
Connection method	SC
Transmission physics	multi-mode fiberglass
Transmission speed	100 Mbps (full duplex)
Transmission length	8 km (fiberglass with F-G 62.5/125 0.7 dB/km F1000)
Transmission length	4.29 km (fiberglass with F-G 50/125 0.7 dB/km F1200)
Wavelength	1300 nm

Supply voltage	
Supply voltage	24 V DC
Residual ripple	3.6 V_{PP} (within the permitted voltage range)
Supply voltage range	9 V DC ... 32 V DC
Typical current consumption	59 mA
Max. current consumption	230 mA

Mechanical tests	
Mechanical tests	Free fall in accordance with EN 61131-2
Vibration (operation)	in acc. with IEC 60068-2-6: 5g, 150 Hz
Vibration (storage/transport)	in acc. with IEC 60068-2-6: 5g, 150 Hz
Shock (operation)	30g (EN 60068-2-27)

Conformity with EMC directives	
Electromagnetic compatibility	Conformance with EMC Directive 2014/30/EU
Conducted noise emission	EN 61000-6-2 EN 55032 Class A
Interference emission	EN 61000-6-2 EN 61000-4-8 (electromagnetic fields) Criterion A
Immunity to burst	EN 61000-6-2 EN 61000-4-4 (EFT burst) Criterion A
Immunity to EF	EN 61000-6-2 EN 61000-4-3 (electromagnetic fields) Criterion A
Immunity to ESD	EN 61000-6-2 EN 61000-4-2 (ESD) Criterion B
Immunity to surge	EN 61000-6-2 EN 61000-4-5 (surge) Criterion B
Immunity to conducted interference	EN 61000-6-2 EN 61000-4-6 (line noise immunity) Criterion A

Approvals/Certificates	
UL, USA/Canada	UL 61010-1, UL 61010-2-201 Class I, Div. 2, Groups A, B, C, D, T4 Class I, Zone 2, Group IIC, T4
Further approvals	cUL Listed, EAC, UL Listed

5.8 FL SWITCH 1004N-FX ST (Order No. 1085179)

Dimensions (nominal sizes in mm)	
Width	22.5 mm
Height	117 mm
Depth	84 mm

Ambient conditions	
Degree of protection	IP30
Ambient temperature (operation)	-10°C ... 60°C
Ambient temperature (storage/transport)	-40°C ... 85°C
Permissible humidity (operation)	5% ... 95% (non-condensing)
Permissible humidity (storage/transport)	5% ... 95% (non-condensing)
Air pressure (operation)	79 kPa ... 108 kPa up to 2000 m above mean sea level (Without derating)
Air pressure (storage/transport)	79 kPa ... 108 kPa up to 2000 m above mean sea level (Without derating)

General data	
Mounting type	DIN rail
Housing material	Polycarbonate fiber reinforced
MAC address table	2k
MTTF	115.1 Years (MIL-HDBK-217F standard, temperature 25°C, operating cycle 100%)
MTTF	427.5 Years (SN 29500 standard, temperature 25°C, operating cycle 21%)
MTTF	279.5 Years (Telcordia standard, 25°C temperature, 21% operating cycle (5 days a week, 8 hours a day))

Connection data	
Connection method	Push-in spring connection
Pluggable	Yes
Conductor cross section solid min.	0.2 mm²
Conductor cross section solid max.	2.5 mm²
Conductor cross section flexible min.	0.2 mm²
Conductor cross section flexible max.	2.5 mm²
Conductor cross section AWG min.	24
Conductor cross section AWG max.	12
Stripping length	10 mm

Interface: Ethernet (RJ45)	
Number of interfaces	4
Connection method	RJ45
Note on the connection method	Auto negotiation and autocrossing
Transmission physics	Ethernet in RJ45 twisted pair
Transmission speed	10/100 Mbps
Transmission length	100 m (per segment)

Interface: Ethernet FO	
Number of interfaces	1
Connection method	ST
Transmission physics	multi-mode fiberglass
Transmission speed	100 Mbps (full duplex)
Transmission length	8 km (fiberglass with F-G 62.5/125 0.7 dB/km F1000)
Transmission length	5.71 km (fiberglass with F-G 50/125 0.7 dB/km F1200)
Wavelength	1300 nm

Supply voltage	
Supply voltage	24 V DC
Residual ripple	3.6 V_{PP} (within the permitted voltage range)
Supply voltage range	9 V DC ... 32 V DC
Typical current consumption	60 mA
Max. current consumption	230 mA

Mechanical tests	
Mechanical tests	Free fall in accordance with EN 61131-2
Vibration (operation)	in acc. with IEC 60068-2-6: 5g, 150 Hz
Vibration (storage/transport)	in acc. with IEC 60068-2-6: 5g, 150 Hz
Shock (operation)	30g (EN 60068-2-27)

Conformity with EMC directives	
Electromagnetic compatibility	Conformance with EMC Directive 2014/30/EU
Conducted noise emission	EN 61000-6-2 EN 55032 Class A
Interference emission	EN 61000-6-2 EN 61000-4-8 (electromagnetic fields) Criterion A
Immunity to burst	EN 61000-6-2 EN 61000-4-4 (EFT burst) Criterion A
Immunity to EF	EN 61000-6-2 EN 61000-4-3 (electromagnetic fields) Criterion A
Immunity to ESD	EN 61000-6-2 EN 61000-4-2 (ESD) Criterion B
Immunity to surge	EN 61000-6-2 EN 61000-4-5 (surge) Criterion B
Immunity to conducted interference	EN 61000-6-2 EN 61000-4-6 (line noise immunity) Criterion A

Approvals/Certificates	
UL, USA/Canada	UL 61010-1, UL 61010-2-201 Class I, Div. 2, Groups A, B, C, D, T4 Class I, Zone 2, Group IIC, T4
Further approvals	cUL Listed, EAC, UL Listed

5.9 FL SWITCH 1004N-FX SM (Order No. 1085214)

Dimensions (nominal sizes in mm)	
Width	22.5 mm
Height	117 mm
Depth	84 mm

Ambient conditions	
Degree of protection	IP30
Ambient temperature (operation)	-10°C ... 60°C
Ambient temperature (storage/transport)	-40°C ... 85°C
Permissible humidity (operation)	5% ... 95% (non-condensing)
Permissible humidity (storage/transport)	5% ... 95% (non-condensing)
Air pressure (operation)	79 kPa ... 108 kPa up to 2000 m above mean sea level (Without derating)
Air pressure (storage/transport)	79 kPa ... 108 kPa up to 2000 m above mean sea level (Without derating)

General data	
Mounting type	DIN rail
Housing material	Polycarbonate fiber reinforced
MAC address table	2k
MTTF	95.9 Years (MIL-HDBK-217F standard, temperature 25°C, operating cycle 100%)
MTTF	298.8 Years (SN 29500 standard, temperature 25°C, operating cycle 21%)
MTTF	188.3 Years (Telcordia standard, 25°C temperature, 21% operating cycle (5 days a week, 8 hours a day))

Connection data	
Connection method	Push-in spring connection
Pluggable	Yes
Conductor cross section solid min.	0.2 mm²
Conductor cross section solid max.	2.5 mm²
Conductor cross section flexible min.	0.2 mm²
Conductor cross section flexible max.	2.5 mm²
Conductor cross section AWG min.	24
Conductor cross section AWG max.	12
Stripping length	10 mm

Interface: Ethernet (RJ45)	
Number of interfaces	4
Connection method	RJ45
Note on the connection method	Auto negotiation and autocrossing
Transmission physics	Ethernet in RJ45 twisted pair
Transmission speed	10/100 Mbps
Transmission length	100 m (per segment)

Interface: Ethernet FO	
Number of interfaces	1
Connection method	SC
Transmission physics	Single-mode fiberglass
Transmission speed	100 Mbps (full duplex)
Transmission length	20 km (fiberglass with F-G 9/125 0.5 dB/km)
Wavelength	1310 nm

Supply voltage	
Supply voltage	24 V DC
Residual ripple	3.6 V_{PP} (within the permitted voltage range)
Supply voltage range	9 V DC ... 32 V DC
Typical current consumption	51 mA
Max. current consumption	196 mA

Mechanical tests	
Mechanical tests	Free fall in accordance with EN 61131-2
Vibration (operation)	in acc. with IEC 60068-2-6: 5g, 150 Hz
Vibration (storage/transport)	in acc. with IEC 60068-2-6: 5g, 150 Hz
Shock (operation)	30g (EN 60068-2-27)

Conformity with EMC directives	
Electromagnetic compatibility	Conformance with EMC Directive 2014/30/EU
Conducted noise emission	EN 61000-6-2 EN 55032 Class A
Interference emission	EN 61000-6-2 EN 61000-4-8 (electromagnetic fields) Criterion A
Immunity to burst	EN 61000-6-2 EN 61000-4-4 (EFT burst) Criterion A
Immunity to EF	EN 61000-6-2 EN 61000-4-3 (electromagnetic fields) Criterion A
Immunity to ESD	EN 61000-6-2 EN 61000-4-2 (ESD) Criterion B
Immunity to surge	EN 61000-6-2 EN 61000-4-5 (surge) Criterion B
Immunity to conducted interference	EN 61000-6-2 EN 61000-4-6 (line noise immunity) Criterion A

Approvals/Certificates	
UL, USA/Canada	UL 61010-1, UL 61010-2-201 Class I, Div. 2, Groups A, B, C, D, T4 Class I, Zone 2, Group IIC, T4
Further approvals	cUL Listed, EAC, UL Listed

5.10 FL SWITCH 1004N-SFX (Order No. 1085177)

Dimensions (nominal sizes in mm)	
Width	22.5 mm
Height	117 mm
Depth	84 mm

Ambient conditions	
Degree of protection	IP30
Ambient temperature (operation)	-10°C ... 60°C
Ambient temperature (storage/transport)	-40°C ... 85°C
Permissible humidity (operation)	5% ... 95% (non-condensing)
Permissible humidity (storage/transport)	5% ... 95% (non-condensing)
Air pressure (operation)	79 kPa ... 108 kPa up to 2000 m above mean sea level (Without derating)
Air pressure (storage/transport)	79 kPa ... 108 kPa up to 2000 m above mean sea level (Without derating)

General data	
Mounting type	DIN rail
Housing material	Polycarbonate fiber reinforced
MAC address table	2k
MTTF	138.3 Years (MIL-HDBK-217F standard, temperature 25°C, operating cycle 100%)
MTTF	1647 Years (SN 29500 standard, temperature 25°C, operating cycle 21%)
MTTF	1503.6 Years (Telcordia standard, 25°C temperature, 21% operating cycle (5 days a week, 8 hours a day))

Connection data	
Connection method	Push-in spring connection
Pluggable	Yes
Conductor cross section solid min.	0.2 mm²
Conductor cross section solid max.	2.5 mm²
Conductor cross section flexible min.	0.2 mm²
Conductor cross section flexible max.	2.5 mm²
Conductor cross section AWG min.	24
Conductor cross section AWG max.	12
Stripping length	10 mm

Interface: Ethernet (RJ45)	
Number of interfaces	4
Connection method	RJ45
Note on the connection method	Auto negotiation and autocrossing
Transmission physics	Ethernet in RJ45 twisted pair
Transmission speed	10/100 Mbps
Transmission length	100 m (per segment)

Interface: SFP module	
Number of interfaces	1
Connection method	SFP ports
Transmission physics	Depending on the SFP module
Transmission speed	100 Mbps (full duplex)
Transmission length	up to 40 km (Depending on the fiber/SFP module used)

Supply voltage	
Supply voltage	24 V DC
Residual ripple	3.6 V_{PP} (within the permitted voltage range)
Supply voltage range	9 V DC ... 32 V DC
Max. current consumption	162 mA

Mechanical tests	
Mechanical tests	Free fall in accordance with EN 61131-2
Vibration (operation)	in acc. with IEC 60068-2-6: 5g, 150 Hz
Vibration (storage/transport)	in acc. with IEC 60068-2-6: 5g, 150 Hz
Shock (operation)	30g (EN 60068-2-27)

Conformity with EMC directives	
Electromagnetic compatibility	Conformance with EMC Directive 2014/30/EU
Conducted noise emission	EN 61000-6-2 EN 55032 Class A
Interference emission	EN 61000-6-2 EN 61000-4-8 (electromagnetic fields) Criterion A
Immunity to burst	EN 61000-6-2 EN 61000-4-4 (EFT burst) Criterion A
Immunity to EF	EN 61000-6-2 EN 61000-4-3 (electromagnetic fields) Criterion A
Immunity to ESD	EN 61000-6-2 EN 61000-4-2 (ESD) Criterion B
Immunity to surge	EN 61000-6-2 EN 61000-4-5 (surge) Criterion B
Immunity to conducted interference	EN 61000-6-2 EN 61000-4-6 (line noise immunity) Criterion A

Approvals/Certificates	
UL, USA/Canada	UL 61010-1, UL 61010-2-201 Class I, Div. 2, Groups A, B, C, D, T4 Class I, Zone 2, Group IIC, T4
Further approvals	cUL Listed, EAC, UL Listed

5.11 FL SWITCH 1104N-SFP (Order No. 1085173)

Dimensions (nominal sizes in mm)	
Width	22.5 mm
Height	117 mm
Depth	84 mm

Ambient conditions	
Degree of protection	IP30
Ambient temperature (operation)	-10°C ... 60°C
Ambient temperature (storage/transport)	-40°C ... 85°C
Permissible humidity (operation)	5% ... 95% (non-condensing)
Permissible humidity (storage/transport)	5% ... 95% (non-condensing)
Air pressure (operation)	79 kPa ... 108 kPa up to 2000 m above mean sea level (Without derating)
Air pressure (storage/transport)	79 kPa ... 108 kPa up to 2000 m above mean sea level (Without derating)

General data	
Mounting type	DIN rail
Housing material	Polycarbonate fiber reinforced
MAC address table	4k
MTTF	77.4 Years (MIL-HDBK-217F standard, temperature 25°C, operating cycle 100%)
MTTF	949.7 Years (SN 29500 standard, temperature 25°C, operating cycle 21%)
MTTF	828.9 Years (Telcordia standard, 25°C temperature, 21% operating cycle (5 days a week, 8 hours a day))

Connection data	
Connection method	Push-in spring connection
Pluggable	Yes
Conductor cross section solid min.	0.2 mm²
Conductor cross section solid max.	2.5 mm²
Conductor cross section flexible min.	0.2 mm²
Conductor cross section flexible max.	2.5 mm²
Conductor cross section AWG min.	24
Conductor cross section AWG max.	12
Stripping length	10 mm

Interface: Ethernet (RJ45)	
Number of interfaces	4
Connection method	RJ45
Note on the connection method	Auto negotiation and autocrossing
Transmission physics	Ethernet in RJ45 twisted pair
Transmission speed	10/100/1000 Mbps
Transmission length	100 m (per segment)

Interface: SFP module	
Number of interfaces	1
Connection method	SFP ports
Transmission physics	Depending on the SFP module
Transmission speed	100 or 1000 Mbps (full duplex)
Transmission length	up to 40 km (Depending on the fiber/SFP module used)

Supply voltage	
Supply voltage	24 V DC
Residual ripple	3.6 V_{PP} (within the permitted voltage range)
Supply voltage range	9 V DC ... 32 V DC
Typical current consumption	48 mA
Max. current consumption	474 mA

Mechanical tests	
Mechanical tests	Free fall in accordance with EN 61131-2
Vibration (operation)	in acc. with IEC 60068-2-6: 5g, 150 Hz
Vibration (storage/transport)	in acc. with IEC 60068-2-6: 5g, 150 Hz
Shock (operation)	30g (EN 60068-2-27)

Conformity with EMC directives	
Electromagnetic compatibility	Conformance with EMC Directive 2014/30/EU
Conducted noise emission	EN 61000-6-2 EN 55032 Class A
Interference emission	EN 61000-6-2 EN 61000-4-8 (electromagnetic fields) Criterion A
Immunity to burst	EN 61000-6-2 EN 61000-4-4 (EFT burst) Criterion A
Immunity to EF	EN 61000-6-2 EN 61000-4-3 (electromagnetic fields) Criterion A
Immunity to ESD	EN 61000-6-2 EN 61000-4-2 (ESD) Criterion B
Immunity to surge	EN 61000-6-2 EN 61000-4-5 (surge) Criterion B
Immunity to conducted interference	EN 61000-6-2 EN 61000-4-6 (line noise immunity) Criterion A

Approvals/Certificates	
UL, USA/Canada	UL 61010-1, UL 61010-2-201 Class I, Div. 2, Groups A, B, C, D, T4 Class I, Zone 2, Group IIC, T4
Further approvals	cUL Listed, EAC, UL Listed

5.12 FL SWITCH 1005N-2SFX (Order No. 1085176)

Dimensions (nominal sizes in mm)	
Width	22.5 mm
Height	140.4 mm
Depth	92.4 mm

Ambient conditions	
Degree of protection	IP30
Ambient temperature (operation)	-10°C ... 60°C
Ambient temperature (storage/transport)	-40°C ... 85°C
Permissible humidity (operation)	5% ... 95% (non-condensing)
Permissible humidity (storage/transport)	5% ... 95% (non-condensing)
Air pressure (operation)	79 kPa ... 108 kPa up to 2000 m above mean sea level (Without derating)
Air pressure (storage/transport)	79 kPa ... 108 kPa up to 2000 m above mean sea level (Without derating)

General data	
Mounting type	DIN rail
Housing material	Polycarbonate fiber reinforced
MAC address table	2k
MTTF	107.9 Years (MIL-HDBK-217F standard, temperature 25°C, operating cycle 100%)
MTTF	1346 Years (SN 29500 standard, temperature 25°C, operating cycle 21%)
MTTF	1294.8 Years (Telcordia standard, 25°C temperature, 21% operating cycle (5 days a week, 8 hours a day))

Connection data	
Connection method	Push-in spring connection
Pluggable	Yes
Conductor cross section solid min.	0.2 mm²
Conductor cross section solid max.	2.5 mm²
Conductor cross section flexible min.	0.2 mm²
Conductor cross section flexible max.	2.5 mm²
Conductor cross section AWG min.	24
Conductor cross section AWG max.	12
Stripping length	10 mm

Interface: Ethernet (RJ45)	
Number of interfaces	5
Connection method	RJ45
Note on the connection method	Auto negotiation and autocrossing
Transmission physics	Ethernet in RJ45 twisted pair
Transmission speed	10/100 Mbps
Transmission length	100 m (per segment)

Interface: SFP module	
Number of interfaces	2
Connection method	SFP ports
Transmission physics	Depending on the SFP module
Transmission speed	100 Mbps (full duplex)
Transmission length	up to 40 km (Depending on the fiber/SFP module used)

Supply voltage	
Supply voltage	24 V DC
Residual ripple	3.6 V_{PP} (within the permitted voltage range)
Supply voltage range	9 V DC ... 32 V DC
Typical current consumption	25 mA
Max. current consumption	252 mA

Mechanical tests	
Mechanical tests	Free fall in accordance with EN 61131-2
Vibration (operation)	in acc. with IEC 60068-2-6: 5g, 150 Hz
Vibration (storage/transport)	in acc. with IEC 60068-2-6: 5g, 150 Hz
Shock (operation)	30g (EN 60068-2-27)

Conformity with EMC directives	
Electromagnetic compatibility	Conformance with EMC Directive 2014/30/EU
Conducted noise emission	EN 61000-6-2 EN 55032 Class A
Interference emission	EN 61000-6-2 EN 61000-4-8 (electromagnetic fields) Criterion A
Immunity to burst	EN 61000-6-2 EN 61000-4-4 (EFT burst) Criterion A
Immunity to EF	EN 61000-6-2 EN 61000-4-3 (electromagnetic fields) Criterion A
Immunity to ESD	EN 61000-6-2 EN 61000-4-2 (ESD) Criterion B
Immunity to surge	EN 61000-6-2 EN 61000-4-5 (surge) Criterion B
Immunity to conducted interference	EN 61000-6-2 EN 61000-4-6 (line noise immunity) Criterion A

Approvals/Certificates	
UL, USA/Canada	UL 61010-1, UL 61010-2-201 Class I, Div. 2, Groups A, B, C, D, T4 Class I, Zone 2, Group IIC, T4
Further approvals	cUL Listed, EAC, UL Listed

5.13 FL SWITCH 1105N-2SFP (Order No. 1085171)

Dimensions (nominal sizes in mm)	
Width	22.5 mm
Height	140.4 mm
Depth	92.4 mm

Ambient conditions	
Degree of protection	IP30
Ambient temperature (operation)	-10°C ... 60°C
Ambient temperature (storage/transport)	-40°C ... 85°C
Permissible humidity (operation)	5% ... 95% (non-condensing)
Permissible humidity (storage/transport)	5% ... 95% (non-condensing)
Air pressure (operation)	79 kPa ... 108 kPa up to 2000 m above mean sea level (Without derating)
Air pressure (storage/transport)	79 kPa ... 108 kPa up to 2000 m above mean sea level (Without derating)

General data	
Mounting type	DIN rail
Housing material	Polycarbonate fiber reinforced
MAC address table	4k
MTTF	59.2 Years (MIL-HDBK-217F standard, temperature 25°C, operating cycle 100%)
MTTF	872.1 Years (SN 29500 standard, temperature 25°C, operating cycle 21%)
MTTF	836.5 Years (Telcordia standard, 25°C temperature, 21% operating cycle (5 days a week, 8 hours a day))

Connection data	
Connection method	Push-in spring connection
Pluggable	Yes
Conductor cross section solid min.	0.2 mm²
Conductor cross section solid max.	2.5 mm²
Conductor cross section flexible min.	0.2 mm²
Conductor cross section flexible max.	2.5 mm²
Conductor cross section AWG min.	24
Conductor cross section AWG max.	12
Stripping length	10 mm

Interface: Ethernet (RJ45)	
Number of interfaces	5
Connection method	RJ45
Note on the connection method	Auto negotiation and autocrossing
Transmission physics	Ethernet in RJ45 twisted pair
Transmission speed	10/100/1000 Mbps
Transmission length	100 m (per segment)

Interface: SFP module	
Number of interfaces	2
Connection method	SFP ports
Transmission physics	Depending on the SFP module
Transmission speed	100 or 1000 Mbps (full duplex)
Transmission length	Up to 40 km (Depending on the fiber/SFP module used)

Supply voltage	
Supply voltage	24 V DC
Residual ripple	3.6 V_{PP} (within the permitted voltage range)
Supply voltage range	9 V DC ... 32 V DC
Typical current consumption	30 mA
Max. current consumption	681 mA

Mechanical tests	
Mechanical tests	Free fall in accordance with EN 61131-2
Vibration (operation)	in acc. with IEC 60068-2-6: 5g, 150 Hz
Vibration (storage/transport)	in acc. with IEC 60068-2-6: 5g, 150 Hz
Shock (operation)	30g (EN 60068-2-27)

Conformity with EMC directives	
Electromagnetic compatibility	Conformance with EMC Directive 2014/30/EU
Conducted noise emission	EN 61000-6-2 EN 55032 Class A
Interference emission	EN 61000-6-2 EN 61000-4-8 (electromagnetic fields) Criterion A
Immunity to burst	EN 61000-6-2 EN 61000-4-4 (EFT burst) Criterion A
Immunity to EF	EN 61000-6-2 EN 61000-4-3 (electromagnetic fields) Criterion A
Immunity to ESD	EN 61000-6-2 EN 61000-4-2 (ESD) Criterion B
Immunity to surge	EN 61000-6-2 EN 61000-4-5 (surge) Criterion B
Immunity to conducted interference	EN 61000-6-2 EN 61000-4-6 (line noise immunity) Criterion A

Approvals/Certificates	
UL, USA/Canada	UL 61010-1, UL 61010-2-201 Class I, Div. 2, Groups A, B, C, D, T4 Class I, Zone 2, Group IIC, T4
Further approvals	cUL Listed, EAC, UL Listed

5.14 FL SWITCH 1108NT (Order No. 1085162)

Dimensions (nominal sizes in mm)	
Width	22.5 mm
Height	140.4 mm
Depth	92.4 mm

Ambient conditions	
Degree of protection	IP30
Ambient temperature (operation)	-40°C ... 75°C
Ambient temperature (storage/transport)	-40°C ... 85°C
Permissible humidity (operation)	5% ... 95% (non-condensing)
Permissible humidity (storage/transport)	5% ... 95% (non-condensing)
Air pressure (operation)	79 kPa ... 108 kPa up to 2000 m above mean sea level (Without derating)
Air pressure (storage/transport)	79 kPa ... 108 kPa up to 2000 m above mean sea level (Without derating)

General data	
Mounting type	DIN rail
Weight	280 g
Housing material	Polycarbonate fiber reinforced
MAC address table	4k
MTTF	73 Years (MIL-HDBK-217F standard, temperature 25°C, operating cycle 100%)
MTTF	755.6 Years (SN 29500 standard, temperature 25°C, operating cycle 21%)
MTTF	653.6 Years (Telcordia standard, 25°C temperature, 21% operating cycle (5 days a week, 8 hours a day))

Connection data	
Connection method	Push-in spring connection
Pluggable	Yes
Conductor cross section solid min.	0.2 mm²
Conductor cross section solid max.	2.5 mm²
Conductor cross section flexible min.	0.2 mm²
Conductor cross section flexible max.	2.5 mm²
Conductor cross section AWG min.	24
Conductor cross section AWG max.	12
Stripping length	10 mm

Interface: Ethernet (RJ45)	
Number of interfaces	8
Connection method	RJ45
Note on the connection method	Auto negotiation and autocrossing
Transmission physics	Ethernet in RJ45 twisted pair
Transmission speed	10/100/1000 Mbps
Transmission length	100 m (per segment)

Supply voltage	
Supply voltage	24 V DC
Residual ripple	3.6 V_{PP} (within the permitted voltage range)
Supply voltage range	9 V DC ... 32 V DC
Typical current consumption	18 mA
Max. current consumption	121 mA

Mechanical tests	
Mechanical tests	Free fall in accordance with EN 61131-2
Vibration (operation)	in acc. with IEC 60068-2-6: 5g, 150 Hz
Vibration (storage/transport)	in acc. with IEC 60068-2-6: 5g, 150 Hz
Shock (operation)	30g (EN 60068-2-27)

Conformity with EMC directives	
Electromagnetic compatibility	Conformance with EMC Directive 2014/30/EU
Conducted noise emission	EN 61000-6-2 EN 55032 Class A
Interference emission	EN 61000-6-2 EN 61000-4-8 (electromagnetic fields) Criterion A
Immunity to burst	EN 61000-6-2 EN 61000-4-4 (EFT burst) Criterion A
Immunity to EF	EN 61000-6-2 EN 61000-4-3 (electromagnetic fields) Criterion A
Immunity to ESD	EN 61000-6-2 EN 61000-4-2 (ESD) Criterion B
Immunity to surge	EN 61000-6-2 EN 61000-4-5 (surge) Criterion B
Immunity to conducted interference	EN 61000-6-2 EN 61000-4-6 (line noise immunity) Criterion A

Approvals/Certificates	
UL, USA/Canada	UL 61010-1, UL 61010-2-201 Class I, Div. 2, Groups A, B, C, D, T4 Class I, Zone 2, Group IIC, T4

5.15 FL SWITCH 1105NT (Order No. 1085163)

Dimensions (nominal sizes in mm)	
Width	22.5 mm
Height	117 mm
Depth	84 mm

Ambient conditions	
Degree of protection	IP30
Ambient temperature (operation)	-40°C ... 75°C
Ambient temperature (storage/transport)	-40°C ... 85°C
Permissible humidity (operation)	5% ... 95% (non-condensing)
Permissible humidity (storage/transport)	5% ... 95% (non-condensing)
Air pressure (operation)	79 kPa ... 108 kPa up to 2000 m above mean sea level (Without derating)
Air pressure (storage/transport)	79 kPa ... 108 kPa up to 2000 m above mean sea level (Without derating)

General data	
Mounting type	DIN rail
Weight	222 g
Housing material	Polycarbonate fiber reinforced
MAC address table	4k
MTTF	97.6 Years (MIL-HDBK-217F standard, temperature 25°C, operating cycle 100%)
MTTF	888.3 Years (SN 29500 standard, temperature 25°C, operating cycle 21%)
MTTF	818.3 Years (Telcordia standard, 25°C temperature, 21% operating cycle (5 days a week, 8 hours a day))

Connection data	
Connection method	Push-in spring connection
Pluggable	Yes
Conductor cross section solid min.	0.2 mm²
Conductor cross section solid max.	2.5 mm²
Conductor cross section flexible min.	0.2 mm²
Conductor cross section flexible max.	2.5 mm²
Conductor cross section AWG min.	24
Conductor cross section AWG max.	12
Stripping length	10 mm

Interface: Ethernet (RJ45)	
Number of interfaces	5
Connection method	RJ45
Note on the connection method	Auto negotiation and autocrossing
Transmission physics	Ethernet in RJ45 twisted pair
Transmission speed	10/100/1000 Mbps
Transmission length	100 m (per segment)

Supply voltage	
Supply voltage	24 V
Residual ripple	3.6 V_{PP} (within the permitted voltage range)
Supply voltage range	9 V DC ... 32 V DC
Typical current consumption	34 mA
Max. current consumption	98 mA

Mechanical tests	
Mechanical tests	Free fall in accordance with EN 61131-2
Vibration (operation)	in acc. with IEC 60068-2-6: 5g, 150 Hz
Vibration (storage/transport)	in acc. with IEC 60068-2-6: 5g, 150 Hz
Shock (operation)	30g (EN 60068-2-27)

Conformity with EMC directives	
Electromagnetic compatibility	Conformance with EMC Directive 2014/30/EU
Conducted noise emission	EN 61000-6-2 EN 55032 Class A
Interference emission	EN 61000-6-2 EN 61000-4-8 (electromagnetic fields) Criterion A
Immunity to burst	EN 61000-6-2 EN 61000-4-4 (EFT burst) Criterion A
Immunity to EF	EN 61000-6-2 EN 61000-4-3 (electromagnetic fields) Criterion A
Immunity to ESD	EN 61000-6-2 EN 61000-4-2 (ESD) Criterion B
Immunity to surge	EN 61000-6-2 EN 61000-4-5 (surge) Criterion B
Immunity to conducted interference	EN 61000-6-2 EN 61000-4-6 (line noise immunity) Criterion A

Approvals/Certificates	
UL, USA/Canada	UL 61010-1, UL 61010-2-201 Class I, Div. 2, Groups A, B, C, D, T4 Class I, Zone 2, Group IIC, T4
Further approvals	cUL Listed, EAC, UL Listed

5.16 FL SWITCH 1005NT-2SFX (Order No. 1085164)

Dimensions (nominal sizes in mm)	
Width	22.5 mm
Height	140.4 mm
Depth	92.4 mm

Ambient conditions	
Degree of protection	IP30
Ambient temperature (operation)	-40°C ... 75°C
Ambient temperature (storage/transport)	-40°C ... 85°C
Permissible humidity (operation)	5% ... 95% (non-condensing)
Permissible humidity (storage/transport)	5% ... 95% (non-condensing)
Air pressure (operation)	79 kPa ... 108 kPa up to 2000 m above mean sea level (Without derating)
Air pressure (storage/transport)	79 kPa ... 108 kPa up to 2000 m above mean sea level (Without derating)

General data	
Mounting type	DIN rail
Weight	263 g
Housing material	Polycarbonate fiber reinforced
MAC address table	2k
MTTF	115.8 Years (MIL-HDBK-217F standard, temperature 25°C, operating cycle 100%)
MTTF	1350.4 Years (SN 29500 standard, temperature 25°C, operating cycle 21%)
MTTF	1335.2 Years (Telcordia standard, 25°C temperature, 21% operating cycle (5 days a week, 8 hours a day))

Connection data	
Connection method	Push-in spring connection
Pluggable	Yes
Conductor cross section solid min.	0.2 mm²
Conductor cross section solid max.	2.5 mm²
Conductor cross section flexible min.	0.2 mm²
Conductor cross section flexible max.	2.5 mm²
Conductor cross section AWG min.	24
Conductor cross section AWG max.	12
Stripping length	10 mm

Interface: Ethernet (RJ45)	
Number of interfaces	6
Connection method	RJ45
Note on the connection method	Auto negotiation and autocrossing
Transmission physics	Ethernet in RJ45 twisted pair
Transmission speed	10/100 Mbps
Transmission length	100 m (per segment)

Interface: SFP module	
Number of interfaces	2
Connection method	SFP ports
Transmission physics	Depending on the SFP module
Transmission speed	100 Mbps (full duplex)
Transmission length	up to 40 km (Depending on the fiber/SFP module used)

Supply voltage	
Supply voltage	24 V DC
Residual ripple	3.6 V_{PP} (within the permitted voltage range)
Supply voltage range	9 V DC ... 32 V DC
Typical current consumption	25 mA
Max. current consumption	89 mA

Mechanical tests	
Mechanical tests	Free fall in accordance with EN 61131-2
Vibration (operation)	in acc. with IEC 60068-2-6: 5g, 150 Hz
Vibration (storage/transport)	in acc. with IEC 60068-2-6: 5g, 150 Hz
Shock (operation)	30g (EN 60068-2-27)

Conformity with EMC directives	
Electromagnetic compatibility	Conformance with EMC Directive 2014/30/EU
Conducted noise emission	EN 61000-6-2 EN 55032 Class A
Interference emission	EN 61000-6-2 EN 61000-4-8 (electromagnetic fields) Criterion A
Immunity to burst	EN 61000-6-2 EN 61000-4-4 (EFT burst) Criterion A
Immunity to EF	EN 61000-6-2 EN 61000-4-3 (electromagnetic fields) Criterion A
Immunity to ESD	EN 61000-6-2 EN 61000-4-2 (ESD) Criterion B
Immunity to surge	EN 61000-6-2 EN 61000-4-5 (surge) Criterion B
Immunity to conducted interference	EN 61000-6-2 EN 61000-4-6 (line noise immunity) Criterion A

Approvals/Certificates	
UL, USA/Canada	UL 61010-1, UL 61010-2-201 Class I, Div. 2, Groups A, B, C, D, T4 Class I, Zone 2, Group IIC, T4
Further approvals	cUL Listed, EAC, UL Listed

5.17 FL SWITCH 1008NT (Order No. 1085165)

Dimensions (nominal sizes in mm)	
Width	22.5 mm
Height	140.4 mm
Depth	92.4 mm

Ambient conditions	
Degree of protection	IP30
Ambient temperature (operation)	-40°C ... 75°C
Ambient temperature (storage/transport)	-40°C ... 85°C
Permissible humidity (operation)	5% ... 95% (non-condensing)
Permissible humidity (storage/transport)	5% ... 95% (non-condensing)
Air pressure (operation)	79 kPa ... 108 kPa up to 2000 m above mean sea level (Without derating)
Air pressure (storage/transport)	79 kPa ... 108 kPa up to 2000 m above mean sea level (Without derating)

General data	
Mounting type	DIN rail
Weight	266 g
Housing material	Polycarbonate fiber reinforced
MAC address table	2k
MTTF	133.6 Years (MIL-HDBK-217F standard, temperature 25°C, operating cycle 100%)
MTTF	1254 Years (SN 29500 standard, temperature 25°C, operating cycle 21%)
MTTF	1203.8 Years (Telcordia standard, 25°C temperature, 21% operating cycle (5 days a week, 8 hours a day))

Connection data	
Connection method	Push-in spring connection
Pluggable	Yes
Conductor cross section solid min.	0.2 mm²
Conductor cross section solid max.	2.5 mm²
Conductor cross section flexible min.	0.2 mm²
Conductor cross section flexible max.	2.5 mm²
Conductor cross section AWG min.	24
Conductor cross section AWG max.	12
Stripping length	10 mm

Interface: Ethernet (RJ45)	
Number of interfaces	8
Connection method	RJ45
Note on the connection method	Auto negotiation and autocrossing
Transmission physics	Ethernet in RJ45 twisted pair
Transmission speed	10/100 Mbps
Transmission length	100 m (per segment)

Supply voltage	
Supply voltage	24 V
Residual ripple	3.6 V_{PP} (within the permitted voltage range)
Supply voltage range	9 V DC ... 32 V DC
Typical current consumption	26 mA
Max. current consumption	57 mA

Mechanical tests	
Mechanical tests	Free fall in accordance with EN 61131-2
Vibration (operation)	in acc. with IEC 60068-2-6: 5g, 150 Hz
Vibration (storage/transport)	in acc. with IEC 60068-2-6: 5g, 150 Hz
Shock (operation)	30g (EN 60068-2-27)

Conformity with EMC directives	
Electromagnetic compatibility	Conformance with EMC Directive 2014/30/EU
Conducted noise emission	EN 61000-6-2 EN 55032 Class A
Interference emission	EN 61000-6-2 EN 61000-4-8 (electromagnetic fields) Criterion A
Immunity to burst	EN 61000-6-2 EN 61000-4-4 (EFT burst) Criterion A
Immunity to EF	EN 61000-6-2 EN 61000-4-3 (electromagnetic fields) Criterion A
Immunity to ESD	EN 61000-6-2 EN 61000-4-2 (ESD) Criterion B
Immunity to surge	EN 61000-6-2 EN 61000-4-5 (surge) Criterion B
Immunity to conducted interference	EN 61000-6-2 EN 61000-4-6 (line noise immunity) Criterion A

Approvals/Certificates	
UL, USA/Canada	UL 61010-1, UL 61010-2-201 Class I, Div. 2, Groups A, B, C, D, T4 Class I, Zone 2, Group IIC, T4
Further approvals	cUL Listed, EAC, UL Listed

5.18 FL SWITCH 1004NT-SFX (Order No. 1085169)

Dimensions (nominal sizes in mm)	
Width	22.5 mm
Height	117 mm
Depth	84 mm

Ambient conditions	
Degree of protection	IP30
Ambient temperature (operation)	-40°C ... 75°C
Ambient temperature (storage/transport)	-40°C ... 85°C
Permissible humidity (operation)	5% ... 95% (non-condensing)
Permissible humidity (storage/transport)	5% ... 95% (non-condensing)
Air pressure (operation)	79 kPa ... 108 kPa up to 2000 m above mean sea level (Without derating)
Air pressure (storage/transport)	79 kPa ... 108 kPa up to 2000 m above mean sea level (Without derating)

General data	
Mounting type	DIN rail
Weight	205 g
Housing material	Polycarbonate fiber reinforced
MAC address table	2k
MTTF	143.4 Years (MIL-HDBK-217F standard, temperature 25°C, operating cycle 100%)
MTTF	1664.2 Years (SN 29500 standard, temperature 25°C, operating cycle 21%)
MTTF	1582.8 Years (Telcordia standard, 25°C temperature, 21% operating cycle (5 days a week, 8 hours a day))

Connection data	
Connection method	Push-in spring connection
Pluggable	Yes
Conductor cross section solid min.	0.2 mm²
Conductor cross section solid max.	2.5 mm²
Conductor cross section flexible min.	0.2 mm²
Conductor cross section flexible max.	2.5 mm²
Conductor cross section AWG min.	24
Conductor cross section AWG max.	12
Stripping length	10 mm

Interface: Ethernet (RJ45)	
Number of interfaces	4
Connection method	RJ45
Note on the connection method	Auto negotiation and autocrossing
Transmission physics	Ethernet in RJ45 twisted pair
Transmission speed	10/100 Mbps
Transmission length	100 m (per segment)

Interface: SFP module	
Number of interfaces	1
Connection method	SFP ports
Transmission physics	Depending on the SFP module
Transmission speed	100 Mbps (full duplex)
Transmission length	up to 40 km (Depending on the fiber/SFP module used)

Supply voltage	
Supply voltage	24 V DC
Residual ripple	3.6 V_{PP} (within the permitted voltage range)
Supply voltage range	9 V DC ... 32 V DC
Typical current consumption	21 mA
Max. current consumption	59 mA

Mechanical tests	
Mechanical tests	Free fall in accordance with EN 61131-2
Vibration (operation)	in acc. with IEC 60068-2-6: 5g, 150 Hz
Vibration (storage/transport)	in acc. with IEC 60068-2-6: 5g, 150 Hz
Shock (operation)	30g (EN 60068-2-27)

Conformity with EMC directives	
Electromagnetic compatibility	Conformance with EMC Directive 2014/30/EU
Conducted noise emission	EN 61000-6-2 EN 55032 Class A
Interference emission	EN 61000-6-2 EN 61000-4-8 (electromagnetic fields) Criterion A
Immunity to burst	EN 61000-6-2 EN 61000-4-4 (EFT burst) Criterion A
Immunity to EF	EN 61000-6-2 EN 61000-4-3 (electromagnetic fields) Criterion A
Immunity to ESD	EN 61000-6-2 EN 61000-4-2 (ESD) Criterion B
Immunity to surge	EN 61000-6-2 EN 61000-4-5 (surge) Criterion B
Immunity to conducted interference	EN 61000-6-2 EN 61000-4-6 (line noise immunity) Criterion A

Approvals/Certificates	
UL, USA/Canada	UL 61010-1, UL 61010-2-201 Class I, Div. 2, Groups A, B, C, D, T4 Class I, Zone 2, Group IIC, T4
Further approvals	cUL Listed, EAC, UL Listed

5.19 FL SWITCH 1005NT (Order No. 1085170)

Dimensions (nominal sizes in mm)	
Width	22.5 mm
Height	117 mm
Depth	84 mm

Ambient conditions	
Degree of protection	IP30
Ambient temperature (operation)	-40°C ... 75°C
Ambient temperature (storage/transport)	-40°C ... 85°C
Permissible humidity (operation)	5% ... 95% (non-condensing)
Permissible humidity (storage/transport)	5% ... 95% (non-condensing)
Air pressure (operation)	79 kPa ... 108 kPa up to 2000 m above mean sea level (Without derating)
Air pressure (storage/transport)	79 kPa ... 108 kPa up to 2000 m above mean sea level (Without derating)

General data	
Mounting type	DIN rail
Weight	222 g
Housing material	Polycarbonate fiber reinforced
MAC address table	2k
MTTF	173.1 Years (MIL-HDBK-217F standard, temperature 25°C, operating cycle 100%)
MTTF	1627.3 Years (SN 29500 standard, temperature 25°C, operating cycle 21%)
MTTF	1538.9 Years (Telcordia standard, 25°C temperature, 21% operating cycle (5 days a week, 8 hours a day))

Connection data	
Connection method	Push-in spring connection
Pluggable	Yes
Conductor cross section solid min.	0.2 mm²
Conductor cross section solid max.	2.5 mm²
Conductor cross section flexible min.	0.2 mm²
Conductor cross section flexible max.	2.5 mm²
Conductor cross section AWG min.	24
Conductor cross section AWG max.	12
Stripping length	10 mm

Interface: Ethernet (RJ45)	
Number of interfaces	5
Connection method	RJ45
Note on the connection method	Auto negotiation and autocrossing
Transmission physics	Ethernet in RJ45 twisted pair
Transmission speed	10/100 Mbps
Transmission length	100 m (per segment)

Supply voltage	
Supply voltage	24 V
Residual ripple	3.6 V_{PP} (within the permitted voltage range)
Supply voltage range	9 V DC ... 32 V DC
Typical current consumption	21 mA
Max. current consumption	40 mA

Mechanical tests	
Mechanical tests	Free fall in accordance with EN 61131-2
Vibration (operation)	in acc. with IEC 60068-2-6: 5g, 150 Hz
Vibration (storage/transport)	in acc. with IEC 60068-2-6: 5g, 150 Hz
Shock (operation)	30g (EN 60068-2-27)

Conformity with EMC directives	
Electromagnetic compatibility	Conformance with EMC Directive 2014/30/EU
Conducted noise emission	EN 61000-6-2 EN 55032 Class A
Interference emission	EN 61000-6-2 EN 61000-4-8 (electromagnetic fields) Criterion A
Immunity to burst	EN 61000-6-2 EN 61000-4-4 (EFT burst) Criterion A
Immunity to EF	EN 61000-6-2 EN 61000-4-3 (electromagnetic fields) Criterion A
Immunity to ESD	EN 61000-6-2 EN 61000-4-2 (ESD) Criterion B
Immunity to surge	EN 61000-6-2 EN 61000-4-5 (surge) Criterion B
Immunity to conducted interference	EN 61000-6-2 EN 61000-4-6 (line noise immunity) Criterion A

Approvals/Certificates	
UL, USA/Canada	UL 61010-1, UL 61010-2-201 Class I, Div. 2, Groups A, B, C, D, T4 Class I, Zone 2, Group IIC, T4
Further approvals	cUL Listed, EAC, UL Listed

5.20 FL SWITCH 1012NT-2SFP (Order No. 1249598)

Dimensions (nominal sizes in mm)	
Width	40 mm
Height	140.4 mm
Depth	92.4 mm

Ambient conditions	
Degree of protection	IP30
Ambient temperature (operation)	-40°C ... 75°C
Ambient temperature (storage/transport)	-40°C ... 85°C
Permissible humidity (operation)	5% ... 95% (non-condensing)
Permissible humidity (storage/transport)	5% ... 95% (non-condensing)
Air pressure (operation)	79 kPa ... 108 kPa up to 2000 m above mean sea level (Without derating)
Air pressure (storage/transport)	79 kPa ... 108 kPa up to 2000 m above mean sea level (Without derating)

General data	
Mounting type	DIN rail
Weight	433 g
Housing material	Polycarbonate fiber reinforced
MAC address table	8k
MTTF	64.3 Years (MIL-HDBK-217F standard, temperature 25°C, operating cycle 100%)
MTTF	298.8 Years (SN 29500 standard, temperature 25°C, operating cycle 21%)
MTTF	560.1 Years (Telcordia standard, 25°C temperature, 21% operating cycle (5 days a week, 8 hours a day))

Connection data	
Connection method	Push-in spring connection
Pluggable	Yes
Conductor cross section solid min.	0.2 mm²
Conductor cross section solid max.	2.5 mm²
Conductor cross section flexible min.	0.2 mm²
Conductor cross section flexible max.	2.5 mm²
Conductor cross section AWG min.	24
Conductor cross section AWG max.	12
Stripping length	10 mm

Interface: Ethernet (RJ45)	
Number of interfaces	12
Connection method	RJ45
Note on the connection method	Auto negotiation and autocrossing
Transmission physics	Ethernet in RJ45 twisted pair
Transmission speed	10/100 Mbps
Transmission length	100 m (per segment)

Interface: SFP module	
Number of interfaces	2
Connection method	SFP ports
Transmission physics	Depending on the SFP module
Transmission speed	100 or 1000 Mbps (full duplex)
Transmission length	up to 40 km (Depending on the fiber/SFP module used)

Supply voltage	
Supply voltage	24 V DC
Residual ripple	3.6 V_{PP} (within the permitted voltage range)
Supply voltage range	9 V DC ... 32 V DC
Typical current consumption	125 mA
Max. current consumption	223 mA

Mechanical tests	
Mechanical tests	Free fall in accordance with EN 61131-2
Vibration (operation)	in acc. with IEC 60068-2-6: 5g, 150 Hz
Vibration (storage/transport)	in acc. with IEC 60068-2-6: 5g, 150 Hz
Shock (operation)	30g (EN 60068-2-27)

Conformity with EMC directives	
Electromagnetic compatibility	Conformance with EMC Directive 2014/30/EU
Conducted noise emission	EN 61000-6-2 EN 55032 Class A
Interference emission	EN 61000-6-2 EN 61000-4-8 (electromagnetic fields) Criterion A
Immunity to burst	EN 61000-6-2 EN 61000-4-4 (EFT burst) Criterion A
Immunity to EF	EN 61000-6-2 EN 61000-4-3 (electromagnetic fields) Criterion A
Immunity to ESD	EN 61000-6-2 EN 61000-4-2 (ESD) Criterion B
Immunity to surge	EN 61000-6-2 EN 61000-4-5 (surge) Criterion B
Immunity to conducted interference	EN 61000-6-2 EN 61000-4-6 (line noise immunity) Criterion A

Approvals/Certificates	
UL, USA/Canada	UL 61010-1, UL 61010-2-201 Class I, Div. 2, Groups A, B, C, D, T4 Class I, Zone 2, Group IIC, T4

5.21 FL SWITCH 1024T (Order No. 1343027)

Dimensions (nominal sizes in mm)	
Width	65 mm
Height	140mm
Depth	107 mm

Ambient conditions	
Degree of protection	IP30
Ambient temperature (operation)	-40°C ... 75°C
Ambient temperature (storage/transport)	-40°C ... 85°C
Permissible humidity (operation)	5% ... 95% (non-condensing)
Permissible humidity (storage/transport)	5% ... 95% (non-condensing)
Air pressure (operation)	79 kPa ... 108 kPa up to 2000 m above mean sea level (Without derating)
Air pressure (storage/transport)	79 kPa ... 108 kPa up to 2000 m above mean sea level (Without derating)

General data	
Mounting type	DIN rail
Weight	620 g
Housing material	Polycarbonate fiber reinforced
MAC address table	8k
MTTF	64.3 Years (MIL-HDBK-217F standard, temperature 25°C, operating cycle 100%)
MTTF	298.8 Years (SN 29500 standard, temperature 25°C, operating cycle 21%)
MTTF	560.1 Years (Telcordia standard, 25°C temperature, 21% operating cycle (5 days a week, 8 hours a day))

Connection data	
Connection method	Push-in spring connection
Pluggable	Yes
Conductor cross section solid min.	0.2 mm²
Conductor cross section solid max.	2.5 mm²
Conductor cross section flexible min.	0.2 mm²
Conductor cross section flexible max.	2.5 mm²
Conductor cross section AWG min.	24
Conductor cross section AWG max.	12
Stripping length	10 mm

Interface: Ethernet (RJ45)	
Number of interfaces	24
Connection method	RJ45
Note on the connection method	Auto negotiation and autocrossing
Transmission physics	Ethernet in RJ45 twisted pair
Transmission speed	10/100 Mbps
Transmission length	100 m (per segment)

Supply voltage	
Supply voltage	24 V DC
Residual ripple	3.6 V_{PP} (within the permitted voltage range)
Supply voltage range	9 V DC ... 32 V DC
Typical current consumption	56 mA
Max. current consumption	370 mA

Mechanical tests	
Mechanical tests	Free fall in accordance with EN 61131-2
Vibration (operation)	in acc. with IEC 60068-2-6: 5g, 150 Hz
Vibration (storage/transport)	in acc. with IEC 60068-2-6: 5g, 150 Hz
Shock (operation)	30g (EN 60068-2-27)

Conformity with EMC directives	
Electromagnetic compatibility	Conformance with EMC Directive 2014/30/EU
Conducted noise emission	EN 61000-6-2 EN 55032 Class A
Interference emission	EN 61000-6-2 EN 61000-4-8 (electromagnetic fields) Criterion A
Immunity to burst	EN 61000-6-2 EN 61000-4-4 (EFT burst) Criterion A
Immunity to EF	EN 61000-6-2 EN 61000-4-3 (electromagnetic fields) Criterion A
Immunity to ESD	EN 61000-6-2 EN 61000-4-2 (ESD) Criterion B
Immunity to surge	EN 61000-6-2 EN 61000-4-5 (surge) Criterion B
Immunity to conducted interference	EN 61000-6-2 EN 61000-4-6 (line noise immunity) Criterion A

5.22 FL SWITCH 1116T (Order No. 1085115)

Dimensions (nominal sizes in mm)	
Width	65 mm
Height	140 mm
Depth	107 mm

Ambient conditions	
Degree of protection	IP30
Ambient temperature (operation)	-40°C ... 75°C
Ambient temperature (storage/transport)	-40°C ... 85°C
Permissible humidity (operation)	5% ... 95% (non-condensing)
Permissible humidity (storage/transport)	5% ... 95% (non-condensing)
Air pressure (operation)	79 kPa ... 108 kPa up to 2000 m above mean sea level (Without derating)
Air pressure (storage/transport)	79 kPa ... 108 kPa up to 2000 m above mean sea level (Without derating)

General data	
Mounting type	DIN rail
Weight	631 g
Housing material	Polycarbonate fiber reinforced
MAC address table	8k
MTTF	64.3 Years (MIL-HDBK-217F standard, temperature 25°C, operating cycle 100%)
MTTF	298.8 Years (SN 29500 standard, temperature 25°C, operating cycle 21%)
MTTF	560.1 Years (Telcordia standard, 25°C temperature, 21% operating cycle (5 days a week, 8 hours a day))

Connection data	
Connection method	Push-in spring connection
Pluggable	Yes
Conductor cross section solid min.	0.2 mm²
Conductor cross section solid max.	2.5 mm²
Conductor cross section flexible min.	0.2 mm²
Conductor cross section flexible max.	2.5 mm²
Conductor cross section AWG min.	24
Conductor cross section AWG max.	12
Stripping length	10 mm

Interface: Ethernet (RJ45)	
Number of interfaces	16
Connection method	RJ45
Note on the connection method	Auto negotiation and autocrossing
Transmission physics	Ethernet in RJ45 twisted pair
Transmission speed	10/100/1000 Mbps
Transmission length	100 m (per segment)

Supply voltage	
Supply voltage	24 V DC
Residual ripple	3.6 V_{PP} (within the permitted voltage range)
Supply voltage range	9 V DC ... 32 V DC
Typical current consumption	191 mA
Max. current consumption	938 mA

Mechanical tests	
Mechanical tests	Free fall in accordance with EN 61131-2
Vibration (operation)	in acc. with IEC 60068-2-6: 5g, 150 Hz
Vibration (storage/transport)	in acc. with IEC 60068-2-6: 5g, 150 Hz
Shock (operation)	30g (EN 60068-2-27)

Conformity with EMC directives	
Electromagnetic compatibility	Conformance with EMC Directive 2014/30/EU
Conducted noise emission	EN 61000-6-2 EN 55032 Class A
Interference emission	EN 61000-6-2 EN 61000-4-8 (electromagnetic fields) Criterion A
Immunity to burst	EN 61000-6-2 EN 61000-4-4 (EFT burst) Criterion A
Immunity to EF	EN 61000-6-2 EN 61000-4-3 (electromagnetic fields) Criterion A
Immunity to ESD	EN 61000-6-2 EN 61000-4-2 (ESD) Criterion B
Immunity to surge	EN 61000-6-2 EN 61000-4-5 (surge) Criterion B
Immunity to conducted interference	EN 61000-6-2 EN 61000-4-6 (line noise immunity) Criterion A

5.23 FL SWITCH 1104NT-SFP (Order No. 1343023)

Dimensions (nominal sizes in mm)	
Width	22.5 mm
Height	123 mm
Depth	90 mm

Ambient conditions	
Degree of protection	IP30
Ambient temperature (operation)	-40°C ... 75°C
Ambient temperature (storage/transport)	-40°C ... 85°C
Permissible humidity (operation)	5% ... 95% (non-condensing)
Permissible humidity (storage/transport)	5% ... 95% (non-condensing)
Air pressure (operation)	79 kPa ... 108 kPa up to 2000 m above mean sea level (Without derating)
Air pressure (storage/transport)	79 kPa ... 108 kPa up to 2000 m above mean sea level (Without derating)

General data	
Mounting type	DIN rail
Weight	220 g
Housing material	Polycarbonate fiber reinforced
MAC address table	8k
MTTF	64.3 Years (MIL-HDBK-217F standard, temperature 25°C, operating cycle 100%)
MTTF	298.8 Years (SN 29500 standard, temperature 25°C, operating cycle 21%)
MTTF	560.1 Years (Telcordia standard, 25°C temperature, 21% operating cycle (5 days a week, 8 hours a day))

Connection data	
Connection method	Push-in spring connection
Pluggable	Yes
Conductor cross section solid min.	0.2 mm²
Conductor cross section solid max.	2.5 mm²
Conductor cross section flexible min.	0.2 mm²
Conductor cross section flexible max.	2.5 mm²
Conductor cross section AWG min.	24
Conductor cross section AWG max.	12
Stripping length	10 mm

Interface: Ethernet (RJ45)	
Number of interfaces	4
Connection method	RJ45
Note on the connection method	Auto negotiation and autocrossing
Transmission physics	Ethernet in RJ45 twisted pair
Transmission speed	10/100 Mbps
Transmission length	100 m (per segment)

Interface: SFP module	
Number of interfaces	1
Connection method	SFP ports
Transmission physics	Depending on the SFP module
Transmission speed	100 or 1000 Mbps (full duplex)
Transmission length	up to 40 km (Depending on the fiber/SFP module used)

Supply voltage	
Supply voltage	24 V AC/DC
Residual ripple	3.6 V_{PP} (within the permitted voltage range)
Supply voltage range	9 V DC ... 32 V DC 18 V AC ... 30 V AC
Typical current consumption	47 mA
Max. current consumption	425 mA

Mechanical tests	
Mechanical tests	Free fall in accordance with EN 61131-2
Vibration (operation)	in acc. with IEC 60068-2-6: 5g, 150 Hz
Vibration (storage/transport)	in acc. with IEC 60068-2-6: 5g, 150 Hz
Shock (operation)	30g (EN 60068-2-27)

Conformity with EMC directives	
Electromagnetic compatibility	Conformance with EMC Directive 2014/30/EU
Conducted noise emission	EN 61000-6-2 EN 55032 Class A
Interference emission	EN 61000-6-2 EN 61000-4-8 (electromagnetic fields) Criterion A
Immunity to burst	EN 61000-6-2 EN 61000-4-4 (EFT burst) Criterion A
Immunity to EF	EN 61000-6-2 EN 61000-4-3 (electromagnetic fields) Criterion A
Immunity to ESD	EN 61000-6-2 EN 61000-4-2 (ESD) Criterion B
Immunity to surge	EN 61000-6-2 EN 61000-4-5 (surge) Criterion B
Immunity to conducted interference	EN 61000-6-2 EN 61000-4-6 (line noise immunity) Criterion A

Approvals/Certificates	
UL, USA/Canada	UL 61010-1, UL 61010-2-201 Class I, Div. 2, Groups A, B, C, D, T4 Class I, Zone 2, Group IIC, T4

5.24 FL SWITCH 1105NT-2SFP (Order No. 1343025)

Dimensions (nominal sizes in mm)	
Width	22.5 mm
Height	148 mm
Depth	98 mm

Ambient conditions	
Degree of protection	IP30
Ambient temperature (operation)	-40°C ... 75°C
Ambient temperature (storage/transport)	-40°C ... 85°C
Permissible humidity (operation)	5% ... 95% (non-condensing)
Permissible humidity (storage/transport)	5% ... 95% (non-condensing)
Air pressure (operation)	79 kPa ... 108 kPa up to 2000 m above mean sea level (Without derating)
Air pressure (storage/transport)	79 kPa ... 108 kPa up to 2000 m above mean sea level (Without derating)

General data	
Mounting type	DIN rail
Weight	279 g
Housing material	Polycarbonate fiber reinforced
MAC address table	4k
MTTF	64.3 Years (MIL-HDBK-217F standard, temperature 25°C, operating cycle 100%)
MTTF	298.8 Years (SN 29500 standard, temperature 25°C, operating cycle 21%)
MTTF	560.1 Years (Telcordia standard, 25°C temperature, 21% operating cycle (5 days a week, 8 hours a day))

Connection data	
Connection method	Push-in spring connection
Pluggable	Yes
Conductor cross section solid min.	0.2 mm²
Conductor cross section solid max.	2.5 mm²
Conductor cross section flexible min.	0.2 mm²
Conductor cross section flexible max.	2.5 mm²
Conductor cross section AWG min.	24
Conductor cross section AWG max.	12
Stripping length	10 mm

Interface: Ethernet (RJ45)	
Number of interfaces	5
Connection method	RJ45
Note on the connection method	Auto negotiation and autocrossing
Transmission physics	Ethernet in RJ45 twisted pair
Transmission speed	10/100/1000 Mbps
Transmission length	100 m (per segment)

Interface: SFP module	
Number of interfaces	2
Connection method	SFP ports
Transmission physics	Depending on the SFP module
Transmission speed	100 or 1000 Mbps (full duplex)
Transmission length	up to 40 km (Depending on the fiber/SFP module used)

Supply voltage	
Supply voltage	24 V AC/DC
Residual ripple	3.6 V_{PP} (within the permitted voltage range)
Supply voltage range	9 V DC ... 32 V DC 18 V AC ... 30 V AC
Typical current consumption	33 mA
Max. current consumption	560 mA

Mechanical tests	
Mechanical tests	Free fall in accordance with EN 61131-2
Vibration (operation)	in acc. with IEC 60068-2-6: 5g, 150 Hz
Vibration (storage/transport)	in acc. with IEC 60068-2-6: 5g, 150 Hz
Shock (operation)	30g (EN 60068-2-27)

Conformity with EMC directives	
Electromagnetic compatibility	Conformance with EMC Directive 2014/30/EU
Conducted noise emission	EN 61000-6-2 EN 55032 Class A
Interference emission	EN 61000-6-2 EN 61000-4-8 (electromagnetic fields) Criterion A
Immunity to burst	EN 61000-6-2 EN 61000-4-4 (EFT burst) Criterion A
Immunity to EF	EN 61000-6-2 EN 61000-4-3 (electromagnetic fields) Criterion A
Immunity to ESD	EN 61000-6-2 EN 61000-4-2 (ESD) Criterion B
Immunity to surge	EN 61000-6-2 EN 61000-4-5 (surge) Criterion B
Immunity to conducted interference	EN 61000-6-2 EN 61000-4-6 (line noise immunity) Criterion A

Approvals/Certificates	
UL, USA/Canada	UL 61010-1, UL 61010-2-201 Class I, Div. 2, Groups A, B, C, D, T4 Class I, Zone 2, Group IIC, T4

5.25 FL SWITCH 1108T (Order No. 1085088)

Dimensions (nominal sizes in mm)	
Width	40 mm
Height	124,4 mm
Depth	84 mm

Ambient conditions	
Degree of protection	IP30
Ambient temperature (operation)	-40°C ... 75°C
Ambient temperature (storage/transport)	-40°C ... 85°C
Permissible humidity (operation)	5% ... 95% (non-condensing)
Permissible humidity (storage/transport)	5% ... 95% (non-condensing)
Air pressure (operation)	79 kPa ... 108 kPa up to 2000 m above mean sea level (Without derating)
Air pressure (storage/transport)	79 kPa ... 108 kPa up to 2000 m above mean sea level (Without derating)

General data	
Mounting type	DIN rail
Weight	274 g
Housing material	Polycarbonate fiber reinforced
MAC address table	4k
MTTF	76.8 Years (MIL-HDBK-217F standard, temperature 25°C, operating cycle 100%)
MTTF	1593.5 Years (SN 29500 standard, temperature 25°C, operating cycle 21%)
MTTF	1400.7 Years (Telcordia standard, 25°C temperature, 21% operating cycle (5 days a week, 8 hours a day))

Connection data	
Connection method	Push-in spring connection
Pluggable	Yes
Conductor cross section solid min.	0.2 mm²
Conductor cross section solid max.	2.5 mm²
Conductor cross section flexible min.	0.2 mm²
Conductor cross section flexible max.	2.5 mm²
Conductor cross section AWG min.	24
Conductor cross section AWG max.	12
Stripping length	10 mm

Interface: Ethernet (RJ45)	
Number of interfaces	8
Connection method	RJ45
Note on the connection method	Auto negotiation and autocrossing
Transmission physics	Ethernet in RJ45 twisted pair
Transmission speed	10/100/1000 Mbps
Transmission length	100 m (per segment)

Supply voltage	
Supply voltage	24 V
Residual ripple	3.6 V_{PP} (within the permitted voltage range)
Supply voltage range	9 V DC ... 32 V DC
Typical current consumption	55 mA
Max. current consumption	170 mA

Mechanical tests	
Mechanical tests	Free fall in accordance with EN 61131-2
Vibration (operation)	in acc. with IEC 60068-2-6: 5g, 150 Hz
Vibration (storage/transport)	in acc. with IEC 60068-2-6: 5g, 150 Hz
Shock (operation)	30g (EN 60068-2-27)

Conformity with EMC directives	
Electromagnetic compatibility	Conformance with EMC Directive 2014/30/EU
Conducted noise emission	EN 61000-6-2 EN 55032 Class A
Interference emission	EN 61000-6-2 EN 61000-4-8 (electromagnetic fields) Criterion A
Immunity to burst	EN 61000-6-2 EN 61000-4-4 (EFT burst) Criterion A
Immunity to EF	EN 61000-6-2 EN 61000-4-3 (electromagnetic fields) Criterion A
Immunity to ESD	EN 61000-6-2 EN 61000-4-2 (ESD) Criterion B
Immunity to surge	EN 61000-6-2 EN 61000-4-5 (surge) Criterion B
Immunity to conducted interference	EN 61000-6-2 EN 61000-4-6 (line noise immunity) Criterion A

Approvals/Certificates	
UL, USA	UL 61010-1, UL 61010-2-201
UL, USA/Canada	Class I, Div. 2, Groups A, B, C, D T4 Class I, Zone 2, IIC T4
ATEX	Ⓔx II 3 G Ex ec IIC T4 Gc UL 23 ATEX 3070X
IECEx	Ex ec IIC T4 Gc IECEx UL 23.0064X

5.26 FL SWITCH 1008T (Order No. 1085094)

Dimensions (nominal sizes in mm)	
Width	40 mm
Height	125.4 mm
Depth	84 mm

Ambient conditions	
Degree of protection	IP30
Ambient temperature (operation)	-40°C ... 75°C
Ambient temperature (storage/transport)	-40°C ... 85°C
Permissible humidity (operation)	5% ... 95% (non-condensing)
Permissible humidity (storage/transport)	5% ... 95% (non-condensing)
Air pressure (operation)	79 kPa ... 108 kPa up to 2000 m above mean sea level (Without derating)
Air pressure (storage/transport)	79 kPa ... 108 kPa up to 2000 m above mean sea level (Without derating)

General data	
Mounting type	DIN rail
Weight	259 g
Housing material	Polycarbonate fiber reinforced Aluminum/steel sheet DC01
MAC address table	2k
MTTF	146 Years (MIL-HDBK-217F standard, temperature 25°C, operating cycle 100%)
MTTF	1266.3 Years (SN 29500 standard, temperature 25°C, operating cycle 21%)
MTTF	1125.1 Years (Telcordia standard, 25°C temperature, 21% operating cycle (5 days a week, 8 hours a day))

Connection data	
Connection method	Push-in spring connection
Pluggable	Yes
Conductor cross section solid min.	0.2 mm²
Conductor cross section solid max.	2.5 mm²
Conductor cross section flexible min.	0.2 mm²
Conductor cross section flexible max.	2.5 mm²
Conductor cross section AWG min.	24
Conductor cross section AWG max.	12
Stripping length	10 mm

Interface: Ethernet (RJ45)	
Number of interfaces	8
Connection method	RJ45
Note on the connection method	Auto negotiation and autocrossing
Transmission physics	Ethernet in RJ45 twisted pair
Transmission speed	10/100 Mbps
Transmission length	100 m (per segment)

Supply voltage	
Supply voltage	24 V
Residual ripple	3.6 V_{PP} (within the permitted voltage range)
Supply voltage range	9 V DC ... 32 V DC
Typical current consumption	36 mA
Max. current consumption	460 mA

Mechanical tests	
Mechanical tests	Free fall in accordance with EN 61131-2
Vibration (operation)	in acc. with IEC 60068-2-6: 5g, 150 Hz
Vibration (storage/transport)	in acc. with IEC 60068-2-6: 5g, 150 Hz
Shock (operation)	30g (EN 60068-2-27)

Conformity with EMC directives	
Electromagnetic compatibility	Conformance with EMC Directive 2014/30/EU
Conducted noise emission	EN 61000-6-2 EN 55032 Class A
Interference emission	EN 61000-6-2 EN 61000-4-8 (electromagnetic fields) Criterion A
Immunity to burst	EN 61000-6-2 EN 61000-4-4 (EFT burst) Criterion A
Immunity to EF	EN 61000-6-2 EN 61000-4-3 (electromagnetic fields) Criterion A
Immunity to ESD	EN 61000-6-2 EN 61000-4-2 (ESD) Criterion B
Immunity to surge	EN 61000-6-2 EN 61000-4-5 (surge) Criterion B
Immunity to conducted interference	EN 61000-6-2 EN 61000-4-6 (line noise immunity) Criterion A

Approvals/Certificates	
UL, USA	UL 61010-1, UL 61010-2-201

5.27 FL SWITCH 1000N-8POE (Order No. 1343031)

Dimensions (nominal sizes in mm)	
Width	40 mm
Height	140.4 mm
Depth	92.4 mm

Ambient conditions	
Degree of protection	IP30
Ambient temperature (operation)	-10°C ... 60°C
Ambient temperature (storage/transport)	-40°C ... 85°C
Permissible humidity (operation)	5% ... 95% (non-condensing)
Permissible humidity (storage/transport)	5% ... 95% (non-condensing)
Air pressure (operation)	79 kPa ... 108 kPa up to 2000 m above mean sea level (Without derating)
Air pressure (storage/transport)	79 kPa ... 108 kPa up to 2000 m above mean sea level (Without derating)

General data	
Mounting type	DIN rail
Weight	457 g
Housing material	Polycarbonate fiber reinforced Aluminum/steel sheet DC01
MAC address table	2k
MTTF	58 Years (MIL-HDBK-217F standard, temperature 25°C, operating cycle 100%)
MTTF	521.3 Years (SN 29500 standard, temperature 25°C, operating cycle 21%)
MTTF	583.5 Years (Telcordia standard, 25°C temperature, 21% operating cycle (5 days a week, 8 hours a day))

Connection data	
Connection method	Push-in spring connection
Pluggable	Yes
Conductor cross section solid min.	0.2 mm²
Conductor cross section solid max.	2.5 mm²
Conductor cross section flexible min.	0.2 mm²
Conductor cross section flexible max.	2.5 mm²
Conductor cross section AWG min.	24
Conductor cross section AWG max.	12
Stripping length	10 mm

Interface: Ethernet (RJ45)	
Number of interfaces	8
Connection method	RJ45
Note on the connection method	Auto negotiation and autocrossing
Transmission physics	Ethernet in RJ45 twisted pair
Transmission speed	10/100 Mbps
Transmission length	100 m (per segment)

Supply voltage	
Supply voltage	24 V
Residual ripple	3.6 V_{PP} (within the permitted voltage range)
Supply voltage range	9 V DC ... 32 V DC
Typical current consumption	95 mA
Max. current consumption	7 A

Mechanical tests	
Mechanical tests	Free fall in accordance with EN 61131-2
Vibration (operation)	in acc. with IEC 60068-2-6: 5g, 150 Hz
Vibration (storage/transport)	in acc. with IEC 60068-2-6: 5g, 150 Hz
Shock (operation)	30g (EN 60068-2-27)

Conformity with EMC directives	
Electromagnetic compatibility	Conformance with EMC Directive 2014/30/EU
Conducted noise emission	EN 61000-6-2 EN 55032 Class A
Interference emission	EN 61000-6-2 EN 61000-4-8 (electromagnetic fields) Criterion A
Immunity to burst	EN 61000-6-2 EN 61000-4-4 (EFT burst) Criterion A
Immunity to EF	EN 61000-6-2 EN 61000-4-3 (electromagnetic fields) Criterion A
Immunity to ESD	EN 61000-6-2 EN 61000-4-2 (ESD) Criterion B
Immunity to surge	EN 61000-6-2 EN 61000-4-5 (surge) Criterion B
Immunity to conducted interference	EN 61000-6-2 EN 61000-4-6 (line noise immunity) Criterion A

Approvals/Certificates	
UL, USA/Canada	UL 61010-1

5.28 FL SWITCH 1008NTC (Order No. 1085156)

Dimensions (nominal sizes in mm)	
Width	22.5 mm
Height	140.4 mm
Depth	92.4 mm

Ambient conditions	
Degree of protection	IP30
Ambient temperature (operation)	-40°C ... 75°C
Ambient temperature (storage/transport)	-40°C ... 85°C
Permissible humidity (operation)	5% ... 95% (non-condensing)
Permissible humidity (storage/transport)	5% ... 95% (non-condensing)
Air pressure (operation)	79 kPa ... 108 kPa up to 2000 m above mean sea level (Without derating)
Air pressure (storage/transport)	79 kPa ... 108 kPa up to 2000 m above mean sea level (Without derating)

General data	
Mounting type	DIN rail
Weight	266 g
Housing material	Polycarbonate fiber reinforced Aluminum/steel sheet DC01
MAC address table	2k
MTTF	133.6 Years (MIL-HDBK-217F standard, temperature 25°C, operating cycle 100%)
MTTF	1254 Years (SN 29500 standard, temperature 25°C, operating cycle 21%)
MTTF	1203.8 Years (Telcordia standard, 25°C temperature, 21% operating cycle (5 days a week, 8 hours a day))

Connection data	
Connection method	Push-in spring connection
Pluggable	Yes
Conductor cross section solid min.	0.2 mm²
Conductor cross section solid max.	2.5 mm²
Conductor cross section flexible min.	0.2 mm²
Conductor cross section flexible max.	2.5 mm²
Conductor cross section AWG min.	24
Conductor cross section AWG max.	12
Stripping length	10 mm

Interface: Ethernet (RJ45)	
Number of interfaces	8
Connection method	RJ45
Note on the connection method	Auto negotiation and autocrossing
Transmission physics	Ethernet in RJ45 twisted pair
Transmission speed	10/100 Mbps
Transmission length	100 m (per segment)

Supply voltage	
Supply voltage	24 V
Residual ripple	3.6 V_{PP} (within the permitted voltage range)
Supply voltage range	9 V DC ... 32 V DC
Typical current consumption	26 mA
Max. current consumption	57 mA

Mechanical tests	
Mechanical tests	Free fall in accordance with EN 61131-2
Vibration (operation)	in acc. with IEC 60068-2-6: 5g, 150 Hz
Vibration (storage/transport)	in acc. with IEC 60068-2-6: 5g, 150 Hz
Shock (operation)	30g (EN 60068-2-27)

Conformity with EMC directives	
Electromagnetic compatibility	Conformance with EMC Directive 2014/30/EU
Conducted noise emission	EN 61000-6-2 EN 55032 Class A
Interference emission	EN 61000-6-2 EN 61000-4-8 (electromagnetic fields) Criterion A
Immunity to burst	EN 61000-6-2 EN 61000-4-4 (EFT burst) Criterion A
Immunity to EF	EN 61000-6-2 EN 61000-4-3 (electromagnetic fields) Criterion A
Immunity to ESD	EN 61000-6-2 EN 61000-4-2 (ESD) Criterion B
Immunity to surge	EN 61000-6-2 EN 61000-4-5 (surge) Criterion B
Immunity to conducted interference	EN 61000-6-2 EN 61000-4-6 (line noise immunity) Criterion A

5.29 FL SWITCH 1005NTC (Order No. 1085161)

Dimensions (nominal sizes in mm)	
Width	22.5 mm
Height	123 mm
Depth	84 mm

Ambient conditions	
Degree of protection	IP30
Ambient temperature (operation)	-40°C ... 75°C
Ambient temperature (storage/transport)	-40°C ... 85°C
Permissible humidity (operation)	5% ... 95% (non-condensing)
Permissible humidity (storage/transport)	5% ... 95% (non-condensing)
Air pressure (operation)	79 kPa ... 108 kPa up to 2000 m above mean sea level (Without derating)
Air pressure (storage/transport)	79 kPa ... 108 kPa up to 2000 m above mean sea level (Without derating)

General data	
Mounting type	DIN rail
Weight	222 g
Housing material	Polycarbonate fiber reinforced Aluminum/steel sheet DC01
MAC address table	2k
MTTF	173.1 Years (MIL-HDBK-217F standard, temperature 25°C, operating cycle 100%)
MTTF	1627.3 Years (SN 29500 standard, temperature 25°C, operating cycle 21%)
MTTF	1538.9 Years (Telcordia standard, 25°C temperature, 21% operating cycle (5 days a week, 8 hours a day))

Connection data	
Connection method	Push-in spring connection
Pluggable	Yes
Conductor cross section solid min.	0.2 mm²
Conductor cross section solid max.	2.5 mm²
Conductor cross section flexible min.	0.2 mm²
Conductor cross section flexible max.	2.5 mm²
Conductor cross section AWG min.	24
Conductor cross section AWG max.	12
Stripping length	10 mm

Interface: Ethernet (RJ45)	
Number of interfaces	5
Connection method	RJ45
Note on the connection method	Auto negotiation and autocrossing
Transmission physics	Ethernet in RJ45 twisted pair
Transmission speed	10/100 Mbps
Transmission length	100 m (per segment)

Supply voltage	
Supply voltage	24 V
Residual ripple	3.6 V_{PP} (within the permitted voltage range)
Supply voltage range	9 V DC ... 32 V DC
Typical current consumption	55 mA
Max. current consumption	153 mA

Mechanical tests	
Mechanical tests	Free fall in accordance with EN 61131-2
Vibration (operation)	in acc. with IEC 60068-2-6: 5g, 150 Hz
Vibration (storage/transport)	in acc. with IEC 60068-2-6: 5g, 150 Hz
Shock (operation)	30g (EN 60068-2-27)

Conformity with EMC directives	
Electromagnetic compatibility	Conformance with EMC Directive 2014/30/EU
Conducted noise emission	EN 61000-6-2 EN 55032 Class A
Interference emission	EN 61000-6-2 EN 61000-4-8 (electromagnetic fields) Criterion A
Immunity to burst	EN 61000-6-2 EN 61000-4-4 (EFT burst) Criterion A
Immunity to EF	EN 61000-6-2 EN 61000-4-3 (electromagnetic fields) Criterion A
Immunity to ESD	EN 61000-6-2 EN 61000-4-2 (ESD) Criterion B
Immunity to surge	EN 61000-6-2 EN 61000-4-5 (surge) Criterion B
Immunity to conducted interference	EN 61000-6-2 EN 61000-4-6 (line noise immunity) Criterion A

5.30 FL SWITCH 1005N-28PK (Order No. 1544302)

Dimensions (nominal sizes in mm)	
Width	22.5 mm
Height	117 mm
Depth	84 mm

Ambient conditions	
Degree of protection	IP30
Ambient temperature (operation)	-10°C ... 60°C
Ambient temperature (storage/transport)	-40°C ... 85°C
Permissible humidity (operation)	5% ... 95% (non-condensing)
Permissible humidity (storage/transport)	5% ... 95% (non-condensing)
Air pressure (operation)	79 kPa ... 108 kPa up to 2000 m above mean sea level (Without derating)
Air pressure (storage/transport)	79 kPa ... 108 kPa up to 2000 m above mean sea level (Without derating)
Free from substances that could impair the application of coating	In acc. with VW specification

General data	
Mounting type	DIN rail
Weight	129.9 g
Housing material	Polycarbonate fiber reinforced
MAC address table	2k
MTTF	167.2 Years (MIL-HDBK-217F standard, temperature 25°C, operating cycle 100%)
MTTF	1627 Years (SN 29500 standard, temperature 25°C, operating cycle 21%)
MTTF	1526 Years (Telcordia standard, 25°C temperature, 21% operating cycle (5 days a week, 8 hours a day))

Connection data	
Connection method	Push-in spring connection
Pluggable	Yes
Conductor cross section solid min.	0.2 mm²
Conductor cross section solid max.	2.5 mm²
Conductor cross section flexible min.	0.2 mm²
Conductor cross section flexible max.	2.5 mm²
Conductor cross section AWG min.	24
Conductor cross section AWG max.	12
Stripping length	10 mm

Interface: Ethernet (RJ45)	
Number of interfaces	5
Connection method	RJ45
Note on the connection method	Auto negotiation and autocrossing
Transmission physics	Ethernet in RJ45 twisted pair
Transmission speed	10/100 Mbps
Transmission length	100 m (per segment)

Supply voltage	
Supply voltage	24 V DC
Residual ripple	3.6 V_{PP} (within the permitted voltage range)
Supply voltage range	9 V DC ... 32 V DC
Typical current consumption	19 mA
Max. current consumption	110 mA

Mechanical tests	
Mechanical tests	Free fall in accordance with EN 61131-2
Vibration (operation)	in acc. with IEC 60068-2-6: 5g, 150 Hz
Vibration (storage/transport)	in acc. with IEC 60068-2-6: 5g, 150 Hz
Shock (operation)	30g (EN 60068-2-27)

Conformity with EMC directives	
Electromagnetic compatibility	Conformance with EMC Directive 2014/30/EU
Conducted noise emission	EN 61000-6-2 EN 55032 Class A
Interference emission	EN 61000-6-2 EN 61000-4-8 (electromagnetic fields) Criterion A
Immunity to burst	EN 61000-6-2 EN 61000-4-4 (EFT burst) Criterion A
Immunity to EF	EN 61000-6-2 EN 61000-4-3 (electromagnetic fields) Criterion A
Immunity to ESD	EN 61000-6-2 EN 61000-4-2 (ESD) Criterion B
Immunity to surge	EN 61000-6-2 EN 61000-4-5 (surge) Criterion B
Immunity to conducted interference	EN 61000-6-2 EN 61000-4-6 (line noise immunity) Criterion A

Approvals/Certificates	
UL, USA/Canada	UL 61010-1, UL 61010-2-201 Class I, Div. 2, Groups A, B, C, D, T4 Class I, Zone 2, Group IIC, T4
Further approvals	cUL Listed, EAC, KC, UL Listed, IECEE CB Scheme

5.31 FL SWITCH 1100-5POE-2SFP (Order No. 1342621)

Dimensions (nominal sizes in mm)	
Width	65 mm
Height	140.4 mm
Depth	107 mm

Ambient conditions	
Degree of protection	IP30
Ambient temperature (operation)	-10°C ... 60°C
Ambient temperature (storage/transport)	-40°C ... 85°C
Permissible humidity (operation)	5% ... 95% (non-condensing)
Permissible humidity (storage/transport)	5% ... 95% (non-condensing)
Air pressure (operation)	79 kPa ... 108 kPa up to 2000 m above mean sea level (Without derating)
Air pressure (storage/transport)	79 kPa ... 108 kPa up to 2000 m above mean sea level (Without derating)

General data	
Mounting type	DIN rail
Weight	
Housing material	Polycarbonate fiber reinforced Aluminum/steel sheet DC01
MAC address table	
MTTF	44.5 Years (MIL-HDBK-217F standard, temperature 25°C, operating cycle 100%)
MTTF	656.5 Years (SN 29500 standard, temperature 25°C, operating cycle 21%)
MTTF	460.9 Years (Telcordia standard, 25°C temperature, 21% operating cycle (5 days a week, 8 hours a day))

Connection data	
Connection method	Push-in spring connection
Pluggable	Yes
Conductor cross section solid min.	0.2 mm²
Conductor cross section solid max.	2.5 mm²
Conductor cross section flexible min.	0.2 mm²
Conductor cross section flexible max.	2.5 mm²
Conductor cross section AWG min.	24
Conductor cross section AWG max.	12
Stripping length	10 mm

Interface: Ethernet (RJ45)	
Number of interfaces	5
Connection method	RJ45
Note on the connection method	Auto negotiation and autocrossing
Transmission physics	Ethernet in RJ45 twisted pair
Transmission speed	10/100/1000 Mbps
Transmission length	100 m (per segment)

Supply voltage	
Supply voltage	48 V
Residual ripple	3.6 V_{PP} (within the permitted voltage range)
Supply voltage range	46 V DC ... 57 V DC
Typical current consumption	57 mA
Max. current consumption	6 A

Mechanical tests	
Mechanical tests	Free fall in accordance with EN 61131-2
Vibration (operation)	in acc. with IEC 60068-2-6: 5g, 150 Hz
Vibration (storage/transport)	in acc. with IEC 60068-2-6: 5g, 150 Hz
Shock (operation)	30g (EN 60068-2-27)

Conformity with EMC directives	
Electromagnetic compatibility	Conformance with EMC Directive 2014/30/EU
Conducted noise emission	EN 61000-6-2 EN 55032 Class A
Interference emission	EN 61000-6-2 EN 61000-4-8 (electromagnetic fields) Criterion A
Immunity to burst	EN 61000-6-2 EN 61000-4-4 (EFT burst) Criterion A
Immunity to EF	EN 61000-6-2 EN 61000-4-3 (electromagnetic fields) Criterion A
Immunity to ESD	EN 61000-6-2 EN 61000-4-2 (ESD) Criterion B
Immunity to surge	EN 61000-6-2 EN 61000-4-5 (surge) Criterion B
Immunity to conducted interference	EN 61000-6-2 EN 61000-4-6 (line noise immunity) Criterion A

Approvals/Certificates
UL, USA/Canada

5.32 FL SWITCH 1000-8POE (Order No. 1342622)

Dimensions (nominal sizes in mm)	
Width	65 mm
Height	140.4 mm
Depth	107 mm

Ambient conditions	
Degree of protection	IP30
Ambient temperature (operation)	-10°C ... 60°C
Ambient temperature (storage/transport)	-40°C ... 85°C
Permissible humidity (operation)	5% ... 95% (non-condensing)
Permissible humidity (storage/transport)	5% ... 95% (non-condensing)
Air pressure (operation)	79 kPa ... 108 kPa up to 2000 m above mean sea level (Without derating)
Air pressure (storage/transport)	79 kPa ... 108 kPa up to 2000 m above mean sea level (Without derating)

General data	
Mounting type	DIN rail
Weight	
Housing material	Polycarbonate fiber reinforced Aluminum/steel sheet DC01
MAC address table	
MTTF	44.9 Years (MIL-HDBK-217F standard, temperature 25°C, operating cycle 100%)
MTTF	454.1 Years (SN 29500 standard, temperature 25°C, operating cycle 21%)
MTTF	432.2 Years (Telcordia standard, 25°C temperature, 21% operating cycle (5 days a week, 8 hours a day))

Connection data	
Connection method	Push-in spring connection
Pluggable	Yes
Conductor cross section solid min.	0.2 mm²
Conductor cross section solid max.	2.5 mm²
Conductor cross section flexible min.	0.2 mm²
Conductor cross section flexible max.	2.5 mm²
Conductor cross section AWG min.	24
Conductor cross section AWG max.	12
Stripping length	10 mm

Interface: Ethernet (RJ45)	
Number of interfaces	8
Connection method	RJ45
Note on the connection method	Auto negotiation and autocrossing
Transmission physics	Ethernet in RJ45 twisted pair
Transmission speed	10/100 Mbps
Transmission length	100 m (per segment)

Supply voltage	
Supply voltage	48 V
Residual ripple	3.6 V_{PP} (within the permitted voltage range)
Supply voltage range	46 V DC ... 57 V DC
Typical current consumption	58 mA
Max. current consumption	5.5 A

Mechanical tests	
Mechanical tests	Free fall in accordance with EN 61131-2
Vibration (operation)	in acc. with IEC 60068-2-6: 5g, 150 Hz
Vibration (storage/transport)	in acc. with IEC 60068-2-6: 5g, 150 Hz
Shock (operation)	30g (EN 60068-2-27)

Conformity with EMC directives	
Electromagnetic compatibility	Conformance with EMC Directive 2014/30/EU
Conducted noise emission	EN 61000-6-2 EN 55032 Class A
Interference emission	EN 61000-6-2 EN 61000-4-8 (electromagnetic fields) Criterion A
Immunity to burst	EN 61000-6-2 EN 61000-4-4 (EFT burst) Criterion A
Immunity to EF	EN 61000-6-2 EN 61000-4-3 (electromagnetic fields) Criterion A
Immunity to ESD	EN 61000-6-2 EN 61000-4-2 (ESD) Criterion B
Immunity to surge	EN 61000-6-2 EN 61000-4-5 (surge) Criterion B
Immunity to conducted interference	EN 61000-6-2 EN 61000-4-6 (line noise immunity) Criterion A

Approvals/Certificates
UL, USA/Canada

5.33 FL SWITCH 1100-8POE (Order No. 1343034)

Dimensions (nominal sizes in mm)	
Width	65 mm
Height	140.4 mm
Depth	107 mm

Ambient conditions	
Degree of protection	IP30
Ambient temperature (operation)	-10°C ... 60°C
Ambient temperature (storage/transport)	-40°C ... 85°C
Permissible humidity (operation)	5% ... 95% (non-condensing)
Permissible humidity (storage/transport)	5% ... 95% (non-condensing)
Air pressure (operation)	79 kPa ... 108 kPa up to 2000 m above mean sea level (Without derating)
Air pressure (storage/transport)	79 kPa ... 108 kPa up to 2000 m above mean sea level (Without derating)

General data	
Mounting type	DIN rail
Weight	
Housing material	Polycarbonate fiber reinforced Aluminum/steel sheet DC01
MAC address table	
MTTF	44.9 Years (MIL-HDBK-217F standard, temperature 25°C, operating cycle 100%)
MTTF	454.1 Years (SN 29500 standard, temperature 25°C, operating cycle 21%)
MTTF	432.2 Years (Telcordia standard, 25°C temperature, 21% operating cycle (5 days a week, 8 hours a day))

Connection data	
Connection method	Push-in spring connection
Pluggable	Yes
Conductor cross section solid min.	0.2 mm²
Conductor cross section solid max.	2.5 mm²
Conductor cross section flexible min.	0.2 mm²
Conductor cross section flexible max.	2.5 mm²
Conductor cross section AWG min.	24
Conductor cross section AWG max.	12
Stripping length	10 mm

Interface: Ethernet (RJ45)	
Number of interfaces	8
Connection method	RJ45
Note on the connection method	Auto negotiation and autocrossing
Transmission physics	Ethernet in RJ45 twisted pair
Transmission speed	10/100/1000 Mbps
Transmission length	100 m (per segment)

Supply voltage	
Supply voltage	48 V
Residual ripple	3.6 V_{PP} (within the permitted voltage range)
Supply voltage range	46 V DC ... 57 V DC
Typical current consumption	57 mA
Max. current consumption	6 A

Mechanical tests	
Mechanical tests	Free fall in accordance with EN 61131-2
Vibration (operation)	in acc. with IEC 60068-2-6: 5g, 150 Hz
Vibration (storage/transport)	in acc. with IEC 60068-2-6: 5g, 150 Hz
Shock (operation)	30g (EN 60068-2-27)

Conformity with EMC directives	
Electromagnetic compatibility	Conformance with EMC Directive 2014/30/EU
Conducted noise emission	EN 61000-6-2 EN 55032 Class A
Interference emission	EN 61000-6-2 EN 61000-4-8 (electromagnetic fields) Criterion A
Immunity to burst	EN 61000-6-2 EN 61000-4-4 (EFT burst) Criterion A
Immunity to EF	EN 61000-6-2 EN 61000-4-3 (electromagnetic fields) Criterion A
Immunity to ESD	EN 61000-6-2 EN 61000-4-2 (ESD) Criterion B
Immunity to surge	EN 61000-6-2 EN 61000-4-5 (surge) Criterion B
Immunity to conducted interference	EN 61000-6-2 EN 61000-4-6 (line noise immunity) Criterion A

Approvals/Certificates
UL, USA/Canada

5.34 FL SWITCH 1100T-8POE-2SFP (Order No. 1467018)

Dimensions (nominal sizes in mm)	
Width	65 mm
Height	140.4 mm
Depth	107 mm

Ambient conditions	
Degree of protection	IP30
Ambient temperature (operation)	-40°C ... 70°C
Ambient temperature (storage/transport)	-40°C ... 85°C
Permissible humidity (operation)	5% ... 95% (non-condensing)
Permissible humidity (storage/transport)	5% ... 95% (non-condensing)
Air pressure (operation)	79 kPa ... 108 kPa up to 2000 m above mean sea level (Without derating)
Air pressure (storage/transport)	79 kPa ... 108 kPa up to 2000 m above mean sea level (Without derating)

General data	
Mounting type	DIN rail
Weight	
Housing material	Polycarbonate fiber reinforced Aluminum/steel sheet DC01
MAC address table	
MTTF	44.9 Years (MIL-HDBK-217F standard, temperature 25°C, operating cycle 100%)
MTTF	454.1 Years (SN 29500 standard, temperature 25°C, operating cycle 21%)
MTTF	432.2 Years (Telcordia standard, 25°C temperature, 21% operating cycle (5 days a week, 8 hours a day))

Connection data	
Connection method	Push-in spring connection
Pluggable	Yes
Conductor cross section solid min.	0.2 mm²
Conductor cross section solid max.	2.5 mm²
Conductor cross section flexible min.	0.2 mm²
Conductor cross section flexible max.	2.5 mm²
Conductor cross section AWG min.	24
Conductor cross section AWG max.	12
Stripping length	10 mm

Interface: Ethernet (RJ45)	
Number of interfaces	8
Connection method	RJ45
Note on the connection method	Auto negotiation and autocrossing
Transmission physics	Ethernet in RJ45 twisted pair
Transmission speed	10/100/1000 Mbps
Transmission length	100 m (per segment)

Supply voltage	
Supply voltage	24 V
Residual ripple	3.6 V_{PP} (within the permitted voltage range)
Supply voltage range	20 V DC ... 57 V DC
Typical current consumption	157 mA
Max. current consumption	7.1 A

Mechanical tests	
Mechanical tests	Free fall in accordance with EN 61131-2
Vibration (operation)	in acc. with IEC 60068-2-6: 5g, 150 Hz
Vibration (storage/transport)	in acc. with IEC 60068-2-6: 5g, 150 Hz
Shock (operation)	30g (EN 60068-2-27)

Conformity with EMC directives	
Electromagnetic compatibility	Conformance with EMC Directive 2014/30/EU
Conducted noise emission	EN 61000-6-2 EN 55032 Class A
Interference emission	EN 61000-6-2 EN 61000-4-8 (electromagnetic fields) Criterion A
Immunity to burst	EN 61000-6-2 EN 61000-4-4 (EFT burst) Criterion A
Immunity to EF	EN 61000-6-2 EN 61000-4-3 (electromagnetic fields) Criterion A
Immunity to ESD	EN 61000-6-2 EN 61000-4-2 (ESD) Criterion B
Immunity to surge	EN 61000-6-2 EN 61000-4-5 (surge) Criterion B
Immunity to conducted interference	EN 61000-6-2 EN 61000-4-6 (line noise immunity) Criterion A

Approvals/Certificates
UL, USA/Canada

A Appendixes

A 1 List of figures

Section 2

Section 3

A 2 List of tables

Section 2

Section 3

Section 4

Please observe the following notes

General terms and conditions of use for technical documentation

Phoenix Contact reserves the right to alter, correct, and/or improve the technical documentation and the products described in the technical documentation at its own discretion and without giving prior notice, insofar as this is reasonable for the user. The same applies to any technical changes that serve the purpose of technical progress.

The receipt of technical documentation (in particular user documentation) does not constitute any further duty on the part of Phoenix Contact to furnish information on modifications to products and/or technical documentation. You are responsible to verify the suitability and intended use of the products in your specific application, in particular with regard to observing the applicable standards and regulations. All information made available in the technical data is supplied without any accompanying guarantee, whether expressly mentioned, implied or tacitly assumed.

In general, the provisions of the current standard Terms and Conditions of Phoenix Contact apply exclusively, in particular as concerns any warranty liability.

Phoenix Contact reserves the right to register its own intellectual property rights for the product identifications of Phoenix Contact products that are used here. Registration of such intellectual property rights by third parties is prohibited.

Other product identifications may be afforded legal protection, even where they may not be indicated as such.

How to contact us

Internet

Up-to-date information on Phoenix Contact products and our Terms and Conditions can be found on the Internet at:
phoenixcontact.com

Make sure you always use the latest documentation.
It can be downloaded at:
phoenixcontact.net/products

Subsidiaries

If there are any problems that cannot be solved using the documentation, please contact your Phoenix Contact subsidiary.
Subsidiary contact information is available at phoenixcontact.com.

Published by

PHOENIX CONTACT GmbH & Co. KG
Flachsmarktstraße 8
32825 Blomberg
GERMANY

PHOENIX CONTACT Development and Manufacturing, Inc.
586 Fulling Mill Road
Middletown, PA 17057
USA

Should you have any suggestions or recommendations for improvement of the contents and layout of our manuals, please send your comments to:
tecdoc@phoenixcontact.com

QUINT-ORING/24DC/2X20/1X40

Active redundancy module

Data sheet
104623_en_06

1 Description

QUINT ORING is the DIN-rail mountable active redundancy module from the QUINT POWER product range.

With the help of the redundancy module, two power supply units of the same type switched for redundancy on the output side are decoupled 100% from each other.

Redundant systems are used in plants that make particularly high demands on operational safety. The power supply units involved must be dimensioned to enable the total current requirements of all loads to be covered by one single power supply unit.

If the total requirement increases, e. g., due to additionally installed loads, and exceeds the nominal current of the power supply units, the power supply unit system is no longer redundant. A defect in the power supply unit or the wiring can also lead to loss of redundancy.

This can be detected immediately via a floating signal contact and a corresponding LED.

The Auto Current Balance (ACB) technology allows even current distribution of the load current to the connected power supply units, which decisively increases the service life of the redundant system.

Features

- low-loss decoupling of power supply units connected in parallel
- Preventive function monitoring
- Auto Current Balance technology

Make sure you always use the latest documentation.
It can be downloaded from the product at phoenixcontact.net/products.

2 Table of contents

3 Ordering data

Description	Type	Order No.	Pcs./Pkt.
Active QUINT redundancy module for DIN rail mounting with ACB technology (Active Current Balancing) and monitoring functions, input: 24 V DC, output: 24 V DC/2 x 20 A or 1 x 40 A, including mounted universal DIN rail adapter UTA 107/30	QUINT-ORING/24DC/2X20/1X40	2320186	1

Accessories	Type	Order No.	Pcs./Pkt.
Universal DIN rail adapter	UTA 107/30	2320089	100
Universal wall adapter	UWA 182/52	2938235	1
Assembly adapter for QUINT-PS... power supply on S7-300 rail	QUINT-PS-ADAPTERS7/1	2938196	1

Our range of accessories is being continually extended, our current range can be found in the download area.

4 Technical data

Input data/output data	
Nominal input voltage	24 V DC
Input voltage range	18 V DC ... 28 V DC (SELV)
Voltage drop, input/output	0.2 V (I_{OUT} = 40 A)
Nominal current	2x 20 A (-25 °C ... 60 °C) 1x 40 A (-25 °C ... 60 °C)
Maximum current	2x 26 A (-25°C ... 40°C) 1x 52 A (-25°C ... 40°C) 120 A (12 ms, SFB Technology)
Transient surge protection	Varistor
Protection against polarity reversal	Yes, < 60 V
Protective circuit	Protection against static surge voltages > 30 V
Nominal output voltage	0.2 V (< DC input)
Output current	40 A (Increasing power) 20 A (Redundancy)
Derating	60 °C ... 70 °C (2.5%/K)
Power loss nominal load max.	8 W (I_{OUT} = 40 A)
Efficiency	> 98 %
Protection against surge voltage on the output	≤ 32 V DC

Redundancy OK, 13/14	
Output description	Group contact
Voltage	max. 30 V AC/DC
Current	≤ 100 mA (short-circuit resistant)
Status display	LED redundancy OK / Green

ACB (Auto Current Balancing) OK, 23/24	
Output description	Contact closed: $\Delta U_{IN} \leq 300$ mV
Voltage	max. 30 V AC/DC
Current	≤ 100 mA (short-circuit resistant)
Status display	ACB OK LED / LED bar graph green

General data	
Insulation voltage input, output / housing	500 V
MTBF (IEC 61709, SN 29500)	> 720000 h (40°C)
Mounting position	horizontal DIN rail NS 35, EN 60715
Dimensions W/H/D	38 mm / 130 mm / 125 mm
Dimensions W / H / D (90° turned)	122 mm / 130 mm / 41 mm
Weight	0.6 kg

Security	
Degree of protection	IP20
Protection class	III
SELV	IEC 60950-1 (SELV) and EN 60204-1 (PELV)

Input connection data

Connection method	Screw connection
Conductor cross section, solid	0.2 mm² ... 6 mm²
Conductor cross section, flexible	0.2 mm² ... 4 mm²
Conductor cross section AWG	10
Stripping length	8 mm
Screw thread	M3
Tightening torque	0.5 Nm ... 0.6 Nm

Output connection data

Connection method	Screw connection
Conductor cross section, solid	0.5 mm² ... 16 mm²
Conductor cross section, flexible	0.5 mm² ... 16 mm²
Conductor cross section AWG	6
Stripping length	10 mm
Screw thread	M4
Tightening torque	1.2 Nm ... 1.5 Nm

Signal connection data

Connection method	Screw connection
Conductor cross section, solid	0.2 mm² ... 6 mm²
Conductor cross section, flexible	0.2 mm² ... 4 mm²
Conductor cross section AWG	16 ... 10
Stripping length	10 mm
Screw thread	M3
Tightening torque	0.5 Nm ... 0.6 Nm

Ambient conditions

Ambient temperature (operation)	-25 °C ... 70 °C (> 60 °C Derating: 2,5 %/K)
Ambient temperature (start-up type tested)	-40 °C
Ambient temperature (storage/transport)	-40 °C ... 85 °C
Max. permissible relative humidity (operation)	≤ 100 % (at 25 °C, non-condensing)
Vibration (operation)	< 15 Hz, amplitude ±2.5 mm (according to IEC 60068-2-6) 15 Hz ... 150 Hz, 2.3g, 90 min.
Shock	30g in each direction, according to IEC 60068-2-27
Pollution degree in acc. with EN 50178	2
Climatic class	3K3 (in acc. with EN 60721)

Standards

Electrical Equipment for Machinery	EN 60204-1
Electrical safety (of information technology equipment)	EN 60950-1/VDE 0805 (SELV)
Electronic equipment for use in electrical power installations	EN 50178/VDE 0160 (PELV)
SELV	IEC 60950-1 (SELV) and EN 60204-1 (PELV)

Approvals	
ATEX	Ⓔx II 3 G Ex nA IIC T4 Gc
IECEx	Ex nA IIC T4 Gc
UL approvals	UL/C-UL listed UL 508 UL/C-UL Recognized UL 60950 UL ANSI/ISA-12.12.01 Class I, Division 2, Groups A, B, C, D (Hazardous Location)

Current approvals/permissions for the product can be found in the download area under phoenixcontact.net/products.

Conformance with EMC Directive 2004/108/EC		
Noise immunity according to EN 61000-6-2		
	EN 61000-6-2 requirement	**Tested**
Electrostatic discharge EN 61000-4-2		
Housing contact discharge	4 kV (Test intensity 2)	8 kV (Test intensity 4)
Housing air discharge	8 kV (Test intensity 3)	15 kV (Test intensity 4)
Comments	Criterion B	Criterion B
Electromagnetic HF field EN 61000-4-3		
Frequency range	80 MHz ... 1 GHz	80 MHz ... 1 GHz
Test field strength	10 V/m (Test intensity 3)	20 V/m (Test intensity 3)
Frequency range	1.4 GHz ... 2 GHz	1 GHz ... 2 GHz
Test field strength	3 V/m (Test intensity 2)	10 V/m (Test intensity 3)
Frequency range	2 GHz ... 2.7 GHz	2 GHz ... 3 GHz
Test field strength	1 V/m (Test intensity 1)	10 V/m (Test intensity 3)
Comments	Criterion A	Criterion A
Fast transients (burst) EN 61000-4-4		
Input	2 kV (Test intensity 3 - asymmetrical)	2 kV (Test intensity 3 - asymmetrical)
Output	2 kV (Test intensity 3 - asymmetrical)	2 kV (Test intensity 3 - asymmetrical)
Signal	1 kV (Test intensity 3 - asymmetrical)	2 kV (Test intensity 4 - asymmetrical)
Comments	Criterion B	Criterion B
Surge current loads (surge) EN 61000-4-5		
Input	0.5 kV (Test intensity 1 - symmetrical) 0.5 kV (Test intensity 1 - asymmetrical)	1 kV (Test intensity 2 - symmetrical) 2 kV (Test intensity 3 - asymmetrical)
Output	0.5 kV (Test intensity 1 - symmetrical) 0.5 kV (Test intensity 1 - asymmetrical)	1 kV (Test intensity 2 - symmetrical) 2 kV (Test intensity 3 - asymmetrical)
Signal	1 kV (Test intensity 2 - asymmetrical)	1 kV (Test intensity 2 - asymmetrical)
Comments	Criterion B	Criterion B
Conducted interference EN 61000-4-6		
Input/Output/Signal	asymmetrical	asymmetrical
Frequency range	0.15 MHz ... 80 MHz	0.15 MHz ... 80 MHz
Voltage	10 V (Test intensity 3)	10 V (Test intensity 3)
Comments	Criterion A	Criterion A

Key	
Criterion A	Normal operating behavior within the specified limits.
Criterion B	Temporary impairment to operational behavior that is corrected by the device itself.

Emitted interference in acc. with EN 61000-6-3	
Radio interference voltage in acc. with EN 55011	EN 55011 (EN 55022) Class B, area of application: Industry and residential
Emitted radio interference in acc. with EN 55011	EN 55011 (EN 55022) Class B, area of application: Industry and residential

All technical specifications are nominal values and refer to a room temperature of 25 °C and 70 % relative humidity at 100 m above sea level.

5 Safety regulations and installation notes

EXPLOSION HAZARD
Only remove equipment when it is disconnected and not in the potentially explosive area!

DANGER

Never carry out work on live parts!
The housing can become very hot, depending on the ambient temperature and load!

CAUTION:

Before startup please ensure:

The connection must be carried out by a competent person and protection against electric shock guaranteed.

It must be possible to switch off power to device according to EN 60950.

All feed lines are sufficiently protected and dimensioned!

All output lines are dimensioned according to the maximum output current of the device or separately protected!

Sufficient convection must be guaranteed.

NOTE: Danger if used improperly

The redundancy module is a device installing into an enclosed space. Installation and start-up may only be carried out by qualified personnel. The relevant country-specific regulations must be observed.

6 Structure

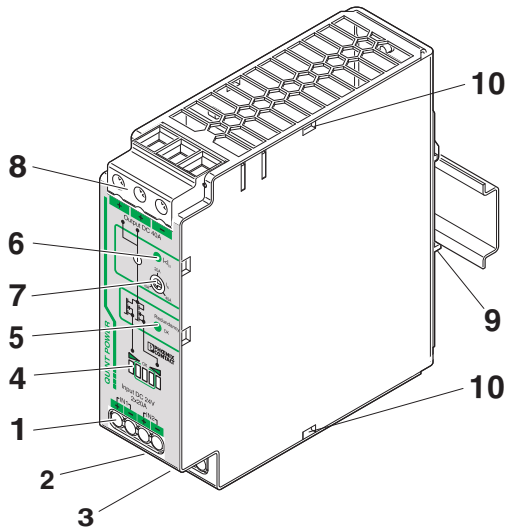

Figure 1 Function elements

1 IN1/IN2 DC input:
24 V input voltage, I_N = 2 x 20 A

2 Floating relay contact
13/14 "Redundancy OK"
(max. 30 V, 100 mA, short-circuit-proof)

3 Floating relay contact
23/24 "ACB OK"
(max. 30 V, 100 mA, short-circuit-proof)

4 Bar graph for displaying the current balance I_1/I_2

5 "Redundancy OK" LED, green

6 LED "I < I_N", green

7 Rotary selector switch for selecting the nominal current of the power supply units

8 DC output approx. 0.2 V < DC input

9 Universal snap-on foot for EN DIN rails

10 Strain relief for connecting cables

7 Basic circuit diagram

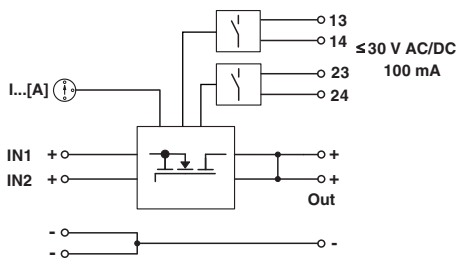

8 Installation

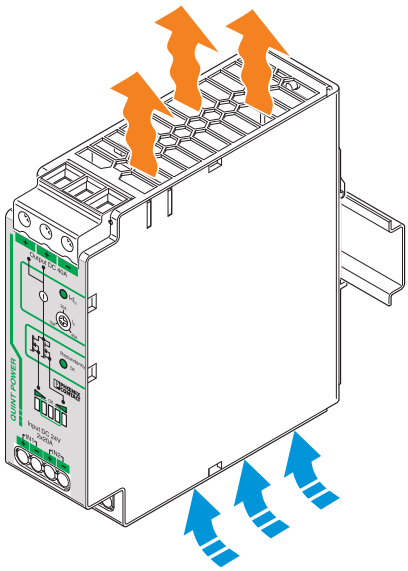

Figure 2 Convection

In order to ensure sufficient convection, we recommend a minimum vertical distance of 50 mm to the other modules.
A lateral distance of 5 mm, and in the case of active components, that of 15 mm is necessary for proper functioning of the module.
Depending on the ambient temperature and the load of the module, the housing can become very hot.

The module can be snapped onto all DIN rails according to EN 60715 and should be mounted in the normal mounting position (horizontal device orientation, connection terminal blocks on top and bottom).

9 Mounting position

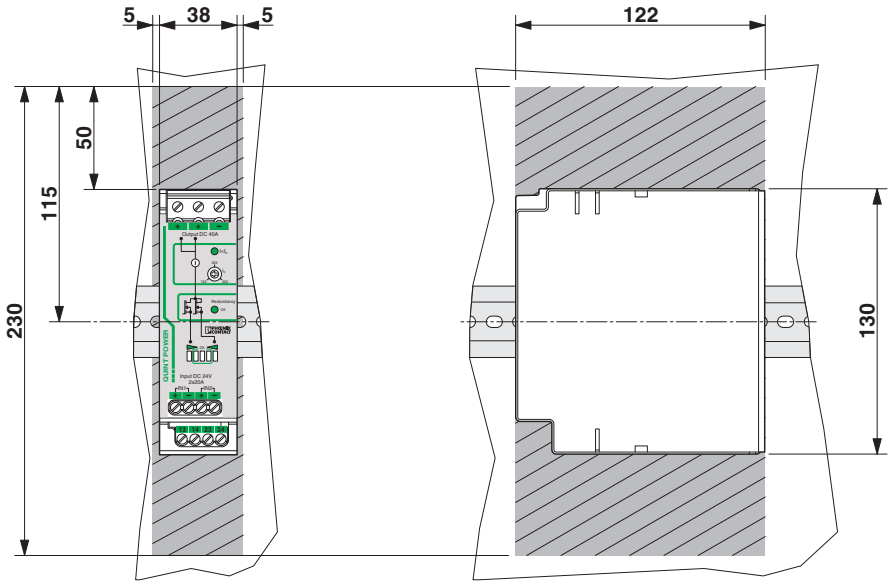

Figure 3 Installation dimensions

Possible mounting positions:

Normal mounting position, installation depth 125 mm (+ DIN rail) (delivery state)

Rotated mounting position, 270° Y-axis, installation depth: 41 mm (+ DIN rail)

10 Mounting on DIN rails

Assembly

Position the module with the DIN rail guide on the upper edge of the DIN rail, and snap it in with a downward motion.

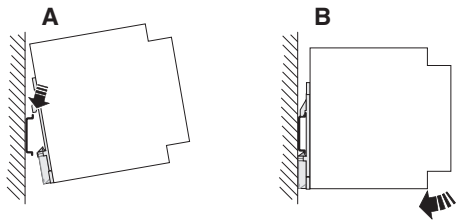

Figure 4 Assembly

Removal

Pull the snap lever open with the aid of a screwdriver and slide the module out at the lower edge of the DIN rail.

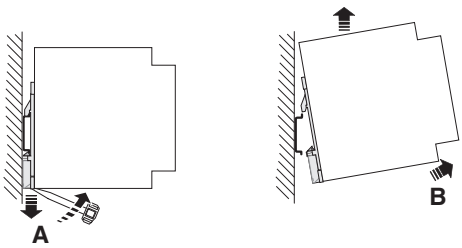

Figure 5 Removal

Rotated mounting position (270° Y-axis)

A rotated mounting position can be achieved by mounting the module onto the DIN rail at a 270° angle. Mount the DIN rail adapter (UTA 107/30) as shown in the figure. No additional assembly material is required. Mounting screws: Torx® T10 (0.8 Nm ... 0.9 Nm tightening torque).

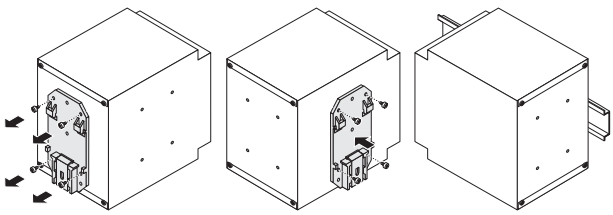

Figure 6 Rotated mounting position (270° Y-axis)

Other mounting positions are also possible. Always observe position-dependent derating.

11 Input

Connection of the input is made via connection terminal blocks "In1+" and "In2+".

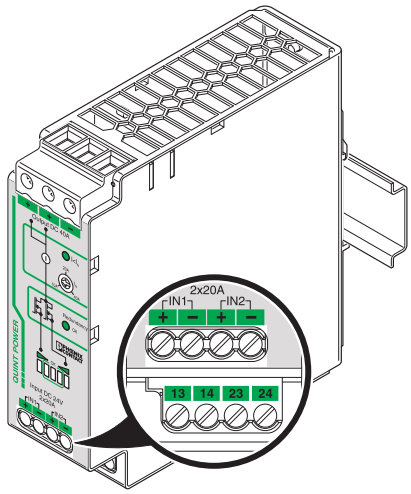

Figure 7 Input

Protection of the primary side

The maximum current for each input is 26 A.

Therefore use a current-limited source (e. g., QUINT POWER) or a suitable fuse.

12 Output

Connection of the output takes place via the internally connected "+" terminals and the "-" terminal.

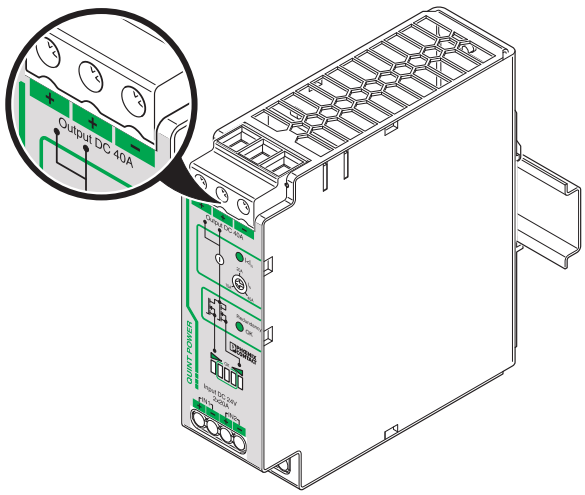

Figure 8 Output

13 Signaling

The "Redundancy OK" (13/14) and "ACB OK" (23/24) floating signal contacts are available for function monitoring.

In addition, the "Redundancy OK" and "$I < I_N$" LEDs as well as the bar graph allow onsite function evaluation of the redundancy module.

To monitor the redundancy, the nominal current of the upstream power supply units can be set on the redundancy module using the rotary selection switch

The following table shows the possible states.

a) OK		b) OK	I < IN	Redundancy OK		ACB OK	Description
			LED	LED	Relay 13/14	Relay 23/24	
rd ye gr ye rd	or	rd ye gr ye rd	●	●	closed	closed	Redundancy OK, load distribution OK
	or		●	●	closed	closed	Redundancy OK Load distribution OK by ACB however, power supply not optimally adjusted a) increase voltage at IN2 or decrease voltage at IN1 b) increase voltage at IN1 or decrease voltage at IN2
	or		●	●	closed	open	Redundancy OK No load distribution because power supply not adjusted a) increase voltage at IN2 or decrease voltage at IN1 b) increase voltage at IN1 or decrease voltage at IN2
X	or	X	✳	✳	open	X	No redundancy because I>In Verify load current
	or		●	✳	open	open	No redundancy because an input is not being supplied with power a) Check input IN2 and its connections b) Check input IN1 and its connections
	or		○	○	open	open	Short circuit at output of the redundancy module or Device is not being supplied with power
X X X X	or	X X X X	X	✳	open	X	If a red LED lights up permanently, the device must be checked by the manufacturer.

LED flashing LED on LED off X Not relevant

Figure 9 Signaling

13.1 "Redundancy OK" floating signal contact

The floating signal contact reports the loss of redundancy by opening.

The following causes are possible:

- The decoupled component is defective.
- At least one input voltage is too low or does not exist.
- If the load current is higher that the set threshold value of I_N , a single power supply unit can no longer sustain the load. This is reported after 4 seconds.

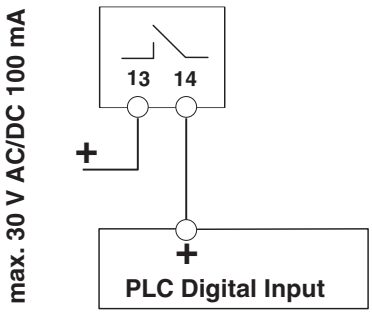

13.2 "ACB OK" floating signal contact

The floating signal contact opens and reports that the load current is not distributed symmetrically on both parallel connected power supply units.

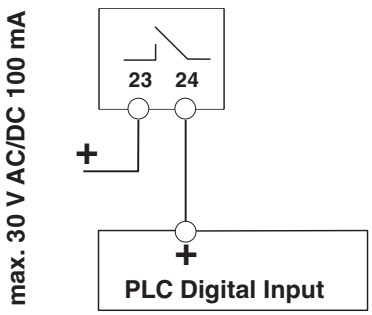

14 Function

The redundancy module decouples the outputs of two power supply units and ensures safe redundancy.

14.1 Input/output

Only one redundancy module is required for decoupling two power supply units 1 and 2 switched in parallel with nominal currents of up to 20 A.

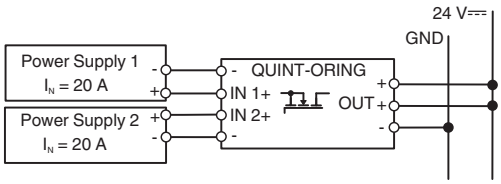

14.2 ACB technology

The service life of the redundantly operated power supply unit can be doubled by the Auto Current Balance (ACB) technology, which evenly loads both power supply units. The load current is automatically distributed symmetrically. Use connection cables of the same length and cross section.

14.3 Protection against static surge voltage

The IN 1 and IN 2 inputs are equipped with a protective circuit that is triggered in the event of static surge voltages >30 V. Two input voltages must be present that are independent of each other. Two-fold error safety against surge voltages can therefore ensured in a system with QUINT POWER power supply units.

15 Derating

15.1 Temperature response

The active redundancy module can be operated with a maximum current of 2 x 26 A up to an ambient temperature up to +40 °C. In the case of ambient temperatures up to +60 °C, the device can be operated continually with the nominal current. In the case of ambient temperatures of more than +60 °C, the output power must be reduced by 2.5 % for each Kelvin increase of temperature. In the case of ambient temperatures of more than +70 °C or thermal overload, the device is not switched off. Reduce the output power enough to ensure protection of the device.
When using the QUINT POWER (20 A) power supply unit, the derating curve is maintained automatically.

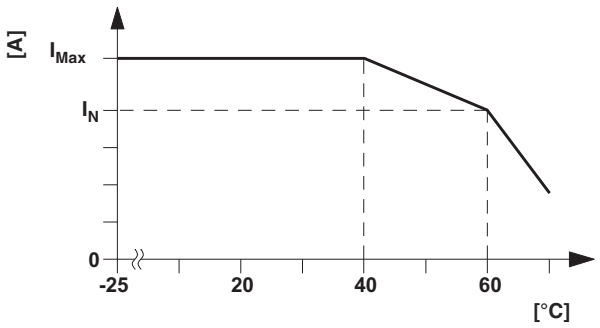

Figure 10 Derating diagram

15.2 Position-dependent derating

The redundancy module can be snapped onto all DIN rails according to EN 60715. It should be mounted horizontally in the normal mounting position (with the input terminals facing downward).

When installing in a different mounting position, derating should be adhered to.

The characteristic curve can be used to determine the maximal output power to be drawn for each ambient temperature for different mounting positions.

Normal mounting position

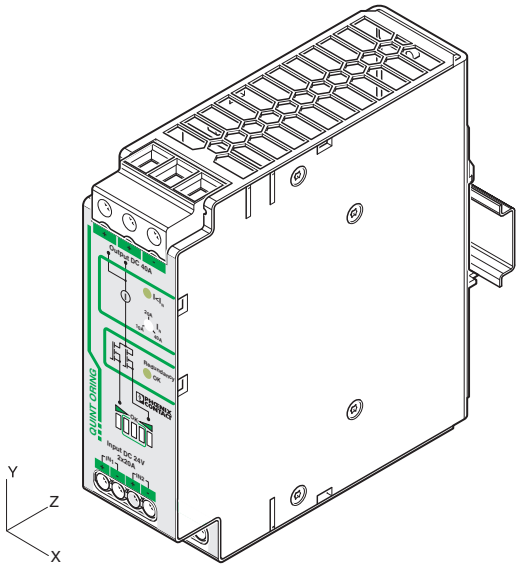

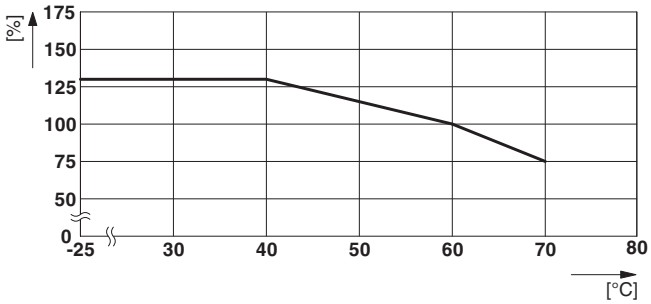

Rotated mounting position 90° X-axis

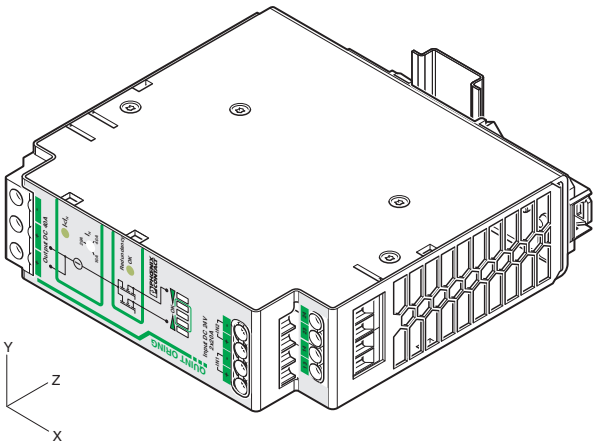

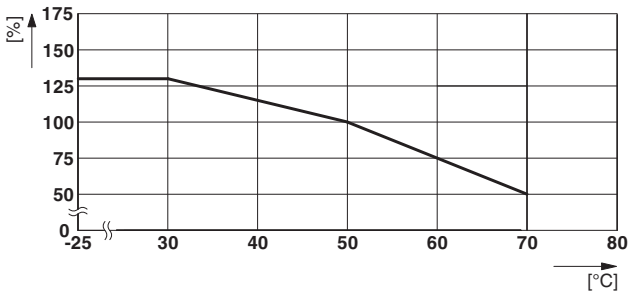

Rotated mounting position 180° X-axis

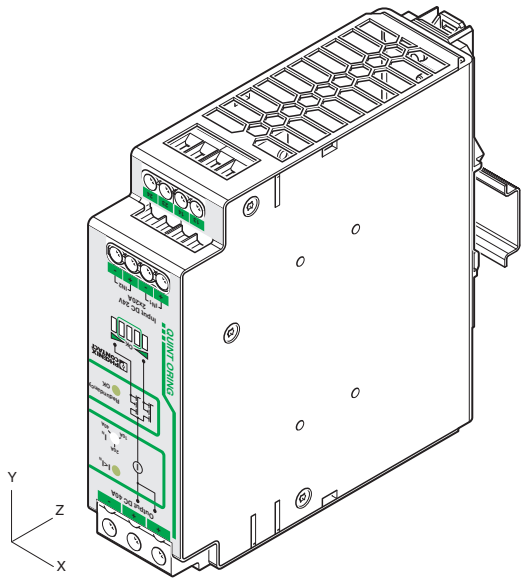

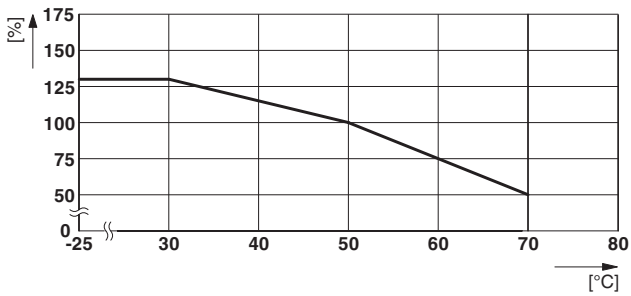

Rotated mounting position 270° X-axis

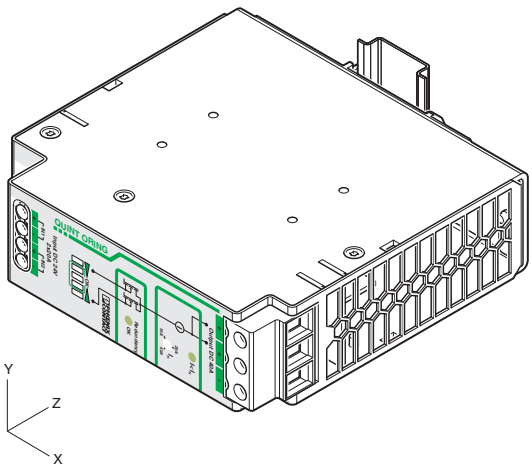

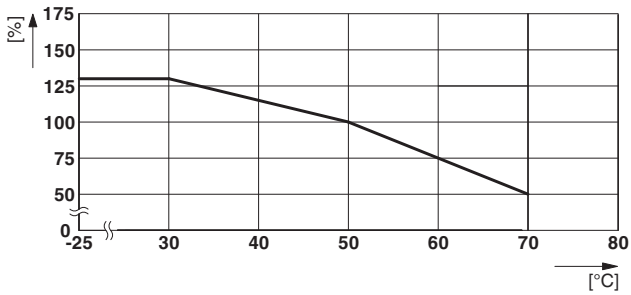

Rotated mounting position 90° Z-axis

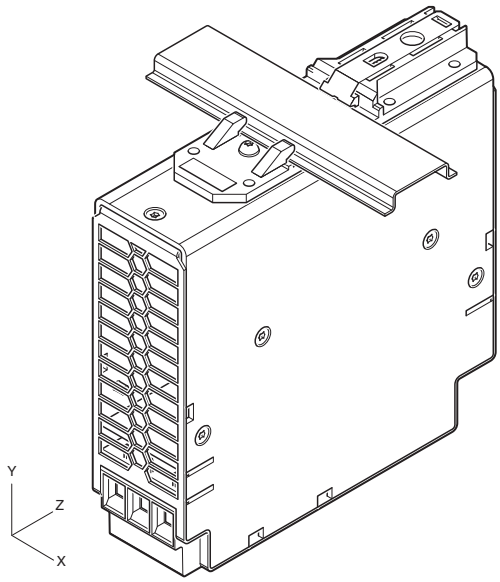

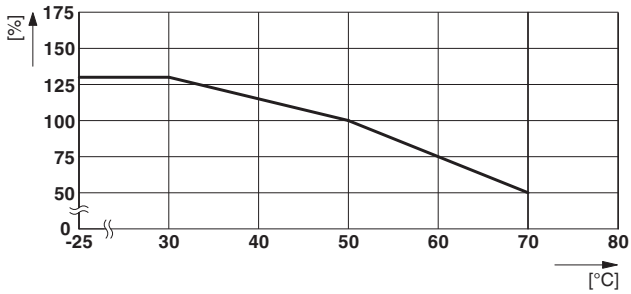

Rotated mounting position 270° Z-axis

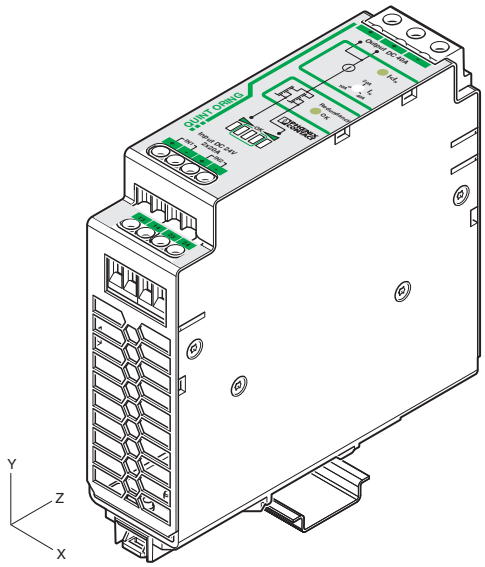

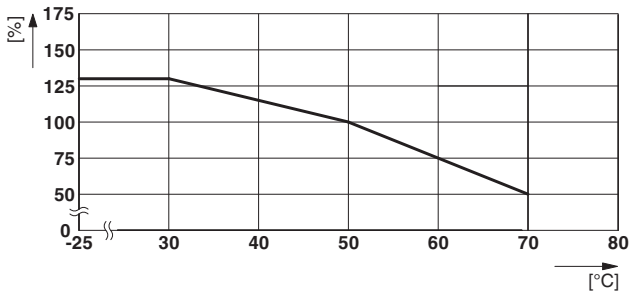

QUINT-PS/1AC/24DC/20

Power supply unit

Data sheet
103129_en_07

1 Description

QUINT POWER power supply units – Superior system availability with SFB technology
Compact power supply units of the new QUINT POWER generation maximize the availability of your system. With the SFB technology (Selective Fuse Breaking Technology), six times the nominal current for 12 ms, even the standard power circuit-breakers can now also be triggered reliably and quickly. Faulty current paths are switched off selectively, the fault is located and important system parts continue to operate. Comprehensive diagnostics are provided through constant monitoring of output voltage and current. This preventive function monitoring visualizes critical operating modes and reports them to the control unit before an error can occur.

Features

Superior system availability

- Using SFB technology (6 times the nominal current for 12 ms), circuit breakers are tripped quickly and important system parts remain in operation
- Through the preventive monitoring of output voltage and current and the transmission of critical operating states to the controller
- Through reliable starting of difficult loads with POWER BOOST power reserve
- Long mains buffering > 32 ms
- High MTBF > 520,000 h (40°C)

Worldwide use

- Input voltage from 85 V AC ... 264 V AC
- Input voltage from 90 V DC ... 350 V DC

Flexible use

- Adjustable output voltage
- Can be used in Class I, Division 2, Groups A, B, C, D (Hazardous Location) ANSI-ISA 12.12

Make sure you always use the latest documentation.
It can be downloaded from the product at phoenixcontact.net/products.

2 Table of contents

3 Ordering data

Description	Type	Order No.	Pcs./Pkt.
Primary-switched QUINT POWER power supply for DIN rail mounting with SFB (Selective Fuse Breaking) Technology, input: 1-phase, output: 24 V DC/20 A	QUINT-PS/1AC/24DC/20	2866776	1

Accessories	Type	Order No.	Pcs./Pkt.
DIN rail diode module 12-24 V DC/2x20 A or 1x40 A. Uniform redundancy up to the consumer.	QUINT-DIODE/12-24DC/2X20/1X40	2320157	1
Active QUINT redundancy module for DIN rail mounting with ACB technology (Active Current Balancing) and monitoring functions, input: 24 V DC, output: 24 V DC/2 x 20 A or 1 x 40 A, including mounted universal DIN rail adapter UTA 107/30	QUINT-ORING/24DC/2X20/1X40	2320186	1
Filter for adherence to the EMC category EMC1 in shipbuilding for the QUINT-PS/1AC/24DC/20 power supply	ME-MAX-NEF/QUINT20A	2319919	1
Thermomagnetic device circuit breaker, 1-pos., tripping characteristic SFB, 1 PDT contact, plug for base element.	CB TM1 1A SFB P	2800836	1
Thermomagnetic device circuit breaker, 1-pos., tripping characteristic SFB, 1 PDT contact, plug for base element.	CB TM1 2A SFB P	2800837	1
Thermomagnetic device circuit breaker, 1-pos., tripping characteristic SFB, 1 PDT contact, plug for base element.	CB TM1 3A SFB P	2800838	1
Thermomagnetic device circuit breaker, 1-pos., tripping characteristic SFB, 1 PDT contact, plug for base element.	CB TM1 4A SFB P	2800839	1
Thermomagnetic device circuit breaker, 1-pos., tripping characteristic SFB, 1 PDT contact, plug for base element.	CB TM1 5A SFB P	2800840	1
Thermomagnetic device circuit breaker, 1-pos., tripping characteristic SFB, 1 PDT contact, plug for base element.	CB TM1 6A SFB P	2800841	1
Thermomagnetic device circuit breaker, 1-pos., tripping characteristic SFB, 1 PDT contact, plug for base element.	CB TM1 8A SFB P	2800842	1
Thermomagnetic device circuit breaker, 1-pos., tripping characteristic SFB, 1 PDT contact, plug for base element.	CB TM1 10A SFB P	2800843	1
Universal wall adapter	UWA 182/52	2938235	1
Universal DIN rail adapter	UTA 107	2853983	5
The fan for QUINT-PS/1AC and .../3AC can be mounted without the need for tools or other accessories. By using the fan, optimum cooling is ensured at high ambient temperatures or if the mounting position is rotated.	QUINT-PS/FAN/4	2320076	1

Our range of accessories is being continually extended, our current range can be found in the download area.

4 Technical data

Input data	
Nominal input voltage	100 V AC ... 240 V AC
Input voltage range	85 V AC ... 264 V AC
Short-term input voltage	300 V AC
Input voltage range	90 V DC ... 350 V DC
AC frequency range	45 Hz ... 65 Hz
Frequency range DC	0 Hz
Current consumption	5.1 A (120 V AC) 2.3 A (230 V AC) 4.9 A (110 V DC) 2.4 A (220 V DC)
Inrush current limitation	< 20 A (typical)
I^2t	< 3.2 A^2s
Power failure bypass	> 32 ms (120 V AC) > 32 ms (230 V AC)
Typical response time	< 0.6 s
Protective circuit	Transient surge protection Varistor
Input fuse, integrated	12 A (slow-blow, internal)
Choice of suitable fuses	10 A ... 16 A (AC: Characteristics B, C, D, K)
Discharge current to PE	< 3.5 mA

Output data	
Nominal output voltage	24 V DC ±1 %
Setting range of the output voltage	18 V DC ... 29.5 V DC (> 24 V DC, constant capacity restricted)
Output current	20 A (-25°C ... 60°C, U_{OUT} = 24 V DC) 26 A (with POWER BOOST, -25°C ... 40°C permanently, U_{OUT} = 24 V DC) 120 A (SFB technology, 12 ms) 26 A (U_{In} ≥ 100 V AC)
Magnetic fuse tripping	B2 / B4 / B6 / B10 / B16 / C2 / C4 / C6
Control deviation	< 1 % (change in load, static 10 % ... 90 %) < 2 % (change in load, dynamic 10 % ... 90 %) < 0.1 % (change in input voltage ±10 %)
Efficiency	> 93 % (for 230 V AC and nominal values)
Rise time	< 0.1 s (U_{OUT} (10 % ... 90 %))
Residual ripple	< 30 mV_{PP} (with nominal values)
Connection in parallel	Yes, for redundancy and increased capacity
Connection in series	Yes
Protection against surge voltage on the output	< 35 V DC
Resistance to reverse feed	max. 35 V DC

Power consumption	
Maximum power dissipation NO-Load	8 W
Power loss nominal load max.	40 W

DC OK active	
Output description	U_{OUT} > 0.9 x U_N: High signal
Voltage/current	18 V DC ... 24 V DC / ≤ 20 mA (short-circuit resistant)
Status display	U_{OUT} > 0.9 x U_N: "DC OK" LED green / U_{OUT} < 0.9 x U_N: Flashing "DC OK" LED

DC OK floating	
Output description	Relay contact, U_{OUT} > 0.9 x U_N: Contact closed
Voltage/current	30 V AC/DC / 0.5 A , 24 V DC / 1 A
Status display	U_{OUT} > 0.9 x U_N: "DC OK" LED green / U_{OUT} < 0.9 x U_N: Flashing "DC OK" LED

POWER BOOST, active	
Output description	I_{OUT} < I_N: High signal
Voltage/current	18 V DC ... 24 V DC / ≤ 20 mA (short-circuit resistant)
Status display	I_{OUT} > I_N: LED "BOOST" yellow

General data	
Insulation voltage input/output	4 kV AC (type test) 2 kV AC (routine test)
Insulation voltage input / PE	3.5 kV AC (type test) 2 kV AC (routine test)
Insulation voltage output / PE	500 V DC (routine test)
Degree of protection	IP20
Protection class	I
MTBF (IEC 61709, SN 29500)	> 520000 h (40°C) / > 900000 h (25 °C)
Side element version	Aluminum
Hood version	Galvanized sheet steel, free from chrome (VI)
Dimensions W / H / D (state of delivery)	90 mm / 130 mm / 125 mm
Dimensions W / H / D (90° turned)	122 mm / 130 mm / 93 mm
Weight	1.7 kg

Ambient conditions	
Ambient temperature (operation)	-25 °C ... 70 °C (> 60 °C Derating: 2,5 %/K)
Ambient temperature (start-up type tested)	-40 °C
Ambient temperature (storage/transport)	-40 °C ... 85 °C
Max. permissible relative humidity (operation)	≤ 95 % (at 25 °C, non-condensing)
Maximum altitude	6000 m
Vibration (operation)	< 15 Hz, amplitude ±2.5 mm (according to IEC 60068-2-6) 15 Hz ... 150 Hz, 2.3g, 90 min.
Shock	30g in each direction, according to IEC 60068-2-27
Pollution degree in acc. with EN 60950-1	2
Climatic class	3K3 (in acc. with EN 60721)

Standards	
Electrical Equipment for Machinery	EN 60204-1
Electrical safety (of information technology equipment)	IEC 60950-1/VDE 0805 (SELV)
Electronic equipment for use in electrical power installations	EN 50178/VDE 0160 (PELV) / Overvoltage category III
SELV	IEC 60950-1 (SELV) and EN 60204-1 (PELV)
Safe isolation	DIN VDE 0100-410
Limitation of mains harmonic currents	EN 61000-3-2
Network version/undervoltage	SEMI F47-0706 Compliance Certificate
Medical standard	IEC 60601-1, 2 x MOOP
Rail applications	EN 50121-4

Approvals	
UL	UL Listed UL 508 UL/C-UL Recognized UL 60950-1 UL ANSI/ISA-12.12.01 Class I, Division 2, Groups A, B, C, D (Hazardous Location)
CSA	CAN/CSA-C22.2 No. 60950-1-07 CSA-C22.2 No. 107.1-01
SIQ	CB Scheme
Shipbuilding	Germanischer Lloyd (EMC 1, only with upstream filter), ABS, LR, RINA, NK, DNV, BV

Current approvals/permissions for the product can be found in the download area under phoenixcontact.net/products.

Conformance with EMC Directive 2004/108/EC		
Noise immunity according to EN 61000-6-2		
	EN 61000-6-2 requirement	**Tested**
Electrostatic discharge EN 61000-4-2		
Housing contact discharge	4 kV (Test intensity 2)	8 kV (Test intensity 4)
Housing air discharge	8 kV (Test intensity 3)	15 kV (Test intensity 4)
Comments	Criterion B	Criterion A
Electromagnetic HF field EN 61000-4-3		
Frequency range	80 MHz ... 1 GHz	80 MHz ... 1 GHz
Test field strength	10 V/m (Test intensity 3)	20 V/m (Test intensity 3)
Frequency range	1.4 GHz ... 2 GHz	1 GHz ... 2 GHz
Test field strength	3 V/m (Test intensity 2)	10 V/m (Test intensity 3)
Frequency range	2 GHz ... 2.7 GHz	2 GHz ... 3 GHz
Test field strength	1 V/m (Test intensity 1)	10 V/m (Test intensity 3)
Comments	Criterion A	Criterion A
Fast transients (burst) EN 61000-4-4		
Input	2 kV (Test intensity 3 - asymmetrical)	4 kV (Test intensity 4 - asymmetrical)
Output	2 kV (Test intensity 3 - asymmetrical)	2 kV (Test intensity 3 - asymmetrical)
Signal	1 kV (Test intensity 3 - asymmetrical)	2 kV (Test intensity 4 - asymmetrical)
Comments	Criterion B	Criterion A
Surge current loads (surge) EN 61000-4-5		
Input	1 kV (Test intensity 2 - symmetrical) 2 kV (Test intensity 3 - asymmetrical)	2 kV (Test intensity 3 - symmetrical) 4 kV (Test intensity 4 - asymmetrical)
Output	0.5 kV (Test intensity 1 - symmetrical) 0.5 kV (Test intensity 1 - asymmetrical)	1 kV (Test intensity 2 - symmetrical) 2 kV (Test intensity 3 - asymmetrical)
Signal	1 kV (Test intensity 2 - asymmetrical)	1 kV (Test intensity 2 - asymmetrical)
Comments	Criterion B	Criterion A
Conducted interference EN 61000-4-6		
Input/Output/Signal	asymmetrical	asymmetrical
Frequency range	0.15 MHz ... 80 MHz	0.15 MHz ... 80 MHz
Voltage	10 V (Test intensity 3)	10 V (Test intensity 3)
Comments	Criterion A	Criterion A

Key	
Criterion A	Normal operating behavior within the specified limits.
Criterion B	Temporary impairment to operational behavior that is corrected by the device itself.

Emitted interference in acc. with EN 61000-6-3	
Radio interference voltage in acc. with EN 55011	EN 55011 (EN 55022) Class B, area of application: Industry and residential
Emitted radio interference in acc. with EN 55011	EN 55011 (EN 55022) Class B, area of application: Industry and residential

All technical specifications are nominal values and refer to a room temperature of 25 °C and 70 % relative humidity at 100 m above sea level.

5 Safety regulations and installation notes

EXPLOSION HAZARD!

Only remove equipment when it is disconnected and not in the potentially explosive area.

DANGER

Components with dangerously high voltage and high stored energy are located in the device!
Never carry out work on live parts!
Depending on the ambient temperature and the load, the housing can become very hot!

CAUTION:

Before startup please ensure:

The connection must be carried out by a competent person and protection against electric shock guaranteed.

It must be possible to switch off power to device according to EN 60950.

All feed lines are sufficiently protected and dimensioned!

All output lines are dimensioned according to the maximum output current of the device or separately protected!

Sufficient convection must be guaranteed.

Observe mechanical and thermal limits.

CAUTION: Risk of injury

Cover termination area after installation in order to avoid accidental contact with live parts (e. g., installation in control cabinet).

NOTE: Danger if used improperly

The power supply units are built-in devices. The device may only be installed and put into operation by qualified personnel. The corresponding national regulations must be observed.

6 Structure

6.1 Block diagram

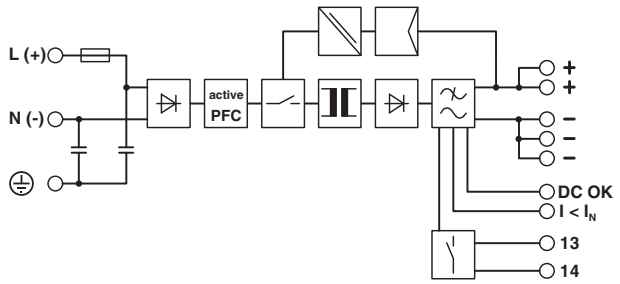

Element	Meaning
	Rectification
active PFC	Power factor correction filter
	Switch
	Electrically isolated signal transmission
	Regulation
	Transformer
	Output filter
	Floating switching output

6.2 Function elements

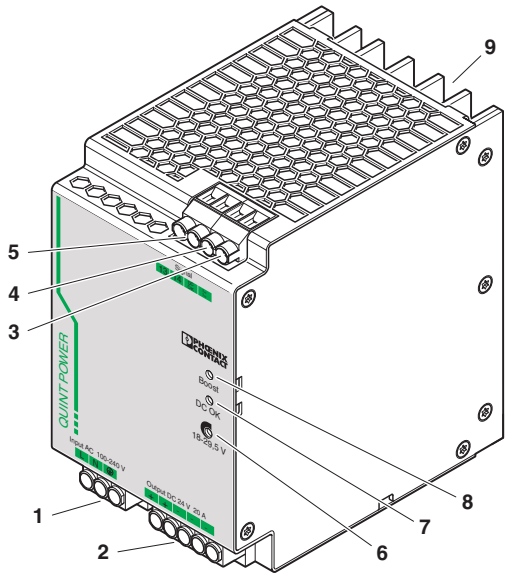

Figure 1 Position of the function elements

No.	Connection terminal blocks and function elements
1	AC input
2	DC output
3	Active signal output I < I_N (POWER BOOST)
4	Active DC OK signal output
5	Floating DC OK switching output
6	Potentiometer for setting the output voltage
7	DC OK signal LED, green
8	Signal LED boost, yellow
9	Universal DIN rail adapter

6.3 Convection

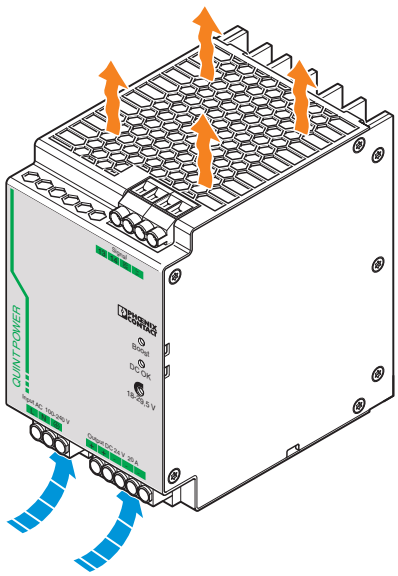

Figure 2 Convection

NOTE: enable convection

The housing can become very hot, depending on the ambient temperature and module load.

To enable sufficient convection, we recommend a minimum vertical clearance of 50 mm from other modules. In order to ensure proper functioning of the module, it is necessary to maintain a lateral distance of 5 mm and 15 mm for active components.

The device can be snapped onto all DIN rails in accordance with EN 60715 and should be mounted in the normal mounting position (connection terminal blocks on top and bottom).

6.4 Mounting position

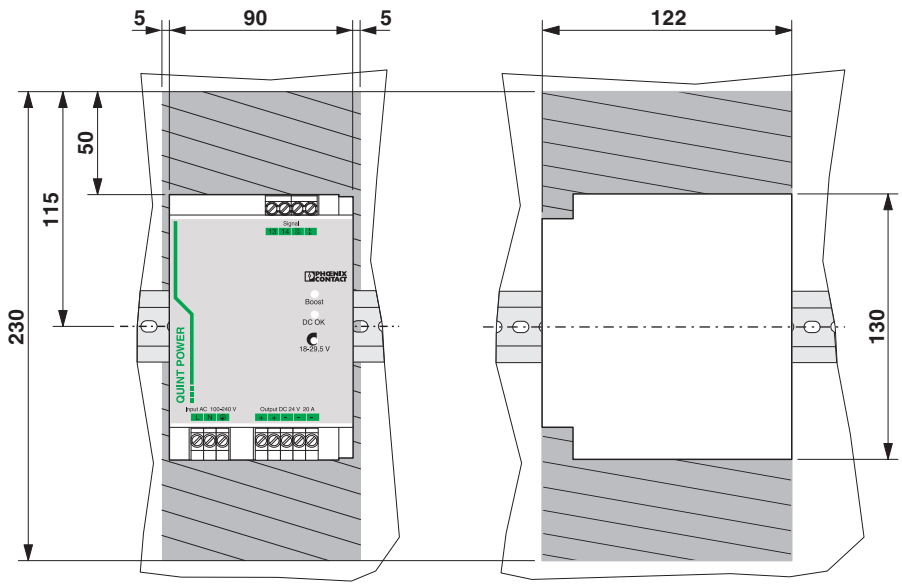

Figure 3 Locked areas

Possible mounting positions:

Normal mounting position, installation depth 125 mm (+ DIN rail) (delivery state)

Mounting position rotated by 90°, installation depth of 93 mm (+ DIN rail)

7 Mounting/removal

7.1 Normal mounting position

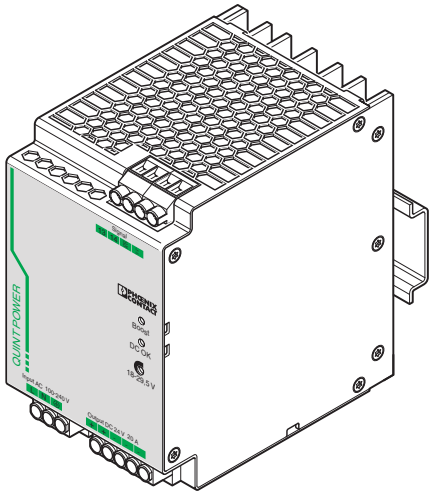

Figure 4 Normal mounting position

7.2 Mounting position rotated 90°

For a mounting position rotated at 90° to the DIN rail, mount the DIN rail adapter (UTA 107) as shown in the figure. No additional assembly material is required. Mounting screws: Torx® T10 (0.8 Nm ... 0.9 Nm tightening torque).

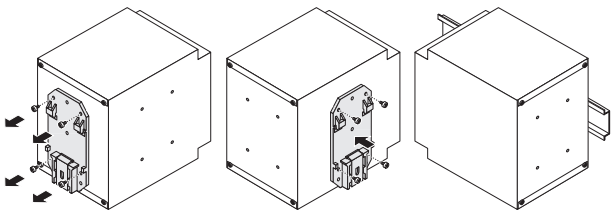

Figure 5 Mounting position rotated 90°

7.3 Mounting on a DIN rail

Position the module with the DIN rail guide on the upper edge of the DIN rail, and snap it in with a downward motion.

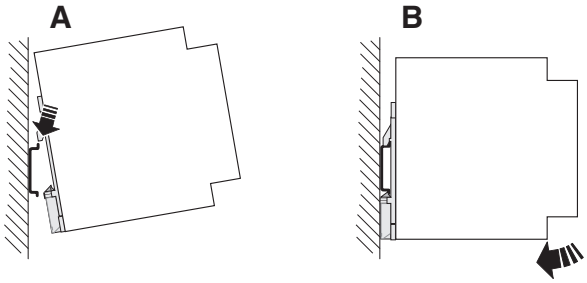

Figure 6 Assembly

7.4 Removal from the DIN rail

Pull the snap lever open with the aid of a screwdriver and slide the module out at the lower edge of the DIN rail.

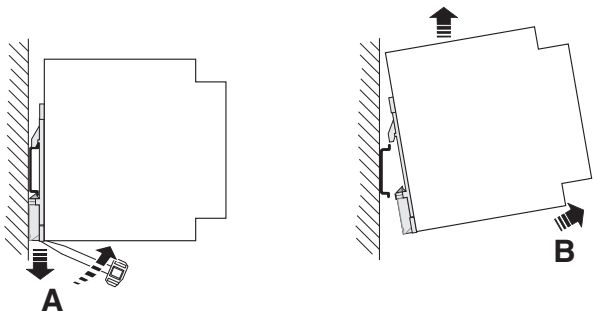

Figure 7 Removal

8 Device connection

8.1 Network types

The device can be connected to 1-phase AC networks or to two of the phase conductors of 3-phase systems (TN, TT or IT system according to VDE 0100-300/IEC 60364-3) with nominal voltages of 100 V AC ... 240 V AC.

For operation on two of the phase conductors of a three-phase system, an isolating facility for all poles must be provided.

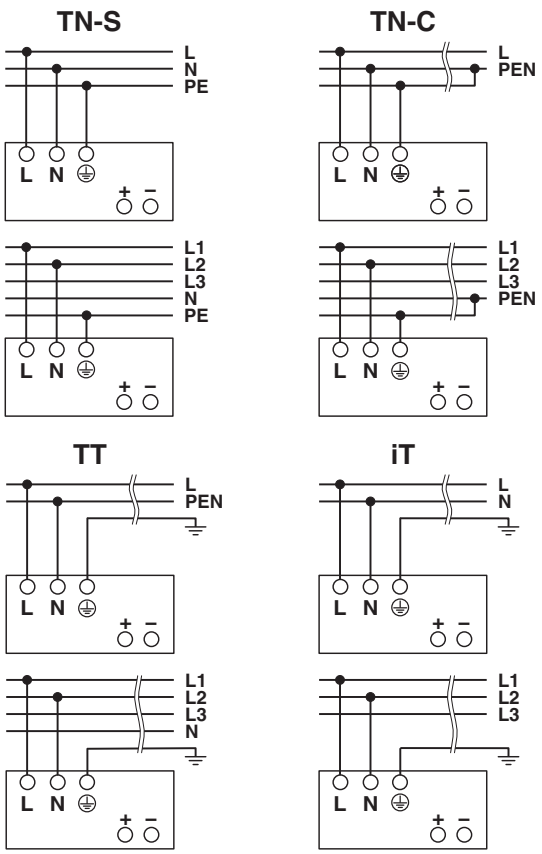

8.2 AC input

The supply voltage is connected via "Input AC 100 - 240 V" connection terminal blocks.

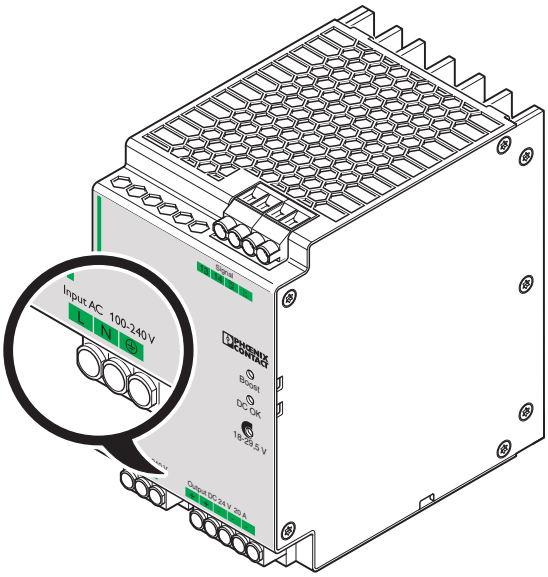

8.2.1 Protection of the primary side

The device must be installed in acc. with the regulations as in EN 60950. It must be possible to disconnect the device using a suitable isolating facility outside the power supply. Primary circuit mains protection, for example, is suitable for this purpose.

An internal fuse is provided for device protection. Additional device protection is not required.

8.2.2 Permissible backup fuse for mains protection

Power circuit-breaker 10 A or 16 A, characteristic B (or identical function).

Connect a suitable fuse upstream for DC applications!

CAUTION:

If an internal fuse is triggered, there is a device malfunction. In this case, the device must be inspected in the factory.

8.3 DC output

The output voltage is connected via the “Output DC” connection terminal blocks.

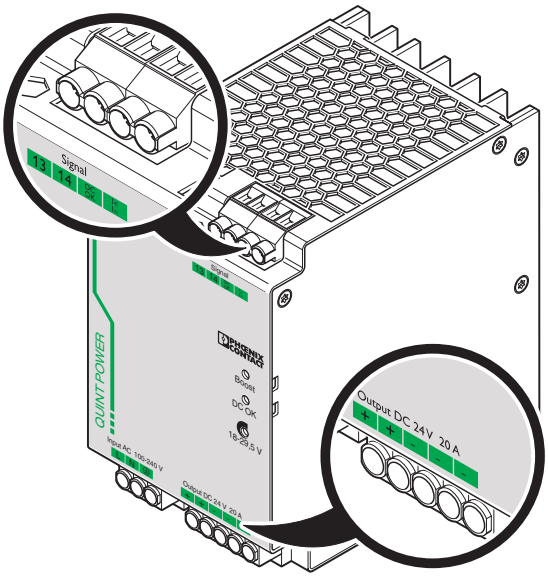

8.3.1 Protection of the secondary side

The device is electronically protected against short-circuit and idling. In the event of a malfunction, the output voltage is limited to 35 V DC.

8.3.2 Output characteristic curve

The module operates according to the U/I characteristic curve with POWER BOOST static power reserve. I_{BOOST} is available with consistent output voltage U_N. High switch-on currents are therefore absorbed without voltage dips.

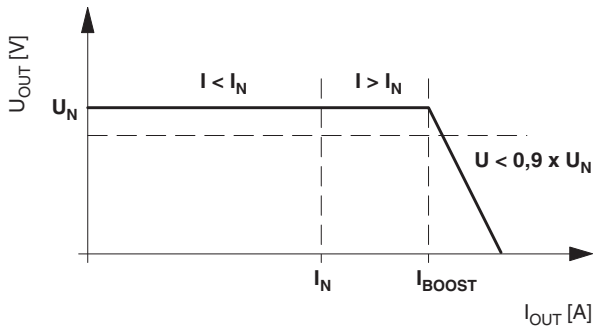

U_N = 24 V

I_N = 20 A

I_{BOOST} = 26 A

SFB Technology = 120 A (12 ms)

P_N = 480 W

P_{BOOST} = 624 W

9 SFB technology

SFB (Selective Fuse Breaking) technology reliably switches off faulty current paths in the event of a short circuit. In this case, it supplies up to six times the nominal current for 12 ms. SFB technology therefore reliably triggers standard circuit breakers. Faults are located reliably and important system parts remain in operation.

9.1 Circuit breaker tripping characteristics

Typically, a circuit breaker trips within 3 ... 5 ms. Fast enough to avoid voltage drops of parallel connected loads.

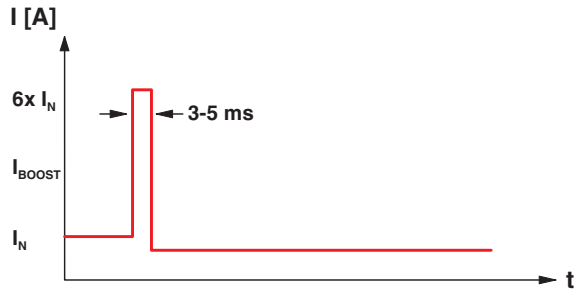

Tripping time of the circuit breaker = 3 - 5 ms, typically

9.2 Installation notes

To use the SFB technology of the QUINT power supply, you must observe the following requirements:

– When designing the secondary side, consider the configuration matrix that describes the maximum cable lengths depending on the performance class of the devices, cable cross section, and the circuit breaker.

> The current configuration matrix can be found in the product download area.

– Ensure the lowest possible cable impedance at the input of the power supply by using short cable lengths and large cable cross sections.

> Note the maximum distance between the power supply and load.
> (see also SFB configuration)

9.3 SFB configuration

9.3.1 Standard circuit breakers

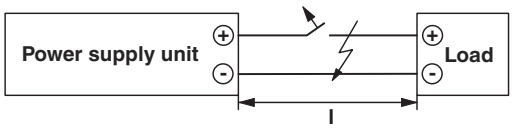

Figure 8 Cable lengths

Maximum distance between the power supply and load (l)

Cross section [^{2}mm]	0.75	1.0	1.5	2.5	4.0	6.0
Distance l with C2 circuit breaker [m]	14	19	29	49	79	< 100
Distance l with C4 circuit breaker [m]	8	11	17	29	47	70
Distance l with C6 circuit breaker [m]	4	5	8	14	22	33
Distance l with B6 circuit breaker [m]	12	17	25	42	68	< 100
Distance l with B10 circuit breaker [m]		9	13	23	37	55
Distance l with B16 circuit breaker [m]			5	9	15	22

The following parameters are the basis for calculation:

- Circuit breaker from Siemens, B and C characteristics (e. g., B6: 5SY6106-6)
- B characteristic: electromagnetic tripping of the circuit breaker at the latest at (5-fold rated current) x (correction factor 1.2 at 0 Hz) = 6-fold rated current
- C characteristic: electromagnetic tripping of the circuit breaker at the latest at (10-fold rated current) x (correction factor 1.2 at 0 Hz) = 12-fold rated current
- Ambient temperature: +20 °C
- The internal resistances of the circuit breakers are considered.
- In addition to short circuit current, the relevant power supply unit supplies half of the nominal current for paths connected in parallel.

9.3.2 CB TM1 SFB device circuit breaker

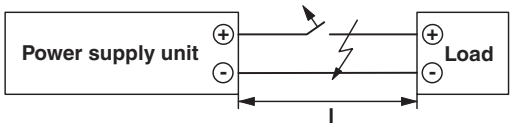

Figure 9 Cable lengths

Maximum distance between the power supply and load (l)

Cross section [^{2}mm]	0.75	1.0	1.5	2.5	4.0
Spacing with CB TM1 1A SFB P [m]	27	36	54	91	146
Spacing with CB TM1 2A SFB P [m]	18	25	37	63	101
Spacing with CB TM1 3A SFB P [m]	13	18	27	46	74
Spacing with CB TM1 4A SFB P [m]	10	14	21	35	57
Spacing with CB TM1 5A SFB P [m]	8	11	17	29	47
Spacing with CB TM1 6A SFB P [m]	6	8	12	20	32
Spacing with CB TM1 8A SFB P [m]	3	5	7	12	20
Spacing with CB TM1 10A SFB P [m]		3	4	8	13

The following parameters are the basis for calculation:

- CB TM1 xA SFB P device circuit breaker
- Electromagnetic triggering of the circuit breaker at the latest at (10 times the rated current)
- Ambient temperature: +20 °C
- The internal resistance of the device circuit breakers is taken into account
- In addition to short circuit current, the relevant power supply unit supplies half of the nominal current for paths connected in parallel.

10 Signaling

The following are available for function monitoring:

- The active signal output DC OK
- The floating DC OK output
- The active POWER BOOST signal output

In addition, the “DC OK” and “BOOST” LEDs can be used to evaluate the function of the power supply directly at the installation location (see output characteristic curve).

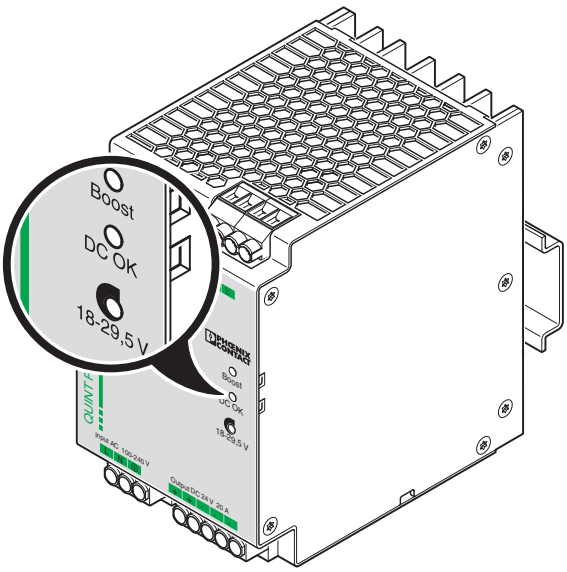

Figure 10 Signal outputs

If the output voltage falls below 90% of the output voltage set on the potentiometer as a result of overloading, the signal state “DC OK” switches from “Active High” to “Low”. The limit value of 90% always refers to the set output voltage range of 18 V DC to 29.5 V DC.

	Normal operation $I < I_N$	POWER BOOST $I > I_N$	Overload mode $U_{OUT} < 0.9 \times U_N$
“DC OK” LED, green	lit	lit	Flashing
“BOOST” LED, yellow	OFF	lit	lit
“DC OK” signal	ON	ON	OFF
“DC OK” relay	closed	closed	opened
Signal “$I < I_N$”	ON	OFF	OFF
Meaning	Normal operation of the power supply unit (U_{OUT} > 21.5 V)	POWER BOOST mode, e.g., for starting loads	Overload mode, e. g., load short circuit or overload

10.1 Floating switch contact

The floating switch contact opens to indicate that the set output voltage has been undershot by more than 10 % ($U_{OUT} < 0.9 \times U_N$). Signals and ohmic loads can be switched. For heavily inductive loads such as a relay, a suitable protective circuit (e.g., freewheeling diode) is necessary.

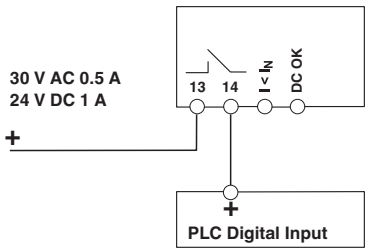

10.2 Active signal outputs

For the transmission of signals to a higher-level controller, the active “DC OK” and “Boost” signal outputs can be used.

The 18 ... 24 V DC signal is applied between the “DC OK” and “-” (active DC OK signal output) or between “$I < I_N$” and “-” (active POWER BOOST signal output) and can withstand a maximum of 20 mA.

By switching from “active high” to “low”, the DC OK signal output indicates that the set output voltage has been undershot by more than 10 % ($U_{OUT} < 0.9 \times U_N$). The DC OK signal is decoupled from the power output. This makes it impossible for devices connected in parallel to act as an external power supply.

The BOOST signal output “$I < I_N$” indicates that the nominal current has been exceeded. The power supply then switches to POWER BOOST mode. Thanks to this preventive function monitoring, critical operating states can be recognized at an early stage, prior to a voltage dip occurring.

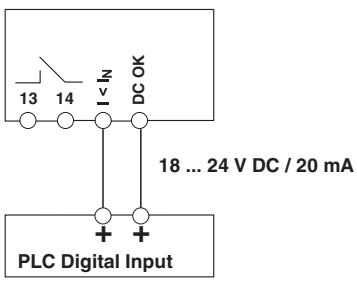

10.3 Signal loop

Monitoring of two devices: use the active DC OK signal output of device 1 and loop the floating alarm output of device 2. In the event of a malfunction, you will receive a group error message. Any number of devices can be looped. This signal combination saves wiring costs and logic inputs.

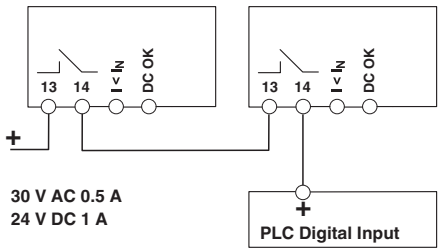

11 Derating

11.1 Temperature-dependent derating

At an ambient temperature of -25 °C to +40 °C, the device continuously supplies the I_{BOOST} output current. The device can supply the I_N nominal output current up to an ambient temperature of +60°C. At ambient temperatures above +60 °C, the output power must be decreased by 2.5 % per Kelvin increase in temperature. At ambient temperatures above +70 °C or in the event of a thermal overload, the device does not switch off. The output power is decreased to such an extent that device protection is provided. Once the device has cooled down, the output power is increased again.

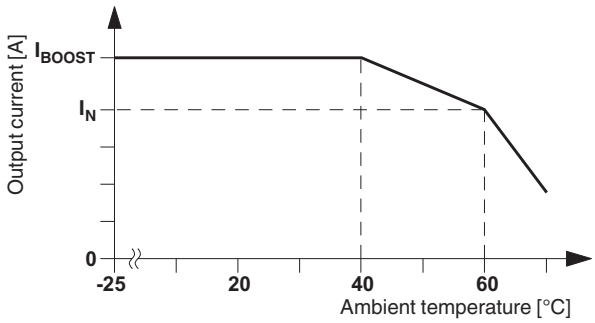

12 Operating modes

12.1 Series operation

Two power supplies can be connected in series to double the voltage. Only devices of the same performance class should be connected in series. Series connection should always be used when the output voltage of the module is not sufficient. For example, power supplies with 24 V DC nominal output voltage each supply 48 V DC in series. Depending on the specification of the PE connection, output voltages of +48 V or -48 V as well as ±24 V DC can also be made available.

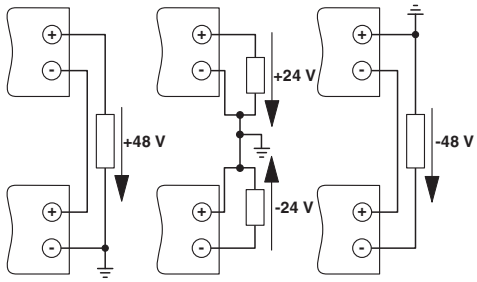

Figure 11 Series operation

12.2 Parallel operation

Devices of the same type can be connected in parallel to increase both redundancy and power. No further adjustments are necessary for the default setting.

If the output voltage of a power supply unit is adjusted, all power supplies connected in parallel must be set to the same output voltage in order to ensure an even distribution of current.

In order to ensure symmetrical current distribution, we recommend that all cable connections from the power supply unit to the busbar are the same length and have the same cross section.

Depending on the system, a protective circuit should be installed at each individual device output (e.g., decoupling diode, DC fuse or circuit breaker) for parallel connection of more than two power supplies. This prevents high return currents in the event of a secondary device fault.

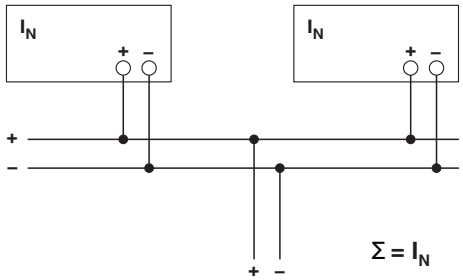

12.3 Redundant operation

Redundant circuits are suitable for supplying systems, which place particularly high demands on operational safety. If a fault occurs in the primary circuit of the first power supply unit, the second device automatically takes over the complete power supply without interruption, and vice versa. For this purpose, the power supply units to be connected in parallel must be large enough to ensure that the total current requirements of all loads can be fully met by one power supply unit. External decoupling diodes are required for 100% redundancy!

Optimization of redundancy can be achieved by decoupling and monitoring. Phoenix Contact offers a comprehensive product range for this purpose (e. g., QUINT-DIODE or QUINT-ORING).

Example: diode module

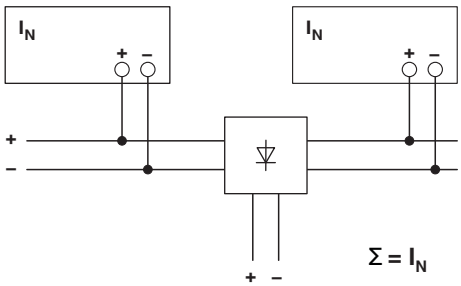

Example: QUINT ORING

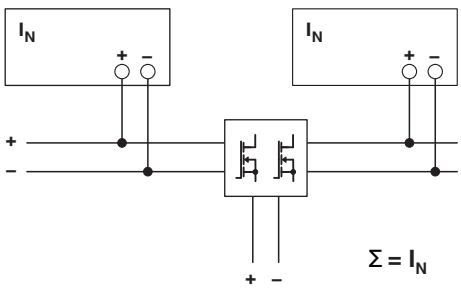

12.4 Increasing power

The output current can be increased to n x I_N in the case of n parallel connected devices. Parallel connection for increasing power is used when extending existing systems. A parallel connection is recommended if the power supply unit does not cover the current consumption of the most powerful load. Otherwise, the load should be distributed between individual devices that are independent from one another.

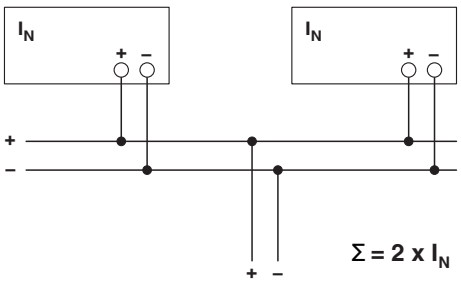

FIȘĂ TEHNICĂ E-UPS2
Sursă neîntreruptibilă UPS pentru automatizări

Nr Crt.	Specificațiile tehnice impuse prin Caietul de sarcini	Corespondența propunerii tehnice cu specificațiile tehnice impuse prin Caietul de sarcini	Producător
0	1	2	3
1.	**Parametrii tehnici şi funcţionali:** - Capacitate putere: 3000VA; - Voltaj nominal output: 230 VCA; - Frecvența output: 50 - 60 Hz; - Distorsiuni: <5% U - Conectori output: 8 x IEC 320 C13;2 x IEC Jumpers - Voltaj nominal input: 151 - 276Vca; - Frecvența input: 50 - 60 Hz; - Conectori input: IEC 320 C20; - Timp mediu de încarcare: minim 3 ore; - Temperatura: 0°C...+40°C; - Umiditate: 0 - 95%; - Zgomot: minim 45 dB; - Temperatura depozitare: -15°C...+ 45°C; - Umiditate depozitare: 0 - 95%;	**Parametrii tehnici şi funcţionali:** - Capacitate putere: 3000VA; - Voltaj nominal output: 230 VCA; - Frecvența output: 50 - 60 Hz; - Distorsiuni: <5% U - Conectori output: 8 x IEC 320 C13;2 x IEC Jumpers - Voltaj nominal input: 151 - 276Vca; - Frecvența input: 50 - 60 Hz; - Conectori input: IEC 320 C20; - Timp mediu de încarcare: minim 3 ore; - Temperatura: 0°C...+40°C; - Umiditate: 0 - 95%; - Zgomot: minim 45 dB; - Temperatura depozitare: -15°C...+ 45°C; - Umiditate depozitare: 0 - 95%;	**SCHRACK** **Cod UPS: USSEP300** **Cod Placa RS485: USMULTI302**
2.	**Specificaţii de performanţă şi condiţii privind siguranta în exploatare**: - Intrări: ▪ conexiuni de intrare: IEC-320 C20, Schuko CEE 7 / EU1-16P, British BS 1363A ▪ tensiune nominala de intrare: 230V ▪ frecventa de intrare: 50/60 Hz+/- 3 Hz (detectare automata) ▪ interval tensiune de intrare pentru operații principale: 140 - 280V - Ieșiri: ▪ distorsiune tensiune de ieșire: Sub 5% frecventa de ieșire (sincronizata cu alimentarea de la rețea): ▪ 50/60Hz +/- 3 Hz ▪ conexiuni de ieșire: (8) IEC 320 C13, (2) IEC 320 C19, (2) IEC Jumpers ▪ tensiune nominala la ieșire: 230V ▪ factor de vârf: 3 : 1 ▪ topologie dubla conversie ▪ tip forma de unda: Unda sinusoidala ▪ placa de comunicație RS485;	**Specificaţii de performanţă şi condiţii privind siguranta în exploatare**: - Intrări: ▪ conexiuni de intrare: IEC-320 C20, Schuko CEE 7 / EU1-16P, British BS 1363A ▪ tensiune nominala de intrare: 230V ▪ frecventa de intrare: 50/60 Hz+/- 3 Hz (detectare automata) ▪ interval tensiune de intrare pentru operații principale: 140 - 280V - Ieșiri: ▪ distorsiune tensiune de ieșire: Sub 5% frecventa de ieșire (sincronizata cu alimentarea de la rețea): ▪ 50/60Hz +/- 3 Hz ▪ conexiuni de ieșire: (8) IEC 320 C13, (2) IEC 320 C19, (2) IEC Jumpers ▪ tensiune nominala la ieșire: 230V ▪ factor de vârf: 3 : 1 ▪ topologie dubla conversie ▪ tip forma de unda: Unda sinusoidala ▪ placa de comunicație RS485;	

	▪ preluare contact EPO (emergency power off) in automatizarea locala; - Protecție: ▪ capacitate nominala supratensiune: 645 Joules ▪ filtrare multipolara zgomot, cu funcționare continua: 0,3%. Limitare supratensiune IEEE: timp de răspuns prindere zero: conform standardului UL 1449; - Baterie: Baterie cu placi de plumb si acid, etanșată, care nu necesita întreținere, cu electrolit suspendat: etanș - Management: Da; - Panou de control: LCD cu consola; - Alarma sonora: Da; - Atenționări sonore: Mod baterie Baterie slaba Suprasarcina; - Filtrare: Da;	▪ preluare contact EPO (emergency power off) in automatizarea locala; - Protecție: ▪ capacitate nominala supratensiune: 645 Joules ▪ filtrare multipolara zgomot, cu funcționare continua: 0,3%. Limitare supratensiune IEEE: timp de răspuns prindere zero: conform standardului UL 1449; - Baterie: Baterie cu placi de plumb si acid, etanșată, care nu necesita întreținere, cu electrolit suspendat: etanș - Management: Da; - Panou de control: LCD cu consola; - Alarma sonora: Da; - Atenționări sonore: Mod baterie Baterie slaba Suprasarcina; - Filtrare: Da;	
3.	**Condiţii privind conformitatea cu standarde relevante:** - Construcție conform: IEC 60038 IEC Standard Voltages;	**Condiţii privind conformitatea cu standarde relevante:** Construcție conform: IEC 60038 IEC Standard Voltages;	
4.	**Condiţii de garanţie şi postgaranţie:** - Producătorul va garanta calitatea şi buna funcţionare a produsului timp de 24 luni de la punerea în funcţiune sau de 36 luni de la data livrarii. - Produsul va corespunde normelor tehnice şi standardelor europene.	**Condiţii de garanţie şi postgaranţie:** - Producătorul garantează calitatea şi buna funcţionare a produsului timp de 24 luni de la punerea în funcţiune sau de 36 luni de la data livrarii. - Produsul va corespunde normelor tehnice şi standardelor europene.	
5.	**Condiţii cu caracter tehnic:** - Nu vor fi luate în consideraţie decât ofertele însoţite de documentaţie completă pentru selecţie şi montaj în limba română. - Vor fi anexate: ▪ instrucţiuni de montaj (scheme de conectare, broşuri, cataloage); ▪ instrucţiuni de exploatare; ▪ buletine de încercări, verificări, probe; ▪ declaratie de conformitate.	**Condiţii cu caracter tehnic:** - Nu vor fi luate în consideraţie decât ofertele însoţite de documentaţie completă pentru selecţie şi montaj în limba română. - Vor fi anexate: ▪ instrucţiuni de montaj (scheme de conectare, broşuri, cataloage); ▪ instrucţiuni de exploatare; ▪ buletine de încercări, verificări, probe; ▪ declaratie de conformitate.	

Page
40

GENIO Tower Plus

USSEP Series

USSEP100

USSEP300

1:1 700-3000VA

Mobil Code

Schrack-Info

- **Power factor0.9**
- **Operating flexibility**
- **Emergency function**
- **Battery optimisation**
- **Runtime expandability**
- **Low noise level**

The GENIO Tower Plus offers a unique, modern design and improved performance. GENIO Tower Plus uses ON LINE double conversion technology, resulting in the highest levels of reliability and maximum protection for critical loads such as servers, and IT and voice/data applications. For business continuity applications requiring long battery runtimes, battery autonomy can be extended up to several hours using ER models fitted with more powerful battery chargers.

The front display panel has been entirely redesigned, adding an LCD display that shows the input and output voltages, battery readings and UPS operating status information. The inverter and the microprocessor control stage has been completely redesigned to provide increased efficiency and greater configuration options.

Maximum expandability: The GENIO Tower Plus is supplied as standard with a USB port and an expansion slot for protocol conversion or relay contacts boards.With energy savings in mind, the device is also fitted with a shut-off button to reduce energy consumption to zero during periods of inactivity. GENIO Tower Plus is available for the following power outputs: 700VA, 1000VA, 1500VA, 2200VA, and 3000VA.

Operating Flexibility

Different operating modes are available to reduce energy consumption based on specific load and user requirements:

- **ONLINE**: maximum load protection and output voltage waveform quality
- **ECO**: The UPS works in offline mode with the load powered by the mains, reducing consumption and thus improving efficiency (up to 98%)
- **SMART ACTIVE MODE**: The UPS automatically selects Online or Line Interactive operation, depending on the quality of the mains supply, checking the number, frequency and type of disturbances present
- **STANDBY OFF**: The UPS supplies the load only when the mains fails. The inverter begins working with a progressive start-up sequence to prevent high inrush currents
- **FREQUENCY CONVERTER OPERATION** (50/60Hz or 60/50Hz).

Emergency Function

This configuration ensures the operation of emergency systems that must be supplied in the event of a mains power failure, such as emergency lighting, fire detection/extinguishing systems and alarms. When the mains power supply fails, the inverter begins

GENIO Tower Plus

powering the loads with a progressive startup (Soft Start) in order to prevent overload.
GENIO Tower Plus is compliant for installation in medium-voltage transformer rooms in accordance with applicable legislation, for the power supply with reserve charge of medium-voltage coils.

Battery Optimization

The GENIO Tower Plus series has a deep discharge protection device to optimise battery life. Periodically, the UPS carries out a battery efficiency test (which can also be manually activated). Its wide input voltage tolerance range helps to reduce battery usage and maintain performance over time.

Autonomy Time Extension

Optional battery extension packs can be connected to increase UPS runtime.
In addition, the GENIO Tower Plus range includes ER versions with no internal batteries and more powerful battery chargers for longer runtimes.

Low Noise Level

Thanks to the use of high frequency components and load-based fan speed control, the noise produced by the UPS is less than 40dBA.

Features

- Filtered, stabilised and reliable voltage: double conversion online technology (VFI compliant with IEC 62040-3) with filters for the suppression of atmospheric disturbances.
- High overload capability (up to 150%)
- Programmable Auto-restart when mains is restored
- Battery start-up (Cold Start)
- Power factor correction (UPS input power factor close to 1)
- Wide input voltage tolerance range (from 140V to 276V) without battery intervention
- Runtime extendable up to several hours
- Fully configurable using UPS Tools configuration software
- Highly reliable batteries (automatic and manually-activated battery test)
- High level of UPS reliability (total microprocessor control)
- Low impact on the mains (sinusoidal absorption)

Advanced Communications

- Multi-platform communications for all operating systems and network environments: UPSMon monitoring and shutdown software is available for free download at www.ups-technet.com for the operating systems Windows 10, 8, 7, 2008, Vista, 2003, XP, Linux, Mac OS X, Sun Solaris, VMWare ESX and other Unix operating systems
- UPS Tools configuration and personalisation software
- RS232 serial port and opto-isolated contacts
- USB port
- Slot for communications board.

Page 41

Details

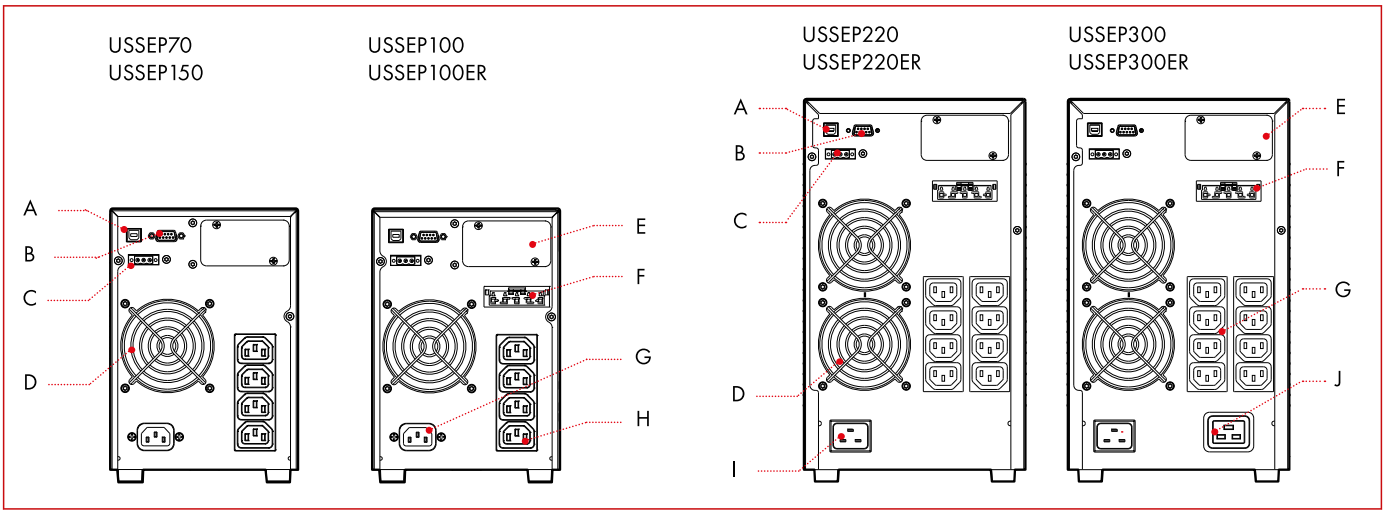

Key

A	USB port
B	RS232 communication port and contacts
C	REPO port (Remote emergency power off)
D	Cooling fans
E	Slot for communication cards

F	Battery expansion connector
G	IEC 10A input plug
H	IEC 10A output socket
I	IEC 16A input plug
J	IEC 16A output socket

GENIO Tower Plus

Battery Boxes

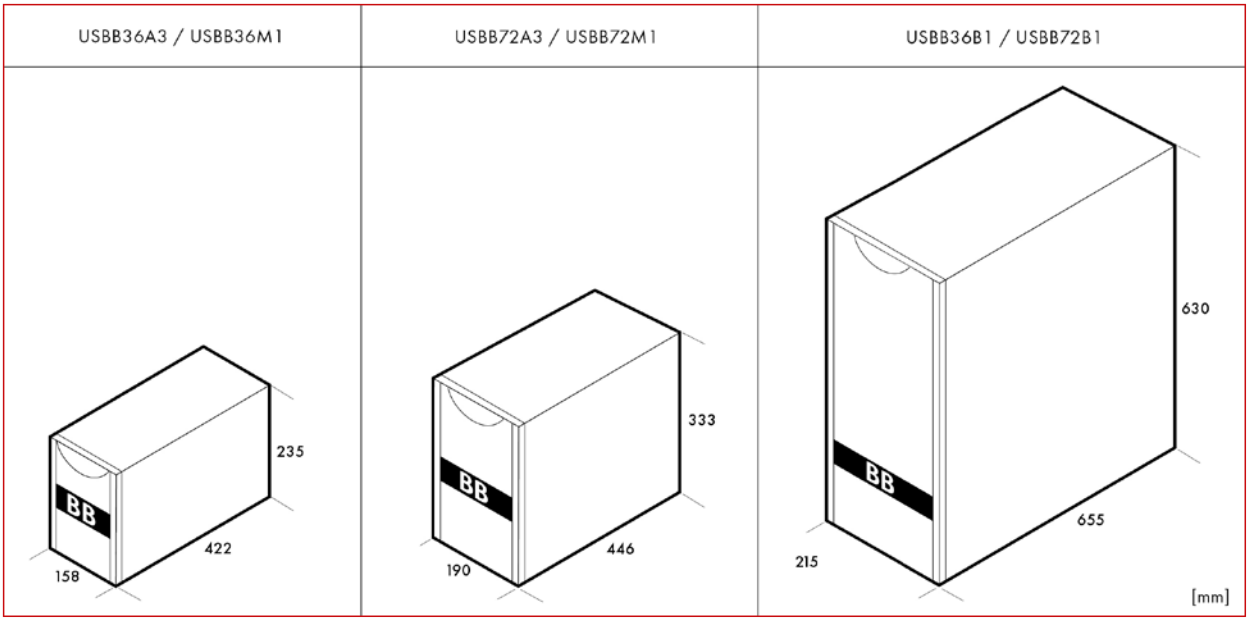

Autonomy Times

Order no.	Max. Apparent Power	Max. Effective Power	Autonomous Time		Overall Weight
			Typical Load*	Full Load**	
USSEP70	700VA	630W	11min.	7min.	10.9kg
USSEP100	1000VA	900W	14min.	8min.	13.3kg
USSEP100 +USBB36A3	1000VA	900W	36min.	22min.	25.5kg
USSEP100 +USBB36M1	1000VA	900W	59min.	40min.	32.6kg
USSEP100ER +USBB36B1	1000VA	900W	115min.	78min.	70.0kg
USSEP150	1500VA	1350W	9min.	5min.	14.8kg
USSEP220	2200VA	1980W	13min.	6min.	25.6kg
USSEP220 +USBB72A3	2200VA	1980W	30min.	19min.	49.1kg
USSEP220 +USBB72M1	2200VA	1980W	55min.	35min.	63.4kg
USSEP220ER +USBB72B1	2200VA	1980W	100min.	71min.	48.4kg
USSEP220	with load 1500VA 1050W:		19min.	13min.	25.6kg
USSEP220 +USBB72A3	with load 1500VA 1050W:		51min.	35min.	49.1kg
USSEP220ER +USBB72B1	with load 1500VA 1050W:		175min.	113min.	48.4kg
USSEP300	3000VA	2700W	9min.	5min.	28.0kg
USSEP300 +USBB72A3	3000VA	2700W	25min.	15min.	49.1kg
USSEP300 +USBB72M1	3000VA	2700W	45min.	27min.	65.8kg
USSEP300ER +USBB72B1	3000VA	2700W	74min.	50min.	115.0kg
USSEP300ER +2xUSBB72B1	3000VA	2700W	173min.	109min.	216.0kg

* Typical Load: Autonomous Time calculated with 75% load [VA] with power factor 0.66

** Full Load: Autonomous Time calculated with 100% load [VA] with power factor 0.7

GENIO Tower Plus

Technical Data

Models	**USSEP700**	**USSEP1000**	**USSEP1000ER**	**USSEP1500**	**USSEP2200**	**USSEP2200ER**	**USSEP3000**	**USSEP3000ER**
Power	700VA/630W	1000VA/900W		1500VA/ 1350W	2200VA/1980W		3000VA/2700W	
Input								
Nominal voltage	220-230-240VAC							
Voltage range without battery intervention	Vin 140-276VAC @ 50% LOAD / Vin 184-276VAC @ 100% LOAD							
Maximum permitted voltage	300VAC							
Nominal frequency	50/60Hz							
Frequency range	50Hz ±5% / 60Hz ±5%							
Power factor	≥0,99							
Current distortion	≤ 7%							
Bypass								
Voltage tolerance	180 - 264VAC							
Overlaod	125% for 5s , 150% for 1s							
Frequency tolerance	Frequency selected (from ±1.5Hz to ±5Hz configurable)							
Output								
Voltage distortion with linearload / with non-linear load	≤2% / ≤4%							
Frequency	Selectable: 50Hz or 60Hz or self-learning							
Static variation	±1%							
Dynamic variation	≤ 5% in 20ms							
Waveform	Sinusoidal							
Current crest factor	3:1							
EfficiencyECO and Smart Active Modes	98%							
Batteries								
Type	VRLA AGM maintenance-free lead based; Supercaps							
Recharge time	2-4h		n.V.	2-4h		n.V.	2-4h	n.V.
Other features								
Net weight	10.9kg	13.3kg	7kg	14.8kg	25.6kg	14kg	28kg	15kg
Gross weight	12.5kg	14.9kg	8,6kg	15.5kg	28.8kg	17kg	31.2kg	18kg
Dimensions (BxTxH)	158x422x235mm				190x446x333mm			
Packaging dimensions (BxTxH)	245x500x340mm				325x585x470mm			
Protection against overvoltage	300 Joules							
Protections	Overcurrent - short-circuit - overvoltage - undervoltage - temperature - excessive low battery							
Communications	USB / DB9 with RS232 and contacts / Slot for communications interface							
Input plugs	1 iEC 320 C14				1 iEC 320 C20			
Output sockets	4 iEC 320 C13				8 iEC 320 C13		8 iEC 320 C13 + 1 iEC 320 C19	
Standards	European directives: L V 2014/35/EU low voltage Directive EMC 2014/30/EU electromagnetic compatibility Directive Standards: Safety IECEN 62040-1; EMC IEC EN 62040-2; RoHS compliant Classification in accordance with IEC 62040-3 (Voltage frequency Indioendent) VFI - SS- 111							
Ambient temperatur	0°C / +40°C							
Recommended temperature for battery life	20°C - 25°C							
Range for relative humidity	5-95% non condensing							
Colour	Black							
Noise level at 1m	≤40dBA							
Standard equipment provided	Power cable, IEC-IEC cable, USB cable, safety manual, quick start guide							

GENIO Tower Plus

DESCRIPTION	AVAILABLE	STORE	ORDER NO.
GENIO Tower Plus (stand alone devices)			
700VA / 630W / full load: 7min. / typical load: 11min. / 158x422x235mm (WxDxH) / 11kg			**USSEP70**
1000VA / 900W / full load: 8min. / typical load: 13min. / 158x422x235mm (WxDxH) / 13kg			**USSEP100**
1000VA / 900W / 0min. / 6A charger / 158x422x235mm (WxDxH) / 7kg			USSEP100ER
1500VA / 1350W / full load: 6min. / typical load: 11min. / 158x422x235mm (WxDxH) / 15kg			**USSEP150**
2200VA / 1980W / full load: 7min. / typical load: 11min. / 190x446x333mm (WxDxH) / 26kg			**USSEP220**
2200VA / 1980W / 0min. / 6A charger / 190x446x333mm (WxDxH) / 14kg			USSEP220ER
3000VA / 2700W / full load: 6min. / typical load: 11min. / 190x446x333mm (WxDxH) / 28kg			**USSEP300**
3000VA / 2700W / 0min. / 6A charger / 190x446x333mm (WxDxH) / 15kg			USSEP300ER
Battery boxes incl. batteries			
For USSEP100 36V 7Ah tower mounting / 158x422x235mm (WxDxH) / 12kg			USBB36A3
For USPRP100ER 36V 40Ah tower mounting / 215x655x630mm (WxDxH) / 63kg			USBB36B1
For USSEP100 36V 14Ah tower mounting / 158x422x235mm (WxDxH) / 20kg			USBB36M1
For USSEP220 and USSEP300 7Ah tower mounting / 190x446x333mm (WxDxH) / 24kg			USBB72A3
For USPRD220ER, USPRD300ER,USPRP220ER, USPRP300ER, USSEP220ER and USSEP300ER 40Ah tower mounting / 215x655x630mm (WxDxH) / 101kg			USBB72B1
For USSEP220 and USSEP300 14Ah tower mounting / 190x446x333mm (WxDxH) / 38kg			USBB72M1
Accessories			
US Netman 204 Plus, plug in board TCP/IP			**USNETMA204**
Isolation trafo box for USPRP220 and USPR300 / 160x460x340mm (WxDxH) / 26kg			USMMDP300
J-Bus/ModBUS UPS interface via RS232/RS485min. boxed version			USMULTI301
J-Bus/ModBUS UPS interface via RS232/RS485min. plug in card			USMULTI302
Plug in board for UPS alarm and status indication with potential free contacts			**USMULTI384**
Interface 8 inp. 8 outp. (programmable), Modbusmin. / boxed version			USMULTIIOB
Remote supervision panel for UPS with graphic display and RS232			USMULTIPAN
Maintenance bypass 16A (upto 3kVA UPS) - wall mounting / 220x480x50mm (WxDxH) / 2kg			**USBYM**
PDU for UPS, 4 Outlets Schuko, 10A, 1.1m cable with IEC C14 plug, black			**Q7533060-A**
Profibus UPS interface (DP-V1, Profidrive V2 PP05)			USMULTI411

Technical data

UNINTERRUPTIBLE POWER SUPPLY

Series GENIO Tower Plus

USSEP VFI 0,7 - 3kVA

1 phase input / 1 phase output

On Line / Double Conversion (VFI) Technology

CONTENTS

1. GENERAL DESCRIPTION

The GENIO TOWER PLUS family UPS is an online single phase unit, with power levels of up to 3 kVA, in a cabinet tower configuration of two different sizes based on the power required.

That UPS is designed to be configured for various operating modes:

- **ON-LINE** is the operating mode which offers maximum load protection and the best output waveform quality (*)
- **ECO** is the operating mode which offers the least UPS consumption, or rather maximum efficiency (**)
- **SMART ACTIVE** is the operating mode which allows the UPS to decide whether to enable ON-LINE or ECO functionality, based on a statistic regarding the quality of the Power Supply network.
- **STAND-BY OFF [Mode 1]** is the operating mode in which the UPS functions as an emergency device. While power is present the UPS does not intervene. In the event of a blackout, the necessary power is provided by the UPS.

(*) the effective values (rms) of the voltage and the output frequency are constantly controlled by the microprocessor independently with respect to the waveform of the network voltage, thereby maintaining the output frequency synchronized with the network within a configurable interval.
Outside of this interval, the UPS eliminates its synchronism with the network and brings itself to its nominal frequency; under these conditions, the UPS cannot utilize the bypass.
(**) In order to optimize yield, the load is normally powered by the bypass in ECO mode. In the event that the network should move outside of the pre-set tolerances, the UPS will switch to ON LINE functionality. Once the network has moved back within the pre-set tolerances for at least five minutes, the UPS will go back to powering the load through the bypass.

ADDITIONAL FUNCTIONS

- **MANUAL BYPASS**

The Manual Bypass function allows the UPS to be switched to the bypass line. In this configuration, the load is powered directly by the input network and any network disruptions will have a direct effect on the load.

This family of UPS units is completed with relative battery cabinets.
The USBB36 and USBB72 Battery Boxes have the same aesthetic design as the UPS units and are capable of housing one or two battery branches in parallel.
The USBB36-B1 and USBB72-B1 Battery Boxes are larger battery cabinets which are suitable for housing 40 Ah batteries.
Both Battery Box versions are available without batteries. These versions come complete with all of the required kits so that the user can decide upon the most suitable configuration to meet his/her needs.
All of the Battery Box versions are supplied without battery charger boards.

For increased recharging current, ER version UPS units are available, which contain high-powered battery charger boards instead of batteries.

1.1. Main features of the UPS unit

The main features of the GENIO TOWER PLUS series include:

- VFI (On-line) / pure sinusoidal waveform during battery-powered functionality
- Output frequency with automatic selection (auto-sensing)
- Front/rear ventilation
- LCD display
- UPS with configurable and customizable functions (i.e. by-pass thresholds, automatic testing, acoustic alarm, etc.) through proprietary configuration software
- Protected battery expansion connector
- Unlimited expandability of autonomy with dedicated or custom Battery Boxes
- Expansion slot for communication cards (i.e. second USB and RS232 Port, SNMP, ModBus, etc.)
- RS232 and USB communication ports
- Frequency converter mode with a derating of 30%
- “Free Running” mode with a derating of 30%
- Eco mode function with 98% yield

1.2. Standard Versions

- 700 VA – 630 W – PF 0.9 – 2 batteries, 12 V, 7 Ah – small cabinet
- 1000 VA – 900 W – PF 0.9 – 3 batteries, 12 V, 7 Ah – small cabinet – with battery expansion
- 1500 VA – 1350 W – PF 0.9 – 3 batteries, 12 V, 9 Ah – small cabinet
- 2200 VA – 1980 W – PF 0.9 – 6 batteries, 12 V, 7 Ah – large cabinet – with battery expansion
- 3000 VA – 2700 W – PF 0.9 – 6 batteries, 12 V, 9 Ah – large cabinet - with battery expansion

1.3. ER Versions for extended autonomy

- 1000 VA ER, 2200 VA ER, 3000 VA ER
- Same features as the standard version
- Recharging battery current 6 A

2. GENIO TOWER PLUS SERIES UPS AESTHETICS

2.1. GENIO TOWER PLUS FRONT PANEL

- Chassis reference colour: Pantone Black 6U
- Colour of the silver parts: RAL 9006

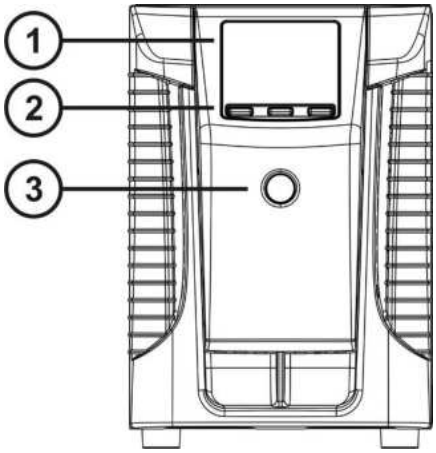

1. Display
2. Multifunction keys
3. ON/OFF button

2.2. GENIO TOWER PLUS REAR PANEL

700VA / 1500VA

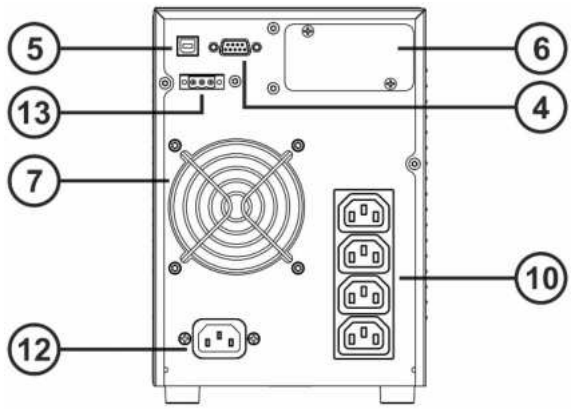

1000VA / 1000VA ER

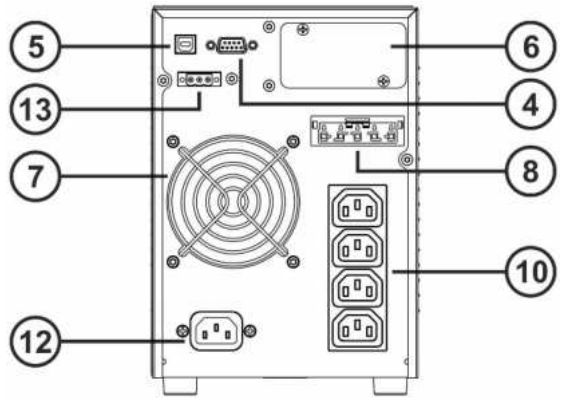

2200VA / 2200VA ER

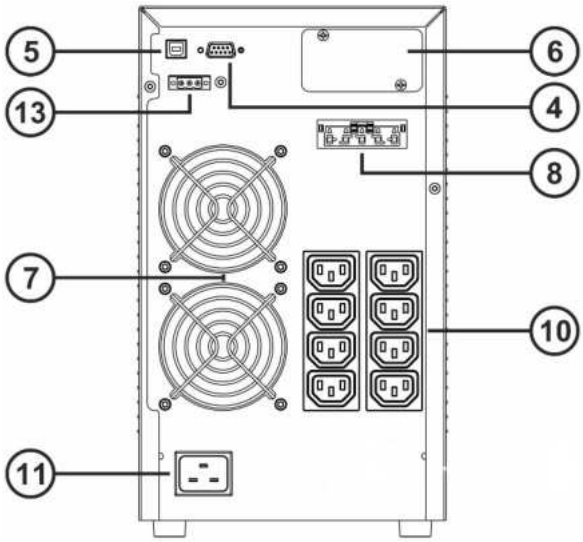

3000VA / 3000VA ER

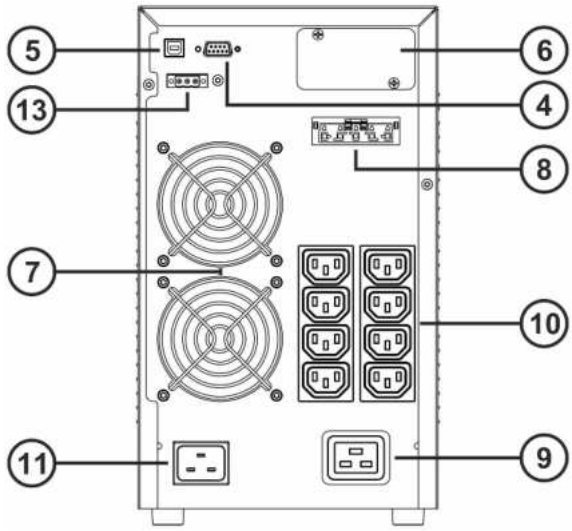

4. RS232 communication port and opto-isolated contacts
5. USB Port
6. Expansion slot
7. Cooling fans
8. Battery expansion connector
9. IEC 16 A output socket
10. IEC 10 A output socket
11. IEC 16 A input plug
12. IEC 10 A input plug
13. REPO connector

2.3. Battery Box front panel

2.4. Battery Box rear panel

36 V Battery Box

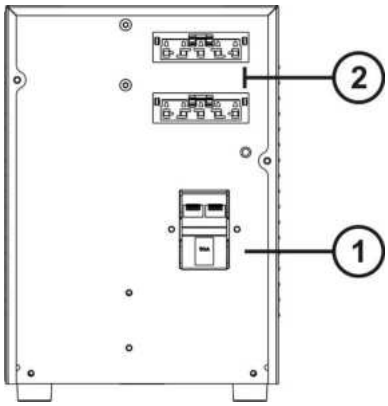

72 V Battery Box

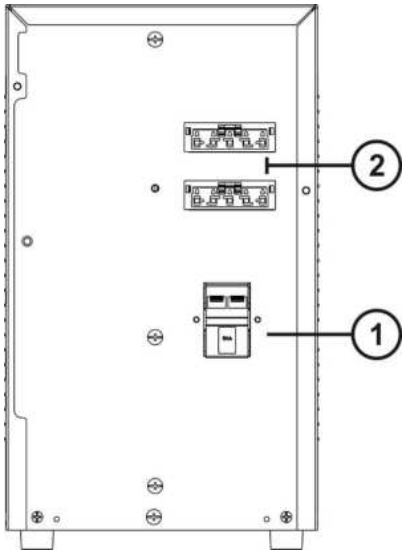

1. Battery disconnection switch (SWBATT)
2. Battery expansion connector

a. USBBox T12 REAR PANEL

36 V Battery Box

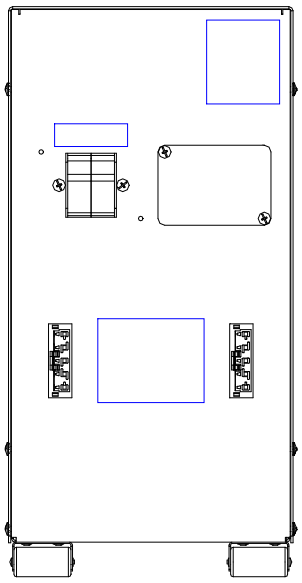

72 V Battery Box

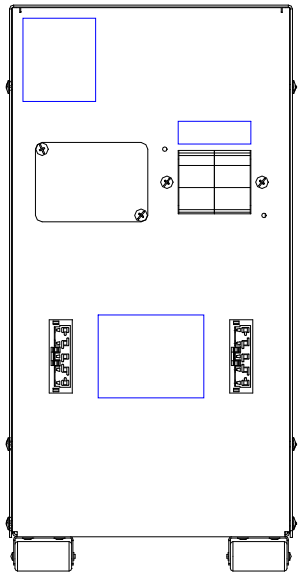

1. Battery disconnection switch (SWBATT)
2. Battery expansion connector

3. TECHNICAL DATA TABLE

3.1.GENIO TOWER PLUS UPS

GENIO TOWER PLUS UPS		700 VA	1000 VA 1000 VA ER	1500 VA	2200 VA 2200 VA ER	3000 VA 3000 VA ER
INPUT						
Rated voltage	**[Vac]**	220 - 230 – 240				
Maximum allowed input voltage	**[Vac]**	300				
Voltage range for no battery intervention (configurable through UPSTools)		Maximum: 276 Vac Minimum: 184 Vac AT 100% load Minimum: 184 Vac ÷ 140 Vac (from 100% to 50% load in linear mode) Return to network powered functionality: 190 Vac				
Rated frequency	**[Hz]**	50 – 60				
Power factor		≥ 0.98				
Current distortion @ maximum load		≤ 7%				
Maximum current@184 Vac (1)	**[A]**	4	5,8	8,2	12	16
Rated current@220 Vac (2)	**[A]**	3,3	4,7	6,9	10,1	13,6
Circuit breaker	**[A]**	7	7	10	12	16
Rated current (only for ER versions) @220 Vac(2)	**[A]**	N/A	5,7	N/A	12,2	14,1

(1) @ rated load, minimum voltage of 184 Vac, battery charging
(2) @ rated load, rated voltage of 220 Vac, battery charging

GENIO TOWER PLUS UPS		700 VA	1000 VA 1000 VA ER	1500 VA	2200 VA 2200 VA ER	3000 VA 3000 VA ER
BYPASS						
Accepted voltage range for switching	**[Vac]**	Minimum configurable threshold: 180 ÷ 200 Maximum configurable threshold: 250 ÷ 264				
Accepted frequency range for inverter synchronization		Selectable: 3% ÷ 10% Default: ±5%				
Switching time	**[ms]**	Typical: 4				
BATTERY						
Number of batteries / V	**[no.] /[V]**	2 / 12	3 / 12	3 / 12	6 / 12	6 / 12
Standard capacity	**[Ah]**	7 (a)	7 (a)	9 (b)	7 (a)	9 (b)
Charging current @ UPS ON with fan at maximum speed	**[A]**	1	1	1	1,1	1,1
Charging time (c)	**[h]**	<4 for 80% of the load				
Expandability and rated voltage of the Battery Box		Not expandable	36 Vdc	Not expandable	72 Vdc	72 Vdc
Charging current (only for ER versions)		N/A	6 A (d)	N/A	6 A (d)	6 A (d)

(a) 12 V / 7 Ah Batteries: ***CSB GP1272-F2*** or ***CSB GP1272(28W)*** or ***CSB UPS12360-7*** or ***YUASA NPW36-12***
(b) 12 V / 9 Ah Batteries: ***CSB HR1234W-F2*** or ***YUASA NPW45-12***
(c) For the ER versions, the charging time depends on the batteries installed in the Battery Box
(d) The charging current depends on the input voltage and the internal temperature of the UPS. Under normal conditions, temperature derating of about 2-3 A may occur
In order to select the minimum capacity of the Battery Box, verify the maximum charging current accepted by the batteries.

GENIO TOWER PLUS UPS		700 VA	1000 VA / 1000 VA ER	1500 VA	2200 VA / 2200 VA ER	3000 VA / 3000 VA ER
OUTPUT						
Rated voltage	**[Vac]**	Selectable: 220 / 230 / 240				
Static variation (3)		1.5%				
Dynamic variation (4)		≤5% in 20 ms				
Waveform		Sinusoidal				
Voltage distortion @ linear load		≤ 2%				
Voltage distortion @ distorting load		≤ 5%				
Frequency (5)	**[Hz]**	Selectable: 50 / 60 / automatic detection				
Current crest factor		≥ 3:1				
Rated power	**[VA]**	700	1000	1500 VA	2200	3000
Rated power	**[W]**	630	900	1350	1980	2700
Derating: Frequency converter / forced frequency de-synchronization		-30%				
Overload: 100% <load <110%		Bypass line available: activates the bypass after 2 sec. shut down after 120 sec. Bypass line unavailable: shutdown after 60 sec.				
Overload: 110% <load <150%		Bypass line available: activates the bypass after 2 sec. shutdown after 4 sec. Bypass line unavailable: shutdown after 4 sec.				
Load overload >150%		Bypass line available: activates the bypass instantaneously shutdown after 1 sec. Bypass line unavailable: shutdown after 0.5 sec.				
Inverter short circuit		Short circuit current ≤ Power [VA] / 220 V x 2 shutdown after 300 ms				

(3) Network/Battery @ 0% - 100% load
(4) @ Network / battery / network @ 0% / 100% / 0% resistive load
(5) If the network frequency is within ±5% of the selected value, the UPS is synchronized with the network. If the frequency is off tolerance or battery-powered functionality is enabled, the frequency is that which is selected +0.1%

GENIO TOWER PLUS UPS		700 VA	1000 VA 1000 VA ER	1500 VA	2200 VA 2200 VA ER	3000 VA 3000 VA ER
AUTONOMIES						
Measured autonomy @ 100% linear load – only internal batteries		4'10"	5'	4'10"	4'10"	4'10"
MISCELLANEOUS						
Leakage current to ground	**[mA]**	≤ 1.5			≤ 2	
AC/AC yield in ON-LINE mode		88,4%	89,2%	91,7%	92,4%	93,2%
Automatic consumption in ECO mode (batteries disconnected)		10,5 W	10,5 W	10,5 W	12 W	12 W
DC/AC yield in BATTERY mode		86,3%	88,0%	88,3%	90%	90,4%
Automatic consumption from the network (batteries disconnected)		42 W	29 W	38 W	44 W	58 W
Automatic consumption in Stand-by mode (batteries disconnected)		6 W	6 W	6 W	6 W	14 W
Automatic consumption with on/off switch turned off		0,1 W	0,1 W	0,1 W	0,4 W	0,4 W
Power loss with resistive nominal load	**[W]** **[BTU/h]** **[kcal/h]**	80 270 68	107 367 93	121 416 105	161 550 139	202 690 174
Operating room temperature (6)	**[°C]**	0 – 40				
Humidity		< 90% without condensation				
Installation height		Operation: 1000 m at nominal power (-1% power for every 100 m above 1000 m) 4000 m maximum Transport: <15000 m				
Protection devices		Excessive battery discharge – overcurrent – short circuit – over voltage – undervoltage – thermal				
Overvoltage protection		2 VDR x 300 Joule				
Noise levels		<40 dB(A) at 1 m				
Dimensions L x D x H	**[mm]**	158 x 422 x 235			190 x 446 x 333	
Packaging dimensions L x D x H	**[mm]**	245 x 500 x 340			325 x 585 x 470	
Net weight	**[kg]**	11	13	14	26	28
Gross weight	**[kg]**	12.5	14.5	15.5	29	31
Net weight (only for ER versions)	**[kg]**	N/A	7	N/A	14	15
Gross weight (only for ER versions)	**[kg]**	N/A	8.5	N/A	17	18

GENIO TOWER PLUS UPS	700 VA	1000 VA / 1000 VA ER	1500 VA	2200 VA / 2200 VA ER	3000 VA / 3000 VA ER
ADDITIONAL INFORMATION					
Safety compliance	EN 62040-1 and 2006/95/EC Directives				
EMC compliance	EN 62040-2 cat. C2 and 2004/108/EC Directives				
Certifications					

12

3.2.T10 Battery Box

T10 BATTERY BOX		AB36M1	USBB36A3	USBB36M1	AB72M1	USBB72A3	USBB72M1
Rated battery voltage	**[Vdc]**	36			72		
Number of batteries / V	**[no.]/[V]**	0 / 12	3 / 12	3+3 / 12	0 / 12	6 / 12	6+6 / 12
Standard capacity	**Ah**	0	7	14	0	7	14
Dimensions L x D x H	**[mm]**	158 x 422 x 235			190 x 446 x 333		
Packaging dimensions L x D x H	**[mm]**	245 x 500 x 340			325 x 585 x 470		
Net weight	**[kg]**	6	14	21	12	27	41
Gross weight	**[kg]**	7	15	22	14	29	43

3.3.T12 Battery Box

T12 BATTERY BOX		USBB36B1	USBB72B1	AB72B1
Rated battery voltage	**[Vdc]**	36	72	36 / 72
Number of batteries / V	**[no.]/[V]**	3 / 12	6 / 12	0 / 12
Standard capacity	**Ah**	40	40	0
Dimensions L x D x H	**[mm]**	158 x 422 x 235		
Packaging dimensions L x D x H	**[mm]**	590 x 320 x 760		
Net weight	**[kg]**	55	100	10
Gross weight	**[kg]**	65	110	20

4. BLOCK DIAGRAM

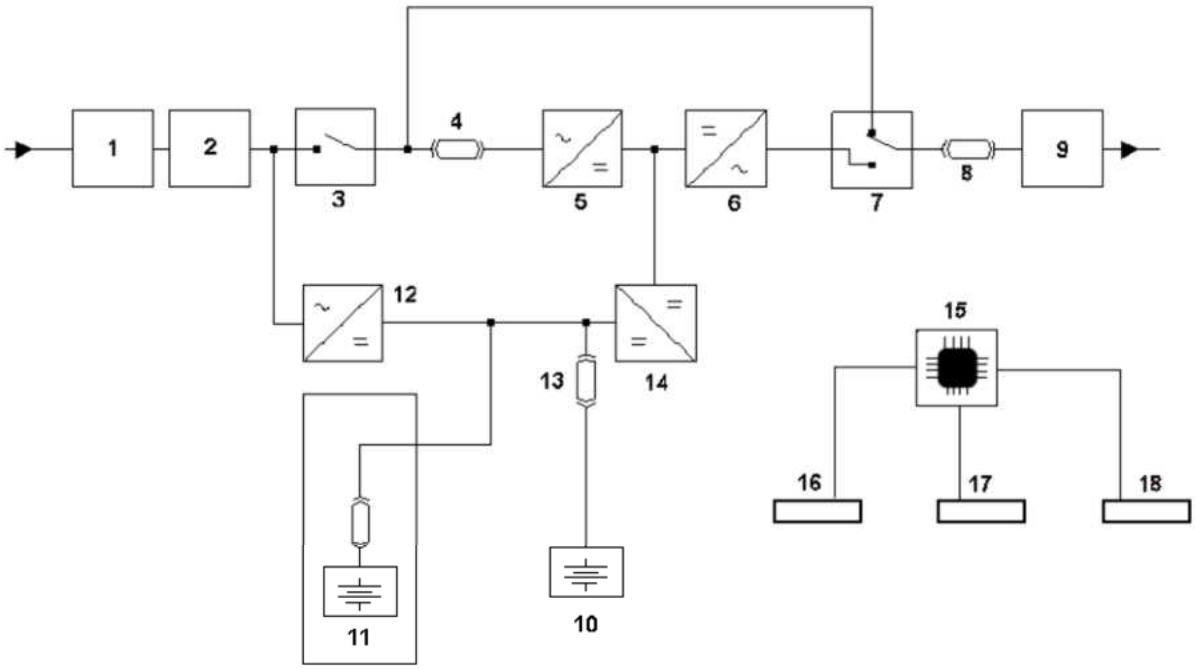

1) Resettable Input protection
2) Input filter
3) Back-feed relay
4) Input fuse
5) Rectifier
6) Inverter
7) Automatic By-pass
8) Output fuse (only for 2.2 and 3 kVA models)
9) Output filter (only for 2.2 and 3 kVA models)
10) Batteries
11) External batteries (optional)
12) Battery charger
13) Batteries fuse
14) DC/DC Boost
15) Microprocessor
16) Communication slot
17) RS232 and USB interface
18) LCD Display

5. COMMUNICATION PORTS AND FIRMWARE

The UPS comes with a standard RS232 port with input and output signals, a USB Port and an expansion slot for connecting additional electronic boards.

RS232 Connector

RS232 CONNECTOR

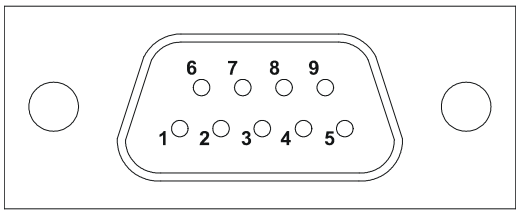

PIN #	SIGNAL	NOTES
1	Programmable output*: [default: UPS shutdown]	(*) Opto-isolated contact max. +30 Vdc / 35 mA. These contacts can be associated with other events using the appropriate software For additional information about interfacing with the UPS unit, please refer to the appropriate manual
2	TXD	
3	RXD	
4	NC	
5	GND	
6	DC Power Supply (Imax = 20 mA)	
7	NC	
8	Programmable output*: [default: discharge pre-alarm]	
9	Programmable output*: [default: battery-powered functionality]	

Communications Slot

The UPS comes supplied with an expansion slot for optional communication cards (see the diagram on the right), which can allow the device to communicate using the most common communication standards.
Some examples include:

- Additional RS232 and USB communication ports
- Serial duplicator
- Ethernet network card with TCP/IP, HTTP and SNMP protocols
- JBUS / MODBUS protocol converter card
- PROFIBUS protocol converter card
- Card with isolated relay contacts

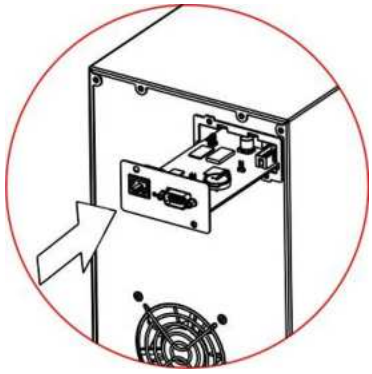

Please consult the website **www.ups-technet.com** to check the availability of additional accessories

5.1. Examples for connecting signals through the RS232 port

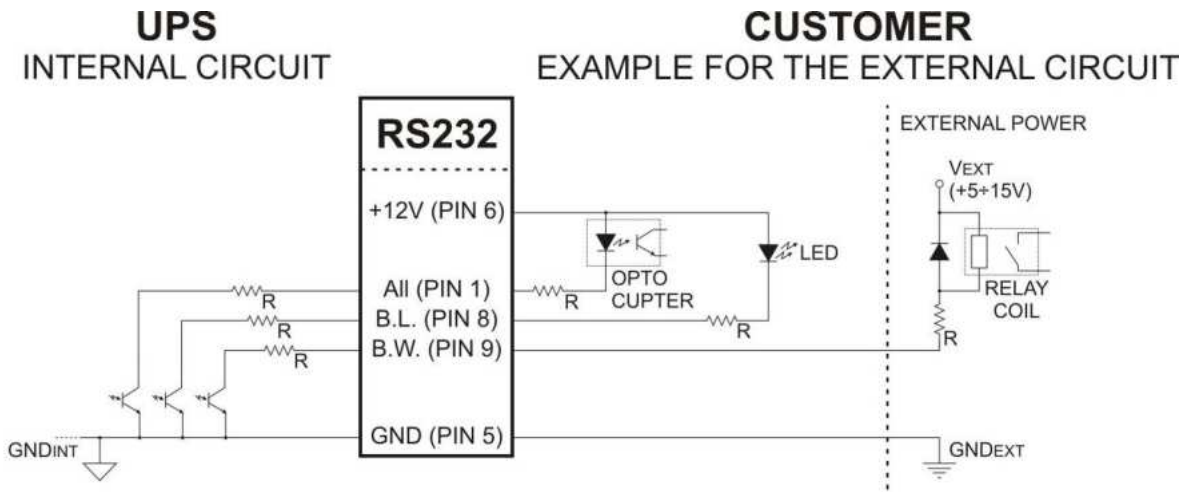

5.2. Technical data for "pin 6" power through the RS232 port

The voltage provided by the serial port's 6pin power depends on the absorbed current.

Vcc max: 10.8 Vdc without load
Vcc min: 8 Vdc @ 25 mA

5.3. Firmware

The firmware of the UPS unit can be updated by inserting the appropriate programming card into the expansion slot. This operation must be carried out by authorized personnel.

5.4. Examples for REPO connector connections

Connections for REPO functionality and remote ON/OFF

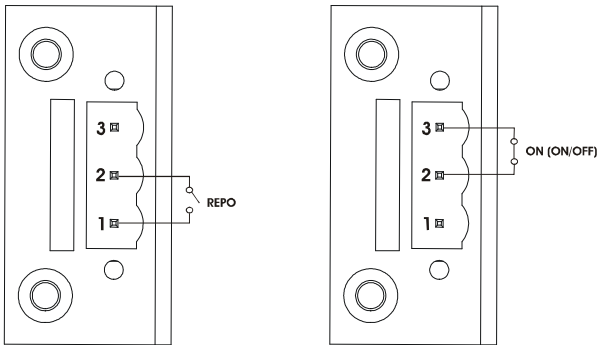

6. PROTECTION LEVEL IP21 (OPTIONAL)

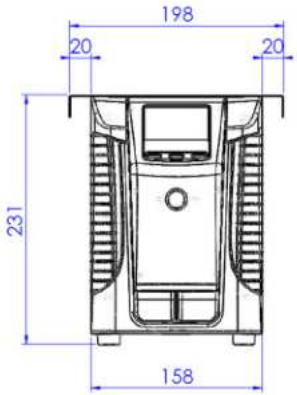

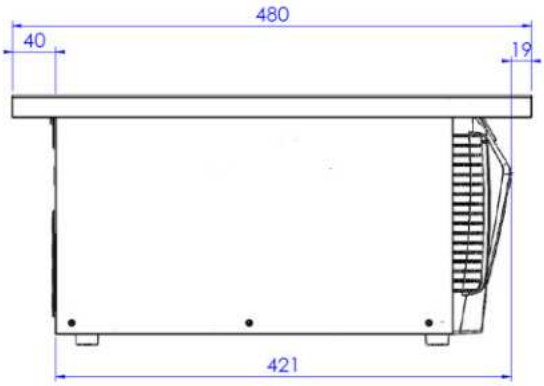

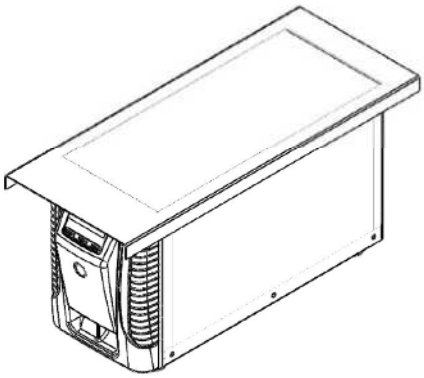

THE COMPANY

HEADQUARTERS

SCHRACK TECHNIK GMBH
Seybelgasse 13, A-1230 Vienna
PHONE +43(0)1/866 85-5900
FAX +43(0)1/866 85-98800
E-MAIL export@schrack.com

SCHRACK COMPANIES

BELGIUM
SCHRACK TECHNIK B.V.B.A
Twaalfapostelenstraat 14
BE-9051 St-Denijs-Westrem
PHONE +32 9/384 79 92
FAX +32 9/384 87 69
E-MAIL info@schrack.be

BOSNIEN-HERZEGOWINA
SCHRACK TECHNIK BH D.O.O.
Put za aluminijski kombinat bb
BH-88000 Mostar
PHONE +387/36 333 666
FAX +387/36 333 667
E-MAIL schrack@schrack.ba

BULGARIA
SCHRACK TECHNIK EOOD
Prof. Tsvetan Lazarov 162
Druzhba - 2
BG-1000 Sofia
PHONE +359/(2) 890 79 13
FAX +359/(2) 890 79 30
E-MAIL sofia@schrack.bg

CROATIA
SCHRACK TECHNIK D.O.O.
Zavrtnica 17
HR-10000 Zagreb
PHONE +385 1/605 55 00
FAX +385 1/605 55 66
E-MAIL schrack@schrack.hr

CZECH REPUBLIC
SCHRACK TECHNIK SPOL. SR.O.
Dolnomecholupska 2
CZ-10200 Praha 10 – Hostivar
PHONE +42(0)2/810 08 264
FAX +42(0)2/810 08 462
E-MAIL praha@schrack.cz

HUNGARY
SCHRACK TECHNIK KFT.
Vidor u. 5
H-1172 Budapest
PHONE +36 1/253 14 01
FAX +36 1/253 14 91
E-MAIL schrack@schrack.hu

GERMANY
SCHRACK TECHNIK GMBH
Thomas-Wimmer-Ring 17
D-80539 München
PHONE +49 89/999 533 900
FAX +49 89/999 533 902
E-MAIL info@schrack-technik.de

POLAND
SCHRACK TECHNIK POLSKA SP.ZO.O.
ul. Staniewicka 5
PL-03-310 Warszawa
PHONE +48 22/205 31 00
FAX +48 22/205 31 01
E-MAIL kontakt@schrack.pl

ROMANIA
SCHRACK TECHNIK SRL
Str. Simion Barnutiu nr. 15
RO-410204 Oradea
PHONE +40 259/435 887
FAX +40 259/412 892
E-MAIL schrack@schrack.ro

SERBIA
SCHRACK TECHNIK D.O.O.
Kumodraska 260
RS-11000 Beograd
PHONE +38 1/11 309 2600
FAX +38 1/11 309 2620
E-MAIL office@schrack.co.rs

SLOVAKIA
SCHRACK TECHNIK S.R.O.
Ivanská cesta 10/C
SK-82104 Bratislava
PHONE +42 (02)/491 081 01
FAX +42 (02)/491 081 99
E-MAIL info@schrack.sk

SLOVENIA
SCHRACK TECHNIK D.O.O.
Pameče 175
SLO-2380 Slovenj Gradec
PHONE +38 6/2 883 92 00
FAX +38 6/2 884 34 71
E-MAIL schrack.sg@schrack.si

WWW.SCHRACK.COM

TD_GENIO Tower Plus_0,7-3kVA_EN_2017_03
SPTSEPA1S17AREN

US Multicom 301/302 - Protocol Converter MODBUS/JBUS

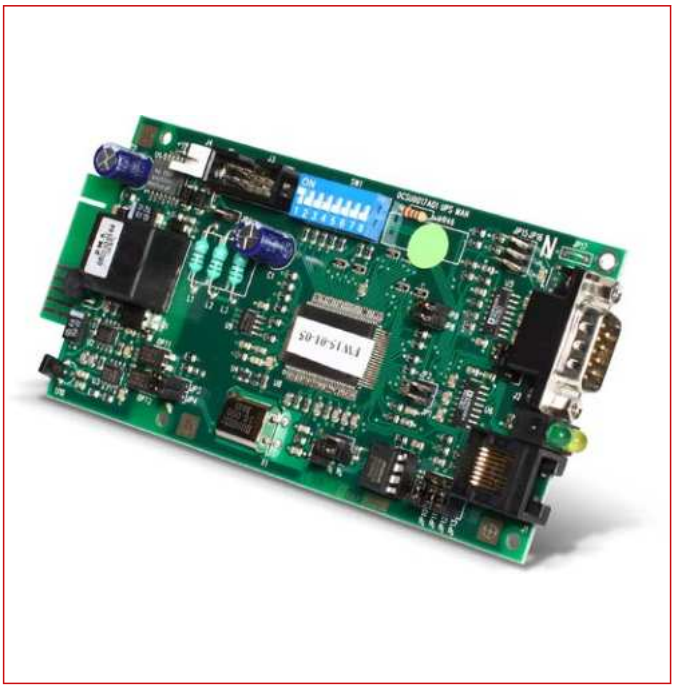

USMULTI302

Mobil Code

Schrack-Info

The MultiCOM 301/302 protocol converter allows UPS monitoring using the MODBUS/ JBUS protocol over RS232 or RS485 serial lines. In addition, it also manages a second independent RS232 serial line that can be used to connect to other devices such as the PLC or a PC running UPSMon software.

Features

- Configuration of the MODBUS/JBUS interface as RS232 or RS485
- Management of two independent serial lines
- Suitable for integration with the main BMS management programs

DESCRIPTION	AVAILABLE	STORE	ORDER NO.
J-Bus/ModBUS UPS interface via RS232/RS485min. boxed version			USMULTI301
J-Bus/ModBUS UPS interface via RS232/RS485min. plug in card			USMULTI302

FIȘĂ TEHNICĂ E-CCIE - Cheie comandă iluminat exterior/chei comandă încălzire

Nr Crt.	Specificațiile tehnice impuse prin Caietul de sarcini	Corespondența propunerii tehnice cu specificațiile tehnice impuse prin Caietul de sarcini	Producător
0	1	2	3
1.	**Parametrii tehnici şi funcţionali:** - Mâner negru, fond gri şi marcaj negru 0-1, unghi 90° - Număr etaje: 2 - Număr poziţii: 2 - Tensiune de izolare minim 600 Vca - Anduranţă mecanică: 500,000 cicluri - Anduranţă electrică: 200.000 cicluri - Curent nominal: minim 20A, - Tensiune nominal: 230/400V; 50/60Hz-AC; - Montaj: pe panou minisheller/pe uşă TGA - Poziţia cheilor vor fi preluate în PLC; - Grad de protecţie: minim IP 65 - Domeniu de temperatura: -25°C ....+50°C	**Parametrii tehnici şi funcţionali:** - Mâner negru, fond gri şi marcaj negru 0-1, unghi 90° - Număr etaje: 2 - Număr poziţii: 2 - Tensiune de izolare 690 Vca - Anduranţă mecanică: 500,000 cicluri - Anduranţă electrică: 1.000.000 cicluri - Curent nominal: minim 20A, - Tensiune nominal: 230/400V; 50/60Hz-AC; - Montaj: pe panou minisheller/pe uşă TGA - Poziţia cheilor vor fi preluate în PLC; - Grad de protecţie: IP 65 - Domeniu de temperatura: -25°C ....+55°C	**SCHNEIDER** **Cod: K2C003HCH**
2.	**Specificaţii de performanţă şi condiţii privind siguranta în exploatare:** - Protectia terminalelor la atingere cu mana. - Carcasă din material ABS; - Parte frontala clasa 2	**Specificaţii de performanţă şi condiţii privind siguranta în exploatare:** - Protectia terminalelor la atingere cu mana. - Carcasă din material ABS; - Parte frontala clasa 2	
3.	**Condiţii privind conformitatea cu standarde relevante:** - SR EN 60947-3 - SR EN 60529	**Condiţii privind conformitatea cu standarde relevante:** - SR EN 60947-3 - SR EN 60529	
4.	**Condiţii de garanţie şi postgaranţie:** - Producătorul va garanta calitatea şi buna funcţionare a produsului timp de 24 luni de la punerea în funcţiune sau de 36 luni de la data livrarii. - Produsul va corespunde normelor tehnice şi standardelor europene.	**Condiţii de garanţie şi postgaranţie:** - Producătorul va garanta calitatea şi buna funcţionare a produsului timp de 24 luni de la punerea în funcţiune sau de 36 luni de la data livrarii. - Produsul va corespunde normelor tehnice şi standardelor europene.	
5.	**Condiţii cu caracter tehnic:** - Nu vor fi luate în consideraţie decât ofertele însoţite de documentaţie completă pentru selecţie şi montaj în limba română. - Vor fi anexate: • instrucţiuni de montaj (scheme de conectare, broşuri, cataloage); • instrucţiuni de exploatare; • buletine de încercări, verificări, probe; • declaratie de conformitate.	**Condiţii cu caracter tehnic:** - Nu vor fi luate în consideraţie decât ofertele însoţite de documentaţie completă pentru selecţie şi montaj în limba română. - Vor fi anexate: • instrucţiuni de montaj (scheme de conectare, broşuri, cataloage); • instrucţiuni de exploatare; • buletine de încercări, verificări, probe; • declaratie de conformitate.	

Fişă tehnică produs

Specificatii

Green Premium

Comutator Cu Came - 3 Poli - 90° - 20 A - Pentru Ø 22 Mm

K2C003HCH

Principal

Gama De Produse	Harmony K
Tip Produs Sau Componenta	Comutator cu came complet
Nume Componenta	K2
[Ith] Curent Termic Conventional In Aer Liber	20 A
Locul De Montare	Fata
Mod De Fixare	Orificiu Ø 22 mm
Tipul Capului Comutatorului Cu Came	Cu placă frontală 45 x 45 mm
Tip De Operator	Negru maner, lungime = 35 mm
Blocare Cu Lacat Pentru Maner Rotativ	Fara
Prezentarea Legendei	Cu metalic legenda, 0 - 1 negru marcaj
Functie De Comutare Cam	Comutator
Revenire	Fara
Pozitie Decuplata	Cu pozitie Oprit
Descriere Poli	3P
Pozitii De Comutare	Dreapta: 0° - 90°
Grad De Protectie Ip	IP65 conforming to SR EN 60529

Suplimentar

Unghi De Comutatie	90 °
[Ui] Tensiune Nominala De Izolatie	690 V (grad de poluare 3) conformitate cu IEC 60947-1
[Ithe] Curent Termic Conventional In Incinta	16 A
Durabilitate Electrica	200000 cic AC-23 200000 cic AC-3 600000 cic AC-15 600000 cic AC-21
Viteza Maxima De Functionare	2,5 cic/mn AC-21 2,5 cic/mn AC-23 2,5 cic/mn AC-3 8,333 cic/mn AC-15
Curent De Scurtcircuit	10000 A
Protectie La Scurtcircuit	20 A cartuş fuzibil, tip gG
[Uimp] Tensiune De Tinere La Impuls	4 kV în funcția de izolație 6 kV conformitate cu IEC 60947-1
Operare Contacte	Decuplare lenta

Deschidere Pozitiva	Cu
Conexiune Electrica	Terminale captive cu șurub flexibil, capacitate de prindere: 2 x 1,5 mm² Terminale captive cu șurub solid, capacitate de prindere: 1 x 2,5 mm²
Durabilitate Mecanica	1000000 cic
Cad Latime Globala	45 mm
Cad Inaltime Globala	50 mm
Cad Adancime Globala	59 mm
Greutate Neta	0,155 kg

Mediu

Standarde	SR EN 60947-3 pentru circuit de alimentare SR EN 60947-5-1 pentru circuit de comanda CENELEC EN 50013 GB/T 14048.5 pentru circuit de comanda GB/T 14048.3 pentru circuit de alimentare
Certificari Produs	CSA 240 V 3 CP 3 faze 2 -pol(i) UL 240 V 0,33 CP 1 fază 2 -pol(i) CSA 240 V 1 CP 1 fază UL 240 V 1 CP 3 faze CCC
Tratament Protector	TC
Temperatura Ambientala De Functionare	-25…55 °C
Temperatura Ambietala Pentru Depozitare	-40…70 °C
Rezistenta La Socuri	30 gn conformitate cu IEC 68-2-27
Rezistenta La Vibratii	5 gn (f = 10…150 Hz) conformitate cu IEC 68-2-6
Categorie De Supratensiune	Clasa II conformitate cu IEC 536 Clasa II conformitate cu NF C 20-030

Unitati de ambalare

Unitate De Masura Pentru Prima Forma De Impachetare	PCE
Numar Unitati In Prima Forma De Impachetare	1
Inaltime Prima Forma De Impachetare	6,500 cm
Latime Prima Forma De Impachetare	6,500 cm
Lungime Prima Forma De Impachetare	11,000 cm
Greutate Prima Forma De Impachetare	173,000 g
Unitate De Masura Pentru A Doua Forma De Impachetare	S01
Numar Unitati In A Doua Forma De Impachetare	10
Inaltime A Doua Forma De Impachetare	15,000 cm
Latime A Doua Forma De Impachetare	15,000 cm
Lungime A Doua Forma De Impachetare	40,000 cm
Greutate A Doua Forma De Impachetare	1,874 kg
Unitate De Masura Pentru A Treia Forma De Impachetare	P06
Numar Unitati In A Treia Forma De Impachetare	320
Inaltime A Treia Forma De Impachetare	75,000 cm

Latime A Treia Forma De Impachetare	80,000 cm
Lungime A Treia Forma De Impachetare	60,000 cm
Greutate A Treia Forma De Impachetare	67,968 kg

Garanţie contractuală

Garantie	18 months

Sustenabilitate

Eticheta **Green Premium™** reprezinta angajamentul Schneider Electric de a livra produse cu cea mai buna performanta de mediu din clasa lor. Green Premium promite respectarea celor mai recente reglementari, transparenta in ceea ce priveste impactul asupra mediului, precum si produse circulare si cu emisii reduse de CO_2.

Ghidul pentru evaluarea sustenabilitatii produsului este un ghid care clarifica standardele globale de eticheta ecologica si modul de interpretare a declaratiilor de mediu.

Ghid pentru evaluarea sustenabilitatii unui produs >

Transparenta RoHS/REACh

Echipament sustenabil

Conform Reach Fara Svhc	
Fara Metale Grele Toxice	
Fara Mercur	
Informatii Privind Scutirea De La Rohs	Da

Certificari si standarde

Regulamentul Reach	Declaratia REACH
Directiva Rohs Ue	Conformitate proactivă (Produs în afara domeniului de aplicare a EU RoHS) Declaratia RoHS UE
Regulamentul Rohs China	Declaratia RoHS China
Raport De Mediu	Profilul ambiental al produsului
Weee	În Uniunea Europeana, produsele trebuie reciclate respectand sistemul specific de colectare a deseurilor si nu trebuie sa ajunga in pubelele de colectare a deseurilor menajere.
Profil Circularitate	Nu sunt necesare operatii de reciclare speciale

FIȘĂ TEHNICĂ E-CCD - Cheie comandă distanta/local si automat/manual TGA

Nr Crt.	Specificațiile tehnice impuse prin Caietul de sarcini	Corespondența propunerii tehnice cu specificațiile tehnice impuse prin Caietul de sarcini	Producător
0	1	2	3
1.	**Parametrii tehnici şi funcţionali:** - Selector cu reținere si comanda cu unghi de comutare 90° tip V - Prevăzut cu eticheta; - Tensiune de izolare minim 600 Vca - Tensiune nominala de tinere la impuls: 6kV; - Curent nominal contacte 6A, - Anduranță mecanica: 1.000.000 cicluri - Tensiune nominal: 230/400V; 50/60Hz-AC; - Montaj: pe ușă TGA - Grad de protecție: minim IP 65 - Domeniu de temperatura: -25° C ... +50° C	**Parametrii tehnici şi funcţionali:** - Selector cu reținere si comanda cu unghi de comutare 90° tip V - Prevăzut cu eticheta; - Tensiune de izolare minim 600 Vca - Tensiune nominala de tinere la impuls: 6kV; - Curent nominal contacte 6A, - Anduranță mecanica: 1.000.000 cicluri - Tensiune nominal: 230/400V; 50/60Hz-AC; - Montaj: pe ușă TGA - Grad de protecție: minim IP 65 - Domeniu de temperatura: -25° C ... +50° C	**SCHNEIDER**
2.	**Specificaţii de performanţă şi condiţii privind siguranta în exploatare:** - Protectia terminalelor la atingere cu mana. - Carcasă din material ABS; - Parte frontala clasa 2 - Diametru montaj 22mm	**Specificaţii de performanţă şi condiţii privind siguranta în exploatare:** - Protectia terminalelor la atingere cu mana. - Carcasă din material ABS; - Parte frontala clasa 2 - Diametru montaj 22mm	
3.	**Condiţii privind conformitatea cu standarde relevante:** - SR EN 60947-3 - SR EN 60529	**Condiţii privind conformitatea cu standarde relevante:** - SR EN 60947-3 - SR EN 60529	
4.	**Condiţii de garanţie şi postgaranţie:** - Producătorul va garanta calitatea şi buna funcţionare a produsului timp de 24 luni de la punerea în funcţiune sau de 36 luni de la data livrarii. - Produsul va corespunde normelor tehnice şi standardelor europene.	**Condiţii de garanţie şi postgaranţie:** - Producătorul va garanta calitatea şi buna funcţionare a produsului timp de 24 luni de la punerea în funcţiune sau de 36 luni de la data livrarii. - Produsul va corespunde normelor tehnice şi standardelor europene.	
5.	**Condiţii cu caracter tehnic:** - Nu vor fi luate în consideraţie decât ofertele însoţite de documentaţie completă pentru selecţie şi montaj în limba română. - Vor fi anexate: • instrucţiuni de montaj (scheme de conectare, broşuri, cataloage); • instrucţiuni de exploatare; • buletine de încercări, verificări, probe; • declaratie de conformitate.	**Condiţii cu caracter tehnic:** - Nu vor fi luate în consideraţie decât ofertele însoţite de documentaţie completă pentru selecţie şi montaj în limba română. - Vor fi anexate: • instrucţiuni de montaj (scheme de conectare, broşuri, cataloage); • instrucţiuni de exploatare; • buletine de încercări, verificări, probe; • declaratie de conformitate.	

Fișă tehnică produs
Caracteristici

XB4BD21
Comutator selector negru Ø22 ramanere in 2 pozitii 1NO 600V

Principale

Gama de produse	Harmony XB4
Tip produs sau componenta	Selector
Nume scurt al dispozitivului	XB4
Material rama	Metal cromat
Material inel de fixare	Zamak
Diametrul de montaj	22 mm
Vânzare în cantitate indivizibilă	1
Tip cap	Standard
Forma a capului unitatii de semnalizare	Rotund
Tip de operator	fără revenire
Profil operator	Negru mâner standard
Informatii de pozitie operator	2 pozitii 90°
Tip si compozitie contacte	1 NO
Operare contacte	Decuplare lenta
Conexiuni - borne	Borne cu șurub, <= 2 x 1.5 mm² cu pini conformitate cu EN/IEC 60947-1 Borne cu șurub, >= 1 x 0.22 mm² fara terminale de cablu conformitate cu EN/IEC 60947-1

Suplimentare

Înălțime	47 mm
Lățime	30 mm
Adâncime	68 mm
Descriere borne ISO nr. 1	(13-14)NO
Greutate produs	0,095 kg
Rezistență la spălare cu presiune inaltă	7000000 Pa la 55 °C, distanța : 0.1 m
Utilizare contacte	Contacte standard
Deschidere pozitiva	Fara

Valoare cuplu	0,14 N.m modificarea stării electrice NO
Durabilitate mecanică	1000000 cic
Cuplu de strângere	0,8…1,2 N.m conformitate cu EN 60947-1
Forma a capului surubului	Cruce compatibil cu Philips nr. 1 șurubelniță Cruce compatibil cu pozidriv No 1 șurubelniță Perforat compatibil cu plat Ø 4 mm șurubelniță Perforat compatibil cu plat Ø 5.5 mm șurubelniță
Material contacte	Aliaj de argint (Ag/Ni)
Protectie la scurtcircuit	10 A cartuș fuzibil tip gG conformitate cu SR EN 60947-5-1
[Ith] curent termic convențional în aer liber	10 A conformitate cu SR EN 60947-5-1
[Ui] tensiune nominala de izolatie	600 V (grad de poluare 3) conformitate cu EN 60947-1
[Uimp] tensiune de tinere la impuls	6 kV conformitate cu EN 60947-1
[Ie] curent nominal de utilizare	3 A la 240 V, AC-15, A600 conformitate cu SR EN 60947-5-1 6 A la 120 V, AC-15, A600 conformitate cu SR EN 60947-5-1 0,1 A la 600 V, DC-13, Q600 conformitate cu SR EN 60947-5-1 0,27 A la 250 V, DC-13, Q600 conformitate cu SR EN 60947-5-1 0,55 A la 125 V, DC-13, Q600 conformitate cu SR EN 60947-5-1 1,2 A la 600 V, AC-15, A600 conformitate cu SR EN 60947-5-1
Durabilitate electrică	1000000 cic, AC-15, 2 A la 230 V, rata de funcționare <3600 cic/h, factor de sarcină: 0,5 conformitate cu EN 60947-5-1 anexa C 1000000 cic, AC-15, 3 A la 120 V, rata de funcționare <3600 cic/h, factor de sarcină: 0,5 conformitate cu EN 60947-5-1 anexa C 1000000 cic, AC-15, 4 A la 24 V, rata de funcționare <3600 cic/h, factor de sarcină: 0,5 conformitate cu EN 60947-5-1 anexa C 1000000 cic, DC-13, 0,2 A la 110 V, rata de funcționare <3600 cic/h, factor de sarcină: 0,5 conformitate cu EN 60947-5-1 anexa C 1000000 cic, DC-13, 0,5 A la 24 V, rata de funcționare <3600 cic/h, factor de sarcină: 0,5 conformitate cu EN 60947-5-1 anexa C
Securitatea electrica IEC 60947-5-4	Λ < 10exp(-6) la 5 V și 1 mA în mediu curat conformitate cu EN/IEC 60947-5-4 Λ < 10exp(-8) la 17 V și 5 mA în mediu curat conformitate cu EN/IEC 60947-5-4
Prezentare dispozitiv	Produs complet

Mediu

Tratament protector	TH
Temperatura de depozitare	-40…70 °C
Temperatura ambiantă pentru utilizare	-40…70 °C
Categorie de supratensiune	Class I conformitate cu IEC 60536
Grad de protectie IP	IP69 IP69K IP67 conformitate cu SR EN 60529
Grad de protectie NEMA	NEMA 13 NEMA 4X
Standarde	CSA C22.2 No 15 SR EN 60947-5-1 JIS C8201-5-1 EN/IEC 60947-1 EN/IEC 60947-5-4 EN/IEC 60947-5-5 UL 508 JIS C8201-1
Certificari produs	RINA LROS (Lloyds register of shipping) BV UL GL CSA DNV
Rezistenta la vibratii	5 gn (f= 2…500 Hz) conformitate cu IEC 60068-2-6
Rezistenta la socuri	30 gn (durata = 18 ms) pentru half sine wave acceleration conformitate cu IEC 60068-2-27 50 gn (durata = 11 ms) pentru half sine wave acceleration conformitate cu IEC 60068-2-27

Unitati de impachetare

Greutatea formei de impachetare 1	0,091 kg
Inaltimea formei de impachetare 1	0,880 dm
Latimea formei de impachetare 1	0,340 dm
Lungimea formei de impachetare 1	0,540 dm

Durabilitatea ofertei

Stare ofertă sustenabilă	Produs Green Premium
Conform REACh fara SVHC	Da
Directiva RoHS UE	Conformitate proactivă (Produs în afara domeniului de aplicare a EU RoHS) Declaratia RoHS UE
Fara metale grele toxice	Da
Fara mercur	Da
Informatii privind scutirea de la RoHS	Da
Regulamentul RoHS China	Declaratia RoHS China
Raport de mediu	Profilul ambiental al produsului
Profil circularitate	Informatii privind sfarsitul duratei de viata
WEEE	În Uniunea Europeana, produsele trebuie reciclate respectand sistemul specific de colectare a deseurilor si nu trebuie sa ajunga in pubelele de colectare a deseurilor menajere.

Garanţie contractuală

Garantie	18 luni

FIȘĂ TEHNICĂ E-ESD - Buton oprire de urgență

Nr Crt.	Specificațiile tehnice impuse prin Caietul de sarcini	Corespondența propunerii tehnice cu specificațiile tehnice impuse prin Caietul de sarcini	Producător
0	1	2	3
1.	**Parametrii tehnici şi funcţionali:** - Buton cu reținere de culoare roșie montat in cutie, echipat cu eticheta inscripționată galbena si protecție împotriva declanșărilor accidentale - Tensiune nominala de tinere la impuls: 6kV; - Tensiune de izolare minim 600 Vca - Curent nominal contacte 6A, - Anduranță mecanica: 300.000 cicluri - Tensiune nominal: 230/400V; 50/60Hz-AC; - Montaj: pe ușă/lateral minishelter - Contact auxiliar va fi preluate in PLC; - Grad de protecție: minim IP 65 - Domeniu de temperatura: -25° C ... +50° C	**Parametrii tehnici şi funcţionali:** - Buton cu reținere de culoare roșie montat in cutie, echipat cu eticheta inscripționată galbena si protecție împotriva declanșărilor accidentale - Tensiune nominala de tinere la impuls: 6kV; - Tensiune de izolare minim 600 Vca - Curent nominal contacte 6A, - Anduranță mecanica: 300.000 cicluri - Tensiune nominal: 230/400V; 50/60Hz-AC; - Montaj: pe ușă/lateral minishelter - Contact auxiliar va fi preluate in PLC; - Grad de protecție: minim IP 65 - Domeniu de temperatura: -40° C ... +70° C	**SCHNEIDER**
2.	**Specificaţii de performanţă şi condiţii privind siguranta în exploatare:** - Protecția terminalelor la atingere cu mana. - Carcasa din policarbonat cu IP65; - Parte frontala clasa 2	**Specificaţii de performanţă şi condiţii privind siguranta în exploatare:** - Protecția terminalelor la atingere cu mana. - Carcasa din policarbonat cu IP66; - Parte frontala clasa 2	
3.	**Condiţii privind conformitatea cu standarde relevante:** - SR EN 60947-3 - SR EN 60529	**Condiţii privind conformitatea cu standarde relevante:** - SR EN 60947-3 - SR EN 60529	
4.	**Condiţii de garanţie şi postgaranţie:** - Producătorul va garanta calitatea şi buna funcţionare a produsului timp de 24 luni de la punerea în funcţiune sau de 36 luni de la data livrarii. - Produsul va corespunde normelor tehnice şi standardelor europene.	**Condiţii de garanţie şi postgaranţie:** - Producătorul garantează calitatea şi buna funcţionare a produsului timp de 24 luni de la punerea în funcţiune sau de 36 luni de la data livrarii. - Produsul corespunde normelor tehnice şi standardelor europene.	
5.	**Condiţii cu caracter tehnic:** - Nu vor fi luate în consideraţie decât ofertele însoţite de documentaţie completă pentru selecţie şi montaj în limba română. - Vor fi anexate: • instrucţiuni de montaj (scheme de conectare, broşuri, cataloage); instrucţiuni de exploatare; • buletine de încercări, verificări, probe; • declaratie de conformitate.	**Condiţii cu caracter tehnic:** - Nu vor fi luate în consideraţie decât ofertele însoţite de documentaţie completă pentru selecţie şi montaj în limba română. - Vor fi anexate: • instrucţiuni de montaj (scheme de conectare, broşuri, cataloage); instrucţiuni de exploatare; • buletine de încercări, verificări, probe; • declaratie de conformitate. -	

Fişă tehnică produs

Specificatii

Post De Comanda Xal-K - Functie De Oprire De Urgenta - 1 No + 1 Nc

XALK178E

Principal

Gama de produse	Harmony XALK
Tip produs sau componenta	Post de comanda complet
Nume scurt al dispozitivului	XALK
Destinatie produs	Pentru unitati de comanda si semnalizare XB5 Ø 22 mm
Aplicatie post de comanda	Functie de oprire de urgenta Functie de oprire de urgenta
Culoarea bazei carcasei	Gri deschis (RAL 7035)
Culoare a capacului	Galben (RAL 1021)
Material	Policarbonat
Profil operator	1 buton tip ciuperca
Descriere operatori	Roșu fără marcare 1 NO + 1 NC
Resetare	Rotire pentru eliberare
Compozitie post de comanda	1 cap de buton ciupercă Ø 40 mm, rosu 1 NO + 1 NC nemarcat marcaj
Operare contacte	Decuplare lenta

Suplimentar

Intrare pentru cablu	1 perforație pentru o intrare de cablu 0…14 mm 2 găuri predefinite pentru presetupe Pg 13 și ISO M20 0…12 mm
Greutate neta	0,194 kg
Rezistenta la spalare cu presiune inalta	7000000 Pa la 55 °C, distanța : 0.1 m
Deschidere pozitiva	Cu conformitate cu EN/IEC 60947-5-1 anexa K
Cursa de operare	1,5 mm (schimbare stare electrică NC) 2,6 mm (modificarea stării electrice NO) 4,3 mm (cursă totală)
Forta de actionare	44 N schimbare stare electrică NC + NO
Durabilitate mecanica	300000 cic
Conexiuni - borne	Borne cu surub, <= 2 x 1.5 mm² cu pini conformitate cu EN/IEC 60947-1 Borne cu surub, >= 1 x 0.22 mm² fara terminale de cablu conformitate cu EN/IEC 60947-1
Cuplu de strangere	0,8…1,2 N.m conformitate cu EN/IEC 60947-1
Forma a capului surubului	Cruce compatibil cu Philips nr. 1 șurubelniță Cruce compatibil cu pozidriv No 1 șurubelniță Perforat compatibil cu plat Ø 4 mm șurubelniță Perforat compatibil cu plat Ø 5.5 mm șurubelniță

Material contacte	Aliaj de argint (Ag/Ni)
Protectie la scurtcircuit	10 A cartuș fuzibil tip gG conformitate cu SR EN 60947-5-1
[Ith] curent termic conventional in aer liber	10 A conformitate cu SR EN 60947-5-1
[Ui] tensiune nominala de izolatie	600 V (grad de poluare 3) conformitate cu EN/IEC 60947-1
[Uimp] tensiune de tinere la impuls	6 kV conformitate cu EN/IEC 60947-1
[Ie] curent nominal de utilizare	3 A la 240 V, AC-15, A600 conformitate cu SR EN 60947-5-1 6 A la 120 V, AC-15, A600 conformitate cu SR EN 60947-5-1 0,1 A la 600 V, DC-13, Q600 conformitate cu SR EN 60947-5-1 0,27 A la 250 V, DC-13, Q600 conformitate cu SR EN 60947-5-1 0,55 A la 125 V, DC-13, Q600 conformitate cu SR EN 60947-5-1 1,2 A la 600 V, AC-15, A600 conformitate cu SR EN 60947-5-1
Durabilitate electrica	1000000 cic, AC-15, 2 A la 230 V, rata de funcționare <3600 cic/h, factor de sarcină: 0,5 conformitate cu EN/IEC 60947-5-1 anexa C 1000000 cic, AC-15, 3 A la 120 V, rata de funcționare <3600 cic/h, factor de sarcină: 0,5 conformitate cu EN/IEC 60947-5-1 anexa C 1000000 cic, AC-15, 4 A la 24 V, rata de funcționare <3600 cic/h, factor de sarcină: 0,5 conformitate cu EN/IEC 60947-5-1 anexa C 1000000 cic, DC-13, 0,2 A la 110 V, rata de funcționare <3600 cic/h, factor de sarcină: 0,5 conformitate cu EN/IEC 60947-5-1 anexa C 1000000 cic, DC-13, 0,5 A la 24 V, rata de funcționare <3600 cic/h, factor de sarcină: 0,5 conformitate cu EN/IEC 60947-5-1 anexa C
Securitatea electrica IEC 60947-5-4	Λ < 10exp(-6) la 5 V, 1 mA conformitate cu EN/IEC 60947-5-4 Λ < 10exp(-8) la 17 V, 5 mA conformitate cu EN/IEC 60947-5-4

Mediu

Tratament protector	TH
Temperatura de depozitare	-40…70 °C
Temperatura ambientala de functionare	-40…70 °C
Categorie de supratensiune	Clasa II conformitate cu IEC 60536
Grad de protectie IP	IP66 conformitate cu SR EN 60529 IP67 IP69 IP69K
Grad de protectie NEMA	NEMA 13 NEMA 4X
Grad de protectie IK	IK03 conformitate cu EN 50102
Standarde	EN/IEC 60947-5-4 CSA C22.2 No 15 UL 60947-1 EN/IEC 60947-5-5 EN/ISO 13850 SR EN 60947-5-1 JIS C 4520 IEC 60364-5-53 EN/IEC 60947-1 EN/IEC 60204-1
Rezistenta la vibratii	5 gn (f= 12…500 Hz) conformitate cu IEC 60068-2-6
Rezistenta la socuri	30 gn (durata = 18 ms) pentru half sine wave acceleration conformitate cu IEC 60068-2-27 50 gn (durata = 11 ms) pentru half sine wave acceleration conformitate cu IEC 60068-2-27

Unitati de ambalare

Unitate de masura pentru prima forma de impachetare	PCE
Numar unitati in prima forma de impachetare	1
Inaltime prima forma de impachetare	9,7 cm
Latime prima forma de impachetare	7 cm

Lungime prima forma de impachetare	7 cm
Greutate prima forma de impachetare	167 g
Unitate de masura pentru a doua forma de impachetare	S03
Numar unitati in a doua forma de impachetare	40
Inaltime a doua forma de impachetare	30 cm
Latime a doua forma de impachetare	30 cm
Lungime a doua forma de impachetare	40 cm
Greutate a doua forma de impachetare	7,18 kg
Unitate de masura pentru a treia forma de impachetare	P06
Numar unitati in a treia forma de impachetare	320
Inaltime a treia forma de impachetare	77 cm
Latime a treia forma de impachetare	80 cm
Lungime a treia forma de impachetare	60 cm
Greutate a treia forma de impachetare	67,644 kg

Sustenabilitatea ofertei

Stare ofertă sustenabilă	Produs Green Premium
Regulamentul REACH	Declaratia REACH
Conform REACh fara SVHC	Da
Directiva RoHS UE	Conformitate proactivă (Produs în afara domeniului de aplicare a EU RoHS) Declaratia RoHS UE
Fara metale grele toxice	Da
Fara mercur	Da
Regulamentul RoHS China	Declaratia RoHS China
Informatii privind scutirea de la RoHS	Da
Raport de mediu	Profilul ambiental al produsului
Profil circularitate	Informatii privind sfarsitul duratei de viata
WEEE	În Uniunea Europeana, produsele trebuie reciclate respectand sistemul specific de colectare a deseurilor si nu trebuie sa ajunga in pubelele de colectare a deseurilor menajere.

Garanţie contractuala

Garantie	18 luni

Dimensions

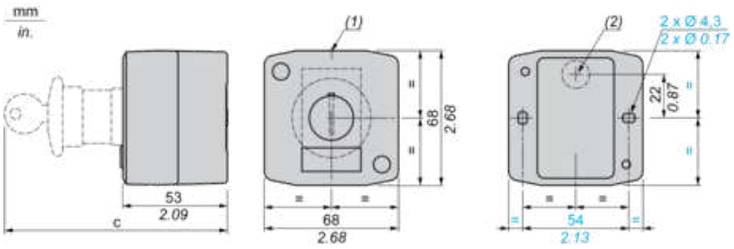

(1) 2 knock-outs for Pg 13.5 cable gland, maximum capacity 12 mm/0.47 in.

(2) Knock-out for cable entry, maximum capacity 14 mm/0.55 in.

Control station fitted with:	c in mm	c in in.
Flush pushbutton	62	2.44
Pilot light	64	2.52
Illuminated pushbutton	65.5	2.58
Projecting pushbutton	66	2.60
Selector switch	80	3.15
Mushroom head pushbutton	91.5	3.58
Latching mushroom head Emergency stop pushbutton wit h key	115	4.53
Key switch	105.5	4.15

Substitutii recomandate

Product datasheet

Specifications

marked legend Ø60 for emergency stop - EMERGENCY STOP/logo ISO13850

ZBY9330M

Main

Range Of Product	Harmony XB4 Harmony XB5
Product Or Component Type	Marked legend
Accessory / Separate Part Type	Legend
Accessory / Separate Part Category	Marking accessories
Marking	Black EMERGENCY STOP on yellow background
Label Dimensions	Ø 60 mm
Language	English

Complementary

Sale Per Indivisible Quantity	10
Net Weight	0.004 kg

Environment

Standards	IEC 60947-5-5 IEC 60204-1 EN/ISO 13850: 2006

Packing Units

Unit Type Of Package 1	PCE
Number Of Units In Package 1	1
Package 1 Height	1.0 cm
Package 1 Width	6.0 cm
Package 1 Length	6.0 cm
Package 1 Weight	2.0 g
Unit Type Of Package 2	BAG
Number Of Units In Package 2	10
Package 2 Height	6.0 cm
Package 2 Width	1.0 cm
Package 2 Length	6.0 cm
Package 2 Weight	20.0 g
Unit Type Of Package 3	S01
Number Of Units In Package 3	250

Package 3 Height	15.0 cm
Package 3 Width	15.0 cm
Package 3 Length	40.0 cm
Package 3 Weight	687.0 g

Sustainability

Green Premium™ label is Schneider Electric's commitment to delivering products with best-in-class environmental performance. Green Premium promises compliance with the latest regulations, transparency on environmental impacts, as well as circular and low-CO_2 products.

Guide to assessing product sustainability is a white paper that clarifies global eco-label standards and how to interpret environmental declarations.

Learn more about Green Premium >

Guide to assess a product's sustainability >

Well-being performance

Reach Free Of Svhc	
Toxic Heavy Metal Free	
Mercury Free	
Rohs Exemption Information	Yes

Reach Regulation	REACh Declaration
Eu Rohs Directive	Compliant EU RoHS Declaration
China Rohs Regulation	China RoHS declaration
Weee	The product must be disposed on European Union markets following specific waste collection and never end up in rubbish bins

Product datasheet

Specifications

Green Premium™

yellow metal padlockable guard for Ø40 mushroom head

ZBZ1605

Main

Range Of Product	Harmony XB4 Harmony XB5
Product Or Component Type	Guard
Accessory / Separate Part Category	Isolation accessory
Product Compatibility	XB4BS9 XB4BS8 ZB5AS8. ZB4BS8 XB5AT8. ZB5AT8. ZB4BS9 XB5AS9. XB5AS8. ZB4BT8 ZB5AS9. XB4BT8
Accessory / Separate Part Destination	Ø 40 mm emergency stop push-button For standard head
Colour	Yellow
Quantity Per Set	Set of 1

Complementary

Material	Metal
Net Weight	0.046 kg

Packing Units

Unit Type Of Package 1	PCE
Number Of Units In Package 1	1
Package 1 Height	5.700 cm
Package 1 Width	4.400 cm
Package 1 Length	5.200 cm
Package 1 Weight	59.000 g
Unit Type Of Package 2	BB1
Number Of Units In Package 2	5
Package 2 Height	5.700 cm
Package 2 Width	4.400 cm
Package 2 Length	26.500 cm
Package 2 Weight	295.000 g

Unit Type Of Package 3	S03
Number Of Units In Package 3	160
Package 3 Height	30.000 cm
Package 3 Width	30.000 cm
Package 3 Length	40.000 cm
Package 3 Weight	9.880 kg

Contractual warranty

Warranty	12 months

Sustainability

Green Premium™ label is Schneider Electric's commitment to delivering products with best-in-class environmental performance. Green Premium promises compliance with the latest regulations, transparency on environmental impacts, as well as circular and low-CO_2 products.

Guide to assessing product sustainability is a white paper that clarifies global eco-label standards and how to interpret environmental declarations.

Learn more about Green Premium >

Guide to assess a product's sustainability >

Transparency RoHS/REACh

Well-being performance

Reach Free Of Svhc	
Toxic Heavy Metal Free	
Mercury Free	
Rohs Exemption Information	Yes

Certifications & Standards

Reach Regulation	REACh Declaration
Eu Rohs Directive	Pro-active compliance (Product out of EU RoHS legal scope) EU RoHS Declaration
China Rohs Regulation	China RoHS declaration
Environmental Disclosure	Product Environmental Profile
Circularity Profile	End of Life Information

FISA TEHNICA E-CIE
Corp de iluminat exterior cu tehnologie LED

Nr Crt.	Specificațiile tehnice impuse prin Caietul de sarcini	Corespondența propunerii tehnice cu specificațiile tehnice impuse prin Caietul de sarcini	Producător
0	1	2	3
1.	**Parametrii tehnici si funcţionali:** Domeniu de utilizare:- Iluminat exterior Putere: minim 40W; Flux net total iniţial: minim 5500Lm; Tensiune de alimentare: 230V/50Hz; Eficacitate luminoasă globală netă: minim 125 (lm/W); Carcasă din aluminiu turnat sub presiune, vopsit în câmp electrostatic; Grad de protecţie IP66; Temperatura de funcţionare nominală de la -25° C ... +45° C; Factor de putere: min. 0,96; Sursa de lumină utilizată: LED-uri de putere, cu temperatura de culoare alb-neutru 4000k,CRI minim 70,durata lunga de viata L70B50 de minim 50000 ore de functionare la T=250C; Protectie contra descarcarilor atmosferice:6kV	**Parametrii tehnici si funcţionali:** Domeniu de utilizare:- Iluminat exterior Putere: minim 40W; Flux net total iniţial: minim 5500Lm; Tensiune de alimentare: 230V/50Hz; Eficacitate luminoasă globală netă: minim 125 (lm/W); Carcasă din aluminiu turnat sub presiune, vopsit în câmp electrostatic; Grad de protecţie IP66; Temperatura de funcţionare nominală de la -25° C ... +45° C; Factor de putere: min. 0,96; Sursa de lumină utilizată: LED-uri de putere, cu temperatura de culoare alb-neutru 4000k,CRI minim 70,durata lunga de viata L70B50 de minim 50000 ore de functionare la T=250C; Protectie contra descarcarilor atmosferice:6kV	Elba
2.	**Specificaţii de performanţă şi condiţii privind siguranta în exploatare:** Montaj pe stâlp, în consolă pe teavă ϕ60-65mm;	**Specificaţii de performanţă şi condiţii privind siguranta în exploatare:** Montaj pe stâlp, în consolă pe teavă ϕ60-65mm;	
3.	**Condiţii privind conformitatea cu standarde relevante:** Corpurile vor fi inscripţionate cu marcajuI CE; Corespunde standardelor pentru corpuri de iluminat: SR EN 60559-1, SR EN 60598-2-3, SR-EN 62031	**Condiţii privind conformitatea cu standarde relevante:** Corpurile vor fi inscripţionate cu marcajuI CE; Corespunde standardelor pentru corpuri de iluminat: SR EN 60559-1, SR EN 60598-2-3, SR-EN 62031	
4.	**Condiţii de garanţie şi postgaranţie:** Producătorul va garanta calitatea şi buna funcţionare a produsului timp de 24 luni de la punerea în funcţiune sau de 36 luni de la data livrarii. Produsul va corespunde normelor tehnice şi standardelor europene.	**Condiţii de garanţie şi postgaranţie:** Producătorul va garanta calitatea şi buna funcţionare a produsului timp de 24 luni de la punerea în funcţiune sau de 36 luni de la data livrarii. Produsul va corespunde normelor tehnice şi standardelor europene.	
5.	**Condiţii cu caracter tehnic:**	**Condiţii cu caracter tehnic:**	

	Nu vor fi luate în consideraţie decât ofertele însoţite de documentaţie completă pentru selecţie şi montaj în limba română. Vor fi anexate:instrucţiuni de montaj (scheme de conectare, broşuri, cataloage); instrucţiuni de exploatare;buletine de încercări, verificări, probe; declaratie de conformitate.	Nu vor fi luate în consideraţie decât ofertele însoţite de documentaţie completă pentru selecţie şi montaj în limba română. Vor fi anexate:instrucţiuni de montaj (scheme de conectare, broşuri, cataloage); instrucţiuni de exploatare;buletine de încercări, verificări, probe; declaratie de conformitate.	

Corp de iluminat stradal și rezidențial

CRIOTEK LC LED

CRIOTEK-01 LC LED, CRIOTEK-02 LC LED, CRIOTEK-03 LC LED

Despre produs

Familia de corpuri de iluminat stradal performant CRIOTEK LED reprezintă soluția provocărilor cu care se confruntă autoritățile municipale - să asigure securitatea oamenilor economisind în acelaşi timp energie, şi să diminueze costurile de întreținere.
Corpul de ilumininat stradal performant CRIOTEK LED combină un design distinct cu iluminatul de calitate superioară, integrându-se perfect în arhitectura urbană.
Este o familie de corpuri de iluminat moderne pentru iluminatul stradal, cu surse de lumină de ultimă generație cu durată de viață prelungită, fiind echipat cu module LED de înaltă peformanță.
Este eficient din punct de vedere energetic şi are un impact pozitiv asupra protecției mediului.
Sistemul optic performant, cu o distribuție uniformă permite înlocuirea soluțiilor HID fără a compromite

EN 60598	RoHS	IP66	⏚	-30°C÷ +45°C	25W÷137W LED

distanțele, înălțimea de montare sau calitatea luminii. Nu necesită intervenții pentru înlocuirea surselor de lumină iar carcasa metalică asigură reciclarea.
Montarea pe braț și variantele dimensionale permit o amplasare flexibilă.

Domeniu de utilizare

Iluminatul stradal pentru drumuri principale, locale, secundare, cu clasele de iluminare ME2, ME3, ME4, ME5, ME6, S1÷S6, conform SR EN 13201. Iluminatul rezidențial pentru alei, trotuare, parcuri, treceri de pietoni. Parcări, gări, autogări, spații publice largi, etc.

Sursa de lumină utilizată

- LED-uri de putere, cu sistem optic specializat pentru iluminat stradal şi rezidențial, cu temperatura de culoare alb-neutru 4000K, CRI≥70 sau alb-rece 5000K, CRI≥70, cu o durată lungă de viață, la Ta=25ºC:

L70B50	L80B10	L90B10
300.000 ore	152.000 ore	66.000 ore

- La cerere cu LED-uri cu temperatura de culoare alb-rece 5700K CRI≥70.
- Sistemul cu LED-uri inclus în produs înlocuieşte /este echivalent cu:
    - Lămpile cu: vapori de mercur HME 80W, vapori de sodiu HST 50W
    - Lămpile cu: halogenuri metalice HIT 50W, vapori de sodiu HSE 70W
    - Lămpile cu: vapori de mercur HME 250W, halogenuri metalice HIT 100W, vapori de sodiu HST 100W,
    - Lămpile cu: vapori de mercur HME 250W, halogenuri metalice HIT 150W, vapori de sodiu HST 150W, HSE 150W

Avantaje

Un corp de iluminat modern, cu surse de lumină tip LED. Consum redus de energie. Durată de viață prelungită. Prietenos cu mediul înconjurător. Ideal pentru înlocuirea corpurilor de iluminat stradale cu lămpi fluorescente compacte, cu sodiu, cu halogenuri metalice. Costuri reduse de întreținere. Nu sunt necesare intervenții pentru înlocuirea în exploatare a surselor de lumină.

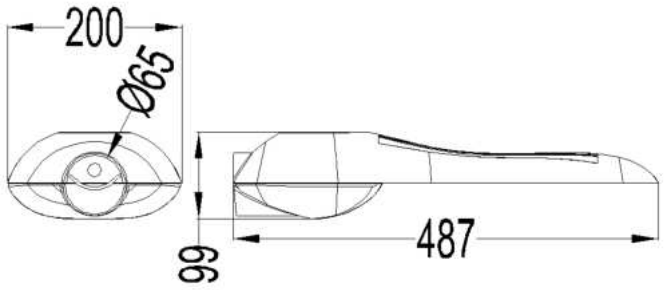

Accesoriu optional – ȘTUȚ CU INDEXARE 0-90°

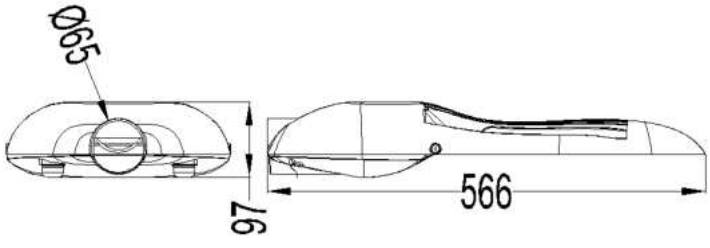

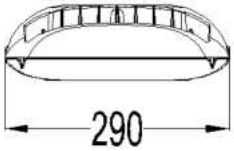

BRIDA MONTARE

Tip produs	L [mm]	l [mm]	h [mm]	m [mm]
CRIOTEK-01 LED	487	200	99	Φ60-65mm cu bride Φ48-60mm
CRIOTEK-02 LED	566	290	97	Φ60-65mm cu bride Φ48-60mm
CRIOTEK-03 LED	566	290	97	Φ60-65mm cu bride Φ48-60mm

CRIOTEK-03 LED

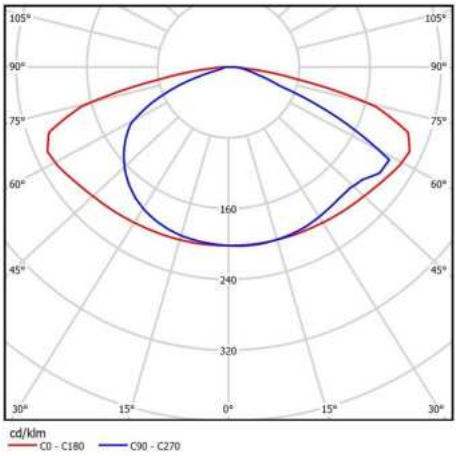

Date fotometrice CRIOTEK-03 LED

Randam: 91%

Curba de distribuție a intensității luminoase [Cd/1000lm]

Descriere

- Carcasă din aluminiu turnat sub presiune vopsită în câmp electrostatic.
- Sistemul optic din policarbonat e conceput pentru a îndeplini cerințele standardului SR EN 13201 pentru iluminat stradal și cuprinde LED-uri de putere cu sistemul de orientare a fluxului luminos specializat pentru iluminatul rutier.
- Aparataj (driver electronic) inclus în produs şi executat în conformitate cu normativele specifice.
- Posibilitate reglaj de flux (dimming)(DIM) analogic 0-10V conform Instrucțiune de montare-exploatare.
- Subansamblu placă aparataj este amovibil.
- Protecție contra descărcărilor atmosferice: 6KV
- Culoare: gri.

Variante la cerere

- Cu LED-uri cu temperatura de culoare alb-rece 5700K CRI≥70.
- Cu bride pentru țeavă Φ48 -Φ60mm.
- Ștuț de aluminiu cu indexare 0÷90° pentru fixare pe consolă sau vârf de stâlp (M000024008)
- Produsul poate fi echipat cu conector cu grad de protecție – alimentare 230V – alimentare modul LED

Montaj

- Sistemul de montare pe stâlp din capătul carcasei permite montarea în consolă, pe țeavă Φ60 - Φ65mm.
- Cu bride pentru țeavă Φ48 -Φ60mm.
- CRIOTEK-01 LED: Suprafața vânt max.=0,048 m^2;
  CRIOTEK-02, CRIOTEK-03 LED: Suprafața vânt max.=0,054 m^2;
- Înălțime de montare recomandată: max 5-15m
  CRIOTEK-01 LED: 5-6m, CRIOTEK-02 LED: 6-8m, CRIOTEK-03 LED: 9-10m.

Caracteristici tehnice

- Tensiunea de alimentare: 230V/50Hz
- Domeniu de temperatură ambientală: -30˚C...+ 45˚C.
- Umiditate relativă până la 80% la temperatura de + 20˚C
- Rezistența la impact mecanic: IK10
- Corespunde standardelor pentru corpuri de iluminat: SR EN 60598-1, SR EN 60598-2-3.

Conformitate cu Directivele Europene

- Directiva de Joasă Tensiune.
- Directiva de Compatibilitate Electromagnetică.
- Directiva RoHS. Directiva DEEE.

Produsul poate fi realizat în mai multe variante în funcție de număr LED-uri, putere, temperatură de culoare LED.

Tip produs	Cod produs	Tens. nom. [V]	Putere activă [W]	Factor putere	Grad de protecție	Clasa de protecție	IK	Masa [Kg]	Flux total net inițal [lm]	Eficacitate luminoasă globală netă [lm/W]
CRIOTEK-01 LC 16LED										
CRIOTEK-01 LC LED 3385LM 25.1W 740 DIM	35617290	230	25.1	≥0.96	IP66	I	IK10	2.1	3385	135
CRIOTEK-01 LC LED 4164LM 30.5W 740 DIM	35617291	230	30.5	≥0.96	IP66	I	IK10	2.1	4164	137
CRIOTEK 01 LC LED 4164LM 30.5W 750 DIM	35617350	230	30.5	≥0.96	IP66	I	IK10	2.1	4164	137
CRIOTEK-01 LC LED 6120LM 44.8W 740 DIM	35617292	230	44.8	≥0.96	IP66	I	IK10	2.1	6120	137
CRIOTEK-02 LC 32LED										
CRIOTEK-02 LC LED 8090LM 60W 740 DIM	35617293	230	60	≥0.96	IP66	I	IK10	4.8	8090	135
CRIOTEK-02 LC LED 8090LM 60W 740	35617366	230	60	≥0.96	IP66	I	IK10	4.8	8090	135
CRIOTEK 02 LC LED 8090LM 60W 750 DIM	35617351	230	60	≥0.96	IP66	I	IK10	4.8	8090	135
CRIOTEK-02 LC LED 10968LM 80W 740 DIM	35617294	230	80	≥0.96	IP66	I	IK10	4.8	10968	137
CRIOTEK-03 LC 48LED										
CRIOTEK-03 LC LED 15208LM 115W 740 DIM	35617295	230	115	≥0.96	IP66	I	IK10	4.8	15208	132
CRIOTEK-03 LC LED 17527LM 125W 740 DIM	35617296	230	125	≥0.96	IP66	I	IK10	4.8	17527	140
CRIOTEK 03 LC LED 17527LM 125W 750 DIM	35617352	230	125	≥0.96	IP66	I	IK10	4.8	17527	140
PS. BRIDA CRIOTEK 01	03116864	-	-	-	-	-	-	0.1	-	-
PS. KIT BRIDE CRIOTEK 02-03	03216864	-	-	-	-	-	-	0.2	-	-
ȘTUȚ DE ALUMINIU CU INDEXARE 0÷90°	M000024008	-	-	-	-	-	-	1.0	-	-

DIM = cu driver cu posibilitate reglaj de flux 0-10V conform Instrucțiune de montare-exploatare,

740 = 4000K 70CRI, 750 = 5000K 70CRI

Toleranța fluxului inițial și a puterii active inițiale este de ±10% din valoarea specificată. Aceste valori sunt măsurate la temperatura ambientală de 25°C dacă nu este menționată altă temperatură.

ELBA S.A dezvoltă continuu produsele. Ne rezervăm dreptul de a modifica specificațiile tehnice în scopul ameliorării produselor noastre, fără notificare prealabilă sau anunț public.

FIȘĂ TEHNICĂ E-CJEx - Cutie de jonctiuni pentru mediu Ex

Nr Crt.	Specificațiile tehnice impuse prin Caietul de sarcini	Corespondența propunerii tehnice cu specificațiile tehnice impuse prin Caietul de sarcini	Producător
0	1	2	3
1.	**Parametrii tehnici si funcționali:** - Curent nominal: 6A-16A (conf. proiect) - Sir de cleme: Conform proiect - Presetupe Ex pentru cabluri armate: Minim 12 pentru cabluri conform specificațiilor din proiect - Dopuri pentru intrările de rezerva, dop anti condens, șurub de împământare - Grad de protecție: IP66 - Temperatura de lucru: -25° C ... +50° C; - Marcare Ex: grupa II zona 2 - Temp. max. de suprafață: T4 - Tensiune nominala: 400 Vca - Culoare: Gri, negru	**Parametrii tehnici si funcționali:** - Curent nominal: 6A-16A (conf. proiect) - Sir de cleme: Conform proiect - Presetupe Ex pentru cabluri armate: Minim 12 pentru cabluri conform specificațiilor din proiect - Dopuri pentru intrările de rezerva, dop anti condens, șurub de împământare - Grad de protecție: IP66 - Temperatura de lucru: -25° C ... +50° C; - Marcare Ex: grupa II zona 2 - Temp. max. de suprafață: T4 - Tensiune nominala: 400 Vca - Culoare: Gri, negru	**QUINTEX**
2.	**Specificaţii de performanţă şi condiţii privind siguranta în exploatare:** - Se montează mecanic in zone cu pericol de explozie pe peretele cofretului SRM	**Specificaţii de performanţă şi condiţii privind siguranta în exploatare:** - Se montează mecanic in zone cu pericol de explozie pe peretele cofretului SRM	
3.	**Condiţii privind conformitatea cu standarde relevante:** - SR EN 60679; - SR EN 60529	**Condiţii privind conformitatea cu standarde relevante:** - SR EN 60679; - SR EN 60529	
4.	**Condiţii de garanţie şi postgaranţie:** - Producătorul va garanta calitatea şi buna funcţionare a produsului timp de 24 luni de la punerea în funcţiune sau de 36 luni de la data livrarii. - Produsul va corespunde normelor tehnice şi standardelor europene.	**Condiţii de garanţie şi postgaranţie:** - Producătorul va garanta calitatea şi buna funcţionare a produsului timp de 24 luni de la punerea în funcţiune sau de 36 luni de la data livrarii. - Produsul va corespunde normelor tehnice şi standardelor europene.	
5.	**Condiţii cu caracter tehnic:** - Nu vor fi luate în consideraţie decât ofertele însoţite de documentaţie completă pentru selecţie şi montaj în limba română. - Vor fi anexate: • instrucţiuni de montaj (scheme de conectare, broşuri, cataloage); • instrucţiuni de exploatare; • buletine de încercări, verificări, probe; • declaratie de conformitate.	**Condiţii cu caracter tehnic:** - Nu vor fi luate în consideraţie decât ofertele însoţite de documentaţie completă pentru selecţie şi montaj în limba română. - Vor fi anexate: • instrucţiuni de montaj (scheme de conectare, broşuri, cataloage); • instrucţiuni de exploatare; • buletine de încercări, verificări, probe; • declaratie de conformitate.	

Experți pentru sistemele dvs.

Fise tehnice Ex – Cutii din poliester

• Calitate • Fiabilitate • Fiabilitatea livrării
• Cunoștințele noastre pentru aplicația dvs.

Quintex GmbH – i_Park Tauberfranken 13 – 97922 Lauda-Königshofen – Germania
Tel: +49 9343 6130-0 – Fax: +49 9343 6130-105 – Mail: info@quintex.info – www.quintex.eu

Cutii de jonctiune Ex din Poliester

Prezentare generală a ansamblului

Date generale

Tip		Presetupe					Terminale (mm²)					
			M16	M20	M25	M32	MK 3	1,5	2,5	4	6	10
QX-P1	80x75x55	Față A+B	2	1			1 x 5					
		Față C+D	1	0								
QX-P2	110x75x55	Față A+B	3	2			1 x 8					
		Față C+D	1	0								
QX-P3	160x75x55	Față A+B	4	4			1 x 12					
		Față C+D	1	0								
QX-P4	190x75x55	Față A+B	6	4			1 x 12					
		Față C+D	1	0								
QX-P5	122x120x90	Față A+B	6	2	2	1		1 x 16	1 x 14	1 x 12	1 x 9	1 x 6
		Față C+D	2	1	1	1						
QX-P6	220x120x90	Față A+B	12	5	4	3		1 x 41	1 x 34	1 x 29	1 x 21	1 x 16
		Față C+D	2	1	1	1						
QX-P7	160x160x90	Față A+B	8	3	3	2		1 x 23	1 x 20	1 x 17	1 x 12	1 x 9
		Față C+D	6	2	2	1						
QX-P8	260x160x90	Față A+B	14	6	5	4		1 x 48	1 x 40	1 x 34	1 x 25	1 x 19
		Față C+D	6	2	2	1						
QX-P9	360x160x90	Față A+B	22	9	8	6		1 x 73	1 x 60	1 x 51	1 x 37	1 x 29
		Față C+D	6	2	2	1						
QX-P10	200x250x120	Față A+B	15	8	8	3		2 x 36	2 x 32	2 x 26	2 x 18	2 x 14
		Față C+D	12	10	8	3						
QX-P11	255x250x120	Față A+B	21	12	10	4		2 x 47	2 x 39	2 x 33	2 x 24	2 x 18
		Față C+D	12	10	8	3						
QX-P11H	255x250x160	Față A+B	21	12	10	4		2 x 47	2 x 39	2 x 33	2 x 24	2 x 18
		Față C+D	12	10	8	3						
QX-P12	400x250x120	Față A+B	36	20	18	7		2 x 83	2 x 68	2 x 57	2 x 42	2 x 33
		Față C+D	12	10	8	3						
QX-P12H	400x250x160	Față A+B	36	20	18	7		2 x 83	2 x 68	2 x 57	2 x 42	2 x 33
		Față C+D	12	10	8	3						
QX-P13	400x405x120	Față A+B	36	20	18	7		3 x 83	3 x 68	3 x 57	3 x 42	3 x 33
		Față C+D	12	10	8	3						
QX-P13H	400x405x200	Față A+B	72	40	36	21		3 x 83	3 x 68	3 x 57	3 x 42	3 x 33
		Față C+D	55	36	32	18						
QX-P15	600x250x120	Față A+B	57	30	26	10		2x112	2x108	2 x 90	2 x 62	2 x 45
		Față C+D	12	10	8	3						
QX-P15H	600x250x160	Față A+B	57	30	26	10		2x112	2x108	2 x 90	2 x 62	2 x 45
		Față C+D	12	10	8	3						

Combinații și alte dimensiuni după clarificarea tehnică

Datele presetupelor din poliamidă standard					
Tip	**Dimensiunea cheii**	**Interval (mm)**	**Tip**	**Dimensiunea cheii**	**Interval (mm)**
M12	16	3 – 6	**M32**	36	13 – 21
M16	20	4,5 – 9	**M40**	46	17 – 28
M20	24	7 – 13	**M50**	55	23 – 35
M25	29	10 – 17	**M63**	68	31 – 48

QX-P.. specificații generale

Cutii din poliester certificate ex
Date generale

Ex e / Ex i cutii de jonctiune din poliester

Specificatii pentru zona Ex			
Marcaj în conformitate cu 94/9/EG		II 2 GD	
Tipul protecției		II 2G Ex eb IIC und II 2D Ex tb IIIC	
Temperatura ambientă °C Garnitură de silicon MIN	MAX	Clasa de temperatură a gazului T*C	Temperatura prafului °C
-60	+50	T6	80
-60	+55	T5	95
-60	+60	T4	130
Interval max. de temperatură		-60..+100°C	
Grad de protecție		IP 66 - EN60529 QX-P1: IP 56	
Zone Ex		1, 2, 21, 22	
Aplicabil la risc de expunere mecanică (rezistență la impact)		high (7 Joule) QX-P1 for dust: 4 Joule	
Grupe de gaz		IIA; IIB; IIC	
Certificări		ATEX, IECEx, GOST TC-RU, NEMA 4X	

Specificația cutiei	
Material	Poliester armat cu fibră de sticlă dopat cu negru de fum conform UL/V0
Sprafață	Turnare sub presiune, culoare standard negru. Alte culori optionale
Fixare capac	Capac complet detașabil cu șuruburi captive M6 din oțel inoxidabil
Garnitură	One piece of silicone
Împământare	Prin terminale PE. Opțional: șurub de împământare intern/extern alamă M6 Opțional: placă de împământare internă
Bucșă	Găuri filetate direct
Montare	Găuri de 6,5 mm în interiorul corpului incintei

Opțiuni	
Bolt de împământare interioară/ exterioară M6	ES6
Placă de legare la pământ internă Oțel inoxidabil / zincat / alamă	EP (SS/GS/ME)
Balamale pentru capac	HI
Culoare	RAL

QX-P...Configurare terminale

Cutie din poliester

Ex e / Ex i terminal boxes

QX-P7 (160 x 160 x 90 mm)

Querschnitt / *Secțiune* în mm²

Strom [A] Curent [A]	1,5	2,5	4	6	10	16	25	35	50	70	95	120	150	185	240	300
6																
10	48															
16	16	32	125													
20	6	18	36													
25		9	20	39												
35			6	15	38											
50				2	12	31										
63					4	14	52									
80						5	16	58								
100							7	15								
125								6	15							
160									5	13						
200										5	12	37				
225											6	14				
250											3	8	18			
315													5	11		
400														2	7	22
500																4

In diesem Bereich kann unter Beachtung der Hinweise und der festgelegten Einbaumaße im Gehäuse beliebig zusätzlich bestückt werden.

În această zonă puteți adăuga terminale în conformitate cu referințele și dimensiunile *de asamblare definite ale incintei*

Bestückungen in diesem Bereich erfordern einen gesonderten Erwärmungsnachweis.

Aveți nevoie de dovada de încălzire pentru a adăuga terminale în această zonă.

QX-P8 (260 x 160 x 90 mm)

Querschnitt / *Secțiune* în mm²

Strom [A] Curent [A]	1,5	2,5	4	6	10	16	25	35	50	70	95	120	150	185	240	300
6																
10	52															
16	18	34	135													
20	7	20	39													
25		9	22	42												
35			6	16	41											
50				2	13	34										
63					4	16	56									
80						6	17	63								
100							7	16								
125								6	17							
160									5	15						
200										5	13	40				
225										2	7	15				
250											4	9	20			
315												2	5	12		
400														2	8	23
500																4

In diesem Bereich kann unter Beachtung der Hinweise und der festgelegten Einbaumaße im Gehäuse beliebig zusätzlich bestückt werden.

În această zonă puteți adăuga terminale în conformitate cu referințele și dimensiunile de asamblare definite ale incintei

Bestückungen in diesem Bereich erfordern einen gesonderten Erwärmungsnachweis.

Aveți nevoie de dovada de încălzire pentru a adăuga terminale în această zonă.

FISA TEHNICA E-DREx
Doza ramnificatie Ex

Nr Crt.	Specificațiile tehnice impuse prin Caietul de sarcini	Corespondența propunerii tehnice cu specificațiile tehnice impuse prin Caietul de sarcini	Producător
0	1	2	3
1.	Parametrii tehnici si funcționali: - Curent nominal :6A-10A (cont. proiect) - Sir de cleme :Conform proiect - Grad de protecție :IP54 - Temperatura de lucru :-25° C ... +50° C - Material protecție :Metalic - Introducătoare de cablu de explozie :Pentru medii cu pericol de explozie - Tipul de protecție :grupa II zona 2 - Tensiune nominala :230 Vca - Culoare :Gri, negru	Parametrii tehnici si funcționali: - Curent nominal :6A-10A (cont. proiect) - Sir de cleme :Conform proiect - Grad de protecție :IP54 - Temperatura de lucru :-25° C ... +50° C - Material protecție :Metalic - Introducătoare de cablu de explozie :Pentru medii cu pericol de explozie - Tipul de protecție :grupa II zona 2 - Tensiune nominala :230 Vca Culoare :negru	QUINTEX
2.	Specificaţii de performanţă şi condiţii privind siguranta în exploatare: - Se montează mecanic in zone cu pericol de explozie	Specificaţii de performanţă şi condiţii privind siguranta în exploatare: - Se montează mecanic in zone cu pericol de explozie	
3.	Condiţii privind conformitatea cu standarde relevante: - SR EN 60679;SR EN 60529	Condiţii privind conformitatea cu standarde relevante: - SR EN 60679;SR EN 60529	
4.	Condiţii de garanţie şi postgaranţie: - Producătorul va garanta calitatea şi buna funcţionare a produsului timp de 24 luni de la punerea în funcţiune sau de 36 luni de la data livrarii. - Produsul va corespunde normelor tehnice şi standardelor europene.	Condiţii de garanţie şi postgaranţie: - Producătorul va garanta calitatea şi buna funcţionare a produsului timp de 24 luni de la punerea în funcţiune sau de 36 luni de la data livrarii. - Produsul va corespunde normelor tehnice şi standardelor europene.	
5.	Condiţii cu caracter tehnic: - Nu vor fi luate în consideraţie decât ofertele însoţite de documentaţie completă pentru selecţie şi montaj în limba română. - Vor fi anexate: • instrucţiuni de montaj (scheme de conectare, broşuri, cataloage); • instrucţiuni de exploatare; • buletine de încercări, verificări, probe; • declaratie de conformitate.	Condiţii cu caracter tehnic: - Nu vor fi luate în consideraţie decât ofertele însoţite de documentaţie completă pentru selecţie şi montaj în limba română. - Vor fi anexate: • instrucţiuni de montaj (scheme de conectare, broşuri, cataloage); • instrucţiuni de exploatare; • buletine de încercări, verificări, probe; • declaratie de conformitate.	

Experți pentru sistemele dvs.

Fise tehnice Ex – Cutii din poliester

• Calitate • Fiabilitate • Fiabilitatea livrării
• Cunoștințele noastre pentru aplicația dvs.

Quintex GmbH – i_Park Tauberfranken 13 – 97922 Lauda-Königshofen – Germania
Tel: +49 9343 6130-0 – Fax: +49 9343 6130-105 – Mail: info@quintex.info – www.quintex.eu

Cutii de jonctiune Ex din Poliester

Prezentare generală a ansamblului

Date generale

Tip		Presetupe	M16	M20	M25	M32	Terminale (mm²) MK 3	1,5	2,5	4	6	10
QX-P1	80x75x55	Față A+B	2	1			1 x 5					
		Față C+D	1	0								
QX-P2	110x75x55	Față A+B	3	2			1 x 8					
		Față C+D	1	0								
QX-P3	160x75x55	Față A+B	4	4			1 x 12					
		Față C+D	1	0								
QX-P4	190x75x55	Față A+B	6	4			1 x 12					
		Față C+D	1	0								
QX-P5	122x120x90	Față A+B	6	2	2	1		1 x 16	1 x 14	1 x 12	1 x 9	1 x 6
		Față C+D	2	1	1	1						
QX-P6	220x120x90	Față A+B	12	5	4	3		1 x 41	1 x 34	1 x 29	1 x 21	1 x 16
		Față C+D	2	1	1	1						
QX-P7	160x160x90	Față A+B	8	3	3	2		1 x 23	1 x 20	1 x 17	1 x 12	1 x 9
		Față C+D	6	2	2	1						
QX-P8	260x160x90	Față A+B	14	6	5	4		1 x 48	1 x 40	1 x 34	1 x 25	1 x 19
		Față C+D	6	2	2	1						
QX-P9	360x160x90	Față A+B	22	9	8	6		1 x 73	1 x 60	1 x 51	1 x 37	1 x 29
		Față C+D	6	2	2	1						
QX-P10	200x250x120	Față A+B	15	8	8	3		2 x 36	2 x 32	2 x 26	2 x 18	2 x 14
		Față C+D	12	10	8	3						
QX-P11	255x250x120	Față A+B	21	12	10	4		2 x 47	2 x 39	2 x 33	2 x 24	2 x 18
		Față C+D	12	10	8	3						
QX-P11H	255x250x160	Față A+B	21	12	10	4		2 x 47	2 x 39	2 x 33	2 x 24	2 x 18
		Față C+D	12	10	8	3						
QX-P12	400x250x120	Față A+B	36	20	18	7		2 x 83	2 x 68	2 x 57	2 x 42	2 x 33
		Față C+D	12	10	8	3						
QX-P12H	400x250x160	Față A+B	36	20	18	7		2 x 83	2 x 68	2 x 57	2 x 42	2 x 33
		Față C+D	12	10	8	3						
QX-P13	400x405x120	Față A+B	36	20	18	7		3 x 83	3 x 68	3 x 57	3 x 42	3 x 33
		Față C+D	12	10	8	3						
QX-P13H	400x405x200	Față A+B	72	40	36	21		3 x 83	3 x 68	3 x 57	3 x 42	3 x 33
		Față C+D	55	36	32	18						
QX-P15	600x250x120	Față A+B	57	30	26	10		2x112	2x108	2 x 90	2 x 62	2 x 45
		Față C+D	12	10	8	3						
QX-P15H	600x250x160	Față A+B	57	30	26	10		2x112	2x108	2 x 90	2 x 62	2 x 45
		Față C+D	12	10	8	3						

Combinații și alte dimensiuni după clarificarea tehnică

Datele presetupelor din poliamidă standard					
Tip	**Dimensiunea cheii**	**Interval (mm)**	**Tip**	**Dimensiunea cheii**	**Interval (mm)**
M12	16	3 – 6	**M32**	36	13 – 21
M16	20	4,5 – 9	**M40**	46	17 – 28
M20	24	7 – 13	**M50**	55	23 – 35
M25	29	10 – 17	**M63**	68	31 – 48

QX-P.. specificații generale

Cutii din poliester certificate ex
Date generale

Ex e / Ex i cutii de jonctiune din poliester

Specificatii pentru zona Ex			
Marcaj în conformitate cu 94/9/EG		II 2 GD	
Tipul protecției		II 2G Ex eb IIC und II 2D Ex tb IIIC	
Temperatura ambientă °C Garnitură de silicon MIN	MAX	Clasa de temperatură a gazului T*C	Temperatura prafului °C
-60	+50	T6	80
-60	+55	T5	95
-60	+60	T4	130
Interval max. de temperatură		-60..+100°C	
Grad de protecție		IP 66 - EN60529 QX-P1: IP 56	
Zone Ex		1, 2, 21, 22	
Aplicabil la risc de expunere mecanică (rezistență la impact)		high (7 Joule) QX-P1 for dust: 4 Joule	
Grupe de gaz		IIA; IIB; IIC	
Certificări		ATEX, IECEx, GOST TC-RU, NEMA 4X	

Specificația cutiei	
Material	Poliester armat cu fibră de sticlă dopat cu negru de fum conform UL/V0
Sprafață	Turnare sub presiune, culoare standard negru. Alte culori optionale
Fixare capac	Capac complet detașabil cu șuruburi captive M6 din oțel inoxidabil
Garnitură	One piece of silicone
Împământare	Prin terminale PE. Opțional: șurub de împământare intern/extern alamă M6 Opțional: placă de împământare internă
Bucșă	Găuri filetate direct
Montare	Găuri de 6,5 mm în interiorul corpului incintei

Opțiuni	
Bolt de împământare interioară/ exterioară M6	ES6
Placă de legare la pământ internă Oțel inoxidabil / zincat / alamă	EP (SS/GS/ME)
Balamale pentru capac	HI
Culoare	RAL

QX-P7 (160 x 160 x 90 mm)

Querschnitt / *Secțiune* în mm²

Strom [A] Curent [A]	1,5	2,5	4	6	10	16	25	35	50	70	95	120	150	185	240	300
6																
10	48															
16	16	32	125													
20	6	18	36													
25		9	20	39												
35			6	15	38											
50				2	12	31										
63					4	14	52									
80						5	16	58								
100							7	15								
125								6	15							
160									5	13						
200										5	12	37				
225											6	14				
250											3	8	18			
315													5	11		
400														2	7	22
500																4

In diesem Bereich kann unter Beachtung der Hinweise und der festgelegten Einbaumaße im Gehäuse beliebig zusätzlich bestückt werden.

În această zonă puteți adăuga terminale în conformitate cu referințele și dimensiunile *de asamblare definite ale incintei*

Bestückungen in diesem Bereich erfordern einen gesonderten Erwärmungsnachweis.

Aveți nevoie de dovada de încălzire pentru a adăuga terminale în această zonă.

QX-P8 (260 x 160 x 90 mm)

Querschnitt / *Secțiune* în mm²

Strom [A] Curent [A]	1,5	2,5	4	6	10	16	25	35	50	70	95	120	150	185	240	300
6																
10	52															
16	18	34	135													
20	7	20	39													
25		9	22	42												
35			6	16	41											
50				2	13	34										
63					4	16	56									
80						6	17	63								
100							7	16								
125								6	17							
160									5	15						
200										5	13	40				
225										2	7	15				
250											4	9	20			
315												2	5	12		
400														2	8	23
500																4

In diesem Bereich kann unter Beachtung der Hinweise und der festgelegten Einbaumaße im Gehäuse beliebig zusätzlich bestückt werden.

În această zonă puteți adăuga terminale în conformitate cu referințele și dimensiunile de asamblare definite ale incintei

Bestückungen in diesem Bereich erfordern einen gesonderten Erwärmungsnachweis.

Aveți nevoie de dovada de încălzire pentru a adăuga terminale în această zonă.

FISA TEHNICA E-SIC

Sistem de incalzire capsulat pentru conducta impuls

Nr Crt.	Specificațiile tehnice impuse prin Caietul de sarcini	Corespondența propunerii tehnice cu specificațiile tehnice impuse prin Caietul de sarcini	Producător
0	1	2	3
1.	Parametrii tehnici si funcționali: - Curent maxim : 2 A (conf. proiect) - Grad de protecție : minim IP65 - Putere : minim 100W - Temperatura de lucru : -25° C ... +50° C - Material protecție : metalic - introducătoare de cablu : pentru medii cu pericol de explozie pentru cablu cu secțiunea de 1,5-2,5mm2 - Marcare conform ATEX 94/9/EC - Tipul de protecție Ex : pentru zona II cu pericol de explozie - Temp. maxima de suprafața : corespunzătoare clasei T4 - Tensiune nominala 230 Vca - Funcție suplimentara Autoreglare temperatura	Parametrii tehnici si funcționali: - Curent maxim : 2 A (conf. proiect) - Grad de protecție : IP65 - Putere : 100W - Temperatura de lucru : -25° C ... +50° C - Material protecție : metalic - introducătoare de cablu : pentru medii cu pericol de explozie pentru cablu cu secțiunea de 1,5-2,5mm2 - Marcare conform ATEX 94/9/EC - Tipul de protecție Ex : pentru zona II cu pericol de explozie - Temp. maxima de suprafața : corespunzătoare clasei T4 - Tensiune nominala 230Vca Funcție suplimentara Autoreglare temperatura	TOTALGAZ Industrie SRL
2.	Specificaţii de performanţă şi condiţii privind siguranta în exploatare: - Se montează mecanic in zone cu pericol de explozie.	Specificaţii de performanţă şi condiţii privind siguranta în exploatare: - Se montează mecanic in zone cu pericol de explozie.	
3.	Condiţii privind conformitatea cu standarde relevante: - SR EN 60679-1 si SR EN 60079-7; SR EN 60529	Condiţii privind conformitatea cu standarde relevante: - SR EN 60679-1 si SR EN 60079-7; SR EN 60529	
4.	Condiţii de garanţie şi postgaranţie: - Producătorul va garanta calitatea şi buna funcţionare a produsului timp de 24 luni de la punerea în funcţiune sau de 36 luni de la data livrarii. - Produsul va corespunde normelor tehnice şi standardelor europene.	Condiţii de garanţie şi postgaranţie: - Producătorul va garanta calitatea şi buna funcţionare a produsului timp de 24 luni de la punerea în funcţiune sau de 36 luni de la data livrarii. - Produsul va corespunde normelor tehnice şi standardelor europene.	
5.	Condiţii cu caracter tehnic: - Nu vor fi luate în consideraţie decât ofertele însoţite de documentaţie completă pentru selecţie şi montaj în limba română. - Vor fi anexate: • instrucţiuni de montaj (scheme de conectare, broşuri, cataloage); • instrucţiuni de exploatare; • buletine de încercări, verificări, probe; • declaratie de conformitate.	Condiţii cu caracter tehnic: - Nu vor fi luate în consideraţie decât ofertele însoţite de documentaţie completă pentru selecţie şi montaj în limba română. - Vor fi anexate: • instrucţiuni de montaj (scheme de conectare, broşuri, cataloage); • instrucţiuni de exploatare; • buletine de încercări, verificări, probe; declaratie de conformitate.	

Încălzitor cu montaj direct WE 859

Carte tehnică

Domeniu de aplicare

Încălzitoarele cu montaj direct tip WE 859 pot fi utilizate la încălzirea locală a obiectelor şi incintelor închise cu volum mic, și pot asigura următoarele:

- Împiedică formarea condensului;
- Protecție la îngheț;
- Asigură menținerea temperaturii.

Acestea pot fi utilizate în zona 1 şi 2 cu pericol de explozie.

Caracteristici tehnice

În tabelul 1 găsiți caracteristicile tehnice ale elementelor încălzitoare cu montaj direct WE 859.

Tabel 1 - Caracteristici tehnice ale elementelor încălzitoare cu montaj direct WE 859

Putere electrică (W):	100 / 80 / 60	55 / 43
Temperatura max. ≈ la suprafaţa elementului (°C)	80	150
Marcaj specific	CE 1809 Ex d II C T 3 Gb CE 1809 Ex d II C T 4 Gb	
Certificare	INSEMEX-OEC.ATEX.17.03.05X	
Grad de protecție	IP66	
Tensiunea de alimentare (V, AC)	110 ÷ 240	
Mediul de lucru (conf. SR EN 60079-10)	Zona 1 şi 2	
Material corp	aliaj de aluminiu sau inox	
Tip cablu conexiune	SiHF-C-Si	
Diametru exterior cablu conexiune	Ø10	
Lungime cablu conexiune	1 m (standard) Până la 10m (la comanda)	
Material corp	Aluminiu (standard) Otel inox (la cerere)	
Borna legare la pământ	M4	
Temperatura mediului ambiant	-60 ÷ +90˚C	

Descriere și funcţionare

Termistorul PTC este un dispozitiv semiconductor cu o sensibilitate mare la temperatură, realizat dintr-un material ceramic policristalin, pe bază de titanat de bariu. Rezistenţa acestui termistor creşte odată cu creșterea temperaturii. Această proprietate stă la baza caracteristicii de autoreglare specifică elementelor de încălzire de tip PTC.

Căldura este generata de trecerea curentului prin termorezistență (PTC). Datorită creșterii rezistenţei odată cu temperatură, atunci când se atinge temperatura maximă pe

suprafaţa termorezistenței, curentul prin aceasta va tinde spre 0. Astfel nu mai este necesar un dispozitiv pentru reglarea suplimentară a temperaturii sau pentru siguranţă. Elementul de încălzire de tip PTC reglează cu precizie puterea electrică în conformitate cu temperatura pentru care au fost fabricate.

Corpul încălzitorului WE 859 realizează transferul termic direct dinspre termorezistență către elementul pe care este montat.

Alimentarea încălzitorului se face prin intermediul unui contactor montat în afara zonei cu pericol de explozie.

Toate încălzitoarele WE 859 sunt proiectate și executate in jurul unuia sau mai multe elemente încălzitoare de tip PTC (cu auto-limitare). Utilizarea acestor încălzitoare permite realizarea de economii prin reducerea consumului de energie. Încălzitoarele cu montaj direct sunt proiectate pentru a fi instalate pe echipamente si a le încălzi.

În cazul în care încălzitorul este utilizat pentru protecția la îngheț, dacă încălzitorul va fi ales / dimensionat în mod corespunzător, nu va fi nevoie de nici un termostat.

Atenţie:

Contactoarele, tablourile electrice, cutiile de joncțiune și conductoarele dintre cutia de joncțiune și tabloul electric nu fac parte din furnitura care însoțește încălzitorul la livrare.

Montarea în instalaţie

Încălzitorul cu montaj direct WE 859 se utilizează, de regulă, pentru încălzirea elementelor sau a echipamentelor ce lucrează în medii antiex.

Înainte de montare, se face inspecţia vizuală a acestuia şi se verifică cablul de alimentare.

Pentru îmbunătățirea transferului termic producătorul recomanda utilizarea unei paste termo-conductoare între încălzitor și echipamentul pe care se montează.

Încălzitorul cu montaj direct WE 859 se poate monta în orice poziţie. Racordarea la circuitul electric se realizează prin intermediul unei cutii de joncțiune. Gradul de protecție al acestei trebuie să corespundă cerințelor mediului de lucru.

Atenţie:

Racordarea la circuitul electric se va face de către personal autorizat pentru lucrări de montaj în mediu Ex.

Întreţinere

În cazul în care încălzitorul cu montaj direct WE 859 se defectează, acesta se înlocuieşte integral.

Inspecţia şi întreţinerea echipamentului se vor efectuate conform SR EN 60079-17.

Atenţie:

Respectaţi atenţionările specifice de pe elementele componente ale încălzitorului cu montaj direct.

Protejaţi atenţionările, acestea nu trebuie să fie deteriorate, acoperite cu vopsea sau zgâriate.

Dimensiuni de gabarit

În figura de mai jos sunt prezentate dimensiunile de gabarit şi componentele încălzitorului cu montaj direct WE 859.

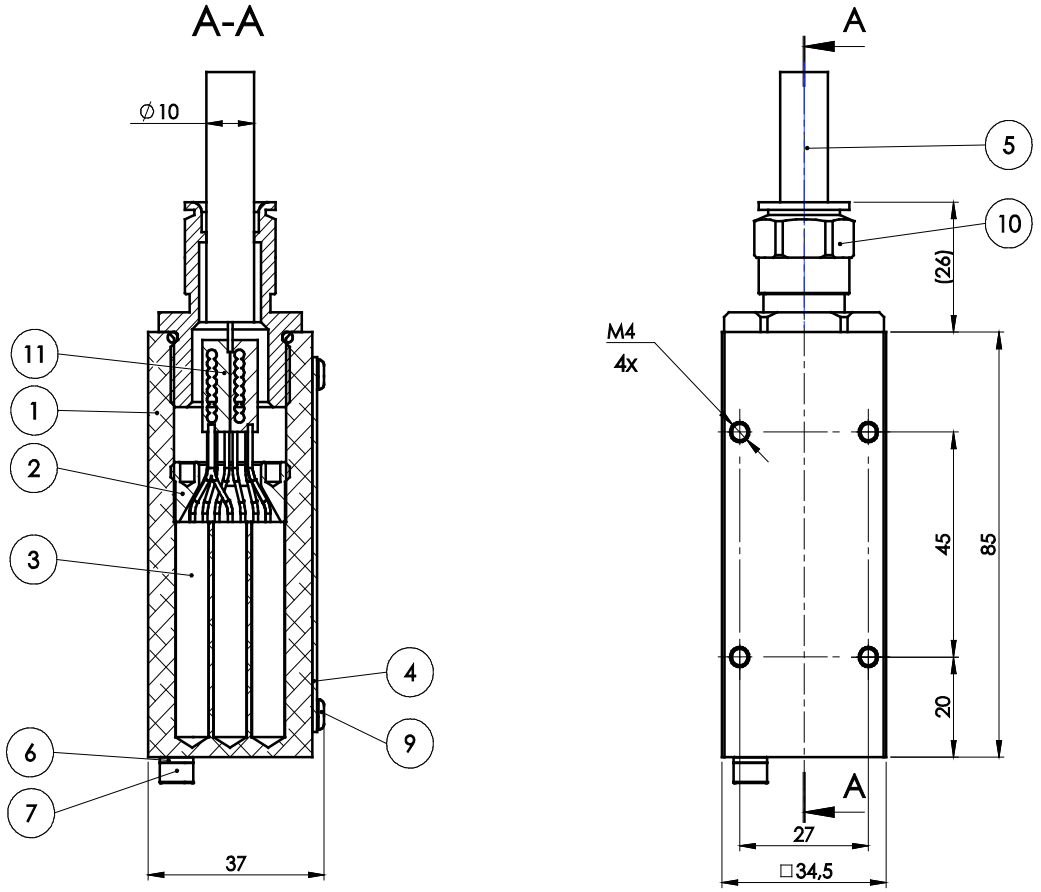

Fig.1 – WE 859 – Dimensiuni de gabarit si componente principale

1. Corp principal	7. Borna legare la pământ (M4)
2. Piuliță fixare	8. Știft filetat
3. Termistor de tip PTC	9. Pop-nit
4. Eticheta	10. Presetupă
5. Cablu alimentare	11. Conector fire conductoare
6. Șaibe	
* Filetele de fixare M4 se executa la comandă	

Producătorul îşi rezervă dreptul de a face modificări fără o notificare prealabilă.

TOTALGAZ INDUSTRIE
Nr. R.C.: J-22-3277/1994
CUI: RO6658553
IBAN:
RO28BRDE240SV13842272400
B.R.D. G.S.G. Iaşi

Şos. Păcurari, nr. 128,
Iaşi, cod 700545, România
Tel. : +40-232-216.391(2)
Fax : +40-232-215.983
E-mail: office@totalgaz.ro
Web: www.totalgaz.ro

Sistem de management certificat
CT Nr. 302-01/03/01.10.2017

FIȘĂ TEHNICĂ E-IEx - Întrerupător Ex

Nr Crt.	Specificațiile tehnice impuse prin Caietul de sarcini	Corespondența propunerii tehnice cu specificațiile tehnice impuse prin Caietul de sarcini	Producător
0	1	2	3
1.	**Parametrii tehnici si funcționali:** - Curent nominal : 6A - 10A (conf. proiect) - Număr poli : 1 P+N - Grad de protectie : IP54 - Temperatură de lucru : -25° C ... +50° C - Material protectie : Metalic - Introducătoare de cablu : Pentru medii cu pericol de explozie - Marcare Ex : Grupa II zona 2 - Temperatura max de supr.: T4 - Tensiune nominala : 230 Vca - Culoare : Gri, negru	**Parametrii tehnici si funcționali:** - Curent nominal : 6A - 10A (conf. proiect) - Număr poli : 1 P+N - Grad de protectie : IP54 - Temperatură de lucru : -40° C ... +60° C - Material protectie : Metalic - Introducătoare de cablu : Pentru medii cu pericol de explozie - Marcare Ex : Grupa II zona 2 - Temperatura max de supr.: T4 - Tensiune nominala : 230 Vca - Culoare : Gri, negru	**AD VIGANO** **Cod: EFSCO216**
2.	**Specificaţii de performanţă şi condiţii privind siguranta în exploatare:** - Se montează mecanic in zone cu pericol de explozie.	**Specificaţii de performanţă şi condiţii privind siguranta în exploatare:** - Se montează mecanic in zone cu pericol de explozie.	
3.	**Condiţii privind conformitatea cu standarde relevante:** - SR EN 60679; SR EN 60529	**Condiţii privind conformitatea cu standarde relevante:** - SR EN 60679; SR EN 60529	
4.	**Condiţii de garanţie şi postgaranţie:** - Producătorul va garanta calitatea şi buna funcţionare a produsului timp de 24 luni de la punerea în funcţiune sau de 36 luni de la data livrarii. - Produsul va corespunde normelor tehnice şi standardelor europene.	**Condiţii de garanţie şi postgaranţie:** - Producătorul va garanta calitatea şi buna funcţionare a produsului timp de 24 luni de la punerea în funcţiune sau de 36 luni de la data livrarii. - Produsul va corespunde normelor tehnice şi standardelor europene.	
5.	**Condiţii cu caracter tehnic:** - Nu vor fi luate în consideraţie decât ofertele însoţite de documentaţie completă pentru selecţie şi montaj în limba română. - Vor fi anexate: • instrucţiuni de montaj (scheme de conectare, broşuri, cataloage); • instrucţiuni de exploatare; • buletine de încercări, verificări, probe; • declaratie de conformitate.	**Condiţii cu caracter tehnic:** - Nu vor fi luate în consideraţie decât ofertele însoţite de documentaţie completă pentru selecţie şi montaj în limba română. - Vor fi anexate: • instrucţiuni de montaj (scheme de conectare, broşuri, cataloage); • instrucţiuni de exploatare; • buletine de încercări, verificări, probe; • declaratie de conformitate.	

PULSANTIERE E SEGNALATORI LUMINOSI SERIE "EFSCO"
PUSH BUTTON STATION AND SIGNAL LIGHTS SERIES "EFSCO"

MMODO DI PROTEZIONE - PROTECTION MODE:
II 2GD Ex d IIC T5 Ex tD A21 IP66 T100°C (Ambient Temperature -40°C/-60°C to +60°C)
II 2GD Ex d IIC T6 Ex tD A21 IP66 T°85C (Ambient Temperature -40°C/-60°C to +40°)

CERTIFICATO - CERTIFICATE : ATEX, IECEx, GOST-R

Caratteristiche generali: contenitore in alluminio con dadi e viti esterne in acciaio inossidabile.
VERNICIATURA: standard epossidica RAL 7037.
SU RICHISTA: disponibile con blocco del movimento.
DATI DI TARGA: Max I= 25 A - 690 V a.c.
ENTRATE CAVO: 2 entrate standard 3/4"GK UNI6125. A richiesta 1"GK, 3/4"NPT-1"NPT o M25-M32

Genera data: *enclosure in light alloy with stainless steel bolts and screws.*
PAINTING: *standard epoxy RAL 7037.*
ON REQUEST: *available with locking movement.*
RATING: *Max I= 25 A - 690 V a.c.*
CABLE ENTRY: *2 entries standard 3/4"GK UNI6125.On request 1"GK, 3/4"NPT -*

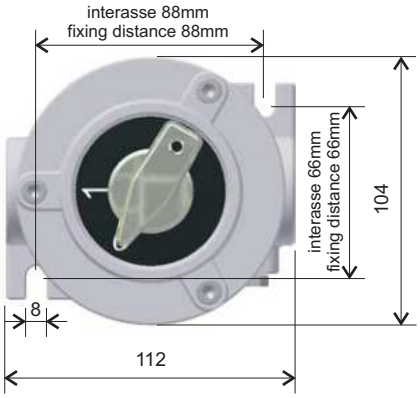

vite di terra esterna M5x10 tipo ISO 4017 A2-70 con dispositivo antirotazione

external earth screw M5x10 type ISO 4017 A2-70 with lock washer and safety plate

Per i manipolatori vedi tabella a pagina 2.48

Elemento / *Component*	Codice / Code		Peso Weight
	16A	25A	
Interruttore bipolare - Bipolar switch 0-1	EFSCO216	EFSCO225	1270
Interruttore tripolare - Three poles switch 0-1	EFSCO316	EFSCO325	1270
Interruttore tetrapolare - Four poles switch 0-1	EFSCO416	EFSCO425	1270
Commutatore bipolare - Bipolar commutator 1-0-2	EFSCO216/C	EFSCO225/C	1270
Commutatore tripolare - Three poles commutator 1-0-2	EFSCO316/C	EFSCO325/C	1270
Commutatore tetrapolare - Four poles commutator 1-0-2	EFSCO416/C	EFSCO425/C	1270
Deviatore bipolare - Bipolar deviation switch 1-2	EFSCO216/D	EFSCO225/D	1270
Deviatore tripolare - Three poles deviation switch 1-2	EFSCO316/D	EFSCO325/D	1270
Deviatore tetrapolare - Four poles deviation switch 1-2	EFSCO416/D	EFSCO425/D	1270
Invertitore bipolare - Bipolar changing switch	EFSCO216/I	EFSCO225/I	1270
Invertitore tripolare - Three poles changing switch	EFSCO316/I	EFSCO325/I	1270
Invertitore tetrapolare - Four poles changing switch	EFSCO416/I	EFSCO425/I	1270

MANIPOLATORI SERIE "EFSCO" E "EFDCS”
CONTROL SWITCHES SERIES "EFSCO" AND "EFDCS”

CODICE *CODE*	DENOMINAZIONE *DENOMINATION*	DIAGRAMMA *DIAGRAM*	CONTRASSEGNO *TAG*
R	DIAGRAMMA “R” MANIPOLATORE *CONTROL SWITCH* *DIAGRAM “R”*	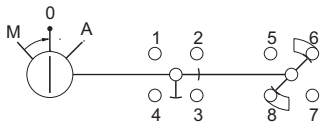	A = stop-*stop* B = chiuso-*lockout* 0 = neutro-*neutral* M = inizio-*start*
X	DIAGRAMMA “X” MANIPOLATORE *CONTROL SWITCH* *DIAGRAM “X”*	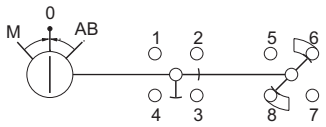	A = stop-*stop* B = chiuso-*lockout* 0 = neutro-*neutral* M = inizio-*start*
Y	DIAGRAMMA “Y” MANIPOLATORE *CONTROL SWITCH* *DIAGRAM “Y”*	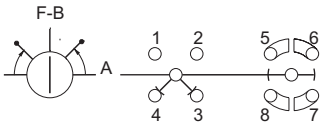	F = stop-*stop* B = chiuso-*lockout* ● = neutro-*neutral* A = avanti-*forward* I = indietro-*reverse*
W	DIAGRAMMA “W” MANIPOLATORE *CONTROL SWITCH* *DIAGRAM “W”*	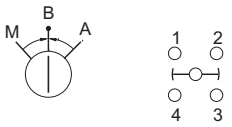	A = stop-*stop* B = chiuso-*lockout* ● = neutro-*neutral* M = inizio-*start*
Z	DIAGRAMMA “Z” MANIPOLATORE *CONTROL SWITCH* *DIAGRAM “Z”*	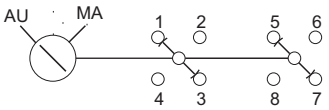	AU=automatico *automatic* MAN=manuale *manual*

ESEMPIO PER ORDINARE:
Manipolatore IIB corpo doppio con luce pilota rossa e un interruttore di comando diagramma X codice EFDCS2/LR-X
Disposizione dei componenti da sinistra a destra.

Manipolatore IIC con comando schema R codice EFSCO/R

EXAMPLE FOR ORDER:
Control switch IIB with 1 red pilot-light and 1 control switch diagram X code EFDCS2/LR-X
Components disposition from left to right.

Control switch IIC with control switch diagram R code EFSCO/R

FISA TEHNICA E-IEC
Insotitori electrici

Nr Crt.	Specificațiile tehnice impuse prin Caietul de sarcini	Corespondența propunerii tehnice cu specificațiile tehnice impuse prin Caietul de sarcini	Producător
0	1	2	3
1.	Parametrii tehnici si funcționali: - Cabluri de încălzire autoreglabile cu U=200-277Vca; - Clasificarea zonei : Periculoasa, Zona 1, Zona 2 (gaz); - Temperatura maxima de menținere sau expunere continua (alimentare pornita): 121°C; - Temperatura maxima de expunere intermitenta (alimentare pornita):250 °C (*) Expunerea maxima cumulata 1000 de ore; - Tip de suprafață Însoțită electric: Otel carbon Otel inoxidabil Metal vopsit sau nevopsit - Temperatura minima de instalare: -60 °C; - Raza minima de Îndoire: la 20 °C: 13 mm; la -60 °C: 51 mm; - Putere de ieșire nominal a la 230 Vca in cazul conductelor din otel la 10 °C): minim 30 ; - Dimensiunile produsului (nominale) si greutatea: • Grosime (mm) 7,2; • Lățime (mm) 11,7; • Greutate (g/m) 170; - Temperatura de pornire: -20° C ... +10° C; - Materiale principale: conductori de cupru nichelați de 2,3 mm2), fibre conductoare cu autoreglare, izolație din fluoropolimer pentru temperaturi ridicate.	Parametrii tehnici si funcționali: - Cabluri de încălzire autoreglabile cu U=200-277Vca; - Clasificarea zonei : Periculoasa, Zona 1, Zona 2 (gaz); - Temperatura maxima de menținere sau expunere continua (alimentare pornita): 121°C; - Temperatura maxima de expunere intermitenta (alimentare pornita): 250°C (*) Expunerea maxima cumulata 1000 de ore; - Tip de suprafață Însoțită electric: Otel carbon Otel inoxidabil Metal vopsit sau nevopsit - Temperatura minima de instalare: -60 °C; - Raza minima de Îndoire: la 20 °C: 13 mm; la -60 °C: 51 mm; - Putere de ieșire nominal a la 230 Vca in cazul conductelor din otel la 10 °C): minim 30 ; - Dimensiunile produsului (nominale) si greutatea: • Grosime (mm) 7,2; • Lățime (mm) 11,7; • Greutate (g/m) 170; - Temperatura de pornire: -20° C ... +10° C; - Materiale principale: conductori de cupru nichelați de 2,3 mm2), fibre conductoare cu autoreglare, izolație din fluoropolimer pentru temperaturi ridicate.	Raychem
2.	Specificaţii de performanţă şi condiţii privind siguranta în exploatare: - Posibilitate de suprapuneri multiple fără riscul de supraîncălzire; - Temperaturi uniforme ale conductei rezultate din compensarea pierderii locale de căldură si variațiilor de tensiune datorita efectului de autoreglare	Specificaţii de performanţă şi condiţii privind siguranta în exploatare: - Posibilitate de suprapuneri multiple fără riscul de supraîncălzire; - Temperaturi uniforme ale conductei rezultate din compensarea pierderii locale de căldură si variațiilor de tensiune datorita efectului de autoreglare	

	Timp de instalare redus si seturilor de conectare dedicate; - Cablul pentru Încălzire de tip paralel cu autoreglare, utilizat in special pentru protecția la îngheț si menținerea temperaturii de proces a conductelor si recipientelor. - Cablurile pentru Încălzire asigura menținerea unor temperaturi de pana la 120°C cu expuneri intermitente pe termen scurt de pana 215°C	Timp de instalare redus si seturilor de conectare dedicate; - Cablul pentru Încălzire de tip paralel cu autoreglare, utilizat in special pentru protecția la îngheț si menținerea temperaturii de proces a conductelor si recipientelor. - Cablurile pentru Încălzire asigura menținerea unor temperaturi de pana la 120°C cu expuneri intermitente pe termen scurt de pana 215°C	
3.	Condiţii privind conformitatea cu standarde relevante: - SR EN 60079;SR EN 60529	Condiţii privind conformitatea cu standarde relevante: - SR EN 60079;SR EN 60529	
4.	Condiţii de garanţie şi postgaranţie: - Producătorul va garanta calitatea şi buna funcţionare a produsului timp de 24 luni de la punerea în funcţiune sau de 36 luni de la data livrarii. - Produsul va corespunde normelor tehnice şi standardelor europene.	Condiţii de garanţie şi postgaranţie: - Producătorul va garanta calitatea şi buna funcţionare a produsului timp de 24 luni de la punerea în funcţiune sau de 36 luni de la data livrarii. - Produsul va corespunde normelor tehnice şi standardelor europene.	
5.	Condiţii cu caracter tehnic: - Nu vor fi luate în consideraţie decât ofertele însoţite de documentaţie completă pentru selecţie şi montaj în limba română. - Vor fi anexate: • instrucţiuni de montaj (scheme de conectare, broşuri, cataloage); • instrucţiuni de exploatare; • buletine de încercări, verificări, probe; • declaratie de conformitate.	Condiţii cu caracter tehnic: - Nu vor fi luate în consideraţie decât ofertele însoţite de documentaţie completă pentru selecţie şi montaj în limba română. - Vor fi anexate: • instrucţiuni de montaj (scheme de conectare, broşuri, cataloage); • instrucţiuni de exploatare; • buletine de încercări, verificări, probe; • declaratie de conformitate.	

Raychem XTV
CABLU DE ÎNCĂLZIRE CU AUTOREGLARE

CONSTRUCȚIA CABLULUI DE ÎNCĂLZIRE

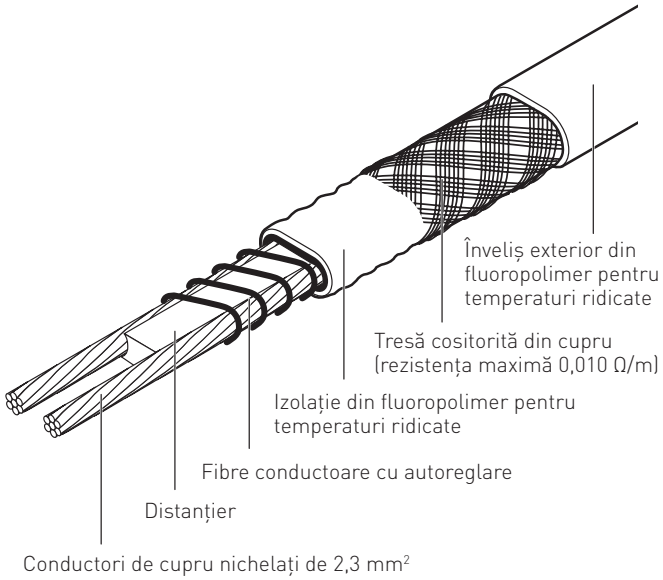

Însoțitori electrici pentru aplicații de menținere a temperaturii de proces până la 121 °C, care pot fi supuși la curățare cu jet de abur.

Familia XTV de cabluri de încălzire în circuit paralel și autoreglare se utilizează pentru menținerea temperaturii conductelor și recipientelor.

Se poate utiliza de asemenea pentru protecția la îngheț a conductelor mari și pentru aplicații ce solicită capacitatea cablului de a face față temperaturilor de expunere mari.

APLICABILITATE

Clasificarea zonei	Periculoasă, Zona 1, Zona 2 (gaz), Zona 21, Zona 22 (praf) Normală
Tip de suprafață însoțită electric	Oțel carbon Oțel inoxidabil Metal vopsit sau nevopsit
Rezistența chimică	Substanțe organice și corozive Pentru substanțe organice și corozive agresive contactați reprezentanța dvs. locală Pentair Thermal Management

TENSIUNEA DE ALIMENTARE

	230 Vca (contactați reprezentanța dvs. locală Pentair Thermal Management pentru date referitoare la alte tensiuni)

APROBĂRI

	Cablurile de încălzire XTV sunt aprobate pentru utilizare în zone periculoase de PTB și Baseefa Ltd. PTB 09 ATEX 1118 X și Baseefa06ATEX0184X Ex II 2G Ex e II T* și Ex II 2D Ex tD A21 IP66 T* IECEx PTB 09.0059X și IECEx BAS 06.0044X Ex e II T* și Ex tD A21 IP66 T* *Vedeți lista aprobărilor
	Cablurile de încălzire XTV sunt atestate de către DNV pentru a fi utilizate pe vapoare și platforme marine. Certificat DNV nr. E-11565. Produsele au de asemenea aprobările necesare pentru utilizarea în Kazahstan, Rusia și multe alte țări. Contactați reprezentanța dvs. locală Pentair Thermal Management pentru detalii suplimentare.

SPECIFICAȚII

Temperatura maximă de menținere sau expunere continuă (alimentare pornită)	121 °C
Temperatura maximă de expunere intermitentă (alimentare pornită)	250 °C (*) Expunerea maximă cumulată 1000 de ore (*) Valoarea nominală de 250C se aplică tuturor produselor imprimate cu marcajul "EXPUNERE INTERMITENTĂ MAXIMĂ 250C"."
Clasificarea temperaturii	T2: 20XTV2-CT-T2 T3: 4XTV2-CT-T3, 8XTV2-CT-T3, 12XTV2-CT-T3, 15XTV2-CT-T3
În funcție de abordarea sistemului*	T3-T6 *Cablurile de încălzire Raychem XTV sunt aprobate pentru clasificările de temperatură enumerate prin utilizarea principiilor proiectării stabilizate (similar abordării clasificării sistemului) sau prin utilizarea unui dispozitiv de limitare a temperaturii. Utilizați aplicația software de design TraceCalc sau contactați Pentair Thermal Management.
Temperatura minimă de instalare	–60 °C
Raza minimă de îndoire	la 20 °C: 13 mm la –60 °C: 51 mm

CAPACITATE TERMICĂ NOMINALĂ

Putere de ieșire nominală la 230 Vca în cazul conductelor din oțel izolate

A 20XTV2-CT-T2
B 15XTV2-CT-T3
C 12XTV2-CT-T3
D 8XTV2-CT-T3
E 4XTV2-CT-T3

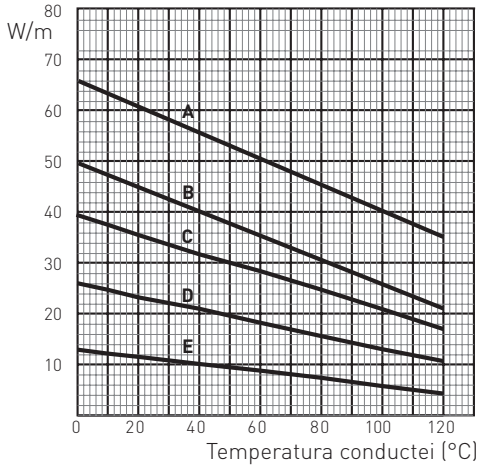

	4XTV2-CT-T3	8XTV2-CT-T3	12XTV2-CT-T3	15XTV2-CT-T3	20XTV2-CT-T2
Putere de ieșire nominală (W/m la 10 °C)	12	25	38	47	63

DIMENSIUNILE PRODUSULUI (NOMINALE) ȘI GREUTATEA

Grosime (mm)	7,2	7,2	7,2	7,2	7,2
Lățime (mm)	11,7	11,7	11,7	11,7	11,7
Greutate (g/m)	170	170	170	170	170

LUNGIMEA MAXIMĂ A CIRCUITULUI PE BAZA ÎNTRERUPĂTOARELOR DE TIPUL „C" ÎN CONFORMITATE CU EN 60898

Dimensionarea protecției electrice	Temperatura de pornire	Lungimea maximă a cablului de încălzire per circuit (m)				
16 A	–20°C	145	90	65	55	40
	+10°C	170	105	75	60	45
25 A	–20°C	225	145	105	85	65
	+10°C	245	165	120	95	70
32 A	–20°C	245	175	135	105	80
	+10°C	245	175	140	125	90
40 A	–20°C	245	175	140	135	110
	+10°C	245	175	140	135	110

Cifrele de mai sus sunt numai pentru estimarea lungimii circuitului. Pentru informații mai detaliate, vă rugăm utilizați aplicația software Pentair Thermal Management TraceCalc sau contactați reprezentanța dvs. locală Pentair Thermal Management. Pentair Thermal Management solicită utilizarea unui dispozitiv pentru curent rezidual de 30 mA, pentru siguranță maximă și protecție la incendiu. Acolo unde designul are ca rezultat un curent de scurgere mai ridicat, nivelul de declanșare preferat pentru dispozitivele reglabile este de 30 mA peste orice caracteristică de scurgere capacitivă inerentă a încălzitorului, așa cum este specificat de furnizorul însoțitorilor electrici, sau alternativ, următorul nivel de declanșare obișnuit disponibil pentru dispozitive nereglabile, cu un maxim de 300 mA. Toate aspectele legate de siguranță trebuie verificate.

DETALII PRIVIND EFECTUAREA COMENZII

Descrierea piesei	4XTV2-CT-T3	8XTV2-CT-T3	12XTV2-CT-T3	15XTV2-CT-T3	20XTV2-CT-T2
Nr. piesă	P000001667	P000001670	P000001673	P000001675	P000001677

COMPONENTE

Pentair Thermal Management oferă o gamă completă de componente pentru conexiuni de alimentare, racorduri și etanșări ale capetelor.
Aceste componente trebuie utilizate pentru a asigura funcționarea corespunzătoare a produsului și conformitatea cu cerințele electrice.

WWW.PENTAIRTHERMAL.RO

ROMANIA
Tel. +40 34 480 21 44
Fax +40 34 480 21 41
salesro@pentair.com

FISA TEHNICA E-CI-Ex

Corp de iluminat pentru medii cu potenţial exploziv

Nr Crt.	Specificațiile tehnice impuse prin Caietul de sarcini	Corespondența propunerii tehnice cu specificațiile tehnice impuse prin Caietul de sarcini	Producător
0	1	2	3
1.	**Parametrii tehnici si funcţionali:** - Iluminat în medii cu pericol de explozie din grupa II, zona 2 - Putere totală: minim 40 W; - Tensiune: 240Vac, 50/60Hz; - Clasa de izolaţie electrică: I; - Grad de protectie minim IP55; - Introducător de cablu cu etanşare prin garnitură de cauciuc pentru diametru ϕ11-ϕ14 mm; - Sectiunea maximă a conductorului: 2,5mm2; număr de borne: 3 (N, L,PE); - Temperatura de funcţionare nominală de la -25° C ... +50° C; - Marcaj Ex grupa II**,** zonă 2; - Temperatura maxima de suprafata T4	**Parametrii tehnici si funcţionali:** - Iluminat în medii cu pericol de explozie din grupa II, zona 2 - Putere totală: minim 40 W; - Tensiune: 240Vac, 50/60Hz; - Clasa de izolaţie electrică: I; - Grad de protectie minim IP55; - Introducător de cablu cu etanşare prin garnitură de cauciuc pentru diametru ϕ11-ϕ14 mm; - Sectiunea maximă a conductorului: 2,5mm2; număr de borne: 3 (N, L,PE); - Temperatura de funcţionare nominală de la -25° C ... +50° C; - Marcaj Ex grupa II**,** zonă 2; - Temperatura maxima de suprafata T4 -	TORMIN
2.	**Specificaţii de performanţă şi condiţii privind siguranta în exploatare:** - Montaj semistationar, conectare individuală	**Specificaţii de performanţă şi condiţii privind siguranta în exploatare:** - Montaj semistationar, conectare individuală	
3.	**Condiţii privind conformitatea cu standarde relevante:** - SR EN 60079, SR EN 60529	**Condiţii privind conformitatea cu standarde relevante:** - SR EN 60079, SR EN 60529	
4.	**Condiţii de garanţie şi postgaranţie:** - Producătorul va garanta calitatea şi buna funcţionare a produsului timp de 24 luni de la punerea în funcţiune sau de 36 luni de la data livrarii. - Produsul va corespunde normelor tehnice şi standardelor europene.	**Condiţii de garanţie şi postgaranţie:** - Producătorul va garanta calitatea şi buna funcţionare a produsului timp de 24 luni de la punerea în funcţiune sau de 36 luni de la data livrarii. - Produsul va corespunde normelor tehnice şi standardelor europene.	
5.	**Condiţii cu caracter tehnic:** - Nu vor fi luate în consideraţie decât ofertele însoţite de documentaţie completă pentru selecţie şi montaj în limba română. - Vor fi anexate: • instrucţiuni de montaj (scheme de conectare, broşuri, cataloage); • instrucţiuni de exploatare; • buletine de încercări, verificări, probe; • declaratie de conformitate.	**Condiţii cu caracter tehnic:** - Nu vor fi luate în consideraţie decât ofertele însoţite de documentaţie completă pentru selecţie şi montaj în limba română. - Vor fi anexate: • instrucţiuni de montaj (scheme de conectare, broşuri, cataloage); • instrucţiuni de exploatare; • buletine de încercări, verificări, probe; • declaratie de conformitate.	

BC9302S Series
LED Explosion Proof FloodLight

IECEx
ATEX
IP 66
Ta 40/55
Ta -40

Beam angle:80°

Ex marking: Ex db op is IIC T5/T6 Gb
Ex tb op is IIIC T95℃/T80℃ Db

Characteristics

- Large light surface flexible light output, no glare, no blue light hazard, especially suitable for long-term lighting in a working environment.
- The translucent cover is made of non-transparent tempered glass, which is extremely resistant to weathering and acid and alkali.
- The shell is made of aluminum alloy, the standard part is made of 304 stainless steel, and the surface is made of high-tech anti-corrosion treatment technology, which is suitable for various harsh industrial environments.
- The luminaire has two access ports, which can be used in parallel as a connection, saving the cost of installing the junction box in the middle.
- The lamp opening and closing connection design enable single person installation and maintenance, saving labor costs.
- American Lumileds light source, the overall lighting efficiency is as high as 100lm / W, compared with the metal halide lamp energy saving more than 60%.
- The whole lamp protection grade is IP66, which can be applied to various indoor and outdoor sand dust or rain fog and sea wave environment for a long time.

Application

Equipment platform, equipment layer area, main and auxiliary workshop, channel, pipeline, joint station, transfer station, pump valve shed, tank, material sample, plank road, warehouse room, warehouse and other places.
Hazardous Gas Zone 1 and Zone 2
Dangerous dust Zone 21 and Zone 22

Main Specification

Rated voltage (V)	100~240VAC/120~270VAC
	20-38VAC/ 20~48VDC
Rated frequency	50Hz / 60Hz
Light source	LED
Life time(h)	50,000h
CCT	5000K(3000K/4000K optional)
Screw thread	G3/4, M20, M25, NPT3/4", NPT1/2
Leading-in cable diameter	ϕ9mm ~ ϕ1 4 mm
Dimension (mm)	ϕ240×132
Net weight (kg)	5

Ordering reference

Ordering reference	Picture	Rated wattage (W)	Light output (lm)	Space height ratio	Mounting height(m)	Light distribution curve (1000cd/lm)	Replace to Metal halide lamp
BC9302S-L30-80°		30W	>3600	1.25	2~5m	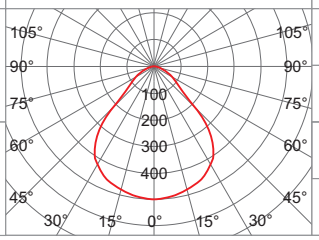	70W
BC9302S-L40-80°		40W	5100				100W
BC9302S-L50-80°		50W	>6500		4~6m		100W
BC9302S-L60-80°		60W	>7200				150W

*The lamp can be matched with a milk white sphere lens: 200°

Drawing of dimension (Dimensions in mm)

Seat mounting

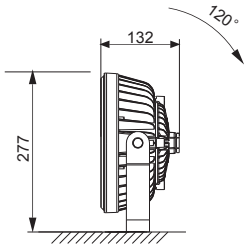

Side Wall mounting

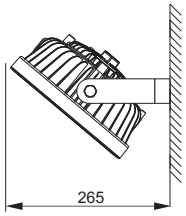

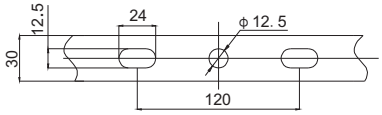

Installation size

BC9302S Series
LED Explosion Proof FloodLight

IECEx
ATEX
IP 66
Ta 40/55
Ta -40

Beam angle:200°

Ex marking: Ex db op is IIC T5/T6 Gb
Ex tb op is IIIC T95℃/T80℃ Db

Characteristics

- Large light surface flexible light output, no glare, no blue light hazard, especially suitable for long-term lighting in a working environment.
- The translucent cover is made of non-transparent tempered glass, which is extremely resistant to weathering and acid and alkali.
- The shell is made of aluminum alloy, the standard part is made of 304 stainless steel, and the surface is made of high-tech anti-corrosion treatment technology, which is suitable for various harsh industrial environments.
- The luminaire has two access ports, which can be used in parallel as a connection, saving the cost of installing the junction box in the middle.
- The lamp opening and closing connection design enable single person installation and maintenance, saving labor costs.
- American Lumileds light source, the overall lighting efficiency is as high as 100lm / W, compared with the metal halide lamp energy saving more than 60%.
- The whole lamp protection grade is IP66, which can be applied to various indoor and outdoor sand dust or rain fog and sea wave environment for a long time.

Application

Equipment platform, equipment layer area, main and auxiliary workshop, channel, pipeline, joint station, transfer station, pump valve shed, tank, material sample, plank road, warehouse room, warehouse and other places.
Hazardous Gas Zone 1 and Zone 2
Dangerous dust Zone 21 and Zone 22

Main Specification

Rated voltage (V)	100~240VAC/120~270VAC(30~60W)
	200~240VAC(80W)
	20~38VAC/20~48VDC(30~60W)
Rated frequency	50Hz / 60Hz
Light source	LED
Life time(h)	50,000h
CCT	5000K(3000K/4000K optional)
Screw thread	G3/4, M20, M25, NPT3/4", NPT1/2
Leading-in cable diameter	ϕ 9mm~ ϕ 14mm
Dimension (mm)	ϕ 240×220
Net weight (kg)	5

Ordering reference

Ordering reference	Picture	Rated wattage (W)	Light output (lm)	Space height ratio	Mounting height(m)	Light distribution curve (1000cd/lm)	Replace to Metal halide lamp
BC9302S-L30-200°		30W	3300	1.75	2~5m	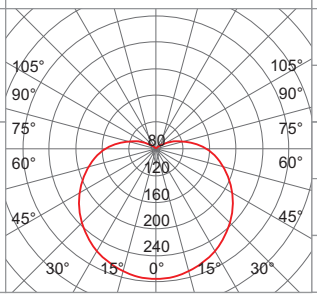	70W
BC9302S-L40-200°		40W	4200				100W
BC9302S-L50-200°		50W	5000		3~6m		**100W**
BC9302S-L60-200°		60W	6000				150W
BC9302S-L80-200°		80W	8000				175W

*The lamp can be matched with a flat lens: 80°

Drawing of dimension (Dimensions in mm)

Seat mounting

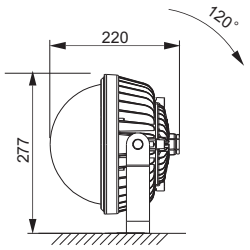

Side Wall mounting

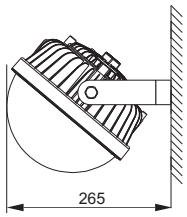

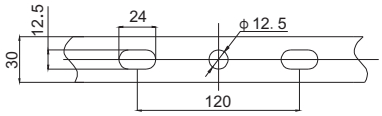

Installation size

FIȘĂ TEHNICĂ E-THT-Ex - Termostat Ex

Nr Crt.	Specificațiile tehnice impuse prin Caietul de sarcini	Corespondența propunerii tehnice cu specificațiile tehnice impuse prin Caietul de sarcini	Producător
0	1	2	3
1.	**Parametrii tehnici si funcționali:** - Tip termostat: mecanic; - Tensiunea de lucru: 230 Vac; - Curentul minim comutat: 16A sarcina rezistiva; - Tip senzor: capilar; - Domeniu temperatura reglata: 0° C ... +49° C; - Loc de montaj: zona 1 sau zona 2; - Tip material: poliester sau aluminiu; - Tip protecție: 2G Ex de IIC T6, T5; - Grad IP: minim IP65; - Temperatura de funcționare: -40° C ... +50° C;	**Parametrii tehnici si funcționali:** - Tip termostat: mecanic; - Tensiunea de lucru: 230 Vac; - Curentul maxim comutat: 25A sarcina rezistiva; - Tip senzor: capilar; - Domeniu temperatura reglata: 0° C ... +200° C; - Loc de montaj: zona 1 sau zona 2; - Tip material: poliester; - Tip protecție: II 2G Ex db eb IIB T6 Gb - Grad IP: IP66; - Temperatura de funcționare: -40° C ... +55° C;	**QUINTEX**
2.	**Specificaţii de performanţă şi condiţii privind siguranta în exploatare:** - Protecția terminalelor la atingere cu mana. - Presetupe Ex pentru cabluri armate; - Funcție de Fail-Safe in caz de rupere tub capilar.	**Specificaţii de performanţă şi condiţii privind siguranta în exploatare:** - Protecția terminalelor la atingere cu mana. - Presetupe Ex pentru cabluri armate; - Funcție de Fail-Safe in caz de rupere tub capilar.	
3.	**Condiţii privind conformitatea cu standarde relevante:** - EN 60592; - EN 60079-0; - EN 60079-1; - EN 60079-7; - EN 60079-30-1	**Condiţii privind conformitatea cu standarde relevante:** - EN 60592; - EN 60079-0; - EN 60079-1; - EN 60079-7; - EN 60079-30-1.	
4.	**Condiţii de garanţie şi postgaranţie:** - Producătorul va garanta calitatea şi buna funcţionare a produsului timp de 24 luni de la punerea în funcţiune sau de 36 luni de la data livrarii. - Produsul va corespunde normelor tehnice şi standardelor europene.	**Condiţii de garanţie şi postgaranţie:** - Producătorul va garanta calitatea şi buna funcţionare a produsului timp de 24 luni de la punerea în funcţiune sau de 36 luni de la data livrarii. - Produsul va corespunde normelor tehnice şi standardelor europene.	
5.	**Condiţii cu caracter tehnic:** - Nu vor fi luate în consideraţie decât ofertele însoţite de documentaţie completă pentru selecţie şi montaj în limba română. - Vor fi anexate: ▪ instrucţiuni de montaj (scheme de conectare, broşuri, cataloage); ▪ instrucţiuni de exploatare; ▪ buletine de încercări, verificări, probe; ▪ declaratie de conformitate.	**Condiţii cu caracter tehnic:** - Nu vor fi luate în consideraţie decât ofertele însoţite de documentaţie completă pentru selecţie şi montaj în limba română. - Vor fi anexate: ▪ instrucţiuni de montaj (scheme de conectare, broşuri, cataloage); ▪ instrucţiuni de exploatare; ▪ buletine de încercări, verificări, probe; declaratie de conformitate.	

IRM…Exd

Ex d mechanical temperature controller for use in hazardous area.

Mechanical Controller Ex d

- Robust design, IP66
- 25A/250V switching capacity
- 2.5mm² spring clamp terminals
- 5.8mm diameter stainless steel bulb
- 1.5m long capillary tube

Description

The IRM Ex d-Series temperature controllers are mechanical 2-point capillary tube line-sensing thermostats.

The epoxy painted die-cast aluminium enclosure is very robust for harsh environments and can be used for direct connection of heating circuits with approved cable glands.

This temperature controller can be used for direct switching by the n/c contact up to 25A. The temperature set point is fully adjustable; the n/c contact opening on temperature rise.

Standard colour is cream-white RAL 9010 but other colour finishes are available upon request.

Technical Data

Min. Ambient Temperature: (-55°C upon request)	-40°C
Switching Capacity: (16A/ 400V AC upon request)	25A/250V AC
Temperature Class:	T6 at +55°C
Protection Class:	IP66

Marking

II 2G Ex db eb IIB T6 Gb
II 2D Ex tb eb IIIB T120°C Db IP66

Approval

ATEX, EAC

Further Information

Please consult the installation instructions!

Ordering Information

Part number:

IRM040Exd:	Temperature range: 0…+40°C
IRM0200Exd:	Temperature range: 0…+200°C
IRM50320Exd:	Temperature range: +50…+320°C

Further temperature ranges available upon request.

Standard Versions

Technical Data

IRM…Exd	040	0200	50320
Voltage Rating (V AC)	250	250	250
Switching cap.: (cos φ = 1) (A)	25	25	25
Switching Difference (K)	Ca.3	Ca.5	Ca.7
Max. Sensor Temperature (°C)	45	230	350
Protection Class	IP66	IP66	IP66
Capillary Tube Length (in mm)	1500	1500	1500
Sensor Bulb Dimensions (in mm)	126 x 5.8ø	179 x 3.0ø	179 x 3.0ø
Enclosure Dimensions overall (LxWxH in mm) (110mm ø)	145x126x107	145x126x107	145x126x107
Fixing crs (in mm)	7.0ø x 126	7.0ø x 126	7.0ø x 126
Cable Glands M20	2	2	2
Cable Gland Seal ø (in mm)	6-12	6-12	6-12
Spring Clamp Terminal (in mm²)	2.5	2.5	2.5
Approximate Weight (in kg)	1.3	1.3	1.3

Typical Wiring Diagram

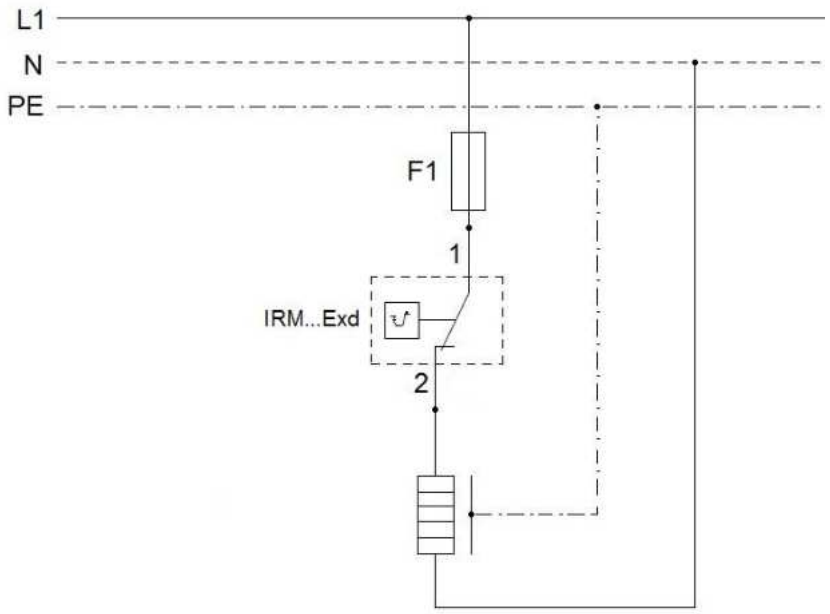

FISA TEHNICA E-TP
Traductor de presiune cu display 4-20mA

Nr Crt.	Specificațiile tehnice impuse prin Caietul de sarcini	Corespondența propunerii tehnice cu specificațiile tehnice impuse prin Caietul de sarcini	Producător
0	1	2	3
1.	Parametrii tehnici si funcționali: - Alimentat din bucla de curent: max. Ui= 30V (tipic 24 Vcc), li=max 150mA - Domeniu: 0 - 100 bar intrare SRM; - Domeniu: 0 - 10 bar ieșire SRM; - Acuratețe: max. ± 0,5% din valoarea măsurată; - Semnal de ieșire: analog 4-20 mA, comunicație HART; - Timp de răspuns: max 250 ms - Grad de protecție: minim IP65 - Indicator LCD, 5 digiți; - Temperatura de lucru : -25° C ... +50° C;	Parametrii tehnici si funcționali: - Alimentat din bucla de curent: max. Ui= 30V (tipic 24 Vcc), li=max 150mA - Domeniu: 0 - 100 bar intrare SRM; - Domeniu: 0 - 10 bar ieșire SRM; - Acuratețe: max. ± 0,5% din valoarea măsurată; - Semnal de ieșire: analog 4-20 mA, comunicație HART; - Timp de răspuns: max 250 ms - Grad de protecție: minim IP65 - Indicator LCD, 5 digiți; Temperatura de lucru : -25° C ... +50° C;	Rosemount
2.	Specificaţii de performanţă şi condiţii privind siguranta în exploatare: - Construcție robusta conform normelor de siguranță; - Stabilitate caracteristici metrologice +/- 0,2% minim 3 ani; - Certificat de calibrare in 5 puncte - Certificare pentru mediu cu pericol de explozie: grupa II zona II - Temperatura maxima de suprafața corespunzătoare clasei T4 pentru Ex; - Daca va fi livrat in protecție intrinseca atunci se va livra si bariera de potențial	Specificaţii de performanţă şi condiţii privind siguranta în exploatare: - Construcție robusta conform normelor de siguranță; - Stabilitate caracteristici metrologice +/- 0,2% minim 3 ani; - Certificat de calibrare in 5 puncte - Certificare pentru mediu cu pericol de explozie: grupa II zona II - Temperatura maxima de suprafața corespunzătoare clasei T4 pentru Ex; Daca va fi livrat in protecție intrinseca atunci se va livra si bariera de potențial	
3.	Condiţii privind conformitatea cu standarde relevante: - Seria de standarde SR EN 60079 funcție de tipul de protecție Ex ales. - SR EN 60529 grade de protecție	Condiţii privind conformitatea cu standarde relevante: - Seria de standarde SR EN 60079 funcție de tipul de protecție Ex ales. SR EN 60529 grade de protecție	
4.	Condiţii de garanţie şi postgaranţie: - Producătorul va garanta calitatea şi buna funcţionare a produsului timp de 24 luni de la punerea în funcţiune sau de 36 luni de la data livrarii.	Condiţii de garanţie şi postgaranţie: - Producătorul va garanta calitatea şi buna funcţionare a produsului timp de 24 luni de la punerea în funcţiune sau de 36 luni de la data livrarii.	

	- Produsul va corespunde normelor tehnice şi standardelor europene.	- Produsul va corespunde normelor tehnice şi standardelor europene.	
5.	Condiţii cu caracter tehnic: - Nu vor fi luate în consideraţie decât ofertele însoţite de documentaţie completă pentru selecţie şi montaj în limba română. - Vor fi anexate: • instrucţiuni de montaj (scheme de conectare, broşuri, cataloage); • instrucţiuni de exploatare; • buletine de încercări, verificări, probe; • declaratie de conformitate.	Condiţii cu caracter tehnic: - Nu vor fi luate în consideraţie decât ofertele însoţite de documentaţie completă pentru selecţie şi montaj în limba română. - Vor fi anexate: • instrucţiuni de montaj (scheme de conectare, broşuri, cataloage); • instrucţiuni de exploatare; • buletine de încercări, verificări, probe; declaratie de conformitate.	

Product Data Sheet
00813-0100-4690, Rev QB
October 2021

Rosemount™ 2088 Absolute and Gauge Pressure Transmitter

- Performance of 0.065 percent with high accuracy option
- Lightweight, compact design for cost-effective installation
- Protocols available include 4–20 mA HART® and 1–5 Vdc HART Low Power
- Absolute and gauge pressure ranges up to 4,000 psi (276 bar)
- Rangeability of 50:1

ROSEMOUNT™

EMERSON™

Specifications

Performance specifications

For zero-based spans, reference conditions, silicone oil fill, and 316L SST isolating diaphragm

Reference accuracy

±0.075 percent of calibrated span. Includes combined effects of linearity, hysteresis, and repeatability

±0.065 percent of calibrated span (high accuracy option – P8)

For spans less than 10:1, accuracy = $\pm\left[0.009\left(\frac{URL}{Span}\right)\right]$ percent of span

Ambient temperature effect

Expressed as a total effect per 50 °F (28 °C)

Total effect includes zero and span effects

± (0.15 percent URL + 0.15 percent of span)

Stability

Ranges 2–4: ±0.10 percent of URL for three years

Range 1: ±0.10 percent of URL for one year

Warranty

Warranty details can be found in Emerson Terms & Conditions of Sale.

For all Rosemount 2088 models:

- One-year limited warranty is standard.
- Extended three-year and five-year limited warranties available if ordered (select option WR3 or WR5 in model string respectively).

Note
Goods are warranted for 12 months from the date of initial installation or 18 months from the date of shipment by seller, whichever period expires first.

Note
Three-year and five-year warranty period begins on date of shipment by seller.

Vibration effect

Less than ±0.1 percent of URL when tested per the requirements of IEC60770-1 field or pipeline with high vibration level (10–60 Hz 0.21 mm displacement peak amplitude/60–2000 Hz 3g)

Power supply effect

Less than ±0.005 percent of calibrated span per volt change in voltage at the transmitter terminals.

Electromagnetic compatibility

Meets all industrial environment requirements of EN61326 and NAMUR NE-21. Maximum deviation <1 percent span during EMC disturbance.

Note
NAMUR NE-21 does not apply to Low-Power (Transmitter output option code N).

Note
During surge event, device may exceed maximum EMC deviation limit or reset; however, device will self-recover and return to normal operation within specified start-up time.

Mounting position effect

Zero shifts to ±2.5 inH_2O (6.22 mbar), which can be zeroed

Span: no effect

Transient protection

Tested in accordance with IEEE C62.41.2-2002, Location Category B

6 kV crest (0.5 µs – 100 kHz)

3 kA crest (8 × 20 microseconds)

6 kV crest (1.2 × 50 microseconds)

General specifications

Tested to IEC 801-3

Functional specifications

Table 1: Rosemount 2088 Range Values

Range	Minimum span	Upper (URL)	Lower (LRL)	Lower[1] (LRL) (gauge)
1	0.60 psi (41.37 mbar)	30.00 psi (2.07 bar)	0 psia (0 bar)	–14.70 psig (–1.01 bar)
2	3.00 psi (206.85 mbar)	150.00 psi (10.34 bar)	0 psia (0 bar)	–14.70 psig (–1.01 bar)
3	16.00 psi (1.11 bar)	800.00 psi (55.16 bar)	0 psia (0 bar)	–14.70 psig (–1.01 bar)
4	80.00 psi (5.52 bar)	4000.00 psi (275.79 bar)	0 psia (0 bar)	–14.70 psig (–1.01 bar)

(1) *Assumes atmospheric pressure of 14.70 psia (1.01 bar-a).*

Output

Code S: 4–20 mA Code N: 1–5 Vdc, Low Power

Outputs are directly proportional to the input pressure

Selectable HART

Digital communications based on HART Revision 5 (default) or Revision 7 (option code HR7) protocol can be selected. The HART revision can be switched in the field using any HART based configuration tool or the optional local operator interface (LOI).

Service

Liquid, gas, and vapor applications

Power supply

External power supply required. Transmitter operates on 10.5–42.4 Vdc with no load (5.8-28 V for Low Power). Reverse polarity protection is standard.

Load limitations

Reverse polarity protection is standard. Maximum loop resistance is determined by the power supply voltage as described by the following equations:

Figure 2: Maximum Loop Resistance

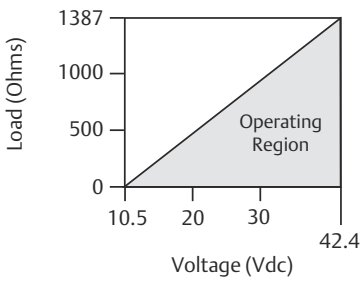

Maximum loop resistance = 43.5 (Power supply voltage – 10.5)

The Field Communicator requires a minimum loop resistance of 250 Ω for communication.

Indication

Optional two-line LOI/LCD display

Zero and span adjustment requirements

Zero and span values can be set anywhere within the range limits stated in Table 1. Span must be greater than or equal to the minimum span stated in Table 1.

LOI

The LOI utilizes a two-button menu with internal and external configuration buttons. Internal buttons are always configured for LOI. External buttons can be configured for either LOI, (option code M4), analog zero and span (option code D4) or digital zero trim (option code DZ) for LOI configuration menu.

Current draw

Output code N: ≤ 3 mA

Overpressure limits

Range 1: 120 psig max

All other ranges: two times the URL

Burst pressure

11,000 psi for all ranges

Zero elevation and suppression

Zero can be suppressed between atmosphere for gage transmitters or zero psia for absolute transmitters and upper range limit, provided the calibrated span is equal to or greater than the minimum span, and the upper range value does not exceed the upper range limit.

Dynamic performance

Total response time: 145 milliseconds Update rate: 22 times per second minimum

Temperature limits

Ambient

–40 to 185 °F (–40 to 85 °C)

With LCD display: –40 to 176 °F (–40 to 80 °C)

Note
For the output code N, LCD display may not be readable and LCD display updates will be slower at temperatures below –22 °F (–30 °C).

Storage

–50 to 230 °F (–46 to 110 °C)

With LCD display: –40 to 185 °F (–40 to 85 °C)

Note
If storage temperature is above 185 °F (85 °C), perform a sensor trim prior to installation.

Process

Silicone fill sensor: –40 to 250 °F (–40 to 121 °C)

Inert fill sensor: –22 to 250 °F (–30 to 121 °C)

Note
220 °F (104 °C) limit in vacuum service; 130 °F (54 °C) for pressures below 0.5 psia.

Note
Process temperatures above 185 °F (85 °C) require derating the ambient limits by a 1.5:1 ratio. For example, for process temperature of 195 °F (91 °C), new ambient temperature limit is equal to 170 °F (77 °C). This can be determined as follows: (195 °F – 185 °F) × 1.5 = 15 °F, 185 °F – 15 °F = 170 °F

Humidity limits

0–100 percent relative humidity

Volumetric displacement

Less than 0.0005 in^3 (0.008 cm^3)

Damping

Analog output response time to a step change is user-selectable from 0 to 60 seconds for one time constant. Software damping is in addition to sensor module response time.

Turn-on time

2.0 seconds, no warm-up required

Transmitter security

Activating the transmitter security function prevents changes to the transmitter configuration, including local zero and span adjustments. Security is activated by an internal switch.

Failure mode alarm

If self-diagnostics detect a sensor or microprocessor failure, the analog signal will be driven either high or low to alert the user. High or low failure mode is user-selectable with a jumper on the transmitter. The values to which the transmitter drives its output in failure mode depend on whether it is factory-configured to standard or NAMUR-compliant operation. The values for each are as follows:

Table 2: Standard Operation

Output code	Linear output	Fail high	Fail low
S	3.9 ≤ I ≤ 20.8	I ≥ 21.75 mA	I ≤ 3.75 mA
N	0.97 ≤ V ≤ 5.2	V ≥ 5.4 V	V ≤ 0.95 V

Table 3: NAMUR-Compliant Operation

Output code	Linear output	Fail high	Fail low
S	3.8 ≤ I ≤ 20.5	I ≥ 22.5 mA	I ≤ 3.6 mA

Physical specifications

Material selection

Emerson provides a variety of Rosemount product with various product options and configurations including materials of construction that can be expected to perform well in a wide range of applications. The Rosemount product information presented is intended as a guide for the purchaser to make an appropriate selection for the application. It is the purchaser's sole responsibility to make a careful analysis of all process parameters (such as all chemical components, temperature, pressure, flow rate, abrasives, contaminants, etc.), when specifying product, materials, options, and components for the particular application. Emerson is not in a position to evaluate or guarantee the compatibility of the process fluid or other process parameters with the product, options, configuration or materials of construction selected.

Electrical connections

½–14 NPT, M20 x 1.5 (CM20), or G½ female (PF ½ female) conduit entry

Note
Consists of a ½-14NPT housing with a G½ adapter.

Process connections

½–14 NPT female, DIN 16288 G½ male, RC ½ female (PT ½ female), M20 x 1.5 (CM20) male

Process-wetted parts

Isolating diaphragm

316L SST (UNS S31603), Alloy C-276 (UNS N10276)

Process connector

316L stainless steel CF-3M (Cast version of 316L SST, material per ASTM_A743) or Alloy C-276

Non-wetted parts

Electronics housing

Low-copper aluminum

Enclosures meet NEMA® Type 4X, IP66, and IP68 when properly installed

Paint for aluminum housing

Polyurethane

Cover O-rings

Buna-N

Fill fluid

Silicone or inert fill

Weight

Output code S and N: approximately 2.44 lb (1.11 kg)

Product certifications

Rev 1.18

European Directive Information

A copy of the EU Declaration of Conformity can be found at the end of the Quick Start Guide. The most recent revision of the EU Declaration of Conformity can be found at Emerson.com/Rosemount.

Ordinary Location Certification

As standard, the transmitter has been examined and tested to determine that the design meets the basic electrical, mechanical, and fire protection requirements by a nationally recognized test laboratory (NRTL) as accredited by the Federal Occupational Safety and Health Administration (OSHA).

North America

E5 USA Explosionproof (XP) and Dust–Ignitionproof (DIP)

Certificate 1V2A8.AE

Standards FM Class 3600 – 2011, FM, Class 3615 – 2006, FM Class 3616 – 2011, FM Class 3810 – 2005, ANSI/NEMA 250 – 1991

Markings XP CL I, DIV 1, GP B, C, D; DIP CL II, DIV 1, GP E, F, G; CL III; T5(–40 °C ≤ T_a ≤ +85 °C); Factory Sealed; Type 4X

I5 USA Safety (IS) and Nonincendive (NI)

Certificate 1015441

Standards FM Class 3600 – 2011, FM Class 3610 – 2010, FM Class 3611 – 2004, FM Class 3810 – 2005

Markings IS CL I, DIV 1, GP A, B, C, D; CL II, DIV 1, GP E, F, G; Class III; DIV 1 when connected per Rosemount drawing 02088–1024; NI CL 1, DIV 2, GP A, B, C, D; T4(–50 °C ≤ T_a ≤ +70 °C); Type 4x

C6 Canada Explosionproof, Intrinsic Safety and Division 2, Dust–Ignitionproof

Certificate 1015441

Standards CAN/CSA C22.2 No. 0–M91 (R2001), CSA Std C22.2 No. 25–1966, CSA Std C22.2 No. 30–M1986, CAN/CSA–C22.2 No. 94–M91, CSA Std C22.2 No. 142–M1987, CAN/CSA–C22.2 No. 157–92, CSA Std C22.2 No. 213–M1987, ANSI–ISA–12.27.01–2003

Markings Explosionproof for Class I, Division 1, Groups B, C and D; Class II, Groups E, F, and G; Class III; Intrinsically Safe Class I, Division 1 when connected in accordance with Rosemount drawing 02088–1024, Temperature Code T3C; Ex ia; Class I Division 2 Groups A, B, C and D; Type 4X; Factory Sealed; Single Seal

Europe

ED ATEX Flameproof

Certificate	KEMA97ATEX2378X
Standards	EN60079–0:2012 + A11:2013, EN60079–1:2014, EN60079–26:2015
Markings	Ⓔx II ½ G Ex db IIC T6....T4, Ga/Gb, T6(–60 °C ≤ T_a ≤ +70 °C), T4/T5(–60 °C ≤ T_a ≤ +80 °C)

Table 4: Process Connection Temperature

Temperature class	Process connection temperature	Ambient temperature
T6	–60 to +70 °C	–60 to +70 °C
T5	–60 to +80 °C	–60 to +80 °C
T4	–60 to +120 °C	–60 to +80 °C

Special Conditions for Safe Use (X):

1. This device contains a thin wall diaphragm. Installation, maintenance and use shall take into account the environmental conditions to which the diaphragm will be subjected. The manufacturer's instructions for installation and maintenance shall be followed in detail to assure safety during its expected lifetime.
2. Flameproof joints are not intended for repair.
3. Non–standard paint options may cause risk from electrostatic discharge. Avoid installations that could cause electrostatic build–up on painted surfaces, and only clean the painted surfaces with a damp cloth. If paint is ordered through a special option code, contact the manufacturer for more information.

I1 ATEX Intrinsic Safety

Certificate	BAS00ATEX1166X
Standards	EN60079–0:2012 + A11:2013, EN60079–11:2012
Markings	Ⓔx II 1 G Ex ia IIC T4 Ga (–55 °C ≤ T_a ≤ +70 °C)

Table 5: Input Parameters

Parameter	HART
Voltage U_i	30 V
Current I_i	200 mA
Power P_i	0.9 W
Capacitance C_i	0.012 µF

Special Conditions for Safe Use (X):

1. The apparatus is not capable of withstanding the 500 V insulation test required by EN60079–11. This must be taken into account when installing the apparatus.
2. The enclosure may be made of aluminum alloy and given a protective polyurethane paint finish; however, care should be taken to protect it from impact or abrasion if located in a Zone 0 environment.

N1 ATEX Type n

Certificate	BAS00ATEX3167X
Standards	EN60079–0:2012 + A11:2013, EN60079–15:2010
Markings	Ⓔx II 3 G Ex nA IIC T5 Gc (–40 °C ≤ T_a ≤ +70 °C)

Special Condition for Safe Use (X):

1. When fitted with a transient suppression terminal block, the equipment is not capable of withstanding the 500V insulation test that is required by EN60079–15. This must be taken into account when installing the apparatus.

ND ATEX Dust

Certificate	BAS01ATEX1427X
Standards	EN60079–0:2012 + A11:2013, EN60079–31:2009
Markings	Ⓔx II 1 D Ex t IIIC T50 °C T_{500} 60 °C Da

Special Conditions for Safe Use (X):

1. Cable entries must be used which maintain the ingress protection of the enclosure to at least IP66
2. Unused cable entries must be filled with suitable blanking plugs which maintain the ingress protection of the enclosure to at least IP66
3. Cable entries and blanking plugs must be suitable for the ambient range of the apparatus and capable of withstanding a 7J impact test.

International

E7 IECEx Flameproof

Certificate	IECEx KEM 06.0021X
Standards	IEC 60079–0:2011, IEC60079–1:2014, IEC60079–26:2014
Markings	Ex d IIC T6...T4 Ga/Gb, T6(–60 °C ≤ T_a ≤ +70 °C), T4/T5 (–60 °C ≤ T_a ≤ +80 °C)

Special Conditions for Safe Use (x):

1. This device contains a thin wall diaphragm. Installation, maintenance and use shall take into account the environmental conditions to which the diaphragm will be subjected. The manufacturer's instructions for installation and maintenance shall be followed in detail to assure safety during its expected lifetime.
2. Flameproof joints are not intended for repair.
3. Non–standard paint options may cause risk from electrostatic discharge. Avoid installations that could cause electrostatic build–up on painted surfaces, and only clean the painted surfaces with a damp cloth. If paint is ordered through a special option code, contact the manufacturer for more information.

I7 IECEx Intrinsic Safety

Certificate	IECEx BAS 12.0071X
Standards	IEC60079–0:2011, IEC60079–11:2011
Markings	Ex ia IIC T4 Ga (–55 °C ≤ T_a ≤ +70 °C)

Table 6: Input Parameters

Parameter	HART
Voltage U_i	30 V
Current I_i	200 mA
Power P_i	0.9 W
Capacitance C_i	0.012 µF

Special Conditions for Safe Use (X):

1. When fitted with a transient suppression terminal block, the Rosemount 2088 is incapable of passing the 500 V isolation test. This must be taken into account during installation.
2. The enclosure may be made of aluminum alloy and given a protective polyurethane paint finish; however, care should be taken to protect it from impact or abrasion if located in a Zone 0 environment.

N7 IECEx Type n

Certificate	IECEx BAS 12.0072X
Standards	IEC60079–0:2011, IEC60079–15:2010
Markings	Ex nA IIC T5 Gc (–40 °C ≤ T_a ≤ +70 °C)

Special Condition for Safe Use (X):

1. When fitted with a transient suppression terminal block, the Rosemount 2088 is incapable of passing the 500 V isolation test. This must be taking into account during installation.

NK IECEx Dust

Certificate	IECEx BAS12.0073X
Standards	IEC60079–0:2011, IEC60079–31:2008
Markings	Ex t IIIC T50 °C T_{500} 60 °C Da

Table 7: Input Parameter

Parameter	HART
Voltage U_i	36 V

Special Conditions For Safe Use (x):

1. Cable entries must be used which maintain the ingress protection of the enclosure to at least IP66.
2. Unused cable entries must be filled with suitable blanking plugs which maintain the ingress protection of the enclosure to at least IP66.
3. Cable entries and blanking plugs must be suitable for the ambient range of the apparatus and capable of withstanding a 7 J impact.

Brazil

E2 INMETRO Flameproof

Certificate	UL–BR 15.0728X
Standards	ABNT NBR IEC60079–0:2013, ABNT NBR IEC 60079–1:2016, ABNT NBR IEC 60079–26:2016
Markings	Ex db IIC T6...T4 Ga/Gb, T4/T5(–60 °C ≤ T_a ≤ +80 °C), T6(–60 °C ≤ T_a ≤ +70 °C)

Table 8: Process Connection Temperature

Temperature class	Process connection temperature	Ambient temperature
T6	–60 to +70 °C	–60 to +70 °C
T5	–60 to +80 °C	–60 to +80 °C
T4	–60 to +120 °C	–60 to +80 °C

Special Conditions For Safe Use (x):

1. This device contains a thin wall diaphragm less than 1mm thickness that forms a boundary between zone 0 (process connection) and zone 1 (all other parts of the equipment). The model code and data sheet are to be consulted for details of the diaphragm material. Installations, maintenance and use shall take into account the environmental conditions to which the diaphragm will be subjected. The manufacturer's instructions for installation and maintenance shall be followed in detail to assure safety during its expected lifetime.
2. Flameproof joints are not intended for repair.
3. Non–standard paint options may cause risk from electrostatic discharge. Avoid installations that could cause electrostatic build–up on painted surfaces, and only clean the painted surfaces with a damp cloth. If paint Is ordered through a special option code, contact the manufacturer for more information.

I2 INMETRO Intrinsic Safety

Certificate: UL–BR 13.0246X

Standards: ABNT NBR IEC60079–0:2008 + Errata 1:2011, ABNT NBR IEC60079–11:2009

Markings: Ex ia IIC T4 Ga (–55 °C ≤ T_a ≤ +70 °C)

Table 9: Input Parameters

Parameter	HART
Voltage U_i	30 V
Current I_i	200 mA
Power P_i	0.9 W
Capacitance C_i	0.012 µF

Special Conditions for Safe Use (X):

1. When fitted with a transient suppression terminal block, the Rosemount 2088 is incapable of passing the 500 V isolation test. This must be taken into account when installing the equipment.
2. The enclosure may be made of aluminum alloy and given a protective polyurethane paint finish; however, care should be taken to protect it from impact or abrasion if located in Zone 0.

China

E3 China Flameproof

Certificate GYJ15.1505

Standards GB3836.1–2010, GB3836.2–2010

Markings Ex d IIC T4/T6 Gb, T6(–20 °C ≤ T_a ≤ +40 °C), T4(–20 °C ≤ T_a ≤ +80 °C)

Special Conditions For Safe Use (X):

1. The ambient temperature is as follows:

T_a	Temperature class
–20 °C ≤ T_a ≤ 80 °C	T4
–20 °C ≤ T_a ≤ 40 °C	T6

2. The earth connection facility in the enclosure should be connected reliably.

3. During installation in hazardous location, cable glands, conduits, and blanking plugs, certified by state–appointed inspection bodies with Ex d IIC type of protection, should be used.
4. During installation, use and maintenance in explosive gas atmospheres, observe the warning “Do not open when energized”.
5. During installation, there should be no mixture harm to flameproof housing.
6. End user is not permitted to change any components insides, but to settle the problem in conjunction with manufacturer to avoid damage to the product.
7. Maintenance should be done in non–hazardous location.
8. During installation, use and maintenance of this product, observe the following standards: GB3836.13–2013, GB3836.15–2000, GB3836.16–2006, GB50257–2014.

I3 China Intrinsic Safety

Certificate	GYJ15.1507
Standards	GB3836.1–2010, GB3836.4–2010, GB3836.20–2010
Markings	Ex ia IIC T4 Ga

Special Conditions for Safe Use (X):

1. The enclosure may contain light metal,attention should be taken to avoid ignition hazard due to impact or friction when used in Zone 0.
2. When transient protection board is chosen (Option Code T1),this apparatus is not capable of withstanding the 500V r.m.s insulation test required by Clause 6.3.12 of GB3836.4–2010.

N3 China Type n

Certificate	GYJ15.1108X
Standards	GB3836.1–2010, GB3836.8–2003
Markings	Ex nA IIC T5 Gc (–40 °C ≤ T_a ≤ +70 °C)

Special Condition For Safe Use (X):

1. When transient protection board is chosen (Option Code T1), this apparatus is not capable of withstanding the 500V r.m.s insulation test required by Clause 6.3.12 of GB3836.4–2010.

Korea

EP Korea Flameproof

Certificate	13–KB4BO–0020X, 10–KB4BO–0137X, 19–KA4BO–0989X
Markings	Ex d IIC T6...T4 Ga/Gb, T4/T5(–60 °C ≤ T_a ≤ +80 °C), T6(–60 °C ≤ T_a ≤ +70 °C)

Special Condition For Safe Use (X):

1. See certificate.

Japan

E4 Japan Flameproof

Certificate	TC20869, TC20870

Markings	Ex d IIC T5

Technical Regulations Customs Union (EAC)

EM EAC Flameproof

Certificate	EAEC RU C–US.EX01.B.00176
Markings	Ga/Gb Ex d IIC T4/T6 X, T4(–40 °C ≤ T_a ≤ +80 °C), T6(–40 °C ≤ T_a ≤ +40 °C)

Special Condition for Safe Use (X):

1. See certificate.

IM EAC Intrinsically Safe

Certificate:	EAEC RU C–US.EX01.B.00176
Markings:	0Ex ia IIC T4 Ga X (–55 °C ≤ T_a ≤ +70 °C)

Special Condition for Safe Use (X):

1. See certificate.

Combinations

K1	Combination of ED, I1, ND, and N1
K2	Combination of E2 and I2
K5	Combination of E5 and I5
K6	Combination of C6, ED, and I1
K7	Combination of E7, I7, NK, and N7
KB	Combination of K5 and C6
KM	Combination of EM and IM
KH	Combination of ED, I1, and K5

Conduit plugs and adapters

IECEx Flameproof and Increased Safety

Certificate	IECEx FMG 13.0032X
Standards	IEC60079–0:2011, IEC60079–1:2007–04, IEC60079–7:2006–07
Markings	Ex de IIC Gb

ATEX Flameproof and Increased Safety

Certificate	FM13ATEX0076X
Standards	EN60079–0:2012, EN60079–1:2007, IEC60079–7:2007
Markings	Ⓔx II 2 G Ex de IIC Gb

Table 10: Conduit Plug Thread Sizes

Thread	Identification mark
M20 × 1.5 – 6g	M20
½–14 NPT	½ NPT
G½A	G½

Table 11: Thread Adapter Thread Sizes

Male thread	Identification mark
M20 × 1.5 – 6H	M20
½–14 NPT	½–14 NPT
¾–14 NPT	¾–14 NPT
Female thread	**Identification mark**
M20 × 1.5 – 6H	M20
½–14 NPT	½–14 NPT
G½	G½

Special Conditions For Safe Use (X):

1. When the thread adapter or blanking plug is used with an enclosure in type of protection increased safety “e” the entry thread shall be suitably sealed in order to maintain the ingress protection rating (IP) of the enclosure.
2. The blanking plug shall not be used with an adapter.
3. Blanking Plug and Threaded Adapter shall be either NPT or Metric thread forms. G½ thread forms are only acceptable for existing (legacy) equipment installations.

Additional Certifications

SBS American Bureau of Shipping (ABS) Type Approval

Certificate 18–HS1814314–PDA

Intended Use Measurement of either gauge or absolute pressure for liquid, gas, and vapor.

ABS Rules 2014 Steel Vessels Rules 1–1–4/7.7, 1–1–Appendix 3, 4–8–3/1.7, 4–8–3/13.1, 4–8–3/13.3.1 & 13.3.2, 4–8–4/27.5.1

SBV Bureau Veritas (BV) Type Approval

Certificate 23156/B0 BV

Requirements Bureau Veritas Rules for the Classification of Steel Ships

Application Class notations: AUT–UMS, AUT–CCS, AUT–PORT and AUT–IMS; Pressure transmitter type 2088 cannot be installed on diesel engines

SDN Det Norske Veritas (DNV) Type Approval

Certificate TAA000004F

Intended Use DNV GL Rules for Classification – Ships and offshore units

Application

Location classes	
Temperature	D
Humidity	B
Vibration	A
EMC	B
Enclosure	D

SLL Lloyds Register (LR) Type Approval

Certificate 11/60002

Application Environmental categories ENV1, ENV2, ENV3, and ENV5

FISA TEHNICA E-TT
Traductor temperatura 4-20mA

Nr Crt.	Specificațiile tehnice impuse prin Caietul de sarcini	Corespondența propunerii tehnice cu specificațiile tehnice impuse prin Caietul de sarcini	Producător
0	1	2	3
1.	Parametrii tehnici si funcționali: - Senzor de temperatura Pt100 sau alt tip de senzor; - Domeniu de temperatura : -20° C ... +100° C; - Clasa de exactitate : clasa B sau mai buna; - Timp de răspuns : Max 250 ms - Material tija : inox - Afișaj cu display local 5 digiți ; - Ieșire semnal : 4-20 mA protocol Hart; - Grad de protecție : minim IP 65 - Alimentare: max.30Vc.c (tipic 24 Vc.c); - Temperatura mediu ambiant: -25° C ... +50° C;	Parametrii tehnici si funcționali: - Senzor de temperatura Pt100 sau alt tip de senzor; - Domeniu de temperatura : -20° C ... +100° C; - Clasa de exactitate : clasa B sau mai buna; - Timp de răspuns : Max 250 ms - Material tija : inox - Afișaj cu display local 5 digiți ; - Ieșire semnal : 4-20 mA protocol Hart; - Grad de protecție : minim IP 65 - Alimentare: max.30Vc.c (tipic 24 Vc.c); - Temperatura mediu ambiant: -25° C ... +50° C;	Rosemount
2.	Specificaţii de performanţă şi condiţii privind siguranta în exploatare: - Construcție robusta conform normelor de siguranță; - Stabilitate caracteristici metrologice +/- 0,2% minim 3 ani; - Certificat de calibrare in 5 puncte - Certificare pentru mediu cu pericol de explozie: grupa II zona II - Temperatura maxima de suprafața corespunzătoare clasei T4 pentru Ex; - Daca se livreaza cu protecție intrinseca atunci se va livra si bariera de potențial aferenta	Specificaţii de performanţă şi condiţii privind siguranta în exploatare: - Construcție robusta conform normelor de siguranță; - Stabilitate caracteristici metrologice +/- 0,2% minim 3 ani; - Certificat de calibrare in 5 puncte - Certificare pentru mediu cu pericol de explozie: grupa II zona II - Temperatura maxima de suprafața corespunzătoare clasei T4 pentru Ex; - Daca se livreaza cu protecție intrinseca atunci se va livra si bariera de potențial aferenta	
3.	Condiţii privind conformitatea cu standarde relevante: - Standarde din seria SR EN 60079 funcţie de gradul de protecţie SR EN 60529	Condiţii privind conformitatea cu standarde relevante: - Standarde din seria SR EN 60079 funcţie de gradul de protecţie SR EN 60529	
4.	Condiţii de garanţie şi postgaranţie: - Producătorul va garanta calitatea şi buna funcţionare a produsului timp de 24 luni de la punerea în funcţiune sau de 36 luni de la data livrarii. - Produsul va corespunde normelor tehnice şi	Condiţii de garanţie şi postgaranţie: - Producătorul va garanta calitatea şi buna funcţionare a produsului timp de 24 luni de la punerea în funcţiune sau de 36 luni de la data livrarii. - Produsul va corespunde normelor tehnice	

	standardelor europene.	şi standardelor europene.	
5.	Condiţii cu caracter tehnic: - Nu vor fi luate în consideraţie decât ofertele însoţite de documentaţie completă pentru selecţie şi montaj în limba română. - Vor fi anexate: • instrucţiuni de montaj (scheme de conectare, broşuri, cataloage); • instrucţiuni de exploatare; • buletine de încercări, verificări, probe; • declaratie de conformitate.	Condiţii cu caracter tehnic: - Nu vor fi luate în consideraţie decât ofertele însoţite de documentaţie completă pentru selecţie şi montaj în limba română. - Vor fi anexate: • instrucţiuni de montaj (scheme de conectare, broşuri, cataloage); • instrucţiuni de exploatare; • buletine de încercări, verificări, probe; declaratie de conformitate.	

Product Data Sheet
00813-0100-4728, Rev WA
June 2021

Rosemount™ 644 Temperature Transmitter

The most versatile temperature transmitter

Reduce complexity and simplify the day-to-day operations of your diverse temperature applications with the versatile Rosemount 644 family of temperature transmitters. Make better decisions for your process with the new and easy-to-use Rosemount 644 Transmitter capabilities including: diagnostics, safety certification, integral transient protection, and display options.

ROSEMOUNT™

EMERSON™

Specifications

HART, FOUNDATION Fieldbus, and PROFIBUS PA Protocols

Functional specifications

Inputs

User-selectable; sensor terminals rated to 42.4 Vdc. See Accuracy example (FOUNDATION Fieldbus and PROFIBUS PA devices).

Output

Single two-wire device with either 4–20 mA/HART®, linear with temperature or input; or completely digital outputs with FOUNDATION™ Fieldbus communication (ITK 5.01 compliant), or PROFIBUS® PA (compliant with profile 3.02).

Isolation

Input/output isolation tested to 620 Vrms.

Local display options

LCD display An optional 11 digit, two-line integral LCD display operates with a floating or fixed decimal point. It displays engineering units (°F, °C, °R, K, Ohms and mV), mA, and percent of range. The display can be configured to alternate between selected display options. Display settings are pre-configured at the factory according to the standard transmitter configuration. They can be re-configured in the field using either HART, FOUNDATION Fieldbus, or PROFIBUS PA communications.

LCD display with LOI An optional 14-digit, two-line integral LCD display operates with a floating or fixed decimal point. The LOI includes all features and functionality available in the regular display with an added two-button configuration capability directly at the display interface. The LOI also has optional password protection for secure operations. The LOI is only available on the Rosemount 644 HART head mount and field mount transmitters.

For more information on the LOI configuration options or further functionality that the LOI offers, see the Rosemount 644 Temperature Transmitter Reference Manual.

Humidity limits

0–95 percent relative humidity

Update time

≤0.5 second per sensor

Accuracy (default configuration) PT 100

HART standard: ±0.15 °C

HART enhanced: ±0.1 °C

FOUNDATION Fieldbus: ±0.15 °C

PROFIBUS PA: ±0.15 °C

Physical specifications

Material selection

Emerson provides a variety of Rosemount product with various product options and configurations including materials of construction that can be expected to perform well in a wide range of applications. The Rosemount product information presented is intended as a guide for the purchaser to make an appropriate selection for the application. It is the purchaser's sole responsibility to make a careful analysis of all process parameters (such as all chemical components, temperature, pressure, flow rate, abrasives, contaminants, etc.), when specifying product, materials, options and components for the particular application. Emerson is not in a position to evaluate or guarantee the compatibility of the process fluid or other process parameters with the product, options, configuration or materials of construction selected.

Conformance to specifications (±3σ [Sigma])

Technology leadership, advanced manufacturing techniques, and statistical process control ensure specification conformance to at least ±3σ.

Table 8: Electrical Connections

Rosemount model	Power and sensor terminals
Head mount (HART®)	Captivated screw terminals permanently fixed to terminal block
Head mount (FOUNDATION™ Fieldbus/PROFIBUS® PA)	Compression screw terminals permanently fixed to the terminal block
Field mount (HART)	Captivated screw terminals permanently fixed to the terminal block
Rail mount (HART)	Compression screw permanently fixed to front panel

Table 9: Field Communicator Connections

Communication terminals	
Rosemount 644 head/field mount	Clips permanently fixed to terminal block
Rosemount 644 rail mount	Clips permanently fixed to front panel

Table 10: Materials of Construction

Electronics housing and terminal block	
Rosemount 644 head/ field mount	GE polyphenylene oxide glass reinforced GFN -2 or -3
Rosemount 644 rail mount	Polycarbonate
Enclosure (Options J1, J2, J5, J6, R1, R2, D1, and D2)	
Housing	Low-copper aluminum
Paint	Polyurethane
Cover O-ring	Buna-N

Materials of construction (stainless steel housing for biotechnology, pharmaceutical industries, and sanitary applications)

Housing and standard meter cover

- 316 SST

Cover O-ring

- Buna-N

Mounting

The Rosemount 644R attaches directly to a wall or a DIN rail. The Rosemount 644H installs in a connection head or universal head mounted directly on a sensor assembly, apart from a sensor assembly using a universal head, or to a DIN rail using an optional mounting clip.

Special mounting considerations

See mounting kits for Rosemount 644H for the special hardware that is available to:

- Mount a Rosemount 644H to a DIN rail (see Dimensional drawings).
- Retrofit a new Rosemount 644H to replace an existing Rosemount 644H Transmitter in an existing threaded sensor connection head (see Table 3).

Table 11: Weight

Code	Options	Weight
644H	HART, head mount transmitter	78 g (2.75 oz)
644H	FOUNDATION Fieldbus, head mount transmitter	92 g (3.25 oz)
644H	PROFIBUS PA, head mount transmitter	92 g (3.25 oz)
644R	HART, rail mount transmitter	174 g (6.14 oz)
M5	LCD display	34 g (1.2 oz)
M4	LCD display with local operator interface	34 g (1.2 oz)
J1, J2	Universal head, 3-conduits, standard cover	718 g (25.33 oz)
J1, J2	Universal head, 3-conduits, meter cover	826 g (29.14 oz)

Table 11: Weight *(continued)*

Code	Options	Weight
J3, J4	Cast SST universal head, 3-conduits, standard cover	2073 g (73.12 oz)
J3, J4	Cast SST universal head, 3-conduits, meter cover	2148 g (75.77 oz)
J5, J6	Aluminum 2-conduits, universal head, standard cover	520g (18.43 oz)
J5, J6	Aluminum 2-conduits, universal head, meter cover	604 g (21.27 oz)
J7, J8	Cast SST universal head 2-conduits, standard, cover	1673 g (59.0 oz)
J7, J8	Cast SST universal head 2-conduits, meter cover	1835 g (64.73 oz)
R1, R2	Aluminum connection head, standard cover	523 g (18.45 oz)
R1, R2	Aluminum connection head, meter cover	618 g (21.79 oz)
R3, R4	Cast SST connection head, standard cover	1615 g (56.97 oz)
R3, R4	Cast SST connection head, meter cover	1747 g (61.62 oz)
D1, D2	HART, field mount transmitter, aluminum housing, meter cover, standard cover	1128 g (39.79 oz)

Table 12: Weight (stainless steel housing for biotechnology, pharmaceutical industries, and sanitary applications)

Option codes	Standard cover	Meter cover
S1, S2, S3, S4	840 g (27 oz)	995 g (32 oz)

Enclosure ratings (Rosemount 644H/F)

All available enclosures are Type 4X, IP66, and IP68.

Sanitary housing surface

Surface finish is polished to 32 RMA. Laser etched product marking on housing and standard covers.

Performance specifications

Electromagnetic Compatibility (EMC)

Meets all industrial environment requirements of EN61326 and NAMUR NE-21. Maximum deviation <1% span during EMC disturbance.

Note
During surge event, device may exceed maximum EMC deviation limit or reset; however, device will self-recover and return to normal operation within specified start-up time.

Power supply effect

Less than ±0.005 percent of span per volt

Stability

RTDs and thermocouples have a stability of ±0.15 percent of output reading or 0.15 °C (whichever is greater) for 24 months.

When ordered with the P8 option code:

- RTDs: ±0.25 percent of reading or 0.25 °C, whichever is greater, for five years
- Thermocouples: ±0.5 percent of reading or 0.5 °C, whichever is greater, for five years

Self calibration

The analog-to-digital measurement circuitry automatically self-calibrates for each temperature update by comparing the dynamic measurement to extremely stable and accurate internal reference elements.

Table 13: Vibration effect

The Rosemount 644 HART® head mount and field mount are tested to the following specifications with no effect on performance per IEC 60770-1, 2010:

Frequency	Vibration
10–60 Hz	0.35 mm displacement
60–1000 Hz	5g (50 m/s^2) peak acceleration

The Rosemount 644 Fieldbus and PROFIBUS are tested to the following specifications with no effect on performance per IEC 60770-1: 1999:

Frequency	Vibration
10–60 Hz	0.21 mm displacement
60–2000 Hz	3 g peak acceleration

Table 14: Rosemount 644 Sensor Connections Diagrams

Emerson provides 4-wire sensors for all single element RTDs. You can use these RTDs in 3-wire configurations by leaving the unneeded leads disconnected and insulated with electrical tape.

HART head mount

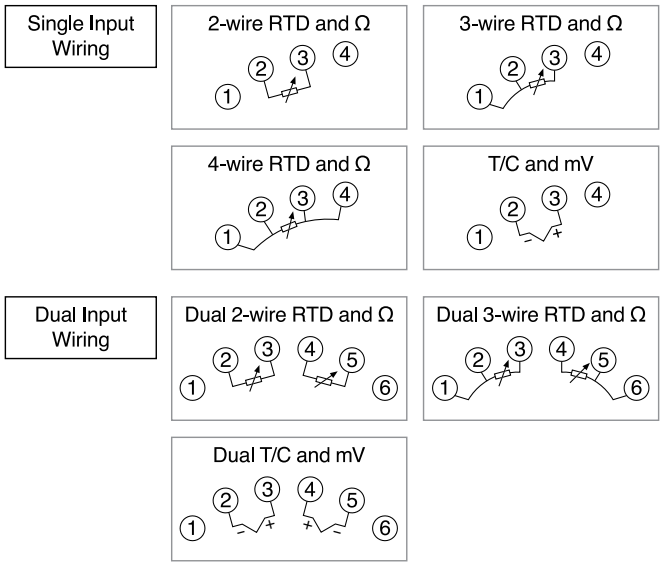

Table 14: Rosemount 644 Sensor Connections Diagrams *(continued)*

HART rail mount **Fieldbus** **PROFIBUS** 	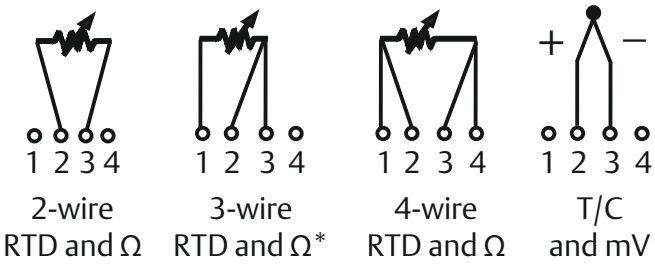
HART field mount 	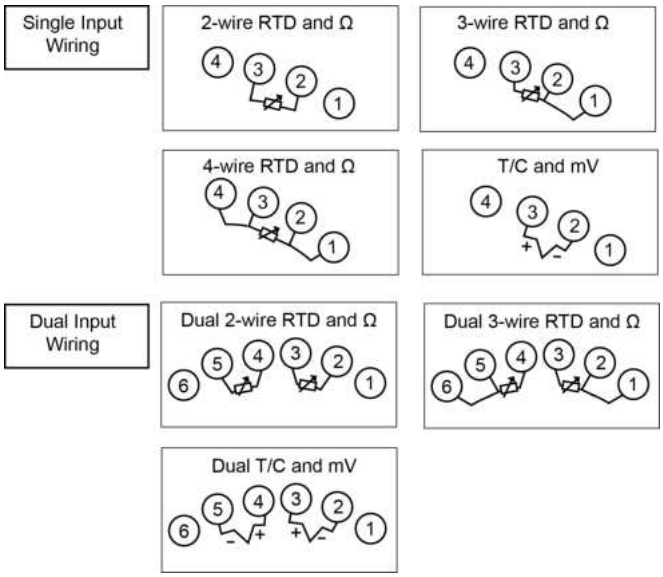

FOUNDATION Fieldbus specifications

Function blocks

Resource block

The resource block contains physical transmitter information including available memory, manufacture identification, device type, software tag, and unique identification.

Transducer block

The transducer block contains the actual temperature measurement data, including sensor 1 and terminal temperature. It includes information about sensor type and configuration, engineering units, linearization, reranging, damping, temperature correction, and diagnostics.

LCD display block

The LCD display block is used to configure the local display, if an LCD display is being used.

Analog input (AI)

- Processes the measurement and makes it available on the Fieldbus segment.
- Allows filtering, alarming, and engineering unit changes.

PID block

The transmitter provides control functionality with one PID function block in the transmitter. The PID block can be used to perform single loop, cascade, or feedforward control in the field.

Block	Execution time (milliseconds)
Resource	N/A
Transducer	N/A
LCD display block	N/A
Analog input 1	45
Analog Input 2	45
PID 1	60

Turn-on time

Performance within specifications in less than 20 seconds after power is applied, when damping value is set to zero seconds.

Status

If self-diagnostics detect a sensor burnout or a transmitter failure, the status of the measurement will be updated accordingly. Status may also send the AI output to a safe value.

Power supply

Powered over FOUNDATION Fieldbus with standard Fieldbus power supplies. The transmitter operates between 9.0 and 32.0 Vdc, 12 mA maximum.

Alarms

The AI function block allows the user to configure the alarms to HI-HI, HI, LO, or LO-LO with hysteresis settings.

Backup Link Active Scheduler (LAS)

The transmitter is classified as a device link master, which means it can function as a LAS if the current link master device fails or is removed from the segment.

The host or other configuration tool is used to download the schedule for the application to the link master device. In the absence of a primary link master, the transmitter will claim the LAS and provide permanent control for the H1 segment.

FOUNDATION Fieldbus parameters

Schedule entries	25
Links	16
Virtual Communications Relationships (VCR)	12

PROFIBUS PA specifications

Function blocks

Physical block

The physical block contains physical transmitter information including manufacturer identification, device type, software tag, and unique identification.

Transducer block

The transducer block contains the actual temperature measurement data, including sensor 1 and terminal temperature. It includes information about sensor type and configuration, engineering units, linearization, re-ranging, damping, temperature correction, and diagnostics.

Analog Input block (AI)

The AI block processes the measurement and makes it available on the PROFIBUS segment. Allows filtering, alarming, and engineering unit changes.

Turn-on time

Performance within specifications in less than 20 seconds after power is applied, when damping value is set to zero seconds.

Powersupply

Powered over PROFIBUS with standard Fieldbus power supplies. The transmitter operates between 9.0 and 32.0 Vdc,12 mA maximum.

Alarms

The AI function block allows the user to configure the alarms to HI-HI, HI, LO, or LO-LO with hysteresis settings.

4–20 mA/HART specifications

Power supply

External power supply required. Transmitters operate on 12.0–42.4 Vdc transmitter terminal voltage (with 250 ohm load, 18.1 Vdc power supply voltage is required). Transmitter power terminals rated to 42.4 Vdc.

Figure 2: Load Limitations

Maximum load = 40.8 × (supply voltage - 12.0)(1)

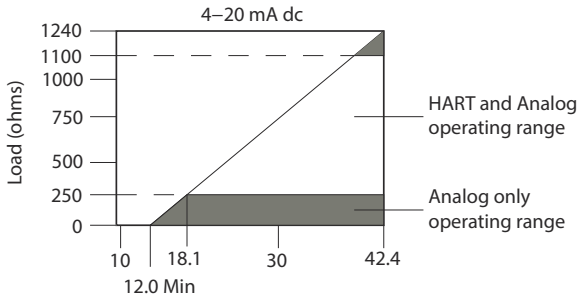

(1) *Without transient protection (optional).*

Note
HART® Communication requires a loop resistance between 250 and 1100 Ohms. Do not communicate with the transmitter when power is below 12 Vdc at the transmitter terminals.

Temperature limits

Description	Operating limit(1)	Storage limit(1)
With LCD display (2)	–40 to 185 °F –40 to 85 °C	–50 to 185 °F –45 to 85 °C
Without LCD display	–40 to 185 °F –40 to 85 °C	–58 to 250 °F –50 to 120 °C

(1) *The lower operating and storage temperature limit of a transmitter with option code BR6 is –76 °F (–60 °C).*
(2) *LCD display may not be readable and display updates will be slower at temperatures below –22 °F (–30 °C).*

Hardware and software failure mode

The Rosemount 644 features software driven alarm diagnostics and an independent circuit, which is designed to provide backup alarm output if the microprocessor software fails. The alarm direction (HI/LO) is user-selectable using the failure mode switch. If failure occurs, the position of the switch determines the direction in which the output is driven (HI or LO). The switch feeds into the digital-to-analog (D/A) converter, which drives the proper alarm output even if the microprocessor fails. The values at which the transmitter software drives its output in failure mode depends on whether it is configured to standard, custom, or NAMUR-compliant (NAMUR recommendation NE 43, June 1997) operation. Table 15 shows the configuration alarm ranges.

Table 15: Available Alarm Range

Units - mA	Min	Max	Rosemount	Namur
High alarm	21	23	21.75	21
Low alarm(1)	3.5	3.75	3.75	3.6
High saturation	20.5	20.9(2)	20.5	20.5
Low saturation(1)	3.7(3)	3.9	3.9	3.8

(1) *Requires 0.1 mA gap between low alarm and low saturation values.*

(2) *Rail mount transmitters have a high saturation max of 0.1 mA less than the high alarm setting, with a max value of 0.1 mA less than the high alarm max.*
(3) *Rail mount transmitters have a low saturation min of 0.1 mA greater than the low alarm setting, with a minimum of 0.1 mA greater than the low alarm min.*

Custom alarm and saturation level

Custom factory configuration of alarm and saturation level is available with option code C1 for valid values. These values can also be configured in the field using a Field Communicator.

Turn-on time

Performance within specifications in less than six seconds after power is applied, when damping value is set to zero seconds.

External transient protection

The Rosemount 470 Transient Protector prevents damage from transients induced by lightning, welding, or heavy electrical equipment. For more information, refer to the Rosemount 470 Transient Protector Product Data Sheet. Transient Protection (option code T1)

The transient protector helps to prevent damage to the transmitter from transients induced on the loop wiring by lightning, welding, heavy electrical equipment, or switch gears. The transient protection electronics are contained in an add-on assembly that attaches to the standard transmitter terminal block. The external ground lug assembly (code G1) is included with the transient protector. The transient protector has been tested per the following standard:

- IEEE C62.41-2002 (IEEE 587)/Location Categories B3. 6 kV/3 kA peak (1.2 50 Ω × Wave 8 20 Ω s Combination Wave) 6 kV/0.5 kA peak (100 kHz Ring Wave) EFT, 4 kVpeak, 2.5 kHz, 5 × 50 nS
- Loop resistance added by protector: 22 ohms max.
- Nominal clamping voltages: 90 V (common mode), 77 V (normal mode)

Standard accuracy

Table 16: Rosemount 644 Transmitter Accuracy

Sensor options	Sensor reference	Input ranges		Minimum span (1)		Digital accuracy (2)		D/A accuracy(3)(4)
2-, 3-, 4-wire RTDs		°C	°F	°C	°F	°C	°F	
Pt 100 (α = 0.00385)	IEC 751	–200 to 850	–328 to 1562	10	18	± 0.15	± 0.27	± 0.03% of span
Pt 200 (α = 0.00385)	IEC 751	–200 to 850	–328 to 1562	10	18	± 0.15	± 0.27	± 0.03% of span
Pt 500 (α = 0.00385)	IEC 751	–200 to 850	–328 to 1562	10	18	± 0.19	± 0.34	± 0.03% of span
Pt 1000 (α = 0.00385)	IEC 751	–200 to 300	–328 to 572	10	18	± 0.19	± 0.34	± 0.03% of span
Pt 100 (α = 0.003916)	JIS 1604	–200 to 645	–328 to 1193	10	18	± 0.15	± 0.27	± 0.03% of span
Pt 200 (α = 0.003916)	JIS 1604	–200 to 645	–328 to 1193	10	18	± 0.27	± 0.49	± 0.03% of span
Ni 120	Edison Curve No. 7	–70 to 300	–94 to 572	10	18	± 0.15	± 0.27	± 0.03% of span
Cu 10	Edison Copper Winding No. 15	–50 to 250	–58 to 482	10	18	± 1.40	± 2.52	± 0.03% of span
Pt 50 (α=0.00391)	GOST 6651-94	–200 to 550	–328 to 1022	10	18	± 0.30	± 0.54	± 0.03% of span

Table 16: Rosemount 644 Transmitter Accuracy *(continued)*

Pt 100 (α=0.00391)	GOST 6651-94	–200 to 550	–328 to 1022	10	18	± 0.15	± 0.27	± 0.03% of span
Cu 50 (α=0.00426)	GOST 6651-94	–50 to 200	–58 to 392	10	18	± 1.34	± 2.41	± 0.03% of span
Cu 50 (α=0.00428)	GOST 6651-94	–185 to 200	–301 to 392	10	18	± 1.34	± 2.41	± 0.03% of span
Cu 100 (α=0.00426)	GOST 6651-94	–50 to 200	–58 to 392	10	18	± 0.67	± 1.20	± 0.03% of span
Cu 100 (α=0.00428)	GOST 6651-94	–185 to 200	–301 to 392	10	18	± 0.67	± 1.20	± 0.03% of span
Thermocouples (5)								
Type B (6)	NIST Monograph 175, IEC 584	100 to 1820	212 to 3308	25	45	± 0.77	± 1.39	± 0.03% of span
Type E	NIST Monograph 175, IEC 584	–200 to 1000	–328 to 1832	25	45	± 0.20	± 0.36	± 0.03% of span
Type J	NIST Monograph 175, IEC 584	–180 to 760	–292 to 1400	25	45	± 0.35	± 0.63	± 0.03% of span
Type K (7)	NIST Monograph 175, IEC 584	–180 to 1372	–292 to 2501	25	45	± 0.50	± 0.90	± 0.03% of span
Type N	NIST Monograph 175, IEC 584	–200 to 1300	–328 to 2372	25	45	± 0.50	± 0.90	± 0.03% of span
Type R	NIST Monograph 175, IEC 584	0 to 1768	32 to 3214	25	45	± 0.75	± 1.35	± 0.03% of span
Type S	NIST Monograph 175, IEC 584	0 to 1768	32 to 3214	25	45	± 0.70	± 1.26	± 0.03% of span
Type T	NIST Monograph 175, IEC 584	–200 to 400	–328 to 752	25	45	± 0.35	± 0.63	± 0.03% of span
Type L	DIN 43710	–200 to 900	–328 to 1652	25	45	± 0.35	± 0.63	± 0.03% of span
Type U	DIN 43710	–200 to 600	–328 to 1112	25	45	± 0.35	± 0.63	± 0.03% of span
Type C	W5Re/W26Re ASTM E 988-96	0 to 2000	32 to 3632	25	45	± 0.70	± 1.26	± 0.03% of span
Type L	GOST R 8.585-2001	–200 to 800	–392 to 1472	25	45	± 0.25	± 0.45	± 0.03% of span
Other input types								
Millivolt input		–10 to 100 mV		3 mV		± 0.015 mV		± 0.03% of span

Table 16: Rosemount 644 Transmitter Accuracy *(continued)*

2-, 3-, 4-wire Ohm input	0 to 2000 ohms	20 ohm	± 0.45 ohm	± 0.03% of span

(1) *No minimum or maximum span restrictions within the input ranges. Recommended minimum span will hold noise within accuracy specification with damping at zero seconds.*
(2) *Digital accuracy: Digital output can be accessed by the Field Communicator.*
(3) *Total analog accuracy is the sum of digital and D/A accuracies.*
(4) *Applies to HART/4–20 mA devices.*
(5) *Total digital accuracy for thermocouple measurement: sum of digital accuracy +0.25 °C (0.45 °F) (cold junction accuracy).*
(6) *Digital accuracy for NIST Type B is ±3.0 °C (±5.4 °F) from 100 to 300 °C (212 to 572 °F).*
(7) *Digital accuracy for NIST Type K is ±0.7 °C (±1.3 °F) from –180 to –90 °C (–292 to –130 °F).*

Accuracy example (HART devices)

When using a Pt 100 (α = 0.00385) sensor input with 0 to 100 °C span:

- Digital accuracy = ± 0.15 °C
- D/A accuracy = ± 0.15 °C of 100 °C or ± 0.15 °C
- Total accuracy = ± 0.18 °C

Accuracy example (FOUNDATION Fieldbus and PROFIBUS PA devices)

When using a Pt 100 (α = 0.00385) sensor input:

- Total accuracy = ±0.15 °C
- No D/A accuracy effects apply.

Table 17: Ambient Temperature Effect

Sensor options	Sensor reference	Input range (°C)	Temperature effects per 1.0 °C (1.8 °F) change in ambient temperature(1)(2)(3)	Range	D/A effect (4)
2-, 3-, 4-wire RTDs					
Pt 100 (α = 0.00385)	IEC 751	–200 to 850	0.003 °C (0.0054 °F)	Entire sensor input range	0.001% of span
Pt 200 (α = 0.00385)	IEC 751	–200 to 850	0.004 °C (0.0072 °F)	Entire sensor input range	0.001% of span
Pt 500 (α = 0.00385)	IEC 751	–200 to 850	0.003 °C (0.0054 °F)	Entire sensor input range	0.001% of span
Pt 1000 (α = 0.00385)	IEC 751	–200 to 300	0.003 °C (0.0054 °F)	Entire sensor input range	0.001% of span
Pt 100 (α = 0.003916)	JIS 1604	–200 to 645	0.003 °C (0.0054 °F)	Entire sensor input range	0.001% of span

Table 17: Ambient Temperature Effect *(continued)*

Sensor options	Sensor reference	Input range (°C)	Temperature effects per 1.0 °C (1.8 °F) change in ambient temperature(1)(2)(3)	Range	D/A effect (4)
Pt 200 (α = 0.003916)	JIS 1604	–200 to 645	0.004 °C (0.0072 °F)	Entire sensor input range	0.001% of span
Ni 120	Edison Curve No. 7	–70 to 300	0.003 °C (0.0054 °F)	Entire sensor input range	0.001% of span
Cu 10	Edison Copper Winding No. 15	–50 to 250	0.03 °C (0.054 °F)	Entire sensor input range	0.001% of span
Pt 50 (α = 0.00391)	GOST 6651-94	–200 to 550	0.004 °C (0.0072 °F)	Entire sensor input range	0.001% of span
Pt 100 (α = 0.00391)	GOST 6651-94	–200 to 550	0.002 °C (0.0036 °F)	Entire sensor input range	0.001% of span
Cu 50 (α = 0.00426)	GOST 6651-94	–50 to 200	0.008 °C (0.0144 °F)	Entire sensor input range	0.001% of span
Cu 50 (α = 0.00428)	GOST 6651-94	–185 to 200	0.008 °C (0.0144 °F)	Entire sensor input range	0.001% of span
Cu 100 (α = 0.00426)	GOST 6651-94	–50 to 200	0.004 °C (0.0072 °F)	Entire sensor input range	0.001% of span
Cu 100 (α = 0.00428)	GOST 6651-94	–185 to 200	0.004 °C (0.0072 °F)	Entire sensor input range	0.001% of span
Thermocouples					
Type B	NIST Monograph 175, IEC 584	100 to 1820	0.014 °C	T ≥ 1000 °C	0.001% of span
			0.032 °C – (0.0025% of (T – 300))	300 °C ≤ T < 1000 °C	0.001% of span
			0.054 °C – (0.011% of (T – 100))	100 °C ≤ T < 300 °C	0.001% of span
Type E	NIST Monograph 175, IEC 584	–200 to 1000	0.005 °C + (0.00043% of T)	All	0.001% of span

Table 17: Ambient Temperature Effect *(continued)*

Sensor options	Sensor reference	Input range (°C)	Temperature effects per 1.0 °C (1.8 °F) change in ambient temperature(1)(2)(3)	Range	D/A effect (4)
Type J	NIST Monograph 175, IEC 584	–180 to 760	0.0054 °C + (0.00029%of T)	T ≥ 0 °C	0.001% of span
			0.0054 °C + (0.0025% of absolute value T)	T < 0 °C	0.001% of span
Type K	NIST Monograph 175, IEC 584	–180 to 1372	0.0061 °C + (0.00054% of T)	T ≥ 0 °C	0.001% of span
			0.0061 °C + (0.0025% of absolute value T)	T < 0 °C	0.001% of span
Type N	NIST Monograph 175, IEC 584	–200 to 1300	0.0068 °C + (0.00036% of T)	All	0.001% of span
Type R	NIST Monograph 175, IEC 584	0 to 1768	0.016 °C	T ≥ 200 °C	0.001% of span
			0.023 °C – (0.0036% of T)	T < 200 °C	0.001% of span
Type S	NIST Monograph 175, IEC 584	0 to 1768	0.016 °C	T ≥ 200 °C	0.001% of span
			0.023 °C – (0.0036% of T)	T < 200 °C	0.001% of span
Type T	NIST Monograph 175, IEC 584	–200 to 400	0.0064 °C	T ≥ 0 °C	0.001% of span
			0.0064 °C +(0.0043% of absolute value T)	T < 0 °C	0.001% of span
DIN Type L	DIN 43710	–200 to 900	0.0054 °C + (0.00029% of T)	T ≥ 0 °C	0.001% of span
			0.0054 °C + (0.0025% of absolute value T)	T < 0 °C	0.001% of span
DIN Type U	DIN 43710	–200 to 600	0.0064 °C	T ≥ 0 °C	0.001% of span
			0.0064 °C + (0.0043% of absolute value T)	T < 0 °C	0.001% of span
Type W5Re/W26Re	ASTM E 988-96	0 to 2000	0.016 °C	T ≥ 200 °C	0.001% of span
			0.023 °C – (0.0036% of T)	T < 200 °C	0.001% of span
GOST Type L	GOST R 8.585-2001	-200 to 800	0.007 °C	T ≥ 0 °C	0.001% of span
			0.007 °C + (0.003% of absolute value T)	T < 0 °C	0.001% of span
Other input types					
Millivolt input		–10 to 100 mV	0.0005 mV	Entire sensor input range	0.001% of span
2-, 3-, 4-wire Ohm		0 to 2000 Ω	0.0084 Ω	Entire sensor input range	0.001% of span

(1) *Change in ambient is with reference to the calibration temperature of the transmitter 68 °F (20 °C) from factory.*
(2) *Ambient temperature effect specification valid over minimum temperature span of 50 °F (28 °C).*
(3) *Ambient temperature effects are tripled for temperature below –40 °C.*
(4) *Does not apply to FOUNDATION Fieldbus.*

Temperature effects example (HART devices)

When using a Pt 100 (α = 0.00385) sensor input with a 0–100 °C span at 30 °C ambient temperature:

- Digital temperature effects: 0.003 °C x (30 – 20) = 0.03 °C
- D/A effects: [0.001% of 100] x (30 – 20) = 0.01 °C
- Worst case error: Digital + D/A + Digital Temperature Effects + D/A Effects = 0.15 °C + 0.03 °C + 0.03 °C + 0.01 °C = 0.22 °C
- Total probable error: $\sqrt{0.15^2 + 0.03^2 + 0.03^2 + 0.01^2}$ = 0.16 °C

Temperature effects examples (FOUNDATION Fieldbus devices and PROFIBUS PA)

When using a Pt 100 (α = 0.00385) sensor input at 30 °C span at 30 °C ambient temperature:

- Digital temperature effects: 0.003 °C × (30 – 20) = 0.03 °C
- D/A effects: No D/A effects apply.
- Worst case error: Digital + Digital temperature effects = 0.15 °C + 0.03 °C = 0.18 °C
- Total probable error: $\sqrt{0.15^2 + 0.03^2}$ = 0.153 °C

Table 18: Transmitter Accuracy when Ordered with Option Code P8

Sensor options	Sensor reference	Input ranges		Minimum span (1)		Digital accuracy (2)		D/A accuracy(3)(4)
2-, 3-, 4-wire RTDs		°C	°F	°C	°F	°C	°F	
Pt 100 (α = 0.00385)	IEC 751	–200 to 850	–328 to 1562	10	18	± 0.10	± 0.18	±0.02% of span

(1) *No minimum or maximum span restrictions within the input ranges. Recommended minimum span will hold noise within accuracy specification with damping at zero seconds.*
(2) *Digital accuracy: Digital output can be accessed by the Field Communicator.*
(3) *Total analog accuracy is the sum of digital and D/A accuracies.*
(4) *Applies to HART/4–20 mA devices.*

Reference accuracy example (HART only)

When using a Pt 100 (α = 0.00385) sensor input with a 0 to 100 °C span: Digital Accuracy would be ±0.10 °C, D/A accuracy would be ±0.02% of 100 °C or ±0.02 °C, Total = ±0.12 °C.

Differential capability exists between any two sensor types (dual-sensor option)

For all differential configurations, the input range is X to Y where:

- X = Sensor 1 minimum – Sensor 2 maximum and
- Y = Sensor 1 maximum – Sensor 2 minimum

Product certifications

Rev 4.7

European Directive Information

A copy of the EU Declaration of Conformity can be found at the end of the Quick Start Guide. The most recent revision of the EU Declaration of Conformity can be found at Emerson.com/Rosemount.

Ordinary Location Certification

As standard, the transmitter has been examined and tested to determine that the design meets the basic electrical, mechanical, and fire protection requirements by a nationally recognized test laboratory (NRTL) as accredited by the Federal Occupational Safety and Health Administration (OSHA).

North America

The US National Electrical Code® (NEC) and the Canadian Electrical Code (CEC) permit the use of Division marked equipment in Zones and Zone marked equipment in Divisions. The markings must be suitable for the area classification, gas, and temperature class. This information is clearly defined in the respective codes.

USA

E5 USA Explosionproof, Non-Incendive, Dust-Ignitionproof

Certificate: 1091070

Standards: FM Class 3600: 2011, FM Class 3615: 2006, FM Class 3616: 2011, ANSI/ISA 60079-0: Ed. 5, UL Std. No. 50E, CAN/CSA C22.2 No. 60529-05

Markings: XP CL I, DIV 1, GP B, C, D; DIP CL II / III, DIV 1, GP E, F, G; T5(-50 °C ≤ T_a ≤ +85 °C); Type 4X; IP66; See I5 description for Non-Incendive markings.

I5 USA Intrinsic Safety and Non-Incendive

Certificate: 1091070

Standards: FM Class 3600: 2011, FM Class 3610: 2010, FM Class 3611: 2004, ANSI/ISA 60079-0: Ed. 5, UL Std. No. 60079-11: Ed. 6, UL Std. No. 50E, CAN/CSA C22.2 No. 60529-05

Markings: IS CL I/II/III, DIV I, GP A, B, C, D, E, F, G; CL I ZONE 0 AEx ia IIC; NI CL I, DIV 2, GP A, B, C, D

Special Conditions for Safe Use (X):

1. When no enclosure option is selected, the Rosemount 644 Temperature Transmitter shall be installed in a final enclosure meeting type of protection IP20 and meeting the requirements of ANSI/ISA 61010-1 and ANSI/ISA 60079-0.
2. Option code K5 is only applicable with a Rosemount enclosure. However, K5 is not valid with enclosure options S1, S2, S3, or S4.
3. An enclosure option must be selected to maintain a Type 4X rating.

4. The Rosemount 644 Transmitter optional housings may contain aluminum and is considered a potential risk of ignition by impact or friction. Care must be taken during installation and use to prevent impact and friction.

Canada

I6 Canada Intrinsic Safety and Division 2

Certificate: 1091070

Standards: CAN/CSA C22.2 No. 0-10, CSA Std C22.2 No. 25-1966, CAN/CSA-C22.2 No. 94-M91, CSA Std C22.2 No. 142-M1987, CAN/CSA-C22.2 No. 157-92, CSA Std C22.2 No. 213-M1987, C22.2 No 60529-05, CAN/CSA C22.2 No. 60079-0:11, CAN/CSA C22.2 No. 60079-11:14, CAN/CSA Std. No. 61010-1-12

Markings: [HART®] IS CL I GP A, B, C, D T4/T6; CL I, DIV 2, GP A, B, C, D
[Fieldbus/PROFIBUS®] IS CL I GP A, B, C, D T4; CL I, ZONE 0 IIC; CL I, DIV 2, GP A, B, C, D

K6 Canada Explosionproof, Dust-Ignitionproof, Intrinsic Safety and Division 2

Certificate: 1091070

Standards: CAN/CSA C22.2 No. 0-10, CSA Std C22.2 No. 25-1966, CSA Std. C22.2 No. 30-M1986, CAN/CSA-C22.2 No. 94-M91, CSA Std C22.2 No. 142-M1987, CAN/CSA-C22.2 No. 157-92, CSA Std C22.2 No. 213-M1987, C22.2 No 60529-05, CAN/CSA C22.2 No. 60079-0:11, CAN/CSA C22.2 No. 60079-11:14, CAN/CSA Std. No. 61010-1-12

Markings: CL I/II/III, DIV 1, GP B, C, D, E, F, G
See I6 description for Intrinsic Safety and Division 2 markings

Europe

E1 ATEX Flameproof

Certificate: FM12ATEX0065X

Standards: EN 60079-0: 2012+A11:2013, EN 60079-1: 2014, EN 60529:1991 +A1:2000+A2:2013

Markings: Ⓔx II 2 G Ex db IIC T6...T1 Gb, T6(–50 °C ≤ T_a ≤ +40 °C), T5...T1(–50 °C ≤ T_a ≤ +60 °C)

See Table 35 for process temperatures.

Special Conditions for Safe Use (X):

1. See certificate for ambient temperature range.
2. The non-metallic label may store an electrostatic charge and become a source of ignition in Group III environments.
3. Guard the LCD display cover against impact energies greater than 4 joules.
4. Flameproof joints are not intended for repair.
5. A suitable certified Ex d or Ex tb enclosure is required to be connected to temperature probes with Enclosure option “N”.
6. Care shall be taken by the end user to ensure that the external surface temperature on the equipment and the neck of DIN Style Sensor probe does not exceed 130 °C.
7. Non-Standard Paint options may cause risk from electrostatic discharge. Avoid installations that cause electrostatic build-up on painted surfaces, and only clean the painted surfaces with a damp cloth. If paint is ordered through a special option code, contact the manufacturer for more information.

I1 ATEX Intrinsic Safety

Certificate:	[Headmount HART®]: Baseefa12ATEX0101X [Headmount Fieldbus/PROFIBUS®]: Baseefa03ATEX0499X [Railmount HART]: BAS00ATEX1033X
Standards:	EN IEC 60079-0: 2018, EN 60079-11: 2012
Markings:	[HART]: Ⓔx II 1 G Ex ia IIC T6...T4 Ga [Fieldbus/PROFIBUS]: Ⓔx II 1 G Ex ia IIC T4 Ga

See Table 39 for entity parameters and temperature classifications.

Special Conditions for Safe Use (X):

1. The equipment must be installed in an enclosure which affords it a degree of protection of at least IP20 in accordance with the requirements of IEC 60529. Non-metallic enclosures must have a surface resistance of less than 1 GΩ; light alloy or zirconium enclosures must be protected from impact and friction when installed in a Zone 0 environment.
2. When fitted with the Transient Protector Assembly, the equipment is not capable of withstanding the 500 V test as defined in Clause 6.3.13 of EN 60079-11:2012. This must be taken into account during installation.

N1 ATEX Type n – with enclosure

Certificate:	BAS00ATEX3145
Standards:	EN 60079-0: 2012+A11: 2013, EN 60079-15: 2010
Markings:	Ⓔx II 3 G Ex nA IIC T5 Gc (–40 °C ≤ T_a ≤ +70 °C)

NC ATEX Type n – without enclosure

Certificate:	[Headmount Fieldbus/PROFIBUS®, Railmount HART®]: Baseefa13ATEX0093X [Headmount HART]: Baseefa12ATEX0102U
Standards:	EN IEC 60079-0: 2018, EN 60079-15: 2010
Markings:	[Headmount Fieldbus/PROFIBUS, Railmount HART]: Ⓔx II 3 G Ex nA IIC T5 Gc (–40 °C ≤ T_a ≤ +70 °C) [Headmount HART]: Ⓔx II 3 G Ex nA IIC T6...T5 Gc; T6(–60 °C ≤ T_a ≤ +40 °C); T5(–60 °C ≤ T_a ≤ +85 °C)

Special Conditions for Safe Use (X):

1. The Rosemount 644 Temperature Transmitter must be installed in a suitably certified enclosure such that it is afforded a degree of protection of at least IP54 in accordance with IEC 60529 and EN 60079-15.
2. When fitted with the Transient Protector Assembly, the equipment is not capable of withstanding the 500 V test as defined in Clause 6.5 of EN 60079-15: 2010. This must be taken into account during installation.

ND ATEX Dust

Certificate: FM12ATEX0065X

Standards: EN 60079-0: 2012+A11:2013, EN 60079-31: 2014, EN 60529:1991 +A1:2000

Markings: Ⓔx II 2 D Ex tb IIIC T130 °C Db, (–40 °C ≤ T_a ≤ +70 °C); IP66
See Table 35 for process temperatures.

Special Conditions for Safe Use (X):

1. See certificate for ambient temperature range.
2. The non-metallic label may store an electrostatic charge and become a source of ignition in Group III environments.
3. Guard the LCD display cover against impact energies greater than 4 joules.
4. Flameproof joints are not intended for repair.
5. A suitable certified Ex d or Ex tb enclosure is required to be connected to temperature probes with Enclosure option "N".
6. Care shall be taken by the end user to ensure that the external surface temperature on the equipment and the neck of DIN Style Sensor probe does not exceed 130 °C.
7. Non-Standard Paint options may cause risk from electrostatic discharge. Avoid installations that cause electrostatic build-up on painted surfaces, and only clean the painted surfaces with a damp cloth. If paint is ordered through a special option code, contact the manufacturer for more information

International

E7 IECEx Flameproof

Certificate: IECEx FMG 12.0022X

Standards: IEC 60079-0: 2011, IEC 60079-1: 2014

Markings: Ex db IIC T6...T1 Gb, T6(–50 °C ≤ T_a ≤ +40 °C), T5...T1(–50 °C ≤ T_a ≤ +60 °C)

See Table 35 for process temperatures.

Special Conditions for Safe Use (X):

1. See certificate for ambient temperature range.
2. The non-metallic label may store an electrostatic charge and become a source of ignition in Group III environments.
3. Guard the LCD display cover against impact energies greater than 4 joules.
4. Flameproof joints are not intended for repair.
5. A suitable certified Ex d or Ex tb enclosure is required to be connected to temperature probes with Enclosure option “N”.
6. Care shall be taken by the end user to ensure that the external surface temperature on the equipment and the neck of DIN Style Sensor probe does not exceed 130 °C.
7. Non-Standard Paint options may cause risk from electrostatic discharge. Avoid installations that cause electrostatic build-up on painted surfaces, and only clean the painted surfaces with a damp cloth. If paint is ordered through a special option code, contact the manufacturer for more information.

I7 IECEx Intrinsic Safety

Certificate: [Headmount HART®]: IECEx BAS 12.0069X
[Headmount Fieldbus/PROFIBUS®, Railmount HART]: IECEx BAS 07.0053X

Standards: IEC 60079-0: 2017, IEC 60079-11: 2011

Markings: Ex ia IIC T6...T4 Ga

See Table 39 for Entity Parameters and Temperature Classifications.

Special Conditions for Safe Use (X):

1. The equipment must be installed in an enclosure which affords it a degree of protection of at least IP20 in accordance with the requirements of IEC 60529. Non-metallic enclosures must have a surface resistance of less than 1G Ω; light alloy or zirconium enclosures must be protected from impact and friction when installed in a Zone 0 environment.
2. When fitted with the Transient Protector Assembly, the equipment is not capable of withstanding the 500 V test as defined in Clause 6.3.13 of IEC 60079-11:2011. This must be taken into account during installation.

N7 IECEx Type n – with enclosure

Certificate: IECEx BAS 07.0055

Standards: IEC 60079-0: 2011, IEC 60079-15: 2010

Markings: Ex nA IIC T5 Gc (–40 °C ≤ T_a ≤ +70 °C)

NG IECEx Type n – without enclosure

Certificate: [Headmount Fieldbus/PROFIBUS®, Railmount HART®]: IECEx BAS 13.0053X
[Headmount HART]: IECEx BAS 12.0070U

Standards: IEC 60079-0: 2017, IEC 60079-15: 2010

Markings: [Headmount Fieldbus/PROFIBUS, Railmount HART]: Ex nA IIC T5 Gc (–40 °C ≤ T_a ≤ +70 °C)
[Headmount HART]: Ex nA IIC T6...T5 Gc; T6(–60 °C ≤ T_a ≤ +40 °C); T5(–60 °C ≤ T_a ≤ +85 °C)

Special Conditions for Safe Use (X):

1. The Rosemount 644 Temperature Transmitter must be installed in a suitably certified enclosure such that it is afforded a degree of protection of at least IP54 in accordance with IEC 60529 and IEC 60079-15.
2. When fitted with the Transient Protector Assembly, the equipment is not capable of withstanding the 500 V test. This must be taken into account during installation.

NK IECEx Dust

Certificate: IECEx FMG 12.0022X

Standards: IEC 60079-0: 2011, IEC 60079-31: 2013

Markings: Ex tb IIIC T130 °C Db, (–40 °C ≤ T_a ≤ +70 °C); IP66

See Table 35 for process temperatures

Special Conditions for Safe Use (X):

1. See certificate for ambient temperature range.
2. The non-metallic label may store an electrostatic charge and become a source of ignition in Group III environments.
3. Guard the LCD display cover against impact energies greater than 4 joules.
4. Flameproof joints are not intended for repair.
5. A suitable certified Ex d or Ex tb enclosure is required to be connected to temperature probes with Enclosure option “N”.

6. Care shall be taken by the end user to ensure that the external surface temperature on the equipment and the neck of DIN Style Sensor probe does not exceed 130 °C.
7. Non-Standard Paint options may cause risk from electrostatic discharge. Avoid installations that cause electrostatic build-up on painted surfaces, and only clean the painted surfaces with a damp cloth. If paint is ordered through a special option code, contact the manufacturer for more information.

Brazil

E2 INMETRO Flameproof and Dust

Certificate: UL-BR 13.0535X

Standards: ABNT NBR IEC 60079-0:2013, ABNT NBR IEC 60079-1:2016, ABNT NBR IEC 60079-31:2014

Markings: Ex db IIC T6...T1 Gb; T6...T1: (–50 °C ≤ T_a ≤ +40 °C), T5...T1: (–50 °C ≤ T_a ≤ +60 °C)
Ex tb IIIC T130 °C; IP66; (–40 °C ≤ T_a ≤ +70 °C)

Special Conditions for Safe Use (X):

1. See product description for ambient temperature limits and process temperature limits.
2. The non-metallic label may store an electrostatic charge and become a source of ignition in Group III environments.
3. Guard the LCD display cover against impact energies greater than 4 joules.
4. Consult the manufacturer if dimensional information on the flameproof joints is necessary.

I2 INMETRO Intrinsic Safety

Certificate: [Fieldbus]: UL-BR 15.0264X [HART®]: UL-BR 14.0670X

Standards: ABNT NBR IEC 60079-0:2013, ABNT NBR IEC 60079-11:2013

Markings: [Fieldbus]: Ex ia IIC T* Ga (–60 °C ≤ T_a ≤ +* * °C) [HART]: Ex ia IIC T* Ga (–60 °C ≤ T_a ≤ +* * °C)

See Table 39 for Entity Parameters and Temperature Classifications.

Special Conditions for Safe Use (X):

1. The apparatus must be installed in an enclosure which affords it a degree of protection of at least IP20.
2. Non-metallic enclosures must have a surface resistance of less than 1 GΩ; light alloy or zirconium enclosures must be protected from impact and friction when installed in a zone 0 environment.
3. When fitted with the Transient Protector Assembly, the equipment is not capable of withstanding the 500 V test as defined on ABNT NBR IEC 60079-11. This must be taken into account during installation.

China

E3 China Flameproof

Certificate: GYJ21.1118X

Standards: GB3836.1-2010, GB3836.2-2010, GB12476.1-2013, GB12476.5-2013

Markings: Ex d IIC T6...T1; Ex tD A21 T130 °C; IP66

产品安全使用特定条件

产品防爆合格证后缀“X”代表产品安全使用有特定条件：

1. 涉及隔爆接合面的维修须联系产品制造商。
2. 产品铭牌材质为非金属，使用时须防止产生静电火花，只能用湿布清理。
3. 产品使用环境温度与温度组别的关系为：

防爆标志	温度组别	环境温度
Ex d IIC T6~T1 Gb	T6 ~ T1	–50 °C ≤ T_a ≤ +40 °C
	T5 ~ T1	–50 °C ≤ T_a ≤ +60 °C
Ex Td A21 IP66 T130 °C	N/A	–40 °C ≤ T_a ≤ +70 °C

4. 产品外壳设有接地端子，用户在安装使用时应可靠接地。
5. 现场安装时，电缆引入口须选用国家指定的防爆检验机构按检验认可、具有 Ex dIIC, Ex tD A21 IP66 防爆等级的电缆引入装置或堵封件，冗余电缆引入口须用堵封件有效密封。
6. 用于爆炸性气体环境中，现场安装、使用和维护必须严格遵守“断电后开盖！”的警告语。用于爆炸性粉尘环境中，现场安装、使用、和维护必须严格遵守“爆炸性粉尘场所严禁开盖！”的警告语。
7. 用于爆炸性粉尘环境中，产品外壳表面须保持清洁，以防粉尘堆积，单严禁用压缩空气吹扫。
8. 产品的安装、使用和维护应同时遵守产品使用说明书、GB3836.13-2013“爆炸性环境 第 13 部分：设备的修理、检修、修复和改造”、GB3836.15-2000“爆炸性气体环境用电气设备 第 15 部分：危险场所电气安装（煤矿除外）”、GB3836.16-2006“爆炸性气体环境用电气设备 第 16 部分：电气装置的检查和维护（煤矿除外）”和 GB50257-2014“电气装置安装工程爆炸和火灾危险环境电力装置施工及验收规范”和 GB15577-2007“粉尘防爆安全规程”、GB12476.2-2010 “可燃性粉尘环境用电气设备 第 2 部分 选型和安装”的有关规定。

I3 China Intrinsic Safety

Certificate: GYJ21.1119X

Standards: GB3836.1-2010, GB3836.4-2010, GB3836.20-2010

Markings: Ex ia IIC T4~T6 Ga

产品安全使用特殊条件

防爆合格证号后缀“X”代表产品安全使用有特定条件：

1. 温度变送器须安装于外壳防护等级不低于国家标准 GB/T4208-2017 规定的 IP20 的壳体中，方可用于爆炸性危险场所，金属壳体须符合国家标准 GB3836.1-2010 第 8 条的规定，非金属壳体须符合 GB3836.1-2010 第 7.4 条的规定。
2. 非金属外壳表面电阻必须小于 1GΩ，轻金属或者锆外壳在安装时必须防止冲击和摩擦。
3. 当 Transmitter Type 为 F、D 时，产品外壳含有轻金属，用于 0 区时需注意防止由于冲击或摩擦产生的点燃危险。
4. 产品选用瞬态保护端子板（选项代码为 T1）时，此设备不能承受 GB3836.4-2010 标准中第 6.3.12 条规定的 500V 交流有效值试验电压的介电强度试验。

产品使用注意事项

1. 产品环境温度为：
   当 Options 不选择 Enhanced Performance 时

输出代码	最大输出功率（**W**）	温度组别	环境温度
A	0.67	T6	–60 °C ≤ T_a ≤ +40 °C

输出代码	最大输出功率（W）	温度组别	环境温度
	0.67	T5	–60 °C ≤ T_a ≤ +50 °C
	1	T5	–60 °C ≤ T_a ≤ +40 °C
	1	T4	–60 °C ≤ T_a ≤ +80 °C
F 或 W	1.3	T4	–50 °C ≤ T_a ≤ +60 °C
	5.32	T4	–50 °C ≤ T_a ≤ +60 °C

当 Options 选择 Enhanced Performance 时

最大输出功率（W）	温度组别	环境温度
0.67	T6	–60 °C ≤ T_a ≤ +40 °C
0.67	T5	–60 °C ≤ T_a ≤ +50 °C
0.80	T5	–60 °C ≤ T_a ≤ +40 °C
0.80	T4	–60 °C ≤ T_a ≤ +80 °C

2. 参数：
当 Options 不选择 Enhanced Performance 时
输入端(+ , -)

输出代码	最高输入电压 U_i（V）	最大输入电流 $I_{i\,(mA)}$	最大输入功率 P_i（W）	最大内部等效参数	
				C_i (nF)	L_i (mH)
A	30	200	0.67/1	10	0
F 或 W	30	300	1.3	2.1	0
F 或 W(FISCO)	17.5	380	5.32	2.1	0

传感器端（1,2,3,4）

输出代码	最高输出电压 U_o (V)	最大输 出电流 I_o (mA)	最大输 出功率 P_o (W)	最大内部等效参数	
				C_o (nF)	L_o (mH)
A	13.6	80	0.08	75	0
F,W	13.9	23	0.079	7.7	0

当 Options 选择 Enhanced Performance 时
输入端(+ , -)

最高输入电压 U_i (V)	最大输入电流 I_i (mA)	最大输入功率 P_i (W)	最大内部等效参数	
			C_i (nF)	L_i (mH)
30	150 (T_a ≤ +80 °C)	0.67/0.8	3.3	0
	170 (T_a ≤ +70 °C)			
	190 (T_a ≤ +60 °C)			

传感器端（1,2,3,4）

最高输 出电压 U_o (V)	最大输 出电流 I_o (mA)	最大输 出功率 P_o (W)	组别	最大内部等效参数	
				C_o (nF)	L_o (mH)
13.6	80	0.08	IIC	0.816	5.79
			IIB	5.196	23.4
			IIA	18.596	48.06

注：本案电气参数符合 GB3836.19-2010 对 FISCO 现场仪表的参数要求。

3. 该产品必须与已通过防爆认证的关联设备配套共同组成本安防爆系统方可使用于爆炸性气体环境。其系统接线必须同时遵守本产品和所配关联设备的使用说明书要求，接线端子不得接错。
4. 用户不得自行更换该产品的零部件，应会同产品制造商共同解决运行中出现的故障，以杜绝损坏现象的发生。
5. 产品的安装、使用和维护应同时遵守产品使用说明书、GB3836.13-2013“爆炸性环境 第 13 部分：设备的修理、检修、修复和改造”、GB/T3836.15-2017“爆炸性环境 第 15 部分：电气装置的设计，选型和安装”、GB/T3836.16-2017“爆炸性环境 第 16 部分：电气装置的检查和维护”、GB/T3836.18-2017“爆炸性环境 第 18 部分：本质安全电气系统”和 GB50257-2014“电气装置安装工程爆炸和火灾危险环境电力装置施工及验收规范”的有关规定。

N3 China Type n

Certificate: GYJ20.1544

Standards: GB3836.1-2010, GB3836.8-2014

Markings: Ex nA IIC T5/T6 Gc

产品安全使用特殊条件

1. 产品温度组别和使用环境温度范围之间的关系为：
   当 Options 不选择 Enhanced Performance 时：

温度组别	环境温度
T5	$-40\,°C \le T_a \le +70\,°C$

当 Options 选择 Enhanced Performance 时：

温度组别	环境温度
T6	$-60\,°C \le T_a \le +40\,°C$
T5	$-60\,°C \le T_a \le +85\,°C$

2. 最高工作电压：45Vdc
3. 现场安装时，电缆引入口须选用经国家指定的防爆检验机构检验认可、具有 Ex e IIC Gb 防爆等级的电缆引入装置或堵封件，冗余电缆引入口须用封堵件有效密封。电缆引入装置或封堵件的安装使用必须遵守其使用说明书的要求并保证外壳防护等级达到 IP54（符合 GB/T4208-2017 标准要求）以上。
4. 用户不得自行更换该产品的零部件，应会同产品制造商共同解决运行中出现的故障，以杜绝损坏现象的发生。
5. 产品的安装、使用和维护应同时遵守产品使用说明书、GB3836.13-2013“爆炸性环境 第 13 部分：设备的修理、检修、修复和改造”、GB/T3836.15-2017“爆炸性环境 第 15 部分：电气装置的设计、选型和安装”、GB/T3836.16-2017“爆炸性环境 第 16 部分：电气装置的检查和维护”和 GB50257-2014“电气装置安装工程爆炸和火灾危险环境电力装置施工及验收规范”的有关规定。

EAC - Belarus, Kazakhstan, Russia

EM Technical Regulation Customs Union TR CU 012/2011 (EAC) Flameproof

Standards: GOST 31610.0-2014, GOST IEC 60079-1-2011

Markings: 1Ex d IIC T6...T1 Gb X, T6 (-55 °C ≤ T_a ≤ +40 °C), T5...T1(-55 °C ≤ T_a≤ +60 °C);

See Table 35 for process temperatures.

Special Conditions for Safe Use (X):

1. See certificate TR CU 012/2011 for ambient temperature range.
2. Guard the LCD display cover against impact energies greater than 4 joules.
3. Flameproof joints are not intended for repair.
4. Non-standard paint options may cause risk from electrostatic discharge. Avoid installations that cause electrostatic build-up on painted surfaces, and only clean the painted surfaces with a damp cloth. If paint is ordered through a special code, contact the manufacturer for more information.

IM Technical Regulation Customs Union TR CU 012/2011 (EAC) Intrinsic Safety

Standards: GOST 31610.0-2014, GOST 31610.11-2014

Markings: [HART®]: 0Ex ia IIC T6...T4 Ga X; [Fieldbus, FISCO, PROFIBUS® PA]: 0Ex ia IIC T4 Ga X

See Table 39 for Entity Parameters and Temperature Classifications.

Special Conditions for Safe Use (X):

1. The equipment must be installed in an enclosure which affords it a degree of protection of at least IP20 in accordance with the requirements of GOST 14254-96. Non-metallic enclosures must have a surface resistance of less than 1 Ω; light alloy or zirconium enclosures must be protected from impact and friction when installed in a Zone 0 environment.
2. When fitted with the Transient Protector Assembly, the equipment is not capable of withstanding the 500 V test as defined in GOST 31610.11-2014. This must be taken into account during installation.
3. See certificate TR CU 012/2011 for ambient temperature range.

KM Technical Regulation Customs Union TR CU 012/2011 (EAC) Flameproof, Intrinsic Safety, and Dust-Ignitionproof

Standards: GOST 31610.0-2014, GOST IEC 60079-1-2011, GOST 31610.11-2014, GOST R IEC 60079-31-2010

Markings: Ex tb IIIC T130 °C Db X (-55 °C ≤ T_a ≤ +70 °C); IP66

See Table 35 for process temperatures.

See EM for Flameproof Markings and see IM for Intrinsic Safety Markings.

Special Conditions for Safe Use (X):

1. The non-metallic label may store an electrostatic charge and become a source of ignition in Group III environments. Label must be cleaned by the damp cloth with antistatic to avoid store an electrostatic discharge.
2. Guard the LCD display cover against impact energies greater than 4 joules.

See EM for Flameproof Specific Conditions of Use and see IM for Intrinsic Safety Specific Conditions of Use.

Japan

E4 Japan Flameproof

Certificate: CML 17JPN1316X

Markings: Ex d IIC T6...T1 Gb; T6 (-50 °C < T_a < +40 °C); T5...T1(-50 °C ≤ T_a≤ 60 °C)

Special Conditions for Safe Use:

1. Flameproof joints are not intended for repair.
2. Models with LCD display cover shall have the display cover protected from impact energies greater than 4 Joules.
3. For Models 65 and 185, the user shall ensure the external surface temperature of the equipment and the neck of the DIN Style probe does not exceed 130 °C.
4. Non-standard paint options may cause risk from electrostatic discharge.
5. The wiring used shall be suitable for temperatures over 80 °C.

I4 Japan Intrinsic Safety

Certificate: CML 18JPN2118X

Standards: JNIOSH-TR-46-1, JNIOSH-TR-46-6

Markings: [Fieldbus] Ex ia IIC T4 Ga (–60 °C ≤ T_a ≤ +60 °C);

Special Conditions for Safe Use (X):

1. The apparatus must be installed in an enclosure which affords it a degree of protection of at least IP20.
2. Non-metallic enclosures must have a surface resistance of less than 1 G Ω; light alloy or zirconium enclosures must be protected from impact and friction when installed in a zone 0 environment.

Korea

EP Korea Flameproof and Dust-Ignitionproof

Certificate: 13-KB4BO-0559X

Markings: Ex db IIC T6...T1 Gb; Ex tb IIIC T130 °C Db

Special Condition for Safe Use (X):

See certificate for special conditions for safe use.

IP Korea Intrnsic Safety

Certificate: 13-KB4BO-0531X

Markings: Ex ia IIC T6...T4

Special Condition for Safe Use (X):

See certificate for special conditions for safe use.

Combinations

K1	Combination of E1, I1, N1, and ND
K2	Combination of E2 and I2
K5	Combination of E5 and I5
K7	Combination of E7, I7, N7, and NK
KA	Combination of K6, E1, and I1
KB	Combination of K5 and K6
KC	Combination of I5 and I6
KD	Combination of E5, I5, K6, E1, and I1
KP	Combination of EP and IP

Additional certifications

SBS American Bureau of Shipping (ABS) Type Approval

Certificate: 16-HS1553094-PDA

SBV Bureau Veritas (BV) Type Approval

Certificate: 26325 BV

Requirements: Bureau Veritas Rules for the Classification of Steel Ships

Application: Class notations: AUT-UMS, AUT-CCS, AUT-PORT and AUT-IMS

SDN Det Norske Veritas (DNV) Type Approval

Certificate: TAA00000K8

Application: Location Classes:Temperature: D; Humidity: B; Vibration: A; EMC: B; Enclosure B/IP66: A, C/IP66: SST

SLL Lloyds Register (LR) Type Approval

Certificate: 11/60002

Application: For use in environmental categories ENV1, ENV2, ENV3, and ENV5.

Specification tables

Table 35: Process Temperature Limits

Sensor only (no transmitter installed)	Process temperature [°C]						
	Gas						Dust
	T6	T5	T4	T3	T2	T1	T130 °C
Any extension length	85 °C (185 °F)	100 °C (212 °F)	135 °C (275 °F)	200 °C (392 °F)	300 °C (572 °F)	450 °C (842 °F)	130 °C (266 °F)

Table 36: Process Temperature Limits without LCD Display Cover

Transmitter	Process temperature [°C]						
	Gas						Dust
	T6	T5	T4	T3	T2	T1	T130 °C
No extension	131 °F (55 °C)	158 °F (70 °C)	212 °F (100 °C)	338 °F (170 °C)	536 °F (280 °C)	824 °F (440 °C)	212 °F (100 °C)
3-in. extension	131 °F (55 °C)	158 °F (70 °C)	230 °F (110 °C)	374 °F (190 °C)	572 °F (300 °C)	842 °F (450 °C)	230 °F (110 °C)
6-in. extension	140 °F (60 °C)	158 °F (70 °C)	248 °F (120 °C)	392 °F (200 °C)	572 °F (300 °C)	842 °F (450 °C)	230 °F (110 °C)
9-in. extension	149 °F (65 °C)	167 °F (75 °C)	266 °F (130 °C)	392 °F (200 °C)	572 °F (300 °C)	842 °F (450 °C)	248 °F (120 °C)

Adhering to the process temperature limitation of Table 37 will ensure that the service temperature limitations of the LCD cover are not exceeded. Process temperatures may exceed the limits defined in Table 37 if the Temperature of the LCD cover is verified to not exceed the service temperatures in Table 38 and the process temperatures do not exceed the values specified in Table 36.

Table 37: Process Temperature Limits with LCD Display Cover

Transmitter with LCD display cover	Process temperature [°C]			
	Gas			Dust
	T6	T5	T4...T1	T130 °C
No extension	131 °F (55 °C)	158 °F (70 °C)	203 °F (95 °C)	203 °F (95 °C)
3-in. extension	131 °F (55 °C)	158 °F (70 °C)	212 °F (100 °C)	212 °F (100 °C)
6-in. extension	140 °F (60 °C)	158 °F (70 °C)	212 °F (100 °C)	212 °F (100 °C)
9-in. extension	149 °F (65 °C)	167 °F (75 °C)	230 °F (110 °C)	110 °C (230 °F)

Table 38: Service Temperature Limits

Transmitter with LCD display cover	Service temperature [°C]			
	Gas			Dust
	T6	T5	T4...T1	T130 °C
No extension	149 °F (65 °C)	167 °F (75 °C)	203 °F (95 °C)	203 °F (95 °C)

Table 39: Entity Parameters

	Fieldbus/PROFIBUS® [FISCO]	HART®	HART (Enhanced)
U_i (V)	30 [17.5]	30	30
I_i (mA)	300 [380]	200	150 for $T_a \leq 80$ °C 170 for $T_a \leq 70$ °C 190 for $T_a \leq 60$ °C

Table 39: Entity Parameters *(continued)*

	Fieldbus/PROFIBUS® [FISCO]	**HART®**	**HART (Enhanced)**
P_i (W)	1.3 at T4 (–50 °C ≤ T_a ≤ +60 °C) [5.32 at T4 (–50 °C ≤ T_a ≤ +60 °C)]	.67 at T6(–60 °C ≤ T_a ≤ +40 °C) .67 at T5(–60 °C ≤ T_a ≤ +50 °C) 1.0 at T5(–60 °C ≤ T_a ≤ +40 °C) 1.0 at T4(–60 °C ≤ T_a ≤ +80 °C)	.67 at T6(–60 °C ≤ T_a ≤ +40 °C) .67 at T5(–60 °C ≤ T_a ≤ +50 °C) .80 at T5(–60 °C ≤ T_a ≤ +40 °C) .80 at T4(–60 °C ≤ T_a ≤ +80 °C)
C_i (nF)	2.1	10	3.3
L_i (mH)	0	0	0

Product Data Sheet
00813-0500-2654, Rev HA
May 2021

Rosemount™ 214C Temperature Sensors

Primary product benefits

- High accuracy resistance temperature detectors (RTD) and various thermocouple types offered in a variety of element configurations
- Calibration capabilities for increased measurement accuracy for RTDs

ROSEMOUNT™

EMERSON™

Rosemount 214C Sensor

The Rosemount 214C Sensors are designed to provide flexible and reliable temperature measurements in process monitoring and control environments.

Features include:

- Temperature ranges of –321 to 1112 °F (–196 to 600 °C) for RTDs and –321 to 2192 °F (–196 to 1200 °C) for thermocouples
- Industry-standard sensor types: PT100 RTDs; thermocouple Type J, Type K, and Type T
- Spring-loaded and compact spring-loaded sensor mounting styles
- Hazardous location product approvals and certification
- Calibration services to give insight to sensor performance
- Calibration certificate to accompany sensor

Specification and selection of product materials, options, or components must be made by the purchaser of the equipment.

Figure 1: Model Number Ordering Example

Model				Sensor type		Sheath material		Sensor accuracy		Number of elements		Units	Sensor insertion length				Sensor mounting style		Options
2	1	4	C	R	W	S	M	A	1	S	4	E	0	1	5	0	S	L	WR5, ES...
1	2	3	4	5	6	7	8	9	10	11	12	13	14	15	16	17	18	19	XXXXX

The numbers below the model string example in Figure 1 correlate to the character place numbers in the ordering table.

Ensure sensor fits thermowell

Rosemount 114C Head length (H) + Immersion length (U) = Rosemount 214C Sensor insertion length (L).

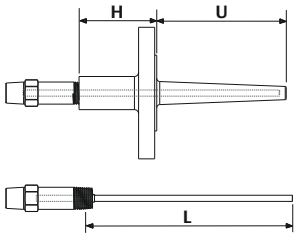

RTD ordering information

Table 1: Rosemount 214C RTD Quick Order Table

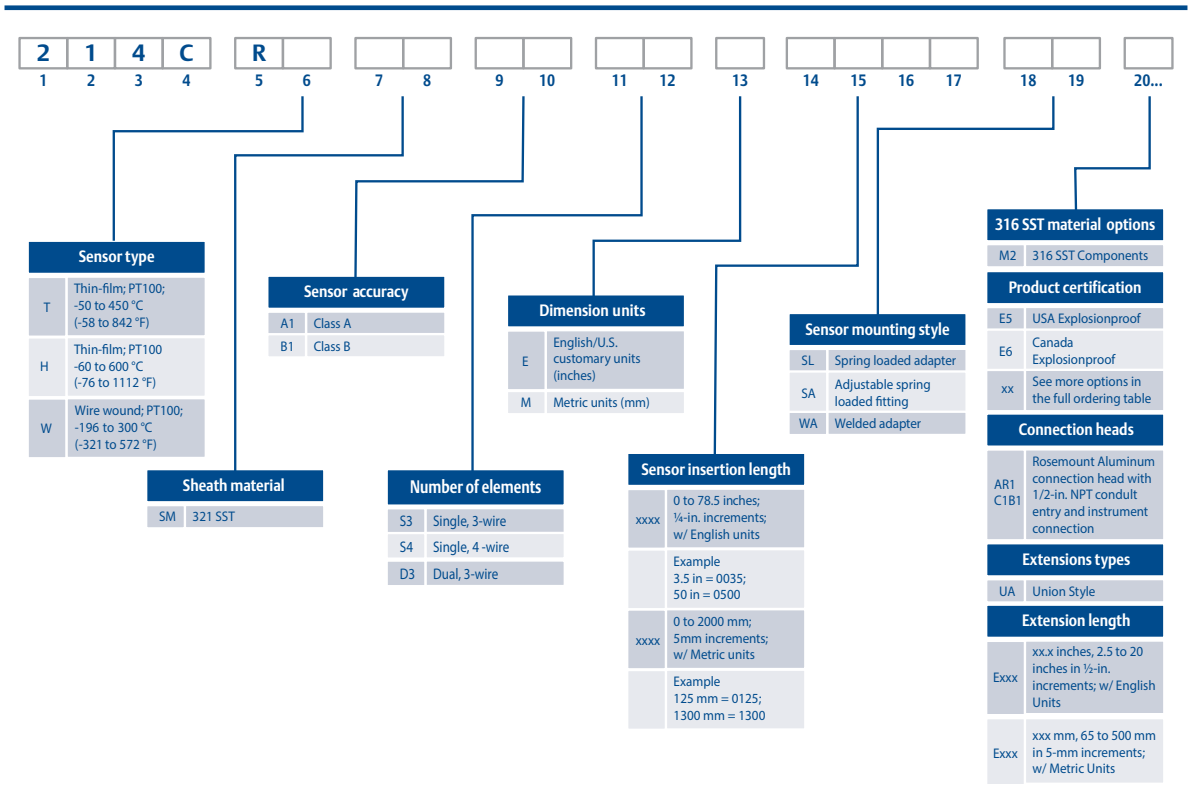

Online product configurator

Many products are configurable online using our Product Configurator. Select the **Configure** button or visit our website to start. With this tool's built-in logic and continuous validation, you can configure your products more quickly and accurately.

Specifications and options

See the Specifications and options section for more details on each configuration. Specification and selection of product materials, options, or components must be made by the purchaser of the equipment. See the Material selection section for more information.

Optimizing lead time

The starred offerings (★) represent the most common options and should be selected for best delivery. The non-starred offerings are subject to additional delivery lead time.

Required model components

Model

Place #s 1-4		Description
★	214C	Temperature sensor core base model (made with standard outside diameter of ¼-in. [6 mm])

Sensor type

Place #s 5-6		Description	Details	Ref. page
★	RT	RTD, PT100; α = –58 to 842 °F (0.00385; –50 to 450 °C)	Thin-film element is better in vibration and physical shock	page 37
★	RW	RTD, PT100; α = –321 to 572 °F (0.00385; –196 to 300 °C)	Wire wound element is better for low temperature applications	page 37
★	RH	RTD, PT100; α = –76 to 1112 °F (0.00385; –60 to 600 °C)	High temperature thin-film element is better in vibration and physical shock	page 37

Note
The sensor type temperature range is the full operating range of the sensor type and is not specific to the tolerance class or interchangeability.

Sensor sheath material

Place #s 7-8		Description	Details	Ref. page
★	SM	321 SST	Maximum operating temperature limit of 1500 °F (816 °C)	page 40

Sensor accuracy

Place #s 9-10		Description	Details	Image	Ref. page
★	A1	Class A per IEC 60751	Class A accuracy is available with wire-wound element Option Code: RW over -58 to 572 °F (–50 to 300 °C) and thin film element Option Code: RT over 32 to 572 °F (0 to 300 °C)	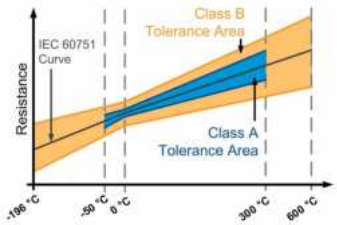	page 40
★	B1	Class B per IEC 60751			page 40

Number of elements

Place #s 11-12		Description	Details	Image	Ref. page
★	S3	Single, 3-wire	Good measurement results	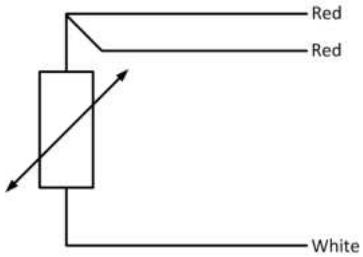	page 41
★	S4	Single, 4-wire	Excellent measurement results	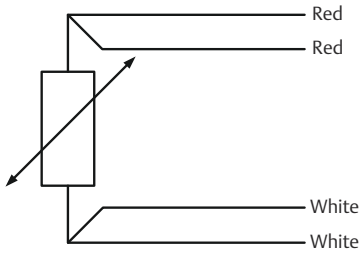	page 41
★	D3	Dual, 3-wire	Added measurement redundancy	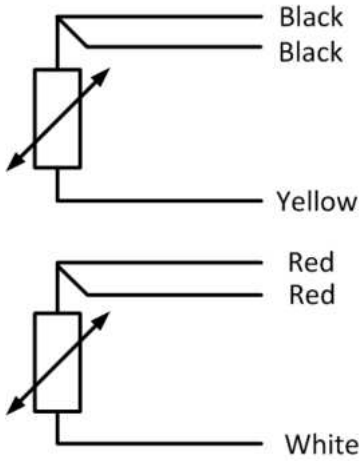	page 41

Dimension units

Place # 13		Description	Details	Ref. page
★	E	English/U.S. customary units (inches)	Only applies to lengths	page 43
★	M	Metric units (mm)	Only applies to lengths	page 43

Sensor insertion length

Place #s 14-17		Description	Ref. page
★	xxxx	xxx.x inches, 0 to 78.5 inches in ¼-in. increments (when ordered with Dimension units code E)	page 43
		Example of a 6.25-in. length where the second decimal is dropped off: 0062	
★	xxxx	xxxx mm, 0 to 2000 mm in 5 mm increments (when ordered with Dimension units code M)	page 43
		Example of a 50 mm length: 0050	

Sensor mounting style

Welded adapters are built several millimeters shorter than specified length to ensure that the sheath will not be damaged by contact with the bottom of a thermowell if overtightened. Conversely, Spring-loaded adapters are built several millimeters longer than specified to ensure contact with the bottom of a thermowell.

Place #s 18-19		Description	Details	Image	Ref. page
★	SL	Spring-loaded adapter	Ensures sensor contact with thermowell tip		page 45
★	SC	Compact Spring-loaded adapter	Non-explosionproof adapter that is 1.17-in. (29.72 mm) shorter than standard Spring-loaded adapter (currently not available with Division 2/Zone 2 approvals)	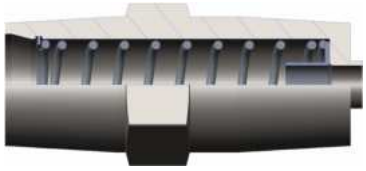	page 46
★	SW	Spring-loaded adapter with thermowell contact indication	Spring-loaded adapter with a small opening on the side of the adapter for visual indication of sensor contact with the tip of a thermowell		page 46
★	WA	Welded adapter	Welded joint between sensor capsule and adapter allows for direct immersion of sensor into the process. If thermowell is used, this welded joint acts as a secondary process seal.		page 47
★	WC	Compact-welded adapter	Non-explosionproof adapter that is 1.17-in. (29.72 mm) shorter than standard welded adapter (currently not available with Division 2/Zone 2 approvals)		page 47
★	SA	Adjustable Spring-loaded fitting	Adjustable fitting that allows for installation along sensor capsule body. The Spring-loaded fitting ensures sensor contact to thermowell tip.		page 47

Place #s 18-19		Description	Details	Image	Ref. page
★	CA	Compression fitting ⅛-in. NPT	Adjustable fitting that allows for installation along the sensor capsule body. (100 psig maximum) (Default compression fitting material is stainless steel).	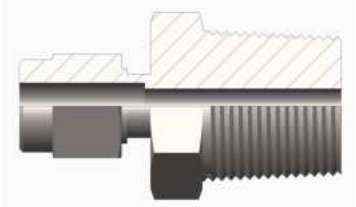	page 48
★	CB	Compression fitting ¼-in. NPT			
★	CC	Compression fitting ½-in. NPT			
★	CD	Compression fitting ¾-in. NPT			
★	DF	DIN mounting plate with flying leads	Allows for assembly with headmount temperature transmitters and designed for easy mounting and replacement.		page 48
★	DT	DIN mounting plate with terminal block	Allows for remote mounting assembly and designed for easy mounting and replacement.	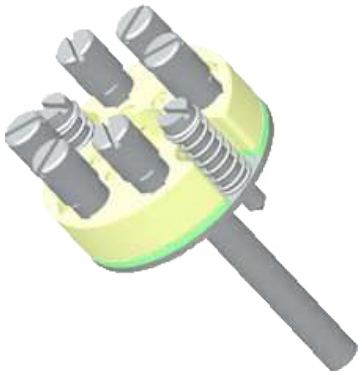	page 48
★	SO	Sensor only	Sensor capsule without any fittings or adapters for mounting		page 48

Additional options

316SST material options

Code		Description	Details	Image	Ref. page
★	M1	316 SST wire on tag	Changes out the original 304SST wire on tag to a corrosion-resistant 316SST wire on tag		page 48
★	M2	316 SST components	Replaces various components with corrosion-resistant 316SST material (review reference page for affected components)		page 48

Vibration resistance

Code		Description	Ref. page
★	VR1	10 g vibration resistance	page 76

Product certification

Code		Description	Ref. page
★	E1	ATEX Flameproof	page 50
★	I1	ATEX Intrinsic Safety	page 51
★	N1	ATEX Zone 2	page 51
★	ND	ATEX Dust Ignitionproof	page 51
★	E2	Brazil Flameproof	page 53
★	I2	Brazil Intrinsic Safety	page 54
★	E3	China Flameproof	page 54
★	I3	China Intrinsic Safety	page 55
★	N3	China Zone 2	page 56
★	E5	USA Explosionproof	page 49

Code		Description	Ref. page
★	N5	USA Division 2	page 49
★	E6	Canada Explosionproof	page 49
★	N6	Canada Division 2	page 50
★	E7	IECEx Flameproof	page 52
★	I7	IECEx Intrinsic Safety	page 52
★	N7	IECEx Zone 2	page 52
★	NK	IECEx Dust Ignitionproof	page 53
★	EM	Technical Regulations Customs Union (EAC) Flameproof	page 57
★	IM	Technical Regulations Customs Union (EAC) Intrinsic Safety	page 58
★	EP	Korea Flameproof	page 57
★	IP	Korea Intrinsic Safety	page 57
★	K1	Combination of ATEX Flameproof, Intrinsic Safety, Zone 2, and Dust Ignitionproof	page 58
★	K3	Combination of China Flameproof, Intrinsic Safety, Zone 2, and Dust Ignitionproof	page 58
★	K7	Combination of IECEx Flameproof, Intrinsic Safety, Zone 2, and Dust Ignitionproof	page 58
★	KM	Combination of Technical Regulations Customs Union (EAC) Flameproof, Intrinsic Safety, and Dust Ignitionproof	page 58
★	KP	Combination of Korea Flameproof, Intrinsic Safety, and Dust Ignitionproof	page 58
★	KA	Combination of ATEX Flameproof and Canada Explosionproof	page 58
★	KB	Combination of USA and Canada Explosionproof	page 58
★	KC	Combination of ATEX Flameproof and USA Explosionproof	page 58
★	KD	Combination of ATEX Flameproof, USA and Canada Explosionproof	page 58
★	KE	Combination of ATEX and IECEx Flameproof, USA and Canada Explosionproof	page 58

Code		Description	Ref. page
★	KN	Combination of ATEX and IECEx Zone 2, and USA and Canada Division 2	page 58

Connection heads

Code		Description	Details	Image	Ref. page
★	AR1	Rosemount aluminum	■ Conduit connection: ½-in. NPT; M20 ■ Instrument connection: ½-in. NPT; M20; M24 ■ Optional terminal block, stainless steel cover chain, external ground screw, or low temperature options also available	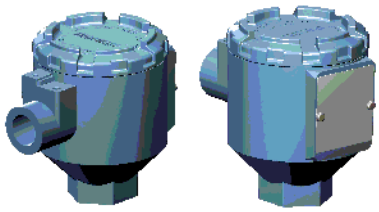	page 59
★	AR2	Rosemount aluminum with display cover	■ Conduit connection: ½-in. NPT; M20 ■ Instrument connection: ½-in. NPT; M20; M24 ■ Optional terminal block, external ground screw, or low temperature options also available	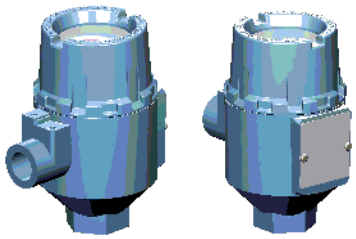	page 59
★	SR1	Rosemount SST	■ Conduit connection: ½-in. NPT; M20 ■ Instrument connection: ½-in. NPT; M20; M24 ■ Optional terminal block, stainless steel cover chain, external ground screw, or low temperature options also available	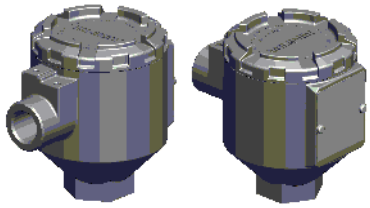	page 59
★	SR2	Rosemount SST with display cover	■ Conduit connection: ½-in. NPT; M20 ■ Instrument connection: ½-in. NPT; M20; M24 ■ Optional terminal block, external ground screw, or low temperature options also available	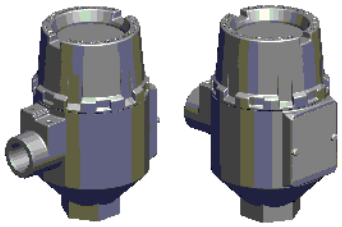	page 59
★	AD1	Dual entry aluminum	■ Conduit connections: ½-in. NPT, M20 x 1.5, or ¾-in. NPT ■ Instrument connection: ½-in. NPT, M20 x 1.5, or M24 ■ Comes with cover chain.		page 59

Code		Description	Details	Image	Ref. page
★	SD1	Dual entry SST	■ Conduit connection: ½-in. NPT, M20 x 1.5, or ¾-in. NPT ■ Instrument connection: ½-in. NPT, M20 x 1.5, or M24 ■ Comes with cover chain.		page 59
★	AF1	BUZ aluminum	■ Conduit connection: M20 x 1.5 ■ Instrument connection: ½-in. NPT or M24		page 59
★	AF3	BUZH aluminum	■ Conduit connection: M20 x 1.5 ■ Instrument connection: ½-in. NPT or M24		page 59
★	AT1	Aluminum with terminal strip	■ Conduit connection: ¾-in. NPT ■ Instrument connection: ½-in. NPT ■ Optional stainless steel cover chain or external ground screw available	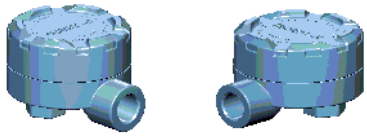	page 59
★	AT3	Aluminum with terminal strip and extended cover	■ Conduit connection: ¾-in. NPT ■ Instrument connection: ½-in. NPT ■ Optional stainless steel cover chain or external ground screw available	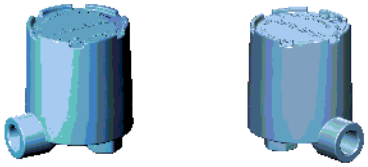	page 59
★	AJ1	Universal 3 entry aluminum junction box	■ Conduit connection: ½-in. NPT or M20 ■ Instrument connection ½-in. NPT ■ Optional terminal block, external ground screw, and stainless steel cover chain available	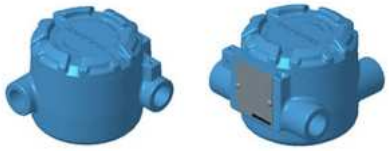	page 59
★	AJ2	Universal 3 entry aluminum junction box with display cover	■ Conduit connection: ½-in. NPT or M20 ■ Instrument connection ½-in. NPT ■ Optional terminal block and external ground screw	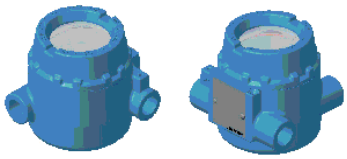	page 59

Conduit entry thread type

Code		Description	Image	
★	C1	½-in. NPT	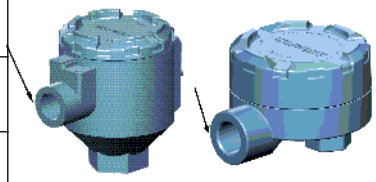	page 63
★	C2	M20 x 1.5		page 63
★	C3	¾-in. NPT		page 63

Instrument connection thread type

Code		Description	Image	Ref. page
★	B1	½-in. NPT	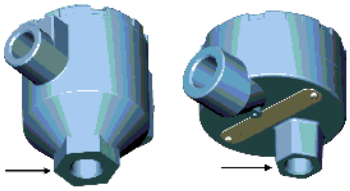	page 63
	B2	M20 x 1.5		page 63
	B4	M24 x 1.5		page 63

Conduit cable glands

Code		Description	Image	Ref. page
★	GN1	Ex d, standard cable diameter		page 64
★	GN2	Ex d, thin cable diameter		page 64
★	GN6	EMV, standard cable diameter		page 64
★	GP1	Ex e, standard cable diameter, polyamide		page 64
★	GP2	Ex e, thin cable diameter, polyamide		page 64

Extension type

Code		Description	Details	Image	
★	UA	Union style, ½-in. NPT, ½-in. NPT	Contains union fitting, which allows orientation of the conduit entry during installation; also known as nipple-union style		page 65

Code		Description	Details	Image	
★	FA	Fixed style, ½-in. NPT, ½-in. NPT	Contains coupling fitting, which does not allow orientation of the conduit entry during installation; also known as nipple-coupling style		page 65
	PD	DIN-style, 12 x 1.5, M24 x 1.5, M18 x 1.5	Contains one single piece assembly; also known as DIN-style extension		page 65
	PE	DIN-style, 12 x 1.5, M24 x 1.5, M20 x 1.5			page 65
	PH	DIN-style, 12 x 1.5, M24 x 1.5, M24 x 1.5			page 65
	PK	DIN-style, 12 x 1.5, M24 x 1.5, G½-in. (BSPF)			page 65
	PQ	DIN Style, 15 x 3, M24 x 1.5, M18 x 1.5			page 65
	PT	DIN-style, 15 x 3, M24 x 1.5, M24 x 1.5			page 65
	TC	DIN-style, 12 x 1.5, M24 x 1.5, ½-in. NPT			page 65
	TD	DIN Style, 12 x 1.5, M24 x 1.5, ¾-in. NPT			page 65
	TH	DIN-style, 12 x 1.5, M24 x 1.5, R ½-in. (BSPT)			page 65
	TN	DIN Style, 15 x 3, M24 x 1.5, ½-in. NPT			page 65

Extension length (E)

Code		Description	Ref. page
★	Exxx	xx.x inches, 2.5 to 20 inches in ½-in. increments (when ordered with Dimension units code E)	page 66
★	Exxx	xxx mm, 65 to 500 mm in 5 mm increments (when ordered with Dimension units code M)	page 66

Lead wire extension: Wire type

Code		Description	Details	Image	Ref. page
	LA	Twisted lead wire extension	Allows addition of length to standard sensor wires.		page 68

Code		Description	Details	Image	Ref. page
	LB	Shielded, PTFE wrapped cable lead wire extension	Standard sensor wires are braided to add ridgidity, strength, and robustness. They are wrapped in PTFE as a chemical shield for added wire protection.		page 68

Lead wire extension: Wire length (T)

Code		Description	Ref. page
	0018	18-in. (1.5 ft.) (when ordered with dimension units option "E")	page 68
	0036	36-in. (3.0 ft.) (when ordered with dimension units option "E")	page 68
	0072	72-in. (6.0 ft.) (when ordered with dimension units option "E")	page 68
	0144	144-in. (6.0 ft.) (when ordered with dimension units option "E")	page 68
	0288	288-in. (24 ft.) (when ordered with dimension units option "E")	page 68
	0600	600-in. (50 ft.) (when ordered with dimension units option "E")	page 68
	0900	900-in. (75 ft.) (when ordered with dimension units option "E")	page 68
	1200	1200-in. (100 ft.) (when ordered with dimension units option "E")	page 68
	xxxx	xxxx-in., 12 to 1200 inches in 1 inch increments (when ordered with dimension units option "E") Example of an 18-in. wire length: 0018	page 68
	xxxx	xxxx cm, 30 to 3048 cm in 1 cm increments (when ordered with dimension units option "M") Example of a 50 cm wire length: 0050	page 68

Lead wire extension: Armor type

Code		Description	Details	Image	Ref. page
	AN	Armored cable lead wire extension	Bare armored cable around wires to provide mechanical protection. There is no coating on the wires.		page 68

Code		Description	Details	Image	Ref. page
	AC	PVC-coated armored cable lead wire extension	Armored cable around wires to provide mechanical protection. The armored cable is coated with Polyvinyl Chloride (PVC) coating.		page 68
	AP	PTFE-coated armored cable lead wired extension	Armored cable around wires to provide mechanical protection. The armored cable is coated with Polytetraflouroethylene (PTFE) coating.		page 68

Lead wire extension: Cable glands

Code		Description	Image	Ref. page
	J1	½-in. NPT		page 69
	J2	M20 x 1.5		page 69

Lead wire extension: Shielded cable drain wire

Code		Description	Details	Image	Ref. page
	DW	Drain wire	Reduces resistance from ambient or electrical noise. It is only available with the shielded cable.		page 69

Lead wire extension: Adapter-mounted cable gland

Code		Description	Details	Image	Ref. page
	F1	Adapter-mounted cable gland, ½ NPT	Prevents process fluid from exiting a non sealed adapter (ex. Spring-loaded adapter).		page 69

Lead wire extension: Termination style

Code		Description	Details	Image	Ref. page
	WB	Spade lugs	Terminals allow for ease of wiring.		page 70

Code		Description	Details	Image	Ref. page
	WD	Bootlace ferrules	Ferrules provide ease in wiring and give better electrical contact where needed.		page 70

Temperature calibration

Code		Description	Ref. page
★	V20Q4	32 to 212 °F (0 to 100 °C)	page 72
★	V21Q4	32 to 392 °F (0 to 200 °C)	page 72
★	V22Q4	32 to 842 °F (0 to 450 °C)	page 72
★	V23Q4	32 to 1112 °F (0 to 600 °C)	page 72
★	V24Q4	–58 to 212 °F (–50 to 100 °C)	page 72
★	V25Q4	–58 to 392 °F (–50 to 200 °C)	page 72
★	V26Q4	–58 to 842 °F (–50 to 450 °C)	page 72
★	V27Q4	–76 to 1112 °F (–60 to 600 °C)	page 72

Temperature range calibration

Code		Description	Ref. page
★	X8Q4	Custom specified temperature range	page 73

Single-point calibration

Code		Description	Ref. page
★	X91Q4	Resistance of one specified temperature point	page 71

Ground screw

Code		Description	Details	Image	Ref. page
★	G1	External ground screw	Allows for grounding of wires to the connection head	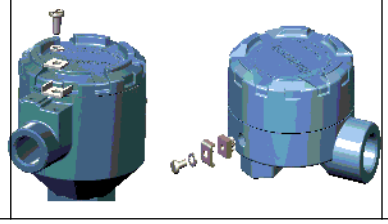	page 73

Cover chain

Code		Description	Details	Image	Ref. page
★	G3	Cover chain	Keeps the cover connected to the connection head when disassembled; not available with display covers	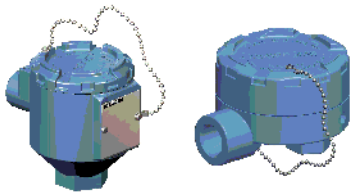	page 73

Terminal block

Code		Description	Details	Images	Ref. page
★	TB	Terminal block	Available if wire termination in a connection head is required	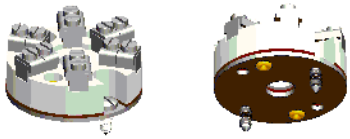	page 74

Low temperature housing

Code		Description	Ref. page
★	LT	Low temperature connection head option down to –60 °F (–51 °C)	page 74
	BR	-76 °F (-60 °C) cold temperature operation	page 74

Transmitter assembled to sensor

Code		Description	Details	Ref. page
★	XA	Process-ready assembly of transmitter and sensor	Ensures sensor is threaded into connection head with transmitter and torqued for process-ready installation; sensor is wired to the transmitter	page 74
★	XC	Hand-tight assembly of transmitter and sensor	Ensures sensor is threaded into connection head with transmitter but only hand tightened; manual wiring is required	page 74

Thermowell assembled to sensor

Code		Description	Details	Ref. page
★	XW	Process-ready assembly of sensor and thermowell	Ensures sensor is threaded into thermowell and torqued for process-ready installation	page 75
★	XT	Hand-tight assembly of sensor and thermowell	Ensures sensor is threaded into thermowell but only hand tightened	page 75

Extended product warranty

Code		Description	Details	Ref. page
★	WR3	3-year limited warranty	This warranty option is to extend your manufacturers warranty to three or five years for manufacturer related defects	page 75
★	WR5	5-year limited warranty		page 75

Product certifications

Rev 2.7

Back to RTD ordering information

Back to Thermocouple ordering information

European Directive information

A copy of the EU Declaration of Conformity can be found at the end of the Quick Start Guide. The most recent revision of the EU Declaration of Conformity can be found at Emerson.com/Rosemount.

Ordinary Location Certification

The Rosemount 214C has been examined and tested to determine that the design meets the basic electrical, mechanical, and fire protection requirements by a nationally recognized test laboratory (NRTL) as accredited by the Federal Occupational Safety and Health Administration (OSHA).

Note
The terminal strip in the Aluminum with Terminal Strip (AT1 or AT3) connection head requires sensor lead wires to have a wire termination (Ex: Bootlace ferrule or spade lug).

North America

The US National Electrical Code® (NEC) and the Canadian Electrical Code (CEC) permit the use of Division marked equipment in Zones and Zone marked equipment in Divisions. The markings must be suitable for the area classification, gas, and temperature class. This information is clearly defined in the respective codes.

North America

E5 USA Explosionproof (XP) and Dust-Ignitionproof (DIP)

Certificate 70044744

Standards FM 3600:2011, FM 3615:2006, UL 50E:2007, UL 61010-1:2010, ANSI/ISA 60529:2004

Markings XP CL I, DIV 1, GP B, C, D; DIP CL II, DIV 1, GP E, F, G; CL III; T6 (-50 °C ≤ T_a ≤ +80 °C), T5 (-50 °C ≤ T_a ≤ +95 °C); Seal not required; installed per Rosemount drawing 00214-1030; Type 4X† and IP 66/67; V_{max} 35 VDC, 750 mW_{max}

Special Conditions for Safe Use (X):

1. Flameproof joints are not intended for repair.
2. Cable entries must be used which maintain the ingress protection of the enclosure. Unused cable entries must be filled with suitable blanking plugs.

N5 USA Division 2 (NI)

Certificate 70044744

Standards FM 3600:2011, FM 3611:2004, UL 50E:2007, UL 61010-1:2010, ANSI/ISA 60529:2004

Markings NI CL I, DIV 2, GP A, B, C, D; T6 (-50 °C ≤ T_a ≤ +80 °C), T5 (-50 °C ≤ T_a ≤ +95 °C); installed per Rosemount drawing 00214-1030; Type 4X† and IP 66/67; V_{max} 35 VDC, 750 mW_{max}

E6 Canada Explosionproof (XP) and Dust-Ignitionproof (DIP)

Certificate 70044744

Standards CAN/CSA C22.2 No. 0:2010, CAN/CSA No. 25-1966 (R2000), CAN/CSA C22.2 No. 30-M1986 (R2012), CAN/CSA C22.2 No. 94-M1991 (R2011), CAN/CSA C22.2 No. 61010-1:2012

Markings XP CL I, DIV 1, GP B*, C, D; DIP CL II, DIV 1, GP E, F, G; CL III; T6 (-50 °C ≤ T_a ≤ +80 °C), T5 (-50 °C ≤ T_a ≤ +95 °C); Seal not required; installed per Rosemount drawing 00214-1030; Type 4X† and IP 66/67; V_{max} 35 VDC, 750 mW_{max}

Special Conditions for Safe Use (X):

1. Flameproof joints are not intended for repair.
2. Cable entries must be used which maintain the ingress protection of the enclosure. Unused cable entries must be filled with suitable blanking plugs.

N6 Canada Division 2

Certificate 70044744

Standards CAN/CSA C22.2 No. 0:2010, CAN/CSA C22.2 No. 94-M1991 (R2011), CAN/CSA No. 213-M1987 (R2013), CAN/CSA C22.2 No. 61010-1:2012

Markings CL I, DIV 2, GP A, B, C, D; T6; (–50 °C ≤ T_a ≤ +80 °C), T5 (–50 °C ≤ T_a ≤ +95 °C); installed per Rosemount drawing 00214-1030; Type 4X† and IP 66/67; V_{max} 35 VDC, 750 mW_{max}

†Spring loaded indicator has reduced ingress and dust ratings. Spring loaded sensors must be installed in a thermowell to maintain dust and ingress ratings. Un-painted aluminum enclosures are Type 4 rated. *Assembly is not Canada Explosionproof (E6) rated to Group B if the AT1 (Aluminum with Terminal Strip) connection head is used.

Europe

E1 ATEX Flameproof

Certificate DEKRA 19ATEX0076 X

Standards EN IEC 60079-0: 2018, EN 60079-1: 2014

Markings Ⓔx II 2 G Ex db IIC T6...T1 Gb, (-60 °C ≤ T_a ≤ +80 °C)

Special Conditions for Safe Use (X):

1. Flameproof joints are not intended for repair.
2. Non-Standard Paint options may cause risk from electrostatic discharge. Avoid installations that cause electrostatic build-up on painted surfaces, and only clean the painted surfaces with a damp cloth. If paint is ordered through a special option code, contact the manufacturer for more information.
3. When provided on their own, the adapter style sensors must be assembled to a suitable Ex db enclosure with a free internal volume no greater than 550 cm^3.
4. Guard DIN sensors against impacts greater than 4J.

Process temperature range (°C)(1)	Ambient temperature range (°C)(1)	Temperature class
-60 °C to +80 °C	-60 °C to +80 °C	T6
-60 °C to +95 °C	-60 °C to +80 °C	T5
-60 °C to +130 °C	-60 °C to +80 °C	T4
-60 °C to +195 °C	-60 °C to +80 °C	T3
-60 °C to +290 °C	-60 °C to +80 °C	T2

-60 °C to +440 °C	-60 °C to +80 °C	T1

(1) *Min. process temperature and min. ambient temperature is limited to -50 °C for models with enclosure designation "AD1" or "SD1"*

I1 ATEX Intrinsic Safety

Certificate Baseefa16ATEX0101X

Standards EN 60079-0:2012+A11:2013, EN 60079-11:2012

Markings Ⓔx II 1 G Ex ia IIC T5/T6 Ga (SEE CERTIFICATE FOR SCHEDULE)

Thermocouples; P_i = 500 mW	T6 -60 °C ≤ T_a ≤ +70 °C
RTDs; P_i = 192 mW	T6 -60 °C ≤ T_a ≤ +70 °C
RTDs; P_i = 290 mW	T6 -60 °C ≤ T_a ≤ +60 °C
	T5 -60 °C ≤ T_a ≤ +70 °C

Special Condition for Safe Use (X):

The equipment must be installed in an enclosure which affords it a degree of ingress protection of at least IP20.

N1 ATEX Zone 2

Certificate BAS00ATEX3145

Standards EN 60079-0:2012+A11:2013, EN 60079-15:2010

Markings Ⓔx II 3 G Ex nA IIC T5 Gc (-40 °C ≤ T_a ≤ 70 °C)

ND ATEX Dust Ignitionproof

Certificate DEKRA 19ATEX0076 X

Standards EN IEC 60079-0:2018, EN 60079-31:2014

Markings Ⓔx II 2 D Ex tb IIIC T130 °C Db, (-60 °C ≤ T_a ≤ +80 °C)

Special Conditions for Safe Use (X):

1. Non-Standard Paint options may cause risk from electrostatic discharge. Avoid installations that cause electrostatic build-up on painted surfaces, and only clean the painted surfaces with a damp cloth. If paint is ordered through a special option code, contact the manufacturer for more information.
2. When provided on their own, the adapter style sensors must be assembled to a suitable Ex tb enclosure with a free internal volume no greater than 550 cm^3.
3. The spring loaded adapter style sensors and DIN style sensors must be installed in a thermowell to maintain Ex tb protection.
4. The contact indicating adapter style sensor does not meet the requirements for type of protection "tb".

Process temperature range (°C)(1)	Ambient temperature range (°C)(1)	Maximum surface temperature "T"
-60 °C to +100 °C	-60 °C to +80 °C	T130 °C

(1) *Min. process temperature and min. ambient temperature is limited to -50 °C for models with enclosure designation "AD1" or "SD1".*

Product Data Sheet
June 2019
00813-0200-4952, Rev EB

Rosemount™ 114C Thermowells

- Wide variety of industry standard process connections including flanged, threaded, welded, and Van Stone.
- Large selection of thermowell materials to ensure proper process compatibility from stainless steel to exotic materials such as duplex and alloy C-276.
- Additional thermowell options and certificates available.

EMERSON

Rosemount 114C Threaded Thermowells

Threaded thermowell overview

Threaded thermowells are threaded into a process pipe or tank, allowing for easy installation and removal when necessary. While this is a common mounting method, it has the lowest pressure rating of all mounting configuration options.

Figure 2. Standard Offering–Threaded

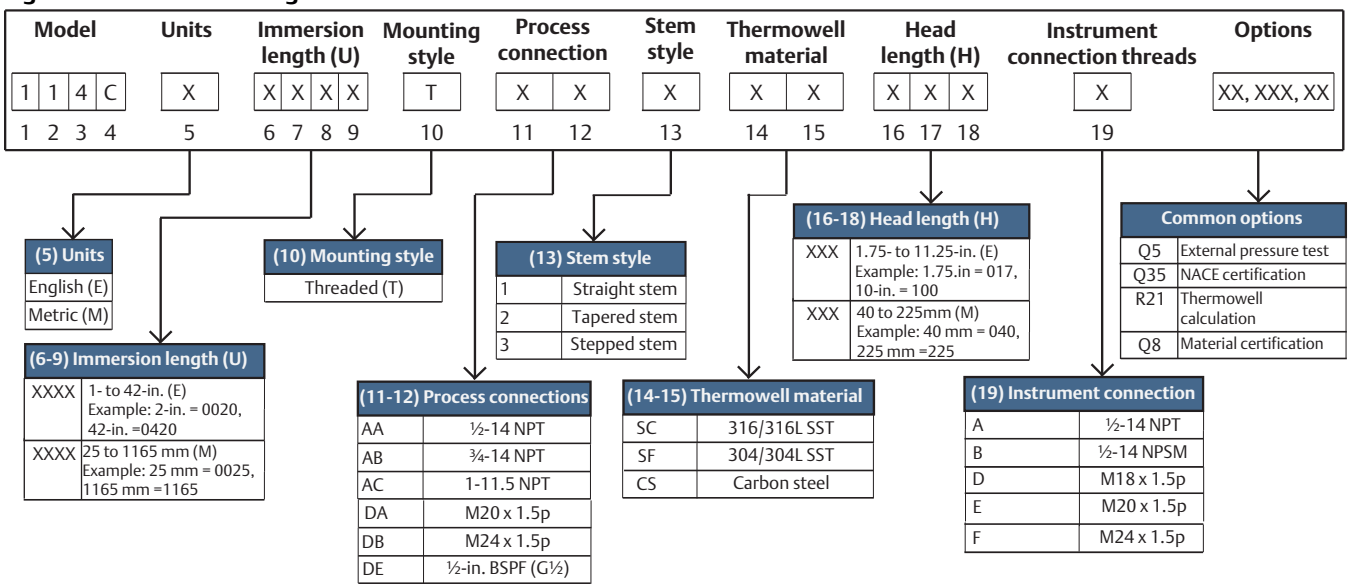

The common options shown in Figure 2 represent a partial offering; reference the Rosemount 114C Threaded Ordering Information for a full list of available options.

Figure 3. Threaded Thermowell Components

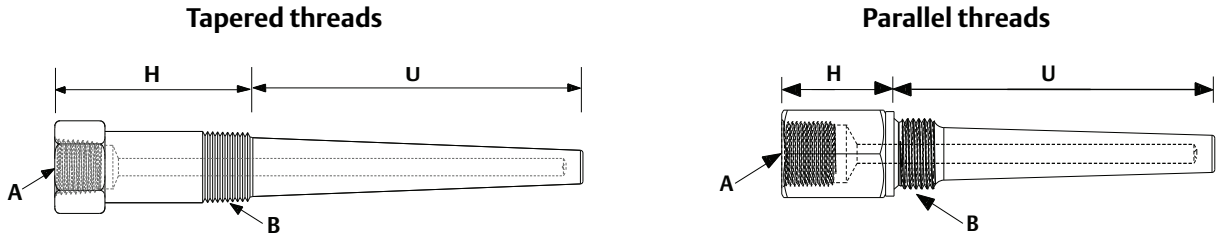

A. Instrument connection
B. Process connection

H. Head length
U. Immersion length

Note
Wetted surface includes engaged threads and immersion length (U).

Use the form below to record your model code:

Model				Units	Immersion length (U)	Mounting style	Process connection	Stem style	Thermowell material	Head length (H)	Instrument connection	Options
1	**1**	**4**	**C**			**T**						
1	2	3	4	5	6 through 9	10	11 and 12	13	14 and 15	16 through 18	19	X X X X X

Threaded ordering information

Figure 4. Model Number Ordering Example

Model				Units	Immersion length (U)				Mounting style	Process connection		Stem style	Thermowell material		Head length (H)			Instrument connection	Options
1	1	4	C	E	0	0	6	0	T	A	A	1	S	C	0	5	0	A	WR5, Q76...
1	2	3	4	5	6	7	8	9	10	11	12	13	14	15	16	17	18	19	XXXXX

The numbers below the model number ordering example correlate to the character place numbers in the second column of the ordering table.

Table 1. Rosemount 114C Threaded Ordering Information

The starred offerings (★) represent the most common options and should be selected for best delivery. The non-starred offerings are subject to additional delivery lead time.

Place #s 1-4		Model	Details		Ref. page
★	114C	Barstock temperature thermowell	Made with a standard bore diameter of 0.26-in. (6.6 mm) and tip wall thickness of 0.25-in. (6.4 mm)		N/A
Place # 5		**Dimension units**			**Ref. page**
★	E	English units (in.)	Specifies whether length units will be in inches (in.) or millimeters (mm)		59
★	M	Metric units (mm)			59
Place #s 6-9		**Immersion length (U)**	**Tapered threads**	**Parallel threads**	**Ref. page**
			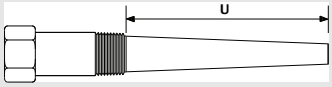	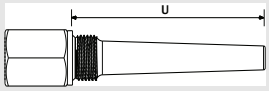	
★	xxxx	xxx.x-in., 1.00 to 100-in. in 1/4-in. increments (when ordered with dimension units code E)			59
		Example of a 6.25-in. length where the second decimal is dropped off: 0062			
★	xxxx	xxxx mm, 25 to 2500 mm in 5 mm increments (when ordered with dimension units code M)			59
		Example of a 50 mm length: 0050			
Place # 10		**Mounting style**			**Ref. page**
★	T	Threaded			N/A
Place #s 11-12		**Process connection**			**Ref. page**
★	AA	1/2–14 NPT	Tapered threads		N/A
★	AB	3/4–14 NPT	Tapered threads		N/A
★	AC	1–11.5 NPT	Tapered threads		N/A
★	AD	1 1/2–11.5 NPT	Tapered threads		N/A
★	AE	1/2-in. BSPT	Tapered threads		N/A

Table 1. Rosemount 114C Threaded Ordering Information

The starred offerings (★) represent the most common options and should be selected for best delivery. The non-starred offerings are subject to additional delivery lead time.

★	AF	3/4-in. BSPT	Tapered threads		N/A
★	AG	1-in. BSPT	Tapered threads		N/A
★	DA	M20 × 1.5p	Parallel threads		N/A
★	DB	M24 × 1.5p	Parallel threads		N/A
★	DC	M27 × 2p	Parallel threads		N/A
	DD	M33 × 2p	Parallel threads		N/A
★	DE	1/2-in. BSPF (G1/2)	Parallel threads		N/A
★	DF	3/4-in. BSPF (G3/4)	Parallel threads		N/A
★	DG	1-in. BSPF (G1)	Parallel threads		N/A
Place # 13		**Stem style**	**Details**	**Image**	**Ref. page**
★	1	Straight	Minimum immersion length 1-in. (25 mm) - Tapered threads 1.75-in. (45 mm) - Parallel threads		60
★	2	Tapered	Minimum immersion length 1-in. (25 mm) - Tapered threads 1.75-in. (45 mm) - Parallel threads	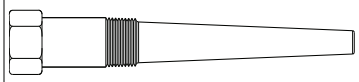	60
★	3	Stepped	Minimum immersion length 3-in. (75 mm) - Tapered threads 3.75-in. (95 mm) - Parallel threads	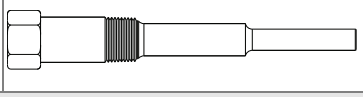	60
Place #s 14-15		**Thermowell material**	**Details**		**Ref. page**
★	SC	316/316L dual rated			61
	SD	316/316L dual rated (NORSOK)	Must order the Q8 Material Certificate to get NORSOK documentation		62
★	SF	304/304L dual rated			61
★	CS	Carbon steel (A-105)			61
	SG	316Ti SST			61
	SL	310 SST			61
	SM	321 SST			61
	SN	321H SST			61
	SR	904L SST			61
	SP	347 SST			61
	AB	Alloy B3			61
	AC	Alloy C-276			61
	AG	Alloy 20			62
	AH	Alloy 400			61
	AK	Alloy 600			61

Table 1. Rosemount 114C Threaded Ordering Information

The starred offerings (★) represent the most common options and should be selected for best delivery. The non-starred offerings are subject to additional delivery lead time.

	AM	Alloy 601		61
	AN	Alloy 625		61
	AP	Alloy 800		61
	AQ	Alloy 800H/HT		61
	AR	Alloy 825		61
	AU	Alloy C-202		61
	AS	Alloy F44 Mo6		61
	MO	Molybdenum		61
	CA	Chrome-Moly Grade B-11/F-11 Class II		61
	CB	Chrome-Moly Grade B-22/ F-22 Class III		61
	CC	Chrome-Moly Grade F-91		61
	NK	Nickel 200		61
	TT	Titanium Grade 2		61
	DS	Super duplex SST Grade F-53		61
	DT	Super duplex SST Grade F-53 – NORSOK	Must order the Q8 Material Certificate to get NORSOK documentation	62
	DU	Duplex 2205 Grade F51		61
	DV	Duplex 2205 Grade F51 – NORSOK	Must order the Q8 Material Certificate to get NORSOK documentation	62
Place # 16-18		**Head length (H)**	**Tapered threads** 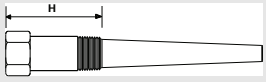	**Parallel threads** 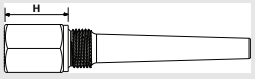	**Ref. page**
★	xxx	xx.x-in., 1.75 to 11.25-in. in 1/4-in. increments (when ordered with dimension units code E)		63
		Example of a 6.25-in. length where the second decimal is dropped off: 062 (default head length = 1.75-in.)		
★	xxx	xxx mm, 40 to 225 mm in 5 mm increments (when ordered with dimension units code M)		63
		Example of a 50 mm length: 050 (default head length = 45 mm)		

Table 1. Rosemount 114C Threaded Ordering Information

The starred offerings (★) represent the most common options and should be selected for best delivery. The non-starred offerings are subject to additional delivery lead time.

Place # 19		Instrument connection	Details	Image	Ref. page
★	A	1/2–14 NPT	Female threads	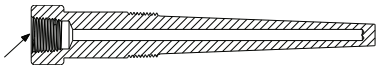	64
★	B	1/2–14 NPSM			64
	C	3/4–14 NPT			64
	D	M18 × 1.5p			64
	E	M20 × 1.5p			64
	F	M24 × 1.5p			64
	G	G 1/2-in. (BSPF)			64
	H	G 3/4-in. (BSPF)			64
	J	M27 × 2p			64
	K	M14 × 1.5p			64

Options (include with selected model number)

Sensor/thermowell assemble to options			Details	Ref. page
★	XT	Hand tight assembly of sensor and thermowell	Ensures sensor is threaded into thermowell but only hand tightened	65
★	XW	Process-ready assembly of sensor and thermowell	Ensures sensor is threaded into thermowell and torqued for process-ready installation	65
Extended product warranty				**Ref. page**
★	WR3	3-year limited warranty	This warranty option extends manufacturer's warranty to three or five years for manufacturer related defects	65
★	WR5	5-year limited warranty		65
Thermowell calculation				**Ref. page**
★	R21	Thermowell calculation	Set of calculations to ensure thermowells are safe in certain process conditions	65
NACE certification				**Ref. page**
★	Q35	NACE certification	Meets MR0175/ISO 15156 and MR0103 requirements	66
PMI testing				**Ref. page**
	Q76	PMI testing	Verifies chemical composition of material	66
Material certification				**Ref. page**
★	Q8	Material certification	Certificate for material conformance and traceability in accordance with EN 10204 type 3.1	67

Table 1. Rosemount 114C Threaded Ordering Information

The starred offerings (★) represent the most common options and should be selected for best delivery. The non-starred offerings are subject to additional delivery lead time.

Material tests				**Ref. page**
	M01	Low temperature Charpy Test	Measures the low temperature ductility of the material	67
	M02	Ultrasonic material test	Examination of steel forgings for flaws and inclusions	67
Surface finish			**Details**	**Ref. page**
	Q16	Certification	Certificate showing measured surface finish values	68
	R14	Finish < Ra 0.3 µm (12 µin)	Improves surface roughness of thermowell	68
Electropolish				**Ref. page**
	R20	Electropolish	Improve smoothness and surface quality	68
Hydrostatic external pressure test				**Ref. page**
★	Q5	Standard external pressure test	Verifies structural quality and checks for leaks at thermowell process connection and stem	68
★	Q9	Extended external pressure test	Same as standard external pressure test but tested twice as long	69
Hydrostatic internal pressure test				**Ref. page**
★	Q85	Standard internal pressure test	Verify internal structural integrity of thermowell	69
★	Q86	Extended internal pressure test	Same as standard internal pressure test but tested twice as long	70
Canadian Registration Number				**Ref. page**
	Q17	Canadian Registration Number	Canadian approvals for all provinces (Approved materials in reference section)	70
Dye penetration test				**Ref. page**
★	Q73	Dye penetration test	Checks quality of material	70
Wall thickness test				**Ref. page**
	Q83	Ultrasonic test	Checks the bore concentricity of the thermowell	71
	Q84	Radiography (X-ray) test	Checks the bore concentricity of the thermowell	72
Special cleaning				**Ref. page**
	Q6	Special cleaning	Oxygen enriched environment cleaning per ASTM G93	71
Thermowell markings				**Ref. page**
	R40	Test markings on thermowell	External marking of the thermowell for specific tests (see reference page for list of tests)	71

Table 1. Rosemount 114C Threaded Ordering Information

The starred offerings (★) represent the most common options and should be selected for best delivery. The non-starred offerings are subject to additional delivery lead time.

Plug and chain				Ref. page
	R06	Stainless steel	Protects thermowell threads when sensor is not installed	73
	R23	Brass	Protects thermowell threads when sensor is not installed	73
Spherical tip				**Ref. page**
	R60	Spherical tip	Changes the flat tip to spherical	72
Vent hole				**Ref. page**
	R11	Vent hole	Allows for the venting of a thermowell and for indication that thermowell structural integrity has been compromised	73
Thermowells with wrench flats				**Ref. page**
	R37	Thermowells with wrench flats	Converts the two wrench flats to hex wrench flats; only applies to exotic materials	79
Root diameter (A)			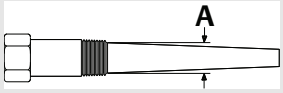	**Ref. page**
	Axxx	x.xx-in., 0.36 to 3.15-in. in 0.01-in. increments (when ordered with dimension units code E)		80
		Examples: Code A040 = 0.4-in., Code A315 = 3.15-in.		
	Axxx	xx.xx mm, 10 to 80 mm in 0.5 mm increments (when ordered with dimension units code M)		80
		Examples: Code A100 = 10.0 mm, Code A755 = 75.5 mm		
Tip diameter (B)				**Ref. page**
	Bxxx	x.xx-in., 0.36 to 1.83-in. in 0.01-in. increments (when ordered with dimension units code E)		81
		Examples: Code B040 = 0.4-in., Code B180 = 1.80-in.		
	Bxxx	xx.xx mm, 10 to 46 mm in 0.5-mm. increments (when ordered with dimension units code M)		81
		Examples: Code B100 = 10.0 mm, Code B455 = 45.5 mm		
Non-standard bore diameter (d)			**Details** / **Image**	**Ref. page**
	D01	0.276-in./7.0 mm	Default = 0.26-in. (6.6 mm) 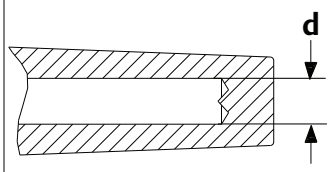	82
	D03	0.138-in./3.5 mm		82
	D04	0.386- in./9.8 mm		82
	D05	0.354-in./9.0 mm		82
	D06	0.433-in./11.0 mm		82

Table 1. Rosemount 114C Threaded Ordering Information

The starred offerings (★) represent the most common options and should be selected for best delivery. The non-starred offerings are subject to additional delivery lead time.

Non-standard tip thickness (t)					Ref. page
	T01	0.197-in./5.0 mm	Default = 0.25-in. (6.4 mm)	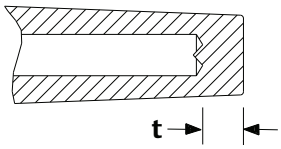	82
	T02	0.236-in./6.0 mm			82

Threaded installation

Threaded thermowells are screwed into the process using a threaded fitting or directly into a tapped pipe if there is sufficient wall thickness. Tapered threads will deform to each other to create a seal. Thread sealant and appropriate torque should be applied to reduce risk of leaks.

Figure 5. Installation Components

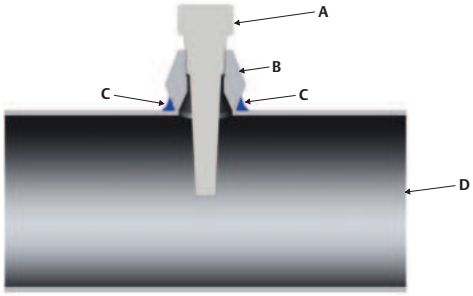

A. Thermowell
B. Threaded fitting
C. Weld
D. Process

Threaded thermowell drawings

Figure 6. Thread Mount Thermowell Drawings (Tapered Thread)[1]

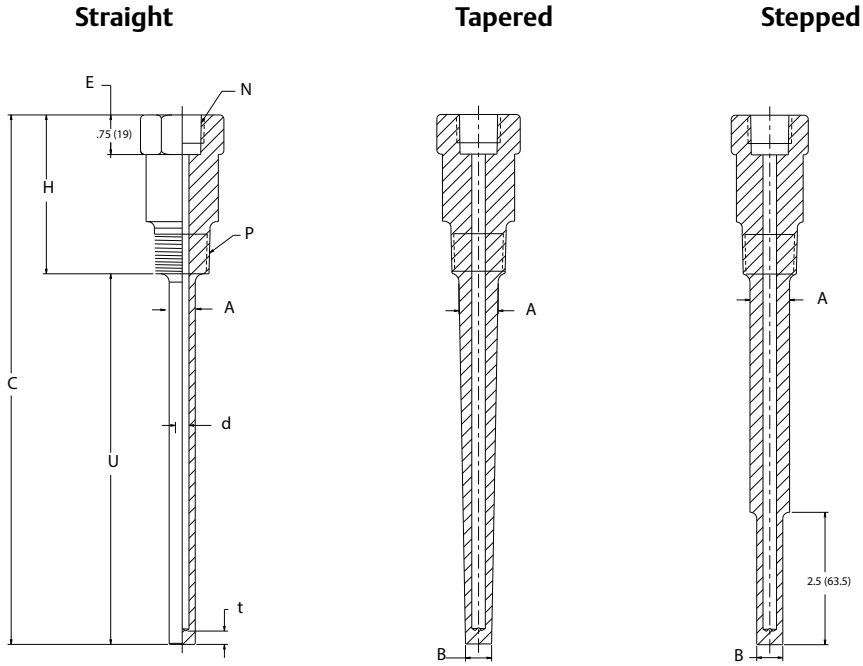

A. Root diameter
B. Tip diameter
C. Total length (U + H)
E. Wrench allowance
F. Thread allowance
H. Head length

N. Instrument connection
P. Process connection
U. Immersion length
d. Bore diameter
t. Tip thickness

Table 2. Thread Mount Thermowells (Tapered Thread)[1]

Code	Code T, threaded mounting style	Wrench flat size "G"		Root diameter stepped stem	Root diameter tapered stem	Tip diameter tapered stem	Root diameter straight stem	Thread specification
	Process connection "P"	Metric units (code M)	English units (code E)					
AA	1/2–14 NPT	1.18 (30)	1 1/8 (28.6)	0.67 (17)	0.67 (17)	0.50 (12.7)	0.669 (17)	NPT per SAE -AS 71051 (reference PS-71)
AB	3/4–14 NPT	1.18 (30)	1 1/8 (28.6)	0.75 (19)	0.89 (22.5)	0.63 (16)	0.71 (18)	
AC	1–11.5 NPT	1.34 (34)	1 1/4 (31.8)	0.85 (21.5)	1.04 (26.5)	0.71 (18)	0.71 (18)	
AD	1 1/2–11.5 NPT	1.89 (48)	1 3/4 (44.5)	0.85 (21.5)	1.04 (26.5)	0.71 (18)	0.71 (18)	
AE	1/2-in. BSPT	1.18 (30)	1 1/8 (28.6)	0.67 (17)	0.67 (17)	0.50 (12.7)	0.669 (17)	THD per ISO 7/1 (BS 21)
AF	3/4-in. BSPT	1.18 (30)	1 1/8 (28.6)	0.75 (19)	0.89 (22.5)	0.63 (16)	0.71 (18)	
AG	1-in. BSPT	1.34 (34)	1 1/4 (31.8)	0.85 (21.5)	1.04 (26.5)	0.71 (18)	0.71 (18)	

1. Dimensions are in inches (millimeters).

1. *Total length = U+ H.*

Figure 7. Thread Mount Thermowell Drawings (Parallel Thread)[1]

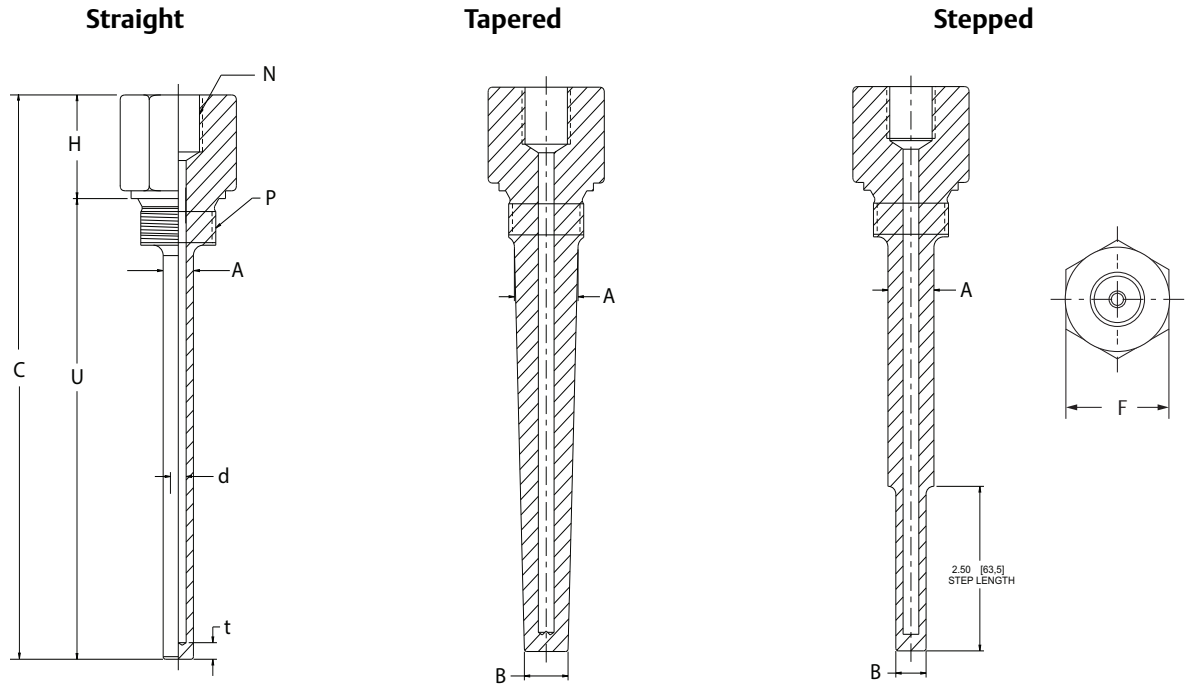

A. Root diameter
B. Tip diameter
C. Total length (U + H)
F. Hex size
H. Head length
N. Instrument connection
P. Process connection
U. Immersion length
d. Bore diameter
t. Tip thickness

Table 3. Thread Mount Thermowells (Parallel Thread)[1]

Code	Code T, threaded mounting style	Hex size "F"	Root diameter stepped stem	Root diameter tapered stem	Tip diameter tapered stem and straight stem	Thread specification
	Process connection "P"					
DA	M20 × 1.5	1.18 (30)	0.67 (17)	0.67 (17)	0.5 (12.7)	Thread per BS3643
DB	M24 × 1.5	1.18 (30)	0.75 (19)	0.75 (19)	0.5 (12.7)	
DC	M27 × 2	1.26 or 1.42 (32 or 36)	0.75 (19)	0.75 (19)	0.5 (12.7)	
DD	M33 × 2	1.61 (41)	0.85 (21.5)	1.04 (26.5)	0.71 (18)	
DE	1/2-in. BSPF (G1/2)	1.06 (27)	0.67 (17)	0.67 (17)	0.5 (12.7)	Thread per ISO 228/1 (BS 2779)
DF	3/4-in. BSPF (G3/4)	1.26 (32)	0.75 (19)	0.75 (19)	0.5 (12.7)	
DG	1-in. BSPF (G1)	1.61 (41)	0.85 (21.5)	1.04 (26.5)	0.71 (18)	

1. Dimensions are in inches (millimeters).

Note

Hex size will be different depending on units selected (english and metric).
Wrench flats are used on exotic materials instead of hex flats. For hex flats on exotic materials, select option R37.
Additional root and tip diameters available.

1. *Total length = U+ H.*

FISA TEHNICA E-PP
Priza de potential

Nr Crt.	Specificațiile tehnice impuse prin Caietul de sarcini	Corespondența propunerii tehnice cu specificațiile tehnice impuse prin Caietul de sarcini	Producător
0	1	2	3
1.	**Parametrii tehnici si funcționali:** - Număr borne: 2 - Se amplasează conform proiect.	**Parametrii tehnici si funcționali:** - Număr borne: 2 - Se amplasează conform proiect.	ELCAS
2.	Specificaţii de performanţă şi condiţii privind siguranta în exploatare: - Materiale principale:policarbonat;PVC.	**Specificaţii de performanţă şi condiţii privind siguranta în exploatare:** - Materiale principale:policarbonat;PVC.	
3.	**Condiții privind conformitatea cu standarde relevante:** — Design According to ANSI/ASME B31.3/4/8 — Dimens. ASME VIII Div. — Cerințe suplimentare din proiect.	**Condiții privind conformitatea cu standarde relevante:** — Design According to ANSI/ASME B31.3/4/8 — Dimens. ASME VIII Div. — Cerințe suplimentare din proiect.	
4.	**Condiţii de garanţie şi postgaranţie:** - Producătorul va garanta calitatea şi buna funcţionare a produsului timp de 24 luni de la punerea în funcţiune sau de 36 luni de la data livrarii. - Produsul va corespunde normelor tehnice şi standardelor europene.	**Condiţii de garanţie şi postgaranţie:** - Producătorul va garanta calitatea şi buna funcţionare a produsului timp de 24 luni de la punerea în funcţiune sau de 36 luni de la data livrarii. - Produsul va corespunde normelor tehnice şi standardelor europene.	
5.	**Condiţii cu caracter tehnic:** - Nu vor fi luate în consideraţie decât ofertele însoţite de documentaţie completă pentru selecţie şi montaj în limba română. - Vor fi anexate: • instrucţiuni de montaj (scheme de conectare, broşuri, cataloage); • instrucţiuni de exploatare; • buletine de încercări, verificări, probe; • declaratie de conformitate.	**Condiţii cu caracter tehnic:** - Nu vor fi luate în consideraţie decât ofertele însoţite de documentaţie completă pentru selecţie şi montaj în limba română. - Vor fi anexate: • instrucţiuni de montaj (scheme de conectare, broşuri, cataloage); • instrucţiuni de exploatare; • buletine de încercări, verificări, probe; • declaratie de conformitate.	

PRIZA DE POTENTIAL

Priza de potential cu doua sau mai multe borne este o cutie cu eclisa folosita pentru masuratori de protectie activa si protectie la descarcari atmosferice, imbinari electroizolante si/sau protectia cu anozi de zinc a tubului de protectie. Priza de potenţial se execută conform standardelor în vigoare şi are cablurile sudate sau lipite

Prizele de potenţial sunt amplasate:

- la distanţe de câte 500 – 1000 m de-a lungul traseului conductei;

- la încrucişarea cu alte conducte sau structuri metalice;

- de o parte şi de alta a traversărilor aeriene şi subterane ale conductei;

- la tuburile de protecţie protejate catodic;

- de o parte şi de alta a îmbinărilor electroizolante;

- lângă staţia de protecţie catodică, având legături la conductă şi la priza anodică;

- la fiecare al treilea nod galvanic;

- în punctele critice ale reliefului etc. (3) Verificarea bunei funcţionări a prizelor de potenţial se face semestrial pe conducta subterană şi pe alte structuri subterane.

Caracteristici tehnice:

- Numar borne: 2 sau mai multe
- Material: cutie PVC
- Utilizare: eclisa de separatie necesara la instalatii de legare la pamant
- Corespunde standard-ului: STAS 7335/8-85

FISA TEHNICA E-ES

Eclator in priza de potential pentru imbinari electroizolante monobloc

Nr Crt.	Specificațiile tehnice impuse prin Caietul de sarcini	Corespondența propunerii tehnice cu specificațiile tehnice impuse prin Caietul de sarcini	Producător
0	1	2	3
1.	Parametrii tehnici si funcționali: - Tensiune reziduală la curent de impuls de trăsnet: 2,5kV; - Curent nominal de descărcare 8/20µs:100kA; - Curent de impuls de trăsnet 10/350µs:100kA; - Temperatură de lucru: -25° C ... +50°C ; - Lungime cabluri conectare: max. 0,4m; - Tensiune minima de descarcare:0,3kV;	Parametrii tehnici si funcționali: - Tensiune reziduală la curent de impuls de trăsnet: 2,5kV; - Curent nominal de descărcare 8/20µs:100kA; - Curent de impuls de trăsnet 10/350µs:100kA; - Temperatură de lucru: -25° C ... +50°C ; - Lungime cabluri conectare: max. 0,4m; Tensiune minima de descarcare:0,3kV;	PHOENIX CONTACT
2.	Specificaţii de performanţă şi condiţii privind siguranta în exploatare: - Material de protectie metalic; - Se monteaza in priza de potenţial conform desene proiect; - Grad de protectie: IP65; - Certificare pentru mediu cu pericol de explozie: grupa II zona II; - Temperatura maximă de suprafata corespunzătoare clasei T4.	Specificaţii de performanţă şi condiţii privind siguranta în exploatare: - Material de protectie metalic; - Se monteaza in priza de potenţial conform desene proiect; - Grad de protectie: IP65; - Certificare pentru mediu cu pericol de explozie: grupa II zona II; Temperatura maximă de suprafata corespunzătoare clasei T4.	
3.	Condiţii privind conformitatea cu standarde relevante: - SR EN 60079-14, EN 50164-3, DIN IEC60068-1.	Condiţii privind conformitatea cu standarde relevante: - SR EN 60079-14, EN 50164-3, DIN IEC60068-1.	
4.	Condiţii de garanţie şi postgaranţie: - Producătorul va garanta calitatea şi buna funcţionare a produsului timp de 24 luni de la punerea în funcţiune sau de 36 luni de la data livrarii. - Produsul va corespunde normelor tehnice şi standardelor europene.	Condiţii de garanţie şi postgaranţie: - Producătorul va garanta calitatea şi buna funcţionare a produsului timp de 24 luni de la punerea în funcţiune sau de 36 luni de la data livrarii. - Produsul va corespunde normelor tehnice şi standardelor europene.	
5.	Condiţii cu caracter tehnic: - Nu vor fi luate în consideraţie decât ofertele însoţite de documentaţie completă pentru selecţie şi montaj în limba română. - Vor fi anexate: • instrucţiuni de montaj (scheme de conectare, broşuri, cataloage); • instrucţiuni de exploatare; • buletine de încercări, verificări, probe; • declaratie de conformitate.	Condiţii cu caracter tehnic: - Nu vor fi luate în consideraţie decât ofertele însoţite de documentaţie completă pentru selecţie şi montaj în limba română. - Vor fi anexate: • instrucţiuni de montaj (scheme de conectare, broşuri, cataloage); • instrucţiuni de exploatare; • buletine de încercări, verificări, probe; declaratie de conformitate.	

Spark gap - FLT-ISG-100-EX - 2905579

Eclator izolator pentru zona periculoasă cu manșon din plastic și șuruburi filetate cu filet M10.
Pentru conectarea / punerea la pământ a pieselor de sistem izolate din punct de vedere operațional în cazul fulgerului.

Caracteristici articol

- Izolarea spațiului de evacuare pentru legarea echipotențială indirectă
- Protecția flanșelor izolatoare în conducte
- Poate fi utilizat in zona 1 de protectie Ex
- Accesorii disponibile pentru conexiunea eclatorului

Date comerciale

Unitate de ambalare	1 BUC
GTIN	4 055626 002446
GTIN	4055626002446
Greutate pe bucată (fără ambalaj)	285,400 g
Cod tarif vamal	73269098
Tara de origine	Germania

Date tehnice

Dimensions

Lungime	100 mm
Diametru carcasa	45.50 mm

Conditii ambientale

Grad de protectie	IP67 (IEC 60529)
Temperatura ambientala (operare)	-20 °C ... 60 °C
Temperatura ambientala (depozitare/transport)	-40 °C ... 60 °C
Altitudine	≤ 2000 m
Umiditate permisa (operare)	95 % (DIN ISO 60068-2-30 metoda 1)

Eclator - FLT-ISG-100-EX - 2905579

Date tehnice

General

Tip montaj	Montaj cu surub
Culoare	Gri RAL 7042
Tip	Modul cu surub
Surge protection fault message	none

Descrieri suplimentare

Nota	Conexiune: surub (DIN 933), M10x25, wrench size: 17 mm, spring washer (DIN 7980), size: 10

Circuit protectie

Curent nominal de descarcare In (8/20) µs 100 kA	
Curent maxim de descarcare Imax (8/20) µs 100 kA	
Tensiune alternativa de raspuns Uaw ≤ 0.5 kV	
Rata rezistenta putere-frecventa Uwac≤ 250 V AC	
Rata rezistenta tensiune curent continuu Uwdc ≤ 354 V CC	
Rata tensiune impuls descarcare Ur imp ≤ 1.25 kV	
Curent de descarcare alternativa nominala	500 A / 0.2 s (la 50/60 Hz, curentul maxim de descarcare in cazul influientelor externe de tensiune la locul de instalare)
Timp de raspuns ta ≤ 100 ns	

Date de conexiune

Nume conexiune FlansaM	
Metoda de conexiune Conexiune cu bolturi	
Filet M10	

Reguli si Standarde

Standarde/reguli	IEC 62561-3 2012
	EN 62561-3 2012

Conformitate / aprobari

ATEX	# II 2 G Ex d IIC T6 Gb
	# II 2 D Ex tb IIIC T80 °C Db IP 66/67
IECEx	Ex d IIC T6 Gb
	Ex tb IIIC T80 °C Db IP66/67

Desene

Eclator - FLT-ISG-100-EX - 2905579

Dimensiune produs

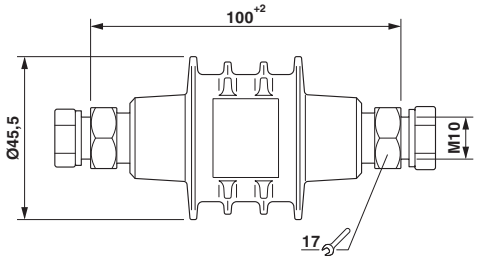

Clasificări

eCl@ss

eCl@ss 5.1	27140201
eCl@ss 6.0	27140201
eCl@ss 7.0	27140201
eCl@ss 8.0	27140201
eCl@ss 9.0	27140201

ETIM

ETIM 4.0	EC000510
ETIM 5.0	EC000510
ETIM 6.0	EC000510

UNSPSC

UNSPSC 13.2	39121620

Aprobări

Aprobări

Aprobări

UL Listed

Aprobări EX

IECEx / ATEX / UL Listed

Detalii de aprobare

UL Listed		http://database.ul.com/cgi-bin/XYV/template/LISEXT/1FRAME/index.htm	FILE E 482435

Spark gap - FLT-ISG-100-EX - 2905579

Accesorii

Accesorii

Material de montaj

Placa de fixare - FLT-ISG-PL-11 - 2905584

Placă pentru fixarea decalajului de izolare FLT-ISG-100-EX pe o flanșă, diametrul găurii de găurire de 11 mm.

Placa de fixare - FLT-ISG-PL-14 - 2905586P

Placă pentru fixarea eclatorului FLT-ISG-100-EX pe o flanșă, diametrul găurii de găurire de 14 mm.

.

Placa de fixare - FLT-ISG-PL-18 - 2905587

Placă pentru fixarea eclatorului FLT-ISG-100-EX pe o flanșă, diametrul găurii de găurire de 18 mm

---

Placa de fixare- FLT-ISG-PL-22 - 2905588

Placă pentru fixarea eclatorului FLT-ISG-100-EX pe o flanșă, diametrul găurii de găurire de 22 mm

---

Placa de fixare - FLT-ISG-PL-26 - 2905745

Placă pentru fixarea eclatorului FLT-ISG-100-EX pe o flanșă, diametrul găurii de găurire de 26 mm

---

Eclator- FLT-ISG-100-EX - 2905579

Accesorii

Placa de fixare- FLT-ISG-PL-33 - 2905747

Plate for fixing the FLT-ISG-100-EX isolating spark gap to a flange, drill hole diameter of 33 mm.

Fixing plate - FLT-ISG-PL-36 - 2905754

Plate for fixing the FLT-ISG-100-EX isolating spark gap to a flange, drill hole diameter of 36 mm.

Fixing plate - FLT-ISG-PL-39 - 2905755

Plate for fixing the FLT-ISG-100-EX isolating spark gap to a flange, drill hole diameter of 39 mm.

Fixing plate - FLT-ISG-PL-42 - 2905756

Plate for fixing the FLT-ISG-100-EX isolating spark gap to a flange, drill hole diameter of 42 mm.

Fixing bracket - FLT-ISG-BR-11 - 2905580

Bracket for fixing the FLT-ISG-100-EX isolating spark gap to a flange, drill hole diameter of 11 mm.

Spark gap - FLT-ISG-100-EX - 2905579

Accesorii

Fixing bracket - FLT-ISG-BR-14 - 2905581

Bracket for fixing the FLT-ISG-100-EX isolating spark gap to a flange, drill hole diameter of 14 mm.

Fixing bracket - FLT-ISG-BR-18 - 2905582

Bracket for fixing the FLT-ISG-100-EX isolating spark gap to a flange, drill hole diameter of 18 mm.

Fixing bracket - FLT-ISG-BR-22 - 2905583

Bracket for fixing the FLT-ISG-100-EX isolating spark gap to a flange, drill hole diameter of 22 mm.

Fixing bracket - FLT-ISG-BR-26 - 2905757

Bracket for fixing the FLT-ISG-100-EX isolating spark gap to a flange, drill hole diameter of 26 mm.

Fixing bracket - FLT-ISG-BR-30 - 2905758

Bracket for fixing the FLT-ISG-100-EX isolating spark gap to a flange, drill hole diameter of 30 mm.

Spark gap - FLT-ISG-100-EX - 2905579

Accesorii

Fixing bracket - FLT-ISG-BR-33 - 2905759

Bracket for fixing the FLT-ISG-100-EX isolating spark gap to a flange, drill hole diameter of 33 mm.

Fixing bracket - FLT-ISG-BR-36 - 2905760

Bracket for fixing the FLT-ISG-100-EX isolating spark gap to a flange, drill hole diameter of 36 mm.

Fixing bracket - FLT-ISG-BR-39 - 2905761

Bracket for fixing the FLT-ISG-100-EX isolating spark gap to a flange, drill hole diameter of 39 mm.

Fixing bracket - FLT-ISG-BR-42 - 2905762

Bracket for fixing the FLT-ISG-100-EX isolating spark gap to a flange, drill hole diameter of 42 mm.

Fixing bracket - FLT-ISG-BR-48 - 2905763

Bracket for fixing the FLT-ISG-100-EX isolating spark gap to a flange, drill hole diameter of 48 mm.

Spark gap - FLT-ISG-100-EX - 2905579

Accesorii

Fixing bracket - FLT-ISG-BR-56 - 2905764

Bracket for fixing the FLT-ISG-100-EX isolating spark gap to a flange, drill hole diameter of 56 mm.

Fixing bracket - FLT-ISG-BR-62 - 2905765

Bracket for fixing the FLT-ISG-100-EX isolating spark gap to a flange, drill hole diameter of 62 mm.

Cablu conexiune - FLT-ISG-CA-100 - 2905589

Cablu conexiune pentru FLT-ISG-100-EX, lungime 100 mm.

Cablu conexiune - FLT-ISG-CA-200 - 2905590

Cablu conexiune pentru FLT-ISG-100-EX, lungime 200 mm.

Cablu conexiune - FLT-ISG-CA-300 - 2905591

Cablu conexiune pentru FLT-ISG-100-EX, lungime 300 mm.

Spark gap - FLT-ISG-100-EX - 2905579

Isolating spark gap for the hazardous area with plastic sleeve and M10 connection thread screws. For indirect connection/grounding of operationally isolated system parts in the event of lightning.

Caracteristici articol

- Isolating spark gap for indirect equipotential bonding
- Protection of insulating flanges in pipelines
- Can be used in Ex protection zone 1
- Accessories for lightning current absorbing connection available

Date comerciale

Unitate de ambalare	1 STK
GTIN	4 055626 002446
GTIN	4055626002446
Greutate pe bucată (fără ambalaj)	285,400 g
Cod tarif vamal	73269098
#ara de origine	Germany

Date tehnice

Dimensions

Length	+2 mm
Diameter housing	45.50 mm

Ambient conditions

Degree of protection	IP67 (according to IEC 60529)
Ambient temperature (operation)	-20 °C ... 60 °C
Ambient temperature (storage/transport)	-40 °C ... 60 °C
Altitude	≤ 2000 m (amsl (above mean sea level))
Permissible humidity (operation)	95 % (According to DIN ISO 60068-2-30 method 1)

Spark gap - FLT-ISG-100-EX - 2905579

Date tehnice

General

Mounting type	Screw mounting
Color	traffic grey A RAL 7042
Type	Screw-on module
Surge protection fault message	none

Additional descriptions

Note	Connection: screw (DIN 933), M10x25, wrench size: 17 mm, spring washer (DIN 7980), size: 10

Protective circuit

Nominal discharge current I_n (8/20) µs	100 kA
Maximum discharge current I_{max} (8/20) µs (Shield-Earth)	100 kA
Alternating voltage response U_{aw}	≤ 0.5 kV
Rated power-frequency withstand voltage U_{wAC}	≤ 250 V AC
Rated DC withstand voltage U_{wDC}	≤ 354 V DC
Rated impulse sparkover voltage $U_{r\ imp}$	≤ 1.25 kV
Rated alternating discharge current	500 A / 0.2 s (at 50/60 Hz, max. discharge current in the event of external voltage influence at the installation location)
Response time t_A	≤ 100 ns

Connection data

Connection name	Flange
Connection method	Connection bolts
Screw thread	M10

Standards and Regulations

Standards/regulations	IEC 62561-3 2012
	EN 62561-3 2012

Conformity / approvals

ATEX	# II 2 G Ex d IIC T6 Gb
	# II 2 D Ex tb IIIC T80 °C Db IP 66/67
IECEx	Ex d IIC T6 Gb
	Ex tb IIIC T80 °C Db IP66/67

Desene

Spark gap - FLT-ISG-100-EX - 2905579

Dimensional drawing

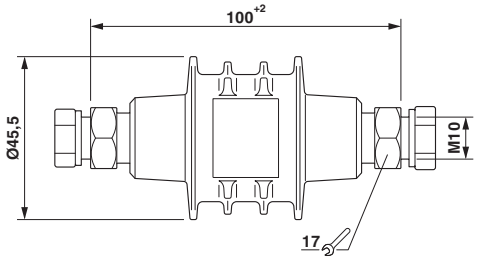

Clasificări

eCl@ss

eCl@ss 5.1	27140201
eCl@ss 6.0	27140201
eCl@ss 7.0	27140201
eCl@ss 8.0	27140201
eCl@ss 9.0	27140201

ETIM

ETIM 4.0	EC000510
ETIM 5.0	EC000510
ETIM 6.0	EC000510

UNSPSC

UNSPSC 13.2	39121620

Aprobări

Aprobări

Aprobări

UL Listed

Aprobări EX

IECEx / ATEX / UL Listed

Detalii de aprobare

UL Listed	UL LISTED	http://database.ul.com/cgi-bin/XYV/template/LISEXT/1FRAME/index.htm	FILE E 482435

Spark gap - FLT-ISG-100-EX - 2905579

Accesorii

Accesorii

Mounting material

Fixing plate - FLT-ISG-PL-11 - 2905584

Plate for fixing the FLT-ISG-100-EX isolating spark gap to a flange, drill hole diameter of 11 mm.

Fixing plate - FLT-ISG-PL-14 - 2905586

Plate for fixing the FLT-ISG-100-EX isolating spark gap to a flange, drill hole diameter of 14 mm.

Fixing plate - FLT-ISG-PL-18 - 2905587

Plate for fixing the FLT-ISG-100-EX isolating spark gap to a flange, drill hole diameter of 18 mm.

Fixing plate - FLT-ISG-PL-22 - 2905588

Plate for fixing the FLT-ISG-100-EX isolating spark gap to a flange, drill hole diameter of 22 mm.

Fixing plate - FLT-ISG-PL-26 - 2905745

Plate for fixing the FLT-ISG-100-EX isolating spark gap to a flange, drill hole diameter of 26 mm.

Spark gap - FLT-ISG-100-EX - 2905579

Accesorii

Fixing plate - FLT-ISG-PL-33 - 2905747

Plate for fixing the FLT-ISG-100-EX isolating spark gap to a flange, drill hole diameter of 33 mm.

Fixing plate - FLT-ISG-PL-36 - 2905754

Plate for fixing the FLT-ISG-100-EX isolating spark gap to a flange, drill hole diameter of 36 mm.

Fixing plate - FLT-ISG-PL-39 - 2905755

Plate for fixing the FLT-ISG-100-EX isolating spark gap to a flange, drill hole diameter of 39 mm.

Fixing plate - FLT-ISG-PL-42 - 2905756

Plate for fixing the FLT-ISG-100-EX isolating spark gap to a flange, drill hole diameter of 42 mm.

Fixing bracket - FLT-ISG-BR-11 - 2905580

Bracket for fixing the FLT-ISG-100-EX isolating spark gap to a flange, drill hole diameter of 11 mm.

Spark gap - FLT-ISG-100-EX - 2905579

Accesorii

Fixing bracket - FLT-ISG-BR-14 - 2905581

Bracket for fixing the FLT-ISG-100-EX isolating spark gap to a flange, drill hole diameter of 14 mm.

Fixing bracket - FLT-ISG-BR-18 - 2905582

Bracket for fixing the FLT-ISG-100-EX isolating spark gap to a flange, drill hole diameter of 18 mm.

Fixing bracket - FLT-ISG-BR-22 - 2905583

Bracket for fixing the FLT-ISG-100-EX isolating spark gap to a flange, drill hole diameter of 22 mm.

Fixing bracket - FLT-ISG-BR-26 - 2905757

Bracket for fixing the FLT-ISG-100-EX isolating spark gap to a flange, drill hole diameter of 26 mm.

Fixing bracket - FLT-ISG-BR-30 - 2905758

Bracket for fixing the FLT-ISG-100-EX isolating spark gap to a flange, drill hole diameter of 30 mm.

Spark gap - FLT-ISG-100-EX - 2905579

Accesorii

Fixing bracket - FLT-ISG-BR-33 - 2905759

Bracket for fixing the FLT-ISG-100-EX isolating spark gap to a flange, drill hole diameter of 33 mm.

Fixing bracket - FLT-ISG-BR-36 - 2905760

Bracket for fixing the FLT-ISG-100-EX isolating spark gap to a flange, drill hole diameter of 36 mm.

Fixing bracket - FLT-ISG-BR-39 - 2905761

Bracket for fixing the FLT-ISG-100-EX isolating spark gap to a flange, drill hole diameter of 39 mm.

Fixing bracket - FLT-ISG-BR-42 - 2905762

Bracket for fixing the FLT-ISG-100-EX isolating spark gap to a flange, drill hole diameter of 42 mm.

Fixing bracket - FLT-ISG-BR-48 - 2905763

Bracket for fixing the FLT-ISG-100-EX isolating spark gap to a flange, drill hole diameter of 48 mm.

Spark gap - FLT-ISG-100-EX - 2905579

Accesorii

Fixing bracket - FLT-ISG-BR-56 - 2905764

Bracket for fixing the FLT-ISG-100-EX isolating spark gap to a flange, drill hole diameter of 56 mm.

Fixing bracket - FLT-ISG-BR-62 - 2905765

Bracket for fixing the FLT-ISG-100-EX isolating spark gap to a flange, drill hole diameter of 62 mm.

Connecting cable - FLT-ISG-CA-100 - 2905589

Connecting cable for FLT-ISG-100-EX, length 100 mm.

Connecting cable - FLT-ISG-CA-200 - 2905590

Connecting cable for FLT-ISG-100-EX, length 200 mm.

Connecting cable - FLT-ISG-CA-300 - 2905591

Connecting cable for FLT-ISG-100-EX, length 300 mm.

FIȘĂ TEHNICĂ E-CI - Centrala semnalizare incendiu adresabilă

Nr Crt.	Specificațiile tehnice impuse prin Caietul de sarcini	Corespondența propunerii tehnice cu specificațiile tehnice impuse prin Caietul de sarcini	Producător
0	1	2	3
1.	**Parametrii tehnici şi funcţionali:** - Centrală alarmă incendiu convențional-adresabilă; - Maxim 128 dispozitive adresabile/centrala; - Material carcasa: metalica/policarbonat - Panou de comanda cu LED-uri (sau, si cu LCD); - Număr zone de intrare pe placa: min. 8; - Memorie evenimente: min. 1000 evenimente; - Posibilitatea de preluare in centrala a semnalelor de la detectorii de gaz metan; - Posibilitate de dezactivare a diferitelor zone; - Funcție de dezactivare a sirenei; - Coduri utilizator: multiple, din care: 1 cod principal (master) 1 cod de mentenanță; - Funcție de autoadresare; - Alimentare principala: 230VAC 50Hz-15/+10%; - Sursa back-up: acumulatori calculați conform proiect - Umiditate: Max 95% fără condensare;	**Parametrii tehnici şi funcţionali:** - Centrala alarma incendiu convențional-adresabilă; - 128 dispozitive adresabile/centrala; - Material carcasa: metalica/policarbonat - Panou de comanda cu LED-uri si cu LCD; - Număr zone de intrare pe placa: 32; - Memorie evenimente: 4000 evenimente; - Posibilitatea de preluare in centrala a semnalelor de la detectorii de gaz metan; - Posibilitate de dezactivare a diferitelor zone; - Funcție de dezactivare a sirenei; - Coduri utilizator: multiple, din care: 1 cod principal (master) 1 cod de mentenanță; - Funcție de autoadresare; - Alimentare principala: 230VAC 50Hz-15/+10%; - Sursa back-up: acumulatori calculați conform proiect - Umiditate: Max 95% fără condensare;	**BENTEL SECURITY**
2.	**Specificaţii de performanţă şi condiţii privind siguranta în exploatare:** - Programare soft de la tastatura (panou frontal); - Autotestare si autodiagnosticare: indicare a stării sistemului; - Va comunica starea de alarma către centrala de efracție sau către un sistem superior; - Centrala va prelua din camp semnale de alarma de la toate echipamentele (butoane de incendiu, detectori de flacara de gaz și fum, etc) și le va transmite in PLC; - Va transmite în PLC starea de defect; - Funcționare toleranta la întrerupere si scurtcircuit a buclei; - Dispozitive de alarmare alimentate de pe bucla, conforme EN 54-3 cu tonuri integrate de semnalizare conforme DIN 33404;	**Specificaţii de performanţă şi condiţii privind siguranta în exploatare:** - Programare soft de la tastatura (panou frontal); - Autotestare si autodiagnosticare: indicare a stării sistemului; - Va comunica starea de alarma către centrala de efracție sau către un sistem superior; - Centrala va prelua din camp semnale de alarma de la toate echipamentele (butoane de incendiu, detectori de flacara de gaz și fum, etc) și le va transmite in PLC; - Va transmite în PLC starea de defect; - Funcționare toleranta la întrerupere si scurtcircuit a buclei; - Dispozitive de alarmare alimentate de pe bucla, conforme EN 54-3 cu tonuri integrate de semnalizare conforme DIN 33404;	
3.	**Condiţii privind conformitatea cu standarde relevante:** - Conform standardelor EN 54-2 si EN 54-4	**Condiţii privind conformitatea cu standarde relevante:** - Conform standardelor EN 54-2 si EN 54-4	
4.	**Condiţii de garanţie şi postgaranţie:**	**Condiţii de garanţie şi postgaranţie:**	

	- Producătorul va garanta calitatea şi buna funcţionare a produsului timp de 24 luni de la punerea în funcţiune sau de 36 luni de la data livrarii. - Ofertantul va trebui să intervină în maxim 48 de ore în perioada de garanție la defectarea centralei; - Se vor preda softurile de programare a centralei; - Produsul va corespunde normelor tehnice şi standardelor europene.	- Producătorul garantează calitatea şi buna funcţionare a produsului timp de 24 luni de la punerea în funcţiune sau de 36 luni de la data livrarii. - Ofertantul va trebui să intervină în maxim 48 de ore în perioada de garanție la defectarea centralei; - Se vor preda softurile de programare a centralei; - Produsul va corespunde normelor tehnice şi standardelor europene.	
5.	**Condiţii cu caracter tehnic:** - Nu vor fi luate în consideraţie decât ofertele însoţite de documentaţie completă pentru selecţie şi montaj în limba română. - Vor fi anexate: ▪ instrucţiuni de montaj (scheme de conectare, broşuri, cataloage); ▪ instrucţiuni de exploatare; ▪ buletine de încercări, verificări, probe; ▪ declaratie de conformitate.	**Condiţii cu caracter tehnic:** - Nu vor fi luate în consideraţie decât ofertele însoţite de documentaţie completă pentru selecţie şi montaj în limba română. - Vor fi anexate: ▪ instrucţiuni de montaj (scheme de conectare, broşuri, cataloage); ▪ instrucţiuni de exploatare; ▪ buletine de încercări, verificări, probe; ▪ declaratie de conformitate.	

FC501 Addressable Fire Control Panels

The FC501 easy-to-programme control panel has a 4-line, 40 character per line, LCD module display with a backlight, which provides written information regarding the system status, such as temperature, CO level, and smoke level, and is also used for programming the control panel.

The front panel controls enable text and configuration changes.

The FC501 auto-addressing panel has 3 in 1 loops that can support up to 128 addressable devices and 32 zones.

There are two versions available (1.8A or 2.7A power supply), as well as an optional IP board.

Figure 1: FC501 addressable fire control panel with FC500 repeater

Specifications

- The encolsure and front door are plastic.
- H x W x D: 369mm x 335mm x 115mm

Features

Additional Panel Features

- Up to 400mA current dynamically shared across 3 circuits in 1 loop
- Auto mapping with Intelli-Zone feature
- Online Help function
- USB interface dual role Host/Device
- Multi users and multi installers (Up to 2 installers, 8 users)
- Walk test function
- 4000 Event Log
- Loop break location
- On board PSTN communicator
- GSM/GPRS as external module
- Up to 4 repeaters and multifunction interfaces for printer / simplified fire brigade panels
- Event transmission through PSTN and IP
- Automatic drift compensation

Software Features

- Fast and simple system configuration, also offline
- Transferable user database
- Device graphic displayed
- Battery and wiring calculation
- Customizable cables database
- Visualization of all the devices assigned to a single zone
- Remote real time visualization of control panel loop and zone status, and so on.
- Easy Remote user interface with control buttons (reset, silence, evacuate)
- Multilevel map based on a tree structure
- Access device data from any pages of the map
- Configuration downloadable to USB memory stick
- Capability to print zone label sheet for front panel customization

Ordering information

Table 1: Product and accessories ordering information

Order number	Product details
Variants	
557.200.719	**FC501-L**: Triple Circuit Single Loop Panel Icons - 1,8A PSU
557.200.718	**FC501-H**: Triple Circuit Single Loop Panel English - 2,7A PSU
557.200.720	**FC501-HK**: Triple Circuit Single Loop Panel - 2,7A PSU, Icons
Accessories: SKU Description	
508.031.742	**FC500MFI**: Multifunctional Interface
508.031.743	**FC500IP3:** IP Module
508.032.036	**FC500BX**: Cabinet for Spare 38Ah Batteries
508.032.037	**USB 5m**: USB 5m cable type A
508.032.042	**FC500DISP**Spare Display
557.202.726	**FC-MAE**: FC500 Panels Monitoring Software
557.200.727	**FC500** FireClass Repeater

Performance characteristics

Table 2: Performance characteristics

	FC501-L	FC501-H and FC501-HK	FC500
Dimensions H x W x D mm	369 x 335 x 115		234 x 345 x 55.7
Weight	3 kg		2.7kg
Operating Temp	-5ºC ÷ 40ºC		
Storage Temp	-40 ÷ 80 °C		
Humidity	Up to 95% Non Condensing		
Supply Voltage	230VaC 50Hz - 15/+10%		19 Vdc - 30 Vdc
PSU Imax	1,8A	2,7A	130 mA (dc)
Aux output rated voltage	27,6 Vdc	27,6 Vdc	NA
Max Battery Size	12 Ah	12Ah - 38Ah external box	NA
Loop Power	200mA	400mA	NA
IP Rating	IP30		IP30
Enclosure colour (cabinet and door)	RAL 7035		

Approvals

Table 3: Approvals

	CE 0051 19 Tyco Fire & Security GmbH, Victor von Bruns-Strasse 21, 8212 Neuhausen am Rheinfall, Switzerland.	CPR Approval				European Type Approvals					International Listings		
		EN 54-2	EN 54-4	EN 54-21	MED	LPCB	VDS	AFNOR	FNO	SB SC	FP ANZ	HK FSD	TFTF
FC501-L	DoP-2015-4218	x	x	x									
FC501-H FC501-HK	DoP-2015-4219	x	x	x									
FC500IP in FC501-L FC501-H FC501-HK	DoP-2015-4211			x									

All required Declarations and certificates are publically available on the website www.fireclass.net and are searchable by number or model name. The above fire detection products are components designed for use in Addressable Systems exclusively available to registered partners only. They are intended for installation by trained registered personnel only. Systems should be installed and configured according to local regulations.

Comparision of FC501, FC503, and FC506 features

Table 4: Comparison of FC501, FC503, and FC506 features

Feature	FC501	FC503	FC506
Addressable loops			
No. of Loops	1 Loop	1 Loop	2 Loops
Loop Splitter / Sub-Loops	3	3	6
Max Current Draw per Loop	0.5A*	1A*	1A*
No. of Devices	128	250	500
Outputs			
Fault	1	1	1
Fire	1	1	1
Programmable Open collector Outputs	2	2	2
USB Interface	1	1	1
RS232 Interface	1	1	1
RS485 Interface	1	1	1
24V (for RS485 Devices)	1 , Max Current: 0.5 A	1 , Max Current: 1 A	1 , Max Current: 1 A
24 V Auxiliary	1 , Max Current: 0.5 A	1 , Max Current: 1 A	1 , Max Current: 1 A
24V Resettable	1 , Max Current: 0.5 A	1 , Max Current: 1 A	1 , Max Current: 1 A
Sounder / NAC Outputs	2 , Max Current: 0.5 A per NAC	2 , Max Current: 0.5 A per NAC	2 , Max Current: 0.5 A per NAC
Power supply			
AC Mains Voltage	230Vac -15%/+10%, 50-60Hz		
PSUs	BAW75T24 (27.6V, 2.7A)	BAQ140T24 (27.6V, 5.5 A)	BAQ140T24 (27.6V, 5.5 A)
Maximum Battery Size (Inside Panel)	2 (12A/h)	2 (17A/h)	2 (17A/h)
Maximum Battery Capacity	38 Ah	38 Ah	38 Ah
Battery Optional Box	YES	YES	YES
Panel Cabinet	Plastic Box	Metal Box, Plastic Door	Metal Box, Plastic Door
Management software			
Software	FireClass console	FireClass console	FireClass console

Table 4: Comparison of FC501, FC503, and FC506 features

Feature	FC501	FC503	FC506
Communication Channels	RS232, USB, RS485,IP	RS232, USB, RS485,IP	RS232, USB, RS485,IP
SW Zones	32	128	256
Number of zonal LEDs	8	8	8
Auto Addressing	YES	YES	YES
Events logged	4000	4000	4000
FC500 MFI Interface	4	4	4
FC500 Repeaters	4	8	8
FC500 Clients	No Support	7	7
Standard compliance			
EN54-2	x	x	x
EN54-4	x	x	x
EN54-21	x	x	x
Communicators			
PSTN (Voice, Data)	On Board	On Board	On Board
IP	FC500IP (Add On)	FC500IP (Add On)	FC500IP (Add On)

Note: *Absolute maximum value, the panel displays a warning on the screen when the current exceeds 80% of the maximum value.

FIȘĂ TEHNICĂ E-DG - Detector de gaz metan

Nr Crt.	Specificațiile tehnice impuse prin Caietul de sarcini	Corespondența propunerii tehnice cu specificațiile tehnice impuse prin Caietul de sarcini	Producător
0	1	2	3
1.	**Parametrii tehnici şi funcţionali:** - Material carcasa: ABS plastic UV stabilizat; - Sistem adresabil; - Umiditate relativa: 20-90% (fără condens); - Conexiune electrica: terminale cu șurub; - Valoare minima de detecție: minim 5% L.E.L.; - Interval de alarmare 20%-50% L.E.L.; - Detectează gazele pe principiul analizei aerului; - Algoritmi avansați de detecție si discriminare; - Instalare si întreținere ușoară; - LED dual, pentru vizibilitate 360 grade; - N/C (normal/închis)-N/O (normal/deschis) - ieșire selectabila de releu; - Compatibil cu centrala de incendiu;	**Parametrii tehnici şi funcţionali:** - Material carcasa: ABS plastic UV stabilizat; - Sistem adresabil; - Umiditate relativa: 20-90% (fără condens); - Conexiune electrica: terminale cu șurub; - Valoare minima de detecție: minim 5% L.E.L.; - Interval de alarmare 20%-50% L.E.L.; - Detectează gazele pe principiul analizei aerului; - Algoritmi avansați de detecție si discriminare; - Instalare si întreținere ușoară; - LED dual, pentru vizibilitate 360 grade; - N/C (normal/închis)-N/O (normal/deschis) - ieșire selectabila de releu; - Compatibil cu centrala de incendiu;	**ESIWELMA**
2.	**Specificaţii de performanţă şi condiţii privind siguranta în exploatare:** - Conform caiet de sarcini	**Specificaţii de performanţă şi condiţii privind siguranta în exploatare:** - Conform caiet de sarcini	
3.	**Condiţii privind conformitatea cu standarde relevante:** - SR EN 60529 grade de protecție	**Condiţii privind conformitatea cu standarde relevante:** - SR EN 60529 grade de protecție	
4.	**Condiţii de garanţie şi postgaranţie:** - Producătorul va garanta calitatea şi buna funcţionare a produsului timp de 24 luni de la punerea în funcţiune sau de 36 luni de la data livrarii. - Produsul va corespunde normelor tehnice şi standardelor europene.	**Condiţii de garanţie şi postgaranţie:** - Producătorul va garanta calitatea şi buna funcţionare a produsului timp de 24 luni de la punerea în funcţiune sau de 36 luni de la data livrarii. - Produsul va corespunde normelor tehnice şi standardelor europene.	
5.	**Condiţii cu caracter tehnic:** - Nu vor fi luate în consideraţie decât ofertele însoţite de documentaţie completă pentru selecţie şi montaj în limba română. - Vor fi anexate: • instrucţiuni de montaj (scheme de conectare, broşuri, cataloage); • instrucţiuni de exploatare; • buletine de încercări, verificări, probe; • declaratie de conformitate.	**Condiţii cu caracter tehnic:** - Nu vor fi luate în consideraţie decât ofertele însoţite de documentaţie completă pentru selecţie şi montaj în limba română. - Vor fi anexate: • instrucţiuni de montaj (scheme de conectare, broşuri, cataloage); • instrucţiuni de exploatare; • buletine de încercări, verificări, probe; • declaratie de conformitate.	

EsiWelma®
a Navim Group Company

Sensigas®

Detectoare de gaze

Grad de protecție IP55

UR.20.L

Alimentare 11...28Vdc. Element de detectare Pellistor (versiunea S (standard) sau P (profesională) sau Semiconductor (versiunea T) pentru gaze inflamabile; Celulă electrochimică (versiunea S sau P) sau semiconductor (versiunea T) pentru gaze toxice. Până la trei praguri de alarmă. Led pe elementul senzor pentru indicarea stării de funcționare.
Numărătoare inversă automată a duratei de viață a senzorului.

Utilizare

Senzorii UR.20.L sunt utilizați pentru a detecta prezența metanului, GPL, monoxid de carbon (CO), vapori de benzină, acetilenă, hidrogen, amoniac, propan, octan, etanol (alte gaze la cerere) în încăperile de încălzire, parcări și industria ușoară zone.
Senzorii UR.20.L pot fi utilizați în modul de sine stătător cu ieșire 4...20mA sau cu un card de releu de contact fără tensiune opțional având următoarele 4 ieșiri digitale:
Pre-alarma, primul prag de alarmă, al 2-lea prag de alarmă, eroare senzor.

Operațiune

În cazul unei scurgeri de gaz, senzorul compară valoarea concentrației măsurată cu pragurile de alarmă prestabilite, pornind releele relevante.
Informațiile despre valoarea concentrației măsurate sunt întotdeauna la ieșirea 4...20mA.

Comanda

Pur și simplu indicați codul produsului: vă rugăm să consultați „modele disponibile”.

Modele disponibile

Cod: UR () yy z L

- L= grad de protectie IP55
- Tipul elementului senzorial:
  P= Pisica Profesionala; S = Cat. standard; T = Semiconductor cu funcționare în prag
- Sistem bazat pe magistrală „40” sau „52”, cum ar fi EW40 sau EW52
  „20” pentru detectoare independente cu ieșire 4...20 mA și 4 relee VFC opționale de ieșire
- G= Metan; P= GPL; O= Monoxid de carbon; B= vapori de benzină; L = Acetilena;
  I = Hidrogen; M = amoniac; C= propan; T = octan; E = alcool etilic; S= oxigen;
  D = dioxid de carbon; X= Xilen; A = acetonă; H = hexan; Q= Ciclo-Hexan; T= Toluen; N= Pentan; U=Butan;
  F= Heptan; K=Etan; J = etanol; V= metanol; Z= benzen;
  Y = acetat de etil; W = cianura de hidrogen; HS= acid sulfuric; HC= Acid clorhidric;
  CL= Clor; N1= Monoxid de azot; N2= Dioxid de azot; N3= protoxid de azot;
  HY=Hidrocarburi.

Modele la cerere

Pentru alte gaze, vă rugăm să contactați Serviciul Clienți.

Caracteristici tehnice

Element Senzor	Pellistor sau Semiconductor	Celulă electrochimică sau semiconductor
Gaz detectabil (vezi modelele disponibile)	Gaz exploziv	Gaz Toxic
Alimentare electrică	11÷28Vdc	11÷28Vdc
Consum maxim de energie	3.2W 0...	1,5W
Raza de masurare	100% LEL	0...500 ppm
Precizie (Pellistor sau celulă electrochimică)	5% scară completă,	10% citire
Precizie (semiconductor)	10% scară completă (la punctul de calibrare)	
Repetabilitate	5% din scara maximă,	10% citire
Rezoluția măsurătorilor	1% LIE 5 ppm	
Rezoluția microprocesorului	1024 puncte (10 biți)	1024 puncte (10 biți)
Tehnica de filtrare digitală	Filtrul Kalman	Filtrul Kalman
Câine de pază	Intern	Intern
Timp de încălzire	< 2m	< 2m
Timp de stabilizare	< 2m	< 2m
Timp de raspuns	< 20 s (T50), < 60 s (T90)	
Durata medie de viață a senzorului (în aer)	255 săptămâni	255 săptămâni
Tip semnal de ieșire:		
Ieșire proporțională (Mod implicit)	- 4mA = 0% LEL; 0 ppm - 20mA = 100% LEL; 500 ppm	
Ieșire în pas (aplicații de prag)	- 0mA = fără alarmă - 10mA = primul prag de alarmă - 20mA = al 2-lea prag de alarmă	
Selectarea referințelor de ieșire	Prin jumperi la referința negativă sau pozitivă a sursei de alimentare	
Rezistor de sarcină de ieșire 4...20mA	- Pana la 200 @ 12Vdc sursa de alimentare - sursa de alimentare 200 700 @ 24Vdc	
Temperatură de lucru	-20 50 °C	
Temperatura de depozitare	-20 70 °C	
Umiditate relativă (fără condensare)		
- Operațiune	15 90 %RH	
- Depozitare	45 75 %RH	
Presiune de funcționare	80 110 KPa	
Viteza aerului Semnal	6 m/s	
optic Greutate și	LED roșu vizibil pe corpul senzorului	
dimensiuni Opțiuni și accesorii	Vezi paragraful dedicat	
Card SPDT cu 4 relee UZR20.4	(Valori implicite:)	
Contact disponibil NU sau NC, jumperi selectabili.	Releul A: pre-alarma 10% LEL, 50 ppm Releul B: 1 - a alarmă de prag 20% LEL, 100 ppm Releul C: al 2-lea prag de alarmă 40% LEL, 200 ppm Releul D: Eroare senzor	
Cardul este prevazut si cu 4 led-uri si 4 borne detasabile (una pentru fiecare releu).	Pragurile de alarmă sunt de asemenea selectabile prin comutatorul DIP sau prin terminalul de service și întreținere. Vezi capitolul instalare și pornire.	
Sarcina maximă a releului:	50mA @ 24Vac/dc, 100mA @ 12Vac/dc	
Mod de funcționare releu:	- Direct: Releu ON după eveniment - Reverse: releu pornit fără eveniment	
Kit calibrare gaz TUL40..	Vezi capitolul instalare și pornire	
Terminal de service și întreținere + card de comunicare TUS40	Vezi capitolul instalare și pornire	
Con de colectare gaz CRG40	Vezi fișa tehnică dedicată	
Protecție puternică împotriva jeturilor PAP40	Vezi fișa tehnică dedicată	
Conformitate CE		
Directiva / Standarde EMC	Directiva de compatibilitate electromagnetică 2014/30/EU / EN50270 / EN 61326-1	
Directiva / Standarde LVD	Nu se aplică	

Durata de viață a senzorilor

Durata medie de viață a senzorului (vezi caracteristicile tehnice) se referă la o utilizare tipică într-un mediu fără poluare. Prezența unei concentrații mari de poluanți poate scurta durata de viață a elementului de detectare.

Odată ce sistemul de detectare pornește, acesta trebuie să fie alimentat cu energie pe toată durata de viață a senzorilor săi.

Utilizarea sezonieră a sistemului de detectare nu este recomandată.

Instalare

Pentru instalarea senzorilor, urmați regulile ca în diagramă:

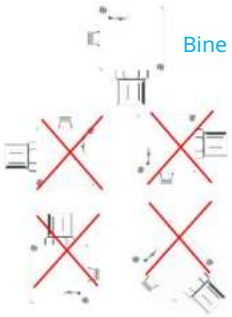

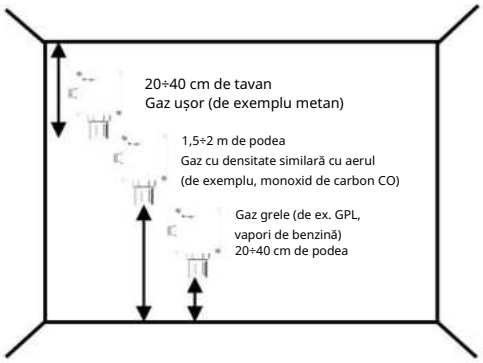

Următoarele reguli pentru instalarea detectorilor sunt strict recomandate:

1. unde sunt posibile scurgeri accidentale de gaze
2. la cel puțin 1,5 m distanță de orice sursă de căldură sau punct de ventilație puternică
3. nu în spații în care ventilația este slabă și se pot forma buzunar de gaz
4. departe de orice poate împiedica curgerea naturală a gazului
5. departe de aparate care pe tot parcursul funcționării lor normale pot avea scurgeri funcționale de gaze
6. in spatii in care temperatura este intre -20°C si 50°C si umiditatea relativa mai mica de 90% (fara roua)

7. se montează și se demontează detectorul numai când nu există tensiune.

Cantitățile de detectoare care trebuie instalate într-o încăpere sunt proporționale cu înălțimea și suprafața încăperii în sine.

Acest parametru depinde de o gamă largă de variabile, motiv pentru care graficul următor nu este o regulă, ci un simplu ajutor pentru instalarea detectoarelor de gaze ușoare

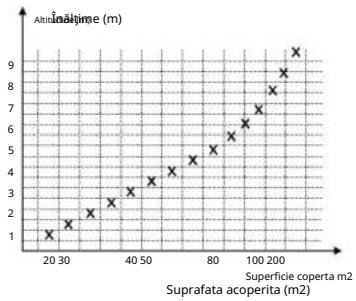

Acoperire media în m2	Zone cu geometrie normală		Zone cu geometrie deosebită (grinzi, tavane, puțuri, bariere la difuzia gazului)	
Tip senzor	Gaz ușor	Gaz grele	Gaz ușor	Gaz grele
Standard Pellistor	80...100	50...80	50...80	30...50
Electrochimic Celulă	100...300		60...150	

Compatibilitate cu mediul înconjurător și eliminarea

Acest produs a fost proiectat și construit folosind materiale și procese care țin cont de problema de mediu. Consultați următoarele note pentru eliminarea produsului la sfârșitul duratei de viață sau când este înlocuit:

- în scopul eliminării, acest produs este clasificat ca dispozitiv electric și electronic: nu îl aruncați împreună cu deșeurile menajere normale, în special în ceea ce privește circuitul imprimat
- respectă toate legile locale în vigoare
- pe cât posibil reutilizați materialele de bază pentru a menține impactul asupra mediului la minimum
- folosiți depozitele locale și companiile de reciclare a deșeurilor sau contactați furnizorul sau producătorul pentru a returna produsele uzate sau pentru a solicita informații despre compatibilitatea cu mediul și eliminarea deșeurilor
- ambalajul produsului poate fi refolosit. Păstrați-l pentru utilizare ulterioară sau pentru a returna produsul la furnizor

Instalatie electrica

AVERTISMENT: înainte de a manipula cablurile și de a configura sistemul, asigurați-vă că nu există tensiune și că zona este sigură.

Instalați senzorul în conformitate cu standardele locale.
Pentru a introduce cabluri, utilizați presetupa furnizată pe carcasă.
Mantaua cablului nu poate fi mai mare de 8 mm.
Împământați senzorul prin sistemul de împământare corespunzător de pe carcasă.

Placă de borne și conexiuni electrice

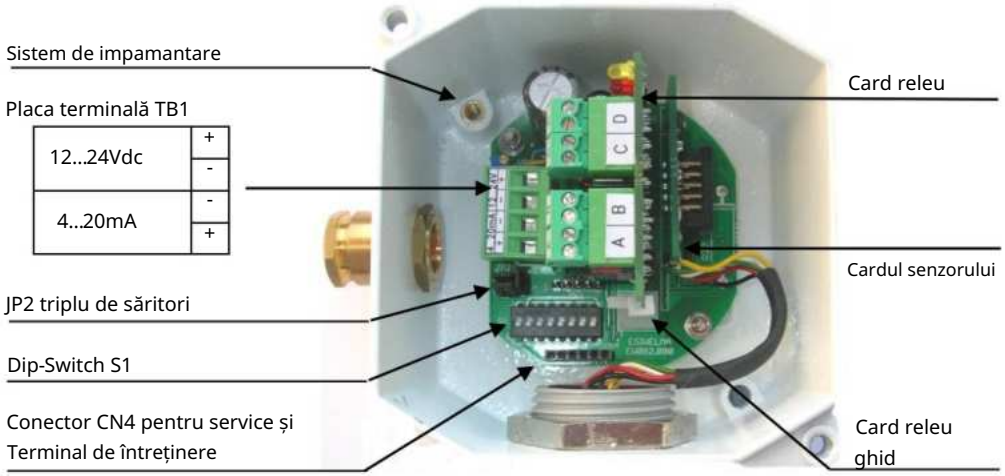

Cabluri:

În funcție de distanța de conectare, utilizați cel puțin un cablu cu 3 conductori, min. secțiunea cablurilor 0,75mm2 până la 100m, 1mm2 până la 200m, 1,5mm2 până la 500m.
În caz de zgomot electromagnetic, utilizați un cablu ecranat.
Dacă se utilizează un card releu, trebuie furnizat un cablu multiplu potrivit pentru numărul de conexiuni.

Configurare:

Setările implicite ale senzorului sunt prezentate în capitolul „Date tehnice”.
Pentru a modifica setările implicite, opriți sursa de alimentare, introduceți noi setări folosind jumperii tripli JP2 sau comutatorul S1 prezentat în figură și reporniți sursa de alimentare; în special:

4...20mA Selectare referință de ieșire:

Selectarea referințelor de ieșire trebuie făcută prin jumperii triplu JP2; pentru a schimba această setare, operatorul trebuie să mute jumperii JP2 așa cum se arată în figură:

Referință negativă (implicit)

Referință pozitivă

AVERTISMENT: dacă se modifică setarea implicită, polaritatea semnalului de ieșire pe TB1 borna, va fi inversată.

4...20mA Configurație tip semnal de ieșire:

Pentru a seta tipul de semnal de ieșire 4...20mA, operatorul trebuie să folosească al 5 -lea selector al comutatorului DIP în poziția S1 , în special:

Ieșire proporțională (4...20mA)

Ieșire în trepte (0-10-20mA)

Setări ale pragurilor de alarmă:

Pentru a seta pragurile de alarmă ale cardului releu opțional, operatorul trebuie să folosească primele 4 selectoare ale comutatorului S1 .
În special, pragurile, afișate în procente din gama completă, vor fi:

(*) Când primele 4 selectoare ale comutatorului DIP sunt în poziția OPRIT, pragurile de alarmă pot fi setate de Terminalul de service și întreținere TUS40 .
De îndată ce această selecție este setată, detectorul preia setările implicite ca praguri de alarmă.
Pentru a seta pragurile de alarmă de către terminalul de service și întreținere TUS40 , consultați broșura de instrucțiuni dedicată.

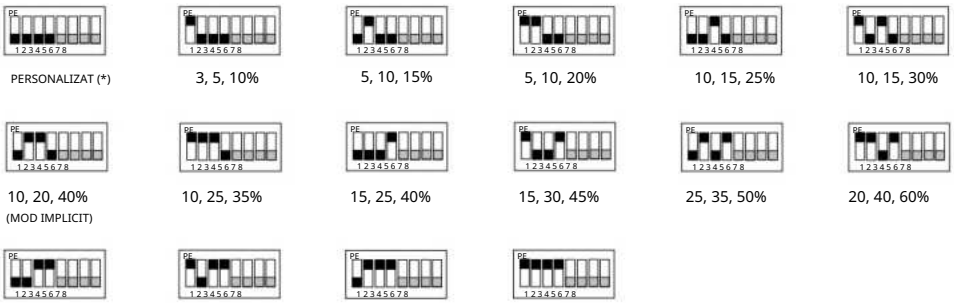

Instalare card releu

Printr-un conector numit CN3, amplasat pe cardul principal, se poate adauga un card cu 4 relee SPDT si led rude, asociate urmatoarelor conditii functionale: prealarm, alarma 1 prag, alarma 2 prag si defect senzor.
Cum se instalează cardul:

Faza 1:

Introduceți ghidajul cardului releu pe cardul principal.

Atenție că steagul elastic este orientat către placa de borne principală TB1.

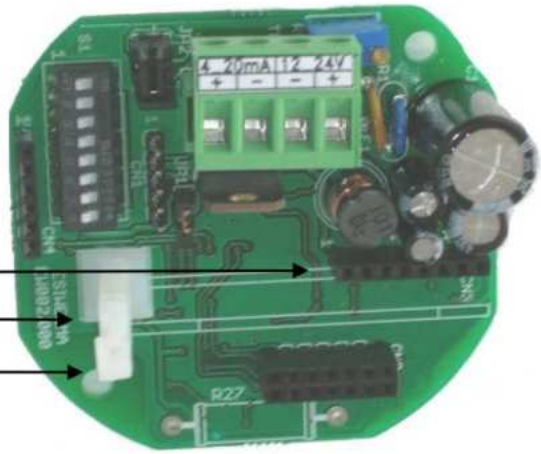

Faza 2:

Introduceți cardul releu și acordați atenție să trageți steagul elastic către placa de borne principală TB1.

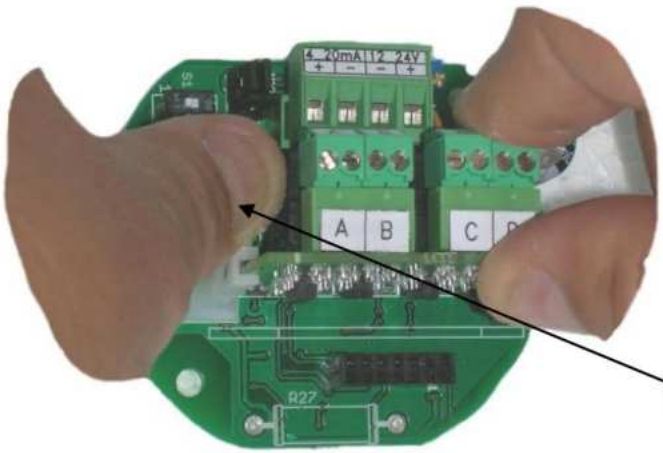

Faza 3:

Verificați poziția cardului releu.
Acordați atenție că toți pinii sunt în conectorul CN3 și că acel card este plasat și fixat corespunzător de steag elastic.

Faza 4:

Bifați caseta de selectare corespunzătoare folosind un marcator permanent.

Cartelă releu electrică Instalare

După instalarea mecanică a cardului de releu, operatorul trebuie să asigure configurarea acestuia selectând tipul de contact (NO sau NC) disponibil pe fiecare placă de borne și modul de funcționare directă sau inversă a releului.

Selectarea tipului de contact:

Pentru fiecare releu sunt disponibile câteva terminale.
Utilizați jumperul JP1...JP4 pentru a selecta tipul de contact.

Contact NC sau NO al releului de pre-alarma
Contact NC sau NO al primului releu de prag
Contact NC sau NO al celui de-al doilea releu de prag
Contact NC sau NO al releului de eroare a senzorului

DL1 (galben), DEFECTAREA senzorului

DL2 (roșu), al 2 - lea prag de alarmă

DL3 (roșu), Primul prag de alarmă

DL4 (roșu), Prealarma

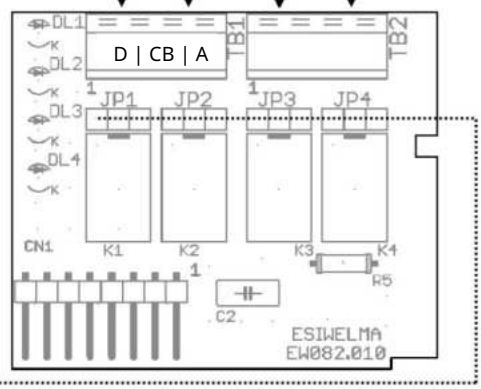

Tip de selecție de contact (JP1 JP4):

NC NU

Mod de operare direct sau invers:

Pentru a selecta modul de funcționare al releelor, operatorul trebuie să folosească al 6 -lea selector al comutatorului DIP în poziția S1 , în special:

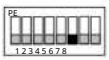

Mod de operare direct:
(releu alimentat de eveniment)

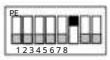

Mod de funcționare inversă:
(releu alimentat fără eveniment)

Verificare preliminara dupa instalatia mecanica si electrica

Senzorii sunt calibrați din fabrică și, în mod normal, nu au nevoie de nicio altă calibrare odată instalați. În orice caz, după instalare se recomandă o verificare funcțională a senzorilor.

Pornirea detectorului va avea loc o fază de preîncălzire de 2 minute. După acest timp senzorul va comuta în modul normal de funcționare, dar cele mai bune performanțe vor fi atinse după cel puțin 2 ore.

Când detectorul funcționează complet, răspunsul la gaz trebuie verificat folosind TUL40..
Kit de calibrare a gazului. Acest kit contine:

- 1 sticlă de gaz calibrat: 50% din LEL pentru gaz exploziv sau la 500 ppm de CO; (vezi codurile de comandă din broșura de instrucțiuni specifice)
- supapă de presiune/adaptor și debitmetru
- adaptor senzor cap
- aproximativ 2 metri de teava.

În timpul testului, operatorul trebuie să verifice valoarea curentului de ieșire 4...20mA, starea led-ului de pe corpul senzorului și, dacă este instalat, starea led-ului de pe cartela releului (capacul trebuie îndepărtat).

LED-ul de stare de pe corpul senzorului și ieșirea 4...20mA au următoarea semnificație funcțională:

Mod de funcționare senzor 4...20mA	Ieșire 2mA	LED de stare pe corpul senzorului
PREÎNCĂLZIRE		Clipește la 2 Hz
OPERATIE NORMALA	4...20mA	1 Clipește la fiecare aproximativ 10 secunde.
PREALARMA	0,10,20mA pentru	2 Clipește la fiecare aproximativ 5 secunde.
PRAGUL DE ALARMĂ 1. PRAGUL	prag	3 Clipește la fiecare aproximativ 5 secunde
DE ALARMĂ 2	aplicatii	4 Clipește la fiecare aproximativ 5 secunde
DEFECTAREA SENSORULUI	22mA	Lumină fixă

Verificare preliminara dupa instalatia mecanica si electrica (continua)

Aplicând amestecul calibrat de gaz la 50% din LEL (sau la 500 ppm de CO) cu ajutorul kit-ului de calibrare a gazului, verificați dacă semnalul de ieșire 4...20mA este inclus de la 10,5 la 13,5mA (de la 18,5). la 21 mA pentru CO).
În același mod, ledul de stare de pe corpul senzorului și releul de pre-alarmă, 1 și 2
pragul de alarmă, al cardului de releu opțional , se pornește ca urmare a setării pragurilor.

întreținere

La fiecare trei/șase luni, trebuie efectuată o verificare funcțională a senzorului.

Rutină

Verificarea de rutină asigură același test descris în capitolul „verificare preliminară după instalarea mecanică și electrică”.

corectiv

Pentru orice anomalie constatată în timpul întreținerii periodice a senzorilor, operatorul trebuie să trimită senzorul înapoi furnizorului, care la rândul său îl va returna producătorului. Pentru a corecta orice anomalie de calibrare găsită în timpul întreținerii periodice a senzorilor, operatorul poate folosi TUL40.. Kit de calibrare a gazului și TUS40
unitate terminală de service și întreținere care trebuie conectată la senzor prin interfața de comunicare (pe conectorul CN4) integrată în același cablu.
Pentru procedura de calibrare, consultați instrucțiunile date cu terminalul de service.

Dezasamblarea

Opriți detectorul, deconectați firul de la bornele și demontați carcasa de la orice sistem de blocare.

garanție

Garanția pentru produsele EsiWelma este valabilă 12 luni de la data instalării și nu mai mult de 24 de luni de la data de fabricație plasată pe produs.
Datele de instalare, ștampila și semnarea pe cuponul completat de instalator vor fi considerate drept dovadă pentru garanție. În cazul reparației în garanție, copia cuponului trebuie returnată împreună cu produsul.

Accesorii

UZR20.4	Card cu 4 relee
TUL40..	Kit de calibrare a gazului
TUS40	Instrumente terminale de service și întreținere
CRG40	Con de colectare a gazelor
PAP40	Protecție puternică împotriva jeturilor

Dimensiuni si greutate: Dimensiuni (HxLxD): 130x100x60mm.

Greutate: 0,5 kg

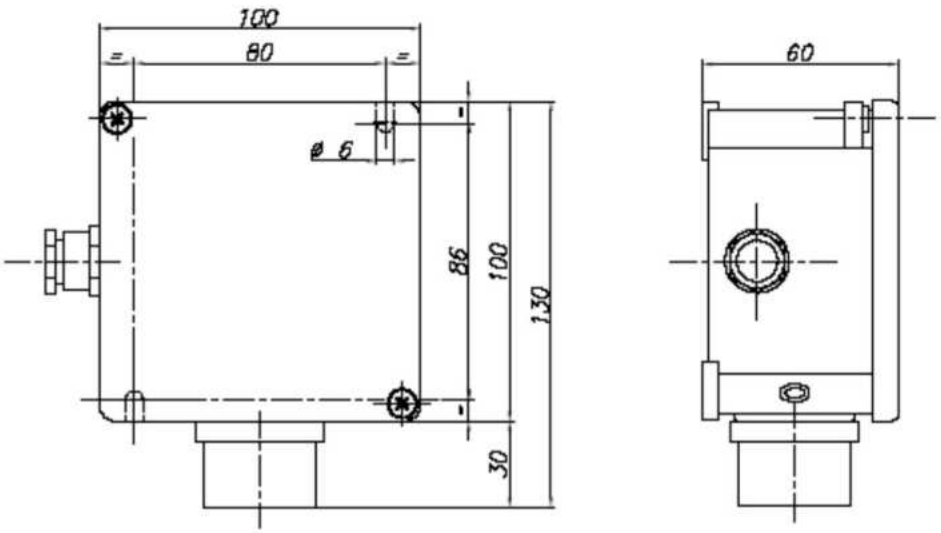

Date de instalare

A se completa de către instalator		Ștampila și semnătura instalatorului
Locul de instalare:		
Cod de comandă:		
Număr piesa:	Data fabricatiei:	
Data instalării:	Data de expirare:	

Verificări de rutină

A se completa de către instalator/personalul de service	Semnătură

Notă

.....

.....

.....

.....

.....

.....

.....

.....

.....

.....

Datorită politicii noastre de îmbunătățire continuă a produselor, specificațiile pot fi modificate fără notificare.

EsiWelma®
a Navim Group Company

Sensigas®

Gas detectors

IP55 Protection Degree

UR.20.L

11…28Vdc power supply. Pellistor (S (standard) or P (professional) version) or Semiconductor (T version) sensing element for flammable gases; Electrochemical Cell (S or P version) or Semiconductor (T version) for toxic gases. Up to three alarm thresholds. Led on the sensing element for operating status indication.
Automatic countdown of sensor lifetime.

Use

UR.20.L sensors are used to detect presence of methane, LPG, carbon monoxide (CO), gasoline vapours, acetylene, hydrogen, ammonia, propane, octane, ethanol (other gases on request) in heating rooms, parking and light industrial areas.
UR.20.L sensors can be used in stand-alone mode with 4…20mA output or with an optional voltage-free contact relay card having the following 4 digital outputs:
Pre-alarm, 1st alarm threshold, 2nd alarm threshold, Sensor Failure.

Operation

In case of gas leakage the sensor compares the measured concentration value with the pre-set alarm thresholds switching on the relevant relays.
Information of the measured concentration value is always on 4…20mA output.

Ordering

Simply indicate product code: please, refer to “available models”.

Available Models

Code: UR () yy z L

- L → L= IP55 protection degree
- z → Sensing element type: P= Professional Cat; S = Standard Cat.; T = Semiconductor with threshold operation
- yy → “40” or “52” Bus Based System like EW40 or EW52; “20” for Stand Alone detectors with 4…20 mA output & 4 optional VFC relays output
- () → G= Methane; P= LPG; O= Carbon monoxide; B= Gasoline vapours; L = Acetylene; I = Hydrogen; M = Ammonia; C= Propane; T = Octane; E = Ethyl Alcohol; S= Oxygen; D = Carbon dioxide; X= Xylene; A= Acetone; H= Hexane; Q= Ciclo-Hexane; T= Toluene; N= Pentane; U=Butane; F= Heptane; K=Ethane; J= Ethanol; V= Methanol; Z= Benzene; Y= Ethyl Acetate; W= Hydrogen cyanide; HS= Sulphuric acid; HC= Hydrogen chloride; CL= Chlorine; N1= Nitrogen monoxide; N2= Nitrogen Dioxide; N3= Nitrous Oxide; HY=Hydrocarbons.

Models on request

For other gases, please contact Customer Service.

Technical characteristics

Sensing Element	Pellistor or Semiconductor	Electrochemical Cell or Semiconductor
Detectable Gas (see available models)	Explosive Gas	Toxic Gas
Power supply	11÷28Vdc	11÷28Vdc
Max power consumption	3.2W	1.5W
Measurement range	0…100% LEL	0…500 ppm
Precision (Pellistor or Electrochemical Cell)	± 5% full scale, ± 10% readout	
Precision (Semiconductor)	± 10% full scale (on calibration point)	
Repeatability	± 5% del full scale, ± 10% readout	
Measurement resolution	1% LIE	5 ppm
Microprocessor resolution	1024 points (10 bit)	1024 points (10 bit)
Digital filtering technique	Kalman Filter	Kalman Filter
Watch dog	Internal	Internal
Warm-up time	< 2m	< 2m
Stabilization time	< 2m	< 2m
Response time	< 20s (T50), < 60s (T90)	
Average Sensor life (in air)	255 weeks	255 weeks
Output signal type:		
Proportional output (default)	- 4mA = 0% LEL; 0 ppm - 20mA = 100% LEL; 500 ppm	
Step output (thresholds applications)	- 0mA = no alarm - 10mA = 1st threshold alarm - 20mA = 2nd thresholds alarm	
Output reference selection	By jumpers to power supply negative or positive reference	
4…20mA output load resistor	- Up to 200Ω @ 12Vdc power supply - 200Ω ÷ 700Ω @ 24Vdc power supply	
Operation Temperature	-20 ÷ 50 °C	
Storage Temperature	-20 ÷ 70 °C	
Relative Humidity (without condensing)		
- Operation	15 ÷ 90 %RH	
- Storage	45 ÷ 75 %RH	
Operation pressure	80 ÷ 110 KPa	
Air speed	≤ 6 m/s	
Optical signal	Red LED visible on the sensor body	
Weight & dimension	See dedicated paragraph	
Options & Accessories		
4 relay SPDT card **UZR20.4** NO or NC available contact, jumpers selectable. The card is also equipped with 4 led and 4 detachable terminal boards (one for each relay).		(Default values:) Relay A: Pre-alarm 10% LEL, 50 ppm Relay B: 1st threshold alarm 20% LEL, 100 ppm Relay C: 2nd threshold alarm 40% LEL, 200 ppm Relay D: Sensor Failure The alarm thresholds are also selectable by dipswitch or by service & maintenance terminal. See installation and start-up chapter.
Relay maximum load:	50mA @ 24Vac/dc, 100mA @ 12Vac/dc	
Relay operation mode:	- Direct: Relay ON by event - Reverse: Relay ON without event	
Gas calibration Kit **TUL40..**	See installation and start-up chapter	
Service & maintenance terminal + communication card **TUS40**	See installation and start-up chapter	
Gas collect cone **CRG40**	See dedicated data sheet	
Powerful jets protection **PAP40**	See dedicated data sheet	
CE Conformity		
Directive / Standards EMC	Electromagnetic Compatibility Directive 2014/30/EU / EN50270 / EN 61326-1	
Directive / Standards LVD	Not applicable	

Sensors lifetime

Sensor average lifetime (see technical characteristics) is referred to a typical usage in a pollution-free environment. Presence of a high concentration of pollutants can shorten the lifetime of the sensing element.

Once the detection system starts up, it has to be supplied with energy during all the lifetime of its sensors.

Seasonal use of the detection system is not recommended.

Installation

For Sensors installation, follow the rules as in the diagram:

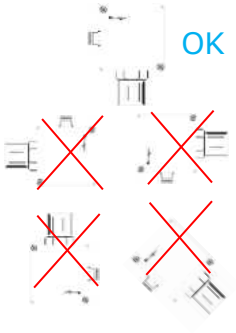

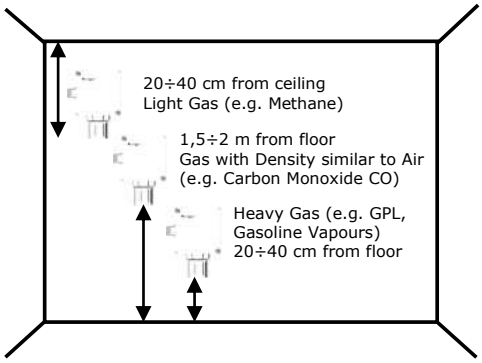

The following rules to install the detectors are strictly recommended:

1. where accidental gas leakages are possible
2. at least 1.5m far from any source of heat or point of heavy ventilation
3. not in spaces where ventilation is poor and gas-pocket can form
4. far from whatever can hinder the gas to flow naturally
5. far from appliances that throughout their normal working can have functional gas leakage
6. in spaces where temperature is between -20°C and 50°C and relative humidity lower than 90% (no dew)
7. assemble and dismantle detector only when there is no voltage.

The quantities of detectors to be installed in a room are proportional to the height and the surface of the room itself.

This parameter depends on a great range of variables, which is why **the following graph is not a rule, but a simple help for installation for light gas detectors**

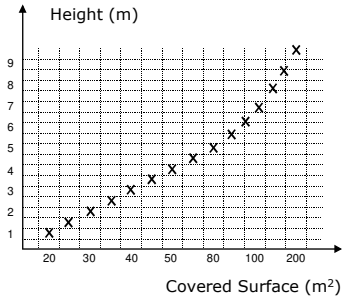

Media Coverage in m²	Areas with normal geometry		Areas with particular geometry (beams, ceilings, wells, barriers to gas diffusion)	
Sensor Type	Light Gas	Heavy Gas	Light Gas	Heavy Gas
Standard Pellistor	80…100	50…80	50…80	30…50
Electrochemical Cell	100…300		60…150	

Environmental compatibility and disposal

This product has been designed and constructed using materials and processes that take into account the environmental issue. Refer to the following notes for disposal of the product at the end of its working life, or when it is replaced:

- for disposal purposes, this product is classified as an electric and electronic device: do not dispose of it with normal household waste, in particular as regards the printed circuit
- comply with all local laws in force
- as far as possible reuse basic materials to keep environmental impact to a minimum
- use local depots and waste recycling companies, or contact the supplier or manufacturer to return used products or to ask for information on environmental compatibility and waste disposal
- the product packaging can be reused. Keep it for future use or to return the product to the supplier

Electrical Installation

WARNING: before handling the cables and configuring the system, be sure there is no voltage and the area is safe.

Install the sensor in compliance with local Standards.
To enter cables, uses the cable gland provided on the housing.
The cable sheath cannot be larger than 8mm.
Ground the sensor by the appropriate grounding system on the housing.

Terminal board and electrical connections

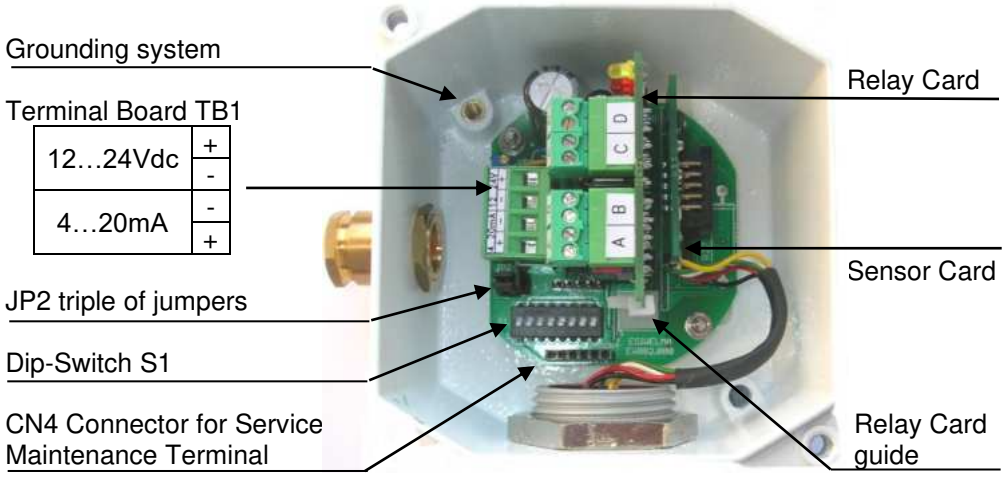

Cables:

Depending on the connecting distance, use at least a 3-conductor cable, min. cables section 0,75mm^2 up to 100m, 1mm^2 up to 200m, 1,5mm^2 up to 500m.
In case of electromagnetic noise, use a shielded cable.
If a relay card is used, a multiple cable suitable for the number of connections should be provided.

Configuration:

Default settings of the sensor are shown in “Technical Data” chapter.
In order to change default settings, switch off the power supply, input new settings by using JP2 triple of jumpers, or S1 dipswitch shown in the figure and switch on again the power supply; in particular:

4…20mA Output reference selection:

Output reference selection should be made by JP2 triple of jumpers; to change this setting, operator has to move **JP2** jumpers as shown in the figure:

Negative reference (default) — Positive reference

WARNING: if default setting change, the output signal polarity on **TB1** terminal board, will be inverted.

4…20mA Output signal type configuration:

To set the 4…20mA output signal type, operator has to use the 5th selector of the dip-switch in **S1** position, particularly:

Proportional Output (4…20mA)

Step Output (0-10-20mA)

Alarm Thresholds settings:

To set the alarm thresholds of the optional relay card, the operator has to use the first 4 selectors of **S1** dipswitch.
Particularly, the thresholds, shown in full scale range percentage, will be:

(*) When the first 4 selectors of the dip-switch are in OFF position, the alarm thresholds could be set by **TUS40** Service & Maintenance Terminal.
As soon this selection is set, the detector assumes the default settings as alarm thresholds.
In order to set the alarm thresholds by **TUS40** Service & Maintenance Terminal, see dedicated instruction booklet.

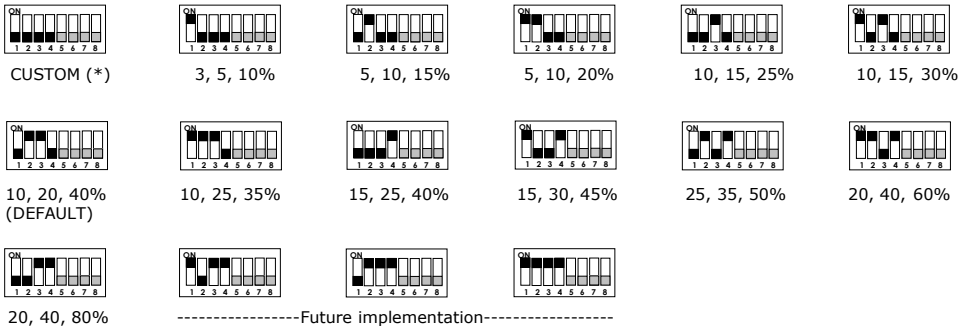

Relay Card Installation

By a connector called **CN3**, placed on the main card, it is possible to add a card with 4 SPDT relays and relatives led, associated to the following functional conditions: pre-alarm, 1st threshold alarm, 2nd threshold alarm and sensor failure.
How to install the card:

Phase 1:
Insert the Relay Card Guide on the main card.
Pay attention that the elastic flag faced the main terminal board TB1.

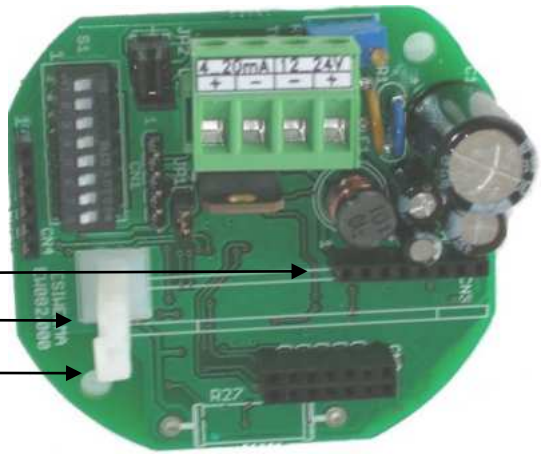

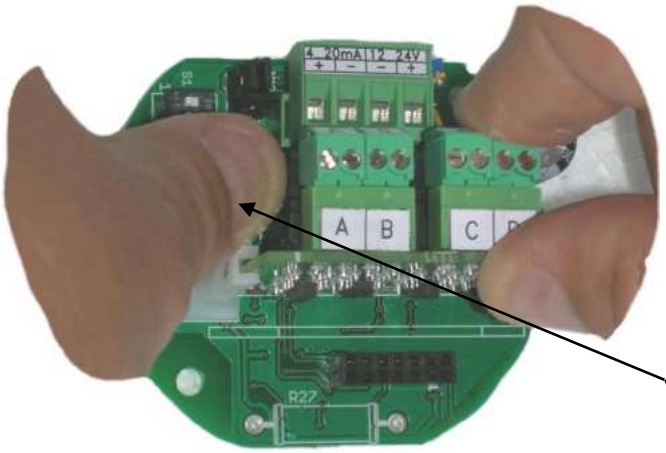

Phase 2:
Insert the Relay Card and pay attention to pull the elastic flag towards main terminal board TB1.

Elastic Flag

Phase 3:
Check the position of the Relay Card.
Pay attention that all pins are in CN3 connector and that card is placed and fastened properly by the elastic flag.

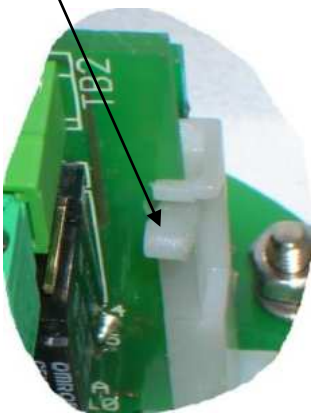

Phase 4:
Tick the appropriate check box using a permanent marker.

Relay Card Electrical Installation

After the mechanical installation of the Relay Card, the operator should provide to configure it selecting the type of contact (NO or NC) available on each terminal board, and direct or reverse operation mode of the relay.

Type of contact selection:

For each relay a couple of terminals are available.
Use jumper **JP1…JP4** in order to select type of contact.

NC or NO contact of Pre-alarm relay
NC or NO contact of 1st threshold relay
NC or NO contact of 2nd threshold relay
NC or NO contact of sensor failure relay

DL1 (Yellow), Sensor FAILURE

DL2 (Red), 2nd alarm threshold

DL3 (Red), 1st alarm threshold

DL4 (Red), Pre-alarm

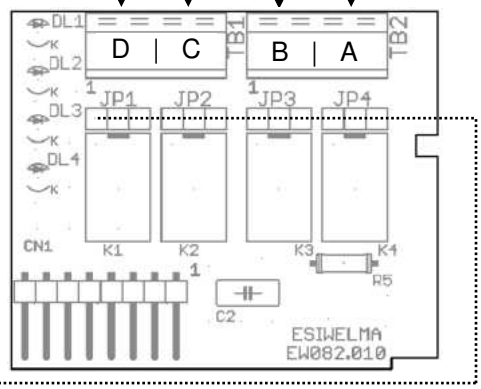

Type of contact selection (JP1÷JP4):

NC NO

Direct or reverse operation mode:

In order to select the operation mode of the relays, operator has to use the 6th selector of the dip-switch in **S1** position, particularly:

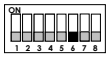

Direct operation mode:
(relay energized by event)

Reverse operation mode:
(relay energized without event)

Preliminary check after the mechanical and electrical installation

The sensors are factory calibrated then they normally don't need any other calibration once installed. In any case, after the installation a functional check of the sensors is recommended.
Turning On the detector a 2 minutes preheating phase will occur. After this time the sensor will switch in normal operation mode, but the best performances will be reach after at least 2 hours.
When detector is full working a gas response should be verified using the TUL40..
Gas calibration kit. This Kit contains:

- 1 bottle of calibrated gas: 50% of L.E.L. for explosive gas or at 500ppm of CO; (see ordering codes on the specific instruction booklet)
- pressure valve/adapter and flow gauge
- head sensor adapter
- about 2 metres of pipe.

During the test the operator has to check the 4…20mA output current value, the state of the led on the sensor body and, if installed, the state of the led on relay card (cover must be removed).

The status LED on the sensor body, and the 4...20mA output, have the following functional meaning:

Sensor Operating Mode	*4...20mA Output*	*Status led on sensor body*
PREHEATING	2mA	Blinks at 2 Hz
NORMAL OPERATION	4...20mA *0,10,20mA for threshold applications*	1 Blink every about 10 sec.
PREALARM		2 Blinks every about 5 sec.
1st ALARM THRESHOLD		3 Blinks every about 5 sec
2nd ALARM THRESHOLD		4 Blinks every about 5 sec
SENSOR FAILURE	22mA	Fixed light

Preliminary check after the mechanical and electrical installation *(continue)*

Applying the calibrated mixture of gas to 50% of the L.E.L. (or to 500ppm of CO) by the Gas calibration kit, check that the 4...20mA output signal is included from 10,5 to 13,5mA (from 18,5 to 21mA for CO).
In same way, the status led on the sensor body and the pre-alarm relay, 1st and 2nd alarm threshold, of the optional relay card, switch on as a result of the thresholds setting.

Maintenance

Every three/six months a sensor functional check should be provided.

Routine

Routine check provides the same test described in the chapter “preliminary check after mechanical and electrical installation”.

Corrective

For any anomaly found during recurrent maintenance of the sensors, operator has to send the sensor back to the supplier, who on his turn will return it to the manufacturer. To correct any calibration anomaly found during recurrent maintenance of sensors, operator can use **TUL40..** Gas calibration kit and **TUS40** service & maintenance terminal unit that has to be connected to the sensor by the communication interface (on the connector CN4) integrated in the same cable.
For the calibration procedure, see the instructions given with service terminal.

Disassembly

Power off the detector, disconnect the wire on the terminals and dismount the housing from any blocking system.

Warranty

Warranty on EsiWelma products is valid 12 months from installation date and no longer that 24 months from manufacturing date placed on the product.
Installation data, stamp and sign on the coupon filled in by the installer will be considered as a proof for warranty. In case of on warranty repairing, copy of the coupon has to be returned together with the product.

Accessories

UZR20.4	4 Relays Card
TUL40..	Gas calibration Kit
TUS40	Service & Maintenance Terminal Tools
CRG40	Gas collect cone
PAP40	Powerful jets protection

Dimensions and weight:

Dimension (HxWxD): 130x100x60mm. Weight: 0,5Kg

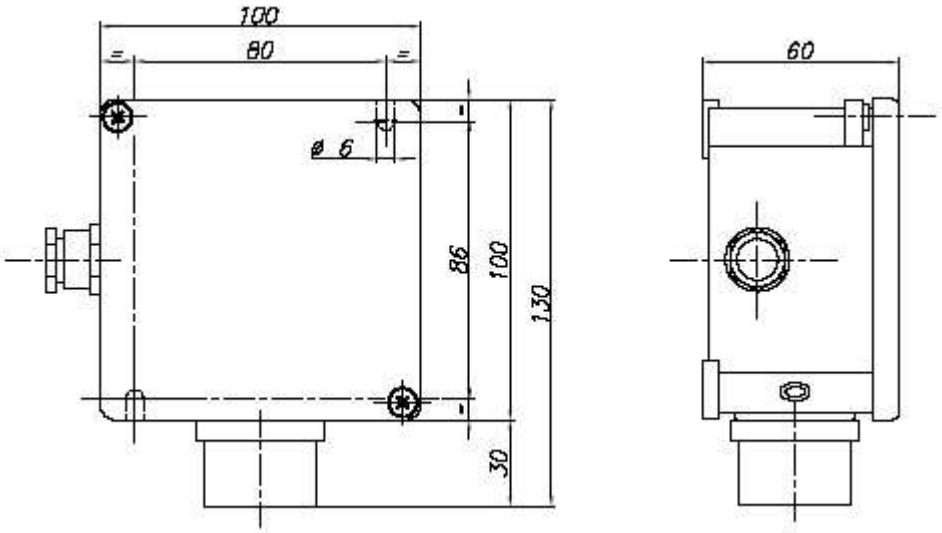

Installation data

To be filled by Installer		*Installer stamp and signature*
Installation site:		
Ordering code:		
Part Number:	Manufacturing date:	
Installation date:	Expiring date:	

Routine checks

To be filled by Installer / Service Personnel	*Signature*

Note

……

……

……

……

……

……

……

……

……

……

Due to our policy of continuous product improvement, specifications are subject to change without notice.

FIȘĂ TEHNICĂ E-DG-Ex - Detector de gaze pentru medii cu pericol de explozie

Nr Crt.	Specificațiile tehnice impuse prin Caietul de sarcini	Corespondența propunerii tehnice cu specificațiile tehnice impuse prin Caietul de sarcini	Producător
0	1	2	3
1.	**Parametrii tehnici si funcționali:** - Tensiunea de alimentare:11-28 V c.c. - Tipul de senzor: pelistor sau semiconductor pentru gaz explosiv - Detectorul va avea praguri de semnalizare la 25% și respectiv 50 % din LEL; - Detectorul va semnaliza prezența gazelor: - Funcție de monitorizare internă (watch dog) - Timp de auto-testare și stabilizare < 2min - Timp de raspuns <60s la T90 - Material carcasa: aluminiu; - Material protecție: Inox, aluminiu - Grad de protecție IP 65 - Temperatura de lucru: -25 .. +50 grade Celsius - Umiditate relativa: 0-95% (fara condens); - Curent absorbit stand-by: maxim 10 mA; - Curent absorbit alarma: maxim 100 mA - Conexiune electrică: terminale cu șurub; - Compatibil cu centrala de incendiu prin transponder;	**Parametrii tehnici si funcționali:** - Tensiunea de alimentare:11-28 V c.c. - Tipul de senzor: pelistor sau semiconductor pentru gaz explosiv - Detectorul va avea praguri de semnalizare la 25% și respectiv 50 % din LEL; - Detectorul va semnaliza prezența gazelor: - Funcție de monitorizare internă (watch dog) - Timp de auto-testare și stabilizare < 2min - Timp de raspuns <60s la T90 - Material carcasa: aluminiu; - Material protecție: Inox, aluminiu - Grad de protecție IP 65 - Temperatura de lucru: -40 .. +70 grade Celsius - Umiditate relativa: 0-95% (fara condens); - Curent absorbit stand-by: maxim 10 mA; - Curent absorbit alarma: maxim 100 mA - Conexiune electrică: terminale cu șurub; - Compatibil cu centrala de incendiu prin transponder;	**ESIWELMA** **Cod: URG21PE-EXR**
2.	**Specificaţii de performanţă şi condiţii privind siguranta în exploatare:** - Detecteaza gazele pe principiul analizei aerului; - Indicare locala și la distanță functionare, defect, alarma; - E-DF-Ex Marcaj Ex pentru grupa II zona 2 Temperatura maximă de suprafață T4	**Specificaţii de performanţă şi condiţii privind siguranta în exploatare:** - Detecteaza gazele pe principiul analizei aerului; - Indicare locala și la distanță functionare, defect, alarma; - E-DF-Ex Marcaj Ex pentru grupa II zona 2 Temperatura maximă de suprafață T4	
3.	**Condiţii privind conformitatea cu standarde relevante:** - SR EN 60079-0; SR. EN 60529; SR EN 60079	**Condiţii privind conformitatea cu standarde relevante:** - SR EN 60079-0; SR. EN 60529; SR EN 60079	
4.	**Condiţii de garanţie şi postgaranţie:** - Producătorul va garanta calitatea şi buna funcţionare a produsului timp de 24 luni de la punerea în funcţiune sau de 36 luni de la data livrarii. - Produsul va corespunde normelor tehnice şi standardelor europene.	**Condiţii de garanţie şi postgaranţie:** - Producătorul garantează calitatea şi buna funcţionare a produsului timp de 24 luni de la punerea în funcţiune sau de 36 luni de la data livrarii. - Produsul va corespunde normelor tehnice şi standardelor europene.	
5.	**Condiţii cu caracter tehnic:** - Nu vor fi luate în consideraţie decât ofertele	**Condiţii cu caracter tehnic:** - Nu vor fi luate în consideraţie decât ofertele	

	însoţite de documentaţie completă pentru selecţie şi montaj în limba română. - Vor fi anexate: ▪ instrucţiuni de montaj (scheme de conectare, broşuri, cataloage); ▪ instrucţiuni de exploatare; ▪ buletine de încercări, verificări, probe; ▪ declaratie de conformitate.	însoţite de documentaţie completă pentru selecţie şi montaj în limba română. - Vor fi anexate: ▪ instrucţiuni de montaj (scheme de conectare, broşuri, cataloage); ▪ instrucţiuni de exploatare; ▪ buletine de încercări, verificări, probe; ▪ declaratie de conformitate.	

EsiWelma®
a Navim Group Company

Sensigas®

Gas Detectors

ATEX II 2G Ex d IIC T6[1] Gb certified
MED/3.54 (IEC 60092-504) certified

UR.21.E

Power supply 10÷28Vdc. Sensitive elements:
- Catalytic (S and P), Infrared (I) or Semiconductor (T) for flammable gases,
- Electrochemical cell (S or P), Infrared (I) or Semiconductor (T) for toxic and refrigerant gases.

Up to three intervention thresholds. Automatic counting of the lifetime of the sensors.
LED on the sensor body to indicate the operating status and display option.

Use

UR.21.E detectors are used to detect, by diffusion, the presence of:
Methane Gas, LPG, Carbon Monoxide (CO), Petrol Vapours, Acetylene, Hydrogen, Ammonia (LIE and Toxicity), Propane, Octane, Ethyl Alcohol (Ethanol), Oxygen, Carbon Dioxide, Xylene, Acetone, Hexane, Cycle- Hexane, Toluene, Pentane, Butane, Heptane, Ethane, Methanol, Benzene, Ethyl Acetate, Cyanuric Acid, Sulphuric Acid (Hydrogen Sulphate), Hydrochloric Acid, Chlorine, Nitrogen Monoxide, Nitrogen Dioxide, Nitrous Oxide, Ethylene Oxide , Biogas and, more generally, Hydrocarbons, as well as flammable and non-flammable Refrigerants, in areas classified as Zone 1 in industrial environments, thermal power stations or similar places.

The UR.21.E detectors are designed for Stand-Alone operation with a 4÷20mA output and for interfacing with the Sensigas® UCE1 and UCE4 Central Units and, more in general, with any Central Unit, PLC, Module of I / O that has 4÷20mA inputs.

Operation

In case of a gas leak the sensor compares the measured concentration value with the intervention thresholds set by activating the relays or the resistive outputs (if provided) associated with them. The information of the measured concentration value is always present on the 4 ÷ 20mA output.

Ordering

Simply indicate product code: please, refer to “available models”.

Available models:

Code: *** UR xx yy z E **** → E= Explosion Proof Execution

→ Sensing Element type:
S = Standard; P= Professional; I = Infrared; T = Standard with Threshold operation.

→ “21” for Stand Alone detectors with 4…20 mA output
“41” for Bus Based System EW40

→ G = Methane; P = LPG; O = Carbon Monoxide; B = Gasoline Vapours; L = Acetylene;
I = Hydrogen; M = Ammonia (LIE); C = Propane; T = Octane; E = Ethyl Alcohol;
S = Oxygen; D = Carbon Dioxide; X = Xylene; A = Acetone; H = Hexane;
Q = Cycle-Hexane; T = Toluene; N = Pentane; U = Butane; F = Heptane; K = Ethane;
J = Ammonia (Toxicity); V = Methanol; Z = Benzene; Y = Ethyl Acetate;
W = Hydrocyanic Acid; HS = Sulphuric Acid; HC = Hydrochloric Acid; CL = Chlorine;
N1 = Nitrogen Monoxide; N2 = Nitrogen Dioxide; N3 = Nitrous Oxide,
EO = Ethylene Oxide; GD = Biogas; HY = Hydrocarbons; R = Refrigerants.

* Prefix to the name of the Detector: DR = Display with Relays; DN = Display without Relays;
** Suffix to the name of the Detector: EXR = Extended temperature range -40… + 70°C.

Technical Characteristics

Sensor type	Catalytic, Infrared, or Semiconductor	Electrochemical Cell or Semiconductor
Detectable Gas (see available models)	Explosive Gases (2)	Toxic Gases (e.g.: CO)
Power Supply	10÷28Vdc	10÷28Vdc
Maximum Power Consumption (@ 28Vdc with 4÷20mA with s.c. output)	2,4W (4W with UZR20.4)	1.2W (2,8W with UZR20.4)
Measuring range	0÷100% LEL(3)	0÷500 ppm
Precision (Catalytic, E.C., NDIR)	± 5% of Full Scale,	± 10% readout
Precision (Semiconductor)	± 10% of Full Scale	(on calibration point)
Repeatability	± 5% of Full Scale,	± 10% readout
Measurement Resolution (Sensivity)	1% LEL	5 ppm
Microprocessor Resolution	4096 points (12 bit A/D Converter)	
Digital Filter system	Kalman Filter and zero drift compensation	
Watch dog	External, acting on the whole Safety Chain	
Warm-up Time	< 2 minutes after every power on	
Stabilization Time	2 hours from first power on	
Response Time (Max)	< 20s (T50), < 60s (T90)	
Average Sensor Life (in Air)	255 weeks	255 weeks
Output 4÷20mA signal type:		
Proportional Output (default)	- 4mA = 0% LEL; 0 ppm - 20mA = 100% LEL; 500 ppm	
Step Output (1 o 2 thresholds application)	- 0mA = no Alarm - 10mA = 1st Threshold Alarm - 20mA = 2nd Threshold Alarm	
Settable reference of 4÷20mA signal	With jumpers (reference to negative or positive of power supply)	
Load Resistance of 4…20mA output (with generator limited to 24mA)	Minimum 0Ω @ 28Vdc Maximum 300Ω @ 10Vdc	
Operation and storage conditions:		
Environment Temperature (°C)		
- Operating	-20 ÷ 50 or -40 ÷ 70 (Extended Range)	
- Storage	-20 ÷ 70	
Relative Umidity (%UR) without condens.		
- Operating	15 ÷ 90	
- Storage	45 ÷ 75	
Operating Pressure (KPa)	80 ÷ 120	
Air Speed (m/s)	≤ 6	
Optical Signalling	Red LED visible on the sensor body	
Dimensions and Weight	See dedicated paragraph	
MED Marking	0474 / xxxx (manufacturing year) CERTIFICATE n. MED327120CS	
ATEX Marking	CE 1370 Ex II 2G Ex d IIC T6(1) Gb BVI 07 ATEX 0032 + EXT 03/19 -20°C ≤ T_A ≤ +50°C -40°C ≤ T_A ≤ +70°C (Extended Range)	

Note (1): Some Detectors of the DR-UR.21.E-EXR type, ie equipped with Display Board with Relay (prefix **DR-**), with extended temperature range (suffix **-EXR**) and which use Catalytic or Infrared sensitive elements, ie with particular absorption characteristics, have temperature class T5 instead of T6.

Note (2): Detectors using Catalytic Sensing Elements are sensitive to all Flammable Gases, with different sensitivities and responses related to Methane Gas (see Tables contained in the Display Board and Service Terminal Manuals), through which these relative responses can be inserted in the Detector.

Note (3): When Detector detects a very high gradient of increasing concentration, and the full-scale value of 20% is exceeded, power is removed from the sensing element and the out-of-range (fault condition for overrange) is declared respectively with:
– the 4÷20mA output which is set at 22mA;
– fault relay output activated (relay energized or not depending on the selection made);
– the status LED visible from outside fixed on with an OFF flash of 0.5s every 5s
– display (if present), explicitly declares the need for a recalibration.
After such a condition occurs:
– make sure the area is free of explosive mixtures;
– turn off and turn on the detector to allow the sensing element to be powered and wait at least an hour to allow thermal stabilization.
Only entering the calibration procedure can bring the detector to exit the overrange fault state.
As with all other operational contexts:
– if the recalibration procedure is successful, it can bring the detector into normal operating status;
– if the recalibration procedure is not successful, the detector is simply declared faulty.

Technical characteristics (continued)

4 Relay SPDT Card **UZR20.4**[(4)]

It is used to activate signals and/or external systems (light signals, sirens, ventilation systems, etc.).

Note [(4)]: not insertable if the Display Board **DR**.. or **DN**… is present

NO or NC contacts available, selectable by jumpers.
N. 4 LEDs are presente and associated with the status of each Relay and separate quick-connecting term. blocks
The state of the LEDs is directly associated with the status of the relative Relay: Relay X "On" => Led X "On".

(default values for explosion gas and CO)
Relay A: Pre-alarm (10% LEL, 50 ppm)
Relay B: 1st Thresh. Alarm (20% LEL, 100 ppm)
Relay C: 2nd Thresh. Alarm (40% LEL, 200 ppm)
Relay D: Detector Fail

Alarm intervention thresholds can be reset by dip-switch (15 combinations) or by service and maintenance terminal or display.

Relay contact range: 50mA @ 24Vac/dc, 100mA @ 12Vac/dc

Relay control logic:
- Direct: Relay ON in the presence of an event;
- Inverse: Relay ON in the absence of an event.

Display Board without Relay **DN**-*DetName.*

Display Board with Relay **DR-***DetName.*

Display Boards are in fact the Operator Interface on board the Detector for control, monitoring, calibration and calibration operations. They manage:
N. 4 Sensors for Magnetic Actuator used to give the operator commands;
N. 4 SPDT Relay (only for DR .. Board)

Each Relay is associated with a Led for the local Alarm or Sensor Fault signaling The state of the Leds is associated directly to the status of the relative Relay: Relay X "On" = > Led X "On"
N. 6 heating resistors for Extended Range Detectors
(suffix **-EXR** to the name of the detector)

PhotoMOS Card **UZS20..**

It is used to indicate the status of the detector through a resistive value presented at the terminals.

It is typically used in conjunction with modules that put on the LOOP peripheral fire alarms that have a behavior similar to that of smoke detectors.

	Normal	Pre-Al	1st Th	2nd Th	Fail
UZS20.E	*22kΩ*	*10kΩ*	*2,2 kΩ*	*n.p.*	*Open*
UZS20.A	*27kΩ*	*n.p.*	*10kΩ*	*n.p.*	*Open*
UZS20.S	*2,2kΩ*	*n.p.*	*Close*	*n.p.*	*Open*

Magnetic Actuator Card **UZMAG**

The card for the UCM magnetic actuator, allows the calibration of the detector without the opening of the housing which would require the declassification of the area at risk of explosion in which the detector finds use.

It connects to the detector through the same connector as the display board and is therefore an alternative to it.

Verification and Calibration Kit **TUS40..**

Service and Maintenance Terminal with Interface Board **UIC20**.

See Chapter for Commissioning and Start-up.

Replacement Sensor Body **NRXX-Y-ZZZ**

Sensor body complete with relevant signal conditioning card.

See dedicate price list.

Sensor Lifetime

Sensor average lifetime (see technical characteristics) is referred to a typical usage in a pollution-free environment. Presence of a high concentration of pollutants can shorten the lifetime of the sensing element.

The Catalytic Sensor only works in the presence of Oxygen. Do not use pure gas or the lighter directly on the Sensor which could be irreparably damaged.

CAUTION: consider that in particularly polluted environments or with vapors of flammable substances (in particular solvents), the useful life of the sensor can be considerably reduced. Some Substances cause a permanent reduction in sensitivity, preventing the Sensor from coming into contact with Silicone Vapours (present in Paints and Sealants), Lead Tetraethyl or Esters Phosphates. Other substances cause a temporary loss of Sensitivity, these "Inhibitors" are Halogens, Hydrogen Sulfate, Chlorine, Chlorinated Hydrocarbons. In the latter case, after a short time in Clean Air, the Sensor resumes its normal operation.

Once the detection system starts up, it has to be supplied with energy during all the lifetime of its sensors.
Seasonal use is not recommended.

Mechanical Installation

For Sensors installation, follow the rules as in the diagram:

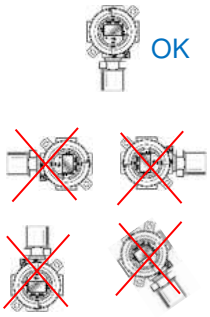

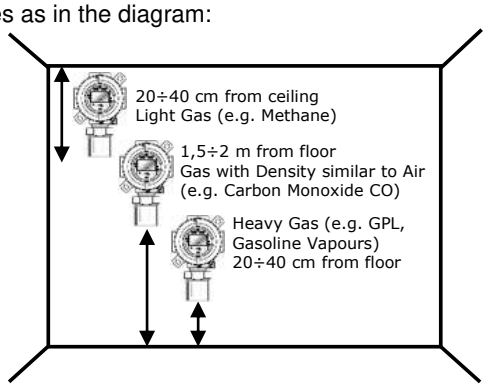

The positioning of the sensors must take into account not only the aforementioned general rules, but also the following installation rules; in particular the sensors must be installed:

- Near possible gas leak points;
- At least 1.5m from heat sources and ventilation openings;
- Never in poorly ventilated areas where gas pockets may occur and, more generally, away from obstacles to the natural movement of the gas;
- Far from appliances that throughout their normal working can have functional gas leakage (unless this is the purpose of the detection);
- In environments where atmospheric conditions are not included in the technical characteristics.
- The assembly and disassembly of the sensors must be carried out when the appliance is not live.

The number of sensors to be installed in an environment is proportional to its surface, its height and conformation, as well as the relative density of the gas.

The installation must also take into account:
- The geometry of the structures (beams, false ceilings, wells, etc.)
- Mechanical and liquid protection
- Poisoning protection
- Accessibility for appliance maintenance.

The installation of the detectors must take place as late as possible to avoid damage, but in time to adequately protect the environment for which they are intended.

Special Advise

CAUTION: Safety is guaranteed only if cover is properly tightened and locked.

- Tighten the cover in a clockwise direction, then verify that between case and cover there are no more than 0,5mm: it assures a perfect closing. Remember to tighten the grain placed on the cover.
- Respect the warning “DO NOT OPEN WHEN ENERGIZED” written on the cover, or declass the area before opening the cover.

Electrical Installation

CAUTION: Make sure that the area is safe and that the device has been disconnected from the power supply before starting any wiring and configuration operation.

Sensor installation must be carried out in accordance with EN60079-14.
For cable entry, use 1 "NPT cable gland union ATEX Certificate and compliant with EN60079-0 and EN60079-1 (Ex d protection mode).
The sensor must be earthed using the appropriate system provided.

Terminal Block and electric connections

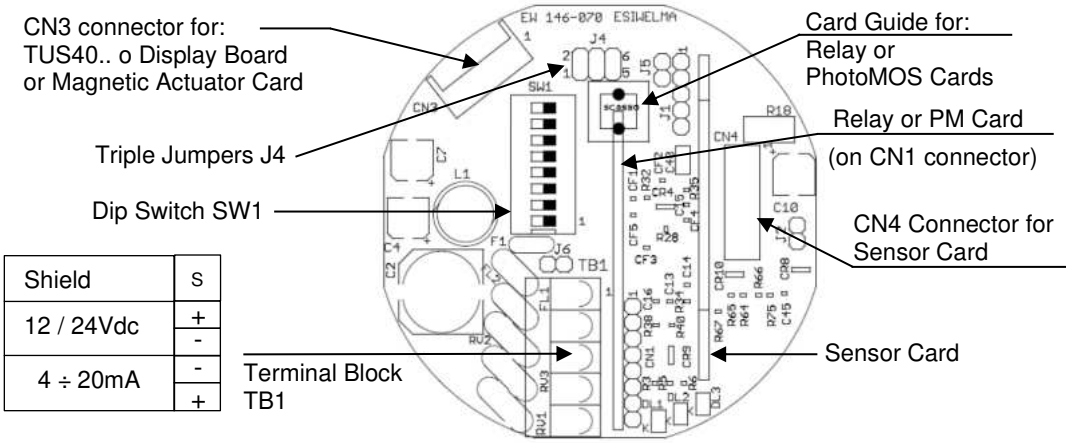

Shield	S
12 / 24Vdc	+
	-
4 ÷ 20mA	-
	+

Cabling:

Depending on the connection distance, use a cable with at least 3 conductors with a minimum section of 0.75mm^2 up to 100m, 1mm^2 up to 200m, 1.5mm^2 up to 500m.
In the presence of electromagnetic disturbances use shielded cable.
If the relay board is present, use a multipolar cable suitable for the number of connections.
The cable sheath must not exceed the diameter required by the cable gland.

Configuration:

Sensor is supplied with a basic programming which is the one indicated as default in the chapter of the technical features.
To change these settings, disconnect the device, make all the necessary settings using the triple jumpers **J4** or the Dip Switch SW1 shown in the figure and supply the device again; in particular:

4…20mA Output Reference Selection:

Sensor is basic set to have the negative of the supply signal as the 4÷20mA signal reference; to change this setting it is necessary to move the triple jumpers **J4** as shown in the figure:

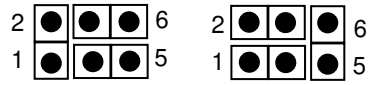

Ref. to **-** (default) Ref. to **+**

4…20mA Output Signal Type Configuration:

To set the 4…20mA output signal type, operator has to use the 5th selector of the dip-switch in **SW1** position, particularly:

Proportional Output (4÷20mA)

Step Output (0-10-20mA)

Alarm Thresholds Settings:

To set the intervention thresholds of the optional relay board or of the 4÷20mA output threshold operation, it is necessary to act on the first four dip-switch selectors of the **SW1** position; in particular thresholds expressed as a percentage of the Full Scale are the followig:

CUSTOM (*)

3, 5, 10%

5, 10, 15%

5, 10, 20%

10, 15, 25%

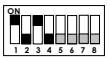

10, 15, 30%

10, 20, 40% (DEFAULT)

10, 25, 35%

15, 25, 40%

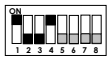

15, 30, 45%

25, 35, 50%

20, 40, 60%

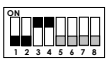

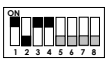

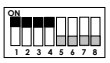

----------Future Implementation----------

(*) When the first four dip-switch selectors are in the OFF position, the trip thresholds can be only set by TUS40.. service and maintenance terminal or via Display (DR ... or DN Board ...).

In the event that this selection is made without the presence of the service terminal, the device will take the default thresholds as intervention thresholds. For the use of the terminal see the relative operating manual.

If the Display Board DR- or DN- is present, TUS40.. terminal is not usable.

Mechanical installation of the optional Relay Card or optional PhotoMos Cards with resistive output variation

On the main electronic card it is possible to insert, in a special connector named **CN1**, a module having on board N. 4 relays with changeover contact that will be activated in correspondence of the pre-alarm events, 1st alarm threshold, 2nd alarm threshold and faulty sensor, and the relative LEDs signaling.
Follow the steps below to insert the card:

CN1 Connector

Phase 1:
Insert on the main electronic card the card guide supplied with the card, taking care to turn the elastic flag towards the main terminal board.
Locate the connector CN1.

Card Guide
(with Elastic Flag)

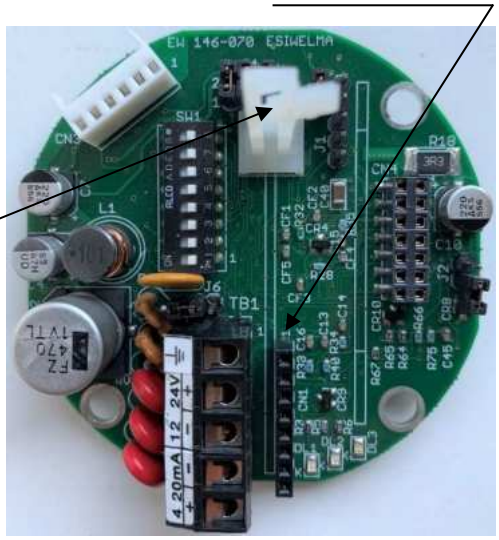

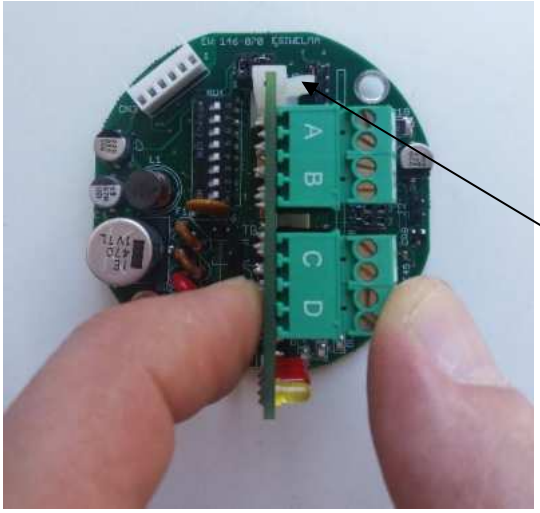

Phase 2:
Fully insert the card, taking care to pull the elastic flag of card guide towards the terminal board of the optional card.

Elastic Flag

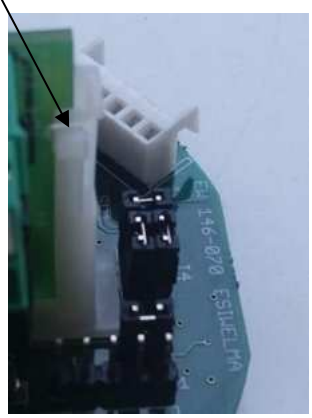

Phese 3:
Check the positioning of the card checking that all pins are internal to the CN1 connector and that, by practing a slight pull upwards, the card remains in position due to correctly hooked and held by the elastic flag of the card guide.

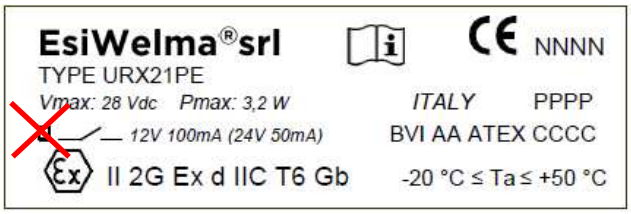

Phase 4:
Mark the box showing the presence of the relay card inside the device with a permanent marker (example).

Electrical installation of the optional relay card

After the relay card is mechanically installed it is necessary to provide for its electrical configuration by selecting the relay control logic and the type of contact that is required on the terminal board (NC or NO).

Type of contact selection:

For each relay there is a pair of removable terminals to which the type of contact (NC or NO) can be associated, selectable by jumpers **JP1**…**JP4** of the relay card.

Contact NC or NO of pre-alarm relay
Contact NC or NO of 1st Threshold relay
Contact NC or NO of 2nd Threshold relay
Contact NC or NO of Fail realy

DL1 (yellow), Sensor FAULT

DL2 (red), 1st Alarm Threshold

DL3 (red), 2nd Alarm Threshold

DL4 (red), Pre-alarm

Type of contact selection:

NC NO

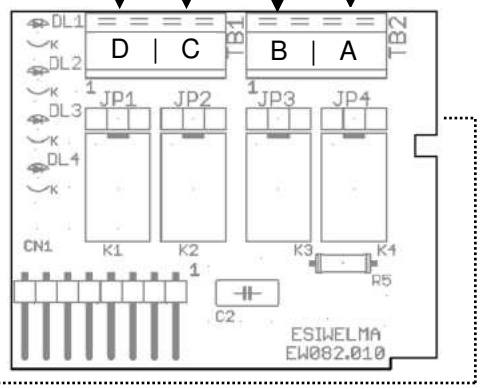

Setting of relay control logic:

To perform the setting of the control logic of the direct relays (relay energized in the presence of an event) or reverse (relay energized in the absence of an event), it is necessary to act on the 6th dip-switch of the **SW1** selector; in particular:

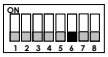

direct logic

reverse logic

Preliminary checks after mechanical and electrical installation

Sensor is calibrated at the factory and therefore no calibration operations are planned once installed; however, after installation it is necessary to perform a functional check of the sensors. When the device is powered, it will set itself in the sensor preheating phase, which lasts about 2 minutes.

After this time the sensor will go into the normal operating state, however the best performance will be obtained after about 2 hours.
With the operating sensor it is necessary to verify its response using the specific TUL40 test kit consisting of:

- 1 calibrated gas bottle to 50% of the LEL of the Methane or to 500ppm of CO (see ordering codes of the test kit on the specific technical sheet);
- special pressure reducer and flow regulator TUL40.FLUX or equivalent, so as to guarantee a flow of about 0,5 liters / minute;
- universal adapter to adapt to the sensor body (URCAP.ESI);
- connection pipe between the cylinder and adapter, approximately 2m long.

During the test it is necessary to observe the value of the output current, the status of the LED visible outside the sensor body and, if present, the status of the LEDs on the relay board, before closing the case.

The LED on the sensor body and the 4÷20mA output have the following functional meaning:

Sensor State	***4÷20mA Output***	***State Led on Sensor Body***
PREHEATING	2mA	Flashing with 2 Hz frequency
WORKING	4÷20mA *0,10,20mA for threshold applications*	1 pulse “ON” every about 10s
PRE-ALARM		2 pulses “ON” every about 5s
1st ALARM THRESHOLD		3 pulses “ON” every about 5s
2nd ALARM THRESHOLD		4 pulses “ON” every about 5s
FAILED SENSOR	22mA	ON steady
OVER-RANGE FAILURE	22mA	1 pulse “OFF” every about 5s

After applying the gas mixture at 50% of the LEL of the Methane gas (or at 500ppm for the CO) using the test kit (test gas application time > 2 minutes), make sure that the 4÷20mA output is between the 11 and 13 mA for Methane (or between 19 and 21mA for CO), the status LED flashes with 4 pulses every 5 seconds and the prealarm, 1st and 2nd alarm thresholds relays of the relay board are energized (or de-energized if SW1.6 is set to ON).

Troubleshooting

For troubleshooting, having only one LED that identifies the functional states described in the table above, when operating anomalies occur, in addition to the usual power and wiring checks, it is necessary to use the TUS40 terminal or use the Display Board (if present) and refer to the relevant product documentation (see also Notes 2 and 3 in technical features for Over-Range Failure).

Maintenance

Every three to six months a functional check of the sensors must be carried out, in accordance with the instructions contained in Standard EN60079-29-2.

Routine

The routine check involves the performance of the same tests as described in the chapter concerning preliminary checks after mechanical and electrical installation.

Corrective

Any failure found during the periodic checks of the sensors must be followed by sending the sensor to your Supplier / Installer, who will send it to EsiWelma.

Possible sensors non-calibration found during the periodic checks can be identified and corrected with the help of the **TUL40..** test kit .. and the **TUS40..** service terminal, (or of the display board) which must be connected to the sensor (on the **CN3** connector) through the appropriate communication interface integrated in the cable.

For the sensor recalibration procedure, refer to the documentation supplied with the service terminal, the display board or the card for the magnetic actuator.

Disassembly

Power off the detector, disconnect the wire on the terminals and dismount the housing from any blocking system.

Warranty

Warranty of the products is indicated in the General Sale Conditions to which reference is made.

Accessories and Spare Parts

- Relay Card with n. 4 SPDT relay **UZR20.4**
- Display Board with Relay **DR** (Det.Name)
- Display Board without Relay **DN** (Det.Name)
- PhotoMOS Card **UZS20..**
- Magnetic Actuator Card **UZMAG**
- Magnetic Actuator **UCM**
- Test Kit **TUL40..**
- Service Terminal Kit **TUS40..**
- Sensor Body **NRXX-Y-ZZZ**

Dimensions and Weight

Dimensions (HxWxD): 164x100x82mm. Weight: 0,8Kg

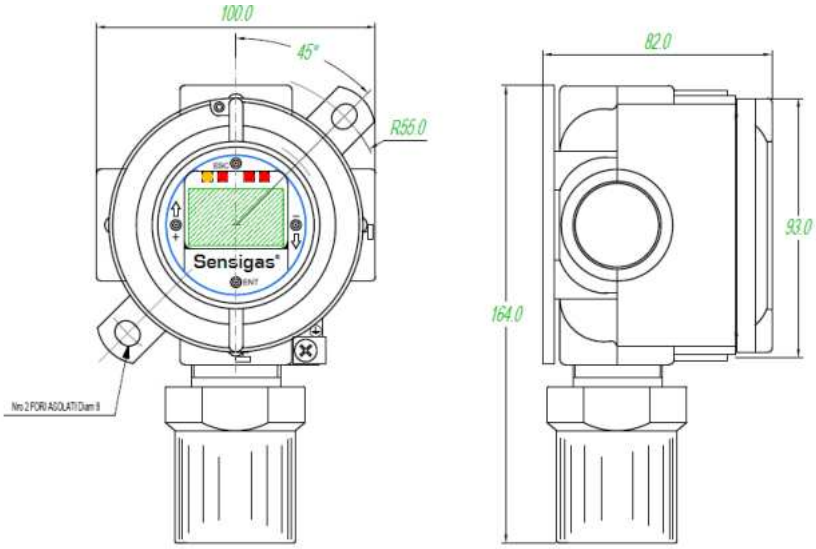

Legend of ATEX Marking

CE	Marking in compliance with all applicable Directives
1370	Identification number of the Notified Body for manufacturing survey
Ex	Marking for all equipment in conformity to ATEX 2014/34/EU Directive
II	Equipment Group for surface industry
2	Equipment Category 2 for use in Zone 1
G	Equipment intended for use in explosive gas atmosphere, caused by mixture of air and gas, vapours, flammable mists.
Ex d IIC T6[(1)] Gb	Type of protection according to EN60079-0, EN60079-1 and EN60079-29-1
BVI 07 ATEX 0032	EC Type Examination Certificate and possible extensions
-20°C ≤ TA ≤ +50°C	Environmental temperature range of the appliance (Standard)
-40°C ≤ TA ≤ +70°C	Environmental temperature range of the appliance (Extended Range)

Note [(1)]: Some Detectors of the DR-UR.21.E-EXR type, i.e. equipped with Display Board with Relay (prefix **DR-**), with extended temperature range (suffix **-EXR**) and which use Catalytic or Infrared sensing elements, i.e. with particular absorption characteristics, have temperature class T5 instead of T6.

Due to our policy of continuous product improvement, specifications are subject to change without notice.

FIȘĂ TEHNICĂ E-DFT - Detector multicriterial de fum şi temperatură

Nr Crt.	Specificațiile tehnice impuse prin Caietul de sarcini	Corespondența propunerii tehnice cu specificațiile tehnice impuse prin Caietul de sarcini	Producător
0	1	2	3
1.	**Parametrii tehnici şi funcţionali:** - Material carcasa ABS plastic UV stabilizat - Grad de protecție minim IP 21; - Temperatura de lucru: 0 °C ... +40 °C; - Umiditate relativa: 20-90% (fără condens); - Curent absorbit stand-by: maxim 5mA; - Curent absorbit alarma: maxim 100 mA; - Conexiune electrica: terminale cu șurub; - Sistem adresabil; - Compatibil cu centrala de incendiu;	**Parametrii tehnici şi funcţionali:** - Material carcasa ABS plastic UV stabilizat - Grad de protecție minim IP 21; - Temperatura de lucru: 0 °C ... +40 °C; - Umiditate relativa: 20-90% (fără condens); - Curent absorbit stand-by: maxim 5mA; - Curent absorbit alarma: maxim 100 mA; - Conexiune electrica: terminale cu șurub; - Sistem adresabil; - Compatibil cu centrala de incendiu;	**BENTEL SECURITY** **Cod: FC460PH**
2.	**Specificaţii de performanţă şi condiţii privind siguranta în exploatare:** - Detectează fumul vizibil produs de materiale care ard încet sau mocnit (exemplu mobilier, plastic, fum produs de PVC supraîncălzit dar nears); - Dual simultan furn si temperatura; - Pragul de temperatura va fi configurabil cu ajutorul software-ul producatoru1ui.	**Specificaţii de performanţă şi condiţii privind siguranta în exploatare:** - Detectează fumul vizibil produs de materiale care ard încet sau mocnit (exemplu mobilier, plastic, fum produs de PVC supraîncălzit dar nears); - Dual simultan furn si temperatura; - Pragul de temperatura va fi configurabil cu ajutorul software-ul producatoru1ui.	
3.	**Condiţii privind conformitatea cu standarde relevante:** - Conform standarde in vigoare EN 54, SR EN 60529	**Condiţii privind conformitatea cu standarde relevante:** - Conform standarde in vigoare EN 54 , SR EN 60529	
4.	**Condiţii de garanţie şi postgaranţie:** - Producătorul va garanta calitatea şi buna funcţionare a produsului timp de 24 luni de la punerea în funcţiune sau de 36 luni de la data livrarii. - Produsul va corespunde normelor tehnice şi standardelor europene.	**Condiţii de garanţie şi postgaranţie:** - Producătorul va garanta calitatea şi buna funcţionare a produsului timp de 24 luni de la punerea în funcţiune sau de 36 luni de la data livrarii. - Produsul va corespunde normelor tehnice şi standardelor europene.	
5.	**Condiţii cu caracter tehnic:** - Nu vor fi luate în consideraţie decât ofertele însoţite de documentaţie completă pentru selecţie şi montaj în limba română. - Vor fi anexate: ▪ instrucţiuni de montaj (scheme de conectare, broşuri, cataloage); ▪ instrucţiuni de exploatare; ▪ buletine de încercări, verificări, probe; ▪ declaratie de conformitate.	**Condiţii cu caracter tehnic:** - Nu vor fi luate în consideraţie decât ofertele însoţite de documentaţie completă pentru selecţie şi montaj în limba română. - Vor fi anexate: ▪ instrucţiuni de montaj (scheme de conectare, broşuri, cataloage); ▪ instrucţiuni de exploatare; ▪ buletine de încercări, verificări, probe; ▪ declaratie de conformitate.	

FC460 Series Detectors

Who this Leaflet is for

This leaflet is aimed at suitably qualified technicians experienced in the design and specification of fire detection and alarm systems, who have also received training.

What this Leaflet Covers

This leaflet is for use when designing a fire detection system, or replacing detectors in an existing system.

Specifications are provided for determining detector suitability. Information is provided on features that are unique to the series.

What this Leaflet does not Cover

This leaflet does not provide the following:

- Information on detection functionality or guidance on detector type choice. This information is provided in the Detectors Product Application & Design Information document.
- Installation information. This is because the detectors simply dock to detector bases, and installation details are provided in the associated base documentation.

Introduction

The detectors are for use in an addressable system, where a number of detectors are placed in key areas around the building.

For a more detailed introduction, refer to the Product Application & Design Information document.

The next few sections provide information common to all the detector variants in the series.

Specifications

Dimensions

- Height: 42 mm, diameter: 108 mm

Fig. 1: Dimensions

Material

- Plastic: Flame Retardant ABS

Electrical characteristics

- The detectors are designed for use in an addressable system which uses the FireClass Digital Protocol.

Temperature Ranges

The temperature ranges are shown in Table 1.

Detector	Operating Temperature (°C)	Storage Temperature (°C)	Relative Humidity
FC460PH	-25 °C to +70	-40 °C to +80	95 % (non-condensing)
FC460P	-25 °C to +70	-40 °C to +80	95 % (non-condensing)
FC460H	-25 °C to +70 short-term: to +90	-40 °C to +80	95 % (non-condensing)
FC460PC	-10 °C to +55	-20 °C to +55	95 % (non-condensing)

Table 1: Temperature Ranges

Weights

The detector weights are shown in Table 2.

Detector	Weight (Kg)
FC460PH	0.092
FC460P	0.092
FC460H	0.081
FC460PC	0.094

Table 2: Weights

Compatible Bases

The detectors are compatible with the 4B and 4B-I Bases.

Approvals

The detectors comply with the following standards:

- Construction Products Directive (CPD), fulfilling the requirements of:
  - EN 54-5:2000 + A1:2002 - Heat Detectors
  - EN 54-7:2000 + A1:2002 + A2:2006 - Smoke Detectors
- CEA 4021 (2003)- MultiSensor Detectors
- VdS 2806 (1999) - Fire Gas Detectors
- Product family standard EN 50130-4 in respect of Conducted Disturbances, Radiated Immunity, Electrostatic Discharge, Fast Transients and Slow High Energy
- EN 61000-6-3 for Emissions

Ordering Information

The ordering numbers for the different detectors are shown in Table 3.

Detector	Order Number
FC460PH	516.460.501
FC460P	516.460.502
FC460H	516.460.503
FC460PC	516.460.504

Table 3: Ordering Numbers

CPD Information

CE

0832

Control Equipment Ltd.
Hillcrest Business Park
Dudley, West Midlands
DY2 9AP UK
12
0832-CPD-1881

EN54-5 and EN54-7
Digital addressable detector for use in fire detection and alarm systems in buildings
FC460PC

CE

0832

Control Equipment Ltd.
Hillcrest Business Park
Dudley, West Midlands
DY2 9AP UK
12
0832-CPD-1882

EN54-5
Digital addressable detector for use in fire detection and alarm systems in buildings
FC460H

CE 0832	CE 0832
Control Equipment Ltd. Hillcrest Business Park Dudley, West Midlands DY2 9AP UK 12 0832-CPD-1883	Control Equipment Ltd. Hillcrest Business Park Dudley, West Midlands DY2 9AP UK 12 0832-CPD-1884
EN54-7 Digital addressable detector for use in fire detection and alarm systems in buildings FC460P	EN54-5 and EN54-7 Digital addressable detector for use in fire detection and alarm systems in buildings FC460PH

FIȘĂ TEHNICĂ E-DFT-Ex

Detector multicriterial de fum și temperatura pentru medii cu pericol de explozie

Nr Crt.	Specificațiile tehnice impuse prin Caietul de sarcini	Corespondența propunerii tehnice cu specificațiile tehnice impuse prin Caietul de sarcini	Producător
0	1	2	3
1.	**Parametrii tehnlci și functionali:** - Material carcasa ABS plastic UV stabilizat - Grad de protectie minim IP 42; - Tensiune nominala: 9,5 - 30 Vcc; - Temperatura de lucru: -20 °C ... +70 °C: - Umiditate relativa: 0-95% (fara condens); - Curent absorbit stand-by: maxim 5 mA; - Curent absorbit alarma: maxim 100 mA - Conexiune electrica: terminale cu șurub; - Compatibil cu cenlrala de incendiu prin transponder.	**Parametrii tehnlci și functionali:** - Material carcasa ABS plastic UV stabilizat - Grad de protectie minim IP 42; - Tensiune nominala: 16 - 28 Vcc; - Temperatura de lucru: -20 °C ... +70 °C: - Umiditate relativa: 0-95% (fara condens); - Curent absorbit stand-by: maxim 1 mA; - Curent absorbit alarma: maxim 93 mA - Conexiune electrica: terminale cu șurub; - Compatibil cu cenlrala de incendiu prin transponder.	**TYCO SAFETY PRODUCTS**
2.	**Specificatii de performanta și conditii privind siguranta in exploatare:** - Detecteaza fumul vizibil produs de materiale care ard încet sau mocnit (exemplu plastic, fum produs de PVC supraîncalzit dar nears); - Marcaj Ex pentru grupa II zona 2; - Temperatura maxima de suprafata T4; - Daca va fi livrat in protecjie intrinseca atunci se va livra și bariera de potențial; - Se va livra cu toate accesoriile necesare bunei funcționari.	**Specificatii de performanta și conditii privind siguranta in exploatare:** - Detecteaza fumul vizibil produs de materiale care ard încet sau mocnit (exemplu plastic, fum produs de PVC supraîncalzit dar nears); - Marcaj Ex pentru grupa II zona 2; - Temperatura maxima de suprafata T4; - Daca va fi livrat in protecjie intrinseca atunci se va livra și bariera de potențial; - Se va livra cu toate accesoriile necesare bunei funcționari.	
3.	**Condiţii privind conformitatea cu standarde relevante:** - EN 54, SR EN 60079-0, SR EN 60529, SR EN 60079-0	**Condiţii privind conformitatea cu standarde relevante:** - EN 54, SR EN 60079-0, SR EN 60529, SR EN 60079-0	
4.	**Condiţii de garanţie şi postgaranţie:** - Producătorul va garanta calitatea și buna funcţionare a produsului timp de 24 luni de la punerea în funcţiune sau de 36 luni de la data livrarii. - Produsul va corespunde normelor tehnice şi standardelor europene.	**Condiţii de garanţie şi postgaranţie:** - Producătorul garantează calitatea şi buna funcţionare a produsului timp de 24 luni de la punerea în funcţiune sau de 36 luni de la data livrarii. - Produsul va corespunde normelor tehnice şi standardelor europene.	
5.	**Condiţii cu caracter tehnic:** - Nu vor fi luate în consideraţie decât ofertele însoţite de documentaţie completă pentru selecţie şi montaj în limba română. - Vor fi anexate:	**Condiţii cu caracter tehnic:** - Nu vor fi luate în consideraţie decât ofertele însoţite de documentaţie completă pentru selecţie şi montaj în limba română. - Vor fi anexate:	

	▪ instrucţiuni de montaj (scheme de conectare, broşuri, cataloage); ▪ instrucţiuni de exploatare; ▪ buletine de încercări, verificări, probe; ▪ declaratie de conformitate.	▪ instrucţiuni de montaj (scheme de conectare, broşuri, cataloage); ▪ instrucţiuni de exploatare; ▪ buletine de încercări, verificări, probe; declaratie de conformitate.	

MR601TEx INTRINSICALLY SAFE ENHANCED OPTICAL SMOKE DETECTOR

PRODUCT APPLICATION AND DESIGN INFORMATION

1. INTRODUCTION

The MR601TEx Intrinsically Safe High Performance Optical Smoke Detector forms part of the M600Ex series of plug in detectors for ceiling mounting. The detector plugs into the 5BEx 5" Universal IS Base and is intended for two-wire operation on the majority of the control equipment currently manufactured by the company. The Intrinsically Safe High Performance Optical detector is available in one sensitivity setting only.

2. INTRINSIC SAFETY

The detectors are for use in potentially explosive gas and dust atmospheres (zone 0 gas, zone 20 dust).

The detectors are designed to comply with EN/IEC 60079-0:2006, EN/IEC 60079-11:2007 and EN/IEC61241-11:2006 for Intrinsically Safe apparatus. They are certified:

ATEX code:	**Ex II 1 GD CE 1180**
Certificate:	**BAS01ATEX1134X**
Gas/Dust code:	**Ex ia IIC T5** **Ex iaD 20 T100°C**
IECEx Certificate:	**IECEx BAS 07.0056X**

These detectors are designed and manufactured to protect against other hazards as defined in paragraph 1.2.7 of Annex II of the ATEX Directive 94/9/EC.

2.1 DETECTOR USE

It is recommended that the detector is used in conjunction with a suitable isolator or shunt diode safety barrier in a certified Intrinsically Safe system, ie, System 620.

2.2 SPECIAL CONDITIONS OF SAFE USE

The apparatus has a plastic enclosure which constitutes a potential electrostatic hazard. The enclosure must be cleaned only with a damp cloth.

3. OPERATING PRINCIPLE

The MR601TEx operates by sensing the optical scatter from smoke particles generated in a fire. While the optical scatter detector can give good detection performance for the majority of fires, some fast burning fires produce little visible smoke and some produce very black smoke, neither of which are easily detected by the optical scatter detector. (Such fires are represented in EN54-7 by Polyurethane and Heptane type fires respectively). These fires do, however, produce high heat outputs with an associated rise in air temperature.

The detector has been designed to offer improved detection of such fires, by detecting the rapid rate-of-rise of air temperature and under these conditions, increasing the smoke detection sensitivity. This gives an earlier detection of such fires and a broader detection capability than a standard detector.

The MR601TEx detector has two sensing systems as follows:

- An optical chamber with associated electronics to measure the presence of smoke by light scatter.
- A thermistor with its associated electronics to detect the presence of hot air draughts or high temperatures.

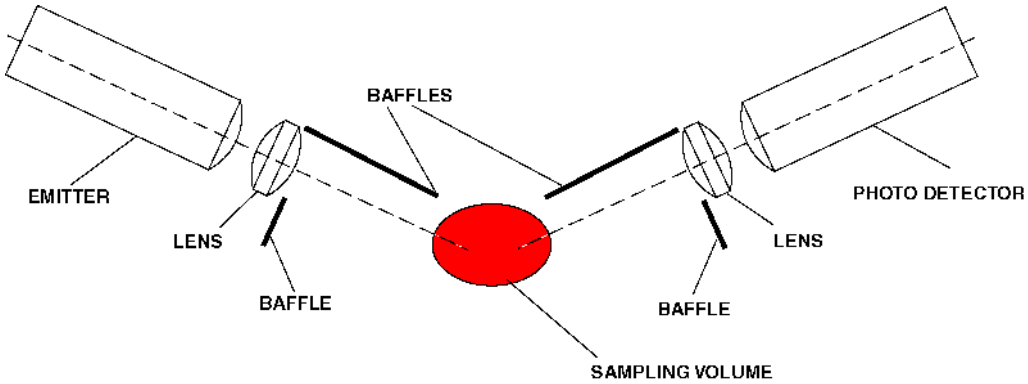

Fig. 1 Optical System Schematic

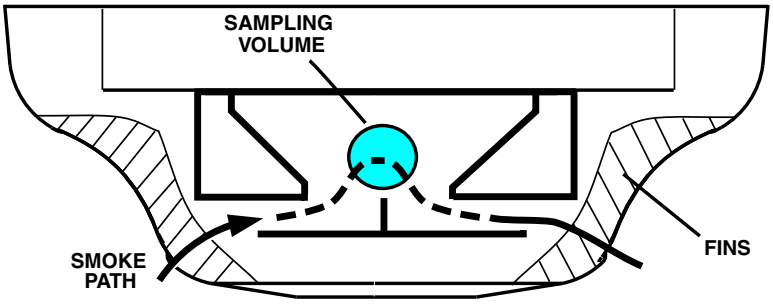

Fig. 2 Measuring Chamber Showing Smoke Flow Path

3.1 OPTICAL SYSTEM

The MR601TEx detects visible particles produced in fires by using the light scattering properties of the particles. The detector uses the optical arrangement shown diagrammatically in Fig. 1.

The optical system consists of an infra-red emitter and receiver, with a lens in front of each, so arranged that their optical axes cross in the sampling volume. The emitter, with its lens, produces a narrow beam of light which is prevented from reaching the receiver by the baffles. When smoke is present in the sampling volume a proportion of the light is scattered, some of which reaches the receiver. For a given type of smoke, the light reaching the photodetector is proportional to the smoke density. The amplified output from the sensor can be used to activate an alarm circuit at a predetermined threshold.

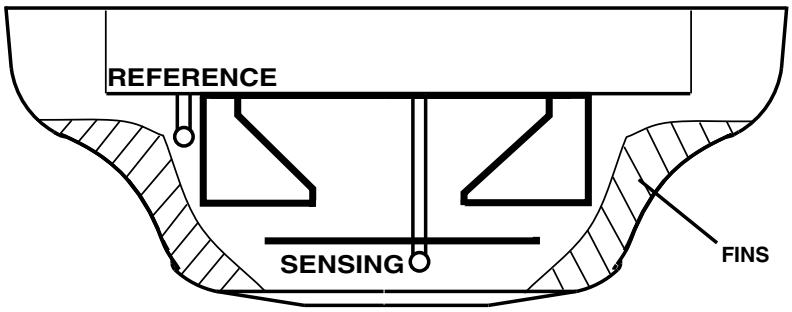

Fig. 3 Thermal Measuring System

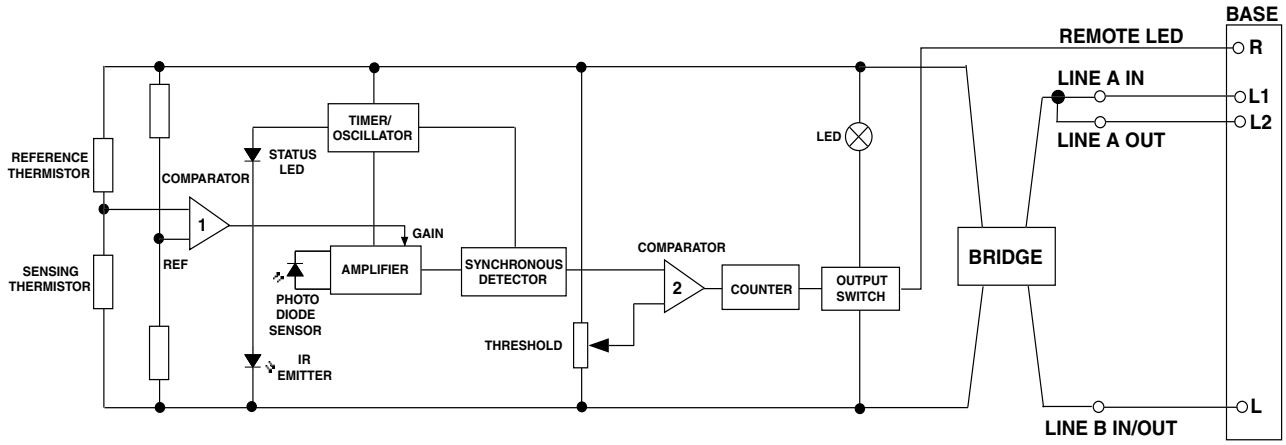

Fig. 4 Block Schematic of Detector

3.2 FEATURES OF MEASURING CHAMBER

The MR601TEx uses vertical chevrons to exclude ambient light.

Smoke incident on the detector is channelled into the detector by the outer cover fins (Fig. 2) and passes through the vertical chevrons. The smoke is deflected into the optical chamber and through the sampling volume before passing out the other side of the detector.

The emitter (Fig. 1) is a GaAlAs solid state type operating in the near infra-red (880nm peak), while the detector is a matched silicon photodiode. These devices, together with their associated lenses, are held in place by the chamber mouldings. The design of the optical system is such that the presence of small insects such as thrips, should not cause false alarms.

3.3 THERMAL MEASURING SYSTEM

Refer to Fig. 3.

This is designed to detect the presence of horizontally moving hot air draughts moving across the ceiling which occur in a fast burning fire.

The measuring system consists of two fast responding negative temperature thermistors. A sensing thermistor is located above the labyrinth under the cover in the airstream and will detect any sudden changes in the air temperature or draughts of hot air moving across the ceiling. The second thermistor is located out of the airflow within the smoke labyrinth and has a longer time constant and is used as a temperature reference to compare the sensing thermistor against. At a given temperature differential between the two thermistors, the comparator will switch and increase the gain of the amplifier, thereby increasing the sensitivity of the sensor. Fins located on the top of the labyrinth are designed to increase air turbulence and the efficiency of the sensing thermistor.

3.4 CIRCUIT OPERATIONS

A simplified block schematic of the detector is given in Fig. 4.

The emitter is subjected to a pulse stream only every 10s in order to reduce the quiescent current. The pulse signal received by the photodiode is fed to a high-gain amplifier. If smoke is present, the pulse signal received varies in proportion to the smoke density.

The amplifier output is fed via an integrator, the output of which is compared to a preset threshold level. Sophisticated synchronous detection techniques are used to reduce the effects of noise and spurious transients.

The gain of the front end amplifier is controlled by the thermistor bridge circuit. When the temperature differential between the two thermistors exceeds a certain value, the amplifier gain increases. Under these conditions the High Performance Optical detector is more sensitive to the presence of smoke and is said to be in ‘Enhanced Mode’.

When the detector is in the ‘Enhanced Mode’, the detector will only alarm if a smoke signal is present. The presence of rising temperature alone cannot cause an alarm.

If the signal amplitude exceeds a threshold level, then the emitter samples the smoke every two seconds. The sample period remains at two seconds if the signal is above the threshold. When the counter has counted three consecutive pulses above the threshold, the output stage is latched into the alarm condition. If however, the amplitude of the second or third pulse is below the threshold, then the pulse period reverts to 10 seconds and the counter resets. The switching of the output stage lights the alarm LED and provides drive for the remote LED indicator.

The critical front end of the circuit is run off a 12V regulator to make it independent of supply voltage.

The detector is polarity conscious.

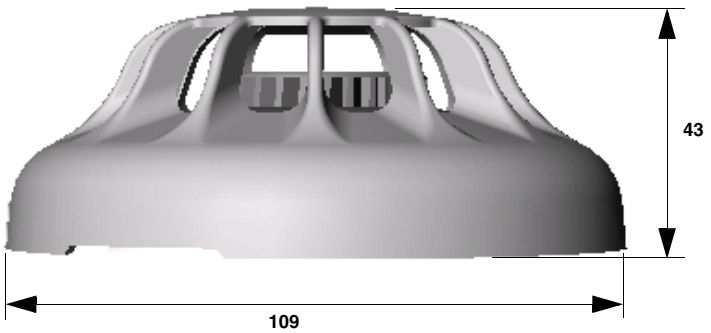

Fig. 5 Overall Dimensions of MR601TEx

3.5 WIRING

Loop cabling is connected to base terminals as follows:

L	-VE
L1	+VE IN
L2	+VE OUT
R	Remote LED Drive

4. MECHANICAL CONSTRUCTION

The major components of the detector are:

- Body Assembly
- Printed Circuit
- Optical Chamber
- Optical Chamber Cover
- Thermistor
- Light Pipe
- Outer Cover

4.1 ASSEMBLY

The body assembly consists of a plastic moulding which has four embedded detector contacts which align with contacts in the 5BEx base. The moulding incorporates securing features to retain the detector in the base.

The PCB is soldered to the body contacts. These contacts act as a mechanical fixture during assembly and provide electrical contact between the contacts and the PCB. The PCB is then potted.

The chamber cover is clipped to the body over the optical chamber ensuring the thermistor protrudes through the cover. The light pipe is slotted into the chamber cover. Finally, the outer cover is clipped to the body.

Fig. 6 MR601TEx Enhanced Optical Smoke Detector with 5BEx 5” Base

4.2 TEST AND FINAL ASSEMBLY

The detectors are fully functionally tested and their sensitivities set in a smoke tunnel to ensure correct calibration. The sealing ring and labels are then fitted to complete detector assembly.

5. TECHNICAL SPECIFICATION

5.1 MECHANICAL

Dimensions

The dimensions of the MR601TEx detector are shown in Fig. 5.

Materials

Body and cover:	FR110 ‘BAYBLEND’ Fire Resistant

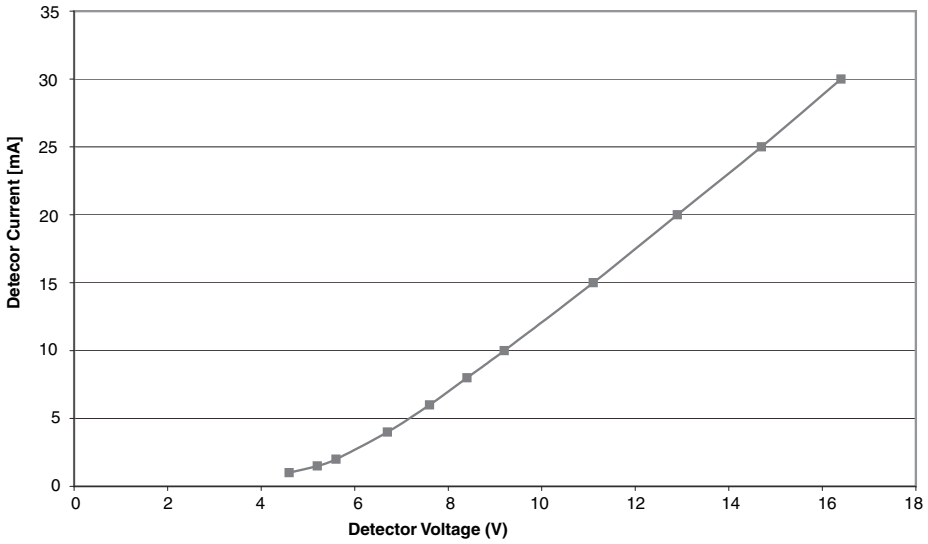

Fig. 7 Alarm Load Presented to the Controller

Weight

Detector:	0.128kg
Detector + base:	0.174kg

5.2 ENVIRONMENTAL

Operating Temperature:	-20°C to +70°C (please see note below).
Storage Temperature:	-25°C to +80°C

Note:

1) ***The operating temperatures quoted exceed the ATEX Certification limits.***
2) *Operation below 0°C is not recommended unless steps are taken to eliminate condensation and hence ice formation on the detector.*

Relative Humidity:	95% non-condensing

Shock:	)	
Vibration:	)	
Impact:	)	To EN54-7
Corrosion:	)	

5.3 ELECTROMAGNETIC COMPATIBILITY

The detector complies with the following:

Product family standard EN50130-4 in respect of Conducted Disturbances, Radiated Immunity, Electrostatic Discharge, Fast Transients and Slow High Energy

EN 61000-6-3 for Emissions

5.4 ELECTRICAL CHARACTERISTICS

The alarm load presented to the controller is shown in Fig. 7.

The following characteristics shown in Table 1 are taken at 25°C with a supply voltage of 20V unless otherwise specified.

Characteristics	Min.	Typ.	Max.	Unit
Operating Voltage (d.c.)	16	20	28	V
Average Quiescent Current	90		110	µA
Switch-on-Surge			130	µA
Stabilisation Time			60	sec
Alarm Current	See Fig. 6			mA
Holding Voltage			5	V
Holding Current			1	mA
Reset Time		2	5	sec
Remote LED Drive	Remote LED via 3.4k			

Table. 1 Electrical Characteristics

Intrinsic Safety Rating:

Maximum Voltage for safety (U_i):	28V
Maximum Current for Safety (I_i):	93mA
Maximum Power Input (P_i):	650mW
Equivalent Inductance (L_i):	0
Equivalent Capacitance (C_i):	0

5.5 PERFORMANCE CHARACTERISTICS

The fundamental parameter used to define the sensitivity of an optical smoke detector is the level of smoke which will just produce an alarm under 'ideal' conditions. This parameter, known as the response threshold value, is normally measured in a smoke tunnel and is defined in terms of the obscuration produced by the smoke over a one metre path. The response threshold value is normally given in dB/m, (or % per m).

Interpretation of response threshold value is somewhat complicated by the fact that the measurement is given in terms of obscuration, whereas the detector works by scattering from the smoke particles. The response threshold (m) value will therefore, depend on the colour of the smoke. Black smokes give less scattering than light smokes for given values of obscuration as shown in Fig. 8.

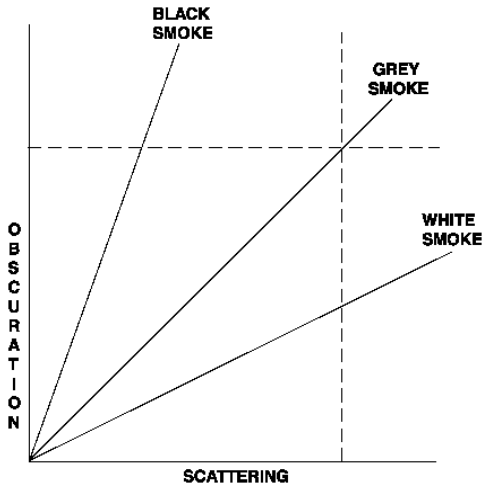

Fig. 8 Response Threshold vs Smoke Colour

Sensitivities are invariably specified for 'grey' smokes as produced by typical smouldering fires. Values for the MR601TEx are given below.

5.5.1 RESPONSE TO RATE OF CHANGE OF TEMPERATURE

The detector will not be enhanced by slow rates of change of temperature, or by cold air draughts moving across the ceiling creating negative rates of change of temperature. The detector is designed to detect sudden horizontal draughts of hot air produced by fast burning fires. The enhancement switching point has been set to allow the detection of TF1 type fires.

Normal response threshold = 0.19 dB/m, 2.7%/m typical.

Enhanced mode threshold = 0.08 dB/m, 1.1%/m typical.

5.6 RESPONSE TO FIRE TESTS

The response of an optical scatter detector to a fire will depend to a large extent on the colour of the smoke produced in the fire. However, other factors such as the detector smoke entry characteristics, the development of the fire and the thermal lift produced by the fire are important. In order to evaluate the response under realistic conditions, detectors are subjected to test fires which cover a range of fire types. These tests are defined in EN54 Pt 7. The MR601TEx passes the following Fire Tests:

TF1	open cellulosic (wood-flaming)
TF2	smouldering pyrolysis
TF3	glowing smouldering (cotton)
TF4	open plastics (polyurethane foam)
TF5	liquid (n-heptane)

Table 2: Response to Fire Tests

Note: TF2 to TF5 are mandatory test fires required to meet EN54 Pt 7.

The MR601TEx is designed to respond to the mandatory tests TF2 to TF5 as required by BS5445 Pt 7. The MR601TEx gives an earlier response to TF5 fires than the MR601 due to its thermal circuit detecting the heat generated by this test of fire and the MR601TEx being 'enhanced'. For the same reason the MR601TEx will detect test fire TF1 (open wood cellulosic flaming fire) which is not normally detected by optical smoke detectors - demonstrating the detectors broader detection capability.

The MR601TEx does not respond to TF6 liquid (methylated spirit) which although having a rapidly rising temperature, does not generate any optical scattering. This shows that the High Performance Optical detector will not respond to hot air draughts without the presence of smoke.

6. INSTALLATION RECOMMENDATIONS

It is not recommended that the MR601TEx be installed in areas where it is likely to be regularly enhanced, since in this condition the detector is extra sensitive and there is a possibility of unwanted alarms from low ambient smoke levels.

The MR601TEx is designed to become enhanced by detecting a rapid temperature rise (>10°C) in air moving horizontally across the ceiling. Siting sensors in positions where air is being blown through the detector should therefore, be particularly avoided, eg, close to ceiling ducts or ceiling mounted industrial heaters; or areas of forced ventilation, such as ducts and under floor voids of computer suites.

Also, not recommended are areas open to the outdoors, such as cargo handling bays, or areas where the detector may become contaminated.

The MR601TEx is not recommended for use in applications where a heater jacket is required.

The MR601TEx is primarily aimed at benign environments.

7. CPD INFORMATION

CE

0832

Tyco Safety Products
Dunhams Lane
Letchworth SG6 1BE
UK

06

0832-CPD-0248

EN 54-7: 2000 + A1: 2002

Conventional Intrinsically Safe high performance photoelectric smoke detector with heat enhancement for use in fire detection and alarm systems in buildings

MR601TEx

Application & Design	01B-04-D12
Installation Instructions	01B-04-I3
Service Instructions	01B-04-S2

8. DETECTOR IDENTIFICATION

The detector is identified by the logo label, as shown in Fig. 9.

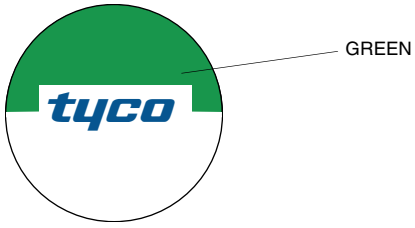

Fig. 9 Detector identification

9. ORDERING INFORMATION

MR601TEx Intrinsically Safe Enhanced Optical Smoke Detector:	516.054.011.Y
5BEx 5” Universal IS Base:	517.050.023

JM/jm

5th May 2010

DOCUMENT CONTROL NUMBER /

5BEx 5" UNIVERSAL INTRINSICALLY SAFE BASE AND ACCESSORIES FOR USE WITH THE 811Exn SERIES DETECTORS PRODUCT APPLICATION & DESIGN INFORMATION

1. 5BEx 5" UNIVERSAL BASE

The 5BEx 5" Universal Base is compatible with M600Ex, MX 800Ex and the 800Exn ranges of Detectors. This document describes its use with the 800Exn series of detectors. Thus, a ceiling-mounted detector comprises the specific detector type, plus a 5BEx 5" Universal Base. The range is intended for two-wire operation.

The detector base is made of fire resistant FR110 'BAYBLEND'.

The base can be used with the DHM-5B.

The base accepts an address label carrier from the detector when it is fitted to the base. The base also has four electrical contacts which align with the contacts on the detector once the latter is fitted and fully latched into position.

The raised rib is aligned with a raised rib on the detector when the detector is in the fully home position.

Loop cabling is connected to base terminals L (-ve) and L1 (+ve).

A drive is provided for a remote indicator connected between loop positive and terminal R.

Terminal L2 is not used.

When the detector is mounted on the base, the detector LED provides a visual indication of its status through 360 degrees.

The detector may be locked in position by inserting a locking key which is part of the detector moulding. This is broken from the sprue and inserted in the locking key slot.

Special Conditions for Safe Use:.

1) When the detector is removed, the base must be provided with a degree of protection of at least IP54.
2) This apparatus does not meet the resistance to light requirements. It must be installed away from direct sunlight.
3) When installed, adequate precautions must be taken to ensure that cabling is restrained and not subject to any stress.

THE FOLLOWING LEGEND IS PRINTED ON THE RIM OF THE BASE:
5BEx FOR Ex/EXN DETECTORS ONLY ELECTROSTATIC HAZARD : CLEAN ONLY WITH A DAMP CLOTH

Fig. 1 5BEx 5" Universal Base

Registered Company: Thorn Security Ltd. Registered Office: Dunhams Lane Letchworth Garden City Hertfordshire SG6 1BE

1.1 TECHNICAL SPECIFICATION

Mechanical Construction

See Fig. 1 and Fig. 2.

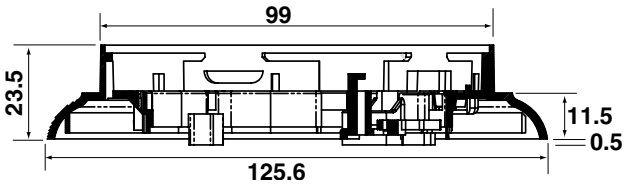

Fig. 2 Overall Base Dimensions

Material

Base:	FR110 'BAYBLEND' Flame Retardant
Base Contacts:	Stainless steel/Nickel plated
Base screws:	Steel/Zinc plated

Weight

Base:	0.064kg

Environmental

Operating Temperature:	-25°C to +70°C (+90°C for short periods)
Storage Temperature:	-40°C to +80°C
Relative Humidity:	95% non-condensing

1.2 ELECTRICAL CHARACTERISTICS

Through supply voltage:	40V dc max with addressable waveform (polarity conscious)

The Base has four terminals:

R	Remote LED connector
L	-ve IN/OUT
L1	+ve IN/OUT
L2	Not connected

1.3 CABLING

Cables are to be selected in accordance with Publication 17A-02-D. Only Two loop connections L and L1 are provided on the base itself, the input and output connection being made at the same terminal. The monitoring system will allow 'teed' or 'spur' junctions which may be used to simplify the installation cabling. However, a maximum of two 1.5mm^2 cables may be connected at any one terminal. End of line devices are not required on addressed circuits, see Fig. 3 and Fig. 4.

It is suggested that the he loop cable should be run in a metal cable tray and the cable secured with metal fastners at approximately half metre intervals.

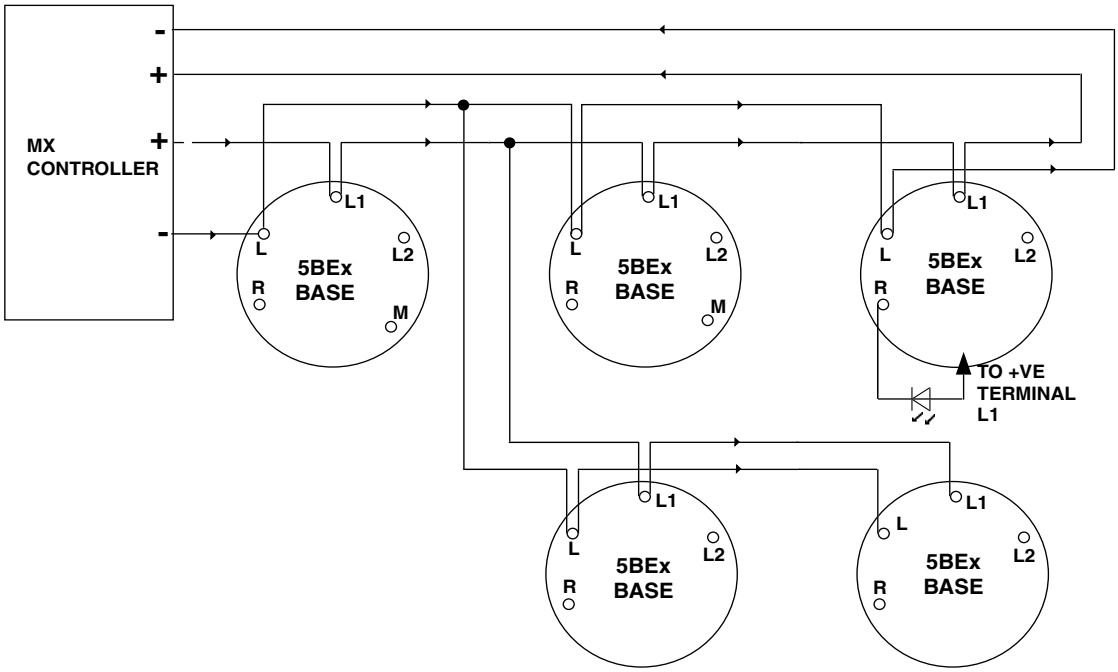

Fig. 3 Simplified Circuit Wiring Diagram

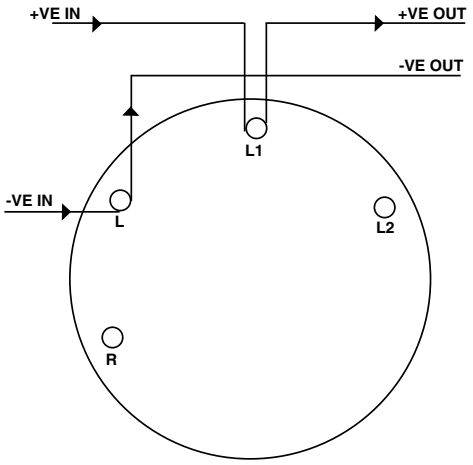

Fig. 4 Terminal Designation

2. ACCESSORIES

The following accessories are for use with the 5BEx 5" Universal Base and MX 800 Series detectors:

- DHM-5B Deckhead Mounting
- Detector Locking Device*
- LED aperture plug*
- Lock Release Tool
- Address Label Carrier
- Shorting Adaptor
- Base Dust Cover
- Detector Dust Cover
- Detector Removal Tool
- 800RIL Remote Indicator
- 800HL Remote Indicator

* These devices are located on the base and must be broken off to be used.

2.1 DHM-5B DECKHEAD MOUNTING

The Deckhead Mounting Kit is designed to be used with the Series 800Exn detectors to ensure that when used with cable glands the loop cable is secure.

The housing is to be secured with two No. 8 x 1 inch countersunk zinc plated and passivated steel screws (or equivalent) at the fixing centres shown in (Fig. 5). The surface chosen for the mounting should be flat over the area of the underside of the housing to ensure a stable fixing and strong enough to take the weight of the mounting, detector base and sensor.

The Deckhead Mounting Kit comprises:

a) A housing having 20/25mm breakouts for conduit connection.

b) Two 4.2 x 25mm long, self tapping posidrive pan head screws to secure the detector base.

c) Sealing gasket.

The deckhead mounting also has an option of being welded to metal ceilings via two 6.3 x 25mm (No. 14 x 1") pan head, steel, zinc coated, self tapping screws.

2.1.1 TECHNICAL SPECIFICATION

Dimensions

Height:	40mm
Width:	163mm
Depth:	132mm
Weight:	200g

Material

Body:	20% glass filled P.B.T.
Base Contacts:	Stainless steel/Nickel plated
Base screws:	Steel/Zinc plated

Environmental

Storage Temperature:	-30°C to +75°C
Operating Temperature:	-25°C to +70°C
Relative Humidity:	up to 95% RH (non-condensing)

Vibration:	Designed to meet the requirements of GEI11-052 (1977).
Corrosion:	The functional base passes the SO_2 corrosion test from GEI11-052 (1977).
IP Rating:	IP55 (Interface point between 5” base and DHM-5B)
Flamability:	UL 94 V-0 @ 1.5mm

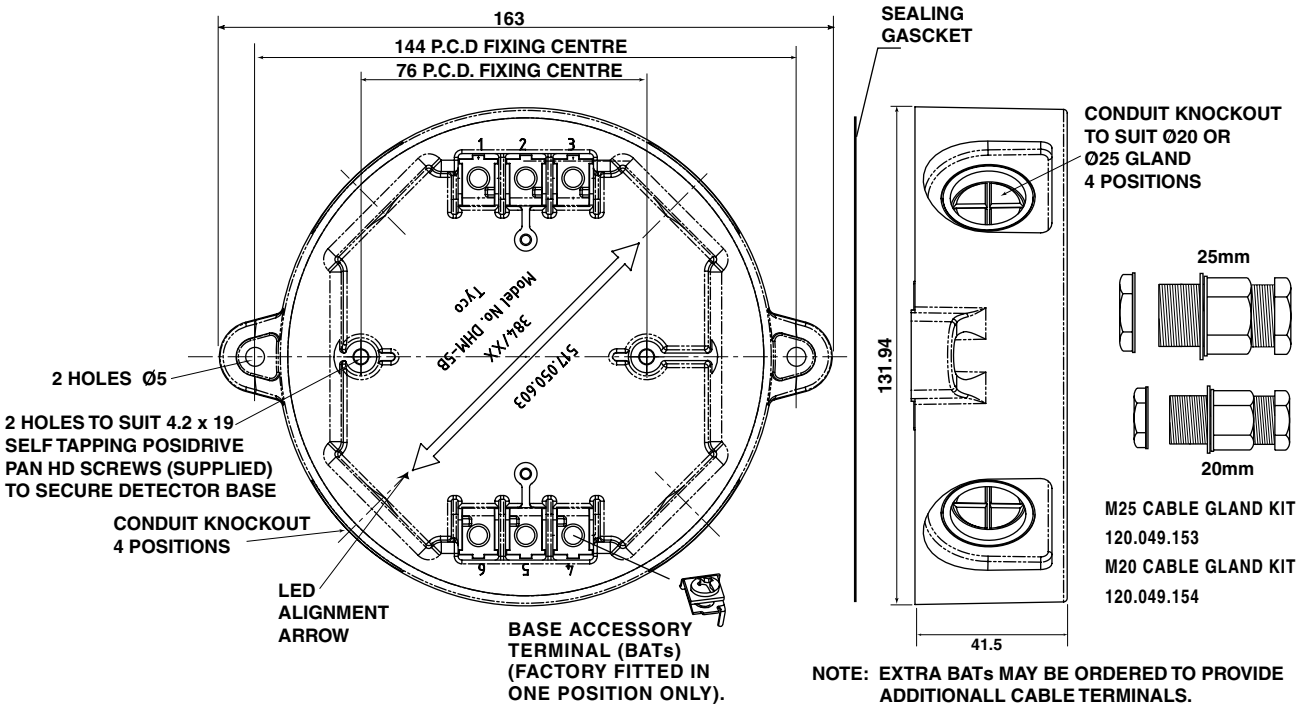

Fig. 5 DHM-5B Deckhead Mounting

2.2 DETECTOR LOCKING DEVICE

The detector locking device is part of the base moulding and must be broken off to be inserted into the locking aperture. The detector may be locked in position by inserting the optional locking device (Fig. 6) in the base before fitting the selected detector. The detector may then only be removed by inserting the unlocking tool into the hole on the detector cover (an example of a simple locally manufactured detector unlocking tool is shown in Fig. 8). This depresses the locking arrangement allowing the detector to be removed.

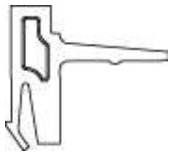

Fig. 6 Locking Device (not to scale)

2.3 LED APERTURE PLUG

An LED aperture plug (Fig. 7) is part of the base moulding and must be broken off to be fitted to the LED aperture.

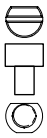

Fig. 7 LED Aperture Plug (not to scale)

2.4 LOCALLY MANUFACTURED LOCK RELEASE TOOL

A lock release tool for the detector can be locally manufactured, Fig. 8 gives the dimensions for the tool. The example shown is an R.S. Components screwdriver part number 544-689.

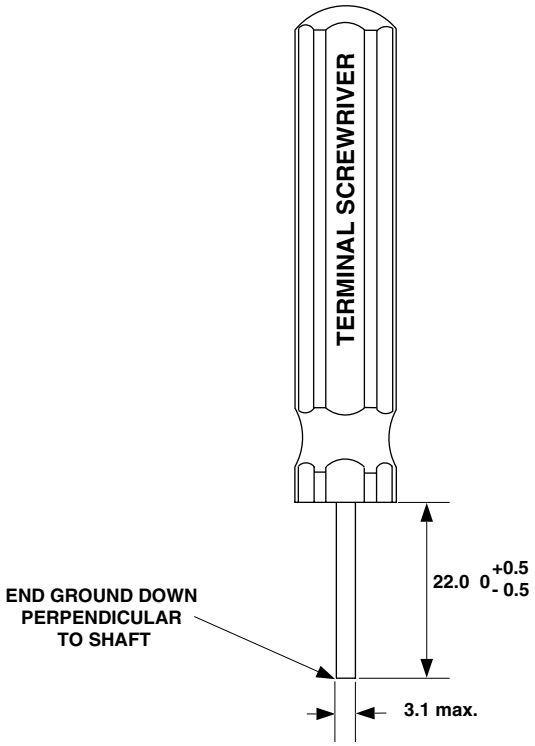

Fig. 8 Locally Manufactured Unlocking Tool

2.5 ADDRESS LABEL CARRIER

The address label carrier (see Fig. 9) is fitted to the detector before mounting on the base. When the detector is mounted to the base, and turned clockwise until fully located on the base, the address label carrier is transferred to the base. If the detector is removed the address label carrier remains on the base.

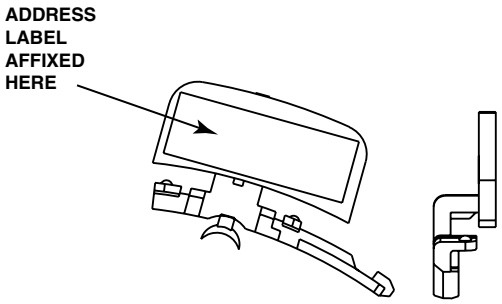

Fig. 9 Address Label Carrier

The address label carrier is made from FR110 'BAYBLEND' Flame Retardant.

2.6 SHORTING ADAPTOR

The shorting adaptor (Fig. 10) is used to short terminals L and L1 to allow cable resistance, capacitance and inductance checks to be carried out.

Fig. 10 Shorting Adaptor

The shorting adaptor is made from FR110 'BAYBLEND' Flame Retardant and is the same size as a detector.

2.7 DETECTOR DUST COVER

The detector dust cover (Fig. 11) forms part of the detector packaging. When the detector is removed from the packaging the top of the packaging is also removed. The dust cover should remain fitted until the detector is commissioned.

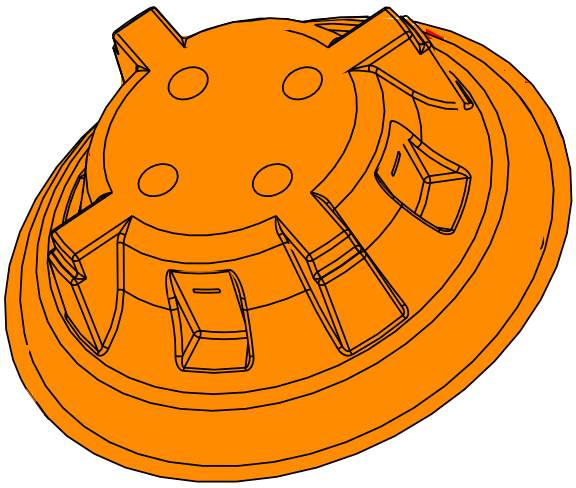

Fig. 11 Dust Cover

The dust cover is made of transparent orange polycarbonate.

2.8 BASE DUST COVER

A base dust cover (Fig. 12) should be fitted to the base after it is installed and remain fitted until a detector is inserted.

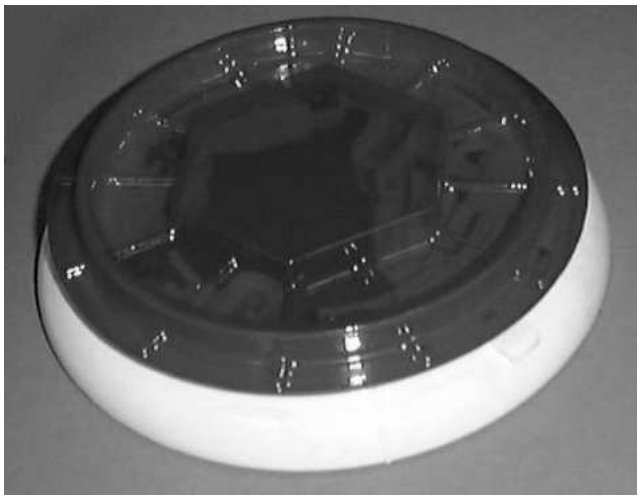

Fig. 12 Base Dust Cover

2.9 DETECTOR CHANGER

The detector Changer (Fig. 13 and Fig. 14) is used to remove/replace detectors from/to a detector base. It is also used to remove the dust cover and engage the temporary park plunger. Extension poles are available which permit the detector to be inserted or removed from high sitings.

The metal slides are retained by wing nuts and are used in two positions, fully up and fully down. In the fully up position, it is used to remove/replace a detector. In the fully down position, it is used to remove the dust cover and to engage the temporary park plunger.

Fig. 13

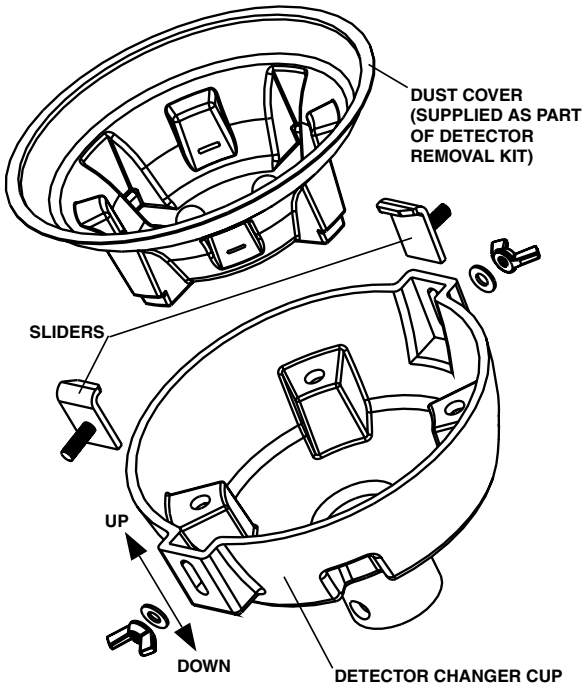

Fig. 14 Detector Changer

2.9.1 TECHNICAL SPECIFICATION

Dimensions

Height:	40.5mm
Width:	145.5mm
Depth:	145.5mm
Weight:	0.062kg

Material

Body:	3mm Polycarbonate
Sliders/Wing Nuts:	Stainless Steel

2.10 801RIL REMOTE INDICATOR

The 801RIL Remote Indicator (Fig. 15) is used where a detector LED is not visible, ie, when the detector is mounted in a roof void, lift shaft etc.

The 800RIL is mounted to a single-gang electrical box and is supplied with 2 x M3.5 screws.

Fig. 15 801RIL Remote Indicator

Electrical Characteristics:

Current consumption at 37.5V dc:

Standby	Alarm
0.0mA	3.0mA

2.11 801HL REMOTE LED INDICATOR

The 800HL Remote Indicator (Fig. 16) is used where a detector LED is not visible ie, when the detector is mounted in a roof void, lift shaft etc.

The 800HL provides a larger indicator for use in place of the 801RIL when longer distances are involved or in VdS influenced markets.

The 800HL can be mounted to any suitable flat surface and has fixing centres at 60 and 80mm.

Features include:

- High Intensity red LEDs
- Monitors up to four detectors

Dimensions (HWD):

Assembly: 85 x 85 x 38mm

Electrical Characteristics:

Current consumption:

Standby: 0

Alarm: 5mA

Fig. 16 800HL Remote Indicator

3. ORDERING INFORMATION

5BEx 5" Universal Base:	517.050.023
Address Flag Labels Loop A (white):	516.800.931
Address Flag Labels Loop B (yellow):	516.800.932
Address Flag Labels Loop C (purple):	516.800.933
Address Flag Labels Loop D (green):	516.800.934
Address Flag Labels - Loop E (Grey)	516.800.935
Address Flag Labels - Loop F (Blue)	516.800.936
Address Flag Labels - Loop G (Orange)	516.800.937
Address Flag Labels - Loop H (Red)	516.800.938
Detector Removal Tool:	516.800.917
Shorting Adaptor:	517.050.002.A
801RIL Remote Indicator:	516.800.908
800HL Remote Indicator:	516.800.909
DHM-5B Deckhead Mounting:	517.050.603
Base Accessory Terminal (pack of 10):	517.050.612
M20 Cable Gland Kit:	120.049.154
M25 Cable Gland Kit:	120.049.153

JM/ds

7th April 2006

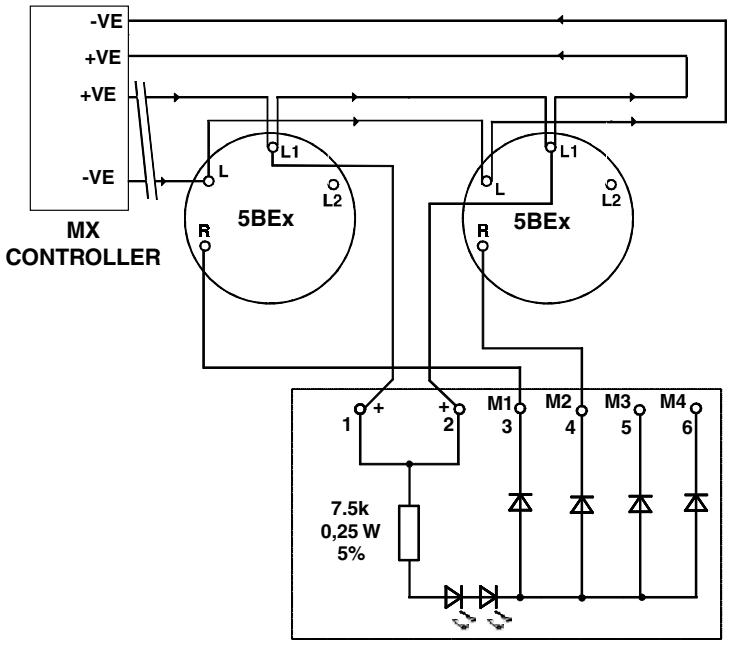

Fig. 17 800HL Simplified Wiring

FIRE SYSTEMS PRODUCTS

Tyco DHM-5B

Deckhead Mounting

INFORMATION SHEET

DESCRIPTION

The Deckhead Mounting is used when detectors are fitted in environments that can adversely affect the base terminals eg. particularly damp or dirty. It can be used with Tyco 600/800 Series detectors with 5B or 5BI bases and also with the Simplex range of detectors. Only detectors suitable for the environment should be used - consult bulletin GPBD0018. The Deckhead Mounting is secured to a suitable surface that is flat over the area of the underside of the Deckhead, using two 4.2 dia. countersunk screws at 144mm fixing centres. Two pan head 4.2 x 25mm (8-32x1") screws are supplied for fixing the detector base. When Tyco 600/800 Series detectors are to be used, the Deckhead Mounting is aligned so that the arrow which is embossed in the bottom is in line with the direction required for visual inspection of the detector LED. Where Simplex detectors are used, the LED location is at 90 degrees to the arrow.

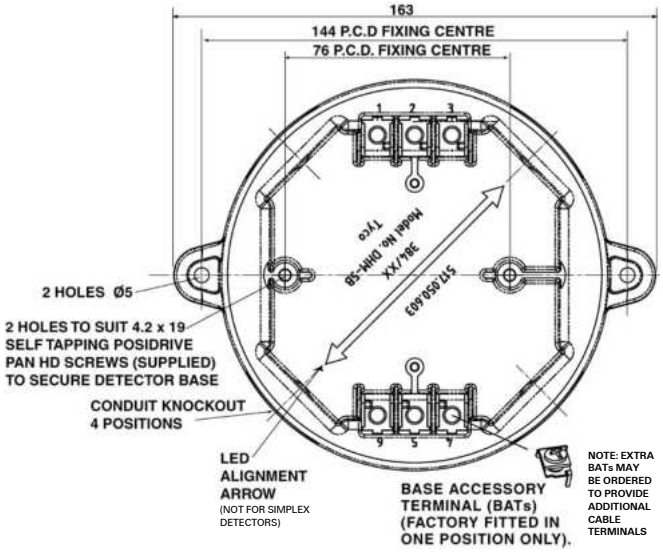

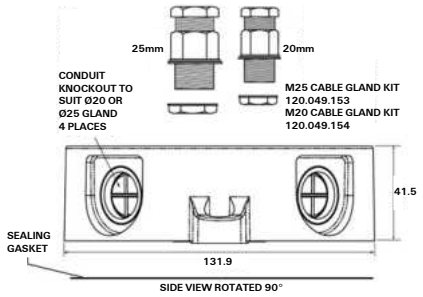

SPECIFICATIONS

Mechanical

Overall Dimensions:	
Height	41.5mm
Width	163mm
Weight	200g
Material	20% glass filled P.B.T.

Part Numbers

DHM-5B	517.050.603
M20 Gland	120.049.154
M25 Gland	120.049.153
Base Accessory	517.050.612
Terminal Kit (pack of 10)	

Environmental

Ambient Temperature	−25°C to +70°C
Storage Temperature	−30°C to +75°C
Relative Humidity	up to 95% (non cond.)
Ingress Protection	IP55 (interface of 5B Base & DHM-5B)

The Deckhead Mounting comprises:

- Housing having 4x 20/25mm breakouts for conduit connection
- Two 4.2 x 25mm long, self tapping posidrive pan head screws to secure the detector base
- Sealing gasket

tyco / Safety Products

www.tycosafetyproducts-anz.com

Issue 2

FISA TEHNICA E-DM
Declansator manual

Nr Crt.	Specificațiile tehnice impuse prin Caietul de sarcini	Corespondența propunerii tehnice cu specificațiile tehnice impuse prin Caietul de sarcini	Producător
0	1	2	3
1.	**Parametrii tehnici şi funcţionali:** - Material carcasa PC/ABS plastic, culoare roșu similar RAL 3020; - Grad de protecție IP 66/67; - Temperatura de funcționare : -40 °C ... + 70 °C; - Umiditate relativa: 0-95% (fără condens); - Conexiune electrica: terminale cu șurub max. 1,5mm2 (AWG 30-14) ; - Reset cu cheie; - Indicator alarma: LED roșu; - Cablare pe 2 fire, instalare simpla; - impedanța in alarma : 680 Ohm -jumper tăiat - 2 micro contacte NO, NC - 30V/1A - Compatibil cu centrala de incendiu	**Parametrii tehnici şi funcţionali:** - Material carcasa PC/ABS plastic, culoare roșu similar RAL 3020; - Grad de protecție IP 66/67; - Temperatura de funcționare : -40 °C ... + 70 °C; - Umiditate relativa: 0-95% (fără condens); - Conexiune electrica: terminale cu șurub max. 1,5mm2 (AWG 30-14) ; - Reset cu cheie; - Indicator alarma: LED roșu; - Cablare pe 2 fire, instalare simpla; - impedanța in alarma : 680 Ohm -jumper tăiat - 2 micro contacte NO, NC - 30V/1A - Compatibil cu centrala de incendiu	BENTEL SECURITY
2.	**Specificaţii de performanţă şi condiţii privind siguranta în exploatare:** - Conform standard EN54-11:2001/A1:2005, tip A - Utilizabil la sistemele convenționale de antiincendiu	**Specificaţii de performanţă şi condiţii privind siguranta în exploatare:** - Conform standard EN54-11:2001/A1:2005, tip A - Utilizabil la sistemele convenționale de antiincendiu	
3.	**Condiţii privind conformitatea cu standarde relevante:** - conform standarde in vigoare EN 54-11,type A, - EN 50130-4; - ISO 384;	**Condiţii privind conformitatea cu standarde relevante:** - conform standarde in vigoare EN 54-11,type A, - EN 50130-4; - ISO 384;	
4.	**Condiţii de garanţie şi postgaranţie:** - Producătorul va garanta calitatea şi buna funcţionare a produsului timp de 24 luni de la punerea în funcţiune sau de 36 luni de la data livrarii. - Produsul va corespunde normelor tehnice şi standardelor europene.	**Condiţii de garanţie şi postgaranţie:** - Producătorul va garanta calitatea şi buna funcţionare a produsului timp de 24 luni de la punerea în funcţiune sau de 36 luni de la data livrarii. - Produsul va corespunde normelor tehnice şi standardelor europene.	
5.	**Condiţii cu caracter tehnic:** - Nu vor fi luate în consideraţie decât ofertele însoţite de documentaţie completă pentru selecţie şi montaj în limba română. - Vor fi anexate: ▪ instrucţiuni de montaj (scheme de conectare, broşuri, cataloage); ▪ instrucţiuni de exploatare; ▪ buletine de încercări, verificări, probe; ▪ declaratie de conformitate.	**Condiţii cu caracter tehnic:** - Nu vor fi luate în consideraţie decât ofertele însoţite de documentaţie completă pentru selecţie şi montaj în limba română. - Vor fi anexate: ▪ instrucţiuni de montaj (scheme de conectare, broşuri, cataloage); ▪ instrucţiuni de exploatare; ▪ buletine de încercări, verificări, probe; declaratie de conformitate.	

FireClass
FC421CP

PULSANTE DA ESTERNO
OUTDOOR CALL POINT

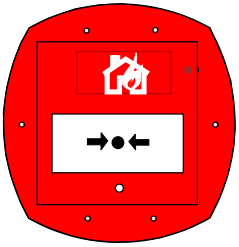

ISTISBL3FC421CP 1.0 250208

CE

ITALIANO

SPECIFICHE TECNICHE

Valore Identificativo:	130
Compatibilità:	usare solo con Centrali serie FC
Caratteristiche ambientali:	Applicazioni interne / esterne
Temperatura di funzionamento:	da -25 a +70 °C
Temperatura di stoccaggio:	da -40 a +80 °C
Umidità relativa:	fino a 95% (senza condensa)
Dimensioni (HxLxP):	135 x 135 x 30 mm
Corrente assorbita	
a Riposo:	0,46 mA
in Allarme:	4,5 mA
Grado IP:	IP66

Compatibilità Elettromagnetica

Il modulo FC421CP è conforme a quanto segue:

- famiglia di prodotto standard EN50130-4 rispetto alla Perturbazioni Dirette, Immunità Irradiata, Scarica Elettrostatica, Transitorie Rapide e Alta Energia Lenta;
- EN 61000-6-3 per le emissioni.

ENGLISH

TECHNICAL SPECIFICATION

Type Identification Value:	130
System Compatibility:	Use only with FC Fire Alarm Controllers
Environment:	Indoor / Outdoor applications
Operating Temperature:	-25 to +70 °C
Storage Temperature:	-40 to +80 °C
Operating Humidity:	Up to 95% non-condensing
Dimensions (HxWxD):	135 x 135 x 30 mm
Battery Requirements	
Standby:	0.46 mA
Alarm:	4.5 mA
IP Rating:	IP66

Electromagnetic Compatibility

The FC421CP complies with the following:

- product family standard EN50130-4 in respect of Conducted Disturbances, Radiated Immunity, Electrostatic Discharge, Fast Transients and Slow High Energy;
- EN61000-6-3 for emissions.

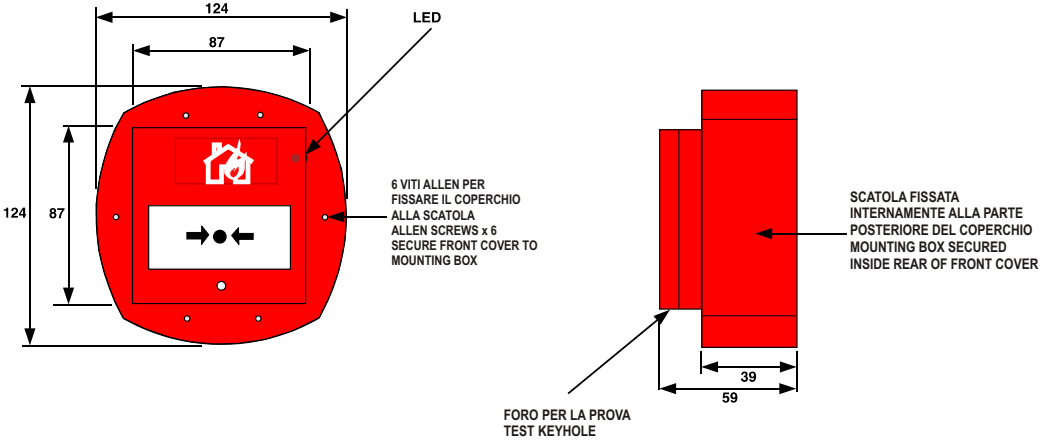

Pulsante da esterno FC421CP **FIG. 1** *FC421CP Outdoor Call Point*

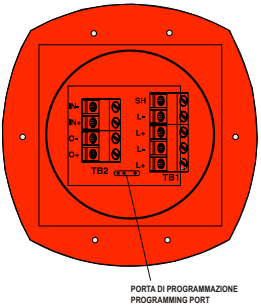

Vista interna del Pulsante da esterno FC421CP **FIG. 2** *FC421CP Outdoor Call Point Internal View*

INTRODUZIONE

Il pulsante FC421CP è progettato per monitorare e segnalare lo stato di un interruttore che è attivato dalla rottura di una piastrina di vetro. Il tipo di allarme generato dal pulsante è configurabile con la FireClass 500 Console. Il pulsante FC421CP può essere fissato ad un contenitore stagno standard per pulsanti a rottura vetro. Il FC421CP soddisfa i requisiti EN54 Pt.11.

PROGRAMMAZIONE

L'indirizzo di fabbrica del FC421CP è 255, questo deve essere impostato all'indirizzo di loop del dispositivo tramite lo strumento per la programmazione dei dispositivi indirizzabili FC490ST. L'indirizzo del FC421CP può essere programmato usando la porta di programmazione (vedere Fig. 2).

☞ *Nota: una volta programmato l'indirizzo, annotare la posizione del dispositivo e l'indirizzo, per segnarlo sul progetto dell'impianto.*

MONTAGGIO E COLLEGAMENTO

Montare il fondo nella posizione richiesta assicurandosi che sia orientato come mostrato in Fig. 3. I cavi devono essere selezionati in conformità con il documento di progettazione e nel rispetto delle norme applicabili. I collegamenti devono essere effettuati come mostrato in Fig. 4, rispettando la corretta polarità. Usare degli accoppiatori con cavi MICC (cavi in rame con isolamento minerale).

INTRODUCTION

FC421CP Call Points are designed to monitor and signal the condition of a switch contact that is operated by breaking a glass sheet. The type of alarm generated by the callpoint is configured in FC CONSYS.The FC421CP is fitted to a standard weatherproof break glass callpoint housing.The FC421CP call point meets the requirements of EN54 Pt. 11.

ADDRESS PROGRAMMING

The FC421CP has a default factory set address of 255, this must be set to the loop address of the device using FC490ST Loop Service Tool. The FC421CP is programmed with its address using the programming port (see Fig. 2).

☞ *Note:Once the address has been programmed take note of the device location and address number to include on site drawings.*

MOUNTING & CABLING

Mount the backbox in the required location ensuring the orientation is as shown in Fig. 3. Cables are to be selected in accordance with the system design document and the requirements of the applicable standards. Cabling should be connected as shown in Fig. 4, ensuring correct polarity. Couplers are to be used with MICC cable.

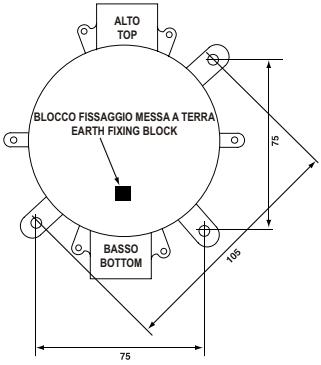

Dimensioni di fissaggio e orientamento del Pulsante da Esterno FC421CP **FIG. 3** *FC421CP Outdoor Call Point Fixing Dimensions & orientation*

NOTE PER IL COLLEGAMENTO

1) Sul FC421CP non ci sono regolazioni da effettuare (come interruttori o altro).
2) I collegamenti devono essere conformi alle norme applicabili.
3) Nessun conduttore deve essere collegato a terra. Per lo schema di collegamento tipico, vedere Fig.4.
4) Verificare la corretta polarità dei collegamenti prima di collegare il FC421CP al circuito a loop indirizzabile. Fissare il coperchio al fondo.

INFORMAZIONI PER L'ORDINE

FC421CP: Pulsante da Esterno.
Vetrini per il Pulsante (confezione da 5)

WIRING NOTES

1) There are no user-required settings(such as switches or headers) on the FC421CP.
2) All wiring must conform to the applicable standards.
3) All conductors to be free of earths. For typical wiring configuration, see Fig. 4.
4) Verify the correct polarity of the wiring before connecting the FC421CP to the addressable loop circuit. Fit front cover to backbox.

ORDERING INFORMATION

FC421CP: Outdoor Call Point.
Callpoint Glasses (pack of 5)

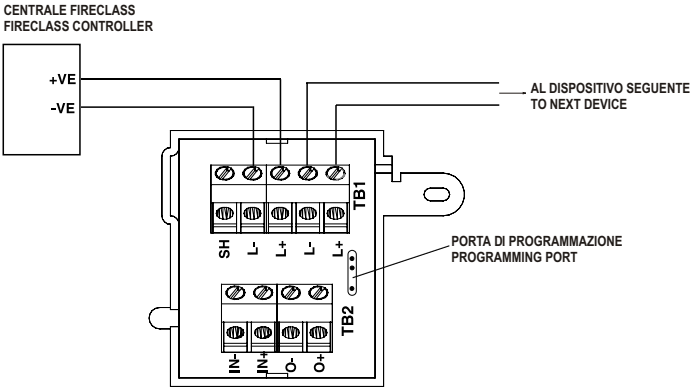

FIG.4

FC421CP Pulsante da esterno Schema di collegamento *FC421CP Outdoor Call Point Simplified Wiring Diagram*

INFORMAZIONI SUL RICICLAGGIO

Si consiglia ai clienti di smaltire i dispositivi usati (centrali, rilevatori, sirene, accessori elettronici, ecc.) nel rispetto dell'ambiente. Metodi potenziali comprendono il riutilizzo di parti o di prodotti interi e il riciclaggio di prodotti, componenti e/o materiali.

DIRETTIVA RIFIUTI DI APPARECCHIATURE ELETTRICHE ED ELETTRONICHE (RAEE - WEEE)

Nell'Unione Europea, questa etichetta indica che questo prodotto NON deve essere smaltito insieme ai rifiuti domestici. Deve essere depositato in un impianto adeguato che sia in grado di eseguire operazioni di recupero e riciclaggio.

Il costruttore si riserva il diritto di modificare le specifiche tecniche di questo prodotto senza preavviso.

RECYCLING INFORMATION

Customers are recommended to dispose of their used equipments (panels, detectors, sirens, and other devices) in an environmentally sound manner. Potential methods include reuse of parts or whole products and recycling of products, components, and/or materials.

WASTE ELECTRICAL AND ELECTRONIC EQUIPMENT (WEEE) DIRECTIVE

In the European Union, this label indicates that this product should NOT be disposed of with household waste. It should be deposited at an appropriate facility to enable recovery and recycling.

The manufacturer reserves the right to change the technical specifications of this product without prior notice.

FIȘĂ TEHNICĂ E-SI - Modul industrial de avertizare cu flash pentru incendiu

Nr Crt.	Specificațiile tehnice impuse prin Caietul de sarcini	Corespondența propunerii tehnice cu specificațiile tehnice impuse prin Caietul de sarcini	Producător
0	1	2	3
1.	**Parametrii tehnici şi funcţionali:** - Material protecției poli carbonat; - Material carcasa ABS plastic UV stabilizat - Tensiune nominala: funcție de sistemul ales; - Culoare: Roșu; - Temperatura de lucru: -20° C ... +50° C; - Putere acustica: minim 90 dB la 1m; - Semnal luminos: flash Roșu; - Lampa Flash High Bright LED; - Compatibil cu centrala de incendiu adresabila.	**Parametrii tehnici şi funcţionali:** - Material protecției poli carbonat; - Material carcasa ABS plastic UV stabilizat - Tensiune nominala: funcție de sistemul ales; - Culoare: Roșu; - Temperatura de lucru: -20° C ... +70° C; - Putere acustica: minim 90 dB la 1m; - Semnal luminos: flash Roșu; - Lampa Flash High Bright LED; - Compatibil cu centrala de incendiu adresabila.	**BENTEL SECURITY** **Cod: FC410LPAV**
2.	**Specificaţii de performanţă şi condiţii privind siguranta în exploatare:** - Auto protecție contra tăierii firelor si a sabotajului;	**Specificaţii de performanţă şi condiţii privind siguranta în exploatare:** - Auto protecție contra tăierii firelor si a sabotajului;	
3.	**Condiţii privind conformitatea cu standarde relevante:** - SR EN 54	**Condiţii privind conformitatea cu standarde relevante:** - SR EN 54	
4.	**Condiţii de garanţie şi postgaranţie:** - Producătorul va garanta calitatea şi buna funcţionare a produsului timp de 24 luni de la punerea în funcţiune sau de 36 luni de la data livrarii. - Produsul va corespunde normelor tehnice şi standardelor europene.	**Condiţii de garanţie şi postgaranţie:** - Producătorul va garanta calitatea şi buna funcţionare a produsului timp de 24 luni de la punerea în funcţiune sau de 36 luni de la data livrarii. - Produsul va corespunde normelor tehnice şi standardelor europene.	
5.	**Condiţii cu caracter tehnic:** - Nu vor fi luate în consideraţie decât ofertele însoţite de documentaţie completă pentru selecţie şi montaj în limba română. - Vor fi anexate: ▪ instrucţiuni de montaj (scheme de conectare, broşuri, cataloage); ▪ instrucţiuni de exploatare; ▪ buletine de încercări, verificări, probe; ▪ declaratie de conformitate.	**Condiţii cu caracter tehnic:** - Nu vor fi luate în consideraţie decât ofertele însoţite de documentaţie completă pentru selecţie şi montaj în limba română. - Vor fi anexate: ▪ instrucţiuni de montaj (scheme de conectare, broşuri, cataloage); ▪ instrucţiuni de exploatare; ▪ buletine de încercări, verificări, probe; ▪ declaratie de conformitate.	

ENGLISH

FC410LP SERIES OF LOOP POWERED SOUNDERS AND SOUNDER-BEACONS

INTRODUCTION

The FC410LP Series of Loop Powered Addressable Sounder/ Sounder-Beacons are designed to be driven from an FireClass control panel via the addressable loop. The FC410LP Series of sounders/sounder beacons consist:

FC410LPSYR	Sounder (indoor use) - red housing
FC410LPSYW	Sounder (indoor use) - white housing
FC410LPSY	Sounder IP65 (outdoor use) - red housing
FC410LPAVR	Sounder-Beacon (indoor use) - red housing
FC410LPAVW	Sounder-Beacon (indoor use) - white housing
FC410LPAV	Sounder-Beacon IP65 (outdoor use) - red housing

The sounder has two volume settings 'High' (103 dB ±3) or 'Low' (90 dB ±3). The beacon has two flash rates 'Slow Flash' (1/2 Hz) or 'Fast Flash' (1 Hz). The FC410LP devices are synchronised, but not synchronous with other FireClass sounders (FC430SB/FC410SNM) and beacons (FC430SAB). The first flash of the beacon is synchronised with the start of the tone. The FC410LP devices have a built in two port isolator.

TECHNICAL SPECIFICATION

Mechanical Characteristics

Dimensions:	See Fig.
Weight:	
Sounder Indoor:	228 g
Sounder Outdoor:	310 g
Sounder-Beacon Indoor:	218 g
Sounder-Beacon Outdoor:	300 g
Materials	
Indoor:	ABS FR
Outdoor:	ABS/PC FR
Colour:	White 21-0302
	Red 21-0301
Mounting Requirements:	50 mm or 60 mm Besa box or surface mount.

The indoor back box has to two drill positions (on the bottom) for gland holes. The outdoor back box has 3 drill positions (top and bottom) for gland holes. The indoor sounder/indoor sounder beacon body clips onto the backbox and can only be removed by the use of a special key.
The outdoor sounder /outdoor sounder beacon is secured to the backbox by four allan key screws.

Environmental Characteristics

Temperature:	Indoor	Outdoor
Operating:	-10°C to +55°C	-20°C to +70°C
Storage:	-25°C to +70°C	-25°C to +70°C
Humidity:	Up to 95% RH (non-condensing)	
Pressure:	Sounder output is quoted for atmospheric pressure of 1000mBar.	
Vibration:	Meets the requirements of EN 54-3.	
Corrosion:	passes the SO_2 corrosion test from EN 54-3.	
EMC:	The FC410LP devices comply with the following: Product family standard EN50130-4 in respect of Conducted Disturbances, Radiated Immunity, Electrostatic Discharge, Fast Transients and Slow High Energy.	
	EN61000-6-3 for Emissions.	
IP Rating:	Indoor	Outdoor
	IP21C (EN 60529)	IP65 (EN54-3 approved to IP33C)
Sound Performance:	high volume	low volume
SPL @ 1m:	103 dB ±3	90 dB ±3

Sound Dispersion	
Horizontal:	>90% over 90° (±45° from axis)
Pole Mounted:	>80% over 360° (from axis)
Light Performance:	
Flash Power/Light Output:	2 candela minimum on axis, spacial distribution 60° @ 1.5 cd
Flash Rate /s:	Fast Flash 1Hz or Slow Flash $^1/_2$Hz
Synchronisation:	30ms in 30 minutes maximum

Electrical Characteristics

Addressable Loop Voltage:	20 - 40 Vdc
DC Loop Loading	
Quiescent:	450 µA
Alarm:	
Sounder: Low Volume	3.4 mA
Sounder: High Volume	8.5 mA
Sounder + Beacon: Slow Flash + Low Volume	6.5 mA
Sounder + Beacon: Fast Flash + Low Volume	7.6 mA
Sounder + Beacon: Slow Flash + High Volume	11.1 mA
Sounder + Beacon: Fast Flash + High Volume	13 mA
Isolator	
Maximum Loop Voltage:	40 Vdc
Minimum Loop Voltage:	19 Vdc
Maximum Rated Continuous Current (Isolator Closed):	2 A
Maximum Rated Switching Current (s/c):	2 A
Maximum Leakage Current (Isolator Open):	6 mA into zone (10 mA into Isolator)
Maximum Series Impedance (Isolator Closed):	0.25 Ω
Isolator Switching Threshold (Isolator Closed to Open):	19V or below
Isolator Switching Threshold (Isolator Open to Closed):	3.3V from s/c

Sounder Tones

Table 1 details the tones available for selection in FireClass Console (Future use expandable to 32 tones).

Approved Tones

The following tones are approved by LPCB to the specifications as shown in Table 2.

Identification of parts

See Figs 1, 2, 3, 4, 5 and 6.

1	Programming Port	6	Indoor Sounder/Beacon
2	FireClass Control Panel	7	Outdoor Sounder/Beacon
3	801HL Remote Indicator	8	Drill position for glands
4	Indoor Sounder	9	Drill positions for glands top and bottom
5	Outdoor Sounder		

Address Programming

The FC410LP devices have a default factory set address of 255, this must be set to the loop address of the device using the FC490ST Service Tool. The sounder is programmed with the address prior to being installed by using the internal programming port (see Fig. 3).

☞ *This device use one address only on the loop.*

Device Mode	Name	Tone Description		
		Pattern	Frequency (Hz)	Rate
1	Duct Slow Whoop	Sweep	500 to 1200	500 Hz rising to 1200 Hz over 3.5 s silence 0.5 s repeat
2	Sweep veloce a 7 Hz	Sweep	800 to 970	0.1428 s ramp 7 Hz
3	BS 1 Hz Sweep	Sweep	800 to 970	1 Hz
4	2 Tone	Alternating	660/880	500 ms per tone
5	Temporal 4	Intermittent	880	500 ms on 500 ms off x 4 followed by 1.5 s silence
6	Temporal 3	Intermittent	880	500 ms on 500 ms off x 3 followed by 1.5 s silence
7	March Time Beep	Intermittent	880	500 ms on 500 ms off
8	Continuous 970	Continuous	970	Steady
9	Continuous 850	Continuous	850	Steady
10	DIN 1 Hz Sweep	Sweep	1200 to 500	1200 Hz falling to 500 Hz over 1 s and repeat
11	Banshee LF Buzzer	Sweep	800 to 950	120 Hz
12	3 Hz Banshee Fast Sweep	Sweep	800 to 950	3 Hz
13	9 Hz Banshee Fast Sweep	Sweep	800 to 950	9 Hz
14	Alternating	Alternating	554/440	554 Hz for 100 ms and 440 Hz for 400 ms
15	Yodalarm	Alternating	800/1000	250 ms for each frequency
16	Conventional Bell	Continuous	1450	Steady

Tab. 1 *Sounder Tones.*

	Continuous 850 Hz		Duct Slow Whoop 500 Hz to 1200 Hz		7 Hz Fast Sweep		Temporal 3 880 Hz	
Angle	40 V	20 V	40 V	20 V	40 V	20 V	40 V	20 V
15°	84.0	83.0	85.4	84.4	84.2	83.4	81.2	79.7
45°	93.9	92.5	95.2	94.2	94.3	93.7	92.8	91.0
75°	96.3	95.1	97.7	96.3	97.3	96.0	95.0	94.3
105°	62.2	94.8	97.0	95.8	96.7	95.5	94.4	93.6
135°	93.1	92.1	94.0	93.3	93.9	93.2	92.0	90.9
165°	82.0	81.8	84.9	84.1	84.6	83.8	81.2	80.9

Tab. 2 *Operational Performance – Maximum Volume dB(A).*

FC410LP Configuration

Sounder tone (Device Mode), sounder volume output (Sensitivity) and beacon flash rate (Device Mode) are configured in FireClass Console.

Fault Monitoring

Both the sounder and beacon are monitored. For further details on the application of this function, refer to the Technical Publications of the relevant Control and Indicating equipment.

Isolator Operation

The built-in isolator serves as a protection device against short circuits. It operates by isolating the section of line containing the short circuit from devices on the line and from the rest of the line (refer to Fig. 4). Optimum operation requires the line to be wired as a loop, so that a section of line with a short circuit can be isolated between a pair of isolator devices (including FC410LP devices).

In order to enable the isolator's use in a looped circuit, it is capable of passing current in both directions (Loop IN to Loop OUT or Loop OUT to Loop IN). In the event of a line short circuit, the line isolator continues to power its associated FC410LP Sounder or Sounder-Beacon, providing that either Loop IN or Loop OUT remains intact. When a short circuit develops, the adjacent isolator devices will isolate both sides of the loop from the faulty device/cable.

The operation of the FireClass Loop driver means that there are effectively 2 operational modes for the built-in isolator.

1) When the loop is first powered, if a section of the line appears as a low impedance (with an equivalent resistance of <400Ω), the isolator will restrict the power to that section of line until the fault is cleared.

2) If a short circuit is introduced onto the line when the loop is already powered up, in most instances the controller's internal protection will switch in before the line isolator. The voltage is then removed from the line by the controller, on restoration, the isolator devices will isolate the low impedance section of the line.

CABLING

Cables are to be selected in accordance with the system design document and the requirements of the applicable standards. Cabling should be connected as shown in Fig. 5, ensuring correct polarity.

Each terminal connection will accept wire size up to 2.5mm^2.

☞ *The section is calculated based on the characteristics of the cable and the load.*

☞ *Suitable glands must be used with the outdoor device to keep the IP65 rating.*

ORDERING INFORMATION

FC410LPSYR	Sounder (indoor use) – red housing
FC410LPSYW	Sounder (indoor use) – white housing
FC410LPSY	Sounder IP65 (outdoor use) – red housing
FC410LPAVR	Sounder-Beacon (indoor use) – red housing
FC410LPAVW	Sounder-Beacon (indoor use) – white housing
FC410LPAV	Sounder-Beacon IP65 (outdoor) – red housing

RECYCLING INFORMATION

Customers are recommended to dispose of their used equipments (panels, detectors, sirens, and other devices) in an environmentally sound manner. Potential methods include reuse of parts or whole products and recycling of products, components, and/or materials.

WASTE ELECTRICAL AND ELECTRONIC EQUIPMENT (WEEE) DIRECTIVE

In the European Union, this label indicates that this product should NOT be disposed of with household waste. It should be deposited at an appropriate facility to enable recovery and recycling.

The manufacturer reserves the right to change the technical specifications of this product without prior notice.

Fig. 1 *Sirenenmodul FC410LPSY.*
Sounder FC410LPSY.
Sirena FC410LPSY.

Fig. 2 *Sirenenmodul mit Blinklicht FC410LPAV, IP65.*
Sounder with Beacon FC410LPAV, IP65.
Sirena con lampeggiatore FC410LPAV, IP65.

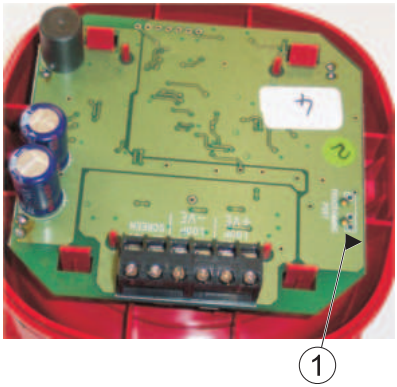

Fig. 3 *Programmieranschluss.*
FC410LP Series Programming Port.
Porta di Programmazione della serie FC410LP.

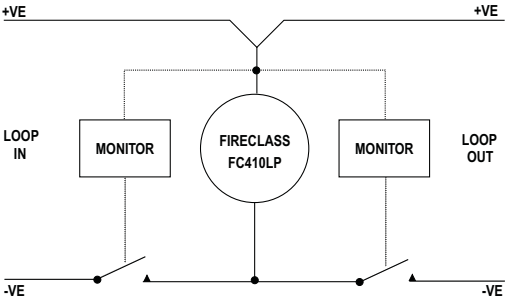

Fig. 4 *Simplified Isolator Diagram.*
Diagramma semplificato dell'Isolatore.

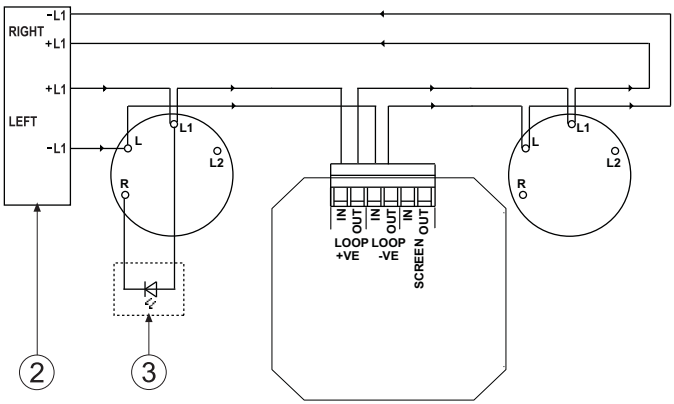

Fig. 5 *Anschlussschema.*
Simplified Wiring Diagram.
Diagramma semplificato dei collegamenti.

CE

0832

Thorn Security Ltd
Dunhams Lane
Letchworth SG6 1BE
UK

07

0832-CPD-0571 EN 54-3:2001 + A1:2002 EN 54-17:2005 Addressable loop powered Type A sounder for use in fire detection and alarm systems for buildings FC410LPSYR FC410LPSYW	**0832-CPD-0572** EN 54-3:2001 + A1:2002 EN 54-17:2005 Addressable loop powered Type B sounder for use in fire detection and alarm systems for buildings FC410LPSY
0832-CPD-0573 EN 54-3:2001 + A1:2002 EN 54-17:2005 Addressable loop powered Type A sounder beacon for use in fire detection and alarm systems for buildings FC410LPAVR FC410LPAVW	**0832-CPD-0574** EN 54-3:2001 + A1:2002 EN 54-17:2005 Addressable loop powered Type B sounder beacon for use in fire detection and alarm systems for buildings FC410LPAV
Installation Instructions: 120.515.052	

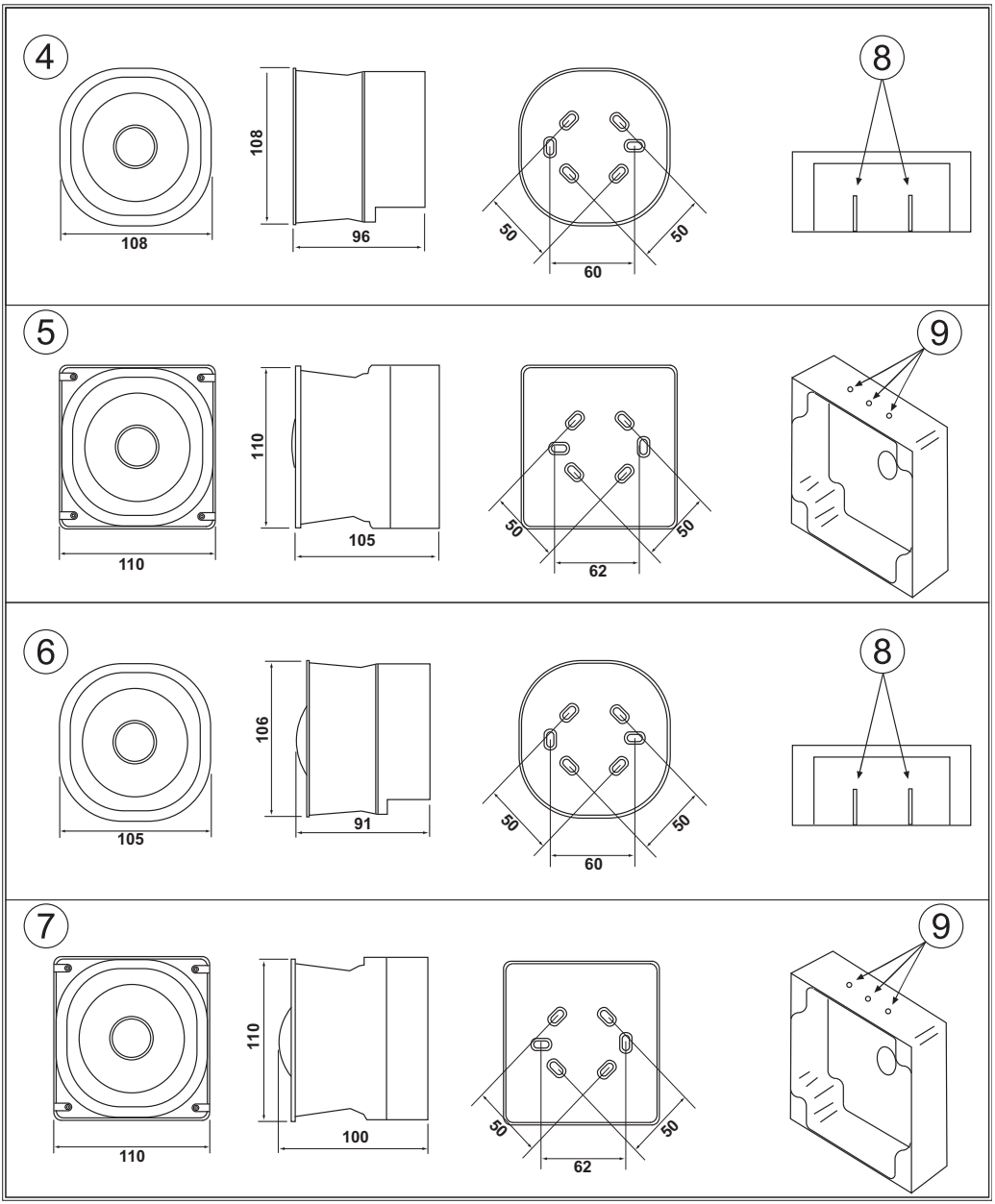

Fig. 6 *Außen- und Befestigungsmaße.*
Sounder and Sounder-Beacon - Overall and Fixing Dimensions.
Sirena e Sirena-Lampeggiatore - Dimensioni Generali e per il Fissaggio.

Via Gabbiano 22, Z. Ind. S. Scolastica
64013 Corropoli (TE), Italy

Hillcrest Business Park Cinderbank Dudley West Midlands
DY2 9AP United Kingdom

www.fireclass.co.uk
FireclassSales@tycoint.com

FISA TEHNICA E-TA - Transponder adresabil

Nr Crt.	Specificațiile tehnice impuse prin Caietul de sarcini	Corespondența propunerii tehnice cu specificațiile tehnice impuse prin Caietul de sarcini	Producător
0	1	2	3
1.	**Parametrii tehnici si funcționali:** - Material carcasa: poli carbonat; - Tensiune alimentare: 12-40 Vdc; - Număr intrări :minim 4 buc.; - Număr ieșiri : minim 2 buc. (contact releu); - Contact releu: 30Vcc/1A; - Umiditate: Max 95% fără condensare; - Temperatura de lucru: -10° C ... +50° C; - Grad de protecție: minim IP 30; - Sistem adresabil; - Compatibil cu centrala de detecție incendiu/ centrala de efracție; - Conexiune electrica: terminale cu șurub;	**Parametrii tehnici si funcționali:** - Material carcasa: poli carbonat; - Tensiune alimentare: 12-40 Vdc; - Număr intrări: 4 buc.; - Număr ieșiri : 4 buc. (contact releu); - Contact releu: 30Vcc/1A; - Umiditate: Max 95% fără condensare; - Temperatura de lucru: -20° C ... +70° C; - Grad de protecție: IP 40; - Sistem adresabil; - Compatibil cu centrala de detecție incendiu/ centrala de efracție; - Conexiune electrica: terminale cu șurub;	**BENTEL SECURITY**
2.	**Specificaţii de performanţă şi condiţii privind siguranta în exploatare:** - Utilizat pentru preluarea in centrala de detecție incendiu/centrala de efracție a detectoarelor, declanșatoarelor manuale convenționale din mediul Ex - Toate transponderele se vor manta într-o cutie metalica cu grad de protecție minim IP54	**Specificaţii de performanţă şi condiţii privind siguranta în exploatare:** - Utilizat pentru preluarea in centrala de detecție incendiu/centrala de efracție a detectoarelor, declanșatoarelor manuale convenționale din mediul Ex - Toate transponderele se vor manta într-o cutie metalica cu grad de protecție minim IP54.	
3.	**Condiţii privind conformitatea cu standarde relevante:** - Conform standardelor EN54-17 si EN54-18	**Condiţii privind conformitatea cu standarde relevante:** - Conform standardelor EN54-17 si EN54-18	
4.	**Condiţii de garanţie şi postgaranţie:** - Producătorul va garanta calitatea şi buna funcţionare a produsului timp de 24 luni de la punerea în funcţiune sau de 36 luni de la data livrarii. - Produsul va corespunde normelor tehnice şi standardelor europene.	**Condiţii de garanţie şi postgaranţie:** - Producătorul garantează calitatea şi buna funcţionare a produsului timp de 24 luni de la punerea în funcţiune sau de 36 luni de la data livrarii. - Produsul va corespunde normelor tehnice şi standardelor europene.	
5.	**Condiţii cu caracter tehnic:** - Nu vor fi luate în consideraţie decât ofertele însoţite de documentaţie completă pentru selecţie şi montaj în limba română. - Vor fi anexate: ▪ instrucţiuni de montaj (scheme de conectare, broşuri, cataloage); ▪ instrucţiuni de exploatare; ▪ buletine de încercări, verificări, probe; ▪ declaratie de conformitate.	**Condiţii cu caracter tehnic:** - Nu vor fi luate în consideraţie decât ofertele însoţite de documentaţie completă pentru selecţie şi montaj în limba română. - Vor fi anexate: ▪ instrucţiuni de montaj (scheme de conectare, broşuri, cataloage); ▪ instrucţiuni de exploatare; ▪ buletine de încercări, verificări, probe; ▪ declaratie de conformitate.	

FC410QIO Quad Input/Output Module

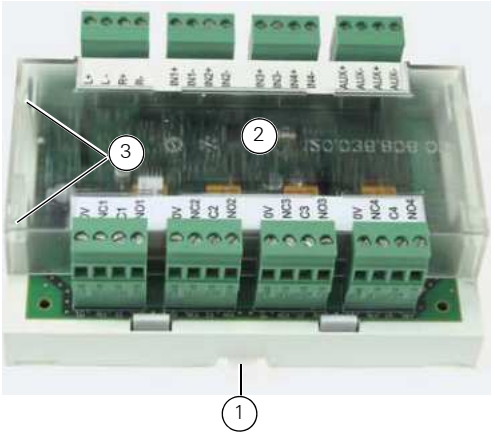

Fig. 1: FC410QIO Quad Input/ Output Module
1– Release clip
2– Clear cover
3– Cover retaining tabs

Introduction

Figure 1 shows the FC410QIO Quad Input/Output Module, part number 555.800.771.

The module provides four monitored inputs and four potential free relay changeover outputs.

The outputs are monitored with parallel contacts of the relays. The outputs can be connected to an Auxiliary Voltage source and its voltage can be monitored.

Additionally, all the outputs can be connected to the HVR800, for switching high power galvanic isolated loads. For more details refer to the HVR800 documentation.

The module has an integral loop isolator. If this activates a yellow LED illuminates. The activation remains in place until the short is removed.

The digital input monitoring and isolator functions are both configurable.

Installation Notes

The module is DIN rail mounted. This will typically be within a suitable enclosure, providing protection against mechanical shocks, electrostatic discharge and support for the cabling.

A suitable enclosure can be ordered under part number 557.201.410. This is rated to IP66, and is supplied complete with a mounting plate (Item 3 in Figure 2) and a piece of DIN rail.

Snap the FC410QIO module onto the DIN rail with the release clip protruding. The complete assembly is as shown in Figure 2.

For using another housing, ensure that it has a minimum weight of 0.8 kg with an IP rating of 20 or higher.

Refer to the section “Technical Specifications” to determine the required module configuration. Then connect the wiring and set the jumpers as appropriate.

Set an appropriate loop address for the module, using a FC490ST service tool. Use the module’s programming port, shown as item 6 in Figure 3.

To remove the clear plastic cover, release each of the four locking tabs in turn (see item 3 in Figure 1). Use a screwdriver to press the tab inwards, while pulling upwards on the cover.

Select all cables in accordance with local standards, such as BS5839..

Check all conductors are free of earths.

If you need to remove the module from the rail, pull the DIN rail release tab (item 2 in Figure 2).

Site Drawings

Once the address has been programmed, take note of the device location and address number, to include on site drawings.

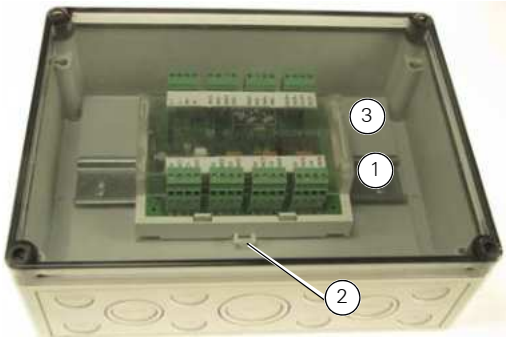

Fig. 2: FC410QIO Module fitted in the optional IP66 rated enclosure
1– DIN rail
2– DIN rail release clip
3– Mounting plate

Technical Specifications

Table 1 shows the technical specifications.

632 / 741

Parameter	Value
Type Identification Value	195
System Compatibility	Use only with FireClass Fire Alarm Controllers
Environment	Indoor application only
Operating Temperature	-25 to +70 °C
Storage Temperature	-40 to +80 °C
Operating Humidity	Up to 95 % non-condensing
Dimensions (HWD)	134 x 103 x 49 mm (including plastic housing and terminal connector)
Mounting Requirements	DIN rail/backbox surface mount

Table 1: Technical Specifications

Parameter	Value
Battery Requirements	Standby current 1.1 mA Alarm current 5.9 mA
Wire Size	Min. 0.5 mm^2, max. 2.5 mm^2
Addressable Device Conditions	■ Active ■ Normal ■ Auxiliary Voltage Fault ■ Relay Stuck Fault ■ Open Circuit Fault ■ Short Circuit Fault ■ Isolator Fault ■ Device No Response
Device Mode for each input point (Selectable by panel configuration software)	■ Style B (Normally Open) Alarm on Short ■ Style C (Normally Open) Fault on Short (Default Setting) ■ Style C (Normally Closed) Fault on Short ■ Style C (Normally Open) Fault on Short EN54-13 ■ Style C (Normally Closed) Fault on Short EN54-13
Device Mode for each single output point (Selectable by panel configuration software)	■ Door Control ■ Alarm Control

Table 1: Technical Specifications (cont.)

CPR Information

CE
0786

Tyco Fire & Security GmbH,
Victor von Bruns-Strasse 21,
8212 Neuhausen am Rheinfall,
Switzerland
15
DoP-2015-4090

EN54-17 and EN54-18
Input-/Output device with Short-Circuit Isolator for use in fire detection and alarm systems in buildings
FC410QIO

Essential Characteristics
EN54-17 and EN54-18
Performance under fire conditions: Pass
Operational reliability: Pass
Durability of operational reliability; temperature resistance: Pass
Durability of operational reliability; vibration resistance: Pass
Durability of operational reliability; humidity resistance: Pass
Durability of operational reliability; corrosion resistance: Pass
Durability of operational reliability; electrical stability: Pass
EN54-18
Response delay (response time): Pass

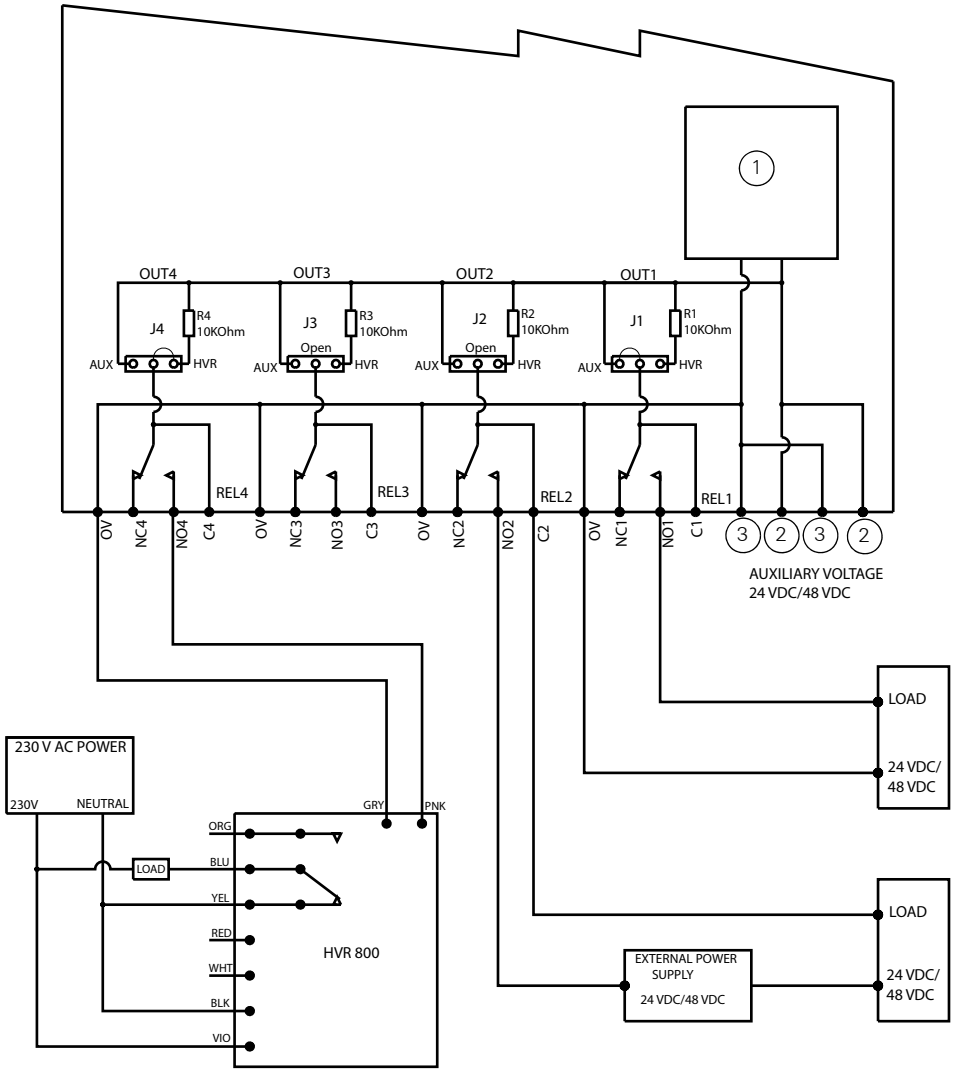

Fig. 4: Terminals
1– External Voltage and Wire Monitor
2– Positive External Voltage
3– Negative External Voltage
Jumpers J1, J2, J3 and J4 must be set according to Table 3 on page 4

633 / 741

Parameter	Value
Electromagnetic Compatibility	■ EN50130-4 for immunity ■ EN61000-6-3 for emissions

Table 1: Technical Specifications (cont.)

Features

Input Circuit

- EOL terminator: nominal 3.3 Kilo Ohms
- Alarm resistor: nominal 0.68 Kilo Ohms

Open and Short circuit detection can be set to:

- Maximum cable resistance: 50 Ohms
- Maximum cable length: 200 m (standard cable J-Y(ST)Y nx2x0.8)

Output Circuit (Relay Contact)

- Nominal switching capacity 2 A 30VDC (resistive load)
- Max. switching power 60 W, 125 VA (resistive load)

WARNING
Danger from Electric Shock
Do not use the relay contacts to switch the mains voltage.

Auxiliary Voltage Input

- Auxiliary voltage 24 VDC max 55 VDC
  (Threshold voltage for auxiliary voltage fault indication: 18 VDC ± 1 VDC)
- Auxiliary voltage 48 VDC max 55 VDC
  (Threshold voltage for auxiliary voltage fault indication: 36 VDC ± 2 VDC)

Terminals

Table 2 shows the terminal information.

Description	Marking	Comment
FireClass Loop Interface	L+	Loop+ to left
	L-	Loop- to left
	R+	Loop+ to right
	R-	Loop- to right
Monitored Input 1 Monitored Input 2 Monitored Input 3 Monitored Input 4	IN1+ IN2+ IN3+ IN4+	
	IN1- IN2- IN3- IN4-	
Relay Output 1 Relay Output 2 Relay Output 3 Relay Output 4	NC1 NC2 NC3 NC4	Normally closed contact
	C1 C2 C3 C4	Common contact
	NO1 NO2 NO3 NO4	Normally open contact
	OV	Connected to AUX -

Table 2: Terminals

Description	Marking	Comment
Auxiliary Voltage Input	AUX+	Auxiliary Voltage input + (both in parallel)
	AUX-	Auxiliary Voltage input - (both in parallel)
	AUX+	Auxiliary Voltage input + (both in parallel)
	AUX-	Auxiliary Voltage input - (both in parallel)

Table 2: Terminals (cont.)

634 / 741

Jumpers

Table 3 shows the jumper information.

Jumper	Description
ISO. ON / ISO. OFF	Isolator Activated/ Deactivated Connect either link depending on whether or not the Isolator Function is required.
Auxiliary Voltage	2-3 24 VDC, 1-2 48 VDC

Table 3: Jumpers

Jumper	Description
OUT1 OUT2 OUT3 OUT4	HVR 1-2= HVR compatible, AUX 2-3= C1/C2/ C3/C4 connected to AUX +, not fitted = general voltage free relay output. The HVR option is not permissible if a 48 VDC Auxiliary Voltage is connected.

Table 3: Jumpers (cont.)

Indicators

Table 4 shows the Indicator information.

Indicator	Description
ISO.	ON = Isolator active
OUT1	ON = Relay Output 1 is set
OUT2	ON = Relay Output 2 is set
OUT3	ON = Relay Output 3 is set
OUT4	ON = Relay Output 4 is set
POLL	■ Flash = Poll of module ■ Steady ON = At least one relay is activated

Table 4: Indicators
The values for the indicators OUT1, 2, 3, 4 and POLL depends on the software configuration.

Wiring Diagrams

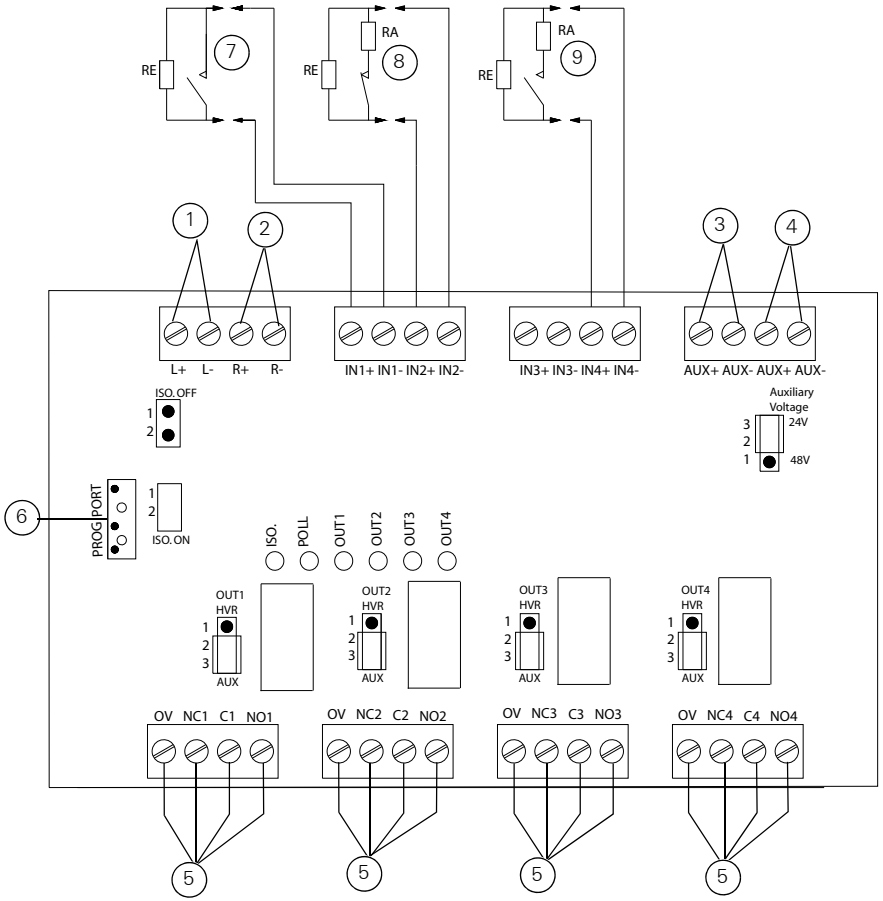

Fig. 3: Terminal Arrangement
1– From FireClass Control Panel or Previous Loop Device
2– To the Next Loop Device
3– From FireClass Control Panel or External Power Supply
4– To Next FireClass Device
5– Four Off Configurable Voltage Free Relay Outputs or HVR Drivers or 24 VDC/48 VDC Auxiliary Voltage Supply
6– Address Programming Port
7– Represents Style B- Alarm on Short
8– Represents Style C- Fault on Short (Normally Closed)
9– Represents Style C- Fault on Short (Normally Open)
RE= EOL Resistor, 3,3kOhm, RA= Alarm Resistor, 680 Ohm

FISA TEHNICA E-CE - Centrala alarmă antiefractie

Nr Crt.	Specificațiile tehnice impuse prin Caietul de sarcini	Corespondența propunerii tehnice cu specificațiile tehnice impuse prin Caietul de sarcini	Producător
0	1	2	3
1.	**Parametrii tehnici şi funcţionali:** - Centrala alarma antiefracție convențional-adresabilă cu facilități pentru control acces (compusa din cel puțin urmatoarele: placa de baza, carcasa, sursa de alimentare, acumulatori, tastatura sau cititor cu tastatura, modul I/O BUS, modul de comunicație cu dispeceratul de Securitate al Beneficiarului, modul GSM/GPRS, antena GSM, etc.); - Material carcasa: metalica/policarbonat - Alimentare principala: 230 Vca - Sursa back-up: acumulatori calculați conform proiect; - Sursa de alimentare in comutație; - intrări de zona de placa: min. 8, extensibile; - Memorie evenimente: min. 250 evenimente; - Coduri utilizator: multiple, din care: 1 cod principal (master) 1 cod de mentenanță; - Ceas de timp real; - Iesire pentru încărcare acumulator back-up; - Iesire pentru comanda sirena; - Iesiri supervizate la defect sau sabotaj; - Tastatura operare sistem - montaj in exterior; - Modul control acces pentru 2 cititoare de proximitate - Comunicație seriala; - Modul comunicație GSM/GPRS - Modul comunicație GSM/GPRS cu unul din protocoalele de comunicație ID sau SIA 9 compatibil cu dispeceratul de tip SurGard SG System Ill a Transgaz; - La montare centrala va trebui sa comunice cu dispeceratul Transgaz; - Cartela SIM: va fi achiziționată de Beneficiar - Buton de reset (revenire la valorile inițiale si restart) - Ceas in timp real cu baterie de backup	**Parametrii tehnici şi funcţionali:** - Centrala alarma antiefracție convențional-adresabilă cu facilități pentru control acces (compusa din cel puțin urmatoarele: placa de baza, carcasa, sursa de alimentare, acumulatori, tastatura sau cititor cu tastatura, modul I/O BUS, modul de comunicație cu dispeceratul de Securitate al Beneficiarului, modul GSM/GPRS, antena GSM, etc.); - Material carcasa: metalica/policarbonat - Alimentare principala: 230 Vca - Sursa back-up: acumulatori calculați conform proiect; - Sursa de alimentare in comutație; - intrări de zona de placa: 8, extensibile; - Memorie evenimente: 500 evenimente; - Coduri utilizator: multiple, din care: 1 cod principal (master) 1 cod de mentenanță; - Ceas de timp real; - Iesire pentru încărcare acumulator back-up; - Iesire pentru comanda sirena; - Iesiri supervizate la defect sau sabotaj; - Tastatura operare sistem - montaj in exterior; - Modul control acces pentru 2 cititoare de proximitate - Comunicație seriala; - Modul comunicație GSM/GPRS - Modul comunicație GSM/GPRS cu unul din protocoalele de comunicație ID și SIA 9 compatibil cu dispeceratul de tip SurGard SG System Ill a Transgaz; - La montare centrala va trebui sa comunice cu dispeceratul Transgaz; - Cartela SIM: va fi achiziționată de Beneficiar - Buton de reset (revenire la valorile inițiale si restart) - Ceas in timp real cu baterie de backup	**BENTEL SECURITY** **Cod: HS3032**
2.	**Specificaţii de performanţă şi condiţii privind siguranta în exploatare:** - Programare si diagnoza locala si de la distanta; - Stocare locala rapoarte;	**Specificaţii de performanţă şi condiţii privind siguranta în exploatare:** - Programare si diagnoza locala si de la distanta; - Stocare locala rapoarte;	

	- Eticheta de timp ataşată, in cazul evenimentelor; - Ceas intern; - Autotestare si autodiagnosticare: indicare locala pe display si transmitere la distanta a stării sistemului; - Va transmite către PLC starea de alarmă şi de defect; - Va prelua semnalele de alarmă de la centrala de detectie incendiu şi le va transmite către dispecerat.	- Eticheta de timp ataşată, in cazul evenimentelor; - Ceas intern; - Autotestare si autodiagnosticare: indicare locala pe display si transmitere la distanta a stării sistemului; - Va transmite către PLC starea de alarmă şi de defect; - Va prelua semnalele de alarmă de la centrala de detectie incendiu şi le va transmite către dispecerat.	
3.	**Condiţii privind conformitatea cu standarde relevante:** - EN 50131	**Condiţii privind conformitatea cu standarde relevante:** - EN 50131	
4.	**Condiţii de garanţie şi postgaranţie:** - Producătorul va garanta calitatea şi buna funcţionare a produsului timp de 24 luni de la punerea în funcţiune sau de 36 luni de la data livrarii. - Produsul va corespunde normelor tehnice şi standardelor europene.	**Condiţii de garanţie şi postgaranţie:** - Producătorul garantează calitatea şi buna funcţionare a produsului timp de 24 luni de la punerea în funcţiune sau de 36 luni de la data livrarii. - Produsul corespunde normelor tehnice şi standardelor europene.	
5.	**Condiţii cu caracter tehnic:** - Nu vor fi luate în consideraţie decât ofertele însoţite de documentaţie completă pentru selecţie şi montaj în limba română. - Vor fi anexate: • instrucţiuni de montaj (scheme de conectare, broşuri, cataloage); • instrucţiuni de exploatare; • buletine de încercări, verificări, probe; • declaratie de conformitate.	**Condiţii cu caracter tehnic:** - Nu vor fi luate în consideraţie decât ofertele însoţite de documentaţie completă pentru selecţie şi montaj în limba română. - Vor fi anexate: • instrucţiuni de montaj (scheme de conectare, broşuri, cataloage); • instrucţiuni de exploatare; • buletine de încercări, verificări, probe; • declaratie de conformitate.	

tyco | DSC

Now with
248 zones
32 partitions

PowerSeries Pro Commercial Security System

Integration Capabilities

Easy Installation

Flexibility

Growth Opportunities

Johnson Controls

Your Comprehensive Business Security Solution

Tyco I DSC is taking commercial security where it's never been before. PowerSeries Pro is a long-range, commercial-grade system with industry-leading hybrid intrusion technology, flexible integration possibilities and the dynamic power to protect enterprises of any size. It's all the power of wires, without all the wires.

The entire system is protected by 128-bit AES encryption on wired BUS, PowerG wireless devices, and IP and cellular communication. Its best-in-class main panel power capabilities support up to 248 zones and 32 partitions, to enable intrusion solutions for large projects, prepared for future needs.

This robust system is an ideal solution for mid to large installation projects, such as education, manufacturing, warehousing, office buildings, retail and energy sector facilities.

FIRST CLASS HYBRID COMMERCIAL SECURITY SYSTEM

Improved security, easy on the bottom line

Growth Opportunities

PowerSeries Pro provides scalable commercial installations designed to accommodate additional buildings and areas

And add additional functions, such as temperature monitoring and predictive analytics

Easy Installation

No drills. No wires. No repeaters.

Thanks to long-range PowerG technology, 128-bit AES encrypted wireless communication

Flexibility

Frequency Hopping Spread Spectrum technology repeatedly switches frequencies to minimize interference of radio signals and prevent interception and obstruction during transmission

Integration Capabilities

Supports multiple third-party integrations, Kantech access control, Building Management Software (BMS), and Alarm.com

Compatible with a long list of additional security products, the system meshes them together seamlessly

PowerG Wireless Solutions for Commercial Projects

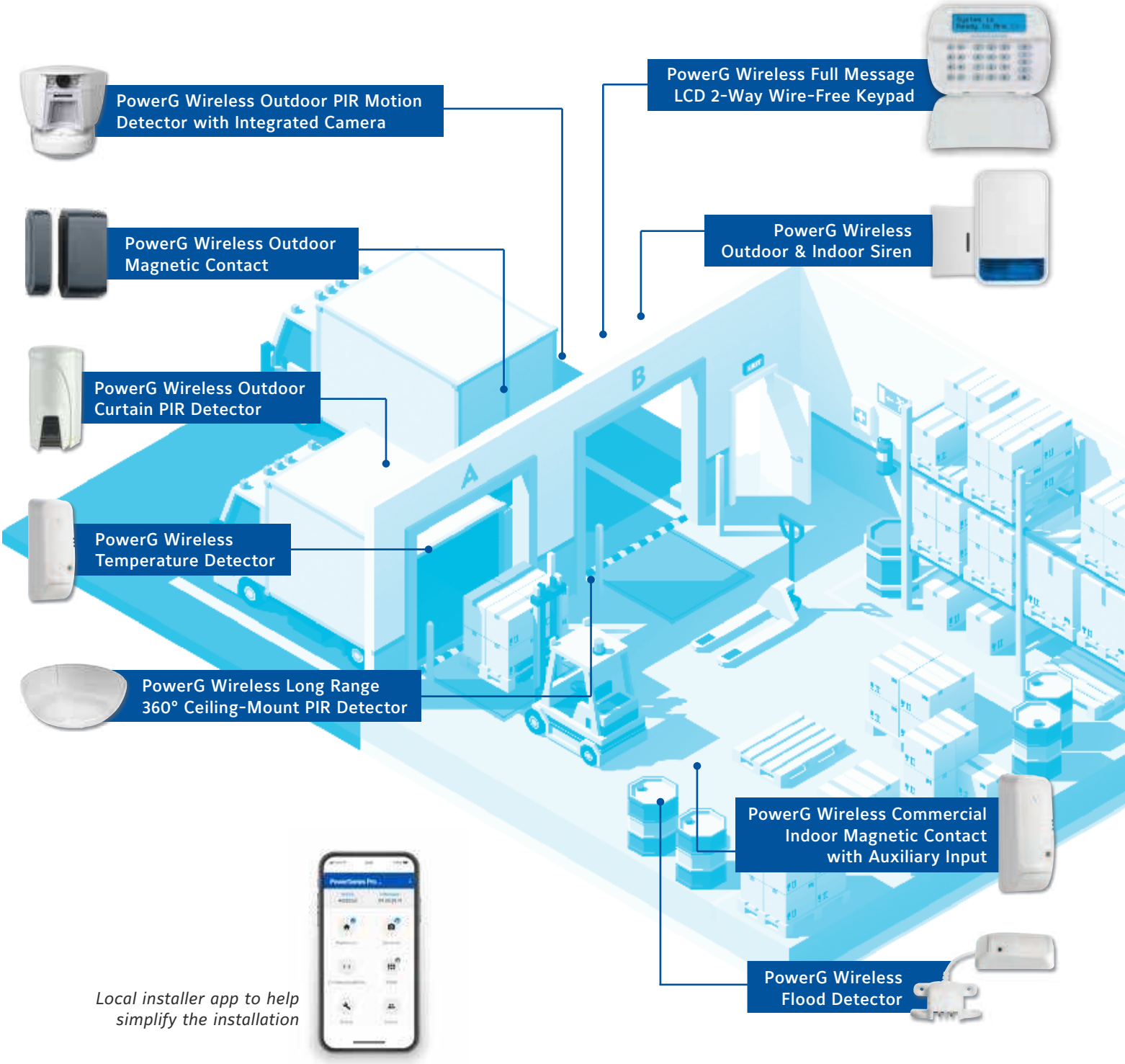

Local installer app to help simplify the installation

Best-in-Class Security

- Secures mid-large commercial installations without the need for wires on sensors or keypads
- PowerG wireless devices are encrypted with leading edge, proven technology, featuring two-way 128-bit AES encryption. All the benefits of traditional wired security, without the hassles of wires.
- Wired BUS modules, including wired keypads, zone expanders and power supplies, as well as central monitoring station alarm communications featuring 128-bit AES encryption
- Prevents tampering with enhanced triple end-of-line resistors and PowerG anti-masking technology

Future-Ready Scalable Value

- 2A on-board Power sustains any initial installation needs, and is ready for future additions, ensuring long-lasting value
- Created with future growth in mind, PowerSeries Pro supports an ever-expanding list of compatible security products that can be easily added to support each customer's changing needs
- Additional modular cellular communicator can be added in the future, based on customers' needs
- Largest selection of encrypted wireless devices and accessories available in the market, including options for outdoor security

FEATURING PowerG

Industry's leading-edge intrusion technology

Military-grade two-way, 128-bit AES encryption protects against powerful analysis tools and digital attacks

Full two-way synchronized TDMA communication to ensure there are no lost alarm messages

Multi-channel, Frequency Hopping Spread Spectrum (FHSS) repeatedly switches frequencies to minimize interference of radio signals and prevent interception and obstruction during transmission

ULC Wireless Commercial Burglary level 1, 2 & 3 Approval (ULC-5304-16)*

Devices dynamically optimize their route to the control panel to avoid RF interference and to extend battery life up to 8 years**

High transmission ranges allow for devices to reliably communicate within up to 2km/1.24 miles line-of-sight, therefore reducing the cost of installing additional repeaters to service larger premises

Advanced, time-saving toolset: on-site and remote diagnostics, remote real-time testing, support for advanced applications & mobile control to dramatically reduce maintenance costs

*Only applicable in Canada
**Battery life depends on device placement and system use

Panel Comparison & Compatibility

ON BOARD	HS3032	HS3128	HS3248
On board Zones	8	8	8
Maximum Zones	32	128	248
Maximum Partitions	4	8	32
Maximum Wireless Zones	32	128	128
Users	72	1000	1000
On Board PGM	4	4	4
Maximum Low Current PGM's (HSM2208)	32	128	128
Maximum High Current PGM's (HSM2204)	4	16	16
Maximum Relay PGM's (HSM3204CX)	4	32	32
Event Buffer	500	1000	1000
Priority Buffer	2000	2000	2000
Arming Buffer	100	100	100
Cellular Plug-in Interface	1	1	1
On-Board Ethernet Connection 10MB/100MB/1GB	1	1	1
USB Connectors	2	2	2

NAME	PART NUMBER
8 Zone Expander with removable terminal blocks	HSM3408
2 Amp Power Supply BUS Extender with 4 relays outputs	HSM3204CX
3 Amp Supervised Power Supply	HSM3350
18 V DC Power Adapter for main panel and power supplies	HS65WPSNA
Wi-Fi Adapter for installer programming	HSM3WIFI
LTE Cellular Communicator	LE9080
Alarm.Com Dual Path Communciator	TL880LEAT N (AT&T US or Canada) TL880LETL N (Telus Canada only) TL880LTVZ N (Verizon US only)
LCD Keypad with Prox and/or PowerG Transceiver	HS2LCD(RF)PRO9
TouchScreen Keypad with Prox. Tag Support (available in black or white)	HS2TCHPRO(BLK)
8 Zone Expander	HSM2108
1 Amp Power Supply with 4 program-mable outputs	HSM2204
8 low current power programmable output expander	HSM2208
1 Amp Supervised Power Supply	HSM2300
Two-Way Audio module	HSM2955
PowerG Transceiver	HSM2HOST9
Compatible with all PowerG devices	

SPECIFICATIONS
External Power Supply HS65WPSNA(5) ..... 100 V-240 VAC 50/60 HZ Max 1.7A. Output 18 VDC 3.6A Max.
Note: Power supply may be mounted outside the cabinet. Use the following guide to determine maximum distance for the selected wire gauge:
DISTANCE GAUGE: 6.5ft/2 meters ..... 22AWG 10ft/3 meters..... 20AWG 13ft/4 meters..... 18AWG
Current Draw (Panel)..... 85mA (Nominal)
Auxiliary Output ..... 13.75 +/- 5% Vdc/2 A
Bell Output ..... 13.75 +/- 5% Vdc/700 mA (2.0 A Current Limited)
Operating Environment..... 32° to 120° F (0° to 49° C)
Relative Humidity 93%
Board dimensions : 191 mm x 97 mm
Note: Please refer to www.dsc.com for the most current approval listings.

Specification

System Overview

HS3032/HS3128/HS3248 MAIN PANEL

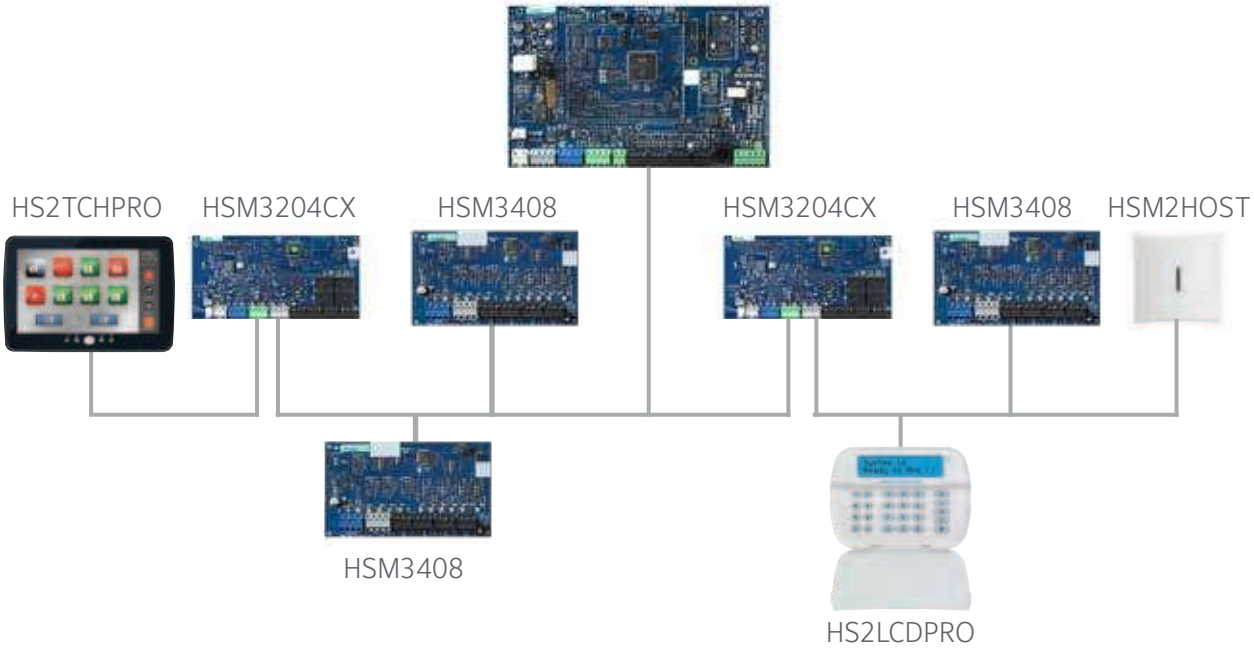

Key Features

- Hardwired zone expansion allows for easy expansion and programmable outputs
- All modules connect to main panel via a 4-wire connection
- Simple wiring can be home run, daisy chained, or T-tapped
- Fully encrypted communication
- BUS Repeaters allows for module to be installed up to 14,000 feet (4,267.2 metres) from main panel
- 2 or 3 amp supervised power supplies allow for larger scale systems

Specification

HSM3408 8 Zone Expander

- The HSM3408 is a zone expander that adds up to 8 fully programmable zones to any PowerSeries Pro security system
- Supports no end-of-line, single end-of-line (0.5 kΩ - 28 kΩ), double end-of-line (0.5 kΩ - 15 kΩ), or triple end-of-line loops (0.5 kΩ - 7.5 kΩ)
- Connect 3/15/30 modules per system
- Simplify installation with easy to handle, removable terminal blocks
- Simplifies and enhances diagnostics by displaying zone resistance and Corbus voltages in real time

HSM3WIFI Programming WiFi Adapter

- The HSM3WIFI Adapter creates a wireless hotspot that can be used with either DLS 5 version 1.70+ or the PowerSeries Pro AlarmInstall Installation app
- SSID & Password configurable using the HSM3WIFI Configuration Manager

Specifications
Ordering Information:

HSM3408: .....8 hardwired zone expander
Dimensions: ...83 mm x 145 mm (3.25 inches x 5.7 inches)
Board Current Draw: .....50 mA
Input Voltage: .....10.8 VDC - 12.5 VDC
Operating Environment: ...-10˚ C to + 55˚ C (14˚ F to 131˚ F)
Relative Humidity: .....5% to 93%

Enclosures:
Standard metal cabinet (North America): HSC3010C
Red cabinet (Canada only): HSC3010CR
Attack resistant cabinet (North America): HSC3030CA

Specifications
Ordering Information:

HSM3WIFI: .....USB WIFI Adapter
Spectrum: ..... IEEE 802.11 b/g/n
Frequency band: .....2.4 GHz
Security: WPA2
Supply voltage: .....USB VBUS 5 VDC ± 5 %
Current: .....120 mA @ 5 V (typical); 380 mA @ 5 V
Panel interface: .....USB Type-A, Male
RF distance: ..... > 20 M (65.5 feet) line of sight (in the metal panel cabinet with the door open)
Default SSID: HSM3WIFI
Default password: 12345678
Static IP address: 192.168.55.1

Specification

HSM3204CX Power Supply with Corbus Repeater

- The HSM3204CX provides an additional 12 VDC, 2 amps of current along with 4 programmable Form C relay outputs
- Each module extends the BUS up to 4000 feet. Four modules may be connected together in series for a total of 14,000 feet
- Connects 1 module with HS3032 or up to 8 modules with HS3238/3248
- Displays battery charge levels and all Corbus voltages for simpler diagnostics
- Simplify installation with easy to handle, removable terminal blocks

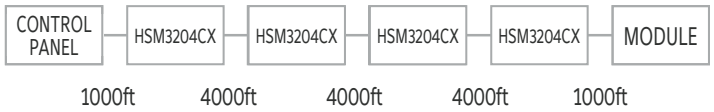

Specifications
Ordering Information:

HSM3204CX: .....2 Amp Power Supply with BUS Extender
Dimensions: ...191 mm X 97 mm (7.5 inches x 3.8 inches)
Board Current Draw: .....25 mA
Input Voltage: .....18 VDC
Operating Environment: ...-10˚ C to + 55˚ C (14˚ F to 131˚ F)
Relative Humidity: ..... 5% to 93%
Aux output Voltage: .....10.8VDC – 12.5 VDC
Aux output current: ..... 2 Amps

Enclosures:
Standard metal cabinet (North America): HSC3010C
Red cabinet (Canada only): HSC3010CR
Attack resistant cabinet (North America): HSC3030CAR

HSM3350 Supervised 3 Amp Power Supply

- Uses HS65WPSNA Power Supply adapter
- Simplify installation with easy to handle, removable terminal blocks
- Provides enhanced diagnostics information for simpler diagnostics
- The HSM3350 provides an additional 12 VDC, 3 amps of power
- Dual battery backups individually supervised
- Connect 3/4 modules per system
- Displays battery charge levels and all BUS voltages for simpler diagnostics

Specifications
Ordering Information:

HSM3350: .....3 Amp Power Supply
Dimensions: ...191 mm X 97 mm (7.5 inches x 3.8 inches)
Board Current Draw: .....35 mA
Input Voltage: .....18 VDC
Operating Environment: ...-10˚ C to + 55˚ C (14˚ F to 131˚ F)
Relative Humidity: ..... 5% to 93%
Aux output Voltage: .....10.8VDC – 12.5 VDC
Aux output current: ..... 3 Amps

Enclosures:
Standard metal cabinet (North America): HSC3010C
Red cabinet (Canada only): HSC3010CR
Attack resistant cabinet (North America): HSC3030CAR

Specification

LE9080 Cellular Communicator

- The LE9080 is a cellular radio designed to provide alarm communications to a central monitoring station
- Mounts on main Panel Board
- Uses LTE-15ANT / LTE-25ANT / LTE-50ANT antenna extension kits
- Used with Connect24 services

HS65WPSNA (S) Power Adapter

- The HS65WPSNA is the Power Adapter used for the PowerSeries Pro main panel and its power supply modules
- The HS65WPSNAS is the Power Adapter used for the HS3032-KIT1CF Fire kits in Canada

Specifications
Ordering Information:

LE9080: .....Cellular Radio Communciator
Dimensions: ....31 mm X 61 mm (1.2 inches x 2.4 inches)
Board Current Draw: .....28 mA
Input Voltage: .....3.4 VDC – 4.8 VDC
Operating Environment: ...-10˚ C to + 55˚ C (14˚ F to 131˚ F)
Relative Humidity: .....5% to 93%
Frequency bands in MHz:
LTE Bands:
LTE Band 12 – 700MHz AC
LTE Band 13 – 700MHz C
LTE Band 5 – 850MHz
LTE Band 4 – 1700 / 2100 MHz AWS1
LTE Band 2 – 1900MHz PCS
3G Bands:
FDD Band 5 – 850 MHz
FDD Band 2 – 1900 PCS
LTE Maximum transmission power: .....Class 3 200mW
3G Maximum transmission power: .....Class 3 250 mW

Specifications
Ordering Information:

HS65WPSNA: ...18 VDC Power Adapter with IEEE Type B plug
HS65WPSNAS: 18 VDC Power Adapter without plug. (Canada only)
Dimensions: ....191 mm X 97 mm (7.5 inches x 3.8 inches)
Input Voltage: .....100 VAC – 240 VAC 50/60Hz
Output Voltage: .....18 VDC
Operating Environment: .....-10˚ C to + 55˚ C (14˚ F to 131˚ F)
Relative Humidity: ..... 5% to 93%
Aux output current: ..... 3 Amps
Enclosures:
Standard metal cabinet (North America): HSC3010C
Red cabinet (Canada only): HSC3010CR
Attack resistant cabinet (North America): HSC3030CAR

DNA Chart

Intrusion Detectors


PowerG Wireless Door/Window Contact in White or Brown (PG9303)


PowerG Wireless Door/Window Contact with Auxiliary Input, in White or Brown (PG9945)


PowerG Wireless Commercial Magnetic Contact with Auxiliary Input (PG9309)


PowerG Wireless Recessed Contact (PG9307)


PowerG Wireless Shock Detector (PG9935)


PowerG Wireless Glass Break Detector (PG9922)


PowerG Wireless 360° Ceiling- mount PIR Detector (PG9862)


PowerG Wireless 360° Long Range Ceiling-mount PIR Detector (PG9872)


PowerG Wireless Digital Pet-Immune PIR Motion Detector (PG9914)


PowerG Wireless Curtain PIR Motion Detector (PG9924)


PowerG Wireless Mirror Optic PIR Motion Detector (PG9974P)


PowerG Wireless PIR Motion Detector with Integrated Camera (PG9934P)


PowerG Wireless Dual Technology (PIR & MW) Motion Detector (PG9984P)


PowerG Wireless Outdoor Magnetic Contact with Auxiliary Input (PG9312)


PowerG Wireless Advanced Outdoor Curtain PIR Detector (PG9902)


PowerG Wireless Outdoor PIR Motion Detector with Integrated Camera (PG9944)


PowerG Wireless Outdoor PIR Motion Detector (PG9994)

Communicators & Transmitters


Dual Path LTE/Internet Alarm Communicator compatible with ALARM.COM (TL880LEAT N/TL880LETL N)


Dual Path LTE/Internet Alarm Communicator compatible with ALARM.COM (TL880LTVZ N)


LTE Cellular Communicator (LE9080)

Keypads


PowerG Wireless Full Message LCD 2-Way Wire-Free Keypad with Prox and optional Voice Prompting (HS2LCDWFPRO9 / HS2LCDWFVPRO9)


Hardwired Full Message LCD Keypad (HS2LCDPRO)


PowerG Full Message LCD Keypad with Built-in Transceiver (HS2LCDRFPRO9)


Hardwired Touchscreen Keypad 7 inch with Prox Support in Black or White (HS2TCHPRO / HS2TCHPROBLK)

Sirens, Repeaters & Transceivers


PowerG Wireless Indoor Siren (PG9901 BATT)


PowerG Wireless Outdoor Siren (PG9911 BATT)


PowerG Wireless Repeater (PG9920)


PowerG Host Transceiver Module (HSM2HOST9)

Safety Sensors


PowerG Wireless Smoke and Heat Detector (PG9936)


PowerG Wireless CO Detector (PG9933)


PowerG Wireless Temperature Detector (PG9905)


PowerG Wireless Flood Detector (PG9985)

Arming Devices & Panic Buttons


PowerG Wireless Panic Key (PG9938)


PowerG Wireless 2-Button Key (PG9949)


PowerG Wireless 4-Button Key (PG9939)


PowerG Wireless 4-Button Key (PG9929)


Mini Prox Tag MPT

Software Support


PowerSeries Pro AlarmInstall Local Programming App


WebSA System Administrator Software


Routine System Management Software (RSM)

DLS 5 Downloading Software

Control Panels


8 - 248 Zone Control Panel (HS3032 / HS3128 / HS3248)

Modules


Power Supply Module (HSM2300)


High Current Output Module (HSM2204)


Low Current Output Module (HSM2208)


Two-Way Audio Module (HSM2955(R))


8 - 248 Zone Control Panel (HS3032 / HS3128 / HS3248)


8-Hardwired Zone Expander Module (HSM2108)


Power Supply with Corbus Repeater (HSM3204CX)


8 Zone Expander (HSM3408)


Supervised 3 Amp Power Supply (HSM3350)


Power Adapter (HS65WPSNA)


Programming WiFi Adapter (HSM3WIFI)

Vertical Applications

Retail

Ideal for shopping centers, big box stores, and large grocery stores

- PowerG wireless devices provide industry-leading area coverage
- The BUS extender, for extra-large area installations, provides 14 times the coverage distance
- Accommodates a variety of teams such as day shift, night merchandisers or cleaners with different auto-arming schedules
- Timer-activated arming ensures that all perimeter doors, including back doors, are secure
- With No-Activity Arming capability, the system will arm itself according to a programmable timer even when someone forgets to arm it.

Office buildings

Perfect for medical buildings and call centers

- Flexible arming allows you to individually partition the areas used by the different tenants who share a building, making each partition schedule unique.
- Scheduled events allow day-of-week and time-of-day special programming to accommodate day time tenants and night time cleaners
- Long-range PowerG technology and devices ensure 100% building area coverage

Warehouse/ Manufacturing

Ideal for food and beverage companies, cannabis producers, and large e-commerce based companies

- PowerG technology, including outdoor contacts, outdoor PIR motion detector, and outdoor siren provide optimal security
- Provides industry-leading area coverage with PowerG wireless devices and for extra-large area installations, the BUS extender allows for 14 times the coverage distance
- Utilize separate area arming for manufacturing, warehousing, office areas and server rooms, while still allowing access to cleaning crews and after-hours employees
- Enhanced security using prox tags and codes for entry into sensitive areas, plus the ability to now use 8-digit access codes
- Allows up to 1000 distinct user codes

Education

schools, colleges, campuses

- Best-in-class detectors and sensors offer a wide range of life safety and security protection with fire, smoke, CO detectors and more.
- Secure outdoor areas with PowerG outdoor contacts, outdoor PIR motion detector, and outdoor motion detector with integrated camera.
- Teachers/staff can request help from anywhere on campus by using wireless transmitters in case of an accident or a threat
- For extra-large area installations, use the BUS extender to for 14 times areas coverage and capacity to control up to 32 different areas independently, very well suited for large scale facilities. Add new buildings/ portables and scale the system up, with most on-board power to allow additional devices to be connected

Energy sector

Ideal for protecting outdoor generators, transmission towers, and storage areas

- Secures outdoor areas with PowerG outdoor contacts, outdoor PIR motion detector, and outdoor motion detector with integrated camera
- Receive video snapshots from alarm-triggers that help with event validation
- Long-lasting batteries in PowerG wireless devices enable maintenance-free use for up to 8 years

About Us

About Tyco

Tyco and its portfolio of brands form one of the largest security portfolios in the world. Engineers specializing in video security, access control, location-based security, and intrusion security give Tyco a competitive advantage when it comes to system integration. The company's focus is on turning data from sensors and systems into sharp insights and services that can solve those challenges and improve its customers' operations and performance. With more than a billion sensors and devices already in place across the globe, Tyco is in a unique position to deliver that future and make the Internet of Things work for its customers.

Visit **www.tyco.com** to find out more.

About Johnson Controls

Johnson Controls is a global diversified technology and multi industrial leader serving a wide range of customers in more than 150 countries. Our 120,000 employees create intelligent buildings, efficient energy solutions, integrated infrastructure and next generation transportation systems that work seamlessly together to deliver on the promise of smart cities and communities. Our commitment to sustainability dates to our roots in 1885, with the invention of the first electric room thermostat. We are committed to helping our customers win and creating greater value for all our stakeholders through strategic focus on our buildings and energy growth platforms. For additional information, please visit johnsoncontrols.com or follow us **@johnsoncontrols** on Twitter.

PN 30002601

Specifications

Zone Configuration

- 32, 128 or 248 wireless zones supported and up to 8 hardwired zones available on the controller
- 41 zone types and 15 programmable zone attributes
- Zone configurations available: normally closed, single EOL resistor, DEOL resistor, and TEOL resistor.
- Hardwired zone expansion (fully supervised) available using the model HSM2108 or HSM3408 (eight zone expander module)
- Wireless zone expansion (fully supervised) available using the HSM2Host 2-way wireless integration module operating at 915 MHz (North America), 433 MHz (Europe) and 912-919 MHz (international)

Access Codes

- Up to 1003 access codes: 1000 (level 2-EN), one installer code (level 3-EN), one maintenance code, and one guard code.
- Programmable attributes for each user code
- Access codes are either 4, 6 or 8 digits in length, depending on the setting of programming section [041]. Duplicate codes are not valid.

Note: For EN50131-1 Grade 2 compliant systems using 100 access codes or less, 6 digit codes must be used. If using more than 100 access codes, 8 digit codes must be used. For EN50131-1 Grade 3 compliant systems 8 digit codes must be used.

Warning Device Output

- 2 remote, wireless indoor/outdoor warning devices supported: models PGX901 (indoor), PGX911 (outdoor) (X=4, 8, or 9)
- Programmable as steady, pulsed or temporal three (as per ISO8201) and temporal four (CO alarm) output
- Warning device sounds alarms in the following priority: fire, CO, burg

Note: For NFA2P certified systems the delay for operating the warning device shall be set to max. 10 min.

Memory

- CMOS EEPROM memory
- Retains programming and system status on AC or battery failure for 20 years min. (not verified by UL)

Power Supply - North America

- Power Supply:HS65WPSNA (cord connected) and HS65WPSNAS (hardwired, use in ULC Commercial Burg Security Level IV and ULC Commercial Fire Monitoring applications)
- Primary: 120 VAC, 60 Hz, Energy Efficiency Class VI
- Secondary: 18 V DC, 3.6 A Limited Power Source (LPS)
- Model HS65WPSNA mounted in the same enclosure or outside, cord connected
- Model HS65WPS mounted in the same enclosure, permanently connected

Power Supply - International

- Power Supply: HS65WPS
- Primary: 100-240 V AC, 50 Hz, 1.7 A, Energy Efficiency Class VI
- Secondary: 18 Vdc, 3.6A, LPS
- Mounted in the same enclosure, permanently connected

Note: For installations using the power supply module mounted inside the cabinet, replace fuse only with the same type (20 mm) rated New fuse rating 250 V/3.15 A Slow Blow.

Regulated power supply:

- 3.6 A regulated, supervised
- Type A as per EN50131-6 Standard
- FET protected for Bell, Aux+ and Battery terminals
- Reverse battery detection/protection
- Supervision for input power and low battery
- Normal and high current battery charge options
- Supervised battery charging circuit

Current draw (control panel board assembly):

- 120 mA (nominal)

Bell Output:

- Ratings:
  - UL/ULC applications: 10.8 V DC - 12.5 V DC
  - EN applications: 10 V DC - 14 V DC
- 700 mA supervised (1 k Ohm) bell output (current limited at 2 amps)
- Steady, Pulsed, Temporal 3 fire, Temporal 4 CO alarm cadences
- Bell open short circuit detection (software + hardware)

Aux+:

- Ratings:
  - UL/ULC applications: 10.8 V DC - 12.5 V DC
  - EN applications: 10 V DC - 14 V DC
- Current = 2 A (shared with Corbus R(ed) and PGM outputs)

- Output ripple voltage: 600 mVp-p max.
- Onboard programmable outputs:
  - PGM 1 - 100 mA switched programmable output
  - PGM 2 - 300 mA current-limited switched programmable output. 2-Wire smoke detectors (100 mA current limited) are supported using this PGM
  - PGM 3 - 300 mA switched programmable output
  - PGM 4 - 100 mA switched programmable output
- Hardware PGM over current protection
- The voltage at any independent power output below which the power output fault signal or message is generated: 9.8 V DC
- Over-voltage protection trigger voltage: 15 V DC

Battery

- 12 V sealed lead acid, rechargeable
- Battery capacity: Refer to table "Aux loading and battery selection" on page 30
- Maximum standby time: Refer to "Aux loading and battery selection" on page 30 for each type of application.
- Recharging time to 80% 72 hours
- Recharging rate: 400 mA (12 hours max.), 700 mA (24 hour backup)
- Backup time: 24 hours (UL)
- Battery lifespan: 3-5 years
- Low battery trouble indication threshold 11.3 VDC
- Battery restore voltage 12.5 V
- Main board current draw (battery only):
  - HS3032/HS3128/HS3248 (no alternate communicator) standby 100 mA DC
  - HS3032/HS3128/HS3248, (including plug-in communicator) standby 120 mA DC
- Self-reseting FETs for short/overcurrent protection on the circuit board
- Internal clock locked to the internal Real Time Clock

The standby battery does not automatically recharge on reconnection of the AC mains (external power supply) if the battery terminal voltage is less than 9.6 VDC.

The minimum energy level of the standby battery in a charged state (as a percentage of the rated capacity for the range of batteries that can be used with the power supply) is 90% for 17 Ah batteries.

Operating Environmental Conditions

- Temperature range: UL/ULC: 0°C to +49°C (32°F to 120°F), For EN50131 applications: -10˚C to +55˚C
- Relative humidity: 5% to 93% RH non-condensing

Note: The alarm panel is not suitable for use external to the supervised premises.

Alarm Transmitter Equipment (ATE) Specification

- Digital dialer integral to the main control board
- Supports SIA and Contact ID
- Complies with TS203 021-1, -2, -3 Telecom equipment requirements and EN50136-1, EN50136-2, ATS SP3, DP2 (when used in conjunction with Ethernet and/or Cellular paths).
- The integral Ethernet communication port and optional plug-in cellular module (models 3G9080, 3H9080, LE9080 for UL/ULC and 3G9080-EU, GS9080 for EN50131 applications) can be installed in the same enclosure and configured as primary or back-up, with AES 128-bit encryption.
- Compliant with EN50136-1, EN50136-2 ATS configurations SP4, DP3.

System Supervision Features

The PowerSeries Pro continuously monitors a number of possible trouble conditions and provides audible and visual indication at the keypad. Trouble conditions include:

- AC power failure
- Zone trouble
- Fire trouble
- Telephone line trouble
- Communicator trouble
- Low battery condition
- RF jam
- AUX power supply fault
- Failure to communicate
- Module fault (supervisory or tamper)
- Power unit failure
- System overcurrent

Additional Features

- 2-way wireless device support
- Visual verification (images + audio)*
- Proximity tag support
- PGM scheduling
- Quick arming
- User, partition, module, zone and system labels
- Soak test*
- Programmable system loop response
- Keypad and panel software versions viewable through keypad
- Doorbell zone type
- Low battery PGM type

*Feature not evaluated by UL/ULC.

Additional Notes for EN50131 Compliant Installations

- The alarm system can be set/unset wth 6 or 8-digit user access codes, or using compatible wireless keyfobs. During the setting procedure, a setting indication is provided (exit delay annunciation). The setting is prevented if an alarm, trouble, or tamper condition exists. An indication is given if the system fails to set following the initiation of the setting procedure. The option to override a condition that prevents setting for the respective set period is provided. Override is possible using a valid user access code. When the system is set, a 30 second timer begins. The Armed LED on the keypad remains on for 30 seconds. When the system is in the set state, opening the door to the entry/exit route initiates the entry procedure. The system is unset using a valid user access code or an enrolled compatible keyfob.
- The alarm system does not support prioritization for indications.
- Masking signals are processed as intruder signals.

HS2LCDWF(V)PRO/ HS2LCD(RF)PROx
Installation Instructions

29010953R001

HS2LCDWF(V)PROx Introduction

These instructions must be used with the appropriate control panel installation manual with which this equipment is intended to be used. Operating instructions shall be made available to the user. The HS2LCDWF(V)PROx wireless keypad is compatible with wireless transceiver HSM2HOST, HS2LCDRFPROx keypads and panels HS3032, HS3128, HS3248.

WARNING: Please refer to the System Installation Manual for information on limitations regarding product use and function and information on the limitations as to liability of the manufacturer.

Note: These instructions shall be used in conjunction with the system Installation Manual of the Control Panel with which this equipment is intended to be used.

Safety instructions

Read the safety information before you install the equipment.

Important: This equipment must be installed by a skilled person only. A skilled person is an installer with appropriate technical training. The installer must be aware of potential hazards during installation and measures available to minimize risks to the installer and other people.

- Before you install this equipment, disconnect all power sources (for example mains, battery, and telephone line) connected to the alarm panel.
- Install the equipment indoors in a non-hazardous environment where the following conditions are met:
    - Pollution degree - Maximum 2
    - Over voltages - Category II
- Internal wiring must be routed to prevent strain on wire and terminal connections, loose terminal connections, and damage to conductor insulation.
- Instruct the user that there are no user serviceable parts in this equipment. All equipment must be serviced by a skilled person.

Specifications

- Temperature range: -10°C to +55°C (14°F to 131°F) UL/ULC: 0°C to +49°C (32°F to 120°F)
- Humidity (MAX): 93%R.H. non-condensing
- Plastic enclosure protection degree: IP30, IK04
- Power adaptor output voltage: 9.0Vdc @ 1.25A. Models - US/Latin America: HK-XX11-U09N (UL), Canada: HK-XX11-U09NC (ULC), EU: HK-XX11-U09EU, UK: HK-XX11-U09NGB, AUS./NZ, China: HK-XX11-U09NAU limited power supply, acceptable to the authority having jurisdiction.
- Restraints are in place for UL installations.
- This product is not to be connected to a receptacle that is controlled by a switch.

- Battery. 4 AA, 1.5V, Energizer alkaline consumer-grade (E91)
- Low Battery Indication: 4.5V
- HS2LCDWF(V)PROx current draw: 30mA(min)/105mA(max)
- Wall-mount tamper (connected when installed in UL commercial applications
- 5 programmable function keys
- Ready (Green LED), Armed (Red LED), Trouble/RF Jam (Red/Yellow), AC (Green)
- Frequency: 433MHz (Brazil, China, Aus.(CE), NZ (NA), South Africa (ICASA), MEA, India (WPC)
- Frequency: 868MHz (EN + Local, MEA (CE))
- Frequency: 912 - 919MHz (NA/LATAM, Argentina)
- Dimensions (LxWxD): 168mm x 122mm x 25 mm
- Weight: 370g (batteries included)

ⓘ **Note:** For UL commercial installations, the tamper switches are enabled.

Unpack

The HS2LCDWF(V)PROx keypad package is available in three configurations. The keypad contains patented technology for the Proximity (Prox) Tag.

Component	HS2LCDWF - Wall Mount	HS2LCDWFPROx - Prox	HS2LCDWFVPROx - Prox Tag w/verbal annunciation
HS2LCDWF wall bracket	1	1	1
Installation manual	1	1	1
Inner door sticker	1	1	1
AA batteries	4	4	4
Hardware pack	1	1	1
Prox tag		1	1

Mount the Keypad

Mount the keypad where it is accessible from designated points of entry and exit. Once a dry and secure location has been selected, perform the following steps to mount the keypad.

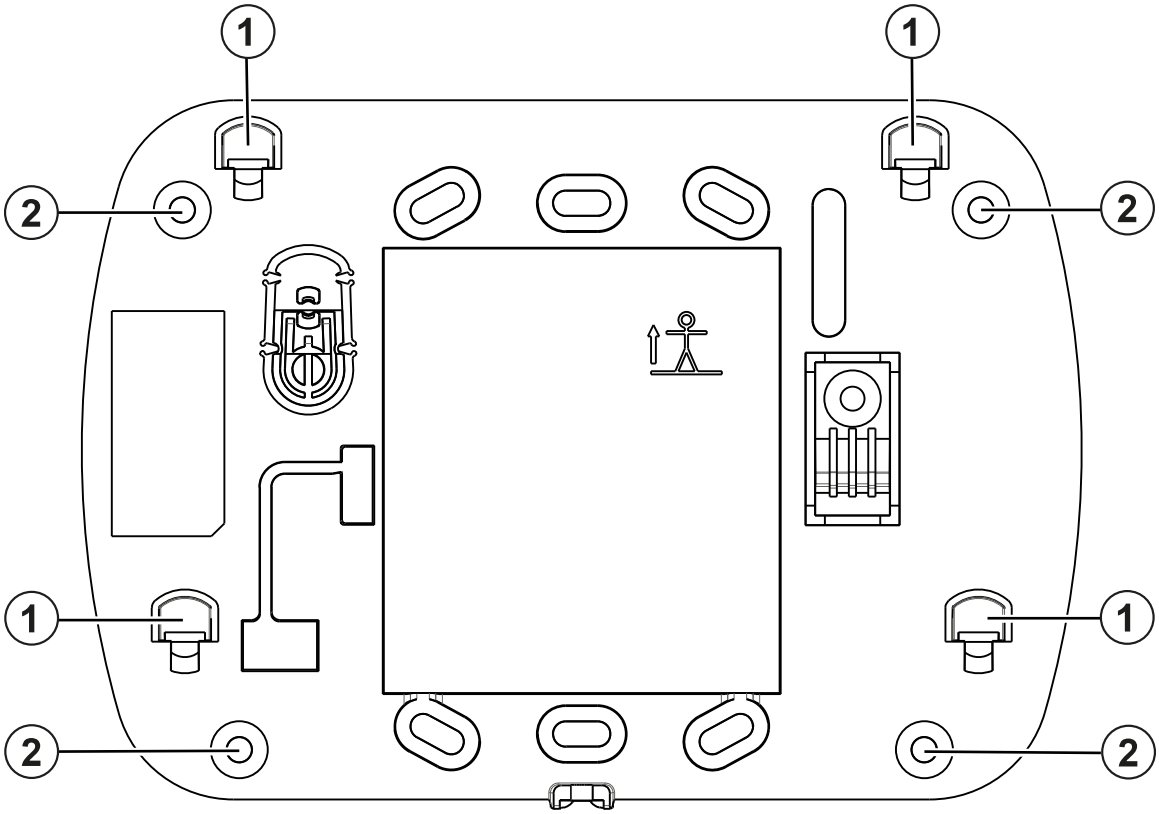

Callout	Description
1	Mounting tab
2	Screw hole

Wall Mounting Plate

1. Locate the screw holes (4) at each corner of the mounting plate.
2. Use the four screws provided to affix the mounting plate to the wall; ensure the mounting tabs are facing you (see following diagram). If the keypad is to be mounted on drywall, use plastic anchors.
3. Once the batteries are installed, align the four mounting slots in the HS2LCDWF(V)PROx housing with the four mounting tabs protruding from the mounting plate.
4. Firmly but carefully snap the keypad down onto the mounting plate.

Desk Stand - HS2LCDWFDMK (Optional)

1. Insert the four rubber feet provided the indentations in the bottom of the desk stand.
2. Place the desk stand on a secure, uncluttered surface.
3. Align the four mounting slots in the HS2LCDWF(V)PROx housing with the four mounting tabs protruding from the desk stand.

4. Slide the keypad into place. Firmly but carefully snap the keypad down onto the desk stand.

5. To fasten the keypad securely onto the desk stand, locate the hole in the center of the bottom of the desk stand. Using the screws provided, screw the keypad to the desk stand.

Apply Battery Power

1. If required, slide the keypad up and out from the mounting plate/desk stand (removing the screws first if required). The bay for the four AA batteries is open and visible at the back of the keypad.

2. Insert the batteries as directed on the back of the keypad. Ensure the correct polarity is observed.

3. Replace the keypad on the mounting plate/desk stand.

⚠ **CAUTION:** Do not mix old batteries with new ones.

⚠ **WARNING:** If a low battery trouble signal is received, the unit will operate for a duration of no longer than 30 days. When a low battery trouble signal is received, the batteries must be replaced to ensure proper operation of the unit.

ⓘ **Note:** If you arm and disarm the system twice a day, and do not use the proximity tag, voice, and chime features, the battery lasts for 3 years.

Apply AC Power

1. Slide the keypad up and out from the mounting plate/desk stand.

2. Locate the power adaptor jack at the back of the keypad housing.

3. Place the adaptor plug in the housing indentation, perpendicular to the keypad. Insert the adaptor plug firmly into the jack.

4. Pivot the adaptor plug downwards so that it fits flush with the housing. Guide the AC wire along the channel provided in the keypad housing; the wire will extend through the bottom of the housing.

5. Replace the keypad on the mounting plate/desk stand (in the latter case, a further channel is provided in the bottom of the desk stand. Guide the AC wire along this channel; the wireextend through an opening in the back of the stand).

6. Plug the adaptor into a wall outlet.

Only use the power adaptor (9.0VDC, @1.25A, 2.25W, limited power supply for models: HK-XX11-U09N (UL) and HK-XX11-U09NC (ULC).

⚠ **CAUTION:** The socket-outlet in the direct plug-in adaptor is inserted must be close to the keypad, easily accessible, and have unobstructed access. The plug of the adaptor serves as a means of disconnection from the supply mains.

3G9080/3G9080-EU/3H9080/LE9080 Cellular Alarm Communicator Installation Instructions

29010165R003

Important: Use this manual in conjunction with the PowerSeries Pro Reference Manual. Observe all the safety instructions specified in the manual. Before operation, ensure that the panel is fully assembled and closed.
Safety information: All servicing, except backup battery replacement, must be performed by a service person only. Use only authorized accessories with this equipment. Observe and respect all rules imposed by local electrical codes. This manual contains information on limitations regarding product use and function, and on the limitations as to the liability of the manufacturer. Read the entire manual carefully. For warning information, refer to the PowerSeries Pro alarm system Reference Manual. The communicator must be installed by service persons only and used in an environment that provides a maximum pollution degree of 2 and an overvoltages category II in non-hazardous, indoor locations only. Observe these instructions and the instructions specified within the panel manual.
Model information: All models are compatible with the control panels HS3032, HS3128, and HS3248. The communicator supports Internet Protocol (IP) transmission of panel and communicator events over HSPA/GPRS or LTE. The communicators are compatible with the following Sur-Gard receivers: SG-System I V1.4+, SG-System II V2.14+, SG-DRL3-IP V2.36+, SG-DRL4-IP V1.29+ and SG-DRL5-IP V1.05+ (required for visual verification support).

Technical specifications

The following technical specifications apply to all models.
Input voltage: 3.4 - 4.2 V, nominal 3.8 V (provided by the host alarm panels HS3032, HS3128, and HS3248).
Standby current: 12 - 28 mA at 3.8 V.
Alarm (transmitting) current: 750 mA at 3.8 V (max avg).
Operating temperature: -10°C to 55°C. UL/ULC has only verified operation for range 0 °C to 49°C.
Relative humidity: 5% to 93%, noncondensing.
Mechanical specifications: 81 x 61 x 11 mm (W x L x H); weight is 25 g.

Model	Market	Operating frequency (MHz)	Typical antenna gain (dBi)
LE9080 - UL/ULC listed	Canada, USA	3G - B5: UL: 824 – 849, DL: 869 – 894 B2: UL: 1850 – 1910, DL: 1930 – 1990 4G - B12: UL: 699 – 716, DL: 729 – 746 B13: UL: 777 – 787, DL: 746 – 756 B5: UL: 824 – 849, DL: 869 – 894 B4: UL: 1710 – 1755, DL: 2110 – 2170 B2: UL: 1850 – 1910, DL: 1930 – 1990	1.3 6.8 1.2 2.2 1.3 4.6 6.8
3G9080 - UL/ULC listed	Argentina	2G - B5: UL: 824 – 849, DL: 869 – 894 B2: UL: 1850 – 1910, DL: 1930 – 1990 3G - B5: UL: 824 – 849, DL: 869 – 894 B2: UL: 1850 – 1910, DL: 1930 – 1990	1.4 6.7 1.4 6.7
3G9080-EU - CE compliant	Europe	2G - B8: UL: 880 – 915, DL: 925 – 960 B3: UL: 1710 – 1785, DL: 1805 – 1880 3G - B8: UL: 880 – 915, DL: 925 – 960 B1: UL: 1920 – 1980, DL: 2110 – 2170	2.0 4.6 2.0 6.7/2.8

Inserting and removing the SIM card

Use caution when you handle the SIM card. To avoid damage to the SIM card, ensure that there are no bent or scratched contacts.
To insert and remove the SIM card, complete the following step:
- Insert or remove the SIM card by sliding it in or out of the holder. The notch on the corner of the SIM card must align with the notch on the base of the holder.

Installing and replacing the communicator

Note: Before installing the communicator, confirm with the local service provider that there is an available and active network in the area.

Opening the unit

To open the unit, complete the following step:
- Disconnect power from the panel by removing the power cord and battery.

Installing the communicator

To install the communicator, complete the following steps.
1. On the new communicator, if required, remove the protective metal tab from the 24-pin CON1 header.
2. Align the three holes on the communicator module with the plastic pegs on the alarm panel, ensuring the 24-pin connectors are aligned with matching pins on the panel. See Figure 3.
3. Press the module carefully onto the alarm panel.
4. To attach the antenna place a nylon washer on either side of the hole on the panel and screw the cable into the antenna. See Figures 4 and 5.
5. Gently press the main antenna cable connector into the jack labeled JK2 – Main Ant on the PCB. Repeat this step for the diversity antenna, and connect to the jack labeled JK1 – Div Ant on the PCB.
6. Apply power to the panel by plugging in the power supply module.

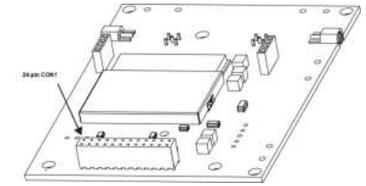

Figure 1: Preparing the panel

Figure 2: Preparing the communicator

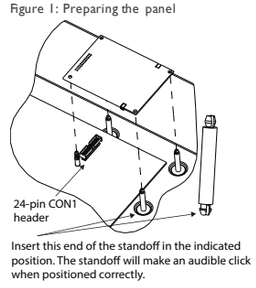

Figure 3: Installing the communicator

Figure 4: One antenna installation

Figure 5: Two antenna installation

Replacing the communicator

Note: For panels with a communicator installed, you can use the foam pad in the unit or the foam pad provided in the standalone cellular communicator kit.
To replace the communicator, complete the following steps.
1. Disconnect power from the panel by unplugging the transformer and battery.
2. Gently remove the main and diversity antenna cables from the PCB.
3. Release the stand-offs and pull up on the communicator to remove it from the header.
4. Complete steps 1- 6 in Installing the Communicator.

Communicator configuration

For information on how to configure the communicator, refer to the PowerSeries Pro alarm system Reference Manual.

Placement test

To ensure that the communicator is active with a strong signal connection, place the PowerSeries Pro panel in its intended location and perform the following steps.
1. Ensure the SIM card has been activated.
2. Using the keypad, enter placement test through installer's programming: [*][8][Installer Code][850].
3. View and record the number of bars showing on the LCD keypad.
4. Compare with the number of bars indicated in the CSQ Levels column shown in the following table.
5. If 3 or more bars are shown, the location is good and no further action is required.
6. If 2 or less bars are shown, the location is poor and the communicator may need to be relocated, or an external antenna extension kit can be used to improve the signal strength.

Signal strength	CSQ level	Signal level (dBm)	Installer action
5 bars	14 and higher	-84 and higher	Location is GOOD.
4 bars	11 to 13	-90 to -85	
3 bars	7 to 10	-98 to -91	
2 bars	5 to 6	-102 to -99	Location is BAD. Not suitable for Cellular operation
1 bar	1 to 4	-108 to -103	
No signal	0	-108.8	Check if Cellular coverage is active in your area.

Viewing troubles

For information on how to view troubles, refer to the PowerSeries Pro alarm system Reference Manual.

Limited warranty

Digital Security Controls (DSC) warrants that for a period of 12 months from the date of purchase, the product shall be free of defects in materials and workmanship under normal use and that in fulfilment of any breach of such warranty, DSC shall, at its option, repair or replace the defective equipment upon return of the equipment to its repair depot. This warranty applies only to defects in parts and workmanship and not to damage incurred in shipping or handling, or damage due to causes beyond the control of Digital Security Controls such as lightning, excessive voltage, mechanical shock, water damage, or damage arising out of abuse, alteration or improper application of the equipment. The foregoing warranty shall apply only to the original buyer, and is and shall be in lieu of any and all other warranties, whether expressed or implied and of all other obligations or liabilities on the part of Digital Security Controls. Digital Security Controls neither assumes responsibility for, nor authorizes any other person purporting to act on its behalf to modify or to change this warranty, nor to assume for it any other warranty or liability concerning this product. In no event shall Digital Security Controls be liable for any direct, indirect or consequential damages, loss of anticipated profits, loss of time or any other losses incurred by the buyer in connection with the purchase, installation or operation or failure of this product. Warning: Digital Security Controls recommends that the entire system be completely tested on a regular basis. However, despite frequent testing, and due to, but not limited to, criminal tampering or electrical disruption, it is possible for this product to fail to perform as expected.

EULA

IMPORTANT - READ CAREFULLY: DSC Software purchased with or without Products and Components is copyrighted and is purchased under the following license terms:
This End-User License Agreement ("EULA") is a legal agreement between You (the company, individual or entity who acquired the Software and any related Hardware) and Digital Security Controls, a division of Tyco Safety Products Canada Ltd. ("DSC"), the manufacturer of the integrated security systems and the developer of the software and any related products or components ("HARDWARE") which You acquired.
If the DSC software product ("SOFTWARE PRODUCT" or "SOFTWARE") is intended to be accompanied by HARDWARE, and is NOT accompanied by new HARDWARE, You may not use, copy or install the SOFTWARE PRODUCT. The SOFTWARE PRODUCT includes computer software, and may include associated media, printed materials, and "online" or electronic documentation.
Any software provided along with the SOFTWARE PRODUCT that is associated with a separate end-user license agreement is licensed to You under the terms of that license agreement.
By installing, copying, downloading, storing, accessing or otherwise using the SOFTWARE PRODUCT, You agree unconditionally to be bound by the terms of this EULA, even if this EULA is deemed to be a modification of any previous arrangement or contract. If You do not agree to the terms of this EULA, DSC is unwilling to license the SOFTWARE PRODUCT to You, and You have no right to use it.

SOFTWARE PRODUCT LICENSE

The SOFTWARE PRODUCT is protected by copyright laws and international copyright treaties, as well as other intellectual property laws and treaties. The SOFTWARE PRODUCT is licensed, not sold.

1. GRANT OF LICENSE This EULA grants You the following rights:
Software Installation and Use - For each license You acquire, You may have only one copy of the SOFTWARE PRODUCT installed.
Storage/Network Use - The SOFTWARE PRODUCT may not be installed, accessed, displayed, run, shared or used concurrently on or from different computers, including a workstation, terminal or other digital electronic device ("Device"). In other words, if You have several workstations, You will have to acquire a license for each workstation where the SOFTWARE will be used.
Backup Copy - You may make back-up copies of the SOFTWARE PRODUCT, but You may only have one copy per license installed at any given time. You may use the back-up copy solely for archival purposes. Except as expressly provided in this EULA, You may not otherwise make copies of the SOFTWARE PRODUCT, including the printed materials accompanying the SOFTWARE.

2. DESCRIPTION OF OTHER RIGHTS AND LIMITATIONS
Limitations on Reverse Engineering, Decompilation and Disassembly - You may not reverse engineer, decompile, or disassemble the SOFTWARE PRODUCT, except and only to the extent that such activity is expressly permitted by applicable law notwithstanding this limitation. You may not make any changes or modifications to the Software, without the written permission of an officer of DSC. You may not remove any proprietary notices, marks or labels from the Software Product. You shall institute reasonable measures to ensure compliance with the terms and conditions of this EULA.
Separation of Components - The SOFTWARE PRODUCT is licensed as a single product. Its component parts may not be separated for use on more than one HARDWARE unit.
Single INTEGRATED PRODUCT - If You acquired this SOFTWARE with HARDWARE, then the SOFTWARE PRODUCT is licensed with the HARDWARE as a single integrated product. In this case, the SOFTWARE PRODUCT may only be used with the HARDWARE as set forth in this EULA.
Rental - You may not rent, lease or lend the SOFTWARE PRODUCT. You may not make it available to others or post it on a server or web site.
Software Product Transfer - You may transfer all of Your rights under this EULA only as part of a permanent sale or transfer of the HARDWARE, provided You retain no copies, You transfer all of the SOFTWARE PRODUCT (including all component parts, the media and printed materials, any upgrades and this EULA), and provided the recipient agrees to the terms of this EULA. If the SOFTWARE PRODUCT is an upgrade, any transfer must also include all prior versions of the SOFTWARE PRODUCT.
Termination - Without prejudice to any other rights, DSC may terminate this EULA if You fail to comply with the terms and conditions of this EULA. In such event, You must destroy all copies of the SOFTWARE PRODUCT and all of its component parts.
Trademarks - This EULA does not grant You any rights in connection with any trademarks or service marks of DSC or its suppliers.

3. COPYRIGHT
All title and intellectual property rights in and to the SOFTWARE PRODUCT (including but not limited to any images, photographs, and text incorporated into the SOFTWARE PRODUCT), the accompanying printed materials, and any copies of the SOFTWARE PRODUCT, are owned by DSC or its suppliers. You may not copy the printed materials accompanying the SOFTWARE PRODUCT. All title and intellectual property rights in and to the content which may be accessed through use of the SOFTWARE PRODUCT are the property of the respective content owner and may be protected by applicable copyright or other intellectual property laws and treaties. This EULA grants You no rights to use such content. All rights not expressly granted under this EULA are reserved by DSC and its suppliers.
EXPORT RESTRICTIONS - You agree that You will not export or re-export the SOFTWARE PRODUCT to any country, person, or entity subject to Canadian export restrictions.
CHOICE OF LAW - This Software License Agreement is governed by the laws of the Province of Ontario, Canada.
ARBITRATION - All disputes arising in connection with this Agreement shall be determined by final and binding arbitration in accordance with the Arbitration Act, and the parties agree to be bound by the arbitrator's decision. The place of arbitration shall be Toronto, Canada, and the language of the arbitration shall be English.

LIMITED WARRANTY

NO WARRANTY - DSC PROVIDES THE SOFTWARE "AS IS" WITHOUT WARRANTY. DSC DOES NOT WARRANT THAT THE SOFTWARE WILL MEET YOUR REQUIREMENTS OR THAT OPERATION OF THE SOFTWARE WILL BE UNINTERRUPTED OR ERROR-FREE.
CHANGES IN OPERATING ENVIRONMENT - DSC shall not be responsible for problems caused by changes in the operating characteristics of the HARDWARE, or for problems in the interaction of the SOFTWARE PRODUCT with non-DSC-SOFTWARE or HARDWARE PRODUCTS.
LIMITATION OF LIABILITY; WARRANTY REFLECTS ALLOCATION OF RISK - IN ANY EVENT, IF ANY STATUTE IMPLIES WARRANTIES OR CONDITIONS NOT STATED IN THIS LICENSE AGREEMENT, DSC'S ENTIRE LIABILITY UNDER ANY PROVISION OF THIS LICENSE AGREEMENT SHALL BE LIMITED TO THE GREATER OF THE AMOUNT ACTUALLY PAID BY YOU TO LICENSE THE SOFTWARE PRODUCT AND FIVE CANADIAN DOLLARS (CAD$5.00). BECAUSE SOME JURISDICTIONS DO NOT ALLOW THE EXCLUSION OR LIMITATION OF LIABILITY FOR CONSEQUENTIAL OR INCIDENTAL DAMAGES, THE ABOVE LIMITATION MAY NOT APPLY TO YOU.
DISCLAIMER OF WARRANTIES - THIS WARRANTY CONTAINS THE ENTIRE WARRANTY AND SHALL BE IN LIEU OF ANY AND ALL OTHER WARRANTIES, WHETHER EXPRESSED OR IMPLIED (INCLUDING ALL IMPLIED WARRANTIES OF MERCHANTABILITY OR FITNESS FOR A PARTICULAR PURPOSE) AND OF ALL OTHER OBLIGATIONS OR LIABILITIES ON THE PART OF DSC. DSC MAKES NO OTHER WARRANTIES. DSC NEITHER ASSUMES NOR AUTHORIZES ANY OTHER PERSON PURPORTING TO ACT ON ITS BEHALF TO MOD8IFY OR TO CHANGE THIS WARRANTY, NOR TO ASSUME FOR IT ANY OTHER WARRANTY OR LIABILITY CONCERNING THIS SOFTWARE PRODUCT.
EXCLUSIVE REMEDY AND LIMITATION OF WARRANTY - UNDER NO CIRCUMSTANCES SHALL DSC BE LIABLE FOR ANY SPECIAL, INCIDENTAL, CONSEQUENTIAL OR INDIRECT DAMAGES BASED UPON BREACH OF WARRANTY, BREACH OF CONTRACT, NEGLIGENCE, STRICT LIABILITY, OR ANY OTHER LEGAL THEORY. SUCH DAMAGES INCLUDE, BUT ARE NOT LIMITED TO, LOSS OF PROFITS, LOSS OF THE SOFTWARE PRODUCT OR ANY ASSOCIATED EQUIPMENT, COST OF CAPITAL, COST OF SUBSTITUTE OR REPLACEMENT EQUIPMENT, FACILITIES OR SERVICES, DOWN TIME, PURCHASERS TIME, THE CLAIMS OF THIRD PARTIES, INCLUDING CUSTOMERS, AND INJURY TO PROPERTY.
DSC recommends that the entire system be completely tested on a regular basis. However, despite frequent testing, and due to, but not limited to, criminal tampering or electrical disruption, it is possible for this SOFTWARE PRODUCT to fail to perform as expected.

Regulatory Information

FCC MODIFICATION STATEMENT - Digital Security Controls has not approved any changes or modifications to this device by the user. Any changes or modifications could void the user's authority to operate the equipment. Digital Security Controls n'approuve aucune modification apportée à l'appareil par l'utilisateur, quelle qu'en soit la nature. Tout changement ou modification peuvent annuler le droit d'utilisation de l'appareil par l'utilisateur.
FCC AND ISED CANADA INTERFERENCE STATEMENT - This device complies with Part 15 of the FCC Rules. Operation is subject to the following two conditions: (1) this device may not cause interference, and (2) this device must accept any interference, including interference that may cause undesired operation of the device. This device complies with ISED Canada licence-exempt RSS standard(s). Operation is subject to the following two conditions: (1) this device may not cause interference, and (2) this device must accept any interference, including interference that may cause undesired operation of the device.
Le présent appareil est conforme aux CNR d'ISED Canada applicables aux appareils radio exempts de licence. L'exploitation est autorisée aux deux conditions suivantes: (1) l'appareil ne doit pas produire de brouillage, et (2) l'utilisateur de l'appareil doit accepter tout brouillage radio électrique subi, même si le brouillage est susceptible d'en comprom-ettre le fonctionnement.

FCC CLASS B DIGITAL DEVICE NOTICE -This equipment has been tested and found to comply with the limits for a Class B digital device, pursuant to part 15 of the FCC Rules. These limits are designed to provide reasonable protection against harmful interference in a residential installation. This equipment generates uses and can radiate radio frequency energy and, if not installed and used in accordance with the instructions, may cause harmful interference to radio communications. However, there is no guarantee that interference will not occur in a particular installation. If this equipment does cause harmful interference to radio or television reception, which can be determined by turning the equipment off and on, the user is encouraged to try to correct the interference by one or more of the following measures:
- Reorient or relocate the receiving antenna.
- Increase the separation between the equipment and receiver.
- Connect the equipment into an outlet on a circuit different from that to which the receiver is connected.
- Consult the dealer or experienced radio/television technician for help.

CAN ICES-3 (B) / NMB-3 (B)

Model LE9080 FCC ID: F5318LE9080 IC: 160A-LE9080

Model 3G9080 FCC ID: F53173G9080 IC: 160A-3G9080

Model 3H9080 FCC ID: F53183H9080 IC: 160A-3H9080

Note: Only models LE9080, 3G9080 and 3H9080 are UL/ULC listed.

FCC/ISED CANADA WIRELESS NOTICE

This equipment complies with FCC and ISED Canada radiation exposure limits set forth for an uncontrolled environment. The antenna should be installed and operated with minimum distance of 20 cm between the radiator and your body.
Cet appareil est conforme aux limites d'exposition aux ray-onnements de la ISED Canada pour un environnement non contrôlé. L'antenne doit être installé de façon à garder une distance minimale de 20 centimètres entre la source de rayonnements et votre corps.
Antenna gain must be below. Gain de l'antenne doit être ci-dessous:

Frequency band/Bande de fréquence	LE9080	3G9080	3H9080
GSM850/FDD V	1.3 dBi	1.4 dBi	1.3 dBi
PCS1900/FDD ii	6.8 dBi	6.7 dBi	
LTE B2	6.8 dBi		
LTE B4	4.6 dBi		
LTE B5/B12/B13	1.3/1.2/2.2 dBi		

This transmitter must not be co-located or operating in conjunction with any other antenna or transmitter. L'émetteur ne doit pas être colocalisé ni fonctionner conjointement avec à autre antenne ou autre émetteur.

FCC/IC LABEL: This modular transmitter LE9080, 3G9080 or 3H9080 is labeled with its own FCC ID and IC number. When the module is installed inside the host device HS3256, HS3128 or HS3032 and the FCC ID/IC of the module is not visible, the host device shall display the provided label referring to the FCC ID and IC of the enclosed module. This label is shipped together with the module and it is the responsibility of the integrator to apply it to the exterior of the enclosure as displayed in the following figure. Le modulaire émetteur LE9080, 3G9080 ou 3H9080 est étiqueté avec son propre ID FCC et le numéro IC. Lorsque le module est installé à l'intérieur du dispositif hôte HS3256, HS3128 ou HS3032 et la FCC ID / IC du module ne soit pas visible, le dispositif d'accueil affiche l'étiquette fournie se référant à l'ID FCC et IC du module ci-joint. Ce label est livré avec le module et il est de la responsabilité de l'intégrateur de l'appliquer à l'extérieur de l'enceinte, comme indiqué dans la figure suivante.

Model LE9080 Contains FCC ID: F5318LE9080 Contains IC: 160A-LE9080
Model 3G9080 Contains FCC ID: F53173G9080 Contains IC: 160A-3G9080
Model 3H9080 Contains FCC ID: F53183H9080 Contains IC: 160A-3H9080

SIMPLIFIED DECLARATION OF CONFORMITY: Hereby, Tyco Safety Products Canada Ltd declares that this radio equipment is in compliance with Directive 2014/53/EU. The full text of the EU declaration of conformity is available at the following internet address.

Note: Applies to models 3G9080-EU and GS9080 only.

Model 3G080-EU - http://dsc.com/pdf/1804001

Model GS9080 - http://dsc.com/pdf/1804002

Operating frequency bands and related max radio-frequency power transmitted:

Frequency band (MHz)	Maximum power
EGSM900 890.0 - 914.8	Class 4 (2 W) @ 900 MHz, GSM
EGSM900 880.2 - 889.8	Class 1 (1 W) @ 1800 MHz, GSM
DSC1800 1710.2 - 1784.8	Class E2 (0.5 W) @ 900 MHz, EDGE
WCDMA (band VIII) 882.4 - 912.6	Class E2 (0.4 W) @ 900 MHz, EDGE

European single point of contact: Tyco Safety Products, Voltaweg 20, 6101 XK Echt, Netherlands.

Notes for EN50136-1:2012 compliant installations (applicable only to models 3G9080-EU and GS9080): The models 3G9080-EU and GS9080 connect to compatible DSC alarm control panels HS3128, HS3032 using the DSC proprietary serial interface. The module operates in pass-through mode and it does acknowledge the alarm to the compatible control panel after an acknowledgement has been received from the compatible alarm receiver.

1. The 3G9080-EU ,GS9080 module is monitored by the control panel and it is programmed via the programming menu available from the compatible keypad connected to the alarm control panel HS3128, HS3023. The module is connected as shown in the diagram included in this manual.
2. The HSPA 3G/GSM Cellular path is immune to conducted and radiated RF fields with levels up to 10V/m as tested per EN50130-4 Standard.
3. The 3G9080-EU, GS9080 module conforms with radiated emissions levels for Class B equipment as per standards EN61000-6-3/EN55032/CISPR32.
4. The 3G9080- EU module has only one communication path: HSPA 3G or GSM Cellular communication path using 900/1800/2100MHz Public Cellular Network. The HSPA 3G/GSM Cellular communication path that can be used in an ATS with the follwoing categories:
   - Single Path mode SP4, or
   - Dual Path mode DP2 in conjunction with the compatible control panel HS3128/HS3032 integrated PSTN communicator or
   - Dual Path DP3 in conjunction with the compatible control panel HS3128/HS3032 integrated Ethernet communicator.
5. 5. Models 3G9080-EU, GS9080 use sequential authentyication for substitution security and encryption AES128 bit for information security, The AES128 bit key is validated by NIST, Certificate No. 5372.
6. 3G9080-EU, GS9080 has been tested for compliance in conjunction with the following applicable standards:EN50136- 2:2013, EN50131-10:2014, Grade 3, Class II, ATS configuration: SP3, DP2, DP3. For EN50131-1:2006/A1:2009 /A2:2017 compliant installations, the following programming options shall be set as described: Supervision heartbit set to 180 s for SP4 and DP3 configuration along with the ARC receiver supervison window set to 180s. For DP2 configuration the supervison shall be set to 30 min. Models 3G9E80- EU, GS9080 have been certified under CERTALARM by Telefication in accordance withEN50131-1:2006/A1:2009/A2:2017, EN50131-10:2014 and EN50136-2:2013 requirements for Grade 3, Class II ATS Configurations: SP4, DP2, DP3

tyco | Kantech

Data Sheet

KT-1 – Ethernet-Ready One-Door Controller

Key Features

- Configurable in two different modes: Provides advanced access control features when used with EntraPass Security Management Software or basic door security in Standalone Mode
- Single capacitive touch button for fast controller enrollment (EntraPass Security Management Software)
- Flexible power input – Power over Ethernet (PoE), PoE+ or 12 VDC
- Choose from single gang mount (KT-1) or cabinet mount (KT-1-PCB)* installation options
- End-to-end encryption using Kantech's ioSmart reader & smart card
- Compatible with EntraPass Security Management Software v6.02 or higher

KT-1 Ethernet-ready one door controller supports two readers (entry and exit) and can be configured in two user friendly operational modes. KT-1's Standalone Mode offers basic one door security using a simple web browser and without the need to connect to a host system. Alternatively KT-1 can be used with the powerful EntraPass Security Management Software to provide more advanced and fully integrated access control features.

KT-1 Standalone Mode

Ideal for sites that only need basic door security, the KT-1 single door controller features an embedded web server which enables it to operate in a Standalone Mode – meaning no EntraPass software is required.

*KT-1-PCB is available in Standalone Mode, need EntraPass Security Management Software for serial interface and DSC integration

Johnson Controls

One Combined Hardware and Web-based Software Solution

With no extra security software to purchase and install, and using an intuitive web browser for quick set up, KT-1 Standalone provides a cost-effective, yet feature rich alternative for one-door security.

Responsive Web-based Software

Intuitive and responsive web-based software enables you to simply manage and configure your one-door security from anywhere, using a desktop or mobile device.

Standalone Set-Up Wizard

KT-1 Standalone offers the ultimate simplicity in access control installation. Simply power up KT-1; connect to a web browser; follow the quick set-up configuration wizard and your one-door security is up and running in minutes.

Standalone Mode Parameters

Function	Limit
Cardholders	2,000 (1,000 with image/ 1,000 without image)
Door Access	Per door, per user
Card Families or Site Codes	Unlimited
Events	60,000 (Offline Mode)
Operators	2 (Installer, Operator)
Schedules	20 (5 intervals)
Holidays	25
Action Scheduler	100
Monitored Points (Inputs)	4
Auxiliary Outputs	4
Browsers	Safari, Google Chrome, Mozilla Firefox, Internet Explorer, Microsoft Edge
Mobile Operating Software	iOS, Android (No native app)
Integrations	Basic intrusion via relays
Upgrade Path	EntraPass/ hattrix
Languages	English, French, Spanish, Italian
Firmware version	KT-1 Standalone version 2.04 & higher. (Subject to firmare upgrade fees)

KT-1 using EntraPass

Advanced and fully integrated access control

Using EntraPass software a single KT-1 Controller can control one door or can act as a 'head IP controller', linking together 31 additional controllers under one IP connection in EntraPass. This significantly reduces the amount of IP connections required to EntraPass and reduces programming time on the software, thus creating installation cost benefits and a highly scalable solution.

One Touch for Quick Connection to EntraPass

The KT-1 controller features a capacitive touch-sensitive button for plug and play installation. Simply provide an IP connection, push a single button and you're done. There is no need to manually enter MAC/Serial numbers. With its innovative single button programming, the KT-1 is automatically detected and enrolled onto the EntraPass security management software (v6.02 and higher). Quickly connect using Universal Plug and Play (UPnP) protocol allowing the controller to be network discoverable without requiring the IP address*.

With its Ethernet port for direct network connection, its Power over Ethernet capabilities and its unique single button programming, the KT-1 controller is up and running in just a few simple steps.

EntraPass web & go

Combine the KT-1 controller with EntraPass security management software and the EntraPass web and go mobile applications to create an innovative solution that installs quickly, can be managed remotely and provides a superior user experience. Admin users can connect via a web browser or a dedicated app on their smart phone/tablet and manage common security tasks wherever they are.

Alarm Panel Integration

DSC MAXSYS, PowerSeries, PowerSeries Neo and PowerSeries Pro alarm panel data integration can be accomplished by connecting it to the KT-1 controller (KT-1-PCB model only). Using this controller; EntraPass Special, Corporate or Global Editions are able to receive intrusion events, view the status of zones and partitions, and program users' code. In addition the system can be armed/disarmed (single or multiple partitions) via the reader or manual operation from the workstation.

Encrypted and Efficient Network Communication

The KT-1 controller uses 128-bit AES encryption protect communication. It also acts as a polling device to ensure the controllers communicate with EntraPass only as required, thus reducing network traffic. Flexible options allow KT-1 to connect to EntraPass via:

- On-board IP (Ethernet) port
- RS-485 (COM1) port for communication between the EntraPass Gateway/ Kantech Network Communication Controller (KTNCC) and KT-300/KT-400 door controllers.

*Universal Plug and Play (UPnP) feature available when KT-1 configured in either EntraPass Security Management Software or Standalone Mode

Basic System Diagram

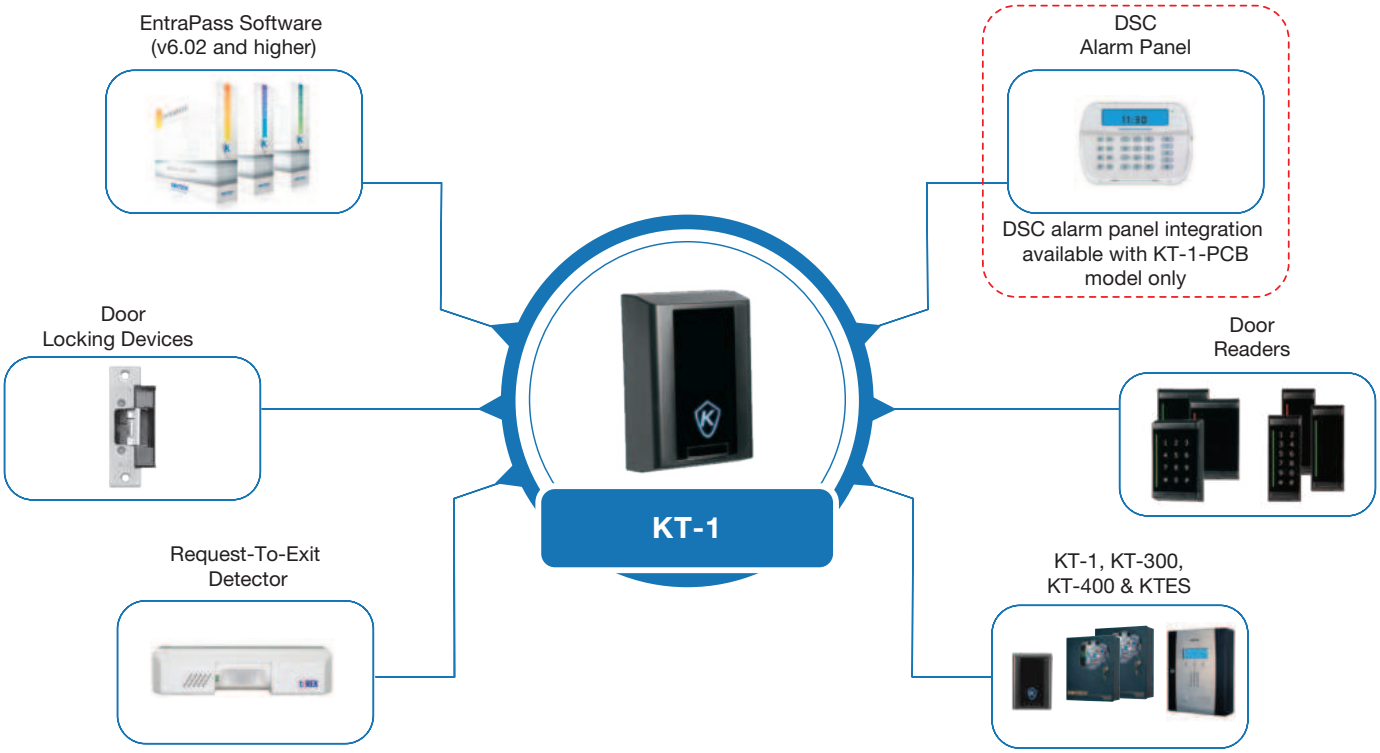

Specifications

Physical	
Plastic Housing Dimensions (H x W x D)	12.9 x 8.6 x 4.6 cm (5.1 x 3.4 x 1.8 in)
Weight	305 g (10.8 oz)
KT-1-PCB	
Dimensions (H x W x D)	13.8 x 12.1 x 4.8 cm (5.4 x 4.8 x 1.9 in)
Weight	395 g (13.9 oz)
Environmental	
Operating Temperature	2° to 40°C (35° to 104°F)
Operating Humidity	0% to 95% non-condensing
Electrical	
KT-1/KT-1-PCB Power Input	12 VDC / PoE / PoE+, 2.2 A
Reader Power Output	Maximum 0.5 A @ 12 VDC, typical 250mA per reader, protected and supervised
Lock Device Power	12 VDC, typical 750mA supervised (PoE+ & 12vdc power input) & 12 VDC, typical 250mA supervised (PoE)

Operational	
One Button Enrollment	Capacitive touch-sensitive button (EntraPass Security Management Software)
Reader Types	Wiegand, proximity, ABA clock and data, bar code, magnetic, integrated keypad, smart card, RS-485 (Kantech Protocol)
# of Cards when disconnected from EntraPass (Offline Mode)	100,000 (KT-1 and KT-1- PCB)
Monitored Points (Inputs)	4 monitored points, single EOL, double EOL (Independently programmable)
Reader Outputs	LED and buzzer (25 mA maximum each, open collector outputs)
Auxiliary Outputs	OUT3 and OUT4 (25 mA each, open collector outputs)
KT-1 Controlled Output Relay	2 controlled output relays, 12 VDC, 25 mA each, open collector (optional relay KT-RM1 available)
KT-1-PCB Controlled Output Relay (R1, R2)	2 onboard form C controlled outputs relays, 30 VDC, 3 A max each
Communication Ports	RS-485, Ethernet 10/100Base-T with RJ-45
Expansion Port	RS-485
Auxiliary Port	Auxiliary 12 VDC, 500 mA maximum
Communication Speed	Up to 115,200 baud (automatic detection over RS-485); 10/100Base-T over Ethernet
Flash Memory	256 MB for application and data storage (configuration and events can reside for a minimum of 10 years without power)
RAM	128 MB for application loading and running
Network Autonomy	Distributed data and processing
Regulatory	
EN60839-11-1 Grade 1, EN50130-4:2011, AS-NZS, EN55032, EN60950, FCC, UL, UL-294, UL-1076, IC, NMB-003, RCM, CE	
Warranty	
KT-1 hardware	5 years

Ordering Information

KT-1 Order Information

Model Number	Description
KT-1	Ethernet-ready, one door controller, single gang mount
KT-1-M	Ethernet-ready, one door controller (KT-1-PCB) and metal cabinet (KT-1-CAB-M)
KT-1-PCB	Ethernet-ready, one door controller for metal cabinet mount (Compatible with KT-1-CAB-M, not included)
KT-1-CVR	Black plastic replacement cover, fits KT-1 and KT-1-PCB
KT-1-CAB-M	Black metal cabinet, fits KT-1-PCB (H x W x D) 29.9 x 28.8 x 7.7 cm (11 3/4 x 11 3/8 x 3 in)

KT-1 Starter Kits

Model Number	Security Software	Controller(s)	Reader(s)	Other Items
SK-CE-1-RDR	EntraPass Corporate Edition	KT-1	P225XSF (1)	5 key fobs/credentials (P40KEY)
SK-CE-1M-RDR	EntraPass Corporate Edition	KT-1-M	P225XSF (1)	120V / 16 VAC 40 VA transformer (KT-PTC1640UG), 12 VDC power supply (KT-PS4085), 12V 7 AH battery (KT-BATT-12), 5 key fobs/credentials (P40KEY)
SK-SE-1-RDR	EntraPass Special Edition	KT-1	P225XSF (1)	5 Key fobs/credentials (P40KEY)
SK-SE-1M-RDR	EntraPass Special Edition	KT-1-M	P225XSF (1)	120V / 16 VAC 40 VA transformer (KT-PTC1640UG), 12 VDC power supply (KT-PS4085), 12V 7 AH battery (KT-BATT-12), 5 key fobs/credentials (P40KEY)
SK-CE-1M-SCM	EntraPass Corporate Edition	KT-1-M	KT-MUL-SC (1)	120V / 16 VAC 40 VA transformer (KT-PTC1640UG), 12 VDC power supply (KT-PS4085), 12V 7 AH battery (KT-BATT-12), 5 smart cards (MFP-2KSHL)
SK-SE-1M-SCM	EntraPass Special Edition	KT-1-M	KT-MUL-SC (1)	120V / 16 VAC 40 VA transformer (KT-PTC1640UG), 12 VDC power supply (KT-PS4085), 12V 7 AH battery (KT-BATT-12), 5 smart cards (MFP-2KSHL)

KT-1 Expansion Kits

Model Number	Controller(s)	Reader(s)	Other Items
EK-1-RDR	KT-1	P225XSF (1)	n/a
EK-1M-RDR	KT-1-M	P225XSF (1)	120V / 16 VAC 40 VA transformer (KT-PTC1640UG), 12 VDC power supply (KT-PS4085), 12V 7 AH battery (KT-BATT-12)
EK-1M	KT-1-M	n/a	120V / 16 VAC 40 VA transformer (KT-PTC1640UG), 12 VDC power supply (KT-PS4085), 12V 7 AH battery (KT-BATT-12)
EK-1M-MTM	KT-1-M	KT-MUL-MT (1)	120V / 16 VAC 40 VA transformer (KT-PTC1640UG), 12 VDC power supply (KT-PS4085), 12V 7 AH battery (KT-BATT-12)
EK-1-MTM	KT-1	KT-MUL-MT (1)	n/a
EK-1M-SCM	KT-1-M	KT-MUL-SC (1)	120V / 16 VAC 40 VA transformer (KT-PTC1640UG), 12 VDC power supply (KT-PS4085), 12V 7 AH battery (KT-BATT-12)

About Johnson Controls

Johnson Controls is a global diversified technology and multi-industrial leader serving a wide range of customers in more than 150 countries. Our 120,000 employees create intelligent buildings, efficient energy solutions, integrated infrastructure and next generation transportation systems that work seamlessly together to deliver on the promise of smart cities and communities. Our commitment to sustainability dates back to our roots in 1885, with the invention of the first electric room thermostat.

For additional information, please visit www.kantech.com or follow Kantech on LinkedIn, Twitter and Facebook.

KT0331-DS-201909-R08-HS-EN

KANTECH™
A Tyco International Company

DATA SHEET

Multi-Technology Readers

Single Reader Solution for Multiple Technologies including ioProx

Features That Make a Difference:

- Reads more than 12 different types of proximity cards and contactless smart cards including ioProx with Kantech XSF format[1]
- Uses encryption and custom keys for secure transmission of card data
- Download new functionality or enhancements for a future-proof solution
- Optional keypad for two-factor verification
- Mount on metal with isolation spacer
- Indoor/outdoor use
- Built-in tamper switch provides secure installation
- Plug-in screw terminals reduce installation time
- Configurable Wiegand output
- ISO compliant
- Lifetime warranty

Kantech™ Multi-Technology Readers are one of the industry's most versatile card readers with their ability to read serial numbers from multiple 13.56 MHz smart card technologies, MIFARE® encrypted sectors, and most of the common 125 KHz proximity cards including ioProx with Kantech XSF format – all with one reader. This cost-effective solution enables you to transition from proximity to smart cards over time or to utilize both smart cards and proximity cards concurrently in your facility.

Kantech Multi-Technology Readers are configurable to read encrypted MIFARE® sectors using standard or custom MIFARE read keys. These readers also feature a keypad model which outputs keypad commands and a PIN in 8-bit burst Wiegand data.

Important features such as a built-in tamper switch, two-piece connectors, and isolation spacers help reduce installation time. Coupled with robust environmental ratings and a lifetime warranty, Kantech Multi-Technology Readers are the clear choice for companies looking for a powerful, cost-effective way to use various card technologies.

(1) Reader continuously cycles between 125 KHz and 13.56 MHz and, depending on the frequency cycle when card is presented, the reader will either output the proximity card number or the unencrypted smart card serial number.

Physical

Dimensions
- Model P345MTR ..... 111 x 84 x 28 mm (4.37 x 3.31 x 1.10 in), single-gang
- Model P345KPMTR ..... 111 x 84 x 28 mm (4.37 x 3.31 x 1.10 in), single-gang with keypad

Minimum Wiring ..... Five conductors including one LED control line
Cable Recommendations..... 22 AWG [60 m (200 ft) max] or 18 AWG [150 m (500 ft) max], stranded
Wiring Terminations ..... Plug-in screw terminals
Color ..... Black
Accessories..... European surface mount kit Isolation spacer

Environmental

Environment..... UL listed for interior or exterior
Operating Temperature..... -35° to 67°C (-31º to 151ºF)
Humidity Range ..... 0 to 100%
Index of Protection IP65

Electrical

Power Supply..... 9.4 to 16 VDC 125 mA max @ 12 VDC

Regulatory

Agency Certifications ..... FCC Part 15, CE, UL 294 full outdoor
Compliance ..... ISO 14443A
ISO 14443B
ISO 15693

Operational

Read Range..... Up to 102 mm (4 in) depending on technology of card
Read Time ..... Technology dependent (typically < 300 msec)

Wiring Connector Pinouts

Pin	Description
1	Beeper
2	Ground
3	Power (9.4 to 16 VDC)
4	D1 Wiegand
5	D0 Wiegand
6	Reserved for future use
7	External green LED control
8	External red LED control
9	A – RS485 – used for flash upgrade
10	B – RS485 – used for flash upgrade
11	Tamper (normally closed)
12	Tamper (normally closed)

Programming and Format Information

Card Technologies Supported
ioProx Kantech XSF
HID with Kantech Secured Format (KSF)
HID proximity
CASI® ProxLite®
Deister proximity
ISO 14443A serial number
MIFARE® serial number
DESFire serial number
ISO 14443B serial number
ISO 15693 serial number
iCLASS® serial number
MIFARE sectors

Controller Communications
Wiegand

Configurable Using Program Card
Pass-through[2]
Fixed length[3] (26-bit, 32-bit, 35-bit, 37-bit, 64-bit)
CASI ProxLite 44-bit pass-through
MIFARE sectors
- Select a sector (0-15)
- Customize encryption keys
- Specify data format (number of bits output)
- Enable PIN-on-smart-card functionality

Ordering Information

P345MTR ..... Multi-Technology reader with ioProx support, smart card & proximity, up to 10.2 cm (4 in) read range depending on technology of card, single-gang, black

P345KPMTR..... Multi-Technology reader with ioProx support, integrated keypad, smart card & proximity, up to 10.2 cm (4 in) read range depending on technology of card, single-gang , black

(2) Pass-through – the default setting for Kantech Multi-Technology Readers that allows the reader to send all the data on the card.
(3) Fixed length – the reader can be configured to output a fixed length by padding or truncating data on the card.

www.kantech.com

FISA TEHNICA E-DEMI
Detector efractie montaj interior

Nr Crt.	Specificațiile tehnice impuse prin Caietul de sarcini	Corespondența propunerii tehnice cu specificațiile tehnice impuse prin Caietul de sarcini	Producător
0	1	2	3
1.	**Parametrii tehnici şi funcţionali:** - Material carcasa: ABS plastic UV stabilizat sau metalic - Cu contact magnetic; - Montaj interior; - Sistem adresabil; - Grad de protecție minim IP20; - Temperatura de lucru: -0°C ... +40°C; - Conexiune electrica: terminale cu Șurub; - Distanta detecție: maxim 20 mm; - Contact de alarma: NC/NO, maxim 0,5A - Compatibil cu centrala de efracție;	**Parametrii tehnici şi funcţionali:** - Material carcasa: ABS plastic UV stabilizat sau metalic - Cu contact magnetic; - Montaj interior; - Sistem adresabil; - Grad de protecție minim IP20; - Temperatura de lucru: -0°C ... +40°C; - Conexiune electrica: terminale cu Șurub; - Distanta detecție: maxim 20 mm; - Contact de alarma: NC/NO, maxim 0,5A - Compatibil cu centrala de efracție;	TANE ALARM
2.	**Specificaţii de performanţă şi condiţii privind siguranta în exploatare:** - Monitorizarea pătrunderii persoanelor străine la intrarea prin efracție si declanșare contact releu REED "" - Adresabil compatibil cu centrala de efracție	**Specificaţii de performanţă şi condiţii privind siguranta în exploatare:** - Monitorizarea pătrunderii persoanelor străine la intrarea prin efracție si declanșare contact releu REED "" - Adresabil compatibil cu centrala de efracție	
3.	**Condiţii privind conformitatea cu standarde relevante:** - SR EN 60529 grade de protecție	**Condiţii privind conformitatea cu standarde relevante:** - SR EN 60529 grade de protecție	
4.	**Condiţii de garanţie şi postgaranţie:** - Producătorul va garanta calitatea şi buna funcţionare a produsului timp de 24 luni de la punerea în funcţiune sau de 36 luni de la data livrarii. - Produsul va corespunde normelor tehnice şi standardelor europene.	**Condiţii de garanţie şi postgaranţie:** - Producătorul va garanta calitatea şi buna funcţionare a produsului timp de 24 luni de la punerea în funcţiune sau de 36 luni de la data livrarii. - Produsul va corespunde normelor tehnice şi standardelor europene.	
5.	**Condiţii cu caracter tehnic:** - Nu vor fi luate în consideraţie decât ofertele însoţite de documentaţie completă pentru selecţie şi montaj în limba română. - Vor fi anexate: • instrucţiuni de montaj (scheme de conectare, broşuri, cataloage); • instrucţiuni de exploatare; • buletine de încercări, verificări, probe; • declaratie de conformitate.	**Condiţii cu caracter tehnic:** - Nu vor fi luate în consideraţie decât ofertele însoţite de documentaţie completă pentru selecţie şi montaj în limba română. - Vor fi anexate: • instrucţiuni de montaj (scheme de conectare, broşuri, cataloage); • instrucţiuni de exploatare; • buletine de încercări, verificări, probe; • declaratie de conformitate.	

SM-35

SURFACE MOUNT CONTACTS

2.48"L×.48"W×.51"H Surface Mount Quick Connect-W/Spacers Screws Covers

Contact Size: 2.48"L×.48"W×.51"H

(63mm×12.2mm×13mm)

Standard Magnet Size: 2.48"L×.48"W×.51"H

(63mm×12.2mm×13mm)

Standard Gap: .91"(23mm)

Colors: White, Brown, Gray

Resistors Available: Add "R" to part # and Value

Specifications

Part Number	Gap Inch(mm)	Loop Open/Closed	Reed Form	Max. Contact Rating (W)	Max. Initial Contact Resistance (mΩ)	Max. Switching Voltage (V)	Max. Switching Current (A)
SM-35	.91"(23)	CLOSED	Normally Open	10	100	AC110/DC100	0.5
SM-35B	.75"(19)	OPEN	Normally Closed	3	100	AC30/DC30	0.2
SM-35 WG	1.26"(32)	CLOSED	Normally Open	10	100	AC110/DC100	0.5
SM-35C	.75"(19)	SPDT	SPDT	3	100	AC30/DC30	0.2

OPERATING TEMPERATURE:-40°C to +60°C

Outline Dimensions

Unit: inch(mm)

SM-35/SM-35B/SM-35 WG

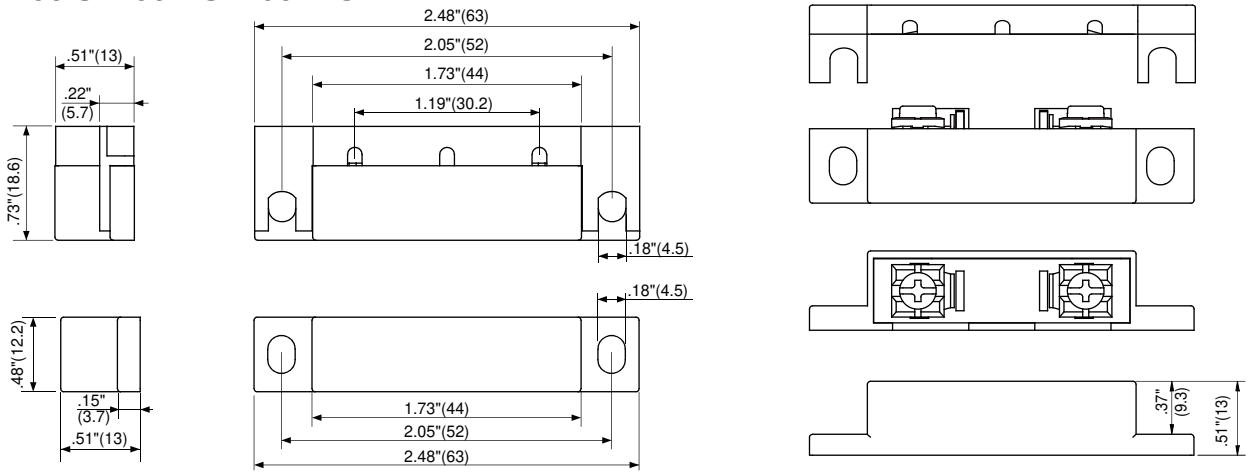

"We Contact The World"®

The Best Guarantee Since 1984 : $50-1

TANE ALARM PRODUCTS

906 JERICHO TURNPIKE, NEW HYDE PARK, NY 11040

Tel: 800-852-5050 • 516-328-3351 • Fax: 516-326-9125

www.tanealarm.com • E-MAIL: info@tanealarm.com

SM-35

SURFACE MOUNT CONTACTS

Outline Dimensions

Unit: inch(mm)

SM-35C

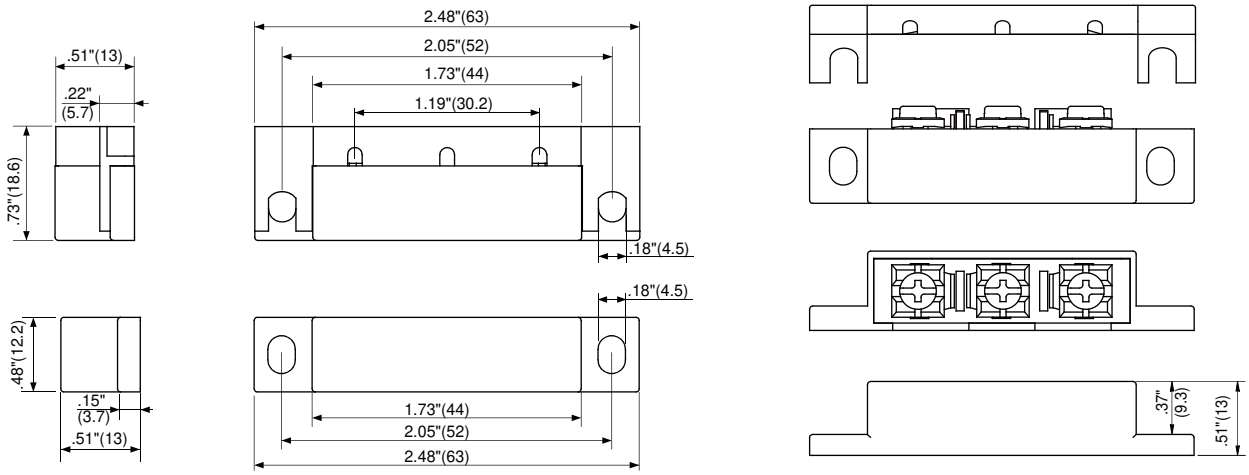

SM-35C Wiring Diagram

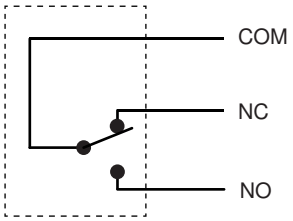

"We Contact The World"®

The Best Guarantee Since 1984 : $50-1

TANE ALARM PRODUCTS

906 JERICHO TURNPIKE, NEW HYDE PARK, NY 11040

Tel: 800-852-5050 • 516-328-3351 • Fax: 516-326-9125

www.tanealarm.com • E-MAIL: info@tanealarm.com

FIȘĂ TEHNICĂ E-DE-E - Detector efracție de exterior

Nr Crt.	Specificațiile tehnice impuse prin Caietul de sarcini	Corespondența propunerii tehnice cu specificațiile tehnice impuse prin Caietul de sarcini	Producător
0	1	2	3
1.	**Parametrii tehnici si funcționali:** - Material carcasa: ABS plastic UV stabilizat sau metalic - Cu contact magnetic; - Montaj exterior; - Sistem adresabil; - Grad de protecție minim IP54; - Conexiune electrica: terminale cu surub; - Distanta detecție: maxim 20 mm; - Contact de alarma: NC/NO, maxim 0,5A - Compatibil cu centrala de efracție;	**Parametrii tehnici si funcționali:** - Material carcasa: ABS plastic UV stabilizat sau metalic - Cu contact magnetic; - Montaj exterior; - Sistem adresabil; - Grad de protecție minim IP54; - Conexiune electrica: terminale cu surub; - Distanta detecție: maxim 20 mm; - Contact de alarma: NC/NO, maxim 0,5A - Compatibil cu centrala de efracție;	**SCHNEI-DER**
2.	**Specificaţii de performanţă şi condiţii privind siguranta în exploatare:** - Monitorizarea pătrunderii persoanelor străine la intrarea prin efracție si declanșare contact releu REED - Adresabil compatibil cu centrala de efracție	**Specificaţii de performanţă şi condiţii privind siguranta în exploatare:** - Monitorizarea pătrunderii persoanelor străine la intrarea prin efracție si declanșare contact releu REED - Adresabil compatibil cu centrala de efracție	
3.	**Condiţii privind conformitatea cu standarde relevante:** - Conform standarde în vigoare din seria SR EN 50130, SR EN 50131; - SR EN 60529 grade de protecţie - Marcare Ex pentru zona 2 cu pericol de explozie;	**Condiţii privind conformitatea cu standarde relevante:** - Conform standarde în vigoare din seria SR EN 50130, SR EN 50131; - SR EN 60529 grade de protecţie - Marcare Ex pentru zona 2 cu pericol de explozie;	
4.	**Condiţii de garanţie şi postgaranţie:** - Producătorul va garanta calitatea şi buna funcţionare a produsului timp de 24 luni de la punerea în funcţiune sau de 36 luni de la data livrarii. - Produsul va corespunde normelor tehnice şi standardelor europene.	**Condiţii de garanţie şi postgaranţie:** - Producătorul garantează calitatea şi buna funcţionare a produsului timp de 24 luni de la punerea în funcţiune sau de 36 luni de la data livrarii. - Produsul va corespunde normelor tehnice şi standardelor europene.	
5.	**Condiţii cu caracter tehnic:** - Nu vor fi luate în consideraţie decât ofertele însoţite de documentaţie completă pentru selecţie şi montaj în limba română. - Vor fi anexate: • instrucţiuni de montaj (scheme de conectare, broşuri, cataloage); • instrucţiuni de exploatare; • buletine de încercări, verificări, probe; • declaratie de conformitate.	**Condiţii cu caracter tehnic:** - Nu vor fi luate în consideraţie decât ofertele însoţite de documentaţie completă pentru selecţie şi montaj în limba română. - Vor fi anexate: • instrucţiuni de montaj (scheme de conectare, broşuri, cataloage); • instrucţiuni de exploatare; • buletine de încercări, verificări, probe; • declaratie de conformitate.	

Fişă tehnică produs

Specificatii

Intr. Electromagn. Codat Xcsdmp - Sil 3 - 1 Ni+1 Nd, Ni Decalate - Cablu 2 M

XCSDMP5912

Principal

Gama de produse	Telemecanique Safety switches XCS
Tip produs sau componenta	Intrerupator magnetic codificat
Nume componenta	XCSDMP
Design	Dreptunghiular, standard
Dimensiune	88 x 25 x 13 mm
Tip si compozitie contacte	1 NC + 1 NO
Operare contacte	Decalat
Material	Plastic
Conexiune electrica	Precablat
Compozitie cablu	4 x 0,25 mm²
Lungime cablu	2 m
Numar de poli	2
Semnalizare locala	1 LED
Directii de apropiere	3 directii
[Ue] tensiune nominala de functionare	24 V c.c.
[Ui] tensiune nominala de izolatie	100 V c.c.

Suplimentar

[Sa] distanta de operare sigura	8 mm
[Sar] distanta de declansare sigura	20 mm
Curent nominal de operare maxim [Ie]	100 mA
[Uimp] tensiune de tinere la impuls	2,5 kV conformitate cu SR EN 60947-5-1
Rezistenta intre terminale	57 Ohm
Protectie la scurtcircuit	500 mA siguranță fuzibilă externă tip gG (gl)
Material contacte	Rodiu
Durabilitate electrica	1200000 cic

Tensiunea maxima de comutatie	100 V c.c.
Capacitatea de comutare in mA	5...100 mA
Rezistenta de izolatie	1000 MΩ
Capacitate de rupere	3 VA
Frecventa de comutare	150 Hz
Nivel de securitate	Poate atinge categoria 4 cu cel mai potrivit sistem de monitorizare și cablat corect conformitate cu EN/ISO 13849-1 Poate ajunge la PL = e cu cel mai potrivit sistem de monitorizare și cablat corect conformitate cu EN/ISO 13849-1 Poate ajunge la SIL 3 cu cel mai potrivit sistem de monitorizare și cablat corect conformitate cu EN/IEC 61508
Fiabilitatea datelor despre securitate	B10d = 50000000 valoare pt. durată de viață 10 ani limitată de uzura mecanică sau a contactelor
Material carcasa	PBT din termoplastic
Material cablu	PVC
Adancime	13 mm
Inaltime	88 mm
Latime	25 mm
Greutate neta	0,18 kg

Mediu

Standarde	UL 60947-1 ISO 14119 SR EN 60947-5-1 EN/IEC 60204-1 CSA C22.2 No 15 EN/ISO 12100
Certificari produs	CSA UL
Tratament protector	TH
Temperatura ambientala de functionare	-25…85 °C
Temperatura de depozitare	-40…85 °C
Rezistenta la vibratii	10 gn (f= 10…150 Hz) conformitate cu IEC 60068-2-6
Rezistenta la socuri	30 gn pentru 11 ms conformitate cu IEC 60068-2-27
Sensibilitate maxima la campurile magnetice	0,3 mT
Clasa de protectie la electrocutare	Clasa II conformitate cu EN/IEC 61140
Grad de protectie IP	IP66 conformitate cu SR EN 60529 IP67 conformitate cu SR EN 60529

Unitati de ambalare

Unitate de masura pentru prima forma de impachetare	PCE
Numar unitati in prima forma de impachetare	1
Inaltime prima forma de impachetare	3,600 cm
Latime prima forma de impachetare	12,700 cm
Lungime prima forma de impachetare	15,900 cm
Greutate prima forma de impachetare	178,000 g

Unitate de masura pentru a doua forma de impachetare	S02
Numar unitati in a doua forma de impachetare	20
Inaltime a doua forma de impachetare	15,000 cm
Latime a doua forma de impachetare	30,000 cm
Lungime a doua forma de impachetare	40,000 cm
Greutate a doua forma de impachetare	3,715 kg

Sustenabilitatea ofertei

Regulamentul REACH	Declaratia REACH
Conform REACh fara SVHC	Da
Directiva RoHS UE	Conformitate proactivă (Produs în afara domeniului de aplicare a EU RoHS) Declaratia RoHS UE
Fara metale grele toxice	Da
Fara mercur	Da
Informatii privind scutirea de la RoHS	Da

Garanţie contractuala

Garantie	18 months

Substitutii recomandate

FIȘĂ TEHNICĂ E-DE-Ex - Detector efracție pentru medii Ex

Nr Crt.	Specificațiile tehnice impuse prin Caietul de sarcini	Corespondența propunerii tehnice cu specificațiile tehnice impuse prin Caietul de sarcini	Producător
0	1	2	3
1.	**Parametrii tehnici si funcționali:** - Material carcasa: ABS plastic UV stabilizat sau metalic - Cu contact magnetic; - Montaj exterior; - Sistem cuplare la centrala efractie prin transponder; - Grad de protecție minim IP55; - Temperatura de lucru: -25° C ... +50° C; - Conexiune electrica: terminale cu surub; - Tipul de protectie: grupa II zona 2, Ex d - Distanta detecție: maxim 20 mm; - Contact de alarma: NC/NO, maxim 0,5A/15Vcc - Compatibil cu centrala de efracție prin transponder;	**Parametrii tehnici si funcționali:** - Material carcasa: ABS plastic UV stabilizat - Cu contact magnetic; - Montaj exterior; - Sistem cuplare la centrala efractie prin transponder; - Grad de protecție: IP66/IP67; - Temperatura de lucru: -25° C ... +85° C; - Conexiune electrica: terminale cu surub; - Tipul de protectie: grupa II zona 2, Ex d, II 2 GD - Ex mb IIC T4 Gb - Distanta detecție: 5-15 mm; - Contact de alarma: NC/NO, maxim 0,5A/15Vcc - Compatibil cu centrala de efracție prin transponder;	**SCHNEIDER**
2.	**Specificaţii de performanţă şi condiţii privind siguranta în exploatare:** - Monitorizarea pătrunderii persoanelor străine la intrarea prin efracție si declanșare contact releu REED - Adresabil compatibil cu centrala de efracție	**Specificaţii de performanţă şi condiţii privind siguranta în exploatare:** - Monitorizarea pătrunderii persoanelor străine la intrarea prin efracție si declanșare contact releu REED - Adresabil compatibil cu centrala de efracție	
3.	**Condiţii privind conformitatea cu standarde relevante:** - SR EN 60679; SR EN 60529 grade de protecție	**Condiţii privind conformitatea cu standarde relevante:** - SR EN 60679; SR EN 60529 grade de protecție	
4.	**Condiţii de garanţie şi postgaranţie:** - Producătorul va garanta calitatea şi buna funcţionare a produsului timp de 24 luni de la punerea în funcţiune sau de 36 luni de la data livrarii. - Produsul va corespunde normelor tehnice şi standardelor europene.	**Condiţii de garanţie şi postgaranţie:** - Producătorul garantează calitatea şi buna funcţionare a produsului timp de 24 luni de la punerea în funcţiune sau de 36 luni de la data livrarii. - Produsul va corespunde normelor tehnice şi standardelor europene.	
5.	**Condiţii cu caracter tehnic:** - Nu vor fi luate în consideraţie decât ofertele însoţite de documentaţie completă pentru selecţie şi montaj în limba română. - Vor fi anexate: • instrucţiuni de montaj (scheme de conectare, broşuri, cataloage); • instrucţiuni de exploatare; • buletine de încercări, verificări, probe; • declaratie de conformitate.	**Condiţii cu caracter tehnic:** - Nu vor fi luate în consideraţie decât ofertele însoţite de documentaţie completă pentru selecţie şi montaj în limba română. - Vor fi anexate: • instrucţiuni de montaj (scheme de conectare, broşuri, cataloage); • instrucţiuni de exploatare; • buletine de încercări, verificări, probe; • declaratie de conformitate.	

INERIS 07ATEX0036
CE

II 2 GD - Ex mb IIC T4 Gb
II 2 HG - Ex tb IIIC IP67 T135 °C / *275 °F* db
II 1 HG - Ex ia IIB T4 Ga
II III 1 HG - Ex ia IIIB T135 °C / *275 °F* Da

Utilizarea acestor dispozitive trebuie să se limiteze exclusiv la funcția comutatoarelor magnetice de siguranță codificate.
Aceste dispozitive trebuie instalate, utilizate și întreținute în conformitate cu:
- Standard **EN/IEC 60204-1** (Siguranța mașinilor - echipamente electrice pentru mașini).
- Standardul **EN/ISO 14119** (Siguranța mașinilor - întrerupătoare de siguranță asociate cu protecțiile).
- Standardul **EN/ISO 13849-1** (Siguranța mașinilor - părți ale sistemelor de control referitoare la siguranță).
- Standard **EN 60079-14** (Atmosfere explozive- Proiectare, selecție și construcție instalații electrice).
- Standardul **EN 60079-17** (Atmosfere explozive - Inspecția și întreținerea instalațiilor electrice).
- reglementări care reglementează configurarea zonei sau zonelor pentru care au fost proiectate dispozitivele.

Nu ne putem asuma nicio responsabilitate pentru nerespectarea acestor reglementări.
Instalarea, operarea și întreținerea dispozitivului trebuie să fie efectuate de personal autorizat și calificat.

Responsabilitate pentru producător Trasabilitatea (serial număr Specificat pe cel Certificare etichetă) e Asigurată la cel prim cunoscut livrare destinație.

Caracteristici

Domeniu de operare		* Sao = 5/*0.20* / Sar = 15/*0.59 (*mm / *in*)
Dispozitive de atac		Față în față, față cu lateral, lateral cu lateral
Tipul de contact		REED
Caracteristici nominale de funcționare		Ue = 60 V c, adică = 100 mA, Pe = 3 VA
Temperatura ambinetală		Funcționare : - 25...+85 °C / *- 13...+185 °F* Depozitare : - 40...+85 °C / *- 40...+185 °F*
Rezistența la vibrații		10 gn (10... 150 Hz) în conformitate cu **IEC 60068-2-6**
Rezistența la șocuri		30 gn (11 ms) în conformitate cu **IEC 60068-2-27**
Protecție împotriva șocurilor electrice		Clasa II conformă cu **EN/IEC 61140**
Gradul de protecție		IP 67
Gradul de poluare		3, conform **EN / IEC 60947-1**
Protecție necesară pentru fuzionarea (din siguranța F1 pentru protecția modulului de siguranță)		F = 500 mA gG (gl) siguranța cartușului (utilizați o siguranță de tip CC recunoscută de UL în Statele Unite). Opțional, în serie csu fiecare contact de comutare.
Acuratețe		≤ 10%
Histerezis		≤ 20%
Frecvența ciclului de funcționare		150 Hz
B_{10d}		50 de milioane de cicluri la 10mA
Drop Out tensiune	**I ±10 mA**	0,1 V
	I ±100 mA	1 V
Comutatoare funcționale		Închidere - Deschidere
Conexiune cablu		Prin cablu 4 x AWG 23 (0.25 mm² / *0.00039 în²*), lungime: 2, 5, 10 și 30 m / *6.6, 16.4, 32.8 și 98.4 ft*

* Sao: Distanța de operare asigurată - Sar: Distanța de eliberare asigurată

XCSDMC●●●EX / XCSZC●●●EX + XCSZC1

Coded magnetic switches
Interrupteurs magnétique codé
Codierte Magnetschalter
Interruptores magnéticos codificados
Interruttori magnetici codificati
Interruptores magnéticos codificados

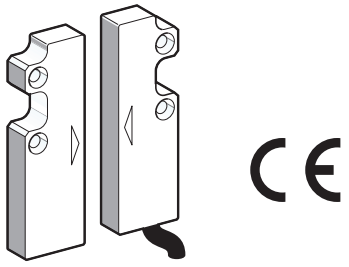

Dimensions / Encombrements / Abmessungen / Dimensiones / Dimensioni / Dimensões

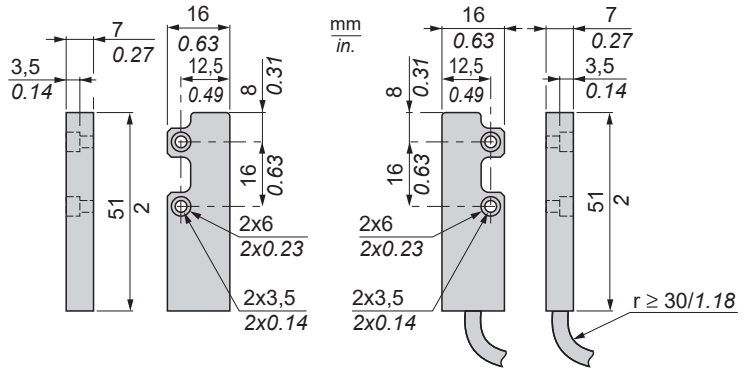

http://qr.tesensors.com/XCS013

Utilization precautions / Précautions de mise en œuvre / Vorsichtsmaßnahmen bei der Inbetriebsetzung / Precauciones de instalación / Precauzioni di messa in servizio / Precauções de utilização

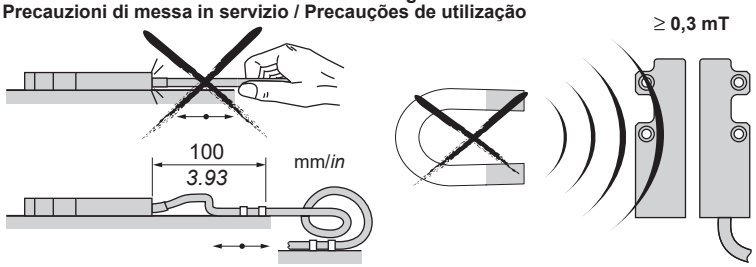

Tightening torque / Couple de serrage / Anzugdrehmoment / Par de apriete / Coppia di serraggio / Binário de aperto

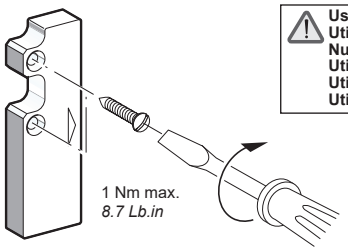

Use non-magnetic screws only
Utiliser uniquement des vis amagnétiques
Nur mit unmagnetischen Schrauben benutzen
Utilizar œnicamente tornillos amagn ticos
Utilizzare unicamente viti non magnetiche
Utilizar exclusivamente parafusos não magnéticos

Adjustment of coded magnetic switches
- The safety switch must not be used as a mechanical stop for your mobile protector, or be adjusted using a hammer
- The safety switch fall during the installation may also lead to switch damage.

Réglage des interrupteurs magnétiques codés
- L'interrupteur de sécurité ne doit pas servir de butée mécanique de votre protecteur mobile, ni être réglé à l'aide d'un marteau.
- La chute de l'interrupteur de sécurité pendant l'installation peut également l'endommager.

Einstellung der codierten Magnetschalter
- Der Sicherheitsschalter darf nicht als mechanischerAnschlag Ihrer mobilen Schutzvorrichtung dienen undnicht mit Hilfe eines Hammers eingestellt werden.
- Wenn der Sicherheitsschalter während der Installation herunterfällt, kann dies ebenfalls zu Schäden am Schalter führen.

Ajuste de los interruptores magnéticos codificados
- El interruptor de seguridad no debe servir de topemecánico de su protector móvil ni ajustarse con unmartillo.
- La caída del interruptor de seguridad durante la instalación también puede provocar daños en el interruptor.

Regolazione degli interruttori magnetici codificati
- L'interruttore di sicurezza non deve fungere da arrestomeccanico al vostro dispositivo di protezione mobile e nondeve essere regolato servendosi di un martello.
- L'interruttore di sicurezza durante l'installazione può anche causare danni agli interruttori.

Regulação dos interruptores magnéticos codificados
- O interruptor de segurança não deverá servir de espera mecânica do seu protector móvel, nem ser regulado coma utilização de um martelo.
- O interruptor de segurança durante a instalação também pode causar danos no interruptor.

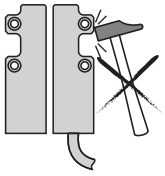

Functional directions - Minimum distance between the magnet and the sensor
Directions fonctionnelles - Distance minimale entre l'aimant et le capteur
Funktions-Richtungen - Mindestabstand zwischen dem Magneten und dem Sensor
Direcciones funcionales - Distancia mínima entre el imán y el sensor
Direzioni funzionali - Distanza minima tra il magnete e il sensore
Direcções funcionais - Distância mínima entre o íman eo sensor

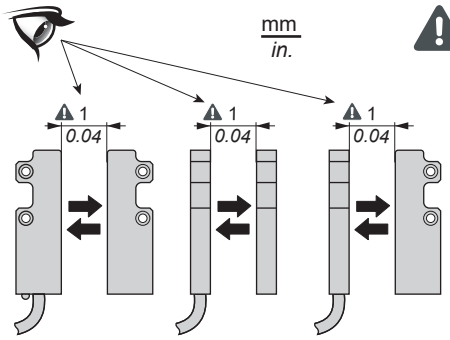

XCS DMC: Sao 4 mmm/*0.16 in.*

Minimum operating distance to be respected:1mm / *0.04 in.*

Distance de fonctionnement minimale à respecter: 1mm.

Minimaler einzuhaltender Arbeitsabstand: 1mm.

Distancia mínima de funcionamiento a respetar: 1 mm.

Distanza operativa minima da rispettare: 1mm.

Distância operacional mínima a ser respeitada: 1mm

Required arrangement with ferromagnetic mounting support
Montage à respecter avec support ferromagnétique
Einzuhaltende Montage mit ferromagnetischem Halter
Montaje que se debe respetar con soporte ferromagnético
Montaggio da rispettare con supporto ferromagnetico
Montagem a respeitar com suporte ferromagnético

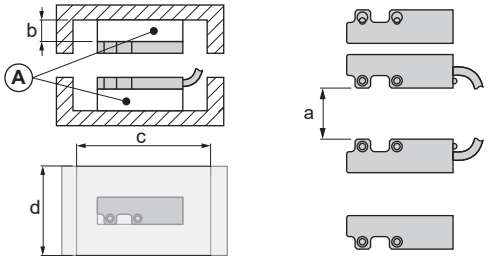

	a ≥	b ≥	c x d ≥
mm / *in.*	40/*1.57*	13/*0.51*	81/*3.19* x 55/*2.16*

A : Non-magnetic shim
Cale amagnétique
Unmagnetischer Keil
Calce amagnético
Spessore amagnetico
Calço não magnético

A = XCSZCC (x2)

Contact status with magnet present / Etat des contacts en présence de l'aimant
Kontaktspiegel bei Magnetbetätigung / Estado de los contactos en presencia del imán
Stato dei contatti in presenza del magnete / Estado dos contactos em presença do ímã

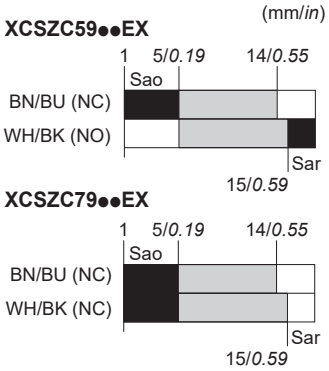

- **Contact closed (1)**
- **Contact fermé (1)**
- **Kontakt geschlossen (1)**
- **Contacto cerrado (1)**
- **Contatto chiuso (1)**
- **Contacto fechado (1)**

- **Contact open (0)**
- **Contact ouvert (0)**
- **Kontakt geöffnet (0)**
- **Contacto abierto (0)**
- **Contatto aperto (0)**
- **Contacto aberto (0)**

- **Transient state**
- **Etat transitoire**
- **Übergangszustand**
- **Estado transitorio**
- **Stato transitorio**
- **Estado transitório**

Sao : Assured Operating Distance / Portée de travail assurée / Gewährleisteter Arbeitsbereich / Alcance de trabajo asegurado / Zona di lavoro garantita / Alcance de trabalho assegurado
Sar : Assured Release Distance / Portée de déclenchement assurée / Gewährleisteter Auslšsebereich / Alcance de activación asegurado / Distanza minima per garantire l'intervento / Alcance de activação assegurado

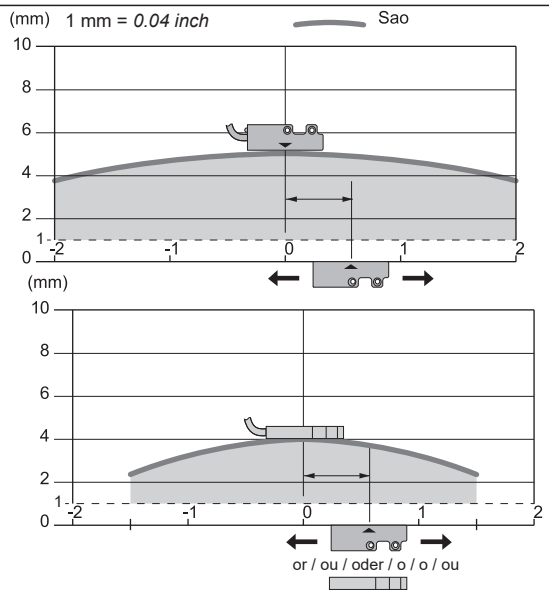

Printed in

Telemecanique Sensors

Wiring diagram / Mise en œuvre électrique / Anschluß Schema / Instalación eléctrica / Collegamenti elettrici / Instalação eléctrica

As per Directive 94/9/CE, Control Safety Units for levels 2 and 3 protection
Selon Directive 94/9/CE, unités de contrôle de sécurité pour niveaux de protection 2 et 3
Gemäß der Richtlinie 94/9/CE, Control Safety Units für die Schutzklassen 2 und 3
Según Directiva 94/9/CE, Unidades de control de seguridad para niveles de protección 2 y 3
Secondo la Direttiva 94/9/CE, Controllo delle unità di sicurezza per livelli di protezione 2 e 3
Segundo a Directiva 94/9/CE, unidades de controle de segurança para nivel de proteccão 2 e 3.

XCSDMC59●●EX

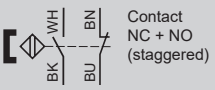

XCSDMC79●●EX

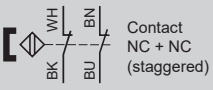

Illustration of contacts with magnet present
Représentation des contacts en présence de l'aimant
Darstellung der Kontakte, bei Magnetbetätigung
Representación de los contactos en presencia del imán
Rappresentazione dei contatti in presenza del magnete
Representação dos contactos em presença do ímã

Cat. 4 / PL=e (EN/ISO 13849-1) / SIL3 - XPSUS
XCSDMC59●●EX
(NC + NO)

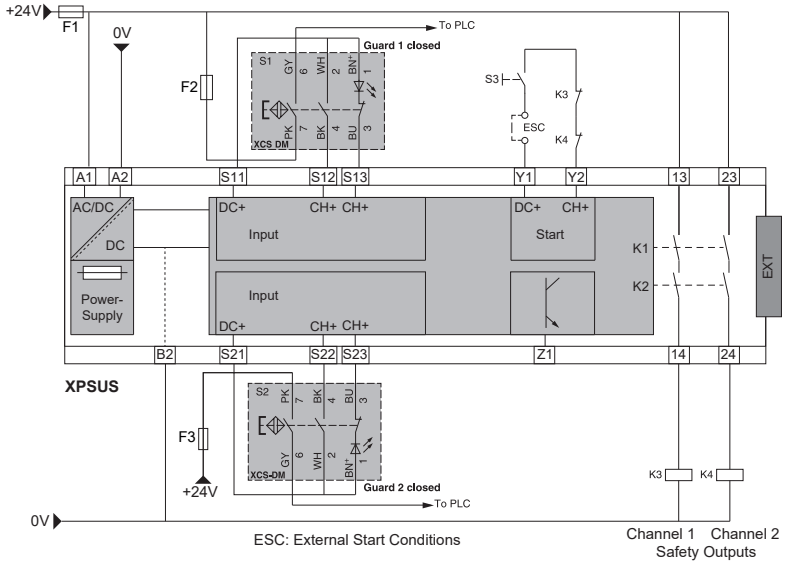

Cat. 3 / PL=d (EN/ISO 13849-1) / SIL2 - XPSUS *(1)*

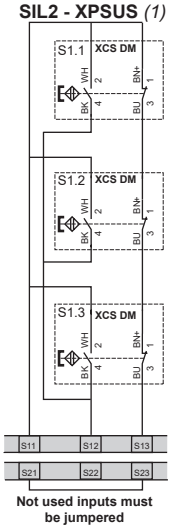

Not used inputs must be jumpered

Cat. 4 / PL=e (EN/ISO 13849-1) / SIL3 - XPSUDN
XCSDMC59●●EX
(NC + NO)

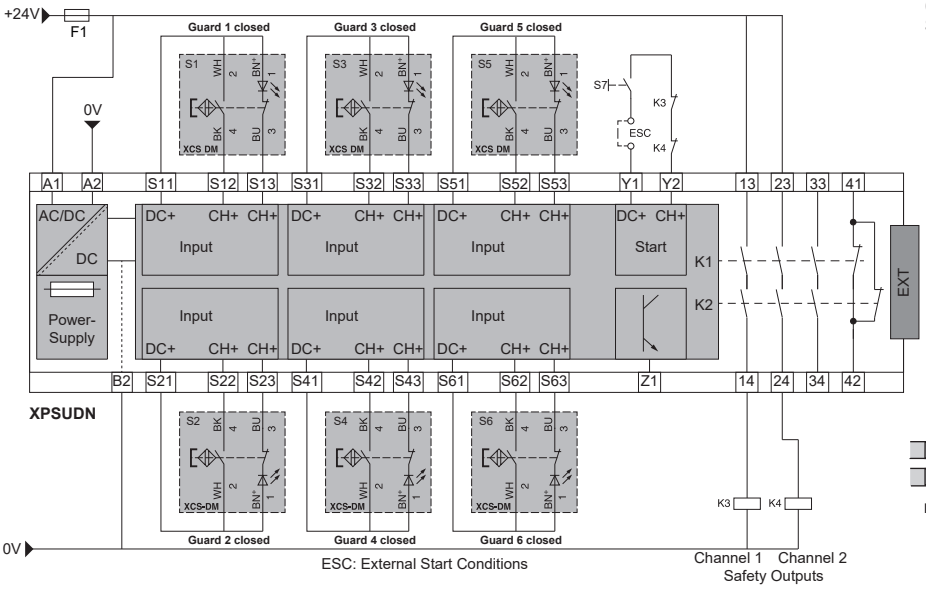

Cat. 3 / PL=d (EN/ISO 13849-1) / SIL2 - XPSUDN *(1)*

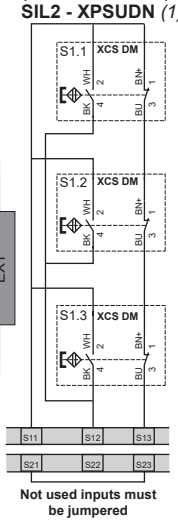

Not used inputs must be jumpered

Cat. 4 / PL=e (EN/ISO 13849-1) / SIL3 - XPSUAF
XCSDMC79●●EX
(NC + NC)

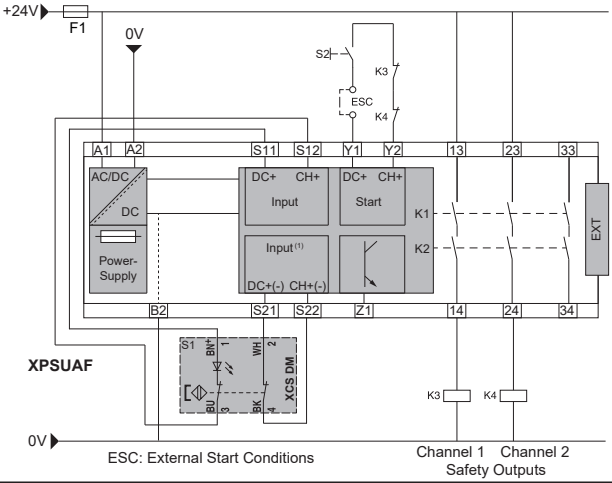

ATEX Zone
Cat. 2 / 3

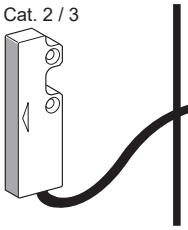

Non ATEX Zone

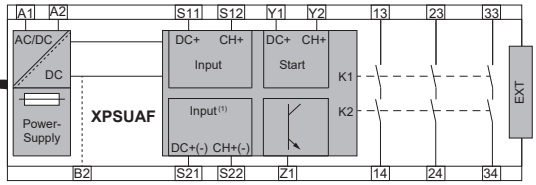

Control Safety Unit

ATEX Zone
Cat. 1

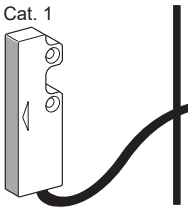

Non ATEX Zone

Intrinsic safety and safety machine monitoring module

⚠ DANGER / DANGER / PELIGRO

HAZARD OF ELECTRIC SHOCK, EXPLOSION OR ARC FLASH

Disconnect all power before servicing equipment.

Failure to follow these instructions will result in death or serious injury.

RISQUE D'ELECTROCUTION, D' EXPLOSION OU D' ARC ELECTRIQUE

Coupez l'alimentation avant de travailler sur cet appareil.

Le non-respect de ces instructions provoquera la mort ou des blessures graves.

RIESGO DE ELECTROCUCIÓN, EXPLOSIÓN O ARCO ELÉCTRICO

Desconecte toda alimentaciónantes de realizar el servicio.

Si no se respetan estas instrucciones, se producirán graves daños corporales o la muerte.

⚠ CAUTION / ATTENTION / PRECAUCIÓN

RISK OF MATERIAL DAMAGE

- Do not connect/disconnect the safety switches when they are powered.
- The safety switches integrate internal non resettable short-circuit protection (fuse resistance). Adding an external fuse (500mA gG) in series with each switch contact can avoid internal protection damage in case of misuse.

Failure to follow these instructions can result in injury or equipment damage.

RISQUE DE DOMMAGES MATERIELS

- Ne connectez / déconnectez pas les interrupteurs de sécurité lorsqu'ils sont alimentés.
- Les interrupteurs de sécurité intègrent une protection interne contre les courts-circuits non réarmable (résistance fusible). L'ajout d'un fusible externe (500mA gG) en série avec chaque contact de l'interrupteur permet d'éviter des dommages de la protection interne en cas de mauvaise utilisation.

Le non-respect de ces instructions peut entraîner des blessures corporelles ou des dommages matériels.

RIESGO DE DAÑOS MATERIALES

- No conecte / desconecte los interruptores de seguridad cuando estén encendidos.
- Los interruptores de seguridad integran protección interna contra cortocircuitos no reiniciable (resistencia fusible). Agregar un fusible externo (500mA gG) en serie con cada contacto del interruptor puede evitar daños en la protección interna en caso de uso incorrecto.

Si no se siguen estas instrucciones, pueden provocarse lesiones o daños en el equipo.

(1):
For more than one XCSDM connected in series, the safety level can even be reduced to PLc (see fault masking restrictions in **ISO/TR 24119***).*

Pour plus d'un XCSDM connecté en série, le niveau de sécurité peut même être réduit à PLc (voir restrictions de masquage des défauts dans **ISO / TR 24119***)*

Para más de un XCSDM conectado en serie, el nivel de seguridad puede incluso reducirse a PLc (consulte las restricciones de enmascaramiento de fallas en **ISO / TR 24119***)*

⚠ WARNING

UNINTENDED EQUIPMENT OPERATION

XCSDMC must be used only in association with a safety control unit. Never use XCSDMC without safety control unit.

Failure to follow these instructions can result in death, serious injury or equipment damage.

Operation

The products have been designed in accordance with the standards in effect: EN/IEC 60204, EN/ISO 14119, EN/ISO 13849-1 to ensure the safety of machine operators and machine operating reliability, EN 60079 to be able to be installed in the classified zones.

⚠ Category 2 and 3 (zones 21 dusts and 1 gas and 22 dusts and 2 gas): the use of the safety modules is **required** for the monitoring of the coded magnetic safety switches.
Category 1 (zone 20 dusts and 0 gas): It is compulsory to use a monitoring module, of certified intrinsic safety-type and machine safety as per the EN/ISO 13849-1 standard.
When correctly installed and connected to the Control Safety Units they produce a category 4 control circuit per EN/ISO 13849-1 (2 redundant contacts monitored by one Control Safety Unit).
- Check that the product's labeling specifications are compatible with the conditions permitted for the Ex zone at the site where it is being used: (**Group II**: Surface industries - **Category 2**: high protection level - **G**: Gas - **D**: Dust - **IPxx**: degree of protection (protection against solids and liquids) - **T135 °C / *275 °F***: max. surface temperature)
- Store products in their original packaging, in a dry place, T: – 40…+85 °C / *– 40…+185 °F.*
- Before startup, check that the product has not been damaged (do not use a device if it is damaged).

Safety functions: The sensor, associated with its coded magnet, allows minimizing incidental manoeuvres; a standard magnet cannot activate the sensor.
Redundancy: Components are redundant. If one part of the sensor is faulty, the redundant circuit keeps working.
Discordance: Associated with a management module that checks discordances of signals from the sensor, the first fault will be detected if the contacts are not activated in a specified order.

Assembly precautions

If the electrical connection is made in the risk zone, ensure that the junction box is certified as compliant with this zone. The device must be assembled in accordance with the operating instructions (position, clearances, etc.)
Serial or parallel wiring of magnetic switches or wiring together with mechanical contacts is strictly prohibited on the same intrinsically safe loop. As the intrinsically safe relay is the interface from which the peak limiting protection conditions are established, it must be installed outside the danger zone or in an Ex enclosure with appropriate protection. The total resistance of the outward and return conductors in the intrinsically safe loop must be less than 50 Ω.

Wiring advice

To obtain better immunity to interference and reduce the size of secondary currents from other circuits, we strongly recommend that you wire each intrinsically safe (IS) channel with 2 conductors contained in the same sheath.
"Control" and "power" cable networks must be kept separate.
Note: where magnetic switches are mounted on a moving machine part, the cable should be fixed to the switch support for approximately 10 cm from the body of the device so that deflection is transferred to an area where the cable is able to bend.

Specific conditions

- Electrical safety parameters:
  - inductance Lint. ≤ 1 µH/m
  - capacity Cint. ≤ 200 pF/m
  - Maximum supply voltage Usupp. = 60 V ⎓
- Specific conditions for safe usage:
  - The equipment must be connected to an intrinsically safe device certified for electrical output characteristics that are compatible with those listed above.

The voltage source connected to the switch must be of a type certified for use in group IIC, IIB or IIA explosive atmospheres, and its output circuit must be certified intrinsically safe.
External circuits connected to the switch must be certified intrinsically safe for use in explosive atmospheres, and their use must be compatible in terms of intrinsic safety.

Servicing and maintenance

The intervals for carrying out servicing and maintenance must be set according to the environment and climatic variations.

- Do not open the devices when on.
- Ensure that the device does not become covered in layers of dust: please vacuum regularly using equipment appropriate to the zone
- The following items must be checked at least once a year or following a lengthy stoppage period:
  - All external parts must be undamaged,
  - The intrinsically safe loop,
  - The useful range,
  - The mechanical condition of the switch and of the connecting devices.

If any of the items checked is defective, it must be replaced immediately. If the devices are used at the limits of the temperature (-25...+85 °C / *-13...+185 °F*) and humidity (50 to 95 %) ranges, check the integrity of the connecting devices at regular intervals.

⚠ AVERTISSEMENT

FONCTIONNEMENT INATTENDU DE L'EQUIPEMENT

XCSDMC ne doit être utilisé qu'en association avec une unité de contrôle de sécurité. Ne jamais utiliser XCSDMC sans unité de contrôle de sécurité.

Le non-respect de ces instructions peut provoquer la mort, des blessures graves ou des dommages matériels.

Mise en service

Les appareils ont été conçus d'après les normes en vigueur : EN/IEC 60204, EN/ISO 14119, EN/ISO 13849-1 afin d'assurer la sécurité des opérateurs machines et la fiabilité de fonctionnement des machines, EN 60079 pour pouvoir être installés dans les zones classées.

⚠ Catégories 2 et 3 (Zones 21 poussières et 1 gaz et 22 poussières et 2 gaz) : l'utilisation des modules de sécurité est **obligatoire** pour la surveillance des interrupteurs de sécurité magnétiques codés.
Catégorie 1 (Zone 20 poussières et 0 gaz) : il faut utiliser un module de surveillance qui soit de sécurité intrinsèque de type certifié et de sécurité machine au titre de la EN/ISO 13849-1.
Correctement installés et raccordés aux unités de contrôle de sécurité, ils permettent d'obtenir un circuit de commande de catégorie 4 selon EN/ISO 13849-1 (2 contacts utilisés en redondance surveillés par une unité de contrôle de sécurité).
- Vérifier que les indications de marquage du produit sont compatibles avec les conditions admissibles pour la zone Ex du site d'utilisation : (**Groupe II** : Industries de surface - **Catégorie 2** : haut niveau de protection - **G** : Gaz - **D** : Poussières - **IPxx** : degré de protection (étanchéité aux solides et aux liquides) - **T135 °C** : température max. de surface).
- Stocker les produits dans leur emballage d'origine, dans un endroit sec, T : – 40…+85 °C.
- Avant la mise en service, vérifier que le produit n'a pas été endommagé (ne pas mettre en service un appareil endommagé).

Fonctions de sécurité : Le capteur, associé à son aimant codé, permet la réduction des possibilités de manoeuvre frauduleuse ; un aimant standard ne peut actionner le détecteur.
Redondance : Les composants sont redondants. Si une partie du capteur présente un défaut, le circuit redondant continue de fonctionner.
Discordance : Associé à un module de gestion qui vérifie la discordance des signaux issus du capteur, le 1er défaut sera signalé si les contacts ne sont pas actionnés dans un ordre bien déterminé.

Précaution de montage

Dans le cas de raccordement électrique effectué dans la zone à risque, s'assurer que la boîte de jonction est certifiée conformément à cette zone. Le montage de l'appareil doit être conforme à l'instruction de service (disposition, écarts …).
Le câblage en série ou parallèle des interrupteurs magnétiques ou en association avec des contacts mécaniques est strictement interdit sur une même boucle de sécurité intrinsèque. Le relais de sécurité intrinsèque étant l'interface à partir duquel les conditions de protection par écrêtage sont réalisées, il doit être installé à l'extérieur de la zone dangereuse ou dans une enceinte Ex ayant le mode de protection adapté. La somme des résistances des conducteurs aller et retour de la boucle de sécurité intrinsèque doit être inférieure à 50 Ω.

Conseil de câblage

Pour obtenir une meilleure immunité aux parasites et minorer l'importance des courants induits par d'autres circuits, il est fortement conseillé de câbler chaque voie de sécurité intrinsèque (SI) à l'aide de 2 conducteurs contenus dans une même gaine.
Les réseaux de câbles « commande » et « puissance » doivent obligatoirement être séparés.
Note : cas des interrupteurs magnétiques montés sur une partie mobile de machine : le câble doit être fixé au support du détecteur sur environ 10 cm à partir du corps de l'appareil, afin que la flexion soit reportée dans une zone où le câble peut se plier.

Conditions spécifiques

- Paramètres électriques relatifs à la sécurité :
  - Inductance Lint. ≤ 1 µH/m
  - Capacité Cint. ≤ 200 pF/m
  - Tension maximale d'alimentation Ualim. = 60 V ⎓
- Conditions spéciales pour une utilisation sûre :
  - le matériel doit être raccordé à un matériel de sécurité intrinsèque d'un type certifié aux caractéristiques électriques de sortie compatibles avec celles indiquées ci-dessus.
  - La source de tension connectée à l'interrupteur doit être d'un type certifié pour une utilisation en atmosphères explosibles des groupes IIC, IIB ou IIA et son circuit de sortie reconnu de sécurité intrinsèque.

Les circuits extérieurs connectés à l'interrupteur doivent être d'un type certifié en sécurité intrinsèque pour une utilisation dans les atmosphères explosibles et leur association doit être compatible du point de vue de la sécurité intrinsèque.

Maintenance et entretien

La périodicité des phases de maintenance et d'entretien doit être définie suivant l'environnement et les variations climatiques.

- Ne pas décâbler les appareils sous tension.
- Eviter toute formation de couche de poussières : effectuer un nettoyage périodique par aspiration avec des moyens appropriés à la zone.
- La vérification des points suivants doit être effectuée au moins une fois par an ou en cas d'arrêt prolongé :
  - l'ensemble des parties externes ne doit pas être endommagé,
  - la boucle de sécurité intrinsèque,
  - la portée utile,
  - l'état mécanique de l'interrupteur et des organes de liaison.

Si l'un des éléments vérifié est défaillant, procéder impérativement à son remplacement. Dans le cas d'un fonctionnement aux limites de température (-25...+85 °C) et d'humidité (50 et 95 % humidité relative), vérifier régulièrement l'étanchéité des organes de connexion.

⚠ WARNUNG

UNBEABSICHTIGTER GERÄTEBETRIEB

XCSDMC darf nur in Verbindung mit einem Sicherheitssteuergerät verwendet werden. Verwenden Sie XCSDMC niemals ohne Sicherheitssteuerung.

Die Nichtbeachtung dieser Anweisungen kann zu Tod, schwerer Körperverletzung oder Materialschäden führen.

Inbetriebnahme

Die Geräte wurden entsprechend den geltenden Normen EN/IEC 60204, EN/ISO14119, EN/ISO 13849-1 konzipiert, um die Sicherheit der Maschinenbediener und die Betriebssicherheit der Maschinen zu gewährleisten, EN 60079 um in den klassifizierten Zonen installiert werden zu können.

⚠ Kategorien 2 und 3 (Zonen 21 Staub und 1 Gas und 22 Staub und 2 Gas) : die Benutzung der Sicherheitsmodule ist für die Überwachung der codierten Magnet-Sicherheitsschalter **zwingend**.
Kategorie 1 (Zone 20 Staub und 0 Gas): es ist ein eigensicheres Überwachungsmodul zu verwenden, das über eine entsprechende zertifizierte Sicherheitslösung verfügt, in Übereinstimmung mit der Maschinensicherheit EN/ISO 13849-1.
Wenn sie korrekt installiert und an die Control Safety Units angeschlossen sind, gestatten sie es, einen Steuerkreis der Kategorie 4 gemäß EN/ISO 13849-1 (2 redundant benutzte Kontakte, die von einem Control Safety Unit überwacht werden).
- Prüfen, ob die Angaben der Produktkennzeichnung mit den für die explosionsgefährdeten Zonen des Einsatzortes gültigen Bedingungen kompatibel sind: (**Gruppe II**: Industrie, kein Bergbau - **Kategorie 2**: hohes Schutzniveau - **G** : Gas - **D**: Stäube - **IPxx**: Schutzart (Dichtigkeit gegenüber festen und flüssigen Stoffen) - **T 135 °C**: max. Oberflächentemperatur).
- Produkte in ihrer Originalverpackung an einem trockenen Ort aufbewahren, T : – 40…+85 °C.
- Vor der Inbetriebnahme überprüfen, ob das Produkt beschädigt ist (nie ein beschädigtes Gerät in Betrieb nehmen).

Sicherheitsfunktionen: Der Schalter schränkt gemeinsam mit seinem codierten Magneten die Möglichkeiten unerlaubter Handlungen weitgehend ein; der Schalter kann durch einen einfachen Magneten nicht vollkommen umgangen werden.
Redundanz: Die Bauteile sind redundant. Wenn in einem Teil des Schalters eine Störung auftritt, funktioniert der redundante Kreis weiter.
Diskordanz: über ein angeschlossenes Steuermodul, das die Ungleichheit der Signale aus dem Schalter überwacht, wird der erste Fehler gemeldet, wenn die Kontakte nicht in einer vorbestimmten Reihenfolge betätigt werden.

Vorsichtsmaßnahmen bei der Montage

Im Falle des elektrischen Anschlusses in einer Gefahrenzone sicherstellen, dass die Anschlussdose dieser Zone entsprechend zertifiziert ist. Der Geräteeinbau muss entsprechend der Angaben in der Kurzanleitung erfolgen (Anordnung, Abstände …).
Die magnetschalter dürfen im gleichen eigensicheren Stromkreis nicht in Reihe oder parallel oder in Verbindung mit mechanischen Kontakten geschaltet werden. Da das eigensichere Relais die Schnittstelle ist, bei der die Schutzbedingungen durch Spitzenbegrenzung realisiert werden, muss dieses außerhalb der Gefahrenzone oder in einem geeigneten Ex-Schutzbehälter installiert werden. Die Summe der Widerstände der Hin- und Rückleiter des eigensicheren Stromkreises muss unter 50 Ω liegen.

Empfehlungen zur Verdrahtung

Um eine höhere Störfestigkeit zu erlangen und die Stärke induktiver Ströme durch andere Schaltungen zu mindern, ist es dringend empfehlenswert, jeden eigensicheren Kanal (SI) mit Hilfe von 2 Leitern zu verdrahten, die im gleichen Kabelmantel enthalten sind.
Die Kabelnetze " Steuerung " und " Leistung " müssen obligatorisch getrennt sein.
Hinweis: Auf einem beweglichen Maschinenteil montierte magnetschalter: Das Kabel muss vom Gerätekörper aus über eine ungefähre Länge von 10 cm an der Halterung des Näherungsschalters befestigt sein, damit die Biegung in einen Bereich übertragen wird, in dem das Kabel gebogen werden kann.

Sonderbedingungen

- Elektrische Einstellwerte bezüglich der Sicherheit:
  • Induktivität Lint. ≤ 1 µH/m
  • Kapazität Cint. ≤ 200 pF/m
  • Maximale Versorgungsspannung Ualim. = 60 V ⎓
- Sonderbedingungen für eine sichere Verwendung:
  • Dieses Gerät ist an einen zertifizierten eigensicheren Materialtyp anzuschließen, dessen elektrische Kenndaten des Ausgangs mit denen der oben genannten kompatibel sind.
  • Die mit dem Schalter verbundene Spannungsquelle muss für eine Verwendung in explosionsgefährdeten Umgebungen der Gruppen IIC, IIB oder IIA zertifiziert sein und seine Ausgangsschaltung eigensicher sein.

Die an den Schalter angeschlossenen externen Leitungen müssen für eine Verwendung in explosionsgefährdeten Umgebungen als eigensicher zertifiziert sein und ihre Belegung muss hinsichtlich der Eigensicherheit kompatibel sein.

Wartung und Instandhaltung

Die Häufigkeit der Wartungs- und Instandhaltungsarbeiten ist entsprechend der Umgebung und der klimatischen Bedingungen festzulegen.
- Geräte nie im eingeschalteten Zustand öffnen.
- Jegliche Bildung von Staubschichten vermeiden: Periodische Reinigungsarbeiten durch Absaugung mit den für diesen Bereich geeigneten Mitteln durchführen.
- Die Überprüfung folgender Punkte ist mindestens einmal pro Jahr oder im Falle eines längeren Stillstands durchzuführen:
  • Alle externen Teile dürfen nicht beschädigt sein,
  • Eigensicherer Stromkreis,
  • Nutzschaltabstand,
  • Mechanischer Zustand des Schalters und der Verbindungsteile.

Wenn eines der geprüften Komponenten ausfällt, ersetzen Sie dieses sofort. Erfolgt der Betrieb in der Höhe der Temperatur- (-25...+85 °C) und Luftfeuchtigkeits-Grenzwerte (50 und 95 % relative Luftfeuchte), ist regelmäßig die Dichtigkeit der Verbindungsteile zu überprüfen.

⚠ ADVERTENCIA

FUNCIONAMIENTO INESPERADO DEL EQUIPO

XCSDMC debe usarse solo en asociación con una unidad de control de seguridad. Nunca use XCSDMC sin la unidad de control de seguridad.

Si no se siguen estas instrucciones pueden producirse lesiones personales graves o mortales o daños en el equipo.

Puesta en servicio

Los aparatos han sido diseñados según las normas envigor : EN/IEC 60204, EN/ISO 14119, EN/ISO 13849-1 conel objetivo de garantizar la seguridad de los operadores máquinas y la fiabilidad de funcionamiento de las máquinas, EN 60079 para poder instalarse en las zonas clasificadas.

⚠ Categorías 2 y 3 (Zonas 21 polvos y 1 gas y 22 polvos y 2 gases) : El uso de los módulos de seguridad es **obligatorio** para la vigilancia de los interruptores magnéticos codificados de seguridad.
Categoría 1 (Zona 20 polvos y 0 gas): es necesario utilizar un módulo de vigilancia que sea de seguridad intrínseca de tipo certificado y seguridad máquina de conformidad con la norma EN/ISO 13849-1.
Correctamente instalados y conectados a las Unidades de control de seguridad, estos interruptores permiten obtener un circuito de mando de categoría 4 según EN/ISO 13849-1 (2 contactos utilizados en redundancia supervisados por una Unidad de Control de Seguridad).
- Compruebe que las indicaciones de las marcas del producto sean compatibles con las condiciones permisibles en el área Ex del lugar de utilización: (**Grupo II**: industrias de superficie - **Categoría 2**: alto nivel de protección - **G** : Gas - **D**: polvo - **IPxx**: grado de protección (estanqueidad de sólidos y líquidos) - **T 135 °C**: temperatura máxima de superficie).
- El producto debe almacenarse en su embalaje original en un lugar seco a una temperatura de – 40…+85 °C.
- Antes de la puesta en servicio, verifique que el producto no esté dañado (no ponga en servicio un aparato dañado).

Funciones de seguridad: El captador, asociado a su imán cifrado, permite la reducción de las posibilidades de maniobra errónea ; un imán normal no puede impulsar el detector.
Redundancia: Los componentes son redundantes. Si una parte del captador presenta un defecto, el circuito redundante sigue funcionando.
Discordancia: Asociado a un módulo de gestión que comprueba la discordancia de las señales resultantes del captador, el 1.o defecto se indicará si los contactos no se impulsan en un orden bien determinado.

Precaución de montaje

En el caso de conexión eléctrica en un área de riesgo, asegúrese de que la caja de unión esté homologada para esa zona. El montaje del aparato debe seguir las instrucciones de servicio (disposición, diferencias, etcétera).
El cableado en serie o paralelo de los interruptores magnéticos o junto con contactos mecánicos está estrictamente prohibido en un mismo bucle de seguridad intrínseca.
Puesto que el relé de seguridad intrínseca es la interfaz a partir de la cual se obtienen las condiciones de protección por limitación, debe instalarse fuera del área peligrosa o en un recinto Ex provisto del modo de protección adaptado. La suma de las resistencias de los conductores de ida y vuelta del bucle de seguridad intrínseca debe ser inferior a 50 Ω.

Consejo de cableado

Para obtener una mejor inmunidad contra los parásitos y disminuir la importancia de las corrientes inducidas por otros circuitos, es muy recomendable cablear cada vía de seguridad intrínseca (SI) con dos conductores en una misma funda.
Las redes de cables de "control" y "potencia" deben estar separadas de forma obligatoria.
Nota: en el caso de interruptores magnéticos montados en una parte móvil de una máquina: el cable debe fijarse en el soporte del detector a unos 10 cm a partir del cuerpo del aparato a fin de llevar la flexión a una zona donde se pueda doblar el cable.

Condiciones específicas

- Parámetros eléctricos relativos a la seguridad:
  • Inductancia Lint. ≤ 1 µH/m
  • Capacidad Cint. ≤ 200 pF/m
  • Tensión máxima de alimentación Ualim. = 60 V ⎓
- Condiciones especiales para una utilización segura:
  • El material debe conectarse con un material de seguridad intrínseca de tipo homologado con características eléctricas de salida compatibles con las que se indican anteriormente.
  • La fuente de tensión conectada al interruptor debe ser de tipo homologado para utilizarla en atmósferas explosivas de los grupos IIC, IIB o IIA y su circuito de salida reconocido de seguridad intrínseca.

Los circuitos exteriores conectados al interruptor deben ser de tipo homologado en seguridad intrínseca para utilizarlos en atmósferas explosivas y su asociación debe ser compatible desde el punto de vista de la seguridad intrínseca.

Mantenimiento

La frecuencia del servicio de mantenimiento debe definirse en función del ambiente y las variaciones climáticas.

- No abra los aparatos mientras reciban tensión.
- Debe evitarse la formación de capas de polvo: aspire el aparato periódicamente con los medios adecuados para el área correspondiente.
- Las siguientes comprobaciones deben realizarse anualmente o en el caso de un paro prolongado del aparato:
  • El conjunto de las piezas externas no debe estar dañado,
  • El bucle de seguridad intrínseca,
  • El alcance útil,
  • El estado mecánico del interruptor y de los componentes de enlace.

Si uno de los elementos verificados es defectuoso, debe sustituirse. En el caso de un funcionamiento con límites de temperatura (-25...+85 °C) y humedad (entre 50 y 95 % de humedad relativa), compruebe regularmente la estanqueidad de los componentes de conexión.

⚠ AVVERTIMENTO

FUNZIONAMENTO NON INTENZIONALE DELL' APPARECCHIATURA

XCSDMC deve essere utilizzato solo in associazione con un'unità di controllo di sicurezza. Non utilizzare mai XCSDMC senza unità di controllo di sicurezza.

Il mancato rispetto di queste istruzioni può provocare morte, gravi infortuni o danni alle apparecchiature.

Avviamento

Gli apparecchi sono stati progettati in base alle norme in vigore: EN/IEC 60204, EN/ISO 14119, EN/ISO 13849-1 allo scopo di garantire la sicurezza degli operatori delle macchine e l'affidabilità di funzionamento di queste ultime, EN 60079 per potere essere installati nelle zone classificate.

⚠ Categorie 2 e 3 (Zone 21 polveri, 1 gas, 22 polveri, 2 gas) : l'utilizzo dei moduli di sicurezza **obbligatorio** per la sorveglianza degli interruttori di sicurezza magnetici codificati.
Categoria 1 (Zona 20 polveri e 0 gas) : si deve utilizzare un modulo di sorveglianza di tipo certificato e predisporre una protezione della macchina a norma EN/ISO 13849-1.
Se correttamente installati e collegati alle Control Safety Unit, producono un circuito di controllo di categoria 4 secondo EN / ISO 13849-1 (2 contatti ridondanti monitorati da una Control Safety Unit).
- Verificare che le indicazioni della marcatura del prodotto siano compatibili con le condizioni ammissibili per la zona Ex del sito di utilizzo: (**Gruppo II** : Industrie di superficie - **Categoria 2** : alto livello di protezione - **G** : Gas - **D** : Polveri - **IPxx** : grado di protezione (tenuta ai solidi e ai liquidi) - **T135 °C** : temperatura max. in superficie).
- Conservare i prodotti nell'imballaggio originale, in un ambiente asciutto, T : – 40…+85 °C.
- Prima dell'avviamento verificare che il prodotto non sia danneggiato (non avviare un dispositivo danneggiato).

Funzioni di sicurezza: Il sensore, associato al magnete codificato, permette la riduzione delle possibilità di manovra fraudolenta; un magnete standard non può azionare il rilevatore.
Ridondanza: I componenti sono ridondanti. Se una parte del sensore presenta un difetto, il circuito ridondante continua a funzionare.
Discordanza: Associato a un modulo di gestione che verifica la discordanza dei segnali provenienti dal sensore, il 1° difetto viene segnalato se i contatti non vengono azionati in un determinato ordine.

Precauzioni per il montaggio

In caso di collegamento elettrico effettuato nella zona a rischio, verificare che la scatola di collegamento sia certificata in conformità alla zona stessa. Il montaggio dell'apparecchio deve essere conforme alle istruzioni di servizio (disposizione, scarti…).
E' severamente vietato il cablaggio in serie o in parallelo dei interruttori magnetici o in associazione con contatti meccanici su uno stesso circuito di sicurezza intrinseco. Il relè di sicurezza intrinseco costituisce l'interfaccia a partire dalla quale si realizzano le condizioni di protezione mediante livellamento, esso deve essere installato all'esterno della zona pericolosa o in un ambiente EX con modalità di protezione adattata. La somma delle resistenze dei conduttori di andata e di ritorno del circuito di sicurezza intrinseco deve essere inferiore a 50 Ω.

Consigli per il cablaggio

Per ottenere una migliore immunità alle scariche e minimizzare l'incidenza delle correnti indotte da altri circuiti, si consiglia vivamente di cablare ogni via di sicurezza intrinseca (SI) con l'ausilio di 2 conduttori contenuti in una stessa guaina.
Le reti dei cavi " comando " e " potenza " devono assolutamente essere separate.
Nota : Caso di interruttori magnetici montati su una parte di macchina mobile : il cavo deve essere fissato al supporto del sensore su circa 10 cm a partire dal corpo dell'apparecchio, in modo che la flessione sia riportata in una zona dove il cavo può piegarsi.

Condizioni specifiche

- Parametri elettrici relativi alla sicurezza :
  - Induttanza Lint. ≤ 1 µH/m
  - Capacità Cint. ≤ 200 pF/m
  - Tensione massima di alimentazione Ualim. = 60 V ⎓
- Condizioni speciali per un utilizzo sicuro :
  - il materiale deve essere collegato a un materiale di sicurezza intrinseco di tipologia certificata alle caratteristiche elettriche di uscita compatibili con quelle sopra indicate;
  - la sorgente di tensione collegata al interruttore deve essere di tipologia certificata per un utilizzo in atmosfere esplosive dei gruppi IIC, IIB o IIA e il suo circuito di uscita deve essere a sicurezza intrinseca.

I circuiti esterni connessi al interruttore devono essere di tipologia certificata a sicurezza intrinseca per un utilizzo in atmosfere esplosive e la loro associazione deve essere compatibile dal punto di vista della sicurezza intrinseca.

Manutenzione

Definire la periodicità delle fasi di manutenzione in base all'ambiente e alle variazioni climatiche.

- Non aprire gli apparecchi sotto tensione.
- Evitare la formazione di strati di polvere: effettuare una pulizia periodica mediante aspirazione con mezzi adatti alla zona.
- Verificare i seguenti punti almeno una volta all'anno o dopo un arresto prolungato:
  - l'insieme delle parti esterne non deve essere danneggiato;
  - il circuito di sicurezza intrinseco;
  - la portata utile;
  - lo stato meccanico del interruttore e degli organi di azionamento.

Se uno degli elementi controllati risulta difettoso, procedere in modo tassativo alla sua sostituzione. In caso di funzionamento ai limiti della temperatura (-25...+85 °C) e dell'umidità (50 e 95 % di umidità relativa), controllare regolarmente la tenuta degli organi di collegamento.

⚠ AVISO

FUNCIONAMENTO NÃO PREVISTO DOS EQUIPAMENTOS

XCSDMC deve ser usado apenas em associação com uma unidade de controle de segurança. Nunca use XCSDMC sem unidade de controle de segurança.

A não observância destas instruções pode provocar a morte, ferimentos graves ou danos no equipamento.

Aposta em serviço

Os aparelhos foram concebidos segundo as normas em vigor: EN/IEC 60204, EN/ISO 14119, EN/ISO 13849-1 a fim de garantir a segurança dos operadores de máquinas e a fiabilidade de funcionamento das máquinas, EN 60079 para poder ser instalados nas zonas classificadas.

⚠ Categorías 2 e 3 (Zonas 21 poeiras e 1 gaz e 22 poeiras e 2 gaz) : a utilização dos módulos de segurança é **obrigatória** para a vigilância dos interruptores de segurança magnéticos codificados.
Categorías1 (Zona 20 poeiras e 0 gaz) : é preciso utilizar um módulo de vigilância, que seja de tipo certificado de segurança intrínseca e de segurança de máquina conforme a norma EN/ISO 13849-1.
Quando instalados e conectados corretamente às unidades de segurança de controle, eles produzem um circuito de controle de categoria 4 por EN / ISO 13849-1 (2 contatos redundantes monitorados por uma unidade de segurança de controle).
- Verificar se as indicações de marcação do produto são compatíveis com as condições admissíveis para a zona Ex do local de utilização: (**Grupo II** : Indústrias de superfície - **Categoria 2** : nível de protecção elevado - **G** : Gaz - **D**: Poeiras - **IPxx**: grau de protecção (estanquidade aos sólidos e aos líquidos) - **T 135 ° C**: temperatura máxima à superfície).
- Armazenar os produtos na embalagem de origem, em local seco, T : – 40…+85 °C.
- Antes de ligar, verificar se o produto não está danificado (não ligar um aparelho danificado).

Funções de segurança : O detector ligado ao seu ímã codificado, permite de reduzir as possibilidades de manobre errada ; um ímã estandar não pode impulsionar o detector.
Redundância : Os componentes são redundantes. No caso de defeito de uma parte do detector, o circuito redundante continua a funcionar.
Disafinacão : Associado com um módulo de gestão que verifica a disafinacão dos sinais resultando do detector, o primeiro defeito será asinalado se os contactos não são impulsionados na ordem determinada.

Precaução durante a montagem

No caso de conexão eléctrica efectuada na zona de risco, verificar se a caixa de junção é certificada para esta zona. A montagem do aparelho deve estar conforme com a instrução de serviço (disposição, desvios, …).
É estritamente proibido a cablagem em série ou em paralelo dos interruptores magnéticos ou em associação com contactos mecânicos num mesmo anel de segurança intrínseca.
Uma vez que o relé de segurança intrínseca é a interface a partir da qual são realizadas as condições de protecção por corte, ele deve ser instalado no exterior da zona de perigo ou num invólucro Ex que tenha o modo de protecção adaptado. O somatório das resistências dos condutores de ida e volta do anel de segurança intrínseca deve ser inferior a 50 Ω.

Recomendação sobre cablagem

Para obter uma melhor imunidade aos parasitas e minorar a importância das correntes induzidas por outros circuitos, é altamente recomendável a cablagem das vias de segurança intrínseca (SI) com a ajuda de 2 condutores contidos na mesma bainha.
Os feixes de cabos de "accionamento" e "potência" devem estar obrigatoriamente separados.
Nota : caso dos interruptores magnéticos montados numa parte móvel da máquina: o cabo deve estar fixo ao suporte do detector 10 cm a partir do corpo do aparelho, de modo que a flexão se dê numa zona em que o cabo se possa dobrar.

Condições específicas

- Parâmetros eléctricos relativos à segurança:
  - Indutância Lint. ≤ 1 µH/m
  - Capacidade Cint. ≤ 200 pF/m
  - Tensão máxima de alimentação Ualim. = 60 V ⎓
- Condições especiais para uma utilização segura:
  - o material deve ser conectado a um material de segurança intrínseca de tipo intrínseco com características eléctricas de saída compatíveis com as indicadas atrás.
  - A origem de tensão conectada ao interruptor deve ser de tipo certificado para utilização em ambientes explosivos dos grupos IIC, IIB ou IIA e o seu circuito de saída reconhecido como de segurança intrínseca.

Os circuitos exteriores conectados ao detector deve ser de tipo certificado em segurança intrínseca para utilização em ambientes explosivos e a sua associação deve ser compatível sob o ponto de vista da segurança intrínseca.

Manutenção

A frequência das acções de manutenção deve ser estabelecida consoante o ambiente e as variações climáticas.

- Não abrir os aparelhos em tensão.
- Evitar a formação de camadas de poeira : efectuar uma limpeza periódica por aspiração com os meios próprios da zona.
- A verificação dos pontos que se seguem deve ser efectuada pelo menos uma vez por ano ou no caso de paragem prolongada:
  - o conjunto das partes externas não deve estar danificado.
  - anel de segurança intrínseca.
  - alcance útil
  - estado mecânico do interruptor e dos órgãos de conexão.

Se um dos elementos verificados estiver defeituoso, é imperativo substitui-lo. Em caso de funcionamento nos limites de temperatura (-25...+85 °C) e de humidade (50 e 95 % de humidade relativa), verificar com regularidade a estanquidade dos órgãos de ligação.

Coded Magnetic Safety Switches
Interrupteurs de sécurité magnétiques codés

EN 60079-0
EN 60079-31

Zones 0 - 1 - 2 / 20 - 21 - 22 *
*** according to the protection mode, mb, tb or ia**
*** suivant mode de protection, mb, tb ou ia**

INERIS 07ATEX0036 Ex
CE

II 2 GD - Ex mb IIC T4 Gb
II 2 GD - Ex tb IIIC IP67 T135 °C / *275 °F* Db
II 1 GD - Ex ia IIB T4 Ga
II 1 GD - Ex ia IIIB T135 °C / *275 °F* Da

Use of these devices must be solely limited to the function of coded magnetic safety switches.
These devices must be installed, used and maintained in accordance with:
- Standard **EN/IEC 60204-1** (Machines safety - machine electrical equipment).
- Standard **EN/ISO 14119** (Machines safety - safety switches associated with protectors).
- Standard **EN/ISO 13849-1** (Machines safety - parts of the control systems relating to safety).
- Standard **EN 60079-14** (Explosive atmospheres- Electrical installations design, selection & construction).
- Standard **EN 60079-17** (Explosive atmospheres- Electrical installations inspection and maintenance).
- regulations governing setup of the zone or zones for which the devices were designed.

We cannot accept any responsibility for failure to observe these regulations.
Device installation, operation and maintenance must be carried out by approved, qualified staff.

⚠ **Liability for manufacturer traceability (serial number specified on the certification label) is ensured at the first known delivery destination.**

Characteristics

Operating range	* Sao = 5/*0.20* / Sar = 15/*0.59* (mm/*in*)
Attack devices	Face to face, face to side, side by side
Type of contact	REED
Rated operating characteristics	Ue = 60 V ⎓, Ie = 100 mA, Pe = 3 VA
Ambient air temperature	Operation : - 25…+85 °C / *- 13…+185 °F* - Storage : - 40…+85 °C / *- 40…+185 °F*
Vibration resistance	10 gn (10…150 Hz) conforming to **IEC 60068-2-6**
Shock resistance	30 gn (11 ms) conforming to **IEC 60068-2-27**
Protection against electric shock	Class II conforming to **EN/IEC 61140**
Degree of protection	IP 67
Degree of pollution	3, conforming to **EN / IEC 60947-1**
Required Fusing Protection (out of F1 fuse for the safety module protection)	F = 500 mA gG (gI) cartridge fuse (use a UL-recognized Type CC fuse in the United States). Optionally, in series with each switch contact.
Repeat acuracy	≤ 10%
Hysteresis	≤ 20%
Frequency of operating cycle	150 Hz
B_{10d}	50 million cycles at 10mA
Drop Out voltage **I ±10 mA**	0,1 V
I ±100 mA	1 V
Functional switches	Closing - Opening
Cable connection	By cable 4 x AWG 23 (0.25 mm^2 / *0.00039 in^2*), length : 2, 5, 10 and 30 m / *6.6, 16.4, 32.8 and 98.4 ft*

* Sao : Assured Operating Distance - Sar : Assured Release Distance

---

L'utilisation de ces appareils doit se limiter à la fonction d'interrupteurs magnétiques de sécurité.
Ces matériels doivent être installés, utilisés et entretenus conformément :
- à la norme **EN/IEC 60204-1** (Sécurité des machines - équipement électrique des machines).
- à la norme **EN/ISO 14119** (Sécurité des machines - Interrupteurs de sécurité associés à des protecteurs).
- à la norme **EN/ISO 13849-1** (Sécurité des machines - Parties des systèmes de commande relatives à la sécurité).
- à la norme **EN 60079-14** (Atmosphères explosives- Conception, sélection et construction des installations électriques).
- à la norme **EN 60079-17** (Atmosphères explosives- Inspection et entretien des installations électriques).
- aux règles de l'art d'installation de la ou les zones pour lesquelles il a été conçu.

Le non-respect de celles-ci ne saurait engager notre responsabilité.
L'installation, la mise en service et la maintenance de ces appareils doivent être réalisées par du personnel qualifié et habilité.

⚠ **La responsabilité de la traçabilité constructeur (numéro de série indiqué sur l'étiquette de certification) est assurée au premier lieu de livraison connu.**

Caractéristiques

Domaine de fonctionnement	* Sao = 5 mm / Sar = 15 mm
Appareils pour attaque	Face à face, face à côte, côte à côte
Type de contact	REED
Caractéristiques assignées d'emploi	Ue = 60 V ⎓, Ie = 100 mA, Pe = 3 VA
Température de l'air ambiant	Pour fonctionnement : - 25…+85 °C - Pour stockage : - 40…+85 °C
Tenue aux vibrations	10 gn (10…150 Hz) selon **IEC 60068-2-6**
Tenue aux chocs	30 gn (durée 11 ms) selon **IEC 60068-2-27**
Protection contre les chocs électriques	Classe II selon **EN/IEC 61140**
Degré de protection	IP 67
Degré de pollution	3, selon **EN / IEC 60947-1**
Protection par fusible nécessaire (hors du fusible F1 pour la protection du module de sécurité)	Cartouche fusible F = 500 mA gG (gI) (aux Etats-Unis, utiliser un fusible de type CC reconnu UL). Optionnellement, en série avec chaque contact de commutation.
Reproductibilité	≤ 10%
Hystèrésis	≤ 20%
Fréquence de commutation	150 Hz
B_{10d}	50 millions de cycles à 10mA
Chute de tension **I ±10 mA**	0,1 V
I ±100 mA	1 V
Fonction de l'élément de commutation	Fermeture - ouverture
Raccordement	Par câble 4 x 0,25 mm^2, longueur 2, 5, 10 et 30 m

* Sao : portée de travail assurée - Sar : portée de déclenchement assurée.

Codierte Magnet-Sicherheitsschalter
Interruptores magnéticos codificados de seguridad

EN 60079-0
EN 60079-31

Zones 0 - 1 - 2 / 20 - 21 - 22 *
*** gemäß dem Schutzmodus, mb, tb oder ia**
*** según método de protección, mb, tb o ia**

INERIS 07ATEX0036 Ex
CE

II 2 GD - Ex mb IIC T4 Gb
II 2 GD - Ex tb IIIC IP67 T135 °C Db
II 1 GD - Ex ia IIB T4 Ga
II 1 GD - Ex ia IIIB T135 °C Da

Die Verwendung dieser Geräte soll sich auf die Funktion der codierten Magnet-Sicherheitsschalter beschränken.
Das Material ist gemäß folgender Normen und Richtlinien zu installieren, einzusetzen und zu warten:
- Norm **EN/IEC 60204-1** (Maschinensicherheit - Elektrische Ausrüstung von Maschinen).
- Norm **EN/ISO 14119** (Maschinensicherheit - Verriegelungseinrichtungen mit trennenden Schutzeinrichtungen).
- Norm **EN/ISO 13849-1** (Maschinensicherheit - Sicherheitsbezogene Teile von Steuerungen).
- Norm **EN 60079-14** (Explosionsfähige Atmosphäre - Projektierung, Auswahl und Errichtung elektrischer Anlagen).
- Norm **EN 60079-17** (Explosionsfähige Atmosphäre - Prüfung und Instandhaltung elektrischer Anlagen).
- Dem Stand der Technik entsprechenden Installationsrichtlinien der Bereiche, für die sie konzipiert wurden.

Bei Nichteinhaltung dieser Vorschriften übernehmen wir keine Verantwortung.
Die Installation, Inbetriebnahme und Wartung dieses Geräts muss von qualifiziertem und kompetentem Personal durchgeführt werden.

⚠ **Die Verantwortlichkeit der Hersteller-Rückverfolgbarkeit (Seriennummer auf dem Zertifikats-Etikett) ist für den ersten bekannten Lieferort gewährleistet.**

Technische Daten

Funktionsbereich		* Sao = 5 mm / Sar = 15 mm
Betätigung		Frontfläche zu Frontfläche, Frontfläche zu Seitenfläche, Seitenfläche zu Seitenfläche
Kontakttyp		REED
Nennbetriebsdaten		Ue = 60 V ⎓, Ie = 100 mA, Pe = 3 VA
Umgebungstemperatur		Betrieb: - 25…+85 °C - Lagerung: - 40…+85 °C
Vibrationsfestigkeit		10 gn (10…150 Hz) gemäß **IEC 60068-2-6**
Schockfestigkeit		30 gn (11 ms) gemäß **IEC 60068-2-27**
Schutz gegen Spannungstöße		Klasse II gemäß **EN/IEC 61140**
Schutzart		IP 67
Verschmutzungsgrad		3, gemäß **EN / IEC 60947-1**
Erforderlicher Sicherungsschutz (außerhalb der F1-Sicherung für den Schutz des Sicherheitsmoduls)		Sicherung F = 500 mA gG (gl) (verwenden Sie eine UL-konforme CC-Sicherung in den Vereinigten Staaten). Wahlweise, in Reihe mit jedem Schaltkontakt.
Schaltgenauigkeit		≤ 10%
Hysterese		≤ 20%
Schaltfrequenz		150 Hz
B_{10d}		50 Millionen Zyklen bei 10mA
Spannungsabfall	**I ±10 mA**	0,1 V
	I ±100 mA	1 V
Schaltfunktion		Öffnen - Schließen
Elektrischer Anschluß		Durch Kabel 4 x 0,25 mm^2, Länge 2, 5, 10 und 30 m

* Sao: Gewährleisteter Arbeitsbereich - Sar: gewährleisteter Auslösebereich

---

La utilización de estos aparatos debe limitarse a la función de interruptor magnético codificado de seguridad.
Estos materiales deben instalarse, utilizarse y mantenerse conforme a:
- La norma **EN/IEC 60204-1** (Seguridad de las máquinas - équipamiento eléctrico de las máquinas).
- La norma **EN/ISO 14119** (Seguridad de las máquinas - Interruptores de seguridad asociados a protectores).
- La norma **EN/ISO 13849-1** (Seguridad de las máquinas - Partes de los sistemas de control relativas a la seguridad).
- La norma **EN 60079-14** (Atmósferas explosivas - concepción, selección y construcción de las instalaciones eléctricas).
- La norma **EN 60079-17** (Atmósferas explosivas - Inspección y mantenimiento de las instalaciones eléctricas).
- Las reglas para la instalación aplicables al área o áreas para las que haya estado concebido.

No nos hacemos responsables de la inobservancia de las normas anteriores.
La instalación, la puesta en servicio y el mantenimiento de estos aparatos deben llevarse a cabo por personal cualificado y autorizado.

⚠ **La responsabilidad del seguimiento desde el origen del constructor (número de serie indicado en la etiqueta de certificación) se garantiza en el primer lugar de entrega conocido.**

Características

Ámbito de funcionamiento		* Sao = 5 mm / Sar = 15 mm
Aparatos para ataque		frente a frente, frente a codo, codo a codo
Tipo de contacto		REED
Características de uso		Ue = 60 V ⎓, Ie = 100 mA, Pe = 3 VA
Temperaturas ambiente		Para funcionamiento: - 25…+85 °C - Para almacenamiento: - 40…+85 °C
Resistencia a las vibraciones		10 gn (10…150 Hz) según **IEC 60068-2-6**
Resistencia a los impactos		30 gn (duración 11 ms) según **IEC 60068-2-27**
Protección contra las descargas eléctricas		Clase II según **EN/IEC 61140**
Grado de protección		IP 67
Grado de contaminación		3, según **EN / IEC 60947-1**
Se requiere una protección por fusible (Fuera del fusible F1 para la protección del módulo de seguridad.)		Cartucho fusible F = 500 mA gG (gl) (en los EEUU, utilizar un fusible de tipo CC aprobado UL). Opcionalmente, en serie con cada contacto de interruptor.
Reproductibilidad		≤ 10%
Histéresis		≤ 20%
Frecuencia de conmutación		150 Hz
B_{10d}		50 millones de ciclos en 10mA
Caída de tensió	**I ±10 mA**	0,1 V
	I ±100 mA	1 V
Función del elemento de conmutación		Cierre – abertura
Conexión		Por cable 4 x 0,25 mm^2, longitud 2, 5, 10 y 30 m

* Sao: Alcance de trabajo asegurado - Sar: alcance de activación asegurada

Interruttori di sicurezza magnetici codificati
Interruptores de segurança magnéticos codificados

EN 60079-0
EN 60079-31

Zones 0 - 1 - 2 / 20 - 21 - 22 *
*** a seconda della modalità di protezione, mb, tb o ia**
*** Segundo o modo de proteccão , mb, tb ou ia**

INERIS 07ATEX0036 CE

II 2 GD - Ex mb IIC T4 Gb
II 2 GD - Ex tb IIIC IP67 T135 °C Db
II 1 GD - Ex ia IIB T4 Ga
II 1 GD - Ex ia IIIB T135 °C Da

Limitare l'impiego di questi apparecchi alla funzione d'interruttori di sicurezza magnetici codificati.
Installare, utilizzare ed eseguire la manutenzione di questi materiali in conformità a:
- norma **EN/IEC 60204-1** (Sicurezza delle macchine - Dotazione elettrica delle macchine).
- norma **EN/ISO 14119** (Sicurezza delle macchine - Interruttori di sicurezza associati a dispositivi di protezione).
- norma **EN/ISO 13849-1** (Sicurezza delle macchine - Parti dei sistemi di comando inerenti alla sicurezza).
- norma **EN 60079-14** (Atmosfere esplosive - concezione, selezione e costruzione degli impianti elettrici).
- norma **EN 60079-17** (Atmosfere esplosive - Ispettorato e intervista degli impianti elettrici).
- regole tecniche relative all'installazione della(e) zona(e) per le quali è stato progettato.

L'inosservanza di quanto sopra solleva il costruttore da ogni responsabilità.
Affidare a personale qualificato e abilitato l'installazione, l'avviamento e la manutenzione di questi apparecchi.

⚠ **Si assicura la rintracciabilità del costruttore (numero di serie indicato sull'etichetta di certificazione) al primo luogo di consegna noto.**

Caratteristiche

Campo di funzionamento		* Sao = 5 mm / Sar = 15 mm
Apparecchi per attacco		faccia-faccia, faccia-lato, lato-lato
Tipo di contatto		REED
Caratteristiche nominali d'impiego		Ue = 60 V ⎓, Ie = 100 mA, Pe = 3 VA
Temperatura ambiente		Funzionamento: - 25…+85 °C - Stoccaggio: - 40…+85 °C
Tenuta alle vibrazioni		10 gn (10…150 Hz) secondo **IEC 60068-2-6**
Tenuta agli urti		30 gn (durata 11 ms) secondo **IEC 60068-2-27**
Protezione contro gli choc elettrici		Classe II secondo **EN/IEC 61140**
Grado di protezione		IP 67
Grado d'inquinamento		3, secondo **EN / IEC 60947-1**
Protezione con fusibili richiesta (fuori dal fusibile F1 per la protezione del modulo di sicurezza)		Fusibile F = 500 mA gG (gI) (usare un fusibile di tipo CC UL negli Stati Uniti). Opzionalmente, in serie con ogni contatto di commutazione.
Ripetibilità		≤ 10%
Isteresi		≤ 20%
Frequenza di commutazione		150 Hz
B_{10d}		50 milioni di cicli a 10mA
Calo di tensione	**I ±10 mA**	0,1 V
	I ±100 mA	1 V
Funzione dell'elemento di commutazione		Chiusura - apertura
Collegamento		Per cavo 4 x 0,25 mm², lunghezza 2, 5, 10 e 30 m

* Sao: zona di lavoro garantita - Sar: distanza minima per garantire l'intervento

---

A utilização destes aparelhos deve limitar-se à função de interruptor de segurança magnético codificado.
Estes materiais devem ser instalados, utilizados e sujeitos a manutenção, em conformidade com:
- a norma **EN/IEC 60204-1** (Segurança das máquinas - equipamentos eléctricos das máquinas).
- a norma **EN/ISO 14119** (Segurança das máquinas- Interruptores de segurança associados com protectores).
- a norma **EN/ISO 13849-1** (Segurança das máquinas- Partes dos sistemas de comando relativas a segurança).
- a norma **EN 60079-14** (Atmosferas explosivas - concepção, selecção e construção das instalações eléctricas).
- a norma **EN 60079-17** (Atmosferas explosivas - Inspecção e entrevista das instalações eléctricas).
- as regras da arte de instalação da ou das zonas para as quais foi concebido.

O não respeito pelas mesmas não implica a nossa responsabilidade.
A instalação, ligação e manutenção destes aparelhos devem ser realizadas por pessoal qualificado e habilitado.

⚠ **A responsabilidade da rastreabilidade do fabricante (número de série indicada na etiqueta de certificação) é garantida no primeiro local de entrega conhecido.**

Características

Domínio de funcionamento		* Sao = 5 mm / Sar = 15 mm
Aparelhos de ataque		Frente a frente, frente a lado, lado a lado
Tipo de contacto		REED
Características estipuladas de emprego		Ue = 60 V ⎓, Ie = 100 mA, Pe = 3 VA
Temperatura ambiente		Funcionamento: - 25…+85 °C - Armazenagem: - 40…+85 °C
Comportamento às vibrações		10 gn (10…150 Hz) segundo **IEC 60068-2-6**
Comportamento aos choques		30 gn (duração 11 ms) segundo **IEC 60068-2-27**
Protecção contra os choques eléctricos		Classe II segundo **EN/IEC 61140**
Grau de protecção		IP 67
Grau de poluição		3, segundo **EN / IEC 60947-1**
Protecção de Fusíveis Necessária (fora do fusível F1 para a proteção do módulo de segurança)		Cartucho fusível F = 500 mA gG (gI) (utilize um fusível de Tipo CC, reconhecido pela UL, nos Estados Unidos). Opcionalmente, em série com cada contato do comutador.
Reprodutibilidade		≤ 10%
Histeresis		≤ 20%
Frequência de comutação		150 Hz
B_{10d}		50 milhões de ciclos de 10mA
Queda de tensão	**I ±10 mA**	0,1 V
	I ±100 mA	1 V
Função do elemento de comutação		Fecho - abertura
Ligações		Por cabo 4 x 0,25 mm², comprimento 2, 5, 10 e 30 m

* Sao: alcance de trabalho assegurado - Sar: alcance de activação assegurado

Lorem ipsum dolor sit amet, consectetuer

Product data sheet

Specifications

Coded magnetic switch, Telemecanique Safety switches XCS, XCSDMC, 1 NC+1 NO, staggered, cable 2 m

XCSDMC5902EX

Main

Range of product	Telemecanique Safety switches XCS
Product or component type	Coded magnetic switch
Device short name	XCSDMC
Material	Plastic
Contacts type and composition	1 NC + 1 NO
Contact operation	Staggered
Electrical connection	Pre-cabled
Cable composition	4 x 0.25 mm²
Cable length	2 m
Design	Rectangular, compact
Size	51 x 16 x 7 mm
Number of poles	2

Complementary

[Sa] assured operating distance	5 mm
[Sar] assured tripping distance	15 mm
Approach directions	3 directions
[Ue] rated operational voltage	24 V DC
Maximum [Ie] rated operational current	100 mA
[Ui] rated insulation voltage	100 V DC
[Uimp] rated impulse withstand voltage	2.5 kV conforming to EN/IEC 60947-5-1
Resistance across terminals	10 Ohm
Short-circuit protection	500 mA external cartridge fuse type gG (gl)
Contacts material	Rhodium
Electrical durability	1200000 cycles
Maximum switching voltage	100 V DC
Switching capacity in mA	0.1...100 mA
Insulation resistance	1000 MOhm

Breaking capacity	10 VA
Switching frequency	150 Hz
Net weight	0.101 kg

Environment

Safety level	Can reach category 4 with the appropriate monitoring system and correctly wired conforming to EN/ISO 13849-1 Can reach PL = e with the appropriate monitoring system and correctly wired conforming to EN/ISO 13849-1 Can reach SIL 3 with the appropriate monitoring system and correctly wired conforming to IEC 61508
Safety reliability data	B10d = 50000000 value given for a life time of 20 years limited by mechanical or contact wear
Protective treatment	TH
Ambient air temperature for operation	-25…85 °C
Ambient air temperature for storage	-40…85 °C
Vibration resistance	10 gn (f= 10…150 Hz) conforming to IEC 60068-2-6
Shock resistance	30 gn for 11 ms conforming to IEC 60068-2-27
Maximum sensitivity to magnetic fields	0.3 mT
Electrical shock protection class	Class II conforming to IEC 60536
IP degree of protection	IP66 conforming to IEC 60529 IP67 conforming to IEC 60529
Enclosure material	Thermoplastic PBT
Cable material	PVC
Dust zone	Zone 0 - 1 - 2/20 - 21 - 22 According to protection mode mD, tD and ia
Product certifications	INERIS 07ATEX0036
Standards	EN 60079-0 EN 60079-11 EN 60079-18 EN 60079-31 EN/ISO 13849-1
Directives	2014/34/EU - ATEX directive

Packing Units

Unit Type of Package 1	PCE
Number of Units in Package 1	1
Package 1 Height	2.0 cm
Package 1 Width	14.0 cm
Package 1 Length	14.0 cm
Package 1 Weight	117.0 g
Unit Type of Package 2	S02
Number of Units in Package 2	20
Package 2 Height	15.0 cm
Package 2 Width	30.0 cm
Package 2 Length	40.0 cm
Package 2 Weight	2.624 kg

Offer Sustainability

REACh Regulation	REACh Declaration
REACh free of SVHC	Yes
EU RoHS Directive	Pro-active compliance (Product out of EU RoHS legal scope) EU RoHS Declaration
Toxic heavy metal free	Yes
Mercury free	Yes
RoHS exemption information	Yes
California proposition 65	WARNING: This product can expose you to chemicals including: Diisononyl phthalate (DINP), which is known to the State of California to cause cancer, and Di-isodecyl phthalate (DIDP), which is known to the State of California to cause birth defects or other reproductive harm. For more information go to www.P65Warnings.ca.gov

Contractual warranty

Warranty	18 months

Recommended replacement(s)

FISA TEHNICA E-SE - Modul industrial de avertizare cu flash pentru efractie

Nr Crt.	Specificațiile tehnice impuse prin Caietul de sarcini	Corespondența propunerii tehnice cu specificațiile tehnice impuse prin Caietul de sarcini	Producător
0	1	2	3
1.	**Parametrii tehnici şi funcţionali:** - Montaj exterior; - Carcasa dubla poli carbonat + metal; - Material carcasa ABS plastic UV stabilizat - Grad de protecție min. IP 54; - Putere acustica: minim 90 dB la 1m; - Semnal luminos: flash galben; - Lampa Flash High Bright LED; - Autotestare periodica cu raportare status; - Tamper anti sabotaj; - Auto protecție contra tăierii firelor si a sabotajului; - Timp de alarmare programabil (3, 5 sau 10 minute); - Sunet sirena programabil (sabotaj sunet diferit); - Ieșire suplimentara pentru semnalizare defect; - Compatibil cu centrala de semnalizare a efracție.	**Parametrii tehnici şi funcţionali:** - Montaj exterior; - Carcasa dubla poli carbonat + metal; - Material carcasa ABS plastic UV stabilizat - Grad de protecție: IP 54; - Putere acustica: 110 dB la 1m; - Semnal luminos: flash galben; - Lampa Flash High Bright LED; - Autotestare periodica cu raportare status; - Tamper anti sabotaj; - Auto protecție contra tăierii firelor si a sabotajului; - Timp de alarmare programabil (3, 5 sau 10 minute); - Sunet sirena programabil (sabotaj sunet diferit); - Ieșire suplimentara pentru semnalizare defect; - Compatibil cu centrala de semnalizare a efracție.	**AMC**
2.	**Specificaţii de performanţă şi condiţii privind siguranta în exploatare:** - Conform caiet de sarcini	**Specificaţii de performanţă şi condiţii privind siguranta în exploatare:** - Conform caiet de sarcini	
3.	**Condiţii privind conformitatea cu standarde relevante:** - SR EN 50131; SR EN 60529	**Condiţii privind conformitatea cu standarde relevante:** - SR EN 50131; SR EN 60529	
4.	**Condiţii de garanţie şi postgaranţie:** - Producătorul va garanta calitatea şi buna funcţionare a produsului timp de 24 luni de la punerea în funcţiune sau de 36 luni de la data livrarii. - Produsul va corespunde normelor tehnice şi standardelor europene.	**Condiţii de garanţie şi postgaranţie:** - Producătorul garantează calitatea şi buna funcţionare a produsului timp de 24 luni de la punerea în funcţiune sau de 36 luni de la data livrarii. - Produsul va corespunde normelor tehnice şi standardelor europene.	
5.	**Condiţii cu caracter tehnic:** - Nu vor fi luate în consideraţie decât ofertele însoţite de documentaţie completă pentru selecţie şi montaj în limba română. - Vor fi anexate: • instrucţiuni de montaj (scheme de conectare, broşuri, cataloage); • instrucţiuni de exploatare; • buletine de încercări, verificări, probe; • declaratie de conformitate.	**Condiţii cu caracter tehnic:** - Nu vor fi luate în consideraţie decât ofertele însoţite de documentaţie completă pentru selecţie şi montaj în limba română. - Vor fi anexate: • instrucţiuni de montaj (scheme de conectare, broşuri, cataloage); • instrucţiuni de exploatare; • buletine de încercări, verificări, probe; • declaratie de conformitate.	

COMPLIANT
CEI EN 50131-4:2010-08

SR136

SELF-POWERED SIREN FOR EXTERNAL

TECHNICAL MANUAL

ENGLISH DESCRIPTION

SR136 is a self-powered siren for external that meets the various installation requirements.
Besides the possibility to select different sounds and activation ways, SR136 is able to report the system status (armed / disarmed), the alarm memory, the power anomalies.
All siren functions are handled by the microcontroller, so the programming is easy and intuitive.
All functions are selectable via DIP-SWITCH (there are 2 sets of dip switches, MODE and FUNCTIONS).
The siren is protected against accidental activation, in fact every time you change the configuration the siren emits a sound indicating that the system is ready. In the case of 2-wires configuration is necessary to give 2 times the launch voltage.
NOTE: pay attention to the setup confirmation sound, which is emitted from the speaker.

LIST OF ACTIVATION MODES (DIP MODE)

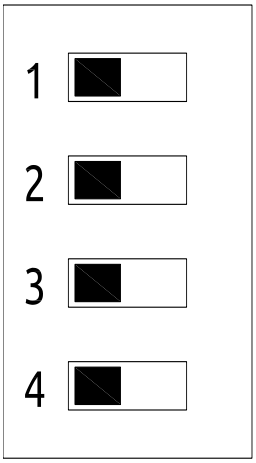

SR136 has the following modes of activation:

- start trigger: S TERMINAL
positive missing = **dip 1 OFF**
negative missing = **dip 1 ON**

- system status trigger ARMED: A TERMINAL
trigger on A terminal with Negative = **dip 2 OFF**
trigger on A terminal with Positive = **dip 2 ON**

- lamp and speaker separated triggers:
unique trigger (speaker and lamp on S terminal) = **dip 3 OFF**
speaker on A terminal and lamp on S terminal = **dip 3 ON**

- 2-wires function:
traditional (2 power supply wires, 1 wire for alarm trigger) = **dip 4 OFF**
2 power supply wires with starting immediately = **dip 4 ON**

note 1: the polarity for separated triggers is always controlled by dip 1 and dip 2
note 2: the starting of 2-wires function takes place after the second activation

FUNCTIONS LIST (DIP FUNCTIONS)

SR136 has the following functions that can be activated INDIVIDUALLY **BRINGING ON the corresponding dip**:

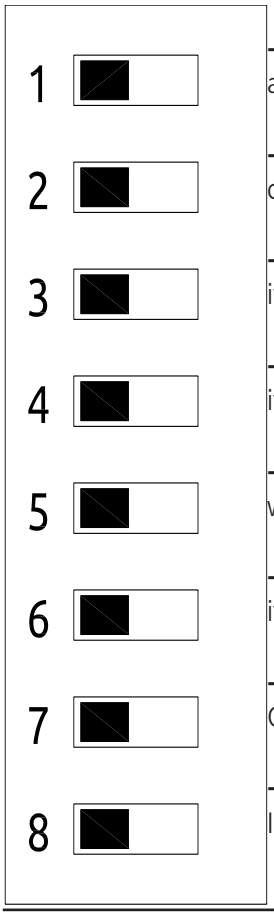

- Sound alarm memory (DIP 1 ON):
a melody sounds when you switch off the system after an alarm

- Visual alarm memory (DIP 2 ON):
continue fast flashes after an alarm when the system is armed (it turn off when the system is disarmed)

- Sound system status indication ARMED / DISARMED (DIP 3 ON):
it emits 3 beep when you arm the system, 1 long beep when you disarm the system

- Visual system status indication ARMED / DISARMED (DIP 4 ON):
it emits 3 flashes when you arm the system, 1 long flash when you disarm the system

- fixed signaling of system ARMED (DIP 5 ON):
when the system is armed gives a double flash

- siren OK indication " stand by " (DIP 6 ON):
it emits a short flash every 10 seconds when the siren is operating properly

- change type sound (DIP 7 ON): loss of Omologation
Change the type of sound (from 1400Hz/1700Hz to 1400Hz/1600Hz)

- timing of the siren (DIP 8 ON):
Increases the maximum duration of the siren sound without system control from 3' to 15'

DESCRIPTION OF THE ELECTRONIC BOARD

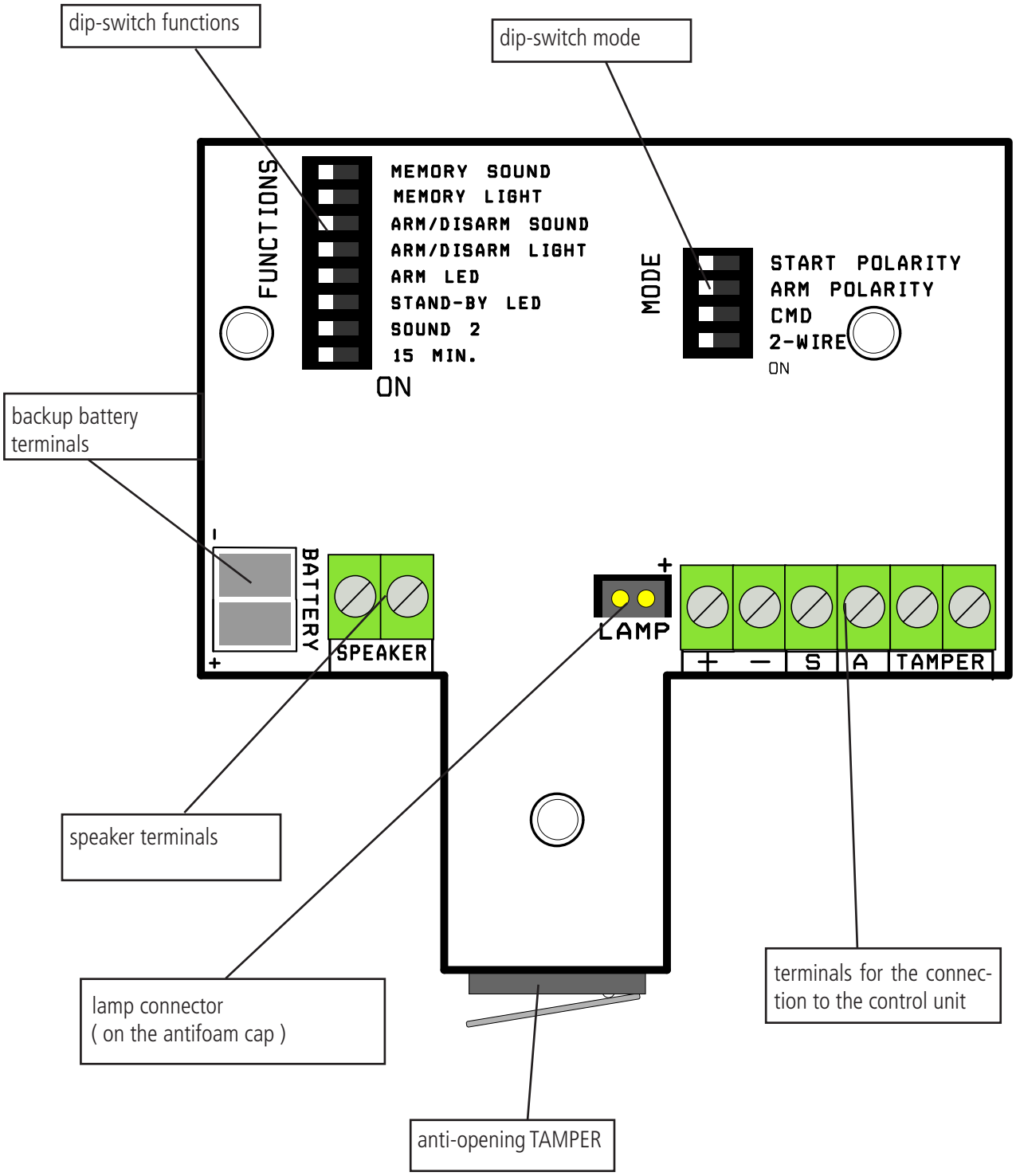

-- terminals + - = siren power supply (13.8Vcc)
-- TAMPER = terminals for the connection to the control unit tamper line
-- terminal S = siren activation trigger
-- terminal A = control unit status trigger (need to get the sounding and / or bright signalling)

MOUNT SIREN

The siren board and the other components are housed inside a metal box:

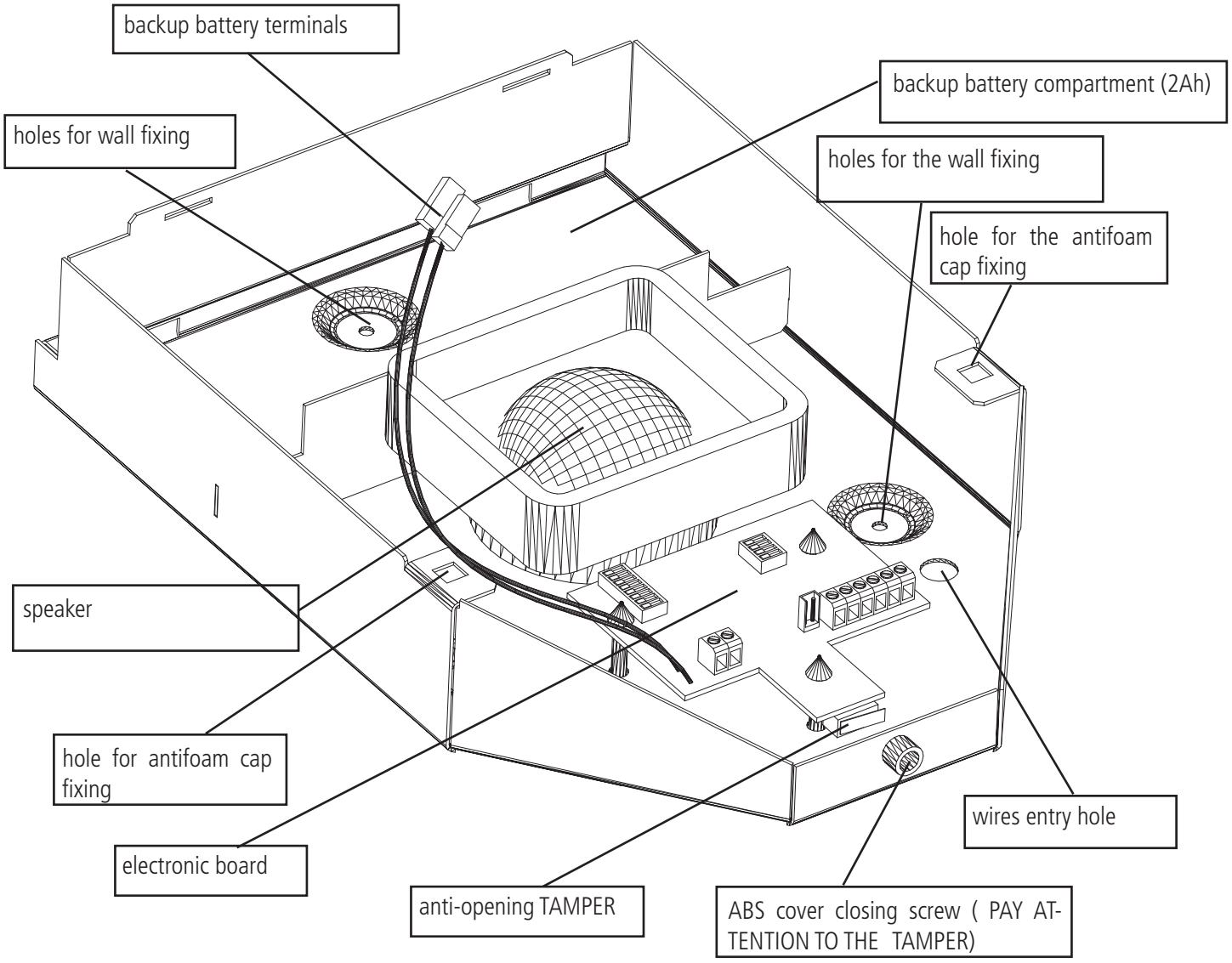

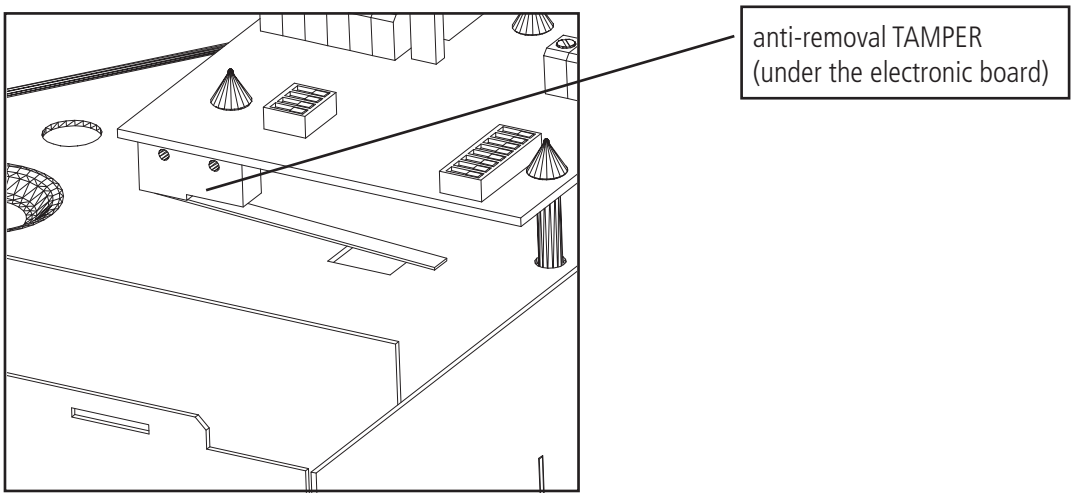

The installation expect the of a screw fixed to the wall, whose head will press the tamper anti-removal microswitch, positioned on the underside of the board.

Note: bending the metal tab of the microswitch for the same function will void the certification.

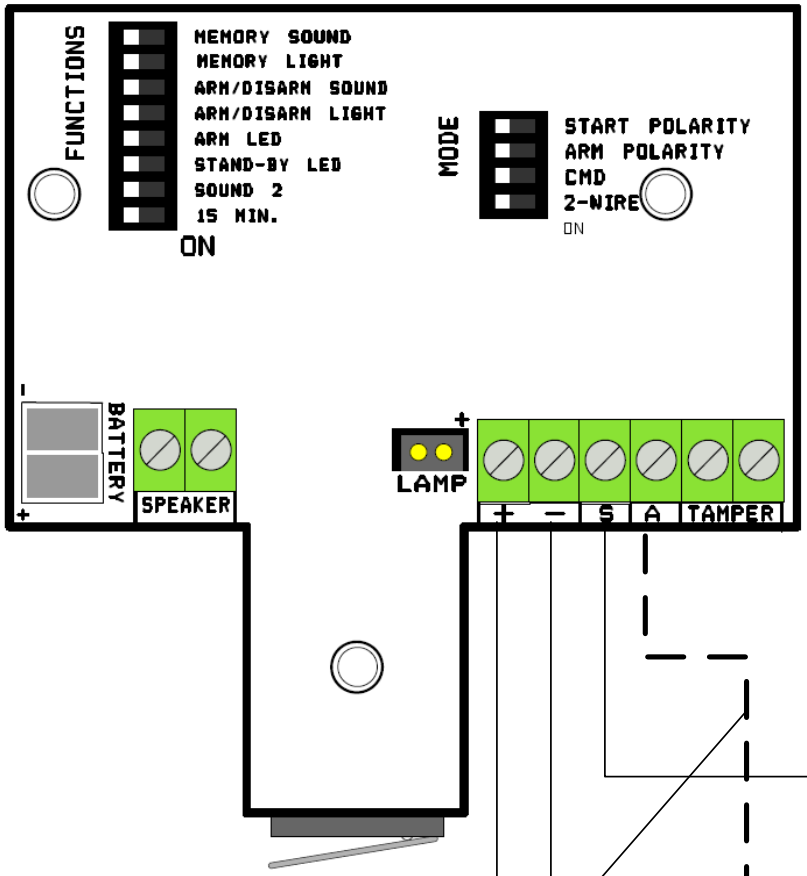

Traditional connection scheme with positive missing: all dip in OFF position. Connect power supply, and only the S terminal to the control unit.

Note 1: if you want to activate the STAND BY led position the relative DIP in ON, see instruction.

Note 2: if you want to activate the system status notification with one of the two configuration described in the manual connect a system status output to the A terminal.

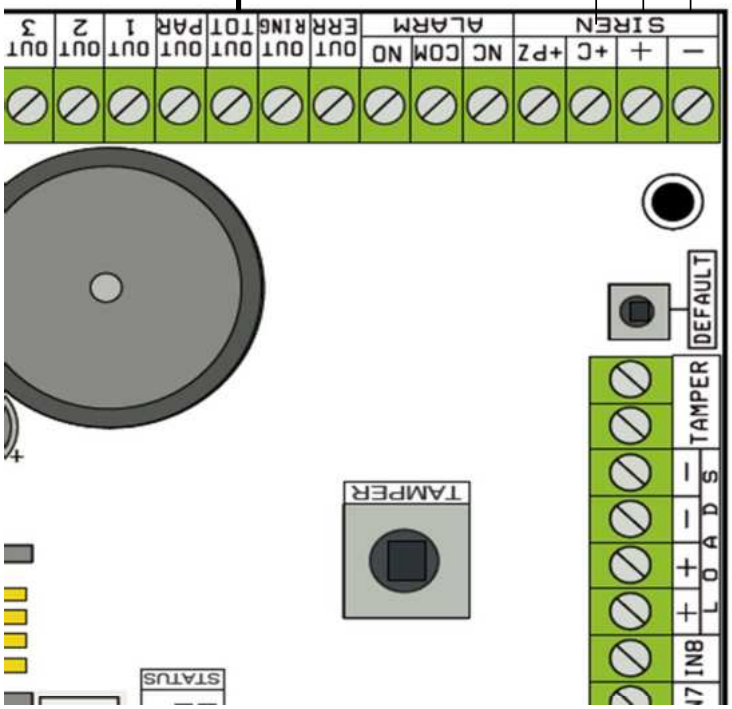

Meets the requirements:
Conforme ai requisiti:
CEI EN 50131-4:2010-08
Grade 2
Class 4

RoHS COMPLIANT 2002/95/EC

CE

TECHNICAL SPECIFICATION

Power supply	13,8Vcc rated
Maximal current	1.3A
Minimum trigger voltage (positive missing)	6Vcc
Fundamental frequency	1400Hz / 1700Hz
Secondary frequency	1600Hz / 3500Hz
Sound pressure	110dB@1mt
Maximal sound period	15’
IP grade	IP54
Operative temperature range	from -25°C to +55°C
Backup battery	12V 2.2Ah
Anti-opening	•
Cover	steel / ABS
Weight	
Dimensions	

Installation must be carried out following the local installation norms by qualified personnel
AMC Elettronica S.r.l. refuses any responsibility when changes or unauthorized repairs are made to the product/system.
It is recommended to test the operation of the alarm product/system at least once a month. Despite frequent testing and due to, but not limited to, any or all of the following: tampering, electrical or communication disruption or improper use, it is possible for the product/system to fail to prevent burglary, robbery, fire or otherwise. A properly installed and maintained alarm system can only reduce the risk that this happens.

FIŞĂ TEHNICĂ E-NVR - Network video recorder NVR cu PoE

Nr Crt.	Specificațiile tehnice impuse prin Caietul de sarcini	Corespondența propunerii tehnice cu specificațiile tehnice impuse prin Caietul de sarcini	Producător
0	1	2	3
1.	**Parametrii tehnici şi funcţionali:** - Alimentare: 230Vca: - Nivel umiditate: 20-90% (fără condensare); - Canale video conectabile: minim 16 - Compresie video: H.264+, H.265; - Intrare/ieşire audio:1/2; - Intrări ieşiri alarma:16/4; - 1 x ieşire VGA; - 1 x ieşire HDMI: - 1 x DVD-R/W; - Rezoluţii înregistrare: 5MP/ 3MP / 1080P / UXGA / 720P / VGA / 4CIF / DCIF / 2CIF / CIF / QCIF; - Rezoluţii redare: 5MP /3MP / 1080P / UXGA / 720P / 4CIF / VGA / DCIF / 2CIF / CIF / QCIF; - Backup pe LAN/ USB; - Stocare: 2 HDD-uri S-ATA până la 4 TB bucata; - Interfaţa reţea: minim 16x interfeţe reţea cu PoE; - 3x porturi USB 2.0, RS-485, RS-233; - Control prin telecomanda, mouse, panou frontal; - Protocoale reţea: TCP/IP, PPPoE, DHCP, DNS, DDNS, NTP,SADP, SMTP, SNMP, NFS, iSCSI, UPnPrn, HTTPS; - Compatibilitate cu protocoalele IPv4, IPv6 şi reţeaua EtherNet 10/100 Mbps; - Posibilitatea de "LiveView / PlayBack" atât la nivel local cât şi de la distanţă: - Notificare prin email: alarme, evenimente, poze etc.; - Suport pentru browser IE, iOS, Android; - Functii logare evenimente hardware, NVR, eveniment, utilizator curent, istoric utilizator, acces fişiere. - Posibilitate trimitere evenimente prin E-mail; - Notificare prin email: alarme, evenimente, poze etc.; Suportă zoom digital 15x la vizualizare/ playback - H.264+, H.265 & Dual-stream compresie video - Suporta camere HD-TVI si camere analogice HDMI şiVGA (ieşiri) la rezolutie de 1920 x 1080 P - Sofware inclus; - Preluare stare de alarmă in PLC;	**Parametrii tehnici şi funcţionali:** - Alimentare: 230Vca: - Nivel umiditate: 20-90% (fără condensare); - Canale video conectabile: minim 16 - Compresie video: H.264+, H.265; - Intrare/ieşire audio:1/2; - Intrări ieşiri alarma:16/4; - 1 x ieşire VGA; - 1 x ieşire HDMI: - 1 x DVD-R/W; - Rezoluţii înregistrare: 5MP/ 3MP / 1080P / UXGA / 720P / VGA / 4CIF / DCIF / 2CIF / CIF / QCIF; - Rezoluţii redare: 5MP /3MP / 1080P / UXGA / 720P / 4CIF / VGA / DCIF / 2CIF / CIF / QCIF; - Backup pe LAN/ USB; - Stocare: 2 HDD-uri S-ATA până la 4 TB bucata; - Interfaţa reţea: minim 16x interfeţe reţea cu PoE; - 3x porturi USB 2.0, RS-485, RS-233; - Control prin telecomanda, mouse, panou frontal; - Protocoale reţea: TCP/IP, PPPoE, DHCP, DNS, DDNS, NTP,SADP, SMTP, SNMP, NFS, iSCSI, UPnPrn, HTTPS; - Compatibilitate cu protocoalele IPv4, IPv6 şi reţeaua EtherNet 10/100 Mbps; - Posibilitatea de "LiveView / PlayBack" atât la nivel local cât şi de la distanţă: - Notificare prin email: alarme, evenimente, poze etc.; - Suport pentru browser IE, iOS, Android; - Functii logare evenimente hardware, NVR, eveniment, utilizator curent, istoric utilizator, acces fişiere. - Posibilitate trimitere evenimente prin E-mail; - Notificare prin email: alarme, evenimente, poze etc.; Suportă zoom digital 15x la vizualizare/ playback - H.264+, H.265 & Dual-stream compresie video - Suporta camere HD-TVI si camere analogice HDMI şiVGA (ieşiri) la rezolutie de 1920 x 1080 P - Sofware inclus; - Preluare stare de alarmă in PLC;	**HIK-VISION**

2.	**Specificaţii de performanţă şi condiţii privind siguranta în exploatare:** - Temperatura de funcţionare: 0° C ... +40 °C - Umiditate 10-90%;	**Specificaţii de performanţă şi condiţii privind siguranta în exploatare:** - Temperatura de funcţionare: 0° C ... +40 °C - Umiditate 10-90%;	
3.	**Condiţii privind conformitatea cu standarde relevante:** - Normele fabricantului trebuie să fie echivalente şi nu doar corespunzătoare cu unul din standardele ISO, ANSI, IEC, DIN; - Lista standarde referintă respectate la: proiectarea/ fabricarea/testarea produsului;	**Condiţii privind conformitatea cu standarde relevante:** - Normele fabricantului trebuie să fie echivalente şi nu doar corespunzătoare cu unul din standardele ISO, ANSI, IEC, DIN; - Lista standarde referintă respectate la: proiectarea/ fabricarea/testarea produsului;	
4.	**Condiţii de garanţie şi postgaranţie:** - Producătorul va garanta calitatea şi buna funcţionare a produsului timp de 24 luni de la punerea în funcţiune sau de 36 luni de la data livrarii. - Produsul va corespunde normelor tehnice şi standardelor europene.	**Condiţii de garanţie şi postgaranţie:** - Producătorul garantează calitatea şi buna funcţionare a produsului timp de 24 luni de la punerea în funcţiune sau de 36 luni de la data livrarii. - Produsul va corespunde normelor tehnice şi standardelor europene.	
5.	**Condiţii cu caracter tehnic:** - Nu vor fi luate în consideraţie decât ofertele însoţite de documentaţie completă pentru selecţie şi montaj în limba română. - Vor fi anexate: • instrucţiuni de montaj (scheme de conectare, broşuri, cataloage); • instrucţiuni de exploatare; • buletine de încercări, verificări, probe; • declaratie de conformitate.	**Condiţii cu caracter tehnic:** - Nu vor fi luate în consideraţie decât ofertele însoţite de documentaţie completă pentru selecţie şi montaj în limba română. - Vor fi anexate: • instrucţiuni de montaj (scheme de conectare, broşuri, cataloage); • instrucţiuni de exploatare; • buletine de încercări, verificări, probe; • declaratie de conformitate.	

DS-7616NXI-I2/16P/S
AcuSense Series NVR

Key Feature

- H.265+/H.265/H.264+/H.264 video formats
- Intelligent analytics based on deep learning algorithm
- Up to 4-ch perimeter protection
- Up to 1-ch facial recognition for video stream
- Up to 4-ch facial recognition for face picture
- Up to 16-ch IP camera inputs
- Up to 16-ch 1080p decoding capability

Compression and Recording

- H.265+ compression effectively reduces the storage space by up to 75%
- Full channel IP cameras connection
- Adopt stream over TLS encryption technology which provides more secure stream transmission service
- Support double verification for playback and downloading

HD Video Output

- Provide independent HDMI and VGA outputs
- HDMI video output at up to 4K resolution

Storage and Playback

- Up to 2 SATA interfaces for HDD connection
- 16-ch synchronous playback at up to 1080p resolution

Smart & POS Function

- Support multiple VCA (Video Content Analytics) events
- Smart search for the selected area in the video, and smart playback to improve the playback efficiency
- POS information overlay on live view and playback
- POS triggered recording and alarm

Network & Ethernet Access

- 16 independent PoE network interfaces
- 1 self-adaptive 10/100/1000 Mbps Ethernet interfaces
- Hik-Connect & DDNS (Dynamic Domain Name System) for easy network management
- Smooth streaming technology
- Support web access without plug-in

Typical Application

Facial Recognition and Face Picture Comparison

Modeling and analyzing face pictures captured by cameras. Realize blocklist alarm and stranger alarm via face picture library. Search target people by picture and name features.

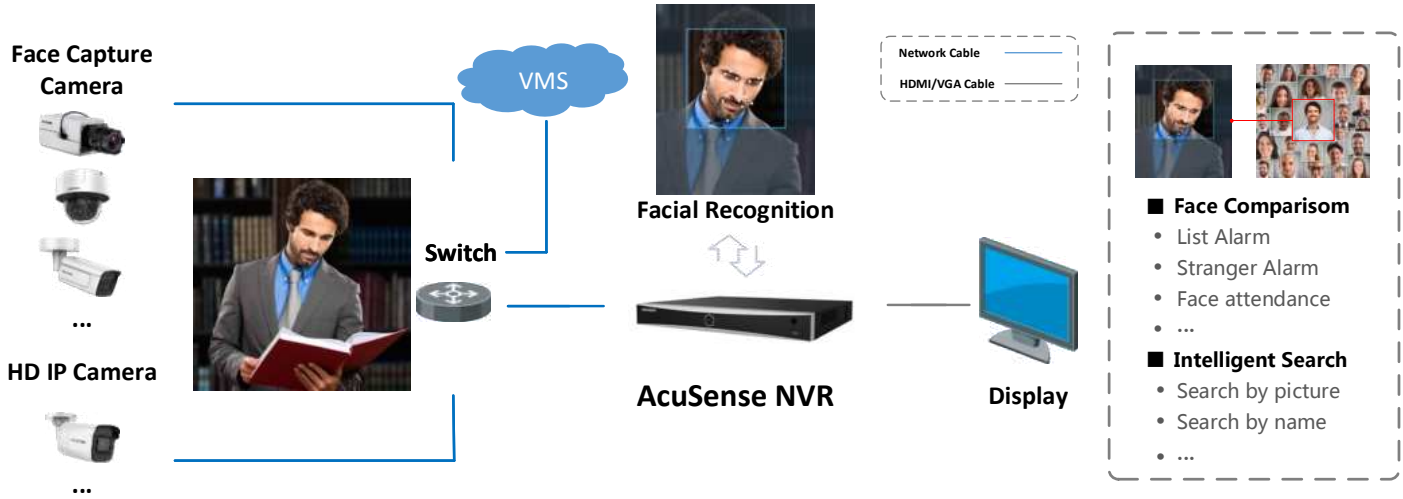

Perimeter Protection

Adopt deep learning algorithm to reduce false alarm, effectively reduces the false alarm caused by tree branches, leaves, shadow, light, vehicles, small animals, etc.

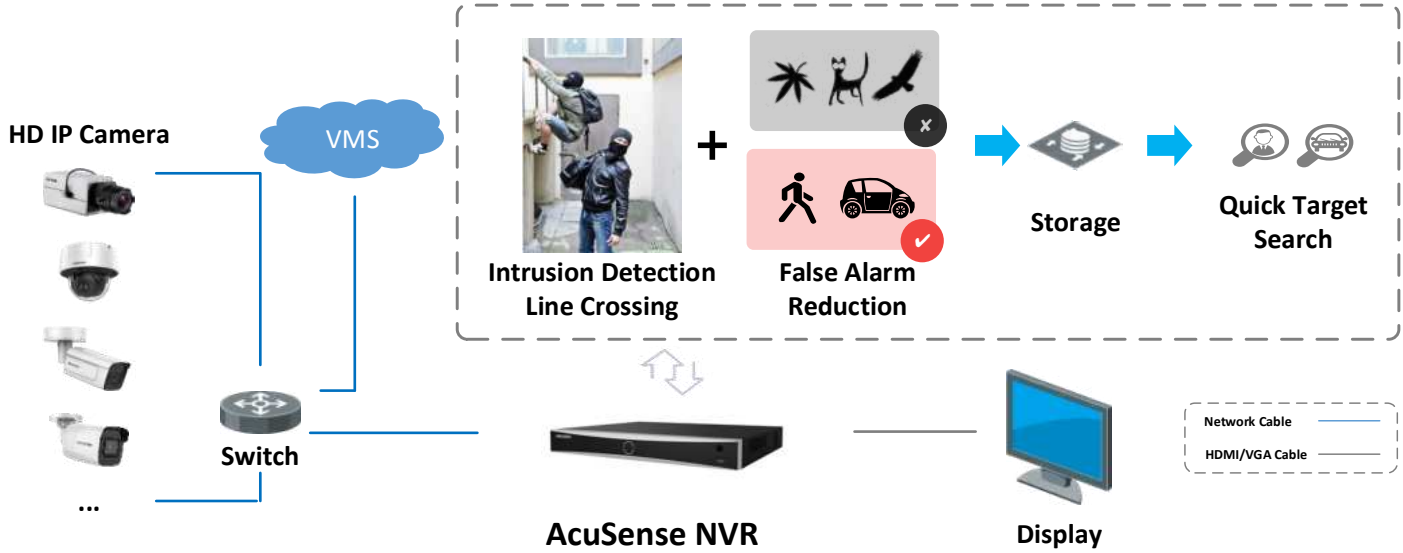

Specification

Model	DS-7616NXI-I2/16P/S
Facial Recognition[1]	
Facial detection and analytics	Face picture comparison, human face capture, face picture search
Face picture library	Up to 16 face picture libraries, with up to 10,000 face pictures in total (each picture ≤ 512 KB, total capacity ≤ 150 MB)
Face picture comparison	4-ch face picture comparison alarm
Performance of facial detection and analytics	1-ch human face capture (HD network camera, up to 8 MP, H.264/H.265)
Motion Detection 2.0[1]	
Human/vehicle analysis	16-ch
Perimeter Protection[1]	
Human/Vehicle analysis	Up to 4-ch 2 MP (H.264/H.265) video analysis for human and vehicle recognition to reduce false alarm; Up to 12 rules in total
Video and Audio	
IP video input	16-ch
	Up to 12 MP resolution
Incoming bandwidth	160 Mbps
Outgoing bandwidth	256 Mbps
HDMI output	4K (3840 × 2160)/60Hz, 4K (3840 × 2160)/30Hz, 2K (2560 × 1440)/60Hz, 1920 × 1080/60Hz, 1600 × 1200/60Hz, 1280 × 1024/60Hz, 1280 × 720/60Hz, 1024 × 768/60Hz
VGA output	1-ch, 1920 × 1080/60Hz, 1280 × 1024/60Hz, 1280 × 720/60Hz, 1024 × 768/60Hz,
Video output mode	HDMI/VGA independent output
CVBS output	1-ch, BNC (1.0 Vp-p, 75 Ω), resolution: PAL: 704 × 576, NTSC: 704 × 480
Audio output	1-ch, RCA (Linear, 1 KΩ)
Two-way audio input	1-ch, RCA (2.0 Vp-p, 1 KΩ)
Decoding	
Decoding format	H.265+/H.265/H.264+/H.264/MPEG4
Recording resolution	12 MP/8 MP/6 MP/5 MP/4 MP/3 MP/1080p/UXGA/720p/VGA /4CIF/DCIF/2CIF/CIF/QCIF
Synchronous playback	16-ch
Capability	16-ch@1080p (30 fps)
Dual stream recording	Support
Stream type	Video, Video & Audio
Audio compression	G.711ulaw/G.711alaw/G.722/G.726/MP2L2
Network	
Remote connections	128
Network protocol	TCP/IP, DHCP, IPv4, IPv6, DNS, DDNS, NTP, RTSP, SADP, SMTP, SNMP, NFS, iSCSI, ISUP, UPnP™, HTTP, HTTPS
Network interface	1, RJ-45 10/100/1000 Mbps self-adaptive Ethernet interface
PoE	

Interface	16, RJ-45 10/100 Mbps self-adaptive Ethernet interface
Power	≤ 200 W
Supported standard	IEEE 802.3 af/at
Auxiliary interface	
SATA	2 SATA interfaces supporting hot-plug
Capacity	Up to 10 TB capacity for each disk
Alarm in/out	4/1
USB interface	Front panel: 1 × USB 2.0; Rear panel: 1 × USB 3.0
General	
Power supply	100 to 240 VAC, 50 to 60 Hz
Consumption (without HDD)	≤ 15 W
Working temperature	-10 °C to 55 °C (14 °F to 131 °F)
Working humidity	10% to 90%
Chassis	1U chassis
Dimension (W × D × H)	385 × 315 × 52 mm (15.2"× 12.4" × 2.0")
Weight (without HDD)	≤ 3 kg (6.6 lb)
Certification	
FCC	Part 15 Subpart B, ANSI C63.4-2014
CE	EN 55032:2015, EN 61000-3-2, EN 61000-3-3, EN 50130-4

1: Facial recognition, motion detection 2.0 and perimeter protection cannot be enabled at the same time. Enable one function will make the others unavailable.

Dimension

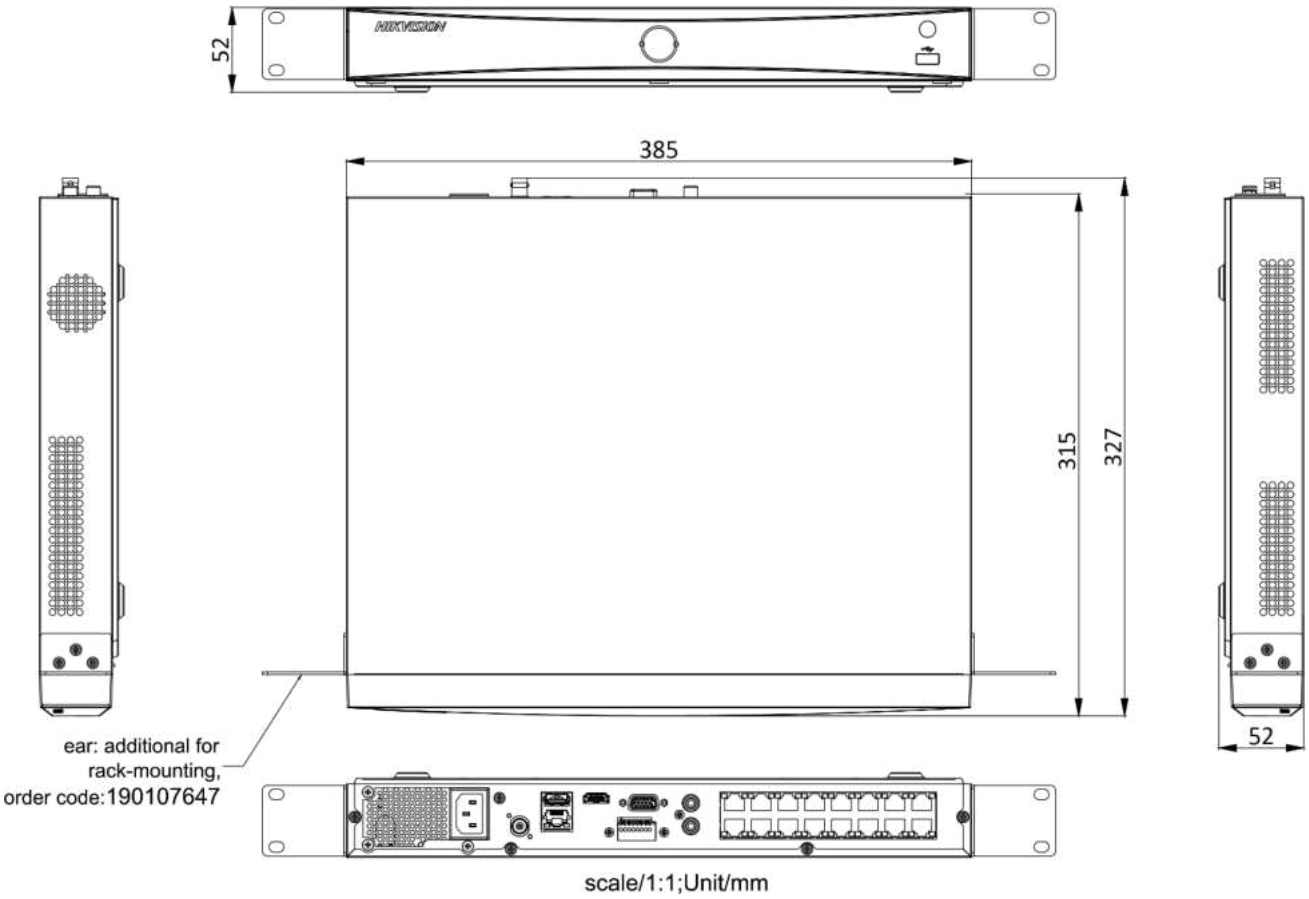
52
385
315
327
52
ear: additional for
rack-mounting,
order code:190107647
scale/1:1;Unit/mm

Physical Interface

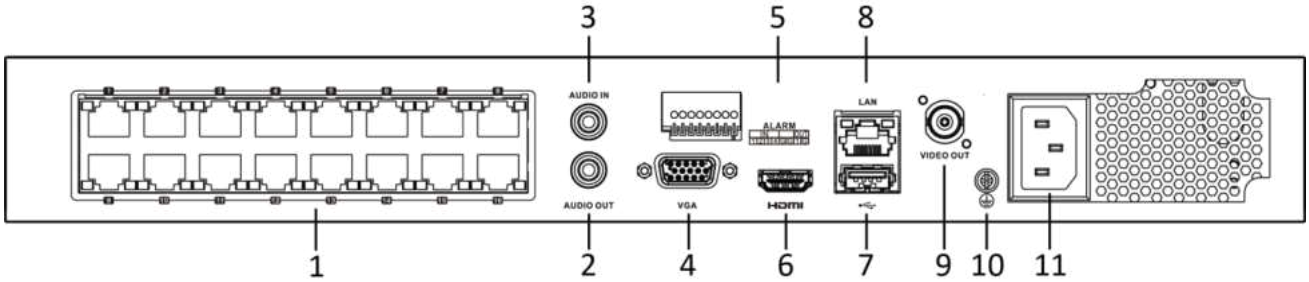

No.	Description	No.	Description
1	PoE Interfaces	7	USB 3.0 interface
2	AUDIO OUT	8	LAN Network Interface
3	AUDIO IN	9	VIDEO OUT
4	VGA Interface	10	GND
5	Alarm In/Alarm Out	11	Power Supply
6	HDMI Interface		

Available Model

DS-7616NXI-I2/16P/S

Distributed by

Headquarters
No.555 Qianmo Road, Binjiang District,
Hangzhou 310051, China
T +86-571-8807-5998
overseasbusiness@hikvision.com

Hikvision USA
T +1-909-895-0400
sales.usa@hikvision.com

Hikvision Europe
T +31-23-5542770
sales.eu@hikvision.com

Hikvision UK & Ireland
T +01628-902140
sales.uk@hikvision.com

Hikvision UAE
T +971-4-4432090
salesme@hikvision.com

Hikvision Russia
T +7-495-669-67-99
saleru@hikvision.com

Hikvision Australia
T +61-2-8599-4233
salesau@hikvision.com

Hikvision Italy
T +39-0438-6902
info.it@hikvision.com

Hikvision South Africa
Tel: +27 (10) 0351172
sale.africa@hikvision.com

Hikvision Singapore
T +65-6684-4718
sg@hikvision.com

Hikvision Korea
T +82-(0)31-731-8817
sales.korea@hikvision.com

Hikvision India
T +91-22-28469900
sales@pramahikvision.com

Hikvision Brazil
T +55 11 3318-0050
Latam.support@hikvision.com

Hikvision France
T +33(0)1-85-330-450
info.fr@hikvision.com

Hikvision Spain
T +34-91-737-16-55
info.es@hikvision.com

Hikvision Poland
T +48-22-460-01-50
info.pl@hikvision.com

Hikvision Canada
T +1-866-200-6690
sales.canada@hikvision.com

Hikvision Turkey
T +90 (216)521 7070- 7074
sales.tr@hikvision.com

Hikvision Kazakhstan
T +7-727-9730667
nikia.panfilov@hikvision.ru

Hikvision Tashkent
T +99-87-1238-9438
uzb@hikvision.ru

Hikvision Indonesia
T +62-21-2933759
Sales.Indonesia@hikvision.com

Hikvision Thailand
T +662-275-9949
sales.thailand@hikvision.com

Hikvision Malaysia
T +601-7652-2413
sales.my@hikvision.com

Hikvision Vietnam
T +84-974270888
sales.vt@hikvision.com

Hikvision Hong Kong
T +852-2151-1761
info.hk@hikvision.com

Hikvision Colombia
sales.colombia@hikvision.com

FISA TEHNICA E-CV-E - Camera video IP de exterior

Nr Crt.	Specificațiile tehnice impuse prin Caietul de sarcini	Corespondența propunerii tehnice cu specificațiile tehnice impuse prin Caietul de sarcini	Producător
0	1	2	3
1.	**Parametrii tehnici si funcționali:** - Camera de supraveghere Full HD 3 Megapixel 1080p; - Compresia datelor: H.264+, H265 Motion JPEGH.; - Senzor imagine: 1/3 inch CMOS Progressive Scan color; - Mărime imagine: 295(W)x105(H)x95(D)mm; - Lentilă varifocală / fixă 2,8-12mm 3MP, deschidere reglabilă între 90 și 30 grade; - Distanţa de iluminare: 40÷60m; - Wavelenght: 850 nm; - Iluminare minima: 0.1 Lux/F1.5, 0 Lux (IR pornit); - Clasa de protectie: IP66; - Compensare alb: auto; - Sincronizare: internă; - Temperatura de operare: -25/+50 grade Celsius RH95% Max; - Raport semnal/zgomot: > 50 dB; - Alimentare: PoE; - Rezoluţii suportate: 2048x1536, 1920x1080, 1280x720; - Max frame rate: 30 fps @1280 x 720 - Protocoale: TCP/IP, ICMP, HTTP, HTTPS, FTP, DHCP, DNS, DDNS, RTP, RTSP, RTCP, PPPoE, NTP, UPnP, SMTP, SNMP, IGMP, 802.1X, QoS, IPv6, Bonjour (SIP optional); - Network Interface: 1 RJ45 10M/100M port Ethernet adaptive	**Parametrii tehnici si funcționali:** - Camera de supraveghere Full HD 3 Megapixel 1080p; - Compresia datelor: H.264+, H265 Motion JPEGH.; - Senzor imagine: 1/3 inch CMOS Progressive Scan color; - Mărime imagine: 295(W)x105(H)x95(D)mm; - Lentilă varifocală / fixă 2,8-12mm 3MP, deschidere reglabilă între 90 și 30 grade; - Distanţa de iluminare: 40÷60m; - Wavelenght: 850 nm; - Iluminare minima: 0.1 Lux/F1.5, 0 Lux (IR pornit); - Clasa de protectie: IP66; - Compensare alb: auto; - Sincronizare: internă; - Temperatura de operare: -25/+50 grade Celsius RH95% Max; - Raport semnal/zgomot: > 50 dB; - Alimentare: PoE; - Rezoluţii suportate: 2048x1536, 1920x1080, 1280x720; - Max frame rate: 30 fps @1280 x 720 - Protocoale: TCP/IP, ICMP, HTTP, HTTPS, FTP, DHCP, DNS, DDNS, RTP, RTSP, RTCP, PPPoE, NTP, UPnP, SMTP, SNMP, IGMP, 802.1X, QoS, IPv6, Bonjour (SIP optional); - Network Interface: 1 RJ45 10M/100M port Ethernet adaptive	**HIK-VISION**
2.	**Specificaţii de performanţă şi condiţii privind siguranta în exploatare:** - Functii speciale: • Zi/Noapte • AWB (Automatic White Balance); • AGC (Automatic Gain Control); - Shutter Time: 1/25s -1/100.000s; - Lens Mount: 14 (diametrul); - Digital noise reduction: 3D DNR	**Specificaţii de performanţă şi condiţii privind siguranta în exploatare:** - Functii speciale: • Zi/Noapte • AWB (Automatic White Balance); • AGC (Automatic Gain Control); - Shutter Time: 1/25s -1/100.000s; - Lens Mount: 14 (diametrul); - Digital noise reduction: 3D DNR	
3.	**Condiţii privind conformitatea cu standarde**	**Condiţii privind conformitatea cu standarde**	

	relevante: - SR EN 50132;	**relevante:** - SR EN 50132;	
4.	**Condiţii de garanţie şi postgaranţie:** - Producătorul va garanta calitatea şi buna funcţionare a produsului timp de 24 luni de la punerea în funcţiune sau de 36 luni de la data livrarii. - Produsul va corespunde normelor tehnice şi standardelor europene.	**Condiţii de garanţie şi postgaranţie:** - Producătorul garantează calitatea şi buna funcţionare a produsului timp de 24 luni de la punerea în funcţiune sau de 36 luni de la data livrarii. - Produsul va corespunde normelor tehnice şi standardelor europene.	
5.	**Condiţii cu caracter tehnic:** - Nu vor fi luate în consideraţie decât ofertele însoţite de documentaţie completă pentru selecţie şi montaj în limba română. - Vor fi anexate: • instrucţiuni de montaj (scheme de conectare, broşuri, cataloage); • instrucţiuni de exploatare; • buletine de încercări, verificări, probe; • declaratie de conformitate.	**Condiţii cu caracter tehnic:** - Nu vor fi luate în consideraţie decât ofertele însoţite de documentaţie completă pentru selecţie şi montaj în limba română. - Vor fi anexate: • instrucţiuni de montaj (scheme de conectare, broşuri, cataloage); • instrucţiuni de exploatare; • buletine de încercări, verificări, probe; • declaratie de conformitate.	

DS-2CD2663G2-IZS
6 MP AcuSense Motorized Varifocal Bullet Network Camera

AcuSense

Empowered by deep learning algorithms, Hikvision AcuSense technology brings human and vehicle targets classification alarms to front- and back-end devices. The system focuses on human and vehicle targets, vastly improving alarm efficiency and effectiveness.

- High quality imaging with 6 MP resolution
- Motorized varifocal lens for easy installation and monitoring
- Efficient H.265+ compression technology
- Clear imaging against strong backlight due to 120 dB true WDR technology
- Focus on human and vehicle targets classification based on deep learning
- Audio and alarm interface available
- Water and dust resistant (IP67) and vandal-resistant (IK10)

▪ Specification

Camera	
Image Sensor	1/2.4" Progressive Scan CMOS
Max. Resolution	3200 × 1800
Min. Illumination	Color: 0.005 Lux @ (F1.6, AGC ON), B/W: 0 Lux with IR
Shutter Time	1/3 s to 1/100,000 s
Day & Night	IR cut filter
Angle Adjustment	Pan: 0° to 355°, tilt: 0° to 90°, rotate: 0° to 360°
Lens	
Lens Type	Varifocal lens, motorized lens, 2.8 to 12 mm
Focal Length & FOV	2.8 to 12 mm, horizontal FOV 106° to 35°, vertical FOV 56° to 20°, diagonal FOV 127° to 41°
Lens Mount	Ø14
Iris Type	Fixed
Aperture	F1.6
DORI	
DORI	2.8 to 12 mm: Wide: D: 68 m, O: 27 m, R: 13 m, I: 7 m Tele: D: 200 m, O: 79 m, R: 40 m, I: 20 m
Illuminator	
Supplement Light Type	IR
Supplement Light Range	Up to 60 m
Smart Supplement Light	Yes
IR Wavelength	850 nm
Video	
Main Stream	50 Hz: 25 fps (3200 × 1800, 2688 × 1520, 1920 × 1080, 1280 × 720) 60 Hz: 30 fps (3200 × 1800, 2688 × 1520, 1920 × 1080, 1280 × 720)
Sub-Stream	50 Hz: 25 fps (1280 x 720, 640 × 480, 640 × 360) 60 Hz: 30 fps (1280 x 720, 640 × 480, 640 × 360)
Third Stream	50 Hz: 10 fps (1920 × 1080, 1280 × 720, 640 × 480, 640 × 360) 60 Hz: 10 fps (1920 × 1080, 1280 × 720, 640 × 480, 640 × 360) *Third stream is supported under certain settings.
Video Compression	Main stream: H.265/H.264/H.264+/H.265+ Sub-stream: H.265/H.264/MJPEG Third stream: H.265/H.264 *Third stream is supported under certain settings.
Video Bit Rate	32 Kbps to 16 Mbps
H.264 Type	Baseline Profile/Main Profile/High Profile
H.265 Type	Main Profile
Bit Rate Control	CBR/VBR
Scalable Video Coding (SVC)	H.264 and H.265 encoding
Region of Interest (ROI)	1 fixed region for main stream and sub-stream
Audio	
Audio Compression	G.711ulaw/G.711alaw/G.722.1/G.726/MP2L2/PCM/MP3/AAC-LC

Audio Bit Rate	64 Kbps (G.711ulaw/G.711alaw)/16 Kbps (G.722.1)/16 Kbps (G.726)/16 Kbps to 64 Kbps (AAC-LC)/32 to 192 Kbps (MP2L2)/8 to 320 Kbps (MP3)
Audio Sampling Rate	8 kHz/16 kHz/32 kHz/44.1 kHz/48 kHz
Environment Noise Filtering	Yes
Network	
Protocols	TCP/IP, ICMP, HTTP, HTTPS, FTP, DHCP, DNS, DDNS, RTP, RTSP, NTP, UPnP, SMTP, IGMP, 802.1X, QoS, IPv4, IPv6, UDP, Bonjour, SSL/TLS, PPPoE, SNMP, WebSocket, WebSockets, SRTP, SFTP
Simultaneous Live View	Up to 6 channels
API	Open Network Video Interface (Profile S, Profile G, Profile T), ISAPI, SDK, ISUP
User/Host	Up to 32 users. 3 user levels: administrator, operator and user
Security	Password protection, complicated password, HTTPS encryption, 802.1X authentication (EAP-TLS, EAP-LEAP, EAP-MD5), watermark, IP address filter, basic and digest authentication for HTTP/HTTPS, WSSE and digest authentication for Open Network Video Interface, RTP/RTSP over HTTPS, control timeout settings, security audit log , TLS 1.1/1.2/1.3, host authentication (MAC address)
Network Storage	NAS (NFS, SMB/CIFS), auto network replenishment (ANR)
Client	iVMS-4200, Hik-Connect, Hik-Central
Web Browser	Plug-in required live view: IE 10, IE 11, Plug-in free live view : Chrome 57.0+, Firefox 52.0+, Edge 89+ Local service: Chrome 57.0+, Firefox 52.0+, Edge 89+
Image	
Image Parameters Switch	Yes
Image Settings	Rotate mode, saturation, brightness, contrast, sharpness, gain, white balance adjustable by client software or web browser
Day/Night Switch	Day, Night, Auto, Schedule
Wide Dynamic Range (WDR)	120 dB
SNR	≥ 52 dB
Image Enhancement	BLC, HLC, 3D DNR
Privacy Mask	4 programmable polygon privacy masks
Interface	
Ethernet Interface	1 RJ45 10 M/100 M self-adaptive Ethernet port
On-Board Storage	Built-in memory card slot, support micro SD card, up to 512 GB
Audio	1 input (line in), two-core terminal block, max. input amplitude: 3.3 Vpp, input impedance: 4.7 KΩ, interface type: non-equilibrium; 1 output (line out), two-core terminal block, max. output amplitude: 3.3 Vpp, output impedance: 100 Ω, interface type: non-equilibrium
Alarm	1 input, 1 output (max. 24 VDC/24 VAC, 1A)
Reset Key	Yes
Event	
Basic Event	Motion detection (human and vehicle targets classification), video tampering alarm, exception
Smart Event	Line crossing detection, intrusion detection Supports human and vehicle targets classification Face detection

Linkage	Upload to FTP/memory card/NAS, notify surveillance center, trigger recording, trigger capture, send email, audible warning, trigger alarm output
General	
Power	12 VDC ± 25%, 1.08 A, max. 13 W, Ø5.5 mm coaxial power plug, reverse polarity protection, PoE: IEEE 802.3at, Class 4, max. 15 W
Material	Aluminum alloy body
Dimension	308.5 mm × 97.9 mm × 93 mm (12.2" × 3.9" × 3.7")
Package Dimension	385 mm × 190 mm × 180 mm (15.2" × 7.5" × 7.1")
Weight	Approx. 1385 g (3.1 lb.)
With Package Weight	Approx. 2046 g (4.5 lb.)
Storage Conditions	-30 °C to 60 °C (-22 °F to 140 °F). Humidity 95% or less (non-condensing)
Startup and Operating Conditions	-30 °C to 60 °C (-22 °F to 140 °F). Humidity 95% or less (non-condensing)
Language	33 languages English, Russian, Estonian, Bulgarian, Hungarian, Greek, German, Italian, Czech, Slovak, French, Polish, Dutch, Portuguese, Spanish, Romanian, Danish, Swedish, Norwegian, Finnish, Croatian, Slovenian, Serbian, Turkish, Korean, Traditional Chinese, Thai, Vietnamese, Japanese, Latvian, Lithuanian, Portuguese (Brazil), Ukrainian
General Function	Heartbeat, mirror, password reset via email, pixel counter, anti-flicker,
Approval	
EMC	FCC (47 CFR Part 15, Subpart B); CE-EMC (EN 55032: 2015, EN 61000-3-2: 2014, EN 61000-3-3: 2013, EN 50130-4: 2011 +A1: 2014); RCM (AS/NZS CISPR 32: 2015); IC (ICES-003: Issue 6, 2016); KC (KN 32: 2015, KN 35: 2015)
Safety	UL (UL 60950-1); CB (IEC 60950-1:2005 + Am 1:2009 + Am 2:2013); CE-LVD (EN 60950-1:2005 + Am 1:2009 + Am 2:2013)
Environment	CE-RoHS (2011/65/EU); WEEE (2012/19/EU); Reach (Regulation (EC) No 1907/2006)
Protection	IP67 (IEC 60529-2013), IK10 (IEC 62262: 2002)

▪ Typical Application

Hikvision products are classified into three levels according to their anti-corrosion performance. Refer to the following description to choose for your using environment.

This model has NO SPECIFIC PROTECTION.

Level	Description
Top-level protection	Hikvision products at this level are equipped for use in areas where professional anti-corrosion protection is a must. Typical application scenarios include coastlines, docks, chemical plants, and more.
Moderate protection	Hikvision products at this level are equipped for use in areas with moderate anti-corrosion demands. Typical application scenarios include coastal areas about 2 kilometers (1.24 miles) away from coastlines, as well as areas affected by acid rain.

No specific protection	Hikvision products at this level are equipped for use in areas where no specific anti-corrosion protection is needed.

▪ Available Model

DS-2CD2663G2-IZS (2.8 to 12 mm)

▪ Dimension

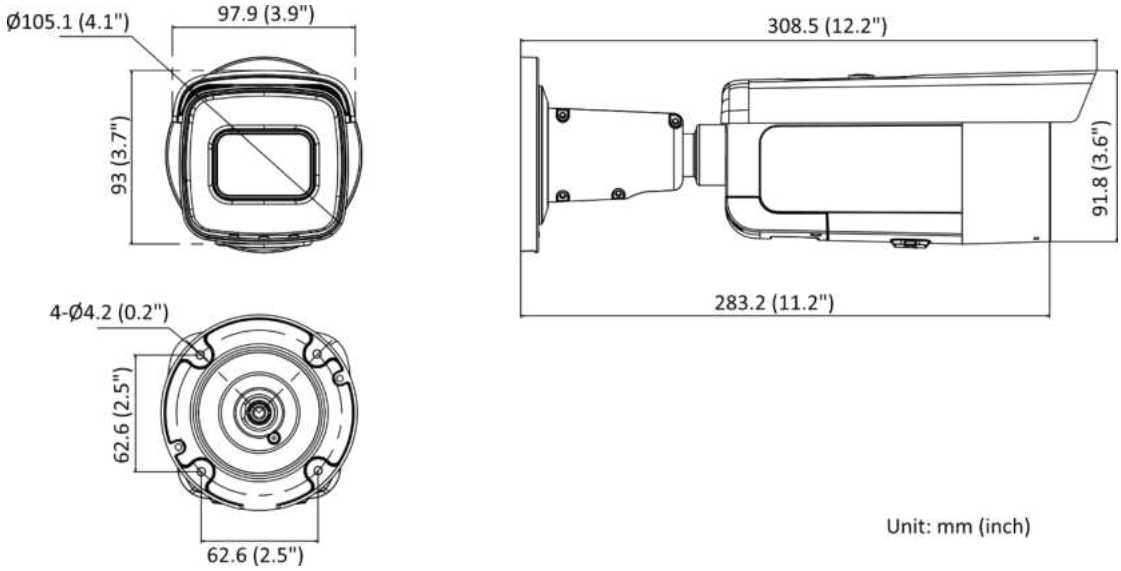

▪ Accessory

▪Optional

DS-1475ZJ-SUS Vertical Pole Mount	DS-1280ZJ-S Junction Box	DS-1260ZJ Junction Box	DS-1275ZJ-S-SUS Vertical Pole Mount	DS-1276ZJ-SUS Corner Mount
				

Headquarters
No.555 Qianmo Road, Binjiang District,
Hangzhou 310051, China
T +86-571-8807-5998
www.hikvision.com

FIȘĂ TEHNICĂ E-UPS1
Sursă neîntreruptibilă UPS pentru CCTV

Nr Crt.	Specificațiile tehnice impuse prin Caietul de sarcini	Corespondența propunerii tehnice cu specificațiile tehnice impuse prin Caietul de sarcini	Producător
0	1	2	3
1.	**Parametrii tehnici şi funcţionali:** - Capacitate putere: 1500VA; - Voltaj nominal output: 230 VCA; - Frecventa output: 50 - 60 Hz; - Distorsiuni: <5% U - Conectori output: 8 x IEC 320 C13; 2 x IEC Jumpers - Voltaj nominal input: 151 - 302Vca; - Frecventa input: 50 - 60 Hz; - Conectori input: IEC 320 C14; - Timp mediu de încărcare: minim 3 ore; - Temperatura: 0 °C .. +40 °C; - Umiditate: 0 - 95%; - Zgomot: minim 45 dB; - Temperatura depozitare: -15 .. +45 °C; - Umiditate depozitare: 0 - 95%;	**Parametrii tehnici şi funcţionali:** - Capacitate putere: 1500VA; - Voltaj nominal output: 230 VCA; - Frecventa output: 50 - 60 Hz; - Distorsiuni: <5% U - Conectori output: 8 x IEC 320 C13; 2 x IEC Jumpers - Voltaj nominal input: 151 - 302Vca; - Frecventa input: 50 - 60 Hz; - Conectori input: IEC 320 C14; - Timp mediu de încărcare: minim 3 ore; - Temperatura: 0 °C .. +40 °C; - Umiditate: 0 - 95%; - Zgomot: minim 45 dB; - Temperatura depozitare: -15 .. +45 °C; Umiditate depozitare: 0 - 95%;	SCHRACK
2.	**Specificaţii de performanţă şi condiţii privind siguranta în exploatare:** - Intrări: • conexiuni de intrare: IEC-320 C20, Schuko • CEE 7 / EU1-16P, British BS 1363A • tensiune nominala de intrare: 230V • frecventa de intrare: 50/60 Hz+/- 3 Hz (detectare automata) • interval tensiune de intrare pentru operații principale: 140 - 280V - Ieșiri: • distorsiune tensiune de ieșire: Sub 5% frecventa de ieșire (sincronizata cu alimentarea de la rețea): • 50/60Hz +/- 3 Hz • conexiuni de ieșire: (8) IEC 320 C13, (2) IEC 320 C19, (2) IEC Jumpers • tensiune nominala la ieșire: 230V • factor de vârf: 3 : 1 • topologie dubla conversie • tip forma de unda: Unda sinusoidala • placa de relee pentru monitorizare semnale/alarme - Protecție: • capacitate nominala supratensiune: 645 Joules • filtrare multipolara zgomot, cu funcționare continua: 0,3% • Limitare supratensiune IEEE: timp de răspuns prindere zero : conform	**Specificaţii de performanţă şi condiţii privind siguranta în exploatare:** - Intrări: • conexiuni de intrare: IEC-320 C20, Schuko • CEE 7 / EU1-16P, British BS 1363A • tensiune nominala de intrare: 230V • frecventa de intrare: 50/60 Hz+/- 3 Hz (detectare automata) • interval tensiune de intrare pentru operații principale: 140 - 280V - Ieșiri: • distorsiune tensiune de ieșire: Sub 5% frecventa de ieșire (sincronizata cu alimentarea de la rețea): • 50/60Hz +/- 3 Hz • conexiuni de ieșire: (8) IEC 320 C13, (2) IEC 320 C19, (2) IEC Jumpers • tensiune nominala la ieșire: 230V • factor de vârf: 3 : 1 • topologie dubla conversie • tip forma de unda: Unda sinusoidala • placa de relee pentru monitorizare semnale/alarme - Protecție: • capacitate nominala supratensiune: 645 Joules • filtrare multipolara zgomot, cu funcționare continua: 0,3% • Limitare supratensiune IEEE: timp de răspuns prindere zero : conform	

	standardului UL 1449; - Baterie: Baterie cu placi de plumb si acid, etanșată, care nu necesita întreținere, cu electrolit suspendat: etanș - Management: Da; - Panou de control: LCD cu consola; - Alarma sonora: Da; - Atenționări sonore: Mod baterie Baterie slaba Suprasarcina; - Filtrare: Da; - Preluare stare de alarmă în PLC;	standardului UL 1449; - Baterie: Baterie cu placi de plumb si acid, etanșată, care nu necesita întreținere, cu electrolit suspendat: etanș - Management: Da; - Panou de control: LCD cu consola; - Alarma sonora: Da; - Atenționări sonore: Mod baterie Baterie slaba Suprasarcina; - Filtrare: Da; - Preluare stare de alarmă în PLC;	
3.	**Condiţii privind conformitatea cu standarde relevante:** - Construcție conform: IEC 60038 IEC Standard Voltages;	**Condiţii privind conformitatea cu standarde relevante:** - Construcție conform: IEC 60038 IEC Standard Voltages;	
4.	**Condiţii de garanţie şi postgaranţie:** - Producătorul va garanta calitatea şi buna funcţionare a produsului timp de 24 luni de la punerea în funcţiune sau de 36 luni de la data livrarii. - Produsul va corespunde normelor tehnice şi standardelor europene.	Condiţii de garanţie şi postgaranţie: - Producătorul va garanta calitatea şi buna funcţionare a produsului timp de 24 luni de la punerea în funcţiune sau de 36 luni de la data livrarii. - Produsul va corespunde normelor tehnice şi standardelor europene.	
5.	**Condiţii cu caracter tehnic:** - Nu vor fi luate în consideraţie decât ofertele însoţite de documentaţie completă pentru selecţie şi montaj în limba română. - Vor fi anexate: • instrucţiuni de montaj (scheme de conectare, broşuri, cataloage); • instrucţiuni de exploatare; • buletine de încercări, verificări, probe; • declaratie de conformitate.	Condiţii cu caracter tehnic: - Nu vor fi luate în consideraţie decât ofertele însoţite de documentaţie completă pentru selecţie şi montaj în limba română. - Vor fi anexate: • instrucţiuni de montaj (scheme de conectare, broşuri, cataloage); • instrucţiuni de exploatare; • buletine de încercări, verificări, probe; declaratie de conformitate.	

FISA TEHNICA E-MT - Modem transmisie date si antena

Nr Crt.	Specificațiile tehnice impuse prin Caietul de sarcini	Corespondența propunerii tehnice cu specificațiile tehnice impuse prin Caietul de sarcini	Producător
0	1	2	3
1.	**Parametrii tehnici şi funcţionali:** **Produs: Modem GPRS (Router)** Produs industrial 4G (LTE); Rezervă 3G (UMTS/HSPA) şi 2G (GPRS/EDGE); Conexiune la internet de mare viteză să poată ajunge până la 150Mbps; Transmitere SMS pentru alerte; LED de stare; Sistem de montaj pe şină DIN; Temperatura mediului ambiant in funcţionare: -39 / +65°C; Umiditate permisă în funcţionare: 10 - 95% fără condensare; Grad protectie IP20; Ieşire digitală: minim 1 ; Intrare digitală: minim 2; Alimentare: 10/30 V curent continuu; **Interfete:** Ethernet cu minim 2 porturi 10/100Base-T(X); Conector tip RJ45; Protocoale suportate: minim TCP/IP, UDP/IP, FTP, HTTP(S); Wireless: GSM / GPRS / EDGE / UMTS *I* HSPA / LTE (FDD); Viteza de transmisie date 150Mbps (LTE (DL)): Conector de antena de tip SMA male: SIM interfaţa 11,8V, 3V; GPRS: Clasa 12, Clasa B; EDGE: Clasa 10, multislot; Slot microSD pentru încărcare configurare, card inclus; EDGE: Clasa 10, multislot; **Funcţii:** Management web de bază Funcţii de securitate: protocol, IP, firewall integrat; **Card MicroSD** Viteză de scriere: 100Mbps; Capacitate: în funcţie de necesarul softului de configurare al router-ului;	**Parametrii tehnici şi funcţionali:** **Produs: Modem GPRS (Router)** Produs industrial 4G (LTE); Rezervă 3G (UMTS/HSPA) şi 2G (GPRS/EDGE); Conexiune la internet de mare viteză să poată ajunge până la 150Mbps; Transmitere SMS pentru alerte; LED de stare; Sistem de montaj pe şină DIN; Temperatura mediului ambiant in funcţionare: -40 / +75°C; Umiditate permisă în funcţionare: 10 - 95% fără condensare; Grad protectie IP30; Ieşire digitală: minim 1 ; Intrare digitală: minim 2; Alimentare: 9-30 V curent continuu; **Interfete:** Ethernet cu minim 2 porturi 10/100Base-T(X); Conector tip RJ45; Protocoale suportate: minim TCP/IP, UDP/IP, FTP, HTTP(S); Wireless: GSM / GPRS / EDGE / UMTS *I* HSPA / LTE (FDD); Viteza de transmisie date 150Mbps (LTE (DL)): Conector de antena de tip SMA male: SIM interfaţa 11,8V, 3V; GPRS: Clasa 12, Clasa B; EDGE: Clasa 10, multislot; Slot microSD pentru încărcare configurare, card inclus; EDGE: Clasa 10, multislot; **Funcţii:** Management web de bază Funcţii de securitate: protocol, IP, firewall integrat; **Card MicroSD** Viteză de scriere: 100Mbps; Capacitate: în funcţie de necesarul softului de configurare al router-ului;	**TELTONIKA**

	Antena Utilizabilă pentru 4G, 3G, 2G; Grad protecţie: IP65; Temperatură mediului ambiant în funcţionare: -40° C ...+65°C; Cablu de conectare: lungime suficientă conform aplicaţie; Impedanţă: 50 Ω Conexiune: tip SMA tata Prindere: cu dispozitive de prindere fixă (gheare sau suruburi);	**Antena** Utilizabilă pentru 4G, 3G, 2G; Grad protecţie: IP65; Temperatură mediului ambiant în funcţionare: -40° C ...+65°C; Cablu de conectare: lungime suficientă conform aplicaţie; Impedanţă: 50 Ω Conexiune: tip SMA tata Prindere: cu dispozitive de prindere fixă (gheare sau suruburi);	
2.	**Specificaţii de performanţă şi condiţii privind siguranta în exploatare:** Conform Caietului de Sarcini Functionalitate continuă 24/7	**Specificaţii de performanţă şi condiţii privind siguranta în exploatare:** Conform Caietului de Sarcini Functionalitate continuă 24/7	
3.	**Condiţii privind conformitatea cu standarde relevante:** Compatibilitate electromagnetică: în conformitate cu Directiva Europeană 2014/53/EU Certificare CE Standarde: EN 61000-6-2, EN 61000-4-4, EN 61000-4-6 Certificare CE	**Condiţii privind conformitatea cu standarde relevante:** Compatibilitate electromagnetică: în conformitate cu Directiva Europeană 2014/53/EU Certificare CE Standarde: EN 61000-6-2, EN 61000-4-4, EN 61000-4-6 Certificare CE	
4.	**Condiţii de garanţie şi postgaranţie:** Producătorul va garanta calitatea şi buna funcţionare a produsului timp de 24 luni de la punerea în funcţiune sau de 36 luni de la data livrarii. Produsul va corespunde normelor tehnice şi standardelor europene.	**Condiţii de garanţie şi postgaranţie:** Producătorul va garanta calitatea şi buna funcţionare a produsului timp de 24 luni de la punerea în funcţiune sau de 36 luni de la data livrarii. Produsul va corespunde normelor tehnice şi standardelor europene.	
5.	**Condiţii cu caracter tehnic:** - Nu vor fi luate în consideraţie decât ofertele însoţite de documentaţie completă pentru selecţie şi montaj în limba română. - Vor fi anexate: • instrucţiuni de montaj (scheme de conectare, broşuri, cataloage); • instrucţiuni de exploatare; • buletine de încercări, verificări, probe; • declaratie de conformitate.	**Condiţii cu caracter tehnic:** - Nu vor fi luate în consideraţie decât ofertele însoţite de documentaţie completă pentru selecţie şi montaj în limba română. - Vor fi anexate: • instrucţiuni de montaj (scheme de conectare, broşuri, cataloage); • instrucţiuni de exploatare; • buletine de încercări, verificări, probe; • declaratie de conformitate.	

TELTONIKA | Networks

RUT955

HARDWARE

FRONT VIEW

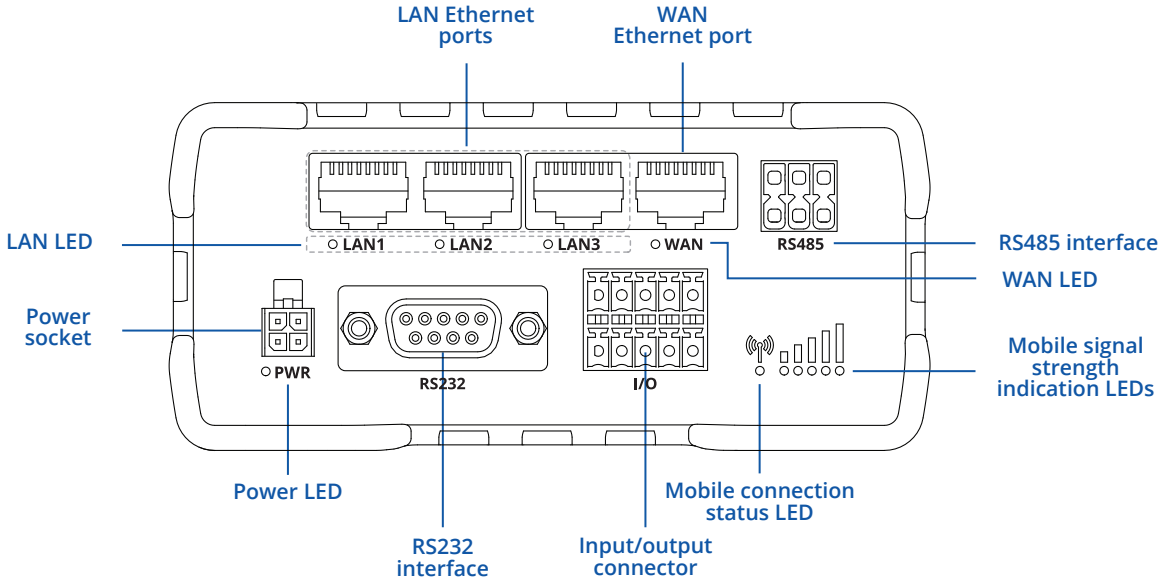

BACK VIEW

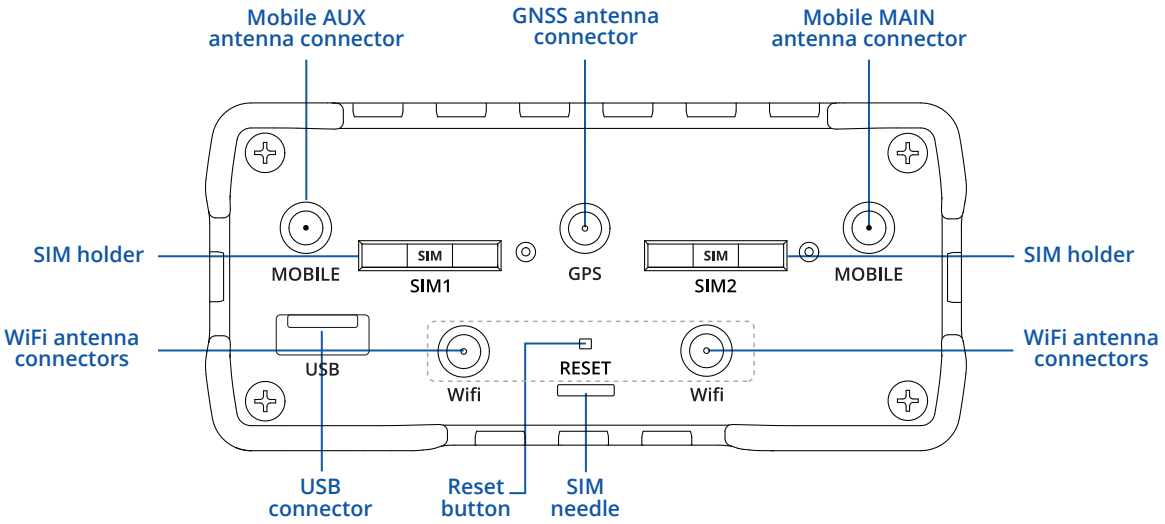

POWER SOCKET PINOUT

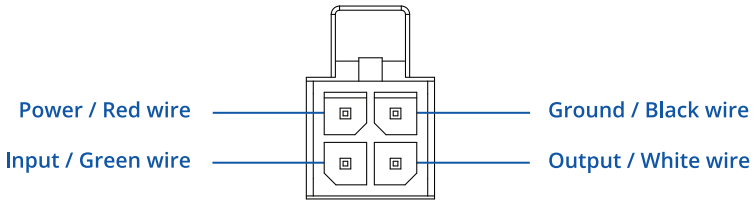

FEATURES

MOBILE

Mobile module	4G (LTE) – Cat 4 up to 150 Mbps, 3G – Up to 42 Mbps, 2G – Up to 236.8 kbps
SIM switch	2 SIM cards, auto-switch cases: weak signal, data limit, SMS limit, roaming, no network, network denied, data connection fail, SIM idle protection
Status	Signal strength (RSSI), SINR, RSRP, RSRQ, EC/IO, RSCP, Bytes sent/received, connected band, IMSI, ICCID
SMS	SMS status, SMS configuration, send/read SMS via HTTP POST/GET, EMAIL to SMS, SMS to EMAIL, SMS to HTTP, SMS to SMS, scheduled SMS, SMS autoreply, SMPP
Black/White list	Operator black/white list
Band management	Band lock, Used band status display
APN	Auto APN
Bridge	Direct connection (bridge) between mobile ISP and device on LAN
Passthrough	Router assigns its mobile WAN IP address to another device on LAN
Multiple PDN (optional)	Possibility to use different PDNs for multiple network access and services (not available in standard FW)

WIRELESS

Wireless mode	IEEE 802.11b/g/n, Access Point (AP), Station (STA)
WiFi security	WPA2-Enterprise - PEAP, WPA2-PSK, WEP, WPA-EAP, WPA-PSK; AES-CCMP, TKIP, Auto Cipher modes, client separation
SSID	SSID stealth mode and access control based on MAC address
WiFi users	up to 100 simultaneous connections
Wireless Hotspot	Captive portal (Hotspot), internal/external Radius server, built in customizable landing page

NETWORK

Routing	Static routing, Dynamic routing (BGP, OSPF v2, RIP v1/v2)
Network protocols	TCP, UDP, IPv4, IPv6, ICMP, NTP, DNS, HTTP, HTTPS, FTP, SMTP, SSL v3, TLS, ARP, VRRP, PPP, PPPoE, UPNP, SSH, DHCP, Telnet, SMPP, MQTT, Wake On Lan (WOL)
VoIP passthrough support	H.323 and SIP-alg protocol NAT helpers, allowing proper routing of VoIP packets
Connection monitoring	Ping Reboot, Wget Reboot, Periodic Reboot, LCP and ICMP for link inspection
Firewall	Port forward, traffic rules, custom rules
DHCP	Static and dynamic IP allocation, DHCP Relay, Relayd
QoS / Smart Queue Management (SQM)	Traffic priority queuing by source/destination, service, protocol or port, WMM, 802.11e
DDNS	Supported >25 service providers, others can be configured manually
Network backup	VRRP, Mobile, Wired and WiFi WAN options, each of which can be used as backup, using automatic Failover
Load balancing	Balance your internet traffic over multiple WAN connections
SSHFS (optional)	Possibility to mount remote file system via SSH protocol (not available in standard FW)

SECURITY

Authentication	Pre-shared key, digital certificates, X.509 certificates
Firewall	Pre-configured firewall rules can be enabled via web-ui, unlimited firewall configuration via CLI; DMZ; NAT; NAT-T
Attack prevention	DDOS prevention (SYN flood protection, SSH attack prevention, HTTP/HTTPS attack prevention), port scan prevention (SYN-FIN, SYN-RST, X-mas, NULL flags, FIN scan attacks)
VLAN	Port and tag based VLAN separation
Mobile quota control	Set up custom data limits for both SIM cards
WEB filter	Blacklist for blocking out unwanted websites, whitelist for specifying allowed sites only
Access control	Flexible access control of TCP, UDP, ICMP packets, MAC address filter

ETHERNET

WAN	1 x WAN port (can be configured to LAN) 10/100 Mbps, compliance IEEE 802.3, IEEE 802.3u standards, supports auto MDI/MDIX
LAN	3 x LAN ports, 10/100 Mbps, compliance IEEE 802.3, IEEE 802.3u standards, supports auto MDI/MDIX

VPN

OpenVPN	Multiple clients and server can be running simultaneously, 12 encryption methods
OpenVPN Encryption	DES-CBC, RC2-CBC, DES-EDE-CBC, DES-EDE3-CBC, DESX-CBC, BF-CBC, RC2-40-CBC, CAST5-CBC, RC2-64-CBC, AES-128-CBC, AES-192-CBC, AES-256-CBC
IPsec	IKEv1, IKEv2, supports up to 4 x VPN IPsec tunnels (instances), with 5 encryption methods (DES, 3DES, AES128, AES192, AES256)
GRE	GRE tunnel
PPTP, L2TP	Client/Server services can run simultaneously
Stunnel	Proxy designed to add TLS encryption functionality to existing clients and servers without any changes in the programs' code
DMVPN	Method of building scalable IPsec VPNs
SSTP	SSTP client instance support
ZeroTier	ZeroTier VPN
WireGuard	WireGuard VPN client and server support

MODBUS TCP SLAVE

ID range	Respond to one ID in range [1;255] or any
Allow Remote Access	Allow access through WAN
Custom registers	Modbus TCP custom register block requests, which read/write to a file inside the router, and can be used to extend Modbus TCP Slave functionality

MODBUS TCP MASTER

Supported functions	01, 02, 03, 04, 05, 06, 15, 16
Supported data formats	8 bit: INT, UINT; 16 bit: INT, UINT (MSB or LSB first); 32 bit: float, INT, UINT (ABCD (big-endian), DCBA (little-endian), CDAB, BADC)

MODBUS RTU MASTER (RS232)

Supported baud rates	From 300 to 115200
Supported functions	01, 02, 03, 04, 05, 06, 15, 16
Number of data bits	From 5 to 8
Number of stop bits	1 or 2
Parity	None, Even, Odd
Flow	None, RTS/CTS, Xon/Xoff
Duplex	Full duplex

MODBUS RTU MASTER (RS485)

Supported baud rates	From 300 to 115200
Supported functions	01, 02, 03, 04, 05, 06, 15, 16
Number of data bits	8
Number of stop bits	1
Parity	None, Even, Odd
Flow	None, Xon/Xoff
Duplex	Half duplex

MODBUS DATA TO SERVER

Protocol	HTTP(S), MQTT, Azure MQTT

MQTT GATEWAY

MQTT gateway	Allows sending commands and receiving data from Modbus Master through MQTT broker

MONITORING & MANAGEMENT

WEB UI	HTTP/HTTPS, status, configuration, FW update, CLI, troubleshoot, event log, system log, kernel log
FOTA	Firmware update from server, automatic notification
SSH	SSH (v1, v2)
SMS	SMS status, SMS configuration, send/read SMS via HTTP POST/GET
CALL	Reboot, Status, WiFi on/off, Mobile data on/off, Output on/off, answer/hang-up with a timer
TR-069	OpenACS, EasyCwmp, ACSLite, tGem, LibreACS, GenieACS, FreeACS, LibCWMP, Friendly tech, AVSystem
MQTT	MQTT Broker, MQTT publisher
SNMP	SNMP (v1, v2, v3), SNMP trap
JSON-RPC	Management API over HTTP/HTTPS
MODBUS	MODBUS TCP status/control
RMS	Teltonika Remote Management System (RMS)

IoT PLATFORMS

Clouds of things	Allows monitoring of: Device data, Mobile data, Network info, Availability
ThingWorx	Allows monitoring of: WAN Type, WAN IP Mobile Operator Name, Mobile Signal Strength, Mobile Network Type
Cumulocity	Allows monitoring of: Device Model, Revision and Serial Number, Mobile Cell ID, ICCID, IMEI, Connection Type, Operator, Signal Strength, WAN Type and IP
Azure IoT Hub	Can send device IP, Number of bytes send/received/ 3G connection state, Network link state, IMEI, ICCID, Model, Manufacturer, Serial, Revision, IMSI, Sim State, PIN state, GSM signal, WCDMA RSCP WCDMA EC/IO, LTE RSRP, LTE SINR, LTE RSRQ, CELL ID, Operator, Operator number, Connection type, Temperature, PIN count to Azure IoT Hub server

SYSTEM CHARACTERISTICS

CPU	Atheros Wasp, MIPS 74Kc, 550 MHz
RAM	128 MB, DDR2
FLASH storage	16 MB, SPI Flash

FIRMWARE / CONFIGURATION

WEB UI	Update FW from file, check FW on server, configuration profiles, configuration backup, restore point
FOTA	Update FW/configuration from server
RMS	Update FW/configuration for multiple devices
Keep settings	Update FW without losing current configuration

FIRMWARE CUSTOMIZATION

Operating system	RutOS (OpenWrt based Linux OS)
Supported languages	Busybox shell, Lua, C, C++
Development tools	SDK package with build environment provided

SERIAL

RS232	DB9 connector, full RS232 (with RTS, CTS)
RS485	RS485 Full Duplex (4 wires) and Half Duplex (2 wires). 300-115200 baud rate
Serial functions	Console, Serial over IP, Modem, Modbus gateway, NTRIP Client

LOCATION TRACKING

GNSS	GPS, GLONASS, BeiDou, Galileo and QZSS
Coordinates	GNSS coordinates via WebUI, SMS, TAVL, RMS
NMEA	NMEA 0183
NTRIP	NTRIP protocol (Networked Transport of RTCM via Internet Protocol)
Server software	Supported server software TAVL, RMS
Geofencing	Configurable multiple geofence zones

INPUT/OUTPUT

Input	1 x digital input (0 - 3 V), 1 x digital galvanically isolated input (0 - 30 V), 1 x analog input (0 - 24 V), 1 x Digital non-isolated input (on 4 pin power connector)
Output	1 x digital open collector output (30 V, 250 mA), 1 x SPST relay output (40 V, 4 A), 1 x Digital open collector output (30 V, 300 mA, on 4 pin power connector)
Events	SMS, EMAIL, RMS

USB

Data rate	USB 2.0
Applications	Samba share, USB-to-serial
External devices	Possibility to connect external HDD, flash drive, additional modem, printer
Storage formats	FAT, FAT32, NTFS

SD CARD

Physical size	Micro SD
Applications	Samba share, Storage Memory Expansion, DLNA
Capacity	Up to 64 GB
Storage Formats	FAT32, NTFS, ext2, ext3, ext4

POWER

Connector	4 pin industrial DC power socket
Input voltage range	9 – 30 VDC reverse polarity protection; surge protection >31 VDC 10us max
PoE (passive)	Passive PoE over spare pairs. Possibility to power up through LAN port, not compatible with IEEE802.3af, 802.3at and 802.3bt standards
Power consumption	< 2 W idle, < 7 W Max

PHYSICAL INTERFACES (PORTS, LEDS, ANTENNAS, BUTTONS, SIM)

Ethernet	4 x RJ45 ports, 10/100 Mbps
I/O's	2 x Inputs and 2 x Outputs on 10 pin industrial socket, 1 x Digital input and 1 x Digital output on 4 pin power connector (available from HW revision 1600)
Status LEDs	1 x bi-color connection status LED, 5 x connection strength LEDs, 4 x LAN status LEDs, 1 x Power LED
SIM	2 x SIM slots (Mini SIM - 2FF), 1.8 V/3 V, external SIM holders, eSIM (Optional)
Power	1 x 4 pin power connector
Input/output	1x 10 pin industrial socket for inputs/outputs
Antennas	2 x SMA for LTE, 2 x RP-SMA for WiFi, 1 x SMA for GNSS
USB	1 x USB A port for external devices
SD card	Micro SD card slot
RS232	1 x DB9 socket
RS485	1 x 6 pin industrial socket
Reset	Reboot/User default reset/Factory reset button

PHYSICAL SPECIFICATION

Casing material	Aluminium housing, plastic panels
Dimensions (W x H x D)	110 x 50 x 100 mm
Weight	287 g
Mounting options	DIN rail (can be mounted on two sides), flat surface placement

OPERATING ENVIRONMENT

Operating temperature	-40 °C to 75 °C
Operating humidity	10% to 90% non-condensing
Ingress Protection Rating	IP30

REGULATORY & TYPE APPROVALS

Regulatory	CE/RED, FCC, IC/ISED, EAC, RCM, PTCRB, RoHS, WEEE, Wi-Fi Alliance CE/RED, FCC, IC, PTCRB, RCM, EAC, CCC, RoHS, WEEE, IP rating, Anatel, GCF, REACH, E-mark, DNV GL, ECE Regulation 118, Morocco ANRT, Thailand NBTC, Ukraine UCRF, SDPPI (POSTEL), WiFi Certified, Modbus Conformance
Operator	AT&T, Verizon
Regulatory	ECE R10 (E-mark) ECE R118

EMI IMMUNITY

Standards	Draft EN 301 489-1 V2.2.0, Draft EN 301 489-17 V3.2.0, Draft EN 301 489-19 V2.1.0, Draft EN 301 489-52 V1.1.0 FCC 47 CFR Part 15B (2017), ANSI C63.4 (2014)
ESD	EN61000-4-2:2009
RS	EN 61000-4-3:2006 + A1:2008 + A2:2010
EFT	EN 61000-4-4:2012
Surge immunity (AC Power Line)	EN 61000-4-5:2006
Surge immunity (Ethernet ports)	EN 61000-4-5:2014, clause 7.1 of ITU-T K21
Transient and surges	ISO 7632-2:2004
CS	EN 61000-4-6:2009
DIP	EN 61000-4-11:2004

RF

Standards	EN 300 328 V2.1.1, EN 301 511 V12.5.1, EN 301 908-1 V11.1.1, EN 301 908-2 V11.1.1, EN 301 908-13 V11.1.1, EN 303 413 V1.1.0 AS/CA S042.1:2018, AS/ACIF S042.3:2005, AS/CA S042.4:2018, AS/NZS 4268:2017 FCC 47 CFR Part 15C (2017), FCC 47 CFR Part 2 (2017), FCC 47 CFR Part 22H (2017), FCC 47 CFR Part 24E (2017), FCC 47 CFR Part 27C (2017) RSS-Gen Issue 4 (2014), RSS-247 Issue 2 (2017), RSS-132 Issue 3 (2013), RSS-133 Issue 6 (2013), RSS-139 Issue 3, RSS-130 Issue 1

SAFETY

Standards	IEC 60950-1:2005 (Second Edition) + Am 1:2009 + Am 2:2013 AS/NZS 60950.1:2015 EN 50665:2017, EN 62311:2008 FCC 47 CFR Part 1 1.1310 RSS-102 Issue 5 (2015)

ENVIRONMENTAL

Ingress Protect	LST EN 60529:1999+A1+AC:2002
Vibration	Class guideline-DNVGL-CG-0339:2016 EN 60068-2-6:2008

HARDWARE INSTALLATION

1. Push the SIM holder button with the SIM needle.
2. Pull out the SIM holder.
3. Insert your SIM card into the SIM holder.
4. Slide the SIM holder back into the router.
5. Attach all antennas.
6. Connect the power adapter to the socket on the front of the device. Then plug the other end of the power adapter into a power outlet.
7. Connect to the device wirelessly using SSID and password provided on the device information label or use an Ethernet cable connected to LAN port.

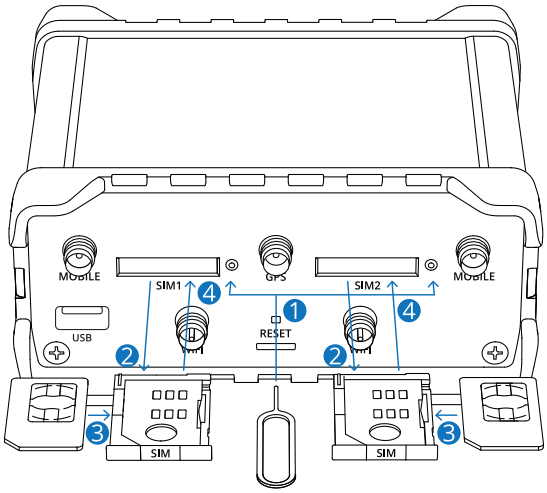

LOGIN TO DEVICE

1. To enter the router's Web interface (WebUI), type http://192.168.1.1 into the URL field of your Internet browser.
2. Use login information shown in image A when prompted for authentication.
3. After you log in, you will be prompted to change your password for security reasons. The new password must contain at least 8 characters, including at least one uppercase letter, one lowercase letter, and one digit. This step is mandatory, and **you will not be able to interact with the router's WebUI before you change the password.**
4. When you change the router's password, the Configuration Wizard will start. The Configuration Wizard is a tool used to set up some of the router's main operating parameters.
5. Go to the Overview page and pay attention to the Signal Strength indication (image B). To maximize the cellular performance try adjusting the antennas or changing the location of your device to achieve the best signal conditions.

A.

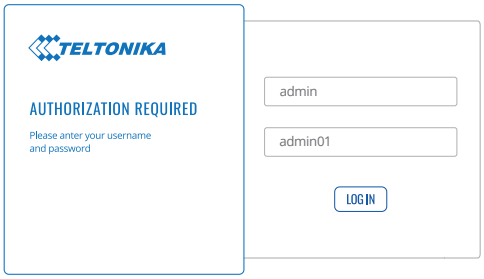

B.

TECHNICAL INFORMATION

Radio specifications	
RF technologies	2G, 3G, 4G, WiFi, GNSS
Max RF power	33 dBm@GSM, 24 dBm@WCDMA, 23 dBm@LTE, 20 dBm@ WiFi
	Bundled accessories specifications*
Power adapter	Input: 0.4A@100-240VAC, Output: 9VDC, 1A, 4-pin plug
Mobile antenna	698~960/1710~2690 MHz, 50 Ω, VSWR<3, gain** 3 dBi, omnidirectional, SMA male connector
WiFi antenna	2400~2483.5 MHz, 50 Ω, VSWR<2, gain** 5 dBi, omnidirectional, RP-SMA male connector
GNSS antenna	1575.42~1602 MHz, 2.2~5 VDC, VSWR<1.5, gain** 28 dB (typ.), RHCP polarization, SMA male connector

*Order code dependent.
**Higher gain antenna can be connected to compensate for cable attenuation when a cable is used. The user is responsible for the compliance with the legal regulations.

WHAT'S IN THE BOX?

STANDARD PACKAGE CONTAINS*

- Router RUT955
- 9 W PSU
- 2 x LTE antennas (magnetic mount, SMA male, 3 m cable)
- 2 x WiFi antennas (magnetic mount, RP-SMA male, 1.5 m cable)
- GNSS antenna (adhesive , SMA male, 3 m cable)
- RS485 connector block
- I/O connector block
- Ethernet cable (1.5 m)
- SIM Adapter kit
- RMS Flyer
- QSG (Quick Start Guide)
- Packaging box

 ROUTER RUT955	 9 W PSU	 2 X LTE ANTENNAS (MAGNETIC MOUNT, SMA MALE, 3 M CABLE)
 2 X WIFI ANTENNAS (MAGNETIC MOUNT, RP-SMA MALE, 1.5 M CABLE)	 GNSS ANTENNA (ADHESIVE , SMA MALE, 3 M CABLE)	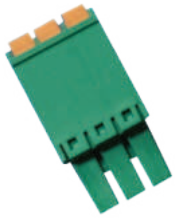 RS485 CONNECTOR BLOCK
 I/O CONNECTOR BLOCK	 ETHERNET CABLE (1.5 M)	 SIM ADAPTER KIT

* For all standard order codes standard package contents are the same, execpt for PSU.

STANDARD ORDER CODES

PRODUCT CODE	HS CODE	HTS CODE	PACKAGE CONTAINS
RUT955 T033B0	851762	8517.62.00	Standard package with Euro PSU
RUT955 K034S0	851762	8517.62.00	Standard package with US PSU
RUT955 J034S0	851762	8517.62.00	Standard package with US PSU
RUT955 W03660	851762	8517.62.00	Standard package with US PSU

For more information on all available packaging options – please contact us directly.

AVAILABLE VERSIONS

PRODUCT CODE	REGION (OPERATOR)	FREQUENCY
RUT955 0*****	Europe[1], the Middle East, Africa	• 4G (LTE-FDD): B1, B3, B5, B7, B8, B20 • 4G (LTE-TDD): B40 • 3G: B1, B5, B8 • 2G: B3, B8
RUT955 T*****	Europe[1], the Middle East, Africa, Korea, Thailand, India, Malaysia	• 4G (LTE-FDD): B1, B3, B7, B8, B20, B28A • 4G (LTE-TDD): B38, B40, B41 • 3G: B1, B8 • 2G: B3, B8
RUT955 H*****	Europe[1], the Middle East, Africa, Korea, Thailand, India, Malaysia	• 4G (LTE-FDD): B1, B3, B5, B7, B8, B20 • 4G (LTE-TDD): B38, B40, B41 • 3G: B1, B5, B8 • 2G: B3, B8
RUT955 J*****	North America (AT&T, Bell, T-Mobile)[1]	• 4G (LTE-FDD): B2, B4, B12 • 3G: B2, B4, B5
RUT955 K*****	North America (Verizon)	• 4G (LTE-FDD): B4, B13
RUT955 W*****	North America (AT&T/ Verizon/ T-mobile)	• 4G (LTE-FDD): B2, B4, B5, B12, B13, B14, B66, B71 • 3G: B2, B4, B5
RUT955 M*****	South America, Australia, New Zealand, Taiwan	• 4G (LTE-FDD): B1, B2, B3, B4, B5, B7, B8, B28 • 4G (LTE-TDD): B40 • 3G: B1, B2, B5, B8 • 2G: B2, B3, B5, B8
RUT955 P*****	Japan	• 4G (LTE-FDD): B1, B3, B8, B18, B19, B26 • 4G (LTE-TDD): B41 • 3G: B1, B6, B8, B19
RUT955 V*****	Global[1]	• 4G (LTE-FDD): B1, B2, B3, B4, B5, B7, B8, B12, B13, B18, B19, B20, B25, B26, B28 • 4G (LTE-TDD): B38, B39, B40, B41 • 3G: B1, B2, B4, B5, B6, B8, B19 • 2G: B2, B3, B5, B8
RUT955 Z*****	Europe[1], the Middle East, Africa, Korea, Thailand	• 4G (LTE-FDD): B1, B3, B7, B8, B20, B28A • 4G (LTE-TDD): B38, B40, B41 • 3G: B1, B8 • 2G: B3, B8

The price and lead-times for region (operator) specific versions may vary. For more information please contact us.
1 - Regional availability - excluding Russia & Belarus.

MOUNTING OPTIONS

DIN RAIL KIT

Parameter	Value
Mounting standard	35mm DIN Rail
Material	Low carbon steel
Weight	57g
Screws included	Philips Pan Head screw #6-32×3/16, 2pcs
Dimensions	82 mm x 46 mm x 20 mm
RoHS Compliant	V

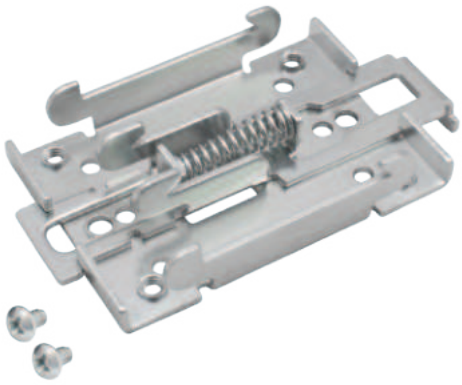

DIN RAIL KIT

- DIN Rail adapter
- Philips Pan Head screw #6-32×3/16, 2pcs for RUT2xx/RUT9xx

ORDER CODE	HS CODE	HTS CODE
PR5MEC00	73269098	7326.90.98

For more information on all available packaging options – please contact us directly.

COMPACT DIN RAIL KIT

Parameter	Value
Mounting standard	35mm DIN Rail
Material	ABS + PC plastic
Weight	6.5 g
Screws included	Philips Pan Head screw #6-32×3/16, 2pcs
Dimensions	70 mm x 25 mm x 14,5 mm
RoHS Compliant	V

DIN RAIL KIT

- Compact plastic DIN Rail adapter (70x25x14,5mm)
- Philips Pan Head screw #6-32×3/16, 2pcs

ORDER CODE	HS CODE	HTS CODE
PR5MEC11	73269098	7326.90.98

For more information on all available packaging options – please contact us directly.

SURFACE MOUNTING KIT

Parameter	Value
Mounting standard	Flat surface mount
Material	ABS + PC plastic
Weight	2x5 g
Screws included	Philips Pan Head screw #6-32×3/16, 2pcs
Dimensions	25 mm x 48 mm x 7.5 mm
RoHS Compliant	V

DIN RAIL KIT

- Surface mounting kit
- Philips Pan Head screw #6-32×3/16, 2pcs

ORDER CODE	HS CODE	HTS CODE
PR5MEC12	73269098	7326.90.98

For more information on all available packaging options – please contact us directly.

RUT955 SPATIAL MEASUREMENTS & WEIGHT

MAIN MEASUREMENTS

W x H x D dimensions for RUT955:

Device housing*:	110 x 50 x 100
Box:	355 x 60 x 175

*Housing measurements are presented without antenna connectors and screws; for measurements of other device elements look to the sections below.

TOP VIEW

The figure below depicts the measurements of RUT955 and its components as seen from the top:

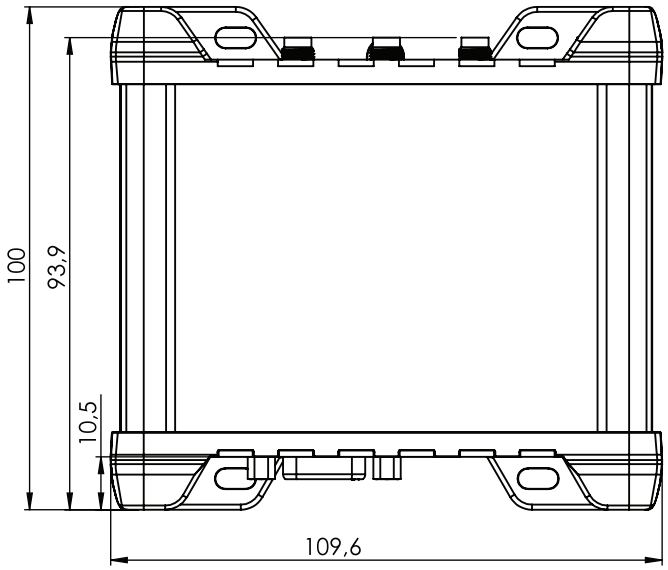

RIGHT VIEW

The figure below depicts the measurements of RUT955 and its components as seen from the right side:

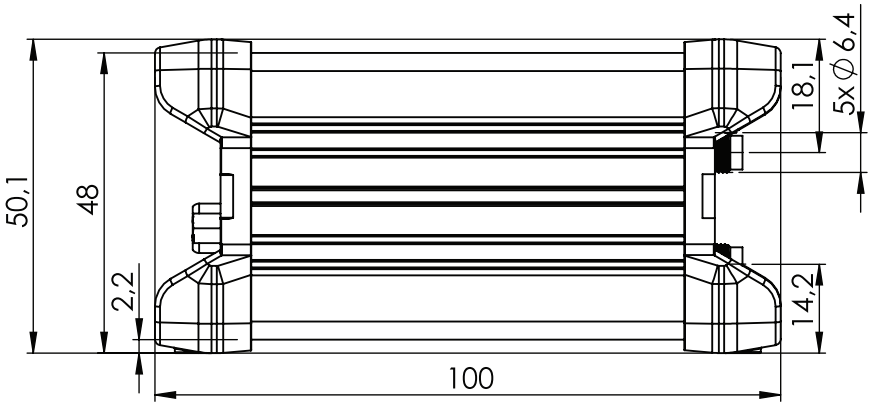

FRONT VIEW

The figure below depicts the measurements of RUT955 and its components as seen from the front panel side:

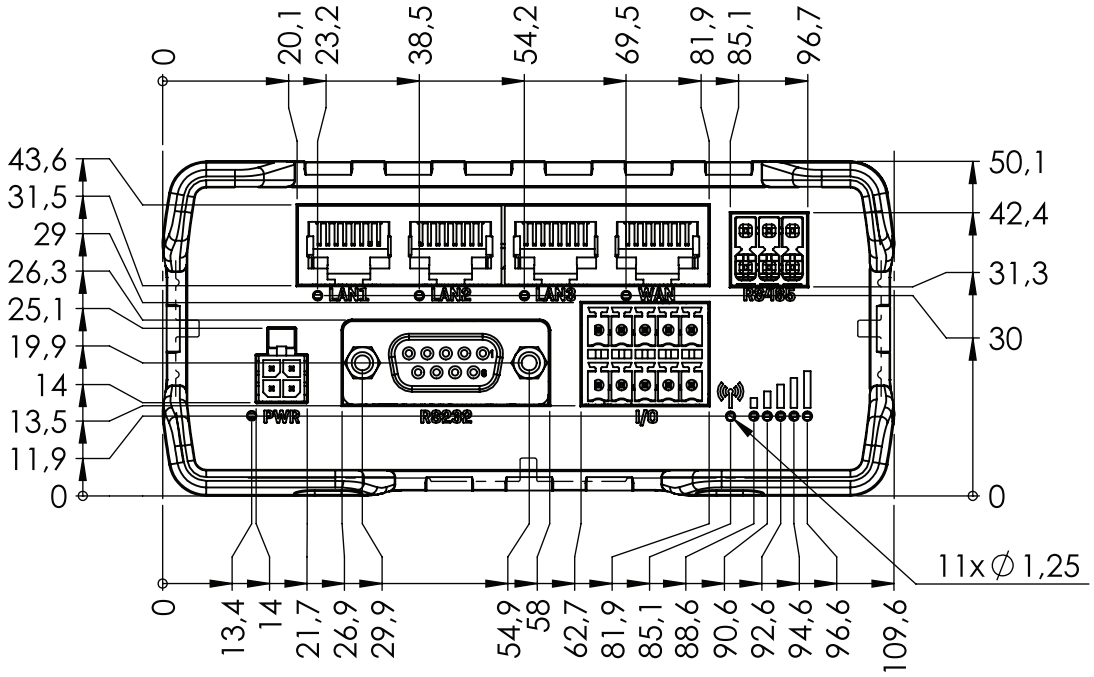

REAR VIEW

The figure below depicts the measurements of RUT955 and its components as seen from the back panel side:

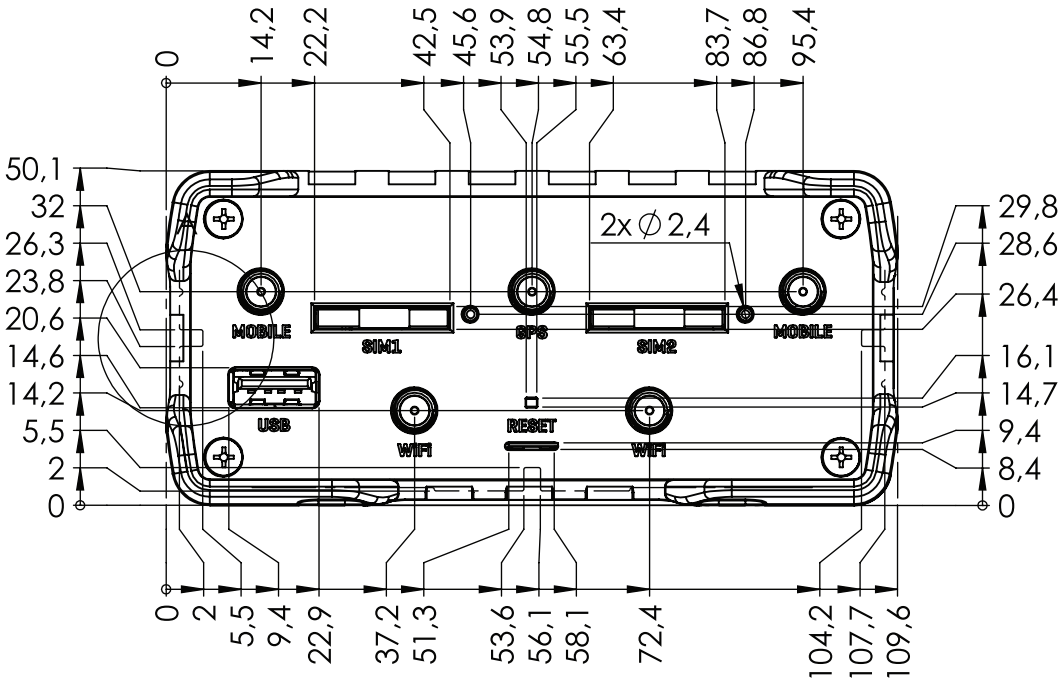

MOUNTING SPACE REQUIREMENTS

The figure below depicts an approximation of the device's dimensions when cables and antennas are attached:

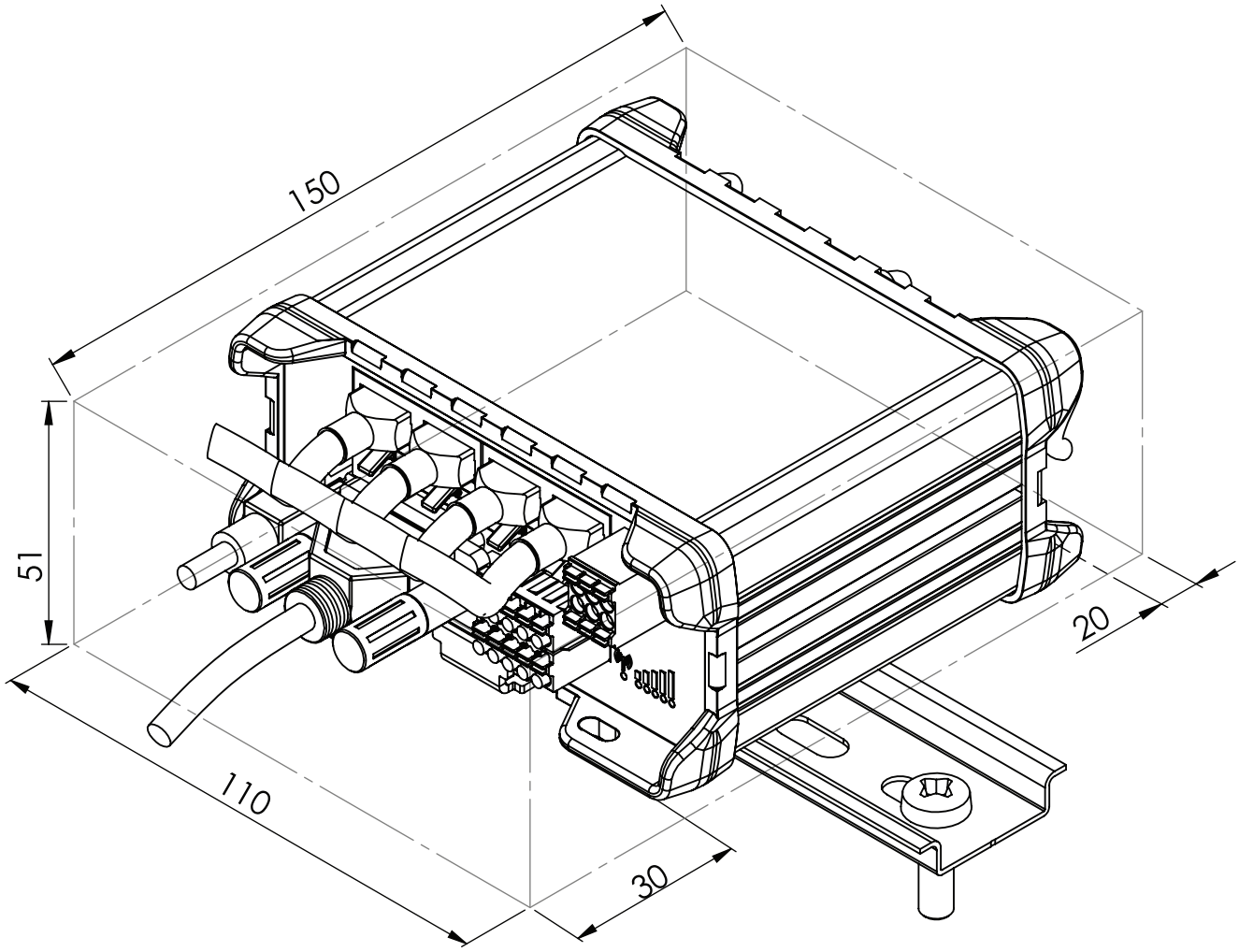

DIN RAIL

The scheme below depicts protrusion measurements of an attached DIN Rail:

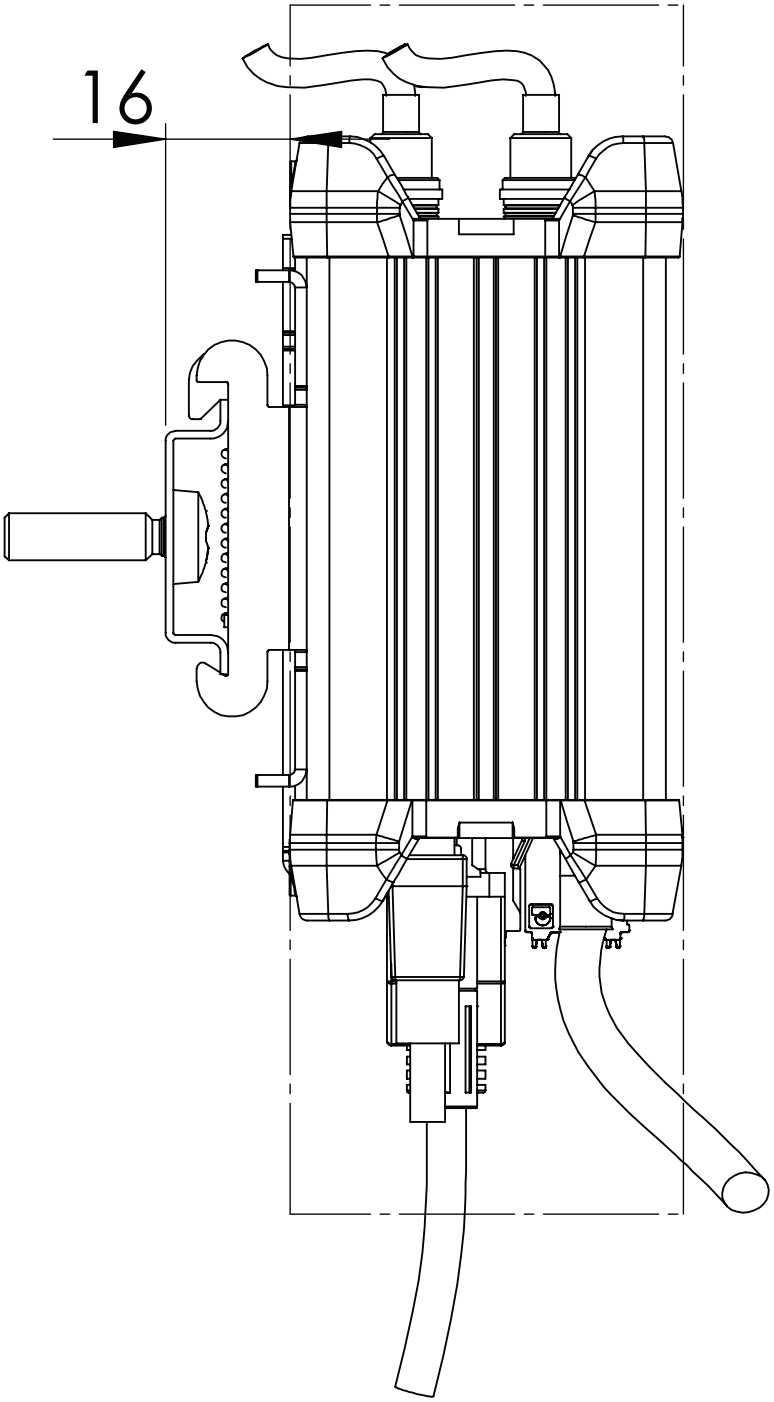

FISA TEHNICA E-GE
Grup electrogen

Nr Crt.	Specificațiile tehnice impuse prin Caietul de sarcini	Corespondența propunerii tehnice cu specificațiile tehnice impuse prin Caietul de sarcini	Producător
0	1	2	3
1.	**Parametrii tehnici şi functionali:** • Material carcasă : Metalic insonorizat; • Tensiune nominală: 400 Vca/50Hz; • Putere electrică minimă continuă (PRP): 25 kVA; • Carburant: gaz metan; • Consum carburant maxim: 10 Nmc/h; • Presiune gaz intrare : max 70 -300 mbar; • Temperatură mediu ambiant: -25° C ... + 55° C; • Unitatea de bază - carcasă de insonorizare minim IP 23; • Panou automat de comandă şi control grad IP54; • Tablou electric de transfer (ATS) inclus în furnitură; • Kit senzori pentru avertizare, protecţie şi afişare continuă a parametrilor; • Sistem încălzire combustibil / ulei pentru pornire la temperaturi scăzute; • Software PC pentru comunicare prin interfaţa RS 232/ RS 485; • Controller digital cu display; • Porturi de comunicaţie Ethernet şi RS485; • Modul de intrăriAeşiri (pe releu) programabile - minim 5 intrări şi 5 ieşiri. • LED exterior pentru verificarea rapidă a stării de funcţionare; **Motor** • În patru timpi, răcit cu lichid; • Cilindrii cu cămăşi de tip umed; • Putere motor: 19,8 kW; • Sistem pornire (starter) şi încărcare alternator 12Vcc; • Filtru de combustibil & ulei înlocuibile şi filtru de aer de tip uscat; • Radiator şi ventilator pentru răcire; • Tobă de eşapament din oţel cu clapetă de evacuare; • Baterie de pornire pe pat de şine şi cabluri; • Manual de operare şi scheme electrice; **Alternator** • Sincron, fără perii; • Clasa de izolaţie : H; • Tensiune: 400/230 V;	**Parametrii tehnici şi functionali:** • Material carcasă : Metalic insonorizat; • Tensiune nominală: 400 Vca/50Hz; • Putere electrică minimă continuă (PRP): 25 kVA; • Carburant: gaz metan; • Consum carburant maxim: 10 Nmc/h; • Presiune gaz intrare : max 70 -300 mbar; • Temperatură mediu ambiant: -25° C ... + 55° C; • Unitatea de bază - carcasă de insonorizare minim IP 23; • Panou automat de comandă şi control grad IP54; • Tablou electric de transfer (ATS) inclus în furnitură; • Kit senzori pentru avertizare, protecţie şi afişare continuă a parametrilor; • Sistem încălzire combustibil / ulei pentru pornire la temperaturi scăzute; • Software PC pentru comunicare prin interfaţa RS 232/ RS 485; • Controller digital cu display; • Porturi de comunicaţie Ethernet şi RS485; • Modul de intrăriAeşiri (pe releu) programabile - minim 5 intrări şi 5 ieşiri. • LED exterior pentru verificarea rapidă a stării de funcţionare; **Motor** • În patru timpi, răcit cu lichid; • Cilindrii cu cămăşi de tip umed; • Putere motor: 20 kW; • Sistem pornire (starter) şi încărcare alternator 12Vcc; • Filtru de combustibil & ulei înlocuibile şi filtru de aer de tip uscat; • Radiator şi ventilator pentru răcire; • Tobă de eşapament din oţel cu clapetă de evacuare; • Baterie de pornire pe pat de şine şi cabluri; • Manual de operare şi scheme electrice; **Alternator** • Sincron, fără perii; • Clasa de izolaţie : H; • Tensiune: 400/231 V;	AKSA

	• Frecventa: 50 Hz; • Cos q,: 0,8; **Sistem excitaţie: electronic** **Insonorizare** • Toate componentele sistemului de insonorizare sunt asamblate pe sistem modular; • Fără suduri; • Pe fiecare parte există uşi; • Toate componentele insonorizării realizate din metal; • Sistem de eşapare izolat termic cu clapetă de evacuare; • Buton pentru oprire de urgenta instalat in exterior; • design compact; • pornire, utilizare şi întreţinere uşoară; • fiecare grup este supus unei serii complexe de testări, care include testarea în sarcină maximă, testarea automatizării şi testarea sistemului de oprire de siguranţă; • regulator electronic de turaţie ; • pornire automată la căderea tensiunii în maxim 10s; • oprire automată la revenirea tensiunii electrice; • nivel zgomot maxim 66 dB; • afişare digitală a valorilor electrice; • afişare digitală a codurilor de eroare; • computer pentru gestionare funcţionare; • tablou electric încorporat (ATS) şi panou de comandă; • memorare alarme pentru minim 100 alarme; • emisie noxe măsurate conform SR ISO 8178-3 care să respecte nivelul maxim noxe conform Lege nr.104/2011 al Ministerului Apelor şi protecţia Mediului; • Programare săptămânală pentru a-şi face singur testul de funcţionare astfel încât aparatul să se menţină în condiţii optime; • întreruptor extern care permite închiderea lui imediată de către pompieri în caz de incendiu; • lateralele se desfac uşor (fără scule) astfel încât accesul în interior pentru mentenanţă să fie foarte facil; • grupul electrogen este montat pe un şasiu realizat din oţel. intre motor/alternator şi baza cadrului sunt amplasate tampoane amortizoare (impotriva vibratiilor)	• Frecventa: 50 Hz; • Cos q: 0,8; **Sistem excitaţie: electronic** **Insonorizare** • Toate componentele sistemului de insonorizare sunt asamblate pe sistem modular; • Fără suduri; • Pe fiecare parte există uşi; • Toate componentele insonorizării realizate din metal; • Sistem de eşapare izolat termic cu clapetă de evacuare; • Buton pentru oprire de urgenta instalat in exterior; • design compact; • pornire, utilizare şi întreţinere uşoară; • fiecare grup este supus unei serii complexe de testări, care include testarea în sarcină maximă, testarea automatizării şi testarea sistemului de oprire de siguranţă; • regulator electronic de turaţie ; • pornire automată la căderea tensiunii în maxim 10s; • oprire automată la revenirea tensiunii electrice; • nivel zgomot maxim 66 dB; • afişare digitală a valorilor electrice; • afişare digitală a codurilor de eroare; • computer pentru gestionare funcţionare; • tablou electric încorporat (ATS) şi panou de comandă; • memorare alarme pentru minim 100 alarme; • emisie noxe măsurate conform SR ISO 8178-3 care să respecte nivelul maxim noxe conform Lege nr.104/2011 al Ministerului Apelor şi protecţia Mediului; • Programare săptămânală pentru a-şi face singur testul de funcţionare astfel încât aparatul să se menţină în condiţii optime; • întreruptor extern care permite închiderea lui imediată de către pompieri în caz de incendiu; • lateralele se desfac uşor (fără scule) astfel încât accesul în interior pentru mentenanţă să fie foarte facil; • grupul electrogen este montat pe un şasiu realizat din oţel. intre motor/alternator şi baza cadrului sunt amplasate tampoane amortizoare (impotriva vibratiilor)	
2.	**Specificaţii de performanţă şi condiţii privind siguranta în exploatare:**	**Specificaţii de performanţă şi condiţii privind siguranta în exploatare:**	

	- Borne sus şi jos cu cap fix şi bridă culisantă: - Posibilitatea montării ulterioare a accesoriilor; - Protectia terminalelor la atingere cu mână.	- Borne sus şi jos cu cap fix şi bridă culisantă: - Posibilitatea montării ulterioare a accesoriilor; - Protectia terminalelor la atingere cu mână.	
3.	**Conditii privind conformitatea cu standarde relevante:** • normele fabricantului trebuie sa fie echivalente si nu doar corespunzatoare cu unul din standardele ISO, ANSI, IEC, DIN	**Conditii privind conformitatea cu standarde relevante:** • normele fabricantului trebuie sa fie echivalente si nu doar corespunzatoare cu unul din standardele ISO, ANSI, IEC, DIN	
4.	**Condiţii de garanţie şi postgaranţie:** • Termen de garanţie min 2 ani de la data montării, dar nu mai mult de 3 ani de la livrare.	**Condiţii de garanţie şi postgaranţie:** • Termen de garanţie min 2 ani de la data montării, dar nu mai mult de 3 ani de la livrare.	
5.	**Condiţii cu caracter tehnic:** Nu vor fi luate în consideraţie decât ofertele însoţite de documentaţie completă pentru selecţie şi montaj în limba română. Vor fi anexate: - catalog, broşură , manual, desene, prospecte; - instrucţiuni de montaj (scheme de conectare, broşuri, cataloage); - instrucţiuni de exploatare; - buletine de încercări, verificări, probe; - declaratie de conformitate.	**Condiţii cu caracter tehnic:** Nu vor fi luate în consideraţie decât ofertele însoţite de documentaţie completă pentru selecţie şi montaj în limba română. Vor fi anexate: - catalog, broşură , manual, desene, prospecte; - instrucţiuni de montaj (scheme de conectare, broşuri, cataloage); - instrucţiuni de exploatare; - buletine de încercări, verificări, probe; - declaratie de conformitate.	

Introduction

Aksa power generation system, providing optimum performance, and reliability, for stationary standby, prime power, and continuous duty applications. All generator sets are factory build, and production tested.

Power

3 Phase,50 Hz, PF 0.8

Voltage (V)	STANDBY RATING (ESP)		PRIME RATING (PRP)		STANDBY CURRENT (A)
	kW	kVA	kW	kVA	
400 / 231	20.0	25			36

STANDBY RATING (ESP) Applicable for supplying power to varying electrical load for the duration of power interruption of a reliable utility source. ESP is in accordance with ISO 8528-1. Overload is not allowed.

PRIME RATING (PRP) Applicable for supplying power to varying electrical load for unlimited hours. PRP is in accordance with ISO 8528-1. 10 % overload capability is available for a period of 1 hour within 12-hour period of operation.

General Characteristics

Model Name	APG 25
Frequency (Hz)	50
Fuel Type	Natural Gas
Engine Make and Model	PSI 2.4L NA
Alternator Make and Model	Mecc Alte ECP 28-L/4 C
Control Panel Model	DSE 6120
Canopy	AUL3

Engine Specifications

General Data

Manufacturer	PSI
Engine Model	2.4L NA
Number of Cylinders / Type	4 cylinders - in line
Bore mm (in)	3,4 (86,5)

Manufacturer reserves the right to make changes in model, technical specifications, color, equipment and accessories without prior notice. 01/10/2024

Stroke mm (in)	100 (3,93)
Displacement l (cu. In)	2,4 (143,5)
Compression Ratio	9.5:1
Engine Speed (rpm)	1500
Standby Power (kW/hp)	26 (34,8)
Block Heater (QTY)	1
Block Heater Power (Watt)	500
Governor System	ECU
Air Filter	Dry Type
Aspiration	Naturally Aspirated

Lubrication System

Oil Capacity l (qal)	4,25
Max. Oil Temperature ºC (F)	121 (250)

Fuel System

Fuel Type	Natural Gas
Injection Type	Spark-Ignited
Type of Fuel Pump	-

Electrical System

Operating Voltage (Vdc)	12 Vdc
Battery and Capacity (Qty/Ah)	1 /55

Cooling System

Cooling Method	Water Cooled

Exhaust System

Exhaust Gas Flow (m^3/min)	5,9

Radiator

Total Coolant Capacity (l)	10,5
Cooling Fan Air Flow m^3/min (ft^3/min)	108

Fuel Consumption

Fuel Cons. @100% Prime Load m3/h (kg/h)	8 (5,7)

Alternator Characteristics

Manufacturer	Mecc Alte
Alternator Model	ECP 28-L/4 C
Frequency (Hz)	50

Power (kVA)	25
Voltage (V)	400
Phase	3
A.V.R.	DSR
Voltage Regulation	1
Insulation Class	H
Protection Class	IP23
Rated Power Factor	0.8
Weight Complete Generator (kg)	121.9
Temperature Rise Class	H
Cooling Air (m³/min)	6.6

Open Generator Set Dımensıons

Length mm (ft)	2278 (7,5)
Width mm	1063 (3,5)
Height mm (ft)	1404 (4,6)

Canopy Characteristics

Length mm (ft)	2274 (90)
Width mm (ft)	1062 (42)
Height mm (ft)	1307 (52)

Control Panel

Manufacturer	DSE
Control Module Model	DSE 6120
Communication Ports	CANBUS

1. Menu navigation buttons
2. Close mains button
3. Main Status and instrumentation display
4. Alarm LED's
5. Close generator button
6. Status LED's
7. Operation selecting buttons

Standard Devices

DSE model 6120, Auto Mains Failure control module, Static battery charger input 198-264 volt, output 27,6V 5A (24V) or 13,8 Volt 5A (12V), fuses for control circuits. This Control Module is suitable for a wide variety of single gen-set applications

Control Unit

- The DSE 6120 module has been designed to monitor generator frequency, volt, current, engine oil pressure, coolant temperature running hours and battery volts.
- Module monitors the mains supply and control the switch over to the generator when the mains power fails.
- The DSE6120 also indicates operational status and fault conditions, Automatically shutting down the Gen. Set and giving true first up fault condition of Gen. Set failure.The LCD display indicates the fault.

Construction and Finish

Components installed in sheet steel enclosure. Phosphate chemical, pre-coating of steel provides corrosion corrosion-resistant surface. Polyester composite powder topcoat forms a high gloss and extremely durable finish. Lockable and hinged panel door provides easy access to components.

Installation

Control panel is mounted on baseframe with steel stand. Located at the right side of the generator set (When you look at the Gen.Set. from Alternator side)

Engine

- Engine speed
- Oil pressure
- Coolant temperature
- Run time
- battery volts
- Configurable timing

Shut Down

- Fail to start
- Emergency stop
- Low oil pressure
- High coolant temperature
- Over /Under speed
- Under/over generator frequency
- Under/over generator voltage
- Oil pressure sensor open
- Coolant temperature sensor open

Warnings

- Charge failure
- Battery Low/High voltage
- Fail to stop.
- Low /High generator voltage
- Under /Over generator frequency
- Over /Under speed
- Low oil pressure
- High coolant temperature

Generator

- Voltage (L-L, L-N)
- Current (L1-L2-L3)
- Frequency
- Gen. Set ready
- Gen. Set enabled

Electrical Trip

- Generator over current

Mains

- Mains ready
- Mains enabled

Options

- Flexible sensor can be controlled with temperature, pressure, percentage (warning/shutdown/electrical trip)
- Local setting parameters and monitoring from PC to control

Control Panel Compliance List

- Electrical Safety / Electro Magenetic Compatibility (EMC)
- BS EN 60950 Electrical Safety
- BS EN 61000-6-2 EMC Generic Immunity Standard

module with USB connection (max 6 mt).

- BS EN 61000-6-4 EMC Generic Emission Standard

Static Battery Charger

- Battery charger is manufactured with switching-mode and SMD technology and ıt has high efficiency.
- Battery charger models' output V-I characteristic is very close to square and output is 5 amper, 13,8 V for 12 volt and 27,6 V for 24 V . Input 198 - 264 volt AC.
- The charger is fitted with a protection diode across the output.
- Connect charge fail relay coil between positive output and CF output.
- They are equipped with RFI filter to reduce electrical noise radiated from the device.
- Galvanically isolated input and output typically 4kV for high reliability.

Standard Equipment

- Water cooled, gas engine
- Radiator with mechanical fan
- Protective grille for rotating and hot parts
- Electric starter and charge alternator
- Starting battery (with lead acid) including rack and cables
- Engine coolant heater
- Base frame design incorporates an anti-vibration isolators
- Flexible fuel connection hoses
- Single bearing, class H alternator
- Industrial exhaust silencer and steel bellows supplied separately(for open sets)
- Static battery charger
- Manual for application and installation

Aksa Certificates

Directive

- 2006/42/EC : Machinery Safety Directive
- 2004/108/EC : Electromagnetic Compatibility Directive
- 2006/95/EC : Low Voltage Directive

Standarts

- EN ISO 8528-13:2016 : Reciprocating internal combustion engine-driven alternating current generating sets- Part:13: Safety

- Max load and overload ratings based on ISO 3046 gross flywheel power.
- Technical data based on ISO 3046-1 standards of 77°F(25°C), 14,5Psia (100kPa) and 30% relative humidity.
- Production tolerances in engines and installed components can account for power variations of ± 5%. Altitude, temperature and excessive exhaust and intake restrictions should be applied to power calculations.
- All fuel and thermal calculations unless otherwise noted are done at ISO 3046 rated load using LHV for NG of 48,17 MJ/kg.
- At 0,5 in-H2O of Package Restriction at STP
-Volume calculated using density of 0,717 kg/m3 for NG and 0,51 kg/L for LPG

ComAp
The heart of smart control

InteliLite 4 AMF 8

Order code: IL4AMF8XBAA

Controller for single gen-set applications

Datasheet

Product description

- Single Gen-set controller for stand-by and prime-power applications
- All-in-one intuitive & powerful PC tool for configuration/monitoring/control, locally or remotely
- Easy to install, configure and use

Key features

- Stand-by and prime-power application in one unit
- 6 binary outputs, 6 + 1 binary inputs, 3 analog inputs (U/I/R)
- +5 V output reference for analog inputs
- 2 high-current E-Stop binary outputs
- 1 slot for extension plug-in module (Modbus, Internet, SMS, inputs/outputs)
- Extension CAN modules
- ECU support (Tier 4 Final, Stage V)
- RTC with battery back-up (full calendar)
- Power over USB for controller configuration
- Zero power mode
- True RMS measurement
- In-built PLC, complemented with a PLC monitoring tool in InteliConfig
- Full remote communications support (AirGate 2.0, WSV)
- Internet access using Ethernet / 4G, Modbus TCP/RTU, SNMP v1/v2c
- Active SMS and emails
- Detailed history log with up to 150 records
- Remote display
- User setpoints and protections
- 5 languages in the controller & Translator functionality
- User Access Management
- Cyber security improvement
- Alternative configurations
- Multi-purpose schedulers
- 3 maintenance timers
- Modbus register mapping possibility
- Fuel pump management
- Run Hours source selector
- Cut-out: 172 × 112 mm

Application overview

AMF
Mains & Generator Circuit Breaker

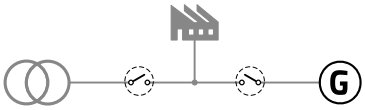

MRS
Generator Circuit Breaker

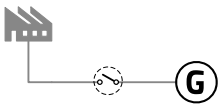

Dimensions, terminals and mounting

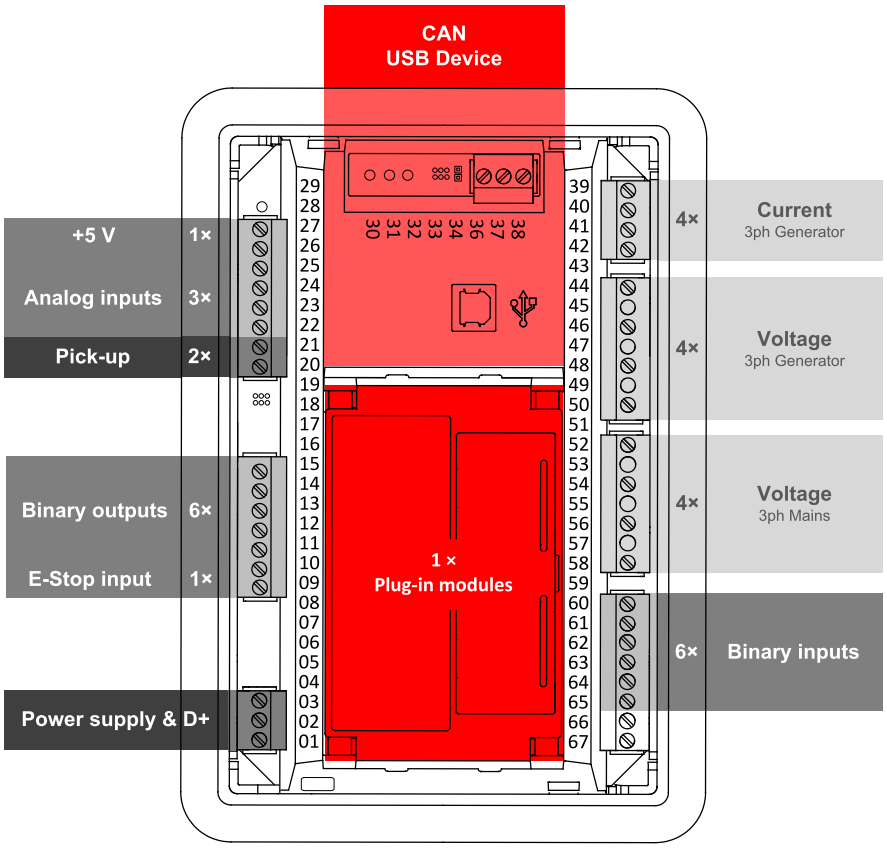

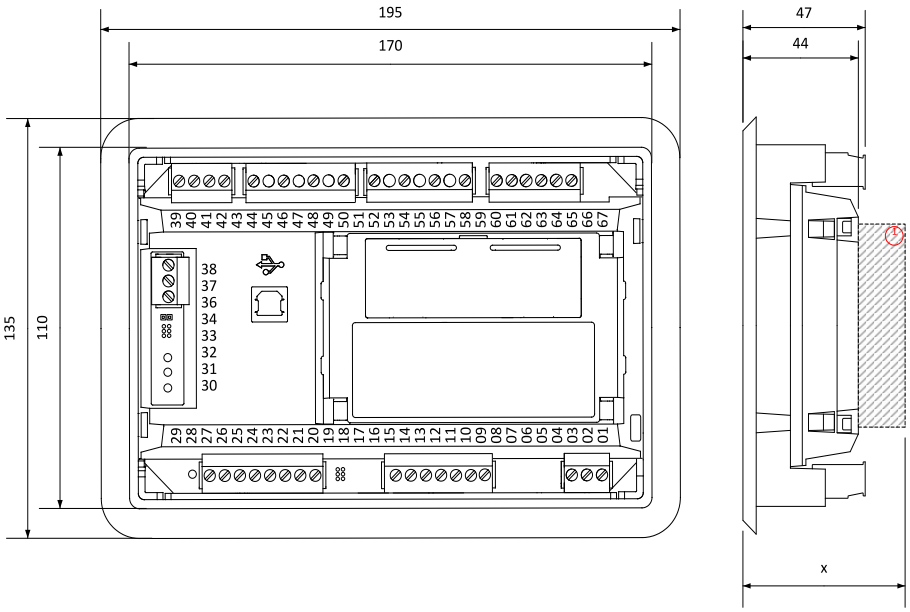

Note: *The final depth of the controller depends on the selected plug-in module – it can vary between 41 mm and 56 mm. Mind also the size of connectors and cables (e.g. in case of RS232 connector, add about 60 mm more for standard RS232 connector and cable).*

Note: *The controller is to be mounted into panel doors as a standalone unit using provided holders. The requested cutout size is 172 × 112 mm. Use the screw holders delivered with the controller to fix the controller into the door.*

Technical data

Power supply

Power supply range	8-36 VDC
Power consumption (without modules)	2.5 W
RTC battery	Replaceable (3 V)
Fusing power	4 A w/o BOUT consumption
E-Stop fusing	10 A
Max. Power Dissipation	7 W

Operating conditions

Protection degree (front panel)	IP 65
Operating temperature	-20 ˚C to +70 ˚C
Storage temperature	-30 ˚C to +80 ˚C
Operating humidity	95 % non-condensing (EN 60068-2-30)
Vibration	5-25 Hz, ± 1.6 mm 25-100 Hz, a = 4 g
Shocks	a = 500 m/s^2
Surrounding air temperature rating 70 °C Suitable for pollution degree 2	

D+

Max. output current	250 mA
Charging fail threshold	Adjustable

Voltage measurement

Measurement inputs	3ph-n Gen voltage , 3ph-n Mains
Measurement range	10-277 V AC / 10-480 V AC (EU) 10-346 V AC / 10-600 V AC (US/Canada)
Linear measurement and protection range	350 V AC Ph-N 660 V AC Ph-Ph
Accuracy	1 %
Frequency range	30-70 Hz (accuracy 0.1 Hz)
Input impedance	0.72 MΩ ph-ph , 0.36 MΩ ph-n

Display

Type	Build-in monochromatic 3.2"
Resolution	132 × 64 px

Communications

USB Device	Non-isolated type B connector
CAN 1	Non-isolated, 250 / 50 kbps, Terminator impedance 120 Ω

Current measurement

Measurement inputs	3ph Gen current
Measurement range	5 A
Max. allowed current	10 A
Accuracy	±20 mA for 0-2 A; 1 % of value for 2-5 A
Input impedance	<0.1 Ω

E-Stop

Dedicated terminal for safe E-Stop input. Physical supply for binary outputs 1 & 2.

Binary inputs

Number	6
Close/Open indication	0-2 VDC close contact 6-36 VDC open contact

Binary outputs

Number	6
Max. current	BO1,2 = 5 A; BO3-6 = 0.5 A
Switching to	positive supply terminal

Analog inputs

Number	3, switchable (R/U/I)
Range	R = 0-2500 Ω; U = 0-10 V; I = 0-20 mA
Accuracy	R: ±2 % from value ±5 Ω in range 0-250 Ω R: ±4 % from value in range 250 Ω-2500 Ω U: 1 % from value ±100 mV I: 1 % from value ±0.2 mA

+5 V Power supply output

Max. current	45 mA

Magnetic pickup

Voltage input range	4 Vpk-pk to 50 Vpk-pk in range 4 Hz to 1 kHz 6 Vpk-pk to 50 Vpk-pk in range 1 to 5 kHz 10 Vpk-pk to 50 Vpk-pk in range 5 to 10 kHz
Frequency input range	4 Hz to 10 kHz
Frequency measurement tolerance	0.2 % from measured value

Available plug-in modules

Product	Description	Order code
CM-RS232-485	Dual port interface	CM223248XBX
CM2-4G-GPS	4G & GPS plug-in communication module	CM24GGPSXBX
CM3-Ethernet	Internet / Ethernet plug-in communication module	CM3ETHERXBX
EM-BIO8-EFCP	8 additional binary inputs/outputs	EM2BIO8EXBX

Note: *Controller has 1 slot for plug-in modules.*

Available CAN modules

Product	Description	Order code
IGL-RA15	CAN remote annunciator with 15 LEDs	EM2IGLRABAA
Inteli AIN8	CAN module with 8 analog inputs	I-AIN8
Inteli IO8/8	CAN module with 8 binary inputs and 8 binary outputs	I-IO8/8
IGS-PTM	CAN module with 8 binary inputs, 8 binary outputs, 4 analog inputs and 1 analog output	IGS-PTM
Inteli AIN8TC	CAN module with 8 analog inputs dedicated for thermocouple sensors only.	I-AIN8TC
Inteli AIO9/1	CAN module with analog inputs and outputs – designed for DC measurement.	I-AIO9/1

Functions and protections

Support of functions and protections as defined by ANSI (American National Standards Institute):

Description	ANSI code	Description	ANSI code
Master unit	1	**Incomplete sequence relay**	48
Stopping device	5	**Overcurrent**	50/50TD
Multifunction device	11	**Breaker failure**	50BF
Underspeed	14	**Overvoltage**	59
Overspeed	12	**Aux Over Voltage**	59X
Starting-to-running transition contactor	19	**Pressure switch**	63
Thermal relay	26	**Liquid level switch**	71
Undervoltage	27	**Alarm relay*** **	74
Aux Battery Under Voltage	27X	**Reclosing relay**	79
Annunciator	30	**Overfrequency**	81O
Overload (real power)	32P	**Underfrequency**	81U
Master sequence device	34	**Auto selective control/transfer**	83
Negative sequence voltage	47		

*** extension module IGL-RA15 required

Certifications and standards

- EN 61000-6-2
- EN 61000-6-4
- EN 61010-1
- EN 60068-2-1 (-20 °C/16 h)
- EN 60068-2-2 (70 °C/16 h)
- EN 60068-2-6 (2÷25 Hz / ±1,6 mm; 25÷100 Hz / 4.0 g)
- EN 60068-2-27 (a=500 m/s^2; T=6 ms)
- EN 60068-2-30:2005 25/55°C, RH 95%, 48hours
- EN 60529 (front panel IP65, back side IP20)
- UL 6200

CM-RS232-485 Quick Guide

CM-RS232-485 is optional plug-in card to enable InteliLite the RS232 and RS485 communication. This is required for computer or MODBUS connection. The CM-RS232-485 is a dual port module with RS232 and RS485 interfaces at independent COM channels. The RS232 is connected to COM1 and RS485 to COM2.

Image 1.1 CM-RS232-485 interface

> **IMPORTANT: Any manipulation with plug-in module shall be done with disconnected power supply to controller.**

Firmware upgrade

- Download the newest FW of module from ComAp website (in form of PSI file or installation package)
- Instal package to computer or open PSI to instal it into LiteEdit
- Plug the module into the controller and power the controller on.
- Open a connection with controller via LiteEdit
- Go the menu Tools -> Firmware upgrade, select the Plug-in modules tab and select the appropriate firmware you want to program into the module (in LiteEdit).
- Press the OK button to start upgrade of firmware.

The firmware update process may be performed via any kind of connection including connection via the same module in which the firmware is to be updated. The connection is reestablished again automatically when the update process is finished.

Note: *For more information see InteliLite Global Guide on www.comap.cz.*

Plug-in module installation

Remove the back cover. To do this, press four holders which are located in corners.

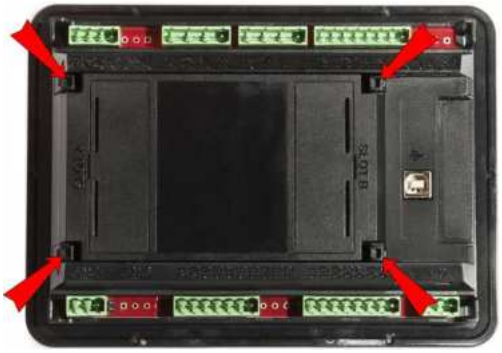

After removing back cover insert the plug-in module. Plug-in module has to be inserted under holders. Start with holders market by symbol 1. On the controller are also narrows for better navigation. After inserting plug-in module under holders 1 press it down to holders market by symbol 2 which lock the module.

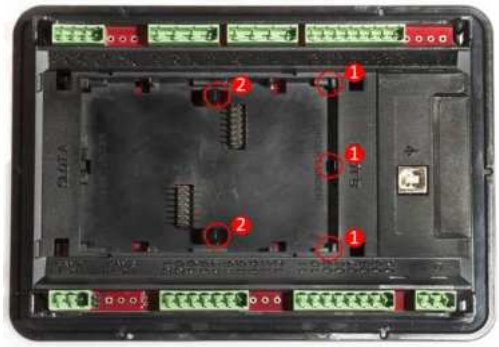

Insert the plug-in module under holders marked by symbol 1. Then insert the plug-in module under holders marked by symbol 2.

After locking the plug-in module into holders, place back the back cover (small cover for connectors has to be removed from back cover). Finally insert the small cover for connectors. Small covers are unique for each plug-in module.