0	1	2	3	4	5	6	7	8	9

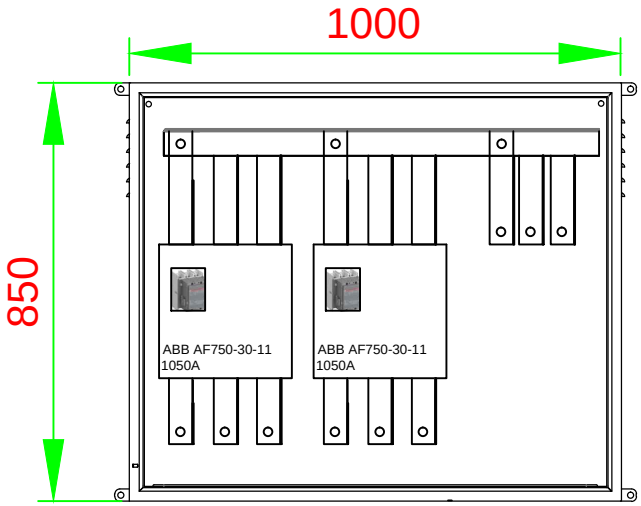

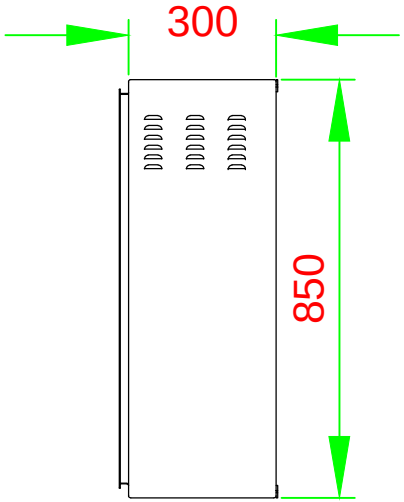

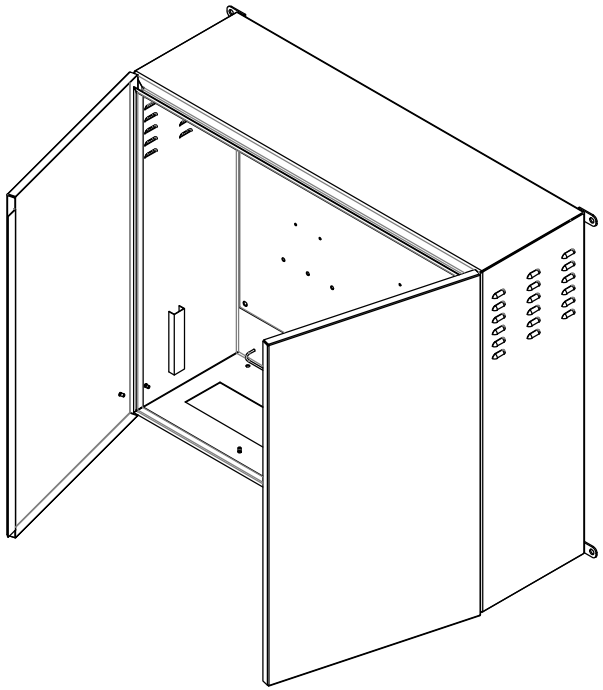

DATE	24.07.2020	NAME	COMPANY	PROJECT	DESCRIPTION
DRAWING		GÜRHAN KARADELİ	alimar Mak.san.tic. aş Tel:0312 354 59 48 ANKARA	725 KVA 3P AUTOMATIC GENSET	TRANSFER PANEL
CHECKED		RIDVAN KARABULUT			
PAGE	1				