Digitally signed by Rotari Dmitrii
Date: 2024.10.18 13:16:11 MSK
Reason: MoldSign Signature
Location: Moldova
17/10/2024
MOLDOVA EUROPEANĂ

Schréder
Experts in lightability™

VITALUM 1

5424

Optic	5424
Photometry Type	Narrow
Protector	Flat glass
Source	24 Seoul 5050
Matrix	575382

Characteristics

Length (mm)	Width (mm)	Height (mm)	Weight (kg)	Tightness level*	Impact resistance*	Electrical class*	CxS (m²)
307	207	80	2.9	IP 66	IK 08	I EU, II EU	0.036

** According to IEC-EN60598 and IEC-EN62262*

Features

Highly energy-efficient luminaire with the best total cost of ownership

- HiFlex™ photometric engine designed for optimised energy efficiency
- Easy installation
- High efficiency with low operating costs
- Supplied pre-wired to facilitate installation (optional quick-on connectors)
- Connected-ready for your future Smart city requirements

Types of application

- Square and park
- Bridge
- Car park
- Road and highway
- Train station
- Bike path

Information for 1000 lm matrix

Efficacy (%)	81.9
DLOR (%)	81.9
ULOR (%)	0.0
ULR (%)	0.0
Incl ULR 4%	-45/42°

G Class (EN 13201-2)	G6
G* (EN 13201 2015)	G*4
Imax (cd)	439
Aperture 0-180°	74 - 74
Aperture 90-270°	39 - 11

I 70-80-90-95 (cd)	314 - 38 - X - X
CIE flux code N 1→5 (%)	45.0 - 80.8 - 98.5 - 100.0 - 81.9
Gradient 90°	18cd
Gradient 270°	7cd

Photometrical characteristics

LED count	Colour code	Current (mA)	Luminaire power (W)	Source flux (lm)	Luminaire output flux (lm)	Luminaire efficacy (lm/W)	Peak (cd)	BUG Rating	Voltage (V)
			Ambient temp = 25°						
24	NW 740	67	11	1885	1543	140	827	B1 U0 G1	230
24	NW 740	117	18	3251	2661	148	1427	B1 U0 G1	230
24	NW 740	133	20	3699	3028	151	1624	B1 U0 G1	230
24	NW 740	167	25	4563	3735	156	2003	B1 U0 G1	230
24	NW 740	200	30	5400	4420	147	2370	B1 U0 G1	230
24	NW 740	233	35	6210	5083	145	2726	B2 U0 G1	230
24	NW 740	267	41	6993	5724	143	3070	B2 U0 G1	230
24	NW 740	300	46	7744	6339	138	3399	B2 U0 G1	230
24	NW 740	350	53	8829	7227	139	3876	B2 U0 G2	230
24	WW 722	67	11	1491	1220	111	654	B1 U0 G0	230
24	WW 722	117	18	2572	2105	117	1129	B1 U0 G1	230
24	WW 722	133	20	2926	2395	120	1285	B1 U0 G1	230
24	WW 722	167	25	3610	2955	123	1585	B1 U0 G1	230
24	WW 722	200	30	4272	3497	117	1875	B1 U0 G1	230
24	WW 722	233	35	4913	4021	115	2157	B1 U0 G1	230
24	WW 722	267	41	5532	4529	113	2428	B2 U0 G1	230
24	WW 722	300	46	6126	5015	109	2689	B2 U0 G1	230
24	WW 722	350	53	6985	5717	110	3066	B2 U0 G1	230
24	WW 727	67	11	1684	1378	125	739	B1 U0 G0	230
24	WW 727	117	18	2904	2377	132	1275	B1 U0 G1	230
24	WW 727	133	20	3304	2705	135	1451	B1 U0 G1	230
24	WW 727	167	25	4076	3337	139	1789	B1 U0 G1	230
24	WW 727	200	30	4824	3949	132	2118	B1 U0 G1	230
24	WW 727	233	35	5548	4541	130	2435	B2 U0 G1	230
24	WW 727	267	41	6247	5114	128	2742	B2 U0 G1	230
24	WW 727	300	46	6918	5663	123	3037	B2 U0 G1	230
24	WW 727	350	53	7887	6456	124	3462	B2 U0 G1	230
24	WW 730	67	11	1751	1433	130	768	B1 U0 G1	230
24	WW 730	117	18	3020	2472	137	1326	B1 U0 G1	230
24	WW 730	133	20	3436	2813	141	1508	B1 U0 G1	230
24	WW 730	167	25	4239	3470	145	1861	B1 U0 G1	230
24	WW 730	200	30	5016	4106	137	2202	B1 U0 G1	230
24	WW 730	233	35	5768	4722	135	2532	B2 U0 G1	230
24	WW 730	267	41	6496	5317	133	2851	B2 U0 G1	230
24	WW 730	300	46	7193	5888	128	3157	B2 U0 G1	230
24	WW 730	350	53	8201	6713	129	3600	B2 U0 G2	230

Tolerance on flux +- 7% - Tolerance on power +- 5%

Hypergon view

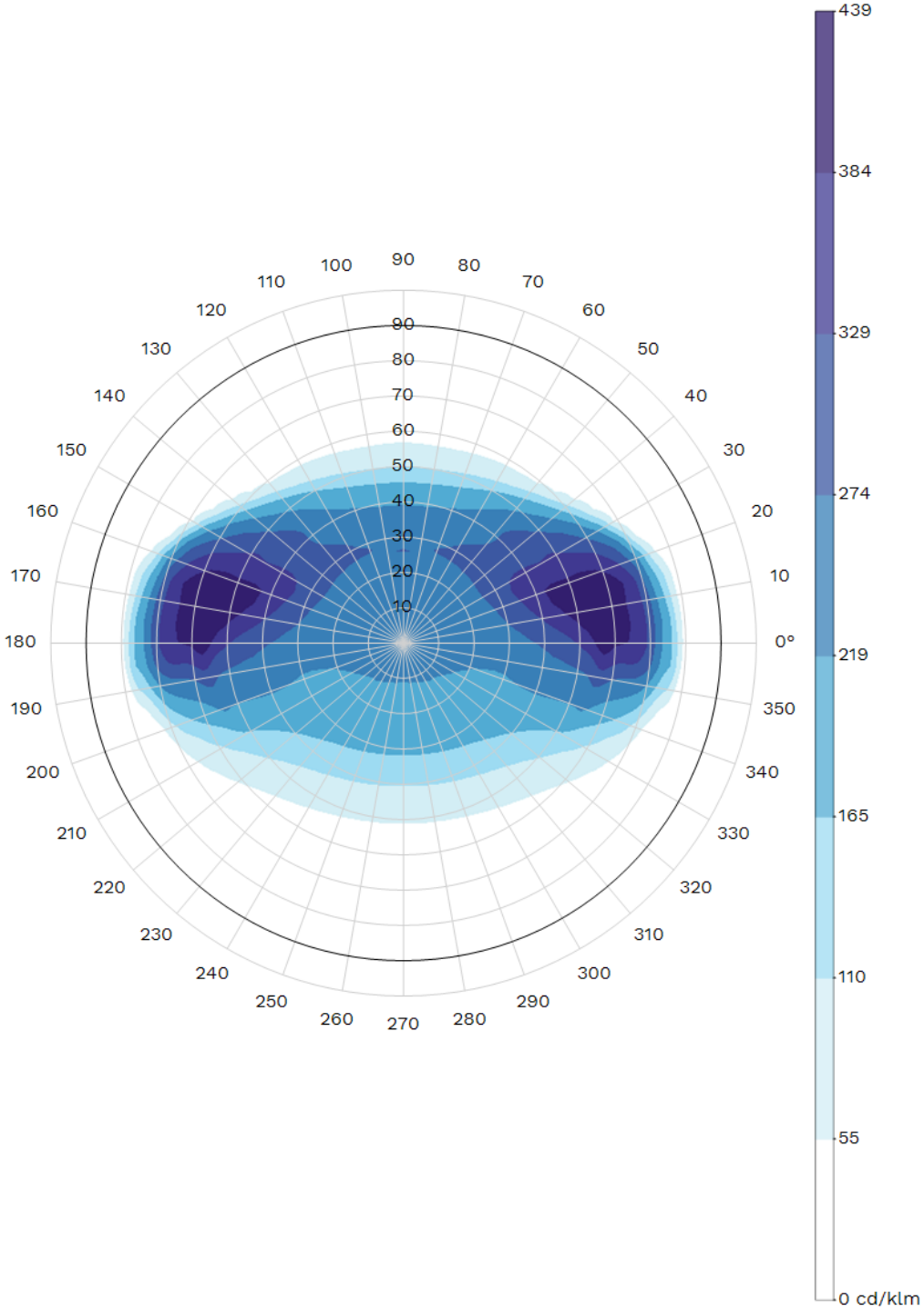

Schréder

Polar/Cartesian diagram

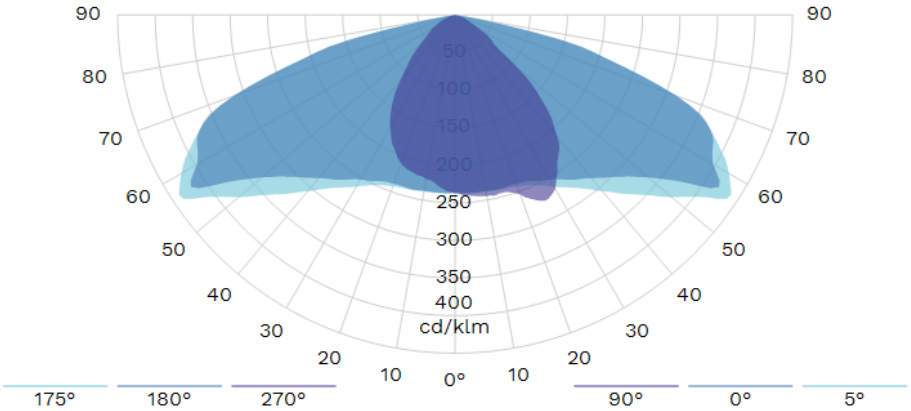

Isolux

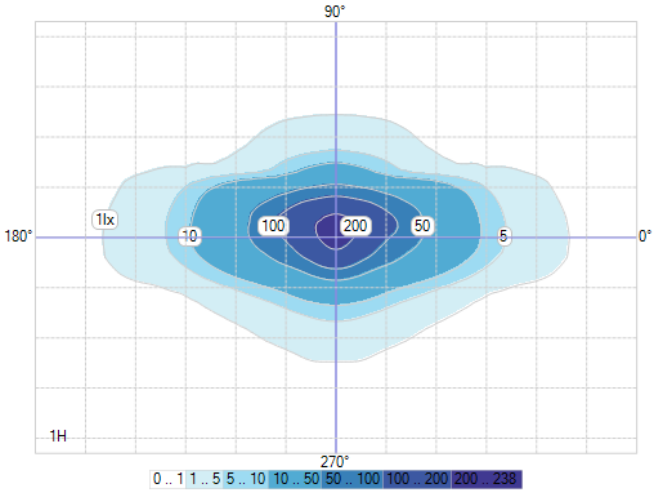

K-Curve

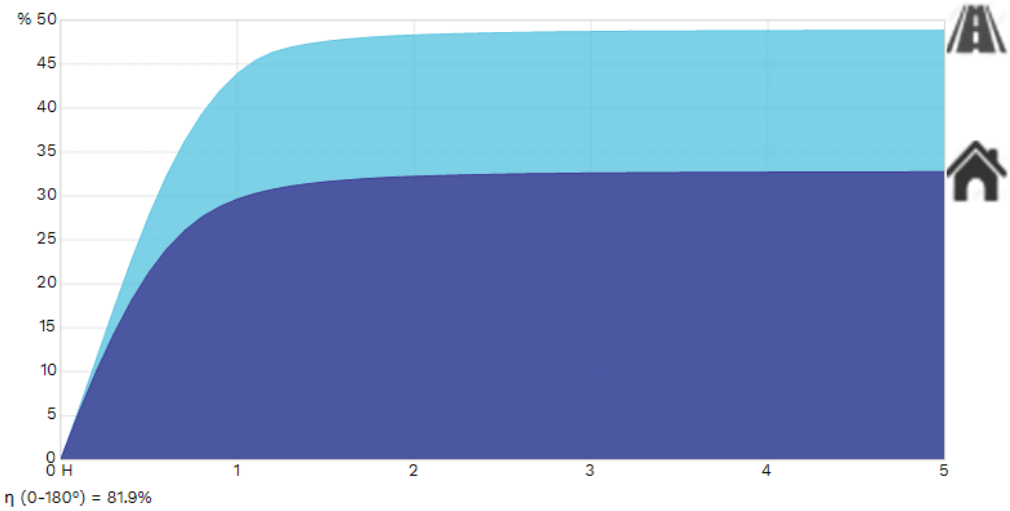

IES Roadway Classification / Nema Classification

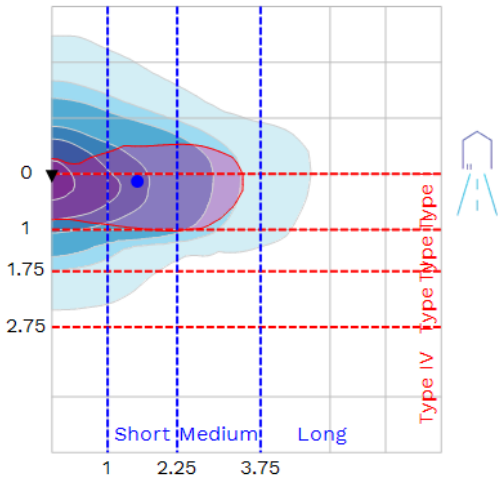

II - Short

Luminaire classification system (LCS)

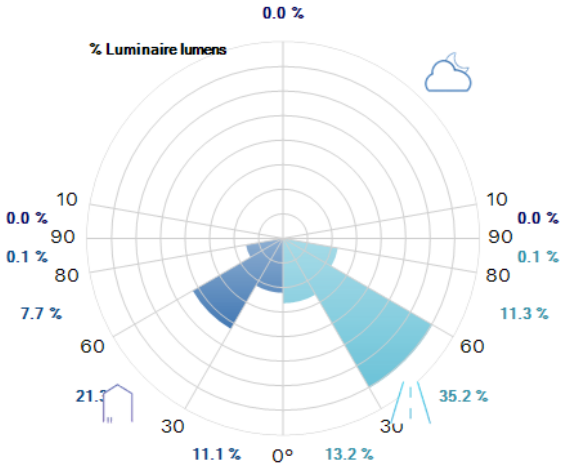

Intensity diagram in max Cone and in CPlane

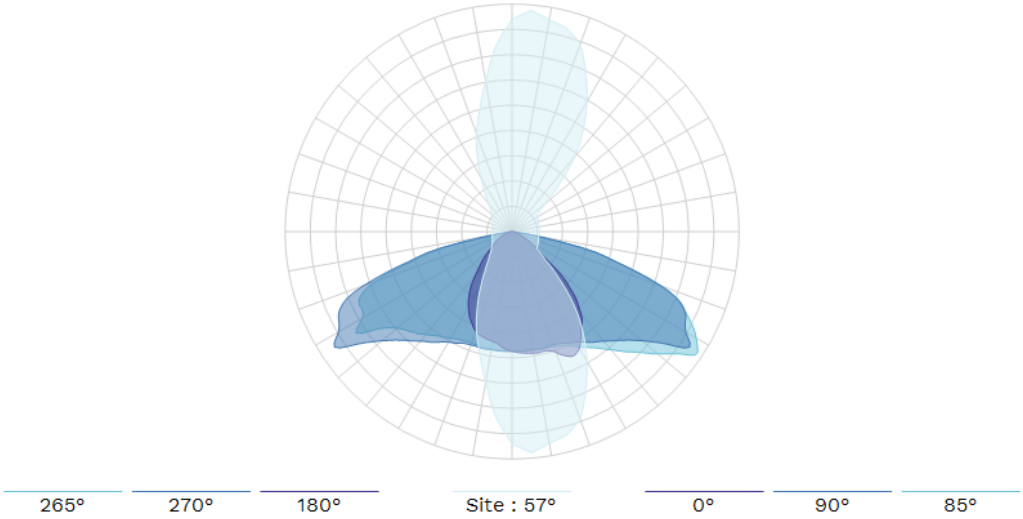

Copyright © 2024 Schréder SA. All rights reserved. Specifications are of an indicative nature and subject to change without notice.

http://www.schreder.com

Laboratory
Test report

FORM L-54 V2

Schréder
Experts in lightability™

Laboratoire Schréder
Rue de Mons 3 - B-4000 Liège - BELGIUM
Tél.: +32.4.224.71.40

EMC test

General information

Subject : VITALUM 1 - 36 Seoul 5050 - 850mA - OSRAM 4DIM G3 75W 150-1,050mA 220-240V DALI C123 . – Nema - Cl I

Asked by : SZÜGYI János Péter

Created on : 02/02/2024

Started on : 13/02/2024

Test number : D240116

Reference norm : EN IEC 61547 (2023); IEC 61000-3-2 Ed5 (2018) +A1 (2020); EN IEC 61000-3-2 (2019) + A1 (2021); EN IEC 55015 (2019) +A11 (2020); IEC 61547 Ed3 (2020)

Sample(s) : E240055

Test conditions

Luminaire : VITALUM 1

Operator : External Lab

Electrical class : Class I EU

Number of LEDs : 36

LED Type : Seoul 5050

Lens : LENS PLATE 36 LENSES 5439 PMMA / 03-50-371

PCBA : PCBA HF2 36 SSC5050 4000K 4stp 70 Min. W4 12P3 1CH HT / 03-52-280

Driver : DRIVER_OSRAM_4DIM G3_75W_150-1,050mA_220-240V_DALI_C123_. / 03-55-719

Number of driver(s) : 1

Current setting (mA) : 850

Dimming minimum value : 20

Dimming protocol : DALI

Control system : Nema

Overvoltage protection : NA

Testing facility : External - EMC-ULg

External test report reference : 240207/0936/AAAN0587A

Conclusion

Success

Conclusion :

VITALUM 1 Cl. I with OSRAM 4DIM G3 75W driver complies with CISPR 15, EN IEC 55015, EN IEC 61547 and IEC61547 standards in accredited lab.

Remark: This report covers the extra surge test @6kV L-N and @10kV L/N-PE.

Validated by :
LERHO Xavier

Duplicate to : PELSŐCZI Zoltán, SZÜGYI János Péter, NAGY Ádám, LÁMFALUSI Ferenc

LAB : 21/02/2024

The publication of this report in another form than the original one is not allowed without agreement of the laboratory. This report concerns type tests on one or a series of specimens. All information but the measurements results are provided by the customer.

Test(s) details

Test(s)

Name	Description	Verdict
Complete EMC test (10 Kv Surges)	Emission measurements (EN IEC 55015): - Terminal disturbance - Radiated emissions - Conducted emissions Harmonics (IEC 61000-3-2 & EN IEC 61000-3-2) Flicker (IEC 61000-3-3 & EN IEC 61000-3-3) Immunity measurements (IEC 61547 & EN IEC 61547) - Electrostatic discharge (IEC 61000-4-2 & EN 61000-4-2) - Radiated, radio frequency electromagnetic field (IEC 61000-4-3 & EN IEC 61000-4-3) - Fast transients (IEC 61000-4-4 & EN 61000-4-4) - Surges (IEC 61000-4-5 & EN 61000-4-5) - Injected currents (IEC 61000-4-6 & EN IEC 61000-4-6) - Power frequency magnetic field immunity (IEC 61000-4-8 & EN 61000-4-8) - Voltage dips & interruptions (IEC 61000-4-11 & EN IEC 61000-4-11)	Success

<u>Complete EMC test (10 Kv Surges)</u>

Detail(s)

IMG_8566

<u>Number of appendix pages</u> **: 51**

<u>End of test report</u> ***:***

Laboratory
Test report

713-TEST

NBN EN ISO/IEC 17025 :2017

FORM L-54 V2

Schréder
Experts in lightability™

Laboratoire Schréder
Rue de Mons 3 - B-4000 Liège - BELGIUM
Tél.: +32.4.224.71.40

Mechanical impact resistance test

General information

Subject : VITALUM 1 - GLASS - Side-Entry - IK08
Asked by : SZÜGYI János Péter
Created on : 27/09/2023
Started on : 27/09/2023
Test number : D231174
Reference norm : IEC 62696 Ed1 (2011); IEC/EN 60598-1 Ed9 (2021) + A11 (2022)
Sample(s) : E230699

Test conditions

Luminaire : VITALUM 1
Quantity of sample under test : 5
Protector Material : Glass Extra Clear wide serigraphy
Protector Shape : Flat
Serigraphy : ceramic
Protector Thickness (mm) : 5
Protector supplier : External - SzliffGlass

Testing facility : BER – SCHREDER

Operator : Philippe Léonard

IMG_6537

Conclusion

Success

Conclusion :
Statement of conformity according to TR 62696 Ed1 (2011) and section 4.13 of IEC/EN 60598-1 Ed9 (2021) +A11 (2022): IK08 passed.

The publication of this report in another form than the original one is not allowed without agreement of the laboratory. This report concerns type tests on one or a series of specimens. All information but the measurements results are provided by the customer.

Test(s) details

Test(s)

Name	Description	Verdict
Impact points	At pendulum hammer 5 impact points distributed on protector surface One impact on each point 2 supplementary impacts on the most fragile point	Informative
IK08	Impact energy : 5 joules Hammer weight : 1.7 Kg Height of fall : 30 Cm	Success

Impact points

Detail(s)

IMG_6537(a)

IK08

Verdict(s)

- NOT TESTED																
IK 08	Impact	1			2			3			4			5		
Sample	Shot	1	2	3	1	2	3	1	2	3	1	2	3	1	2	3
1		Pass	-	-	Pass	-	-	Pass	-	-	Pass	-	-	Pass	Pass	Pass
2		Pass	-	-	Pass	-	-	Pass	-	-	Pass	-	-	Pass	Pass	Pass
3		Pass	-	-	Pass	-	-	Pass	-	-	Pass	-	-	Pass	Pass	Pass
4		Pass	-	-	Pass	-	-	Pass	-	-	Pass	-	-	Pass	Pass	Pass
5		Pass	-	-	Pass	-	-	Pass	-	-	Pass	-	-	Pass	Pass	Pass

Test room temperature (°C) *:*

23.8

Measurement equipment *:*

Pendulum hammer with chariot (M062)
Thermometer (A056)

Quantities measured *:*

For IK 04/05/06: Verification of the mechanical strength of a luminaire according to PT-S-13
For IK07/08/09/10/10+: Verification of the mechanical strength of a luminaire according to PT-S-05

Uncertainties *:*

Temperature: 0,6 °K
Mass: 0,25 %
Dynamometric key :
From 0.5 to 2.5 Nm : 0,15 Nm
From 2.5 to 5 Nm : 0,22 Nm
From 5 to 25 Nm : 0,83 Nm
From 25 to 60 Nm : 2,73 Nm
From 60 to 100 Nm : 3,55 Nm
For IK 04/05/06, Impact energy: ± 10%
For IK07/08/09/10/10+, Impact energy: ± 1%

Decision rules *:*

Pass/fail criteria for individual test statement of conformity (Verdict) according to GDE-GUI-003:

By visual inspection (or other means if necessary):
Luminaire shows dangerous behavior: fail
Luminaire shows no dangerous behavior: success
When several luminaires are tested, 4 out of 5 samples need to show positive result for compliance of the batch

Pass/fail criteria for the test report statement of conformity (Conclusion):

At least one of the individual test statements of conformity (Verdict) is successful: success, the highest achieved IK is reported

Otherwise: fail

End of accredited report *:*

Laboratory
Test report

713-TEST

NBN EN ISO/IEC 17025 :2017

FORM L-54 V2

Schréder
Experts in lightability™

Laboratoire Schréder
Rue de Mons 3 - B-4000 Liège - BELGIUM
Tél.: +32.4.224.71.40

Thermal Test LED

General information

Subject : VITALUM 1 - 24 Seoul 5050 - 1050-930mA - SIGNIFY FP 75W 300-1,050mA 220-240V DALI C133

Asked by : SZÜGYI János Péter

Created on : 01/02/2024

Started on : 07/02/2024

Test number : D240101

Reference norm : EN IEC 60598-1 (2021) + A11 (2022); EN 60598-2-3 (2003) + A1 (2011); EN 60598-2-5 (2015); IEC 60598-2-5 Ed3 (2015); IEC 60598-2-3 Ed3 (2002) +Amd 1 (2011); IEC 60598-1 Ed9 (2020)

Sample(s) : E240056

Test conditions

Luminaire : VITALUM 1

Number of LED : 24

LED : Seoul 5050

Lens : LENS PLATE 25 LENSES 5425 PMMA / 03-48-040

PCBA : PCBA HF1 24 SC5050 740 4 stp Min. W4 8S3P HT / 03-52-266

Driver : DRIVER_SIGNIFY_FP_75W_300-1,050mA_220-240V_DALI_C133_. / 02-58-000

Number of driver(s) : 1

Control system : NEMA

SPD : None

Additional load info :

New foundry

Testing facility : BER - SCHREDER

Operator : CLOSSET Frédérick

lum

Conclusion

Informative

Conclusion :

ΔTs < 80°C no risk of solder crack

Ta (@930mA): 55°C limited by driver according IEC 60598-2-3 & EN 60598-2-3 and IEC 60598-2-5 & EN 60598-2-5 (outdoor use only)
Ta (@930mA): 45°C limited by driver indoor use and UL standard
Tq (@930mA): 35°C limited by driver according IEC 62722-2-1 & EN IEC 62722-2-1

Ta (@1050mA): 50°C limited by driver according IEC 60598-2-3 & EN 60598-2-3 and IEC 60598-2-5 & EN 60598-2-5 (outdoor use only)
Ta (@1050mA): 40°C limited by driver indoor use and UL standard
Tq (@1050mA): 30°C limited by driver according IEC 62722-2-1 & EN IEC 62722-2-1

Tq given for 100 khrs of lifetime

Validated by :

LERHO Xavier

Duplicate to : PELSŐCZI Zoltán, SZÜGYI János Péter, NAGY Ádám, LÁMFALUSI Ferenc

LAB : 13/02/2024

The publication of this report in another form than the original one is not allowed without agreement of the laboratory. This report concerns type tests on one or a series of specimens. All information but the measurements results are provided by the customer.

Test(s) details

Test(s)

Name	Description	Verdict
Sensors positions	Disposition of the thermocouples on the DUT.	Informative
Test @ 930mA	Test according section 12.4 of IEC 60598-1 & EN IEC 60598-1. The DUT is driven until all thermocouples reach thermal stabilization (i.e. variation = 1K/h). Evaluation of the harmonics behaviour according IEC 61000-3-2 & EN IEC 61000-3-2 - Not covered by the laboratory's accreditation.	Success
Test @ 1050mA		Success

Sensors positions

Detail(s)

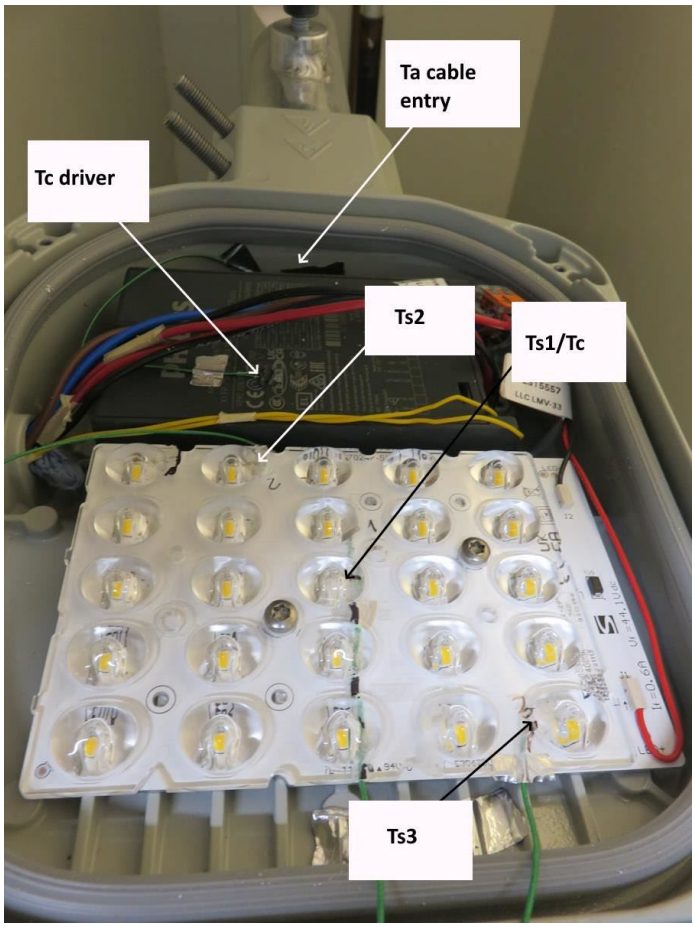

pos_thermo

Test @ 930mA

Verdict(s)

	Ts1	Ts2	Ts3	Driver	Ta Cable entry
Limit Ta	99.0 °C	99.0 °C	99.0 °C	80.0 °C	90.0 °C
Limit Tq	85.0 °C	85.0 °C	85.0 °C	70.0 °C	90.0 °C
Thermocouple T°	62.8 °C	65.6 °C	62.9 °C	61.0 °C	38.1 °C
Room	26.0 °C	26.0 °C	26.0 °C	26.0 °C	26.0 °C
E Led	5.7 V	5.7 V	5.7 V		
I Led	0.309 A	0.309 A	0.309 A		
P Led	1.8 W	1.8 W	1.8 W		
Heating	36.8 °C	39.6 °C	36.9 °C	35.0 °C	12.1 °C
Ta Indoor	62.2 °C	59.4 °C	62.1 °C	45.0 °C	77.9 °C
Tq	48.2 °C	45.4 °C	48.1 °C	35.0 °C	77.9 °C
Solder point temperature used as the image of the lens temperature					
Primary EM		Secondary Em Dr1			
U	229.9 V	U	45.8 V		
I	0.215 A	I	0.926 A		
P	47.7 W	P	42.4 W		
PF	0.967				
Efficiency	88.9%				
THD	10.0%				
Harmonics - 100%	PASS				

Test @ 1050mA

Verdict(s)

	Ts1	Ts2	Ts3	Driver	Ta Cable entry
Limit Ta	99.0 °C	99.0 °C	99.0 °C	80.0 °C	90.0 °C
Limit Tq	85.0 °C	85.0 °C	85.0 °C	70.0 °C	90.0 °C
Thermocouple T°	68.4 °C	71.7 °C	68.6 °C	65.4 °C	39.9 °C
Room	26.1 °C	26.1 °C	26.1 °C	26.1 °C	26.1 °C
E Led	5.8 V	5.8 V	5.8 V		
I Led	0.349 A	0.349 A	0.349 A		
P Led	2.0 W	2.0 W	2.0 W		
Heating	42.3 °C	45.6 °C	42.5 °C	39.3 °C	13.8 °C
Ta Indoor	56.7 °C	53.4 °C	56.5 °C	40.7 °C	76.2 °C
Tq	42.7 °C	39.4 °C	42.5 °C	30.7 °C	76.2 °C
Solder point temperature used as the image of the lens temperature					
Primary EM		Secondary Em Dr1			
U	229.9 V	U	46.3 V		
I	0.243 A	I	1.046 A		
P	54.4 W	P	48.4 W		
PF	0.973				
Efficiency	89.0%				
THD	8.9%				
Harmonics - 100%	PASS				

Test room temperature (°C) *:*

@930mA : 26°C

@1050mA : 26.1°C

Measurement equipment *:*

Keithley with thermocouples type K (E127)
Norma 4000 (E068)
BK (E198)

Thermal test chamber 25 °C (A002)

Quantities measured *:*

Qualification of the thermal limits and measurement of the electrical behavior of a luminaire according to PT-S-07

Uncertainties *:*

Statement of uncertainties (K=2, 95% of confidence level):
Temperature: 1,26 K
Voltage (AC): 0,33%
Current (AC): 0,33 %
Power (AC): 0,27%
Voltage (DC): 0,3 %
Current (DC): 0,3%
Power (DC): 0,23%
Anemometer: ± 0,27 m/s

Decision rules *:*

Pass/fail criteria for individual test statement of conformity (Verdict):

No pass/fail criteria applied on electrical measurements, except on harmonics where the criteria of IEC 61000-3-2 are applied (the harmonics are not covered by the laboratory's accreditation).

No pass/fail criteria applied on thermal measurements when performed at 25°C (+/- 5°C), the Ta/Tq values are calculated according GDE-POL-001.

Pass/fail criteria on thermal qualification (test performed at announced Ta or Tq)
At the announced Ta, no component is above its maximum limit of operation : success
At the announced Ta, at least 1 component is above its maximum limit of operation : fail

According to IEC 60598-2-3 & EN 60598-2-3 and IEC 60598-2-5 & EN 60598-2-5 Standards, the maximum limit of every component can be augmented by 10 K provided that the luminaire is intended for outdoor use only.

At the announced Tq, no component is above its selected performance limit of operation: success
At the announced Tq, at least 1 component is above its selected performance limit of operation : fail

According to IEC 62722-2-1 & EN IEC 62722-2-1, the selected performance limit cannot be augmented by 10 K even if the luminaire is intended for outdoor use.

Any Ta/Tq defined value will be rounded down to the nearest multiple of 5.

In any case, test at 25°C or test at Ta or Tq, if delta Ts is above the recommended value of the GDE-POL-001, the test is failed.

Pass/fail criteria for the test report statement of conformity (Conclusion):

At least one of the individual test statements of conformity (Verdict) is successful: success, the highest achieved Ta/Tq is reported

Otherwise: fail

End of accredited report *:*

Laboratory
Test report

713-TEST

NBN EN ISO/IEC 17025 :2017

FORM L-54 V2

Schréder
Experts in lightability™

Laboratoire Schréder
Rue de Mons 3 - B-4000 Liège - BELGIUM
Tél.: +32.4.224.71.40

Thermal Test LED

General information

Subject : VITALUM 1 - 24 Seoul 5050 - 930mA - OSRAM P5 46W 930-930mA 220-240V NONE - Nema socket

Asked by : SZÜGYI János Péter

Created on : 01/02/2024

Started on : 13/02/2024

Test number : D240102

Reference norm : EN IEC 60598-1 (2021) + A11 (2022); EN 60598-2-3 (2003) + A1 (2011); EN 60598-2-5 (2015); IEC 60598-2-5 Ed3 (2015); IEC 60598-2-3 Ed3 (2002) +Amd 1 (2011); IEC 60598-1 Ed9 (2020)

Sample(s) : E240056

Test conditions

Luminaire : VITALUM 1

Number of LED : 24

LED : Seoul 5050

Lens : LENS PLATE 25 LENSES 5425 PMMA / 03-48-040

PCBA : PCBA HF1 24 SC5050 740 4 stp Min. W4 8S3P HT / 03-52-266

Driver : DRIVER_OSRAM_P5_46W_930-930mA_220-240V_NONE_._. / 03-63-349

Number of driver(s) : 1

Driver current (mA) : 930

Control system : Nema

SPD : none

Additional load info :

Driver: engineering sample.

Testing facility : BER - SCHREDER

Operator : CLOSSET Frédérick

lum

Conclusion

Informative

Conclusion :

ΔTs < 80°C no risk of solder crack

Ta (@930mA) : 55°C limited by driver according IEC 60598-2-3 & EN 60598-2-3 and IEC 60598-2-5 & EN 60598-2-5 (outdoor use only)
Ta (@930mA) : 50°C limited by driver indoor use and UL standard
Tq (@930mA) : 35°C according IEC 62722-2-1 & EN IEC 62722-2-1

Tq given for 100 khrs of lifetime

Validated by :
LERHO Xavier

Duplicate to : PELSŐCZI Zoltán, SZÜGYI János Péter, NAGY Ádám, LÁMFALUSI Ferenc

LAB : 26/02/2024

The publication of this report in another form than the original one is not allowed without agreement of the laboratory. This report concerns type tests on one or a series of specimens. All information but the measurements results are provided by the customer.

Test(s) details

Test(s)

Name	Description	Verdict
Driver detail		Informative
Sensors positions	Disposition of the thermocouples on the DUT.	Informative
Test @ 930mA	Test according section 12.4 of IEC 60598-1 & EN IEC 60598-1. The DUT is driven until all thermocouples reach thermal stabilization (i.e. variation = 1K/h). Evaluation of the harmonics behaviour according IEC 61000-3-2 & E IEC 61000-3-2 - Not covered by the laboratory's accreditation.	Informative

Driver detail

Detail(s)

dr_03-63-349

Sensors positions

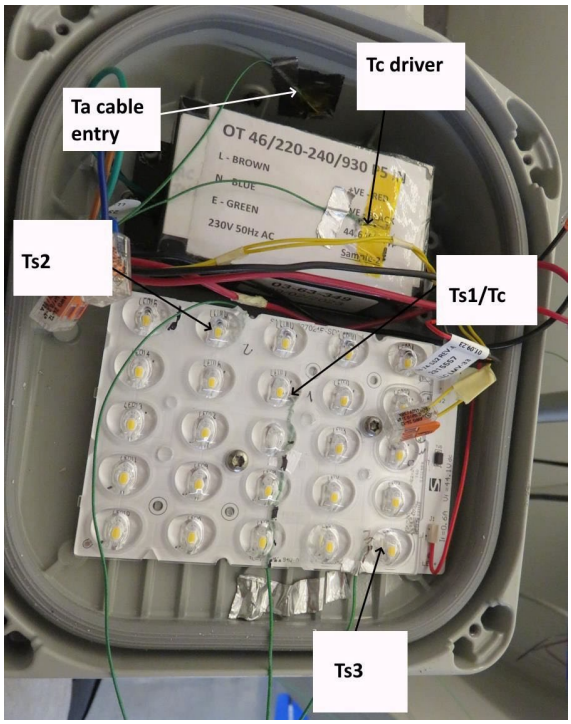

pos_thermo

Test @ 930mA

Verdict(s)

	Ts1	Ts2	Ts3	Driver	Ta Cable entry
Limit Ta	99.0 °C	99.0 °C	99.0 °C	80.0 °C	90.0 °C
Limit Tq	85.0 °C	85.0 °C	85.0 °C	70.0 °C	90.0 °C
Thermocouple T°	61.7 °C	64.4 °C	62.0 °C	52.5 °C	37.2 °C
Room	26.0 °C	26.0 °C	26.0 °C	26.0 °C	26.0 °C
E Led	5.7 V	5.7 V	5.7 V		
I Led	0.307 A	0.307 A	0.307 A		
P Led	1.8 W	1.8 W	1.8 W		
Heating	35.7 °C	38.4 °C	36.0 °C	26.5 °C	11.2 °C
Ta Indoor	63.3 °C	60.6 °C	63.0 °C	53.5 °C	78.8 °C
Tq	49.3 °C	46.6 °C	49.0 °C	43.5 °C	78.8 °C
Solder point temperature used as the image of the lens temperature					
Primary EM		Secondary Em Dr1			
U	229.9 V	U	45.8 V		
I	0.207 A	I	0.920 A		
P	46.3 W	P	42.1 W		
PF	0.972				
Efficiency	90.9%				
THD	7.2%				
Harmonics - 100%	PASS				

Test room temperature (°C) *:*

26

Measurement equipment *:*

Keithley with thermocouples type K (E068)
Norma 4000 (E165)
BK (E198)

Thermal test chamber 25 °C (A002)

Quantities measured *:*

Qualification of the thermal limits and measurement of the electrical behavior of a luminaire according to PT-S-07

Uncertainties *:*

Statement of uncertainties (K=2, 95% of confidence level):
Temperature: 1,26 K
Voltage (AC): 0,33%
Current (AC): 0,33 %
Power (AC): 0,27%
Voltage (DC): 0,3 %
Current (DC): 0,3%
Power (DC): 0,23%
Anemometer: ± 0,27 m/s

Decision rules *:*

Pass/fail criteria for individual test statement of conformity (Verdict):

No pass/fail criteria applied on electrical measurements, except on harmonics where the criteria of IEC 61000-3-2 are applied (the harmonics are not covered by the laboratory's accreditation).

No pass/fail criteria applied on thermal measurements when performed at 25°C (+/- 5°C), the Ta/Tq values are calculated according GDE-POL-001.

Pass/fail criteria on thermal qualification (test performed at announced Ta or Tq)
At the announced Ta, no component is above its maximum limit of operation : success
At the announced Ta, at least 1 component is above its maximum limit of operation : fail

According to IEC 60598-2-3 & EN 60598-2-3 and IEC 60598-2-5 & EN 60598-2-5 Standards, the maximum limit of every component can be augmented by 10 K provided that the luminaire is intended for outdoor use only.

At the announced Tq, no component is above its selected performance limit of operation: success
At the announced Tq, at least 1 component is above its selected performance limit of operation : fail

According to IEC 62722-2-1 & EN IEC 62722-2-1, the selected performance limit cannot be augmented by 10 K even if the luminaire is intended for outdoor use.

Any Ta/Tq defined value will be rounded down to the nearest multiple of 5.

In any case, test at 25°C or test at Ta or Tq, if delta Ts is above the recommended value of the GDE-POL-001, the test is failed.

Pass/fail criteria for the test report statement of conformity (Conclusion):

At least one of the individual test statements of conformity (Verdict) is successful: success, the highest achieved Ta/Tq is reported

Otherwise: fail

End of accredited report *:*

Laboratory
Test report

713-TEST

NBN EN ISO/IEC 17025 :2017

FORM L-54 V2

Schréder
Experts in lightability™

Laboratoire Schréder
Rue de Mons 3 - B-4000 Liège - BELGIUM
Tél.: +32.4.224.71.40

Thermal Test LED

General information

Subject : VITALUM 1 - 24 Seoul 5050 - 1000-930-900-850mA - OSRAM DEXAL G2 40W 150-1,050mA 220-240V D4i C133 . - Zhaga socket

Asked by : SZÜGYI János Péter

Created on : 01/02/2024

Started on : 08/02/2024

Test number : D240103

Reference norm : EN IEC 60598-1 (2021) + A11 (2022); EN 60598-2-3 (2003) + A1 (2011); EN 60598-2-5 (2015); IEC 60598-2-5 Ed3 (2015); IEC 60598-2-3 Ed3 (2002) +Amd 1 (2011); IEC 60598-1 Ed9 (2020)

Sample(s) : E240056

Test conditions

Luminaire : VITALUM 1

Number of LED : 24

LED : Seoul 5050

Lens : LENS PLATE 25 LENSES 5425 PMMA / 03-48-040

PCBA : PCBA HF1 24 SC5050 740 4 stp Min. W4 8S3P HT / 03-52-266

Driver : DRIVER_OSRAM_DEXAL G2_40W_150-1,050mA_220-240V_D4i_C133 / 03-71-446

Number of driver(s) : 1

Control system : Nema

SPD : None

Testing facility : BER - SCHREDER

Operator : CLOSSET Frédérick

lum

Conclusion

Informative

Conclusion :

ΔTs < 80°C no risk of solder crack

Ta (@850mA) : 55°C limited by driver according IEC 60598-2-3 & EN 60598-2-3 and IEC 60598-2-5 & EN 60598-2-5 (outdoor use only)
Ta (@850mA): 45°C limited by driver indoor use and UL standard
Tq (@850mA): 35°C limited by driver according IEC 62722-2-1 & EN IEC 62722-2-1

Tq given for 100 khrs of lifetime

Remark: @900mA Pout > Pout max driver don't use that config

Validated by :
LERHO Xavier

Duplicate to : PELSŐCZI Zoltán, SZÜGYI János Péter, NAGY Ádám, LÁMFALUSI Ferenc

LAB : 26/02/2024

The publication of this report in another form than the original one is not allowed without agreement of the laboratory. This report concerns type tests on one or a series of specimens. All information but the measurements results are provided by the customer.

Test(s) details

Test(s)

Name	Description	Verdict
Sensors positions	Disposition of the thermocouples on the DUT.	Informative
Test @ 900mA	Test according section 12.4 of IEC 60598-1 & EN IEC 60598-1. The DUT is driven until all thermocouples reach thermal stabilization (i.e. variation = 1K/h). Evaluation of the harmonics behaviour according IEC 61000-3-2 & E IEC 61000-3-2 - Not covered by the laboratory's accreditation.	Informative
new test : Test @ 850mA in accordance with the driver matrix	Test according section 12.4 of IEC 60598-1 & EN IEC 60598-1. The DUT is driven until all thermocouples reach thermal stabilization (i.e. variation = 1K/h). Evaluation of the harmonics behaviour according IEC 61000-3-2 & E IEC 61000-3-2 - Not covered by the laboratory's accreditation.	Success
Test @ 930mA	Test not possible, bads parameters	Non realized
Test @ 1000mA	Test not possible, bads parameters	Non realized

<u>Sensors positions</u>

Detail(s)

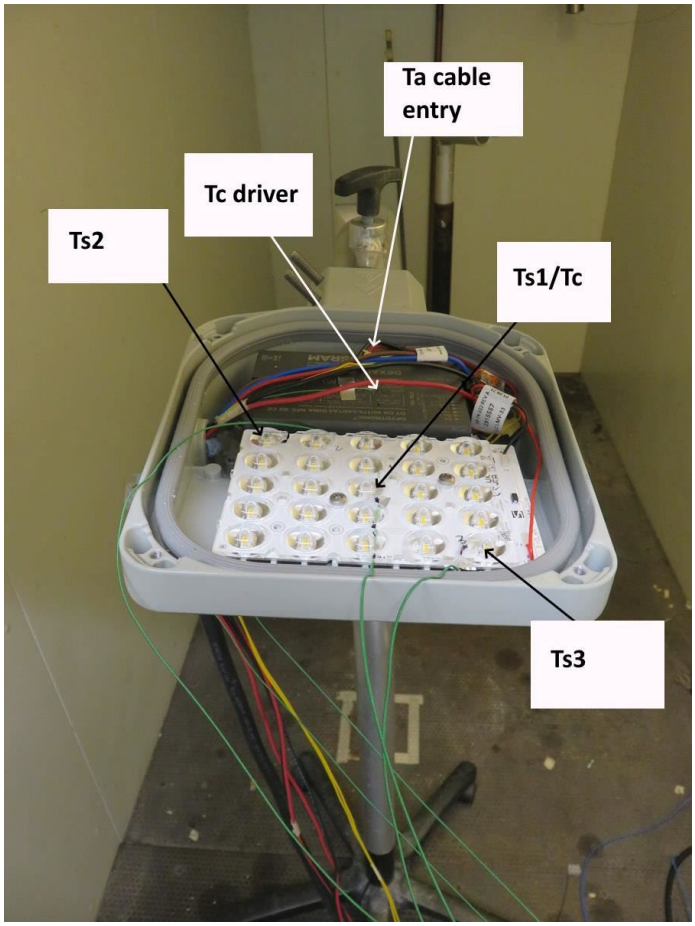

pos_thermo

Test @ 900mA

Verdict(s)

Pout > Pout max driver

	Ts1	Ts2	Ts3	Driver	Ta Cable entry
Limit Ta	99.0 °C	99.0 °C	99.0 °C	75.0 °C	90.0 °C
Limit Tq	85.0 °C	85.0 °C	85.0 °C	65.0 °C	90.0 °C
Thermocouple T°	61.1 °C	63.8 °C	61.4 °C	54.9 °C	35.2 °C
Room	26.1 °C	26.1 °C	26.1 °C	26.1 °C	26.1 °C
E Led	5.7 V	5.7 V	5.7 V		
I Led	0.299 A	0.299 A	0.299 A		
P Led	1.7 W	1.7 W	1.7 W		
Heating	35.0 °C	37.7 °C	35.3 °C	28.8 °C	9.1 °C
Ta Indoor	64.0 °C	61.3 °C	63.7 °C	46.2 °C	80.9 °C
Tq	50.0 °C	47.3 °C	49.7 °C	36.2 °C	80.9 °C
Solder point temperature used as the image of the lens temperature					
Primary EM		Secondary Em Dr1			
U	229.9 V	U	45.7 V		
I	0.201 A	I	0.897 A		
P	45.8 W	P	41.0 W		
PF	0.992				
Efficiency	89.5%				
THD	5.5%				
Harmonics - 100%	PASS				

new test : Test @ 850mA in accordance with the driver matrix

Verdict(s)

	Ts1	Ts2	Ts3	Driver	Ta Cable entry
Limit Ta	99.0 °C	99.0 °C	99.0 °C	75.0 °C	90.0 °C
Limit Tq	85.0 °C	85.0 °C	85.0 °C	65.0 °C	90.0 °C
Thermocouple T°	58.9 °C	61.4 °C	59.2 °C	54.3 °C	34.8 °C
Room	26.1 °C	26.1 °C	26.1 °C	26.1 °C	26.1 °C
E Led	5.7 V	5.7 V	5.7 V		
I Led	0.283 A	0.283 A	0.283 A		
P Led	1.6 W	1.6 W	1.6 W		
Heating	32.8 °C	35.3 °C	33.1 °C	28.2 °C	8.7 °C
Ta Indoor	66.2 °C	63.7 °C	65.9 °C	46.8 °C	81.3 °C
Tq	52.2 °C	49.7 °C	51.9 °C	36.8 °C	81.3 °C
Solder point temperature used as the image of the lens temperature					
Primary EM		Secondary Em Dr1			
U	229.9 V	U	45.5 V		
I	0.189 A	I	0.849 A		
P	43.1 W	P	38.6 W		
PF	0.991				
Efficiency	89.6%				
THD	5.5%				
Harmonics - 100%	PASS				

Test room temperature (°C) **:**

@900mA : 26.1

@850mA : 26.1

Measurement equipment **:**

Keithley with thermocouples type K (E127)
Norma 4000 (E068)
BK (E198)
Thermal test chamber 25 °C (A002)

Quantities measured **:**

Qualification of the thermal limits and measurement of the electrical behavior of a luminaire according to PT-S-07

Uncertainties **:**

Statement of uncertainties (K=2, 95% of confidence level):
Temperature: 1,26 K
Voltage (AC): 0,33%
Current (AC): 0,33 %
Power (AC): 0,27%
Voltage (DC): 0,3 %
Current (DC): 0,3%
Power (DC): 0,23%
Anemometer: ± 0,27 m/s

Decision rules **:**

Pass/fail criteria for individual test statement of conformity (Verdict):

No pass/fail criteria applied on electrical measurements, except on harmonics where the criteria of IEC 61000-3-2 are applied (the harmonics are not covered by the laboratory's accreditation).

No pass/fail criteria applied on thermal measurements when performed at 25°C (+/- 5°C), the Ta/Tq values are calculated according GDE-POL-001.

Pass/fail criteria on thermal qualification (test performed at announced Ta or Tq)
At the announced Ta, no component is above its maximum limit of operation : success
At the announced Ta, at least 1 component is above its maximum limit of operation : fail

According to IEC 60598-2-3 & EN 60598-2-3 and IEC 60598-2-5 & EN 60598-2-5 Standards, the maximum limit of every component can be augmented by 10 K provided that the luminaire is intended for outdoor use only.

At the announced Tq, no component is above its selected performance limit of operation: success
At the announced Tq, at least 1 component is above its selected performance limit of operation : fail

According to IEC 62722-2-1 & EN IEC 62722-2-1, the selected performance limit cannot be augmented by 10 K even if the luminaire is intended for outdoor use.

Any Ta/Tq defined value will be rounded down to the nearest multiple of 5.

In any case, test at 25°C or test at Ta or Tq, if delta Ts is above the recommended value of the GDE-POL-001, the test is failed.

Pass/fail criteria for the test report statement of conformity (Conclusion):

At least one of the individual test statements of conformity (Verdict) is successful: success, the highest achieved Ta/Tq is reported

Otherwise: fail

End of accredited report **:**

Laboratory
Test report

713-TEST

NBN EN ISO/IEC 17025 :2017

FORM L-54 V2

Schréder
Experts in lightability™

Laboratoire Schréder
Rue de Mons 3 - B-4000 Liège - BELGIUM
Tél.: +32.4.224.71.40

Tightness test

General information

Subject : VITALUM 1 - 36 Seoul 5050 - SIGNIFY FP 75W 300-1,050mA 220-240V DALI C133 . - 850mA - GLASS - Nema socket >> IPX6 Before endurance

Asked by : SZÜGYI János Péter

Created on : 27/02/2024

Started on : 28/02/2024

Test number : D240214

Reference norm : EN IEC 60598-1 (2021) + A11 (2022); IEC 60598-1 Ed9 (2020)

Sample(s) : E240061

Test conditions

Luminaire : VITALUM 1

Number of LED : 36

LED : Seoul 5050

Lens : LENS PLATE 36 LENSES 5439 PMMA /03-50-371

PCBA : PCBA HF2 36 SSC5050 4000K 4stp 70 Min. W4 12P3 1CH HT /03-52-280

Driver current (mA) : 850

Protector Material : Glass Extra Clear wide serigraphy

Protector Shape : Flat

Additional info :

Test realized before endurance D240216.

Testing Facility : BER - SCHREDER

Operator : KOY Fiston

IMG_9275

Conclusion

Success

Conclusion :

Statement of conformity according to section 9.2 of EN IEC 60598-1 (2021) + A11 (2022) & IEC 60598-1 Ed9 (2020):

IPx6 passed.

Note: based on the tests IPX5/IPX6 the product is considered to pass the rain test according to §17.5.2 of UL 1598:2021*
* not covered by BELAC accreditation

Validated by :
LERHO Xavier

Duplicate to : PELSŐCZI Zoltán, SZÜGYI János Péter, NAGY Ádám, LÁMFALUSI Ferenc

LAB : 13/03/2024

The publication of this report in another form than the original one is not allowed without agreement of the laboratory. This report concerns type tests on one or a series of specimens. All information but the measurements results are provided by the customer.

Test(s) details

Test(s)

Name	Description	Verdict
IPx6	- Luminaire switched ON until stable T° - Luminaire switched OFF and immediately sprayed with water jet - Hose diam. 12,5 mm - Water flow: 100 l/min - Spraying distance: 3 m - Duration of test: 3 minutes	Success

IPx6

Verdict(s)

Pre-conditioning time :

- 79 minutes

Test result :

- Passed : No water entry in the enclosure of the luminaire

Detail(s)

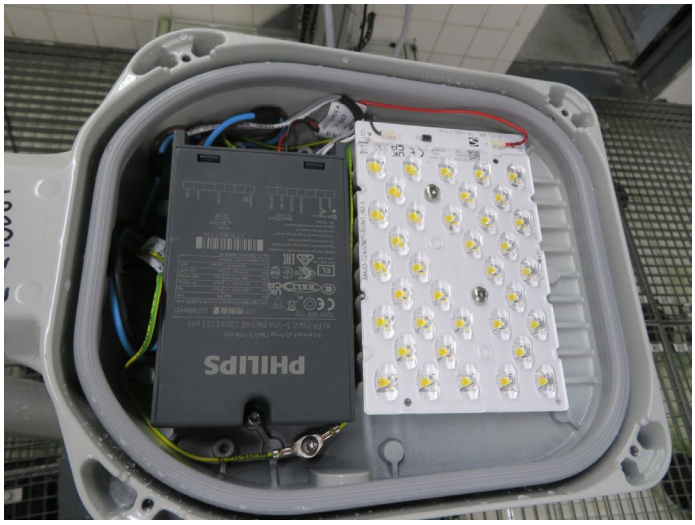

IMG_9277

Test room temperature (°C) *:*

22.6

Measurement equipment *:*

Rotating table (A001/2)
Chronometer (A069)
Thermometer (A039)
Flowmeter (A001/10 + A001/16)
Lance (A001/12/1)
IPx6 nozzle (A001/12/5)
Dynamometric key (M058)

Quantities measured *:*

Verification of water/dust ingress within a luminaire enclosure according to
For IP2X: PT-S-14
For IP3X/4X: PT-S-15
For IP5X/6X: PT-S-06
For IPX3/X4: PT-S-01
For IPX5/X6: PT-S-08
For IPX7/X8: PT-S-09
For IPX9(15°C)/X9(80°C) : PT-S-10

Uncertainties *:*

Statement of uncertainties (K=2, 95% of confidence level):
Time: 0,35 seconds per 10 minutes
Temperature: 0,6 K
Calipers: 0,005 mm
Measuring tape: ± 1,13 mm
Dynamometric key :
From 0.5 to 2.5 Nm : 0,15 Nm
From 2.5 to 5 Nm : 0,22 Nm
From 5 to 25 Nm : 0,83 Nm
From 25 to 60 Nm : 2,73 Nm
From 60 to 100 Nm : 3,55 Nm

For solid ingress test:
IP2X:
Probe dimensions: ± 0,6 mm
Applied force: ± 0,4 N
IP3X:
Probe dimensions: ± 0,3 mm
Applied force:± 0,13 N
IP4X:
Probe dimensions: ± 0,1 mm
Applied force: :± 0,11 N
IP5X/6X
Test duration (talcum suspension time): ± 3 seconds
Talcum mass: 0,02 %

For liquid ingress test:
IPX3/X4
Table rotation: ± 6 sec/rotation
Arms Rotation angle: ± 3°
Water flow: ± 4,5 %
IPX5/X6
Table rotation: ± 6 sec/rotation
Water flow: ± 4 %
Test Distance: +0 / -50 cm
IPX7/X8
Test depth: +10 cm / -0 cm
IPX9
Water temperature: 1.25 K
Test distance: 1.59 mm (for 175mm)

Test duration: 2.49 s (for 3min)
Water pressure: 0.37 N

Decision rules :

Pass/fail criteria for individual test statement of conformity (Verdict):
For solid ingress test:
IP2X:
If contact possible with live parts: fail
Otherwise: success
IP3X/4X:
For luminaires without draining holes, nor ventilation slots for forced cooling, penetration of the test probe in the enclosure: fail
For luminaires with draining holes, or ventilation slots for forced cooling, if contact possible with live part: fail
Otherwise: success
IP5X/6X
By visual inspection:
If possible hazard due to presence of conductive dust: fail
For IP5X: If no possible hazard due to the presence of conductive dust: success
For IP6X: No presence of talcum: success
For liquid ingress test:
IPX3/X4/X5/X6/IPX9(15°C)/X9(80°C):
By visual inspection:
If possible hazard due to presence of water: fail
If no possible hazard due to the presence of water and no efficient way to evacuate the water: fail
If no possible hazard due to the presence of water and an efficient way to evacuate the water: success
No presence of water: success
IPX7/X8:
By visual inspection:
Presence of water: fail
No presence of water: success

Pass/fail criteria for the test report statement of conformity (Conclusion):

At least one of the individual test statements of conformity (Verdict) is failed: failed

Otherwise: success

End of accredited report :

Schréder
Experts in lightability™

Laboratoire Schréder
Rue de Mons 3 - B-4000 Liège - BELGIUM
Tél.: +32.4.224.71.40

Tightness test

General information

Subject : VITALUM 1 - 36 Seoul 5050 - SIGNIFY FP 75W 300-1,050mA 220-240V DALI C133 . - 850mA - GLASS - Nema socket

Asked by : SZÜGYI János Péter

Created on : 14/03/2024

Started on : 14/03/2024

Test number : D240250

Reference norm : EN IEC 60598-1 (2021) + A11 (2022); IEC 60598-1 Ed9 (2020)

Sample(s) : E240061

Test conditions

Luminaire : VITALUM 1

Number of LED : 36

LED : Seoul 5050

Lens : LENS PLATE 36 LENSES 5439 PMMA /03-50-371

PCBA : PCBA HF2 36 SSC5050 4000K 4stp 70 Min. W4 12P3 1CH HT /03-52-280

Driver current (mA) : 850

Protector Material : Glass Extra Clear wide serigraphy

Protector Shape : Flat

Additional info :

Test realized after endurance D240216.

Testing Facility : BER - SCHREDER

Operator : KOY Fiston

IMG_0095

Conclusion

Success

Conclusion :

Statement of conformity according to section 9.2 of EN IEC 60598-1 (2021) + A11 (2022) & IEC 60598-1 Ed9 (2020):

IP66 passed.

Note: based on the tests IPX5/IPX6 the product is considered to pass the rain test according to §17.5.2 of UL 1598:2021*
* not covered by BELAC accreditation

The publication of this report in another form than the original one is not allowed without agreement of the laboratory. This report concerns type tests on one or a series of specimens. All information but the measurements results are provided by the customer.

Test(s) details

Test(s)

Name	Description	Verdict
IP6x	- Luminaire switched ON until stable T° - Talcum in suspension (blowing ON) - After 1', luminaire OFF - Talcum for 3 hours	Success
IPx6	- Luminaire switched ON until stable T° - Luminaire switched OFF and immediately sprayed with water jet - Hose diam. 12,5 mm - Water flow: 100 l/min - Spraying distance: 3 m - Duration of test: 3 minutes	Success

<u>IP6x</u>

Verdict(s)

Pre-conditioning time :

- 98 minutes

Test result :

- Passed : No talcum entry in the enclosure of the luminaire

Detail(s)

IMG_0140

IMG_0141

IPx6

Verdict(s)

Pre-conditioning time :

- 86 minutes

Test result :

- Passed : No water entry in the enclosure of the luminaire

Detail(s)

IMG_0096

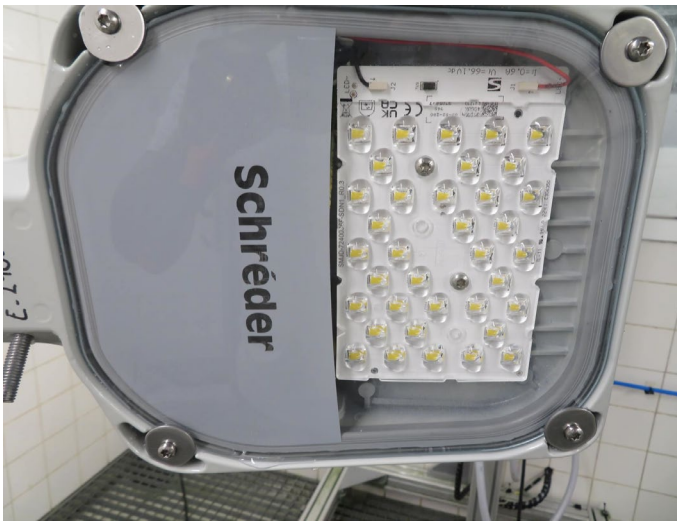

IMG_0099

IMG_0102

Test room temperature (°C) *:*

IPx6 :22.5

IP6x :23.1

Measurement equipment *:*

IPx6 :

Rotating table (A001/2)
Chronometer (A069)
Thermometer (A039)
Flowmeter (A001/10 + A001/16)
Lance (A001/12/1)
IPx6 nozzle (A001/12/5)

IP6x :

Talcum chamber (A003)
Thermometer (A055)
Chronometer (A069)

Quantities measured *:*

Verification of water/dust ingress within a luminaire enclosure according to
For IP2X: PT-S-14
For IP3X/4X: PT-S-15
For IP5X/6X: PT-S-06
For IPX3/X4: PT-S-01
For IPX5/X6: PT-S-08
For IPX7/X8: PT-S-09
For IPX9(15°C)/X9(80°C) : PT-S-10

Uncertainties *:*

Statement of uncertainties (K=2, 95% of confidence level):
Time: 0,35 seconds per 10 minutes
Temperature: 0,6 K
Calipers: 0,005 mm
Measuring tape: ± 1,13 mm
Dynamometric key :
From 0.5 to 2.5 Nm : 0,15 Nm
From 2.5 to 5 Nm : 0,22 Nm
From 5 to 25 Nm : 0,83 Nm
From 25 to 60 Nm : 2,73 Nm
From 60 to 100 Nm : 3,55 Nm

For solid ingress test:
IP2X:
Probe dimensions: ± 0,6 mm
Applied force: ± 0,4 N
IP3X:
Probe dimensions: ± 0,3 mm
Applied force:± 0,13 N
IP4X:
Probe dimensions: ± 0,1 mm
Applied force: :± 0,11 N

IP5X/6X
Test duration (talcum suspension time): ± 3 seconds
Talcum mass: 0,02 %

For liquid ingress test:
IPX3/X4
Table rotation: ± 6 sec/rotation
Arms Rotation angle: ± 3°
Water flow: ± 4,5 %
IPX5/X6

Table rotation: ± 6 sec/rotation
Water flow: ± 4 %
Test Distance: +0 / -50 cm

IPX7/X8

Test depth: +10 cm / -0 cm

IPX9

Water temperature: 1.25 K
Test distance: 1.59 mm (for 175mm)
Test duration: 2.49 s (for 3min)
Water pressure: 0.37 N

Decision rules :

Pass/fail criteria for individual test statement of conformity (Verdict):

For solid ingress test:

IP2X:

If contact possible with live parts: fail
Otherwise: success

IP3X/4X:

For luminaires without draining holes, nor ventilation slots for forced cooling, penetration of the test probe in the enclosure: fail
For luminaires with draining holes, or ventilation slots for forced cooling, if contact possible with live part: fail
Otherwise: success

IP5X/6X

By visual inspection:
If possible hazard due to presence of conductive dust: fail
For IP5X: If no possible hazard due to the presence of conductive dust: success
For IP6X: No presence of talcum: success

For liquid ingress test:

IPX3/X4/X5/X6/IPX9(15°C)/X9(80°C):

By visual inspection:
If possible hazard due to presence of water: fail
If no possible hazard due to the presence of water and no efficient way to evacuate the water: fail
If no possible hazard due to the presence of water and an efficient way to evacuate the water: success
No presence of water: success

IPX7/X8:

By visual inspection:
Presence of water: fail
No presence of water: success

Pass/fail criteria for the test report statement of conformity (Conclusion):

At least one of the individual test statements of conformity (Verdict) is failed: failed

Otherwise: success

End of accredited report :

VITALUM

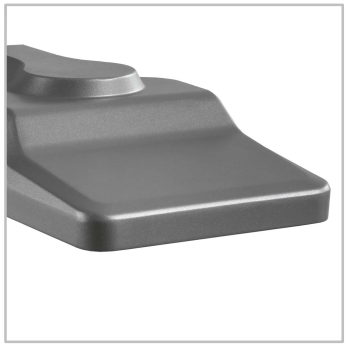

HI FLEX™ 1&2 HI FLEX™ 2

IP 66 IK 08

Aparat de iluminat de înaltă eficiență energetică și cel mai bun cost total de proprietate

Eficacitatea și funcționalitatea au fost principalele concepte din spatele designului aparatului de iluminat VITALUM.

Cu VITALUM, beneficiezi de o soluție eficientă de iluminare într-o carcasă ușoară și funcțională. VITALUM susține o abordare mai raționalizată a iluminatului, oferind pachete de lumeni și distribuții de lumină care îndeplinesc cu exactitate cerințele specifice ale aplicațiilor de iluminat stradal public, cum ar fi zone rezidențiale, piste de biciclete, parcări și zone de transport public.

Echipat cu tehnologie fotometrică de ultimă oră, VITALUM oferă o eficiență excelentă cu cea mai rapidă rentabilitate a investiției.

VITALUM oferă două opțiuni de conectivitate avansate, făcând din acest aparat de iluminat funcțional o soluție de iluminat reală, gata de conectare.

CĂI DE CIRCULAȚIE URBANĂ ȘI STRĂZI | PODURI | PISTE DE BICICLETE ȘI PIETONALE | STAȚII DE TREN ȘI METROU | ZONE EXTINSE | PIEȚE ȘI ZONE PIETONALE | CĂI DE CIRCULAȚIE ȘI AUTOSTRĂZI

Descriere

VITALUM susține utilizarea mai responsabilă a materiilor prime prin utilizarea de resurse minime, dar robuste. Fabricat din materiale reciclabile (aluminiu și sticlă), cu clase IP și IK ridicate, VITALUM susține principiul economiei circulare. Separabilitatea componentelor sale, opțiunile de control, consumul redus de energie și caracteristicile smart-ready îl fac o soluție de iluminat cu adevărat sustenabilă.

VITALUM beneficiază de un concept fotometric extrem de eficient - modulul Schréder HiFlexTM LED. Acest concept se concentrează pe performanță și eficacitate, rezultând în economii mai mari de energie. Permite o instalație de iluminat rentabilă și de lungă durată.

Cu VITALUM, obții iluminarea exactă de care ai nevoie. Aparatul de iluminat a fost proiectat cu un pachet opțional dezvoltat special pentru a satisface cerințele aplicațiilor tale de iluminat pentru zone rezidențiale, străzile orașului, parcări, piste de biciclete, piețe publice și locuri publice.

Un aparat de iluminat eficient și rentabil, VITALUM oferă, de asemenea, două opțiuni de conectivitate: NEMA și Zhaga. Aceste caracteristici permit controlul de la distanță și reglarea nivelurilor de iluminare în orice moment, contribuind la reducerea consumului de energie pentru economii suplimentare de energie.

VITALUM dispune de fixare cu montaj lateral pentru țuțuri de Ø42 mm până la Ø60 mm. Poate fi livrat cu un conector cu garnitură de etanșare conceput pentru a ușura și accelera instalarea.

Design funcțional cu greutate redusă.

Echipat cu module fotometrice Schréder HiFlexTM pentru cea mai mare eficacitate.

TIPURI DE APLICAȚII

- CĂI DE CIRCULAȚIE URBANĂ ŞI STRĂZI
- PODURI
- PISTE DE BICICLETE ȘI PIETONALE
- STAȚII DE TREN ȘI METROU
- ZONE EXTINSE
- PIEŢE ŞI ZONE PIETONALE
- CĂI DE CIRCULAȚIE ŞI AUTOSTRĂZI

AVANTAJE CHEIE

- Modulul fotometric HiFlexTM conceput pentru eficiență energetică optimizată
- Instalare uşoară
- Eficiență ridicată, cu costuri operaționale reduse
- Furnizat pre-cablat, pentru instalare ușoară (opțional, conectori rapizi)
- Pregătit pentru interconectare în funcție de cerințele viitoarelor dvs. orașe inteligente

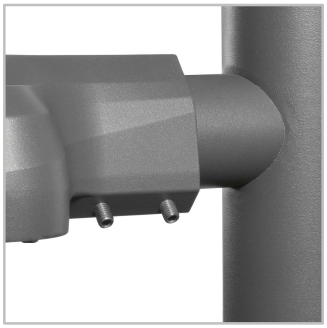

Fixare ușoară cu montaj lateral, asigurată cu două șuruburi. Opțional, poate fi livrat un conector cu garnitură de etanșare pentru a ușura și a accelera și mai mult instalarea.

Opțional, VITALUM poate fi echipat cu o priză NEMA sau Zhaga.

Drepturi de autor © Schréder SA - aprilie 2024. Toate drepturile rezervate. Specificațiile au caracter informativ și pot fi modificate fără notificare prealabilă.

HiFlex™

Platforma HiFlexTM este proiectată în mod expert pentru optimizarea eficienței energetice. Modulele sale fotometrice dispun de LED-uri de mare putere care oferă performanțe excepționale cu un consum de energie minim, rezultând într-o eficacitate de neegalat (lm/W).

Ideal pentru proiectele care necesită o abordare simplificată pentru maximizarea eficienței iluminatului și obținerea rapidă a rentabilității investiției, HiFlexTM este disponibil în două versiuni: HiFlexTM1, care dispune de 24 de LED-uri și HiFlexTM2, echipat cu 36 de LED-uri. Ambele variante sunt proiectate având în vedere prioritățile de compactitate, rentabilitate și performanță

Drepturi de autor © Schréder SA - aprilie 2024. Toate drepturile rezervate. Specificațiile au caracter informativ și pot fi modificate fără notificare prealabilă.

Profil personalizat de reducere a fluxului luminos

Driverele inteligente pot fi programate cu profile complexe de reducere a fluxului luminos. Sunt posibile până la cinci combinații de intervale de timp și niveluri de lumină . Această caracteristică nu necesită cablare suplimentară.

Perioada dintre pornire și oprire este utilizată pentru a activă profilul de reducere a fluxului luminos presetat. Sistemul personalizat de reducere a fluxului luminos generează economii mari de energie electrică , asigurând în același timp nivelul de luminanță optim și uniformitatea pe timpul nopții.

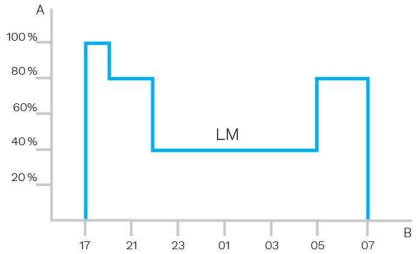

A. Nivel de reducere a fluxului luminos | B. Timp

Fotocelula

Fotocelula pornește aparatul de iluminat imediat ce lumina naturală scade la un anumit nivel. Poate fi programat pentru a porni în timpul unei furtuni, într-o zi înnorată (în zone critice) sau doar la căderea nopții, astfel încât să ofere siguranță și confort în spațiile publice.

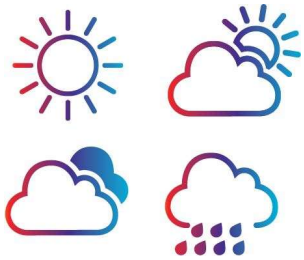

Drepturi de autor © Schréder SA - aprilie 2024. Toate drepturile rezervate. Specificațiile au caracter informativ și pot fi modificate fără notificare prealabilă.

Schréder EXEDRA este cel mai avansat sistem de gestionare a iluminatului de pe piață pentru controlul, monitorizarea și analiza iluminatului stradal într-un mod ușor de utilizat.

Standardizarea ecosistemelor interoperabile

Schréder joacă un rol cheie în promovarea standardizării cu alianțe și parteneri precum uCIFI, TALQ sau Zhaga. Angajamentul nostru comun este de a oferi soluții concepute pentru integrarea verticală și orizontală a IoT. De la corp (hardware), la limbaj (model de date) și inteligență (algoritmi), întregul sistem Schréder EXEDRA se bazează pe tehnologii comune și deschise. Schréder EXEDRA se bazează, de asemenea, pe Microsoft™ Azure pentru serviciile cloud, furnizate cu cel mai ridicat nivel de încredere, transparență, conformitate cu standardele și reglementările în vigoare.

Depășirea barierelor

Cu EXEDRA, Schréder a adoptat o abordare tehnologică-agnostică, bazându-se pe standarde și protocoale deschise pentru a proiecta o arhitectură care să poată interacționa perfect cu soluții software și hardware de la terți. Schréder EXEDRA este conceput pentru a debloca interoperabilitatea complet, deoarece oferă posibilitatea de :

- controlare a dispozitivelor (aparate de iluminat) de la alte mărci
- gestionarea controlerelor și integrarea de senzori de la alte mărci
- conectarea cu dispozitive și platforme de la terți

O soluție de tip "plug-and-play"

Fiind un sistem concentrator de date care utilizează rețeaua celulară, un proces inteligent de punere în funcțiune automată recunoaște, verifică și extrage datele despre aparate de iluminat în interfața cu utilizatorul. Rețeaua de autoreglare dintre controlerele de aparate de iluminat permite configurarea în timp real a iluminatului adaptiv direct prin intermediul interfeței cu utilizatorul.

Experiență personalizată

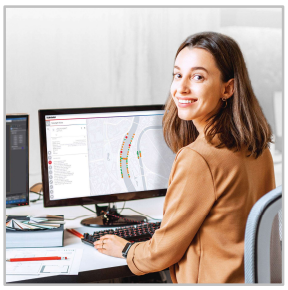

Schréder EXEDRA include toate funcțiile avansate necesare pentru gestionarea dispozitivelor inteligente, controlul în timp real și programat, scenarii de iluminat dinamice și automatizate, planificarea operațiunilor de mentenanță și de exploatare pe teren, gestionarea consumului de energie și integrarea hardware-ului conectat de la terți. Acesta este complet configurabil și include instrumente pentru gestionarea utilizatorilor și o politică multi-tenant care permite antreprenorilor, utilităților de producție sau orașelor mari să segmenteze proiectele.

Un instrument puternic pentru eficiență, optimizare și pentru luarea deciziilor

Datele sunt o mare valoare. Schréder EXEDRA le conferă managerilor toată claritatea de care au nevoie pentru a lua decizii. Platforma colectează cantități masive de date de la dispozitivele finale și, le cumulează, le analizează și le afișează intuitiv pentru a ajuta utilizatorii finali să ia cele mai bune decizii.

Protejat pe toate laturile

ISO 27001
BUREAU VERITAS
Certification

Schréder EXEDRA oferă tehnologie de ultimă generație cu criptare, analiză, clasificare și practici cheie de gestionare care protejează datele în întregul sistem și în serviciile asociate.

Aplicație mobilă: în orice moment, în orice loc, conectați-vă la iluminatul stradal

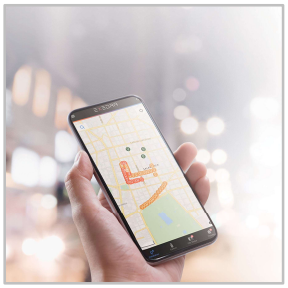

Aplicația mobilă Schréder EXEDRA oferă funcționalitățile esențiale ale platformei desktop, pentru a însoți toate tipurile de operatori de pe șantier în efortul lor zilnic de a maximiza potențialul iluminatului conectat. Aceasta permite controlul și setările în timp real și contribuie la o întreținere eficientă.

Drepturi de autor © Schréder SA - aprilie 2024. Toate drepturile rezervate. Specificațiile au caracter informativ și pot fi modificate fără notificare prealabilă.

Consorțiul Zhaga și-a unit forțele cu DiiA și a produs o singură certificare Zhaga-D4i, care combină specificațiile Zhaga Book 18 versiunea 2 privind conectivitatea pentru exterior cu specificațiile D4i ale DiiA pentru DALI intra-luminiar.

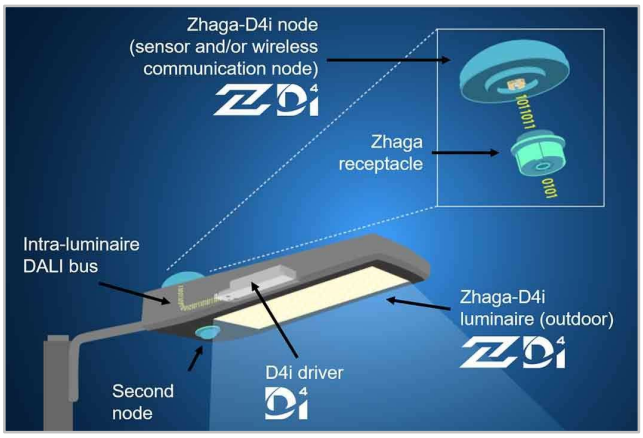

Standardizare pentru ecosisteme interoperabile

Member of Zhaga

În calitate de membru fondator al consorțiului Zhaga, Schréder a participat la crearea și, prin urmare, susține programul de certificare Zhaga-D4i și inițiativa acestui grup de standardizare a unui ecosistem interoperabil. Specificațiile D4i preiau ce este mai bun din protocolul standard DALI2 și îl adaptează la un mediu intra-luminiar, dar are anumite limitări. Numai dispozitivele de control montate pe corpuri de iluminat pot fi combinate cu un corp de iluminat Zhaga-D4i. Conform specificațiilor, dispozitivele de control sunt limitate la un consum mediu de energie de 2W și, respectiv, 1W.

Programul de certificare

Certificarea Zhaga-D4i acoperă toate caracteristicile critice, inclusiv potrivirea mecanică, comunicarea digitală, raportarea datelor și cerințele de alimentare în cadrul unui singur corp de iluminat, asigurând interoperabilitatea plug-and-play a corpurilor de iluminat (drivere) și a perifericelor, cum ar fi nodurile de conectivitate.

Soluție eficientă din punct de vedere al costurilor

Un corp de iluminat certificat Zhaga-D4i include drivere care oferă funcții care anterior se aflau în nodul de control, cum ar fi contorizarea energiei, ceea ce a simplificat dispozitivul de control, reducând astfel prețul sistemului de control.

Drepturi de autor © Schréder SA - aprilie 2024. Toate drepturile rezervate. Specificațiile au caracter informativ și pot fi modificate fără notificare prealabilă.

INFORMAȚII GENERALE

Înălțimea de instalare recomandată	4m to 15m | 13' to 49'
Eticheta Circle Light	Scor> 90 - Produsul îndeplinește pe deplin cerințele privind economia circulară
Marca CE	Da
Certificat ENEC	Da
Certificat ENEC+	Da
Certificat Zhaga-D4i	Da
Marca UKCA	Da
Standard de testare	EN 60598-1 EN 60598-2-1 EN 62262

CARCASĂ AND FINISAJ

Carcasă	Aluminiu
Distribuție luminoasă	PMMA
Difuzor	Sticlă securizată
Carcasă finisaj	Vopsire în câmp electrostatic
Culoare	AKZO gri 900 sablat
Nivel de etanşeitate	IP 66
Rezistență la impact	IK 08
Test de vibrație	Conform cu IEC modificat 68-2-6 (0,5G)
Acces pentru mentenanță	Prin slăbirea șuruburilor de pe capacul inferior

CONDIȚII DE FUNCȚIONARE

Temperatura de functionare(Ta)	-30°C până la +55°C ținând cont de efectul vântului

· În funcție de configurația aparatului de iluminat. Pentru mai multe detalii, vă rugăm să ne contactați.

INFORMAȚII ELECTRICE

Clasa electrică	Class I EU, Class II EU
Tensiune nominală	220-240V – 50-60Hz
Protecţie la supratensiuni (kV)	10
Compatibilitate electromagnetică (EMC)	EN 55015 / EN 61000-3-2 / EN 61000-3-3 / EN 61547
Opțiuni de control	Profil personalizat de reducere a fluxului luminos, Fotocelulă, Telegestiune
Priză	Zhaga (opțional) Optional priză NEMA 7 pini
Sistem(e) de control asociate	Schréder EXEDRA

INFORMAȚII FOTOMETRICE

Temperatura de culoare LED	2200K (Alb cald WW 722) 2700K (Alb cald WW 727) 3000K (Alb cald WW 730) 4000K (Alb neutru NW 740)
Indicele de redare a culorilor (CRI)	>70 (Alb cald WW 722) >70 (Alb cald WW 727) >70 (Alb cald WW 730) >70 (Alb neutru NW 740)
Procent flux luminous in emisfera superioară (ULOR)	0%
ULR	0%

· ULOR poate fi diferit în funcție de configurație. Vă rugăm să ne consultați.
· ULR poate fi diferit în funcție de configurație. Vă rugăm să ne consultați.

DURATA DE VIAȚA A LED-urilor @ TQ 25 ° C

Toate configurațiile	100,000h - L95

· Durata de viață poate fi diferită în funcție de dimensiune / configurații. Vă rugăm să ne consultați.

Drepturi de autor © Schréder SA - aprilie 2024. Toate drepturile rezervate. Specificațiile au caracter informativ și pot fi modificate fără notificare prealabilă.

Schréder

DIMENSIUNI ȘI MONTAJ

AxBxC (mm | inch)	307x80x207 | 12.1x3.1x8.1
Greutate (kg | lbs)	2.4-2.9 | 5.3-6.4
Rezistență aerodinamică (CxS)	0.04
Posibilități de montaj	Montaj lateral - Ø42mm Montaj lateral – Ø48mm Montaj lateral – Ø60mm

· Pentru mai multe informații despre posibilitățile de montaj, vă rugăm să consultați fișa de instalare.

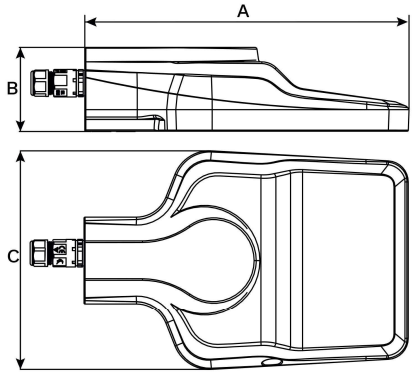

Drepturi de autor © Schréder SA - aprilie 2024. Toate drepturile rezervate. Specificațiile au caracter informativ și pot fi modificate fără notificare prealabilă.

VITALUM | Montaj lateral cu glisare pe ștuțuri Ø42-60 mm – 2 x șuruburi M8

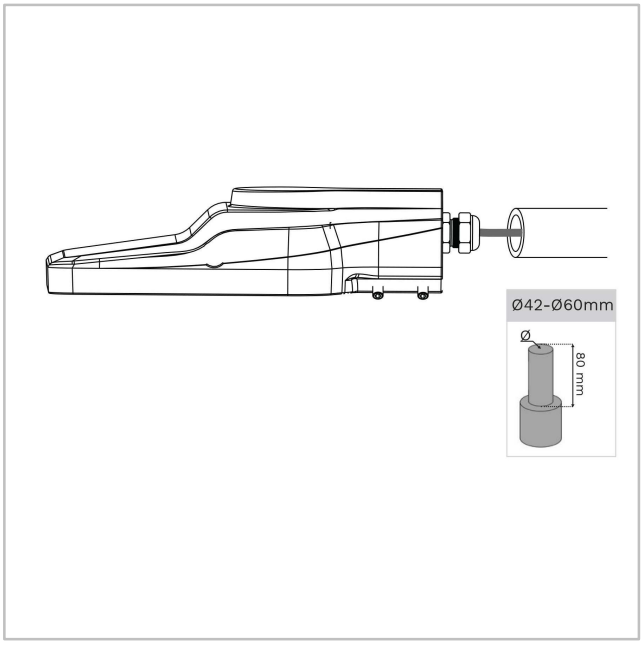

Drepturi de autor © Schréder SA - aprilie 2024. Toate drepturile rezervate. Specificațiile au caracter informativ și pot fi modificate fără notificare prealabilă.

VITALUM 1

Distribuții luminoase

HI FLEX™ 2

	Flux luminos al aparatului de iluminat (lm)								Putere electrică (W) *		Eficacitate aparat de iluminat (lm/W)
	Alb cald WW 722		Alb cald WW 727		Alb cald WW 730		Alb neutru NW 740				
Număr de LED-uri	Min	Max	Min	Max	Min	Max	Min	Max	Min	Max	Până la
36	1700	6300	1900	7100	2000	7400	2200	8000	15	51	165

Toleranță flux luminos ± 7%, toleranță putere totală aparat de iluminat ± 5 %

VITALUM 1

Distribuții luminoase

HI FLEX™ 1&2

	Flux luminos al aparatului de iluminat (lm)								Putere electrică (W) *		Eficacitate aparat de iluminat (lm/W)
	Alb cald WW 722		Alb cald WW 727		Alb cald WW 730		Alb neutru NW 740				
Număr de LED-uri	Min	Max	Min	Max	Min	Max	Min	Max	Min	Max	Până la
24	1100	5700	1300	6400	1300	6700	1400	7200	11	52	155
36	1700	6300	1900	7100	2000	7400	2200	8000	15	51	165

Toleranță flux luminos ± 7%, toleranță putere totală aparat de iluminat ± 5 %

Drepturi de autor © Schréder SA - aprilie 2024. Toate drepturile rezervate. Specificațiile au caracter informativ și pot fi modificate fără notificare prealabilă.

HI FLEX™182

5424

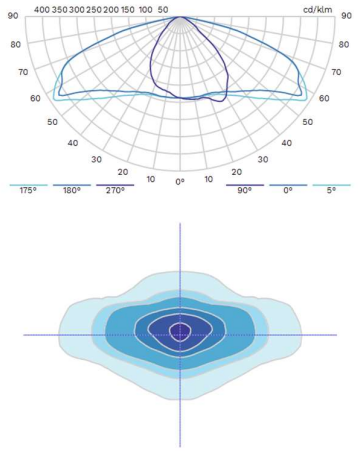

HI FLEX™182

5425

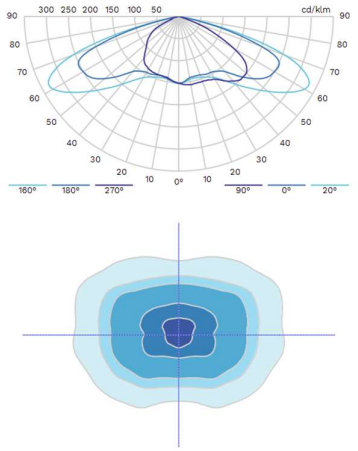

HI FLEX™182

5426

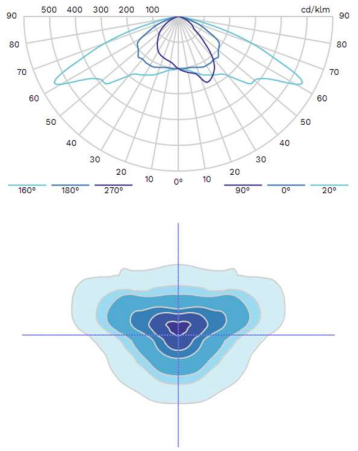

HI FLEX™182

5427

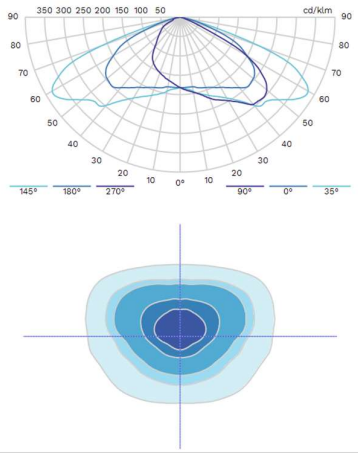

HI FLEX™182

5428

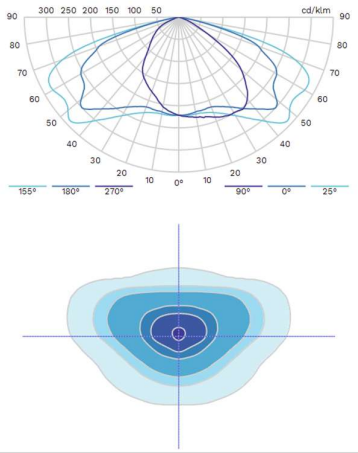

HI FLEX™2

5439

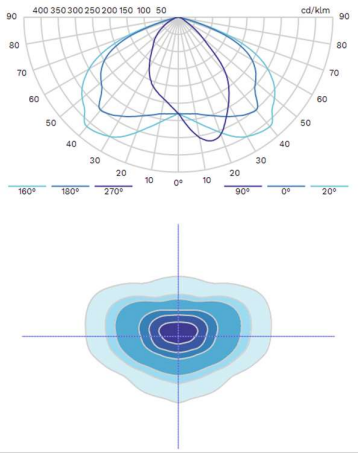

HI FLEX™2

5445

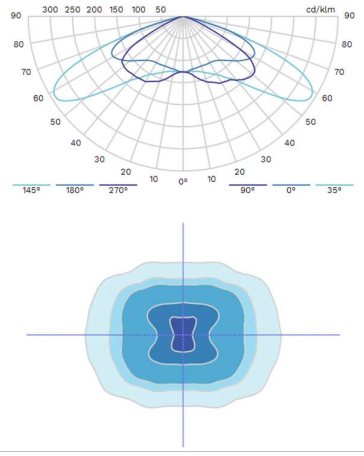

Drepturi de autor © Schréder SA - aprilie 2024. Toate drepturile rezervate. Specificațiile au caracter informativ și pot fi modificate fără notificare prealabilă.

LED Flux measurement

FORM-L-41 V1

713-TEST

NBN EN ISO/IEC 17025 :2017

Date : **22-08-23**

Operator : **FCE**

Filename : **2023_433.xml**

LEDs

Trademark : **Seoul**

Entry number : **43R315-3**

Type : **5050**

BIN Description : **W4**

Part number : **Unknown**

Color or CCT (Theorical) : **Neutral White**

Number of LEDs : **24**

Lenses

Trademark : **None**

Type : **None**

Power & Print

Type : **DELTA SM400-AR-4**

Print description : **03-52-266**

Active ☐

Picture

The publication of this measurement summary in another form than the original one is not allowed without agreement of the laboratory. This measurement summary concerns type tests on one or a series of specimens.

Sphere photometric measurement

Maximum flux : **5388** lm

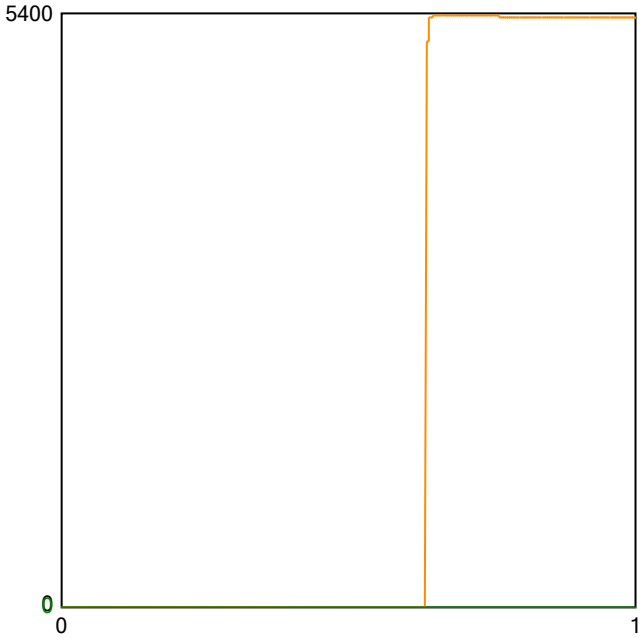

Operating condition

Position in sphere :

Ambient sphere T : **25,1** °C

Electrical measurement

- Secondary electrical measurement

Voltage :	**44,42**	V
Current :	**0,600**	A
Power :	**26,65**	W

→ LEDs light efficiency :

202,2 lm/W

224,5 lm/Led

- Primary electrical measurement

Voltage :	**N/A**	V
Current :	**N/A**	A
Power :	**N/A**	W
Cos φ :	**N/A**	

→ Driver losses : **N/A** %

→ LEDS & Driver light efficiency :

N/A lm/W

Description :

Flux @25°/600mA (200mA/led) - pcba Hi-Flex1 - 20 Seoul 5050 - bin: W4 - 740 - pcba N°3

Comment :

FORM-L-41 V1

713-TEST

NBN EN ISO/IEC 17025 : 2017

Colorimetry

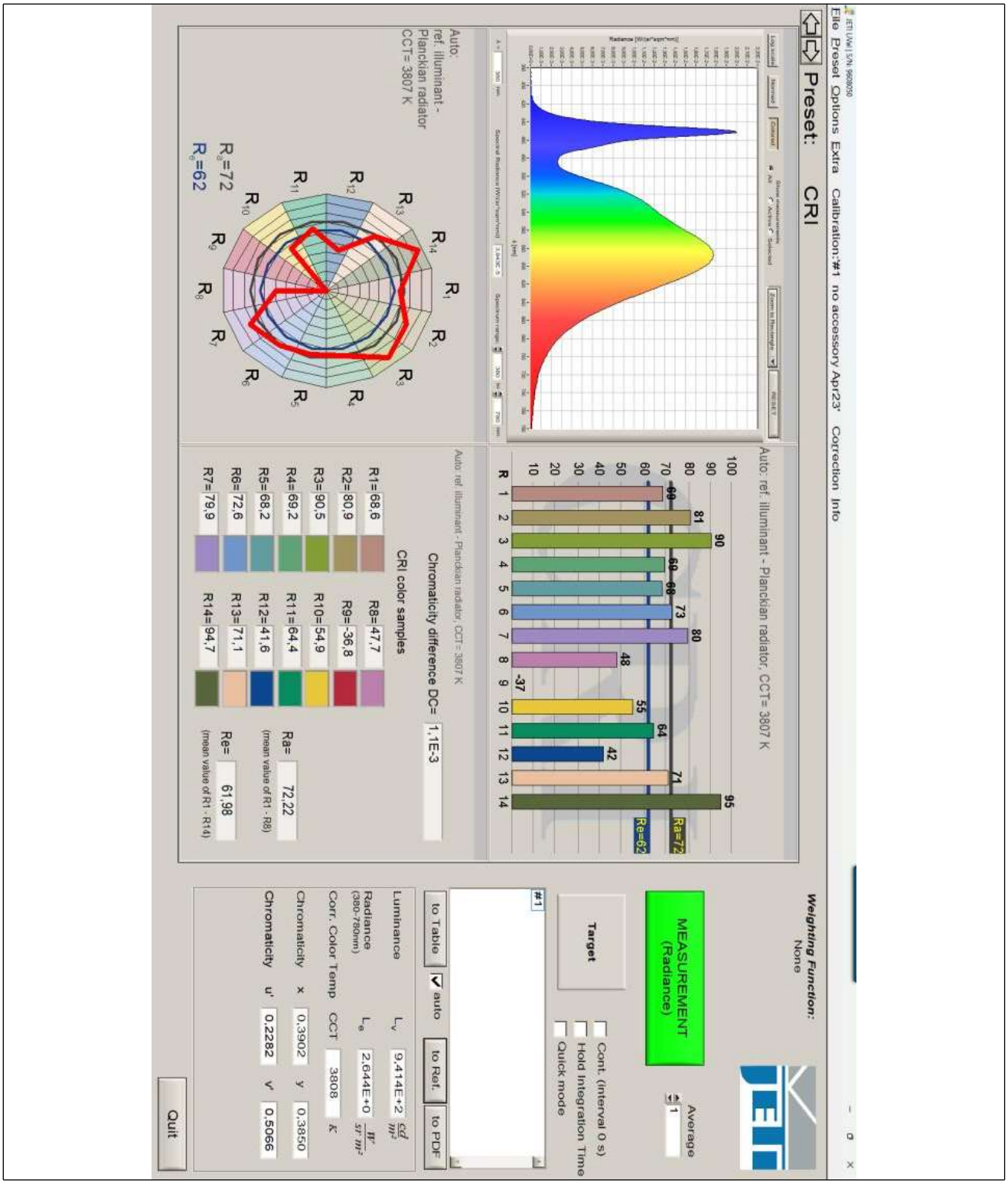

SCHREDER-PHOTOMETRY LABORATORY

LED

Testreport : Measurement of luminous intensity distribution related to the standard
NBN-EN 13032-1; NBN-EN 13032-4; CIE 121-1996; CIE S 025/E; IES LM-79-08 and procedures PT-P-01 and PT-P-02

rue de Mons, 3 B-4000 LIEGE - Tel : 04/224.71.40 - Fax : 04/224.25.90

Measurement for Schréder.

Origin	Production	Luminaire	Inclination	Request #
Schréder Magyarország Zrt.	Schréder Magyarország Zrt.	VITALUM 1	0°	FD44400

Source

Type	BIN	Trademark	Reference	# LEDs	Reflector
LED	W4	Seoul	5050	24	5424

Master	Reflector	No
	Schreder Led assembly Narrow Assembled 0,0°	5424

Protector Refractor Lens

Protector Glass Extra Clear Flat Smooth

Lens Seoul 5424

Laboratory observation

VITALUM 1 with 24 SEOUL 5050 bin W4 (NW740) HF1
Used flux for efficiency matrix calculation = 5388 lm - CCT = 3808 K - CRI = 72,22 (see sphere test report 2023/433 on appendix).

Purpose	Sample date	Sample #
DOC	04/10/2023	43R375

Observation

DOC VITALUM 1 with lenses 5424

Gonio measurement only @600mA - Coef I measured in sphere IPS2000
Flux coefficient multiplicator
From 600 to 200 mA : 0,349
From 600 to 400 mA : 0,684
From 600 to 800 mA : 1,295
From 600 to 1000 mA : 1,569
From 600 to 1050 mA : 1,632

Notes

The publication of this report in another form than the original one is not allowed without agreement of the laboratory.
This report concerns type tests on one or a series of specimens. All information but the measurements results are provided by the customer.

Asked by	Measured by	Approved by	Appendix		
VLG	CLD	RLABO	1	713-TEST NBN EN ISO/IEC 17025 :2017	57538

LUMINOUS INTENSITY DIAGRAM

Origin	Production	Luminaire	Inclination	Request #
Schréder Magyarország Zrt.	Schréder Magyarország Zrt.	VITALUM 1	0°	FD44400

Source	Type	BIN	Trademark	Reference	# LEDs	Reflector
	LED	W4	Seoul	5050	24	5424

Reflector	Schreder Led assembly Narrow Assembled 0,0°	No	5424
Matrices	**575381** Φ 0-90° = 4410lm - 90-180° = 0lm	Absolute measurement	
Protector Refractor Lens	Protector Glass Extra Clear Flat Smooth - VITALUM 1 Lens 24 x Seoul 5424		

Observation

Matrix in total flux@600mA

Electrical measurement on LED (#1) : Voltage = 43,92 V Current = 0,600 A Power = 26,37 W

Electrical measurement on driver (#1) : Voltage = 230,00 V Current = 0,134 A Power = 30,16 W PF = 0,975

Total luminaire power = 30,16 W : Lm/Watt = 146,24 lm/W

Driver #1 : SIGNIFY Xi FP 40W 0.3-1.0A SNLDAE 230V C123 sXt , PCBA : 03-52-266

Plane	I Peak	Peak position	Index	I zero	Laboratory ambiant t°	Measurement date
5 - 175	2365	57	S	1276	25,0°	25/10/2023
90	1479	26	D			
270	1276	0	G			

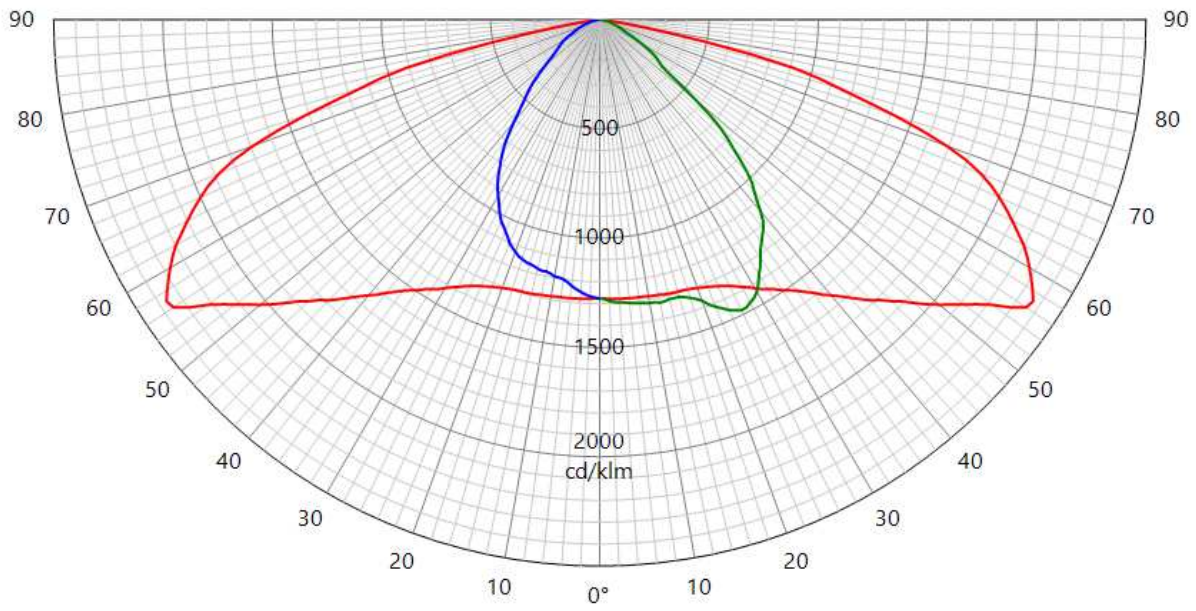

57538

LUMINOUS INTENSITY DIAGRAM

Origin	Production	Luminaire	Inclination	Request #
Schréder Magyarország Zrt.	Schréder Magyarország Zrt.	VITALUM 1	0°	FD44400

Source	Type	BIN	Trademark	Reference	# LEDs	Reflector
	LED	W4	Seoul	5050	24	5424

Reflector	Schreder Led assembly Narrow Assembled 0,0°	No	5424
Matrices	**575382** η 0-90° = 81,9% - 90-180° = 0,0%		Relative measurement
Protector Refractor Lens	Protector Glass Extra Clear Flat Smooth - VITALUM 1 Lens 24 x Seoul 5424		

Observation

Matrix in efficiency@600mA

Electrical measurement on LED (#1) :	Voltage = 43,92 V	Current = 0,600 A	Power = 26,37 W	
Electrical measurement on driver (#1) :	Voltage = 230,00 V	Current = 0,134 A	Power = 30,16 W	PF = 0,975

Total luminaire power = 30,16 W

Driver #1 : SIGNIFY Xi FP 40W 0.3-1.0A SNLDAE 230V C123 sXt , PCBA : 03-52-266

Plane	I Peak	Peak position	Index	I zero	Laboratory ambiant t°	Measurement date
5 - 175	439	57	S	237	25,0°	25/10/2023
90	275	26	D			
270	237	0	G			

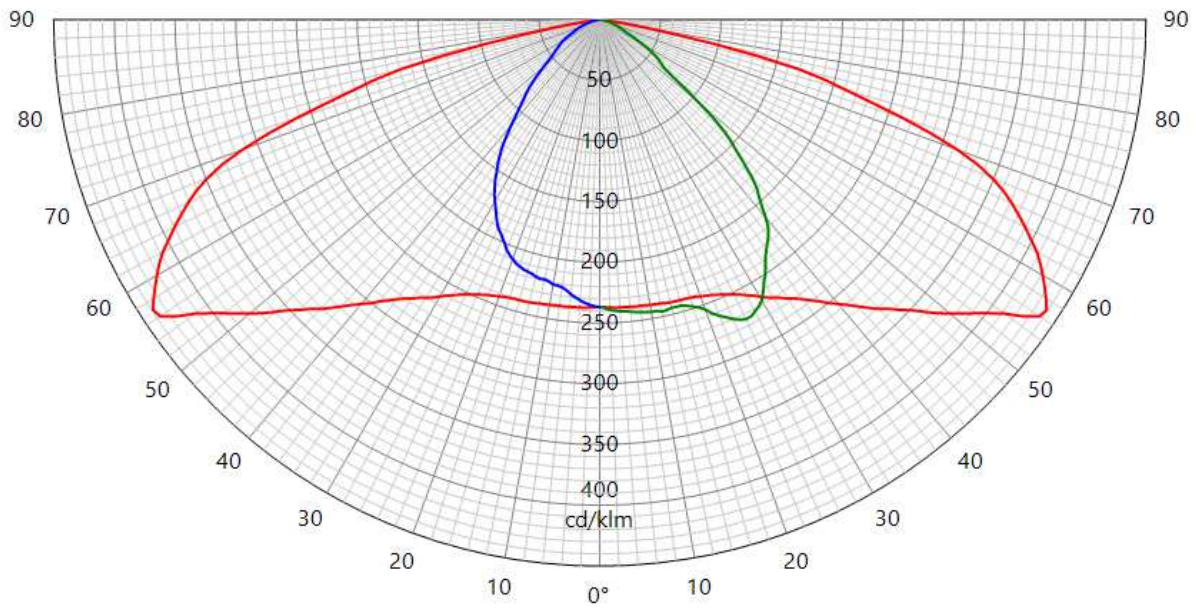

57538

INFORMATION

Measurement fulfil Standards:

NBN-EN 13032-1
NBN-EN 13032-4
NBN-EN 17025:2017
CIE 121-1996
LM79-08
CIE S 025

Measurement quantities measured:

Light distribution in relative or absolute photometry
Led alone cold lumen package
Led CCT and CRI
Power consumption of the fitting
Lm/watt

Electrical measurement, if not specified:

Primary values are AC with 50Htz frequency
Secondary values on SSL are DC

CCT, CRI and chromaticity coordinates: are measured in Ulbricht sphere.
If specified Main test report refer to sphere extra test report.

Light distribution are measured on gonio. If not otherwise specified, measurement is done at 50 Hz

Number of hours operated prior to measurement: if not otherwise specified, 0 hours (no aging).

Stabilization time: If not otherwise specified, a minimal stabilization time of 0.5 hour is applied; and measurement will start when it exists no more variation above 0.5% in 15 minutes

Total operating time of the product including stabilization:
45 minutes have to be added by measurement.
Minimal operating time is 75 minutes

Luminous intensity distribution: available on electronic file with
.mat format (internal Schréder format)
.ldt format (European standard)
.IES format (American standard)

Statement of uncertainties (K=2, 95% of confidence level):
Uncertainties calculated based on a typical Schréder fitting and PCBA

Intensity measurement: +/- 3.5%
Angle: +/- 0.5°
Flux: +/- 2.5%
Electrical DC
Power: +/- 0.15%
Voltage: +/- 0.10%
Current: +/- 0.20%
Electrical AC
Power: +/- 0.20%
Voltage: +/- 0.10%
Current: +/- 0.15%
Temperature: +/- 0.65%

ISP2000		JETI
CCT:	+/- 5%	+/-7.5%
CRI:	+/- 2%	+/-2.75%
x/y:	+/- 2%	+/-4.6%

lm/Watt: +/-3.4%

Measuring instruments in use:

Gonio 1
Type C with Moving mirror
Manufacturer: LMT Lichtmesstechnik GmbH Berlin, Helmholtzstrasse 9 10587 Berlin, Germany
Type: GO-DS 2000
Calibration: traceable to PTB (Physikalisch-Technische Bundesanstalt D-Braunschweig) and METAS (Federal Institute of Metrology, CH-Bern)
Photometric test distance: By default 10 meter, on request 30 meter.

Gonio 2
Type C
Manufacturer: Technoteam Bildverarbeitung, Werner-von-Siemens-Strasse 5 98693 Ilmenau, Germany
Calibration: traceable to BIPM (Bureau International des Poids et Mesures F-Sèvres)
Photometric test distance: Near Field

Sphere n°1
4p geometry
Manufacturer: LMT Lichtmesstechnik GmbH, Helmholtzstrasse 9 10587 Berlin, Germany
Type: UL2000 + U1000 V-Lambda photometer
Calibration: traceable to BIPM (Bureau International des Poids et Mesures F-Sèvres)

Sphere n°2
4p geometry
Manufacturer: Instrument Systems GmbH, Neumarkter Str. 83, 81673 Muenchen, Germany
Type ISP2000 + Spectroradiometer CAS120 and CAS140
Calibration: traceable to NIST

Colorimetric portable spectroradiometer
Manufacturer: JETI Technische Instrumente GmbH, Tatzendpromenade 2 07745 Jena
Type: SPECBOS 1201
Calibration: traceable to NIST

Multimeters
Manufacturer: Agilent
Type: 34401A
Calibration: traceable to BIPM (Bureau International des Poids et Mesures F-Sèvres)

Wattmeters
Manufacturer: Yokogawa
Type: WT210 and WT310
Calibration: traceable to BIPM (Bureau International des Poids et Mesures F-Sèvres)

Thermometers
Amarell Precision
Type: Liquid in glass N63833
Calibration: traceable to LBT (Laboratoire Belge de Thermométrie)

End of test report

Schréder
Experts in lightability™

DECLARAȚIE DE CONFORMITATE

CE

SCHRÉDER ROMANIA S.R.L., cu sediul în Cluj - Napoca, str. Corneliu Coposu, nr. 167A, Jud. Cluj, România, înregistrată la Registrul Comerţului cu nr. J12/1759/1998, membră a SCHRÉDER GROUP, în calitate de furnizori de aparate de iluminat marca SCHRÉDER

Declarăm pe propria răspundere că aparatul de iluminat: **VITALUM**

Echipare: VITALUM 1 (max. 36 LED-uri)
Clasa electrică: I & II
Caracteristici: max. 1050mA
Etanşeitate compartiment optic: IP 66
Etanşeitate compartiment aparataj: IP 66
Tensiune nominală: 230 V – 50 Hz

Cu condiția ca acesta să fie instalat, întreținut și utilizat în conformtate cu standardele de instalare și instrucțiunile producătorului, este în conformitate cu urmatoarele directive sau standarde:

- EN 60598-1: 2015 + A1: 2018
- EN 60598-2-3: 2003 + A1: 2011
- EN 62471: 2008
- EN 62493: 2010
- EN 55015: 2019 + A11:2020
- EN 61000-3-2: 2014
- EN 61000-3-3: 2013
- EN 61547: 2009
- EN 62722-1: 2016
- EN 62722-2-1: 2016
- EN 62696: 2018
- Directiva 2014/30/EU
- Directiva 2014/35/EU
- Directiva 2009/125/EC
- Directiva 2012/19/EU
- Directiva RoHS 2011/65/EU

SCHRÉDER ROMANIA S.R.L.
Director General,

Alexandru SIRCA

SCHREDER ROMANIA SRL CLUJ-NAPOCA

Eliberat,
Iunie 2024, Cluj-Napoca

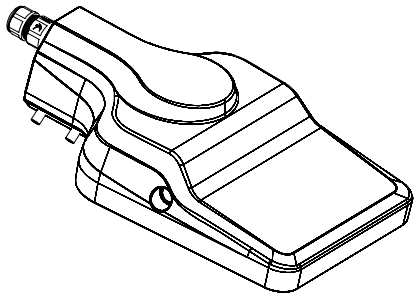

Schréder

Experts in lightability™

VITALUM

ENG	**INSTALLATION INSTRUCTIONS**	**FRA**	**INSTRUCTIONS DE MONTAGE**	**DEU**	**INSTALLATIONSANLEITUNG**
NLD	**INSTALLATIE INSTRUCTIES**	**ITA**	**ISTRUZIONI DI INSTALLAZIONE**	**SPA**	**INSTRUCCIONES DE INSTALACIÓN**
DAN	**INSTALLATIONSVEJLEDNING**	**SWE**	**INSTALLATIONSANVISNING**	**POR**	**INSTRUÇÕES DE INSTALAÇÃO**
SRP	**UPUTSTVA ZA INSTALACIJU**	**UKR**	**Інструкції з монтажу**	**RUS**	**Инструкции по установке**
POL	**INSTRUKCJE MONTAŻU**	**HUN**	**TELEPÍTÉSI ÚTMUTATÓ**	**RON**	**INSTRUCŢIUNI DE INSTALARE**
CHI	安装说明	**AR**	تعليمات التركيب		

	IEC EN60598				4-8m ✓ 8-12m ✓ 12-15m ✓ 15m< ✓	220-240V 50/60Hz	**IP**	**IK**
							66	**08**

LED colour code	722	727	730	740
Light source energy efficiency class	E	D	C	C

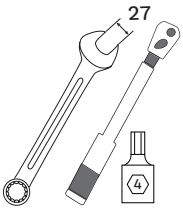

	Size 1
A (mm)	307
A1 (mm)	358
B (mm)	207
C (mm)	80
CxS (m²)	0.036
kg	2.4-2.9

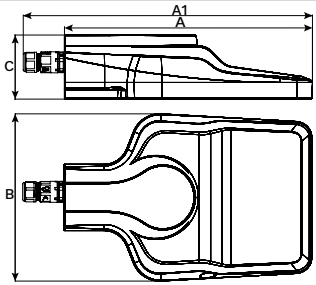

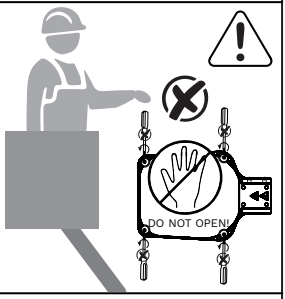

1a CABLE GLAND

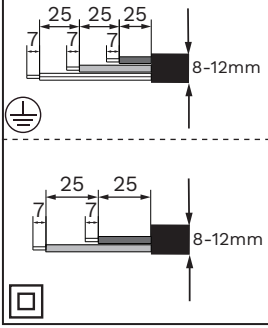

2a

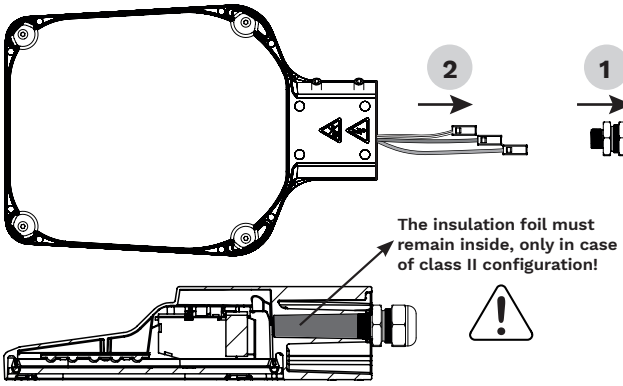

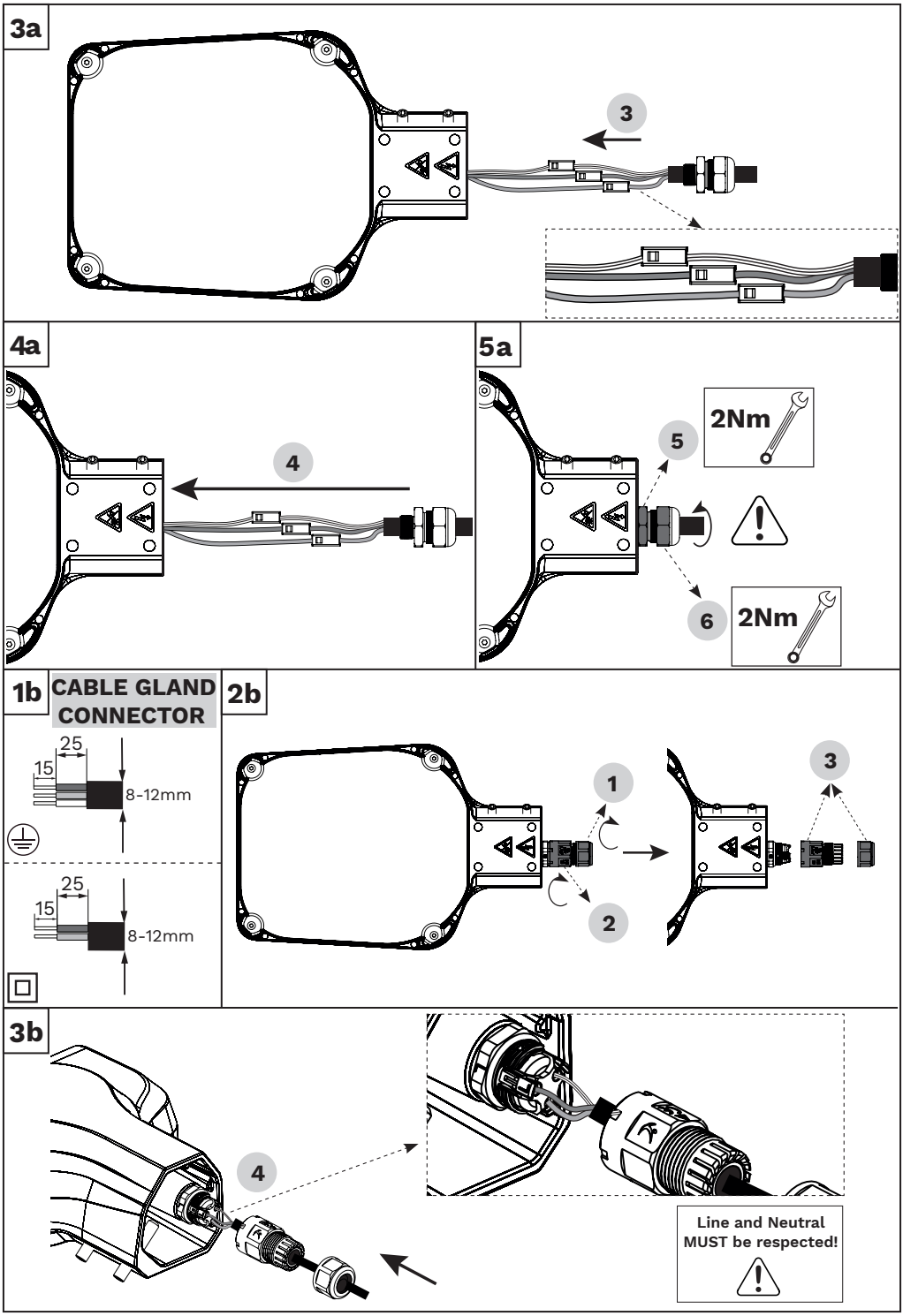
3a
3
4a
4
5a
5
2Nm
6
2Nm
1b
CABLE GLAND CONNECTOR
25
15
8-12mm
25
15
8-12mm
2b
1
2
3
3b
4
Line and Neutral MUST be respected!

4b

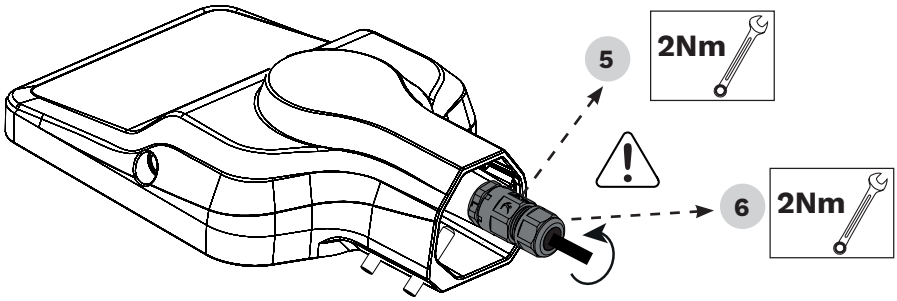
5
2Nm
6
2Nm

5

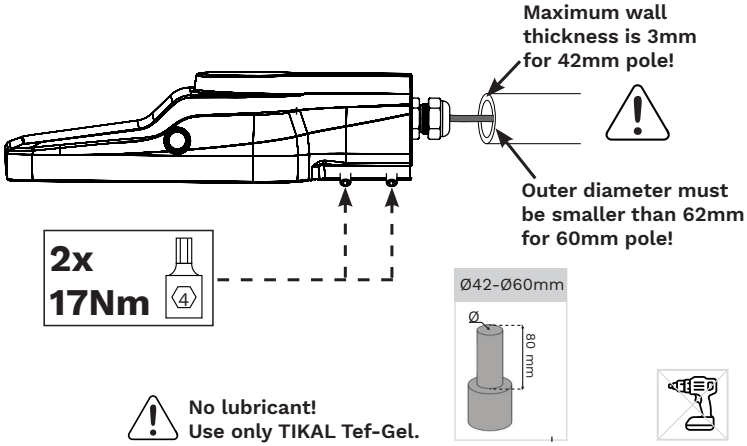
Maximum wall thickness is 3mm for 42mm pole!
Outer diameter must be smaller than 62mm for 60mm pole!
2x
17Nm
4
Ø42-Ø60mm
Ø
80 mm
No lubricant!
Use only TIKAL Tef-Gel.

6

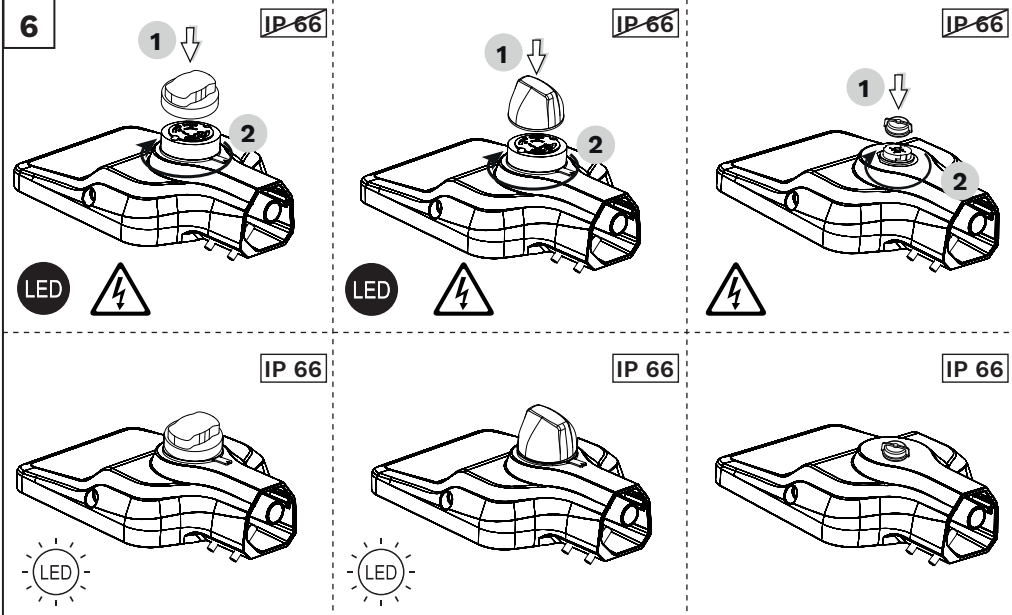
IP 66
1
2
LED
IP 66
1
2
LED
IP 66
1
2
IP 66
LED
IP 66
LED
IP 66

ENG

SAFETY INSTRUCTIONS
The light source contained in this luminaire shall only be replaced by the manufacturer or his service agent or a similar qualified person.

Always switch off the power prior to installation, maintenance or repair activities.

This product contains a light source of an energy efficiency class ... - see table.

In case of PVC insulated mains cable, the installer MUST ensure that the WHOLE cable is protected against climatic conditions, especially UV rays and rain, by making sure that the cable is contained inside the luminaire and pole

Y-connection: In case of damage to the wire, it has to be replaced only by the manufacturer, distributor or by an expert, to avoid risks.

SPA

INSTRUCCIONES DE SEGURIDAD
Solo el fabricante, un agente del servicio técnico o persona con cualificación similar puede sustituir la fuente de luz de este sistema de iluminación.

Apague siempre el interruptor de alimentación antes de realizar tareas de instalación, mantenimiento o reparación.

Este producto contiene una fuente de luz de clase de eficiencia energética ... -ver tabla.

En el caso de un cable aislado de PVC, el instalador DEBE asegurarse de que todo el cable esté protegido contra las condiciones climáticas, especialmente los rayos UV y la lluvia, asegurándose de que el cable esté dentro de la luminaria y el poste

Conexión en Y: si el cable se daña, solo debe reemplazarlo el fabricante, un distribuidor o un experto para evitar riesgos.

NLD

VEILIGHEIDSINSTRUCTIES
De lichtbron in deze armatuur dient uitsluitend door de fabrikant, diens onderhoudsvertegenwoordiger of een persoon met vergelijkbare kwalificaties te worden vervangen.

Schakel altijd de stroom uit voordat u aan installatie, onderhoud of reparaties begint.

Dit product bevat een lichtbron van energie-efficiëntieklasse ... -zie tabel.

In het geval van PVC-geïsoleerde voedingskabels MOET de installateur ervoor zorgen dat de GEHELE kabel wordt beschermd tegen klimaatomstandigheden, met name UV-stralen en regen, door ervoor te zorgen dat de kabel zich in het armatuur en de paal bevindt

Y-verbinding: in geval van schade aan de draad dient deze te worden vervangen door de fabrikant, de distributeur of door een expert, om risico's te vermijden.

DEU

SICHERHEITSHINWEISE
Die Lichtquelle in dieser Leuchte darf nur vom Hersteller bzw. von dessen Kundendienst oder einer ähnlich qualifizierten Person ausgetauscht werden.

Schalten Sie die Stromversorgung vor Installations-, Wartungs- und Reparaturarbeiten stets ab.

Dieses Produkt enthält eine Lichtquelle der Energieeffizienzklasse ... -siehe Tabelle.

Bei Verwendung eines PVC-isolierten Netzkabels muss der Installateur sicherstellen, dass das gesamte Kabel vor klimatischen Bedingungen -insbesondere vor UV-Strahlen und Regen- geschützt ist, indem sichergestellt wird, dass das Kabel in der Leuchte und dem Mast verschlossen ist

Y-Verbindung: Falls die Leitung beschädigt ist, darf diese nur vom Hersteller, dem Händler oder einem Experten ersetzt werden, um Risiken zu vermeiden.

POL

INSTRUKCJA BEZPIECZEŃSTWA
źródło światła zamontowane w tej oprawie może być wymieniane wyłącznie przez producenta, pracownika serwisu lub inną wykwalifikowaną osobę.

Przed rozpoczęciem instalacji, konserwacji lub naprawy należy bezwzględnie odłączyć zasilanie elektryczne.

Produkt zawiera źródło światła o klasie efektywności energetycznej ... -patrz tabela.

W przypadku kabla sieciowego izolowanego PCV instalator MUSI upewnić się, że kabel CAŁY jest chroniony przed warunkami klimatycznymi, w szczególności przed promieniowaniem UV i deszczem, upewniając się, że kabel znajduje się wewnątrz oprawy i słupa.

Połączenie Y: ze względów bezpieczeństwa uszkodzony przewód powinien zostać wymieniony wyłącznie przez producenta, dystrybutora lub wykwalifikowanego elektryka.

RUS

инструкция безопасности
замену источника света для этого светильника должен выполнять только произ водитель, сервисный агент производителя или специалист с аналогичной квалификацией.

Перед проведением установки, сервисного обслуживания или ремонта всегда отключайте питание устройства.

Этот продукт содержит источник света с классом энергоэффективности ... -см. таблицу.

В случае кабеля питания с ПВХ изоляцией, монтажник ДОЛЖЕН обеспечить защиту ВСЕГО кабеля от воздействия климатических условий, особенно от ультрафиолетовых лучей и дождя, убедившись, что кабель находится внутри светильника и опоры.

Подключение Y: в случае повреждения кабеля его замена производится только производителем, дистрибьютором или экспертом.

FRA

INSTRUCTIONS DE SECURITE
La source lumineuse contenue dans ce luminaire doit être uniquement remplacée par le fabricant, son agent de maintenance ou une autre personne disposant des qualifications appropriées.

Mettez toujours l'appareil hors tension avant toute opération d'installation, d'entretien ou de réparation.

Ce produit contient une source lumineuse de classe d'efficacité énergétique... -voir tableau.

Dans le cas d'un câble secteur isolé en PVC, l'installateur doit s'assurer que le câble entier est protégé contre les conditions climatiques, en particulier les rayons UV et la pluie, en s'assurant que le câble est contenu à l'intérieur du luminaire et du poteau

Connexion Y : si le câble est endommagé, il ne peut être remplacé que par le fabricant, par le distributeur ou par un expert, afin d'éviter tout risque.

ITA

ISTRUZIONI DI SICUREZZA
La sorgente di luce contenuta in questo sistema di illuminazione dovrà essere sostituita solo dal produttore, dal suo agente di servizio o da una persona con qualifica similare.

Staccare sempre il filo della corrente prima di iniziare operazioni di installazione, manutenzione o riparazione.

Questo prodotto contiene una sorgente luminosa di classe di efficienza energetica ... -vedi tabella.

In caso di cavo di alimentazione isolato in PVC, l'installatore DEVE garantire che il cavo INTERO sia protetto dalle condizioni climatiche, in particolare dai raggi UV e dalla pioggia, assicurandosi che il cavo sia contenuto all'interno del corpo illuminante e del palo

Collegamento Y: in caso di danneggiamento, il cavo deve essere sostituito esclusivamente dal costruttore, dal distributore o da un tecnico esperto per evitare rischi.

POR

INSTRUÇÕES DE SEGURANÇA
A fonte de luz no interior deste candeeiro deve ser substituída apenas pelo fabricante, pelo seu técnico de assistência ou por uma pessoa com qualificação equivalente.

Desligue sempre a alimentação antes de proceder a actividades de instalação, manutenção ou reparação.

Este produto contém uma fonte de luz da classe de eficiência energética ... -ver tabela.

No caso de cabo de alimentação com isolamento em PVC, o instalador DEVE assegurar que TODO o cabo é protegido das condições climáticas, especialmente raios UV e chuva, certificando-se que o cabo está contido dentro da luminária e da coluna.

Ligação Y: em caso de danos no fio, este tem de ser substituído apenas pelo fabricante, distribuidor ou por um técnico especializado, para evitar riscos.

DAN

SIKKERHEDSINSTRUKTIONER
Lyskilden i dette armatur må kun udskiftes af producenten, af en vedligeholdelsesvirksomhed udpeget af producenten eller af en tilsvarende kvalificeret virksomhed.

Sluk altid for strømmen inden påbegyndelse af installation, vedligeholdelse eller reparation.

Dette produkt indeholder en lyskilde i energieffektivitetsklasse ... -se tabel.

I tilfælde af PVC-isoleret ledning SKAL elektrikeren sikre, at HELE kablet er beskyttet mod klimatiske forhold, dette gælder især UV-stråler og regn. Elektrikeren skal derfor sørge for, at kablet forbliver inde i armaturet og masten.

Type Y montering: Hvis det eksterne kabel eller ledning på dette armatur er beskadiget, må det kun udskiftes af producenten
eller af en servicepartner til producenten eller tilsvarende kvalificeret person, for at undgå skader.

RON

INSTRUCŢIUNI DE EXPLOATARE
Sursa de lumină din acest corp de iluminat trebuie înlocuită numai de producător sau de reprezentantul său de service sau o persoană ce deține calificări similare.

Opriţi întotdeauna alimentarea electrică înainte de lucrările de instalare, întreţinere sau reparaţii.

Acest produs conține o sursă de lumină din clasa de eficiență energetică.....-conform tabel

În cazul cablului de alimentare cu izolație din PVC, instalatorul TREBUIE să se asigure că TOT cablul este protejat împotriva condițiilor climatice, mai ales împotriva razelor UV și a ploii, asigurându-se că acest cablu este plasat în interiorul aparatului de iluminat și al stâlpului

Conexiune Y: În caz de deteriorare a firului, acesta trebuie înlocuit numai de către producător, distribuitor sau un expert, pentru evitarea riscurilor.

SWE

SÄKERHETSINSTRUKTIONER
Ljuskällan som monteras i denna armatur får endast ersättas av en Schréder-anställd eller annan kvalificerad person.

Stäng alltid av strömmen före installation, underhåll eller reparation.

Denna produkt innehåller en ljuskälla av energieffektivitetsklass ... -se tabell.

Vid PVC-isolerad kabel måste installatören se till att hela kabeln är skyddad mot klimatförhållanden, särskilt UV-strålar och regn, genom att se till att kabeln monteras inuti armaturen och stolpen

Typ Y-anslutning:
Om den externa kabeln eller ledningen på denna armatur är skadad, får den endast bytas ut av tillverkaren eller av en servicepartner till tillverkaren eller motsvarande kvalificerad person, för att undvika skador

HUN

BIZTONSÁGI ÚTMUTATÓ
A lámpatestben található fényforrást kizárólag a gyártó, szervizképviselője vagy hivatalos szakszervíz szakembere cserélheti ki.

A szerelés, karbantartás és javítás előtt minden esetben végezzen áramtalanítást.

Ez a termék ... energiahatékonysági osztályba tartozó fényforrást tartalmaz - lsd táblázat.

PVC szigetelésű tápkábel esetén a telepítőnek biztosítania KELL, hogy a TELJES kábel védett legyen az éghajlati viszonyoktól, különösen az UV sugárzástól és az esőtől, ügyelve arra, hogy a kábel a lámpatest és az oszlop belsejében legyen.

Y-csatlakozó: A sérült vezetéket kizárólag a gyártó, forgalmazó vagy szakember cserélheti ki a kockázatok elkerülése végett.

SRP

UPUTSTVA
Izvor svetla u ovom rasvetnom telu može da zameni samo proizvođač, njegov servisni agent ili na sličan način kvalifikovana osoba.

Uvek isključite napajanje pre instalacije, održavanja ili popravke.

Ovaj proizvod sadrži izvor svetlosti klase energetske efikasnosti ... -pogledajte tabelu.

U slučaju napojnog kabla sa PVC izolacijom, izvođač MORA obezbediti zaštitu CELOG kabla od klimatskih uslova, posebno UV zračenja i kiše, tako što će osigurati da se kabal nalazi unutar svetiljke i stuba.

Y-veza: U slučaju oštećenja žice zamenu mora da obavi isključivo proizvođač, distributer ili stručnjak kako bi se izbegao rizik.

UKR

інструкція безпекі
Джерело світла, що міститься у цьому світильнику, повинен заміняти лише виробник, його сервісний агент або кваліфікована особа.

Завжди вимикайте живлення перед встановленням, доглядом або ремонтом.

Цей продукт містить джерело світла класу енергоефективності ... -див. табл.

У випадку кабелю живлення із ПВХ ізоляцією, монтажник ПОВИНЕН забезпечити захист ВСЬОГО кабелю від впливу кліматичних умов, особливо від ультрафіолетових променів та дощу, переконавшись, що кабель знаходиться всередині світильника та опори

Y-з'єднання: у разі пошкодження дроту його має замінити лише виробник, дистриб'ютор чи експерт, щоб запобігти ризикам.

CHI

安全守则

该灯具内的光源仅可由施莱德员工、指定代理商或具备类似资质的人员进行更换。

在安装、维护和维修灯具之前必须首先切断电源。

本产品包含一个能效等级的光源.....见表。

如果选择PVC主电缆，必须确保整个电缆被很好的保护以抵御恶略气候状况，尤其是紫外线和雨水，而且要确保电缆被灯具和灯杆完全覆盖。

Y类附件：
如果灯具外部电缆被破坏，电缆必须被制造商或服务代理商或者有资质的人员及时更换从而避免伤害。

AR

تعليمات السلامه:
في حاله الحاجه لتغير مصدر الضوء، يتم ذلك من خلال الشركه.
المصنعه او الوكيل المخول لعمل ذلك او شخص موهل لذلك
دائما افصل الدائره الكهربائيه قبل تركيب او صيانه الجهاز.
تحذير: هذا المنتج مصنف ضمن مجموعه المخاطر 2
خطر انبعاث اشعاع ضوئي , لا تنظر مباشره الى الجهاز و هو مضاء
لان ذلك مؤذي للعين. الجهاز يجب ان يركب بشكل يضمن ان التحديق بمصدر.

يجب على الشخص الذي يوصل الجهاز بالدائره الكهربائيه التاكد من ان محمي من التاثيرات المناخيه و خاصه الاشعه فوق البنفسجيه و المطر من خلال التاكد ان الكابل محوي بداخل العمود و الجهاز
في حاله الحاجه لتغير الاسلاك الداخليه , يتم ذلك من خلال الشركه.
المصنعه او الوكيل المخول لعمل ذلك او شخص مخول لذلك
دائما افصل الدائره الكهربائيه قبل تركيب او صيانه الجهاز.

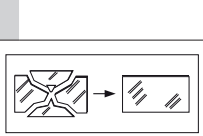

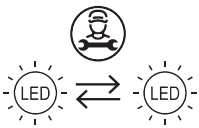

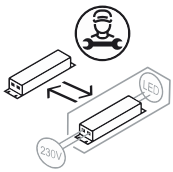

Copyright © Schréder S.A. 2024 - Executive Publisher: Stéphane Halleux B-4000 Liége, Rue de Mons 3 (Belgium)
The information, descriptions and illustrations herein are only of an indicative nature and subject to changes without notice.

22
PAP

Risk Group
IEC/EN 62471 Photobiological Safety
Assessment based on IEC/TR 62778, C_{max}

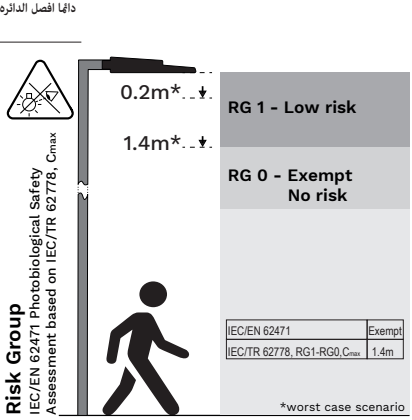

LICENCE

No. 23055

Issued to:
Applicant:
Schréder S.A.
Rue de Mons, 3
4000 Liège
Belgium

Licensee:
Schréder SA
Rue de Lusambo, 67
1190 BRUXELLES
Belgium

Product	:	road, square and street lighting
Trade name(s)	:	SCHREDER
Type(s)/model(s)	:	VITALUM

The product and any acceptable variation thereto is specified in the annex to this licence and the documents therein referred to.

SGS CEBEC hereby declares that the above-mentioned product has been certified on the basis of:
- a type test according to the standard specified in annex
- an inspection of the production location
- a certification agreement with the number 1173

SGS CEBEC hereby grants the right to use the CEBEC certification mark
The ENEC/CEBEC certification mark may be applied to the product as specified in this licence for the duration of the ENEC/CEBEC certification agreement and under the conditions of the ENEC/CEBEC certification agreement.

This licence is issued on : 16-04-2024

ir. C. Lana,
Certification Manager

© Only integral publication of this certificate, including the annex, is allowed
This certificate is only valid combined with the publication on the following web address: www.sgs.com/ee

SGS Belgium NV-Division SGS CEBEC
Business Riverside Park
Bld Internationalelaan 55 Build. A
B-1070 Brussels
Tel.+32(0)2 556 00 20 Fax.+32(0)2 556 00 36

This certificate is issued by the company under its General Conditions for Certification Services accessible at http://www.sgs.com/terms_and_conditions.htm. Attention is drawn to the limitations of liability defined therein and in the Test Report herein mentioned which findings are reflected in this Certificate. Any unauthorized alteration, forgery or falsification of the content or appearance of this document is unlawful and offenders may be prosecuted to the fullest extent of the law.

SPECIFICATION OF THE CERTIFIED PRODUCT

Product data

Product	:	road, square and street lighting
Trade name(s)	:	SCHREDER
Type(s)/Model(s)	:	VITALUM
description	:	Street lighting
rated voltage (Un)	:	220-240 V
rated frequency	:	50-60 Hz
rated power	:	max. 63 W
rated current (In)	:	max. 350 mA/LED
class	:	class I
degree of protection	:	IP66
resistance to impact (IK)	:	IK08
lamp(s)	:	max. 36 LED HF1 + HF2 (Seoul 5050)
rated ambient temperature (ta)	:	max. 45°C

TESTS

Test requirements

EN 60598-2-3:2003 + A1:2011
EN IEC 60598-1:2021 + A11:2022

Test results

The test results are laid down in certification file 634191/01.

Remarks

This certificate is based on test report No. P1626-I.

Conclusion

The examination proved that all certification requirements were met.

Reviewed by, project leader : Christian Maes - 16/04/2024

Certification Manager :

2024-04-16

SGS Belgium NV-Division SGS CEBEC
Business Riverside Park
Bld Internationalelaan 55 Build. A
B-1070 Brussels
Tel.+32(0)2 556 00 20 Fax.+32(0)2 556 00 36

FACTORY LOCATION(S)

Schreder TOV
Vul. Mykulynetska 46B
46000 TERNOPIL
Ukraine

Schreder (China) Lighting Industrial Co., Ltd
No.40 Xinye 2 Street
Tianjin Economic Technological Development Zone West Zone
300462 Tianjin City, P.R.China
China

Comatelec Schréder
ZAC de l'échangeur 11 rue Louis BECHEREAU
18000 Bourges
France

Socelec S.A.
Av. de Roanne, 66
Poligono Industrial "EL HENARES"
19180 MARCHAMALO (GUADALAJARA)
Spain

Schréder Iluminação S.A.
Rua da Fraternidade Operária, n° 3
2794-089 CARNAXIDE, OEIRAS
Portugal

Schréder Hungary Plc.
Tópart 2
2084 PILISSZENTIVAN
Hungary