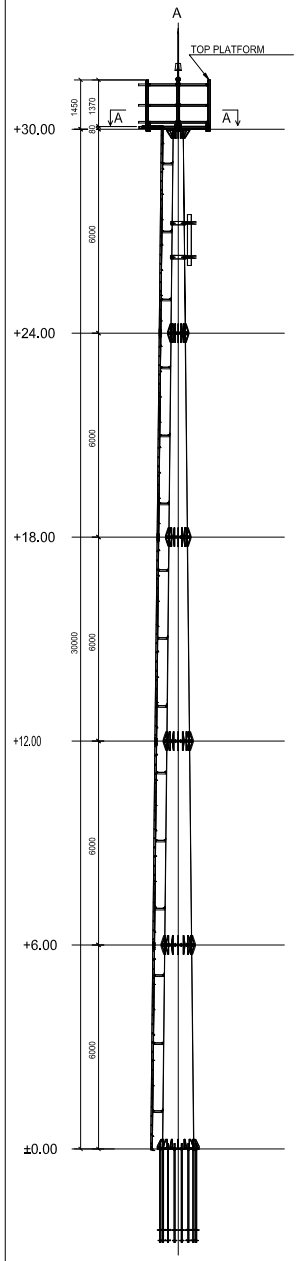

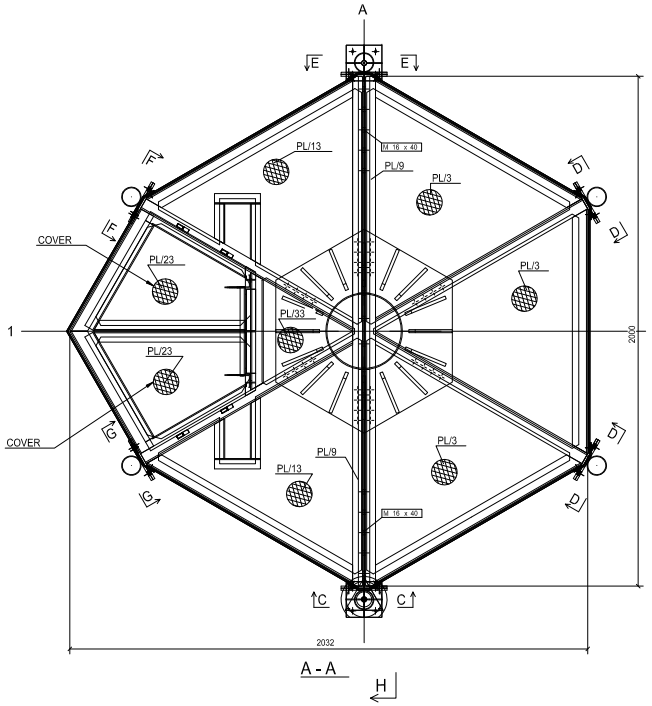

A - A

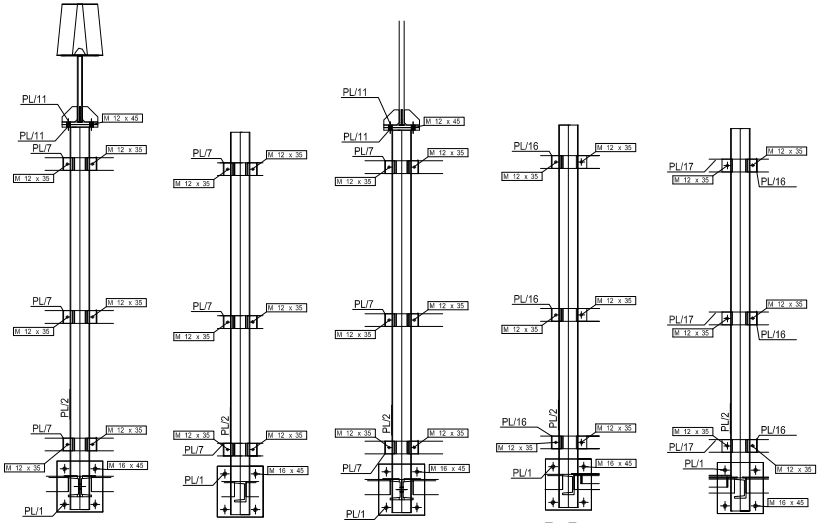

C - C D - D E - E F - F G - G

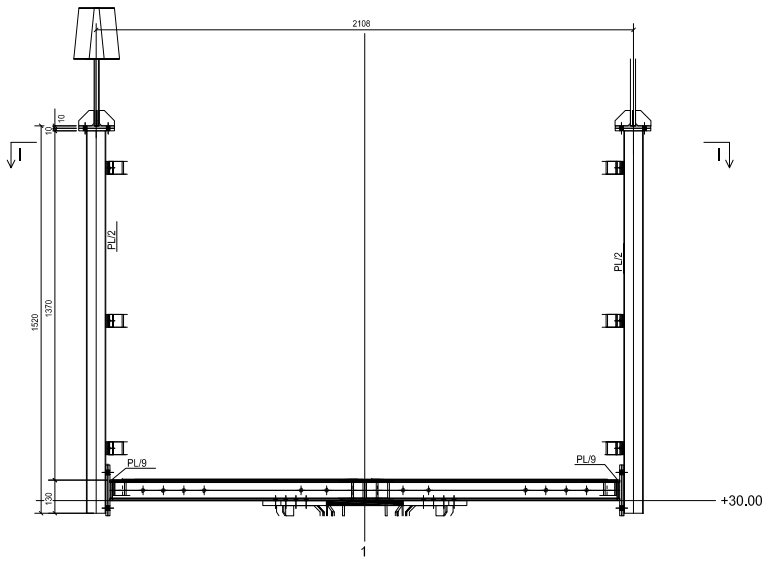

H - H

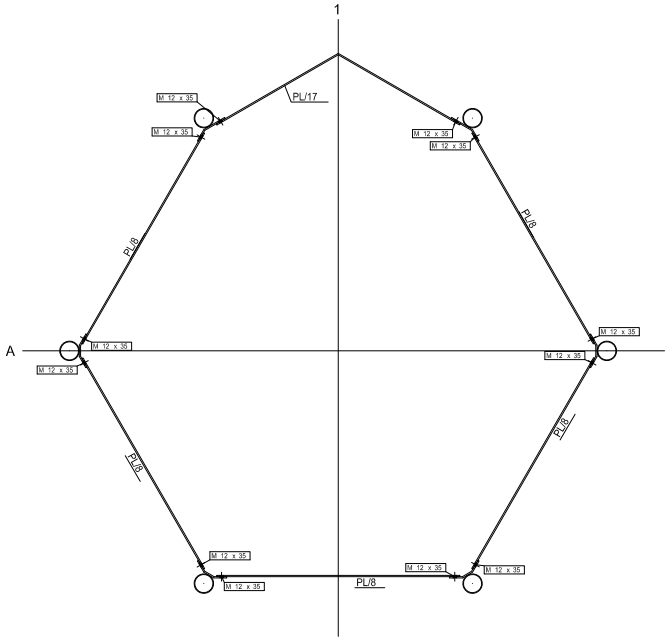

I - I

PLATFORM ERECTION PLAN

REV	DATE	DESCRIPTION	DRW	CHK	APP
0	16.01.2009	FOR INFORMATION	D.K.	G.K.	G.K.

CUSTOMER :

CONTRACTOR :

BARAN ÇELİK VE GALVANİZ SANAYİ LTD. ŞTİ.

TITLE:

30M MONOPOLE
GSM ANTENNA TOWER
PLATFORM MARKING PLAN

PROJECT	NAME	DATE	SIGNATURE
DRAWN	D.KÖSE	07.01.2010	
CHECKED	G. KIRGIZ	07.01.2010	
APPROVED	G. KIRGIZ	07.01.2010	
SCALE: 1:10 1:75		SHEET SIZE:	A1

BARAN DRAWING No: 6GENPLT-GP-001

REV 0