Dissecting and Grasping Forceps

CLICK'*line*® – rotating, dismantling, insulated, with connector pin for unipolar coagulation

KARL STORZ — ENDOSKOPE

unipolar

5 mm

Size 5 mm

Operating instruments, **lengths 30 and 36 cm,** for use **with trocars size 6 mm**

Operating instruments, **length 43 cm,** for use with telescopes with inbuilt working channel and trocars size 6 mm

Length	Handle						
	33151	33152	33153	33156	33121	33125	33149
30 cm							NEW
36 cm							
43 cm							

Double action jaws

Working Insert	Complete Instrument						
33210 MH	33251 MH	33252 MH	33253 MH	33256 MH	33221 MH	33225 MH	33249 MH
33310 MH	33351 MH	33352 MH	33353 MH	33356 MH	33321 MH	33325 MH	33349 MH

⊢— 23 —⊣

CLICK'*line*® **Dissecting and Grasping Forceps,** atraumatic

33210 DF	33251 DF	33252 DF	33253 DF	33256 DF	33221 DF	33225 DF	33249 DF
33310 DF	33351 DF	33352 DF	33353 DF	33356 DF	33321 DF	33325 DF	33349 DF
33410 DF	33451 DF	33452 DF	33453 DF	33456 DF	33421 DF	33425 DF	33449 DF

⊢— 17 —⊣

CLICK'*line*® **Dissecting and Grasping Forceps,** atraumatic

33210 DN	33251 DN	33252 DN	33253 DN	33256 DN	33221 DN	33225 DN	33249 DN
33310 DN	33351 DN	33352 DN	33353 DN	33356 DN	33321 DN	33325 DN	33349 DN
33410 DN	33451 DN	33452 DN	33453 DN	33456 DN	33421 DN	33425 DN	33449 DN

⊢— 18 —⊣

CLICK'*line*® **Dissecting and Grasping Forceps,** "dolphin nose"

33210 KJ	33251 KJ	33252 KJ	33253 KJ	33256 KJ	33221 KJ	33225 KJ	33249 KJ
33310 KJ	33351 KJ	33352 KJ	33353 KJ	33356 KJ	33321 KJ	33325 KJ	33349 KJ
33410 KJ	33451 KJ	33452 KJ	33453 KJ	33456 KJ	33421 KJ	33425 KJ	33449 KJ

⊢— 13 —⊣

CLICK'*line*® REDDICK-OLSEN **Dissecting and Grasping Forceps**

7-11₁

Digitally signed by Gherman Irina
Date: 2026.08.05 12:18:41 EEST
Reason: MoldSign Signature
Location: Moldova
MOLDOVA EUROPEANĂ

Fan Retractors

Size 5 mm

Operating instrument, **length 36 cm,**
for use **with trocars size 6 mm**

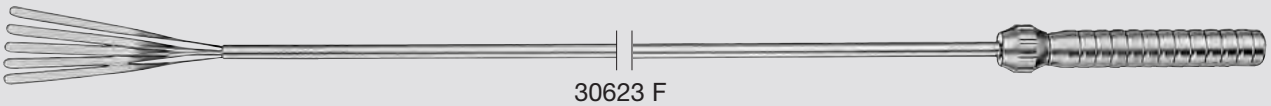

30623 F

30623 F	**Fan Retractor,** dismantling, retractable, size 5 mm, length 36 cm, opening angle in extended position approx. 16°

Size 10 mm

Operating instrument, **length 36 cm,**
for use **with trocars size 11 mm**

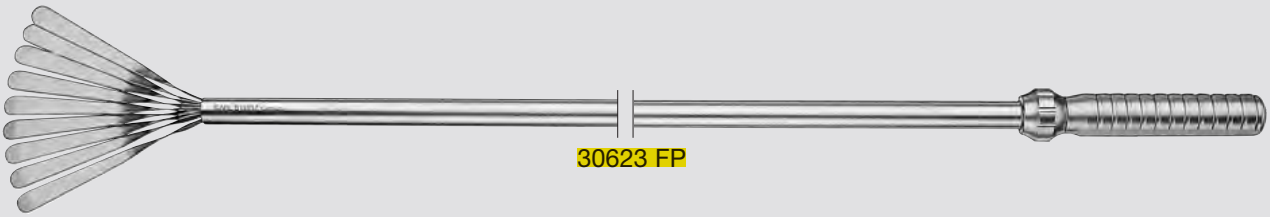

30623 FP

30623 FP	**Fan Retractor,** dismantling, retractable, size 10 mm, length 36 cm, opening angle in extended position approx. 60°

Size 12 mm

Operating instrument, **length 36 cm,**
for use **with trocars size 13 mm**

26173 FP

26173 FP	**Fan Retractor,** dismantling, retractable, with proximal rotating wheel for expansion, size 12 mm, length 36 cm, opening angle in extended position approx. 60°

2-98$_5$

Components/Spare Parts see chapter 18

HOPKINS® Telescopes and Telescope Guide Sheaths

KARL STORZ — ENDOSKOPE

10320 AA

10320 SP
10328 SP

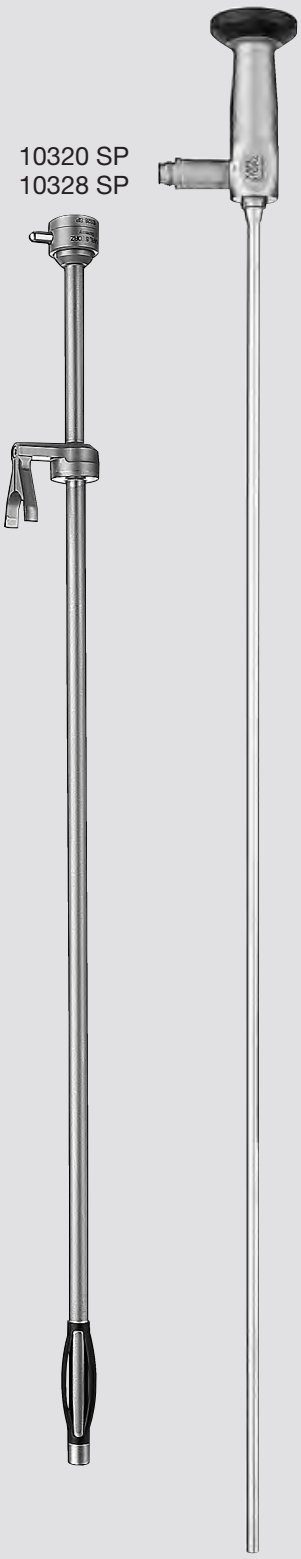

Special Features:

- **Precise positioning of the telescope in the bronchoscope during insertion**
- **The telescope guide sheath prevents rod lenses from breaking if exposed to very large loads during intubation with a rigid bronchoscope**

For use with Bronchoscopes 10318 and Optical Forceps 10350

10320 AA **HOPKINS® Straight Forward Telescope 0°,** diameter 5.5 mm, length 50 cm, **autoclavable,** fiber optic light transmission incorporated, color code: green

10320 BA **HOPKINS® Forward-Oblique Telescope 30°,** diameter 5.5 mm, length 50 cm, **autoclavable,** fiber optic light transmission incorporated, color code: red

10320 DA **HOPKINS® Lateral Telescope 90°,** diameter 5.5 mm, length 50 cm, **autoclavable,** fiber optic light transmission incorporated, color code: blue

For use with Bronchoscopes 10318 and Optical Forceps 10352

10328 AA **HOPKINS® Straight Forward Telescope 0°,** diameter 4.5 mm, length 50 cm, **autoclavable,** fiber optic light transmission incorporated, color code: green

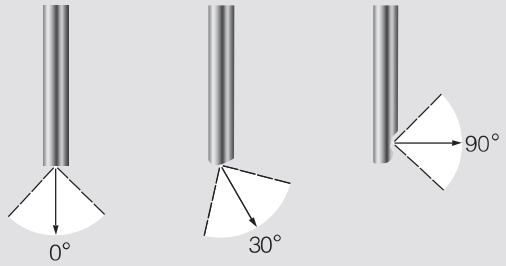

10320 AA
10328 AA

10320 BA

10320 DA

NEW 10320 SP **Telescope Guide Sheath,** for use with Bronchoscopes 10318 BP/CP/DP, 10318 ER/GL/FL and HOPKINS® Telescopes 10320 AA/BA

NEW 10328 SP **Telescope Guide Sheath,** for use with Bronchoscopes 10318 BP/CP/DP, 10318 ER/GL/FL and HOPKINS® Telescope 10328 AA

5-16

Container for the Sterilization and Storage of Telescopes see HYGIENE catalog

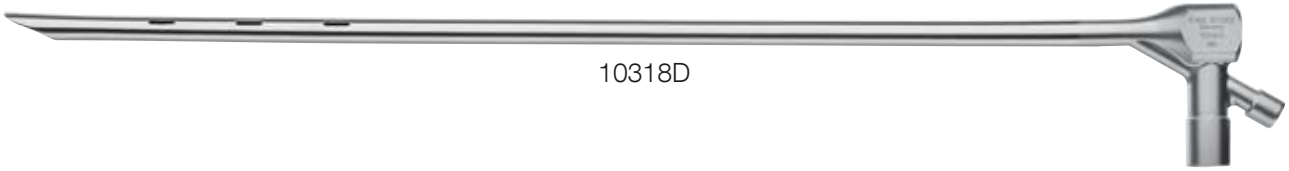

10318D

10318DK **Universal Bronchoscope,** size 6.5,
outer diameter 9.2 mm, inner diameter 8.5 mm,
length 43 cm,
consisting of:
10318D **Universal Bronchoscope**
10318L **Fiber Optic Light Carrier**

Bronchoscopes

10318L

10318B

10318BK **Universal Bronchoscope,** size 8.5,
outer diameter 11.2 mm, inner diameter 10.5 mm,
length 43 cm,
consisting of:
10318B **Universal Bronchoscope**
10318L **Fiber Optic Light Carrier**

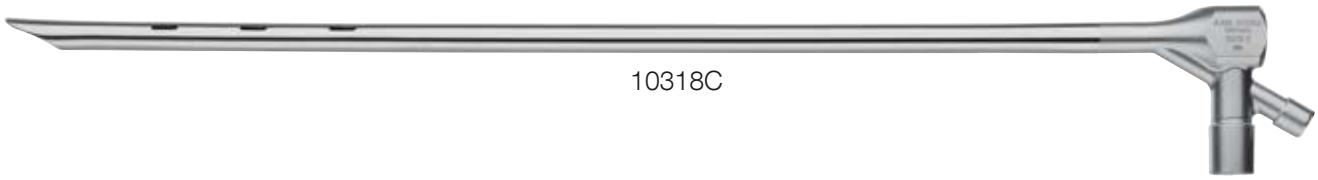

10318C

10318CK **Universal Bronchoscope,** size 7.5,
outer diameter 10.2 mm, inner diameter 9.5 mm,
length 43 cm,
consisting of:
10318C **Universal Bronchoscope**
10318L **Fiber Optic Light Carrier**

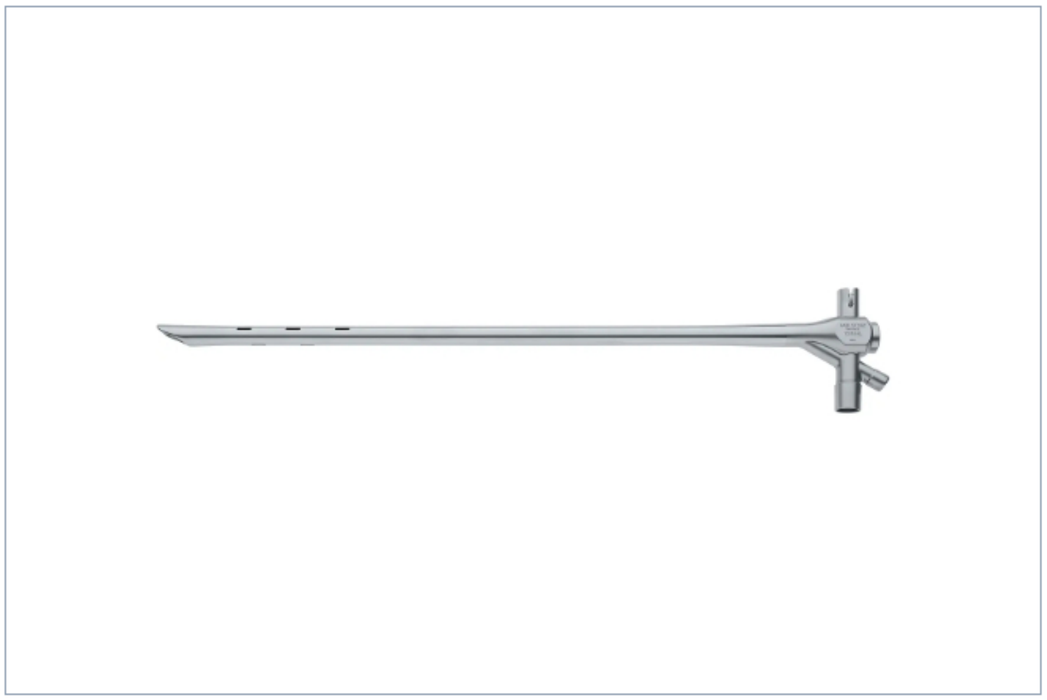

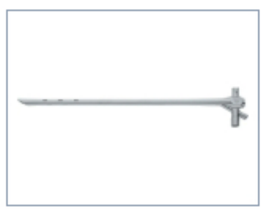

Item no: 10318FL

Bronchoscope, 43 cm, size 12 mm

Quantity:

– 1 +

Add to My Quote List

Technical details | Documents & Films | Product group / field of application

Sheath outer diameter	12 mm
Outer diameter at distal end	14.8 mm
Size	12
Inner diameter	11 mm
Working length	43 cm
Universal Bronchoscope	No
Field of application	Bronchoscopy

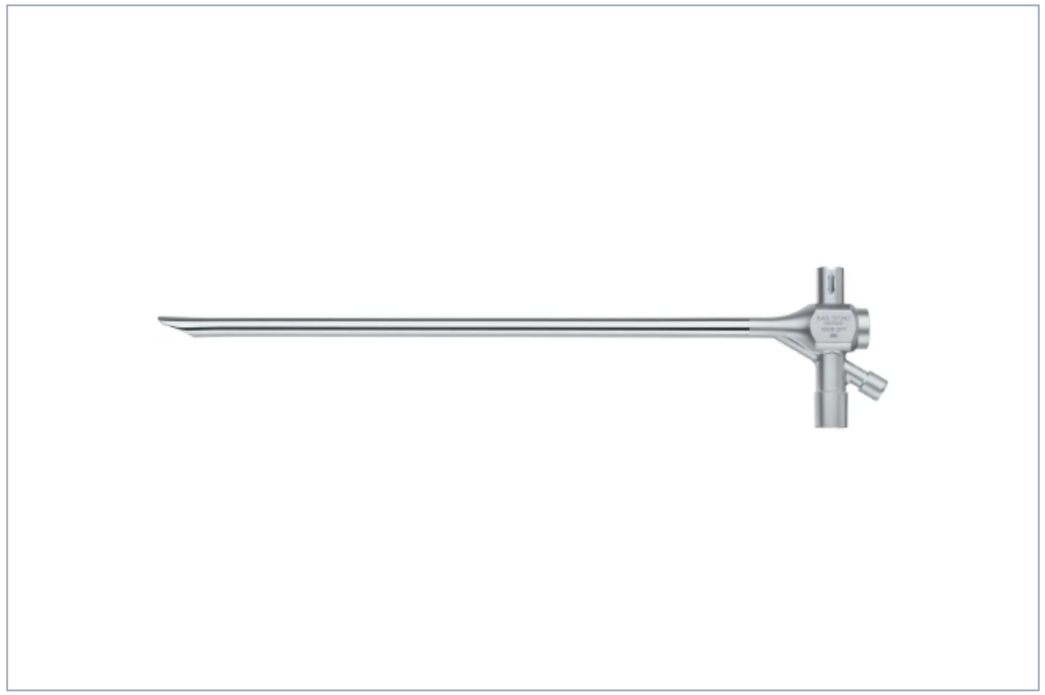

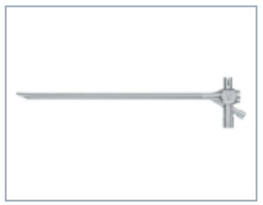

Item no: 10318DPT

Universal Tracheoscope, size 6.5, 33 cm

Quantity:

– 1 +

Add to My Quote List

Technical details | Documents & Films | Product group / field of application

Size	6.5
Sheath outer diameter	9.2 mm
Outer diameter at distal end	10.5 mm
Working length	33 cm

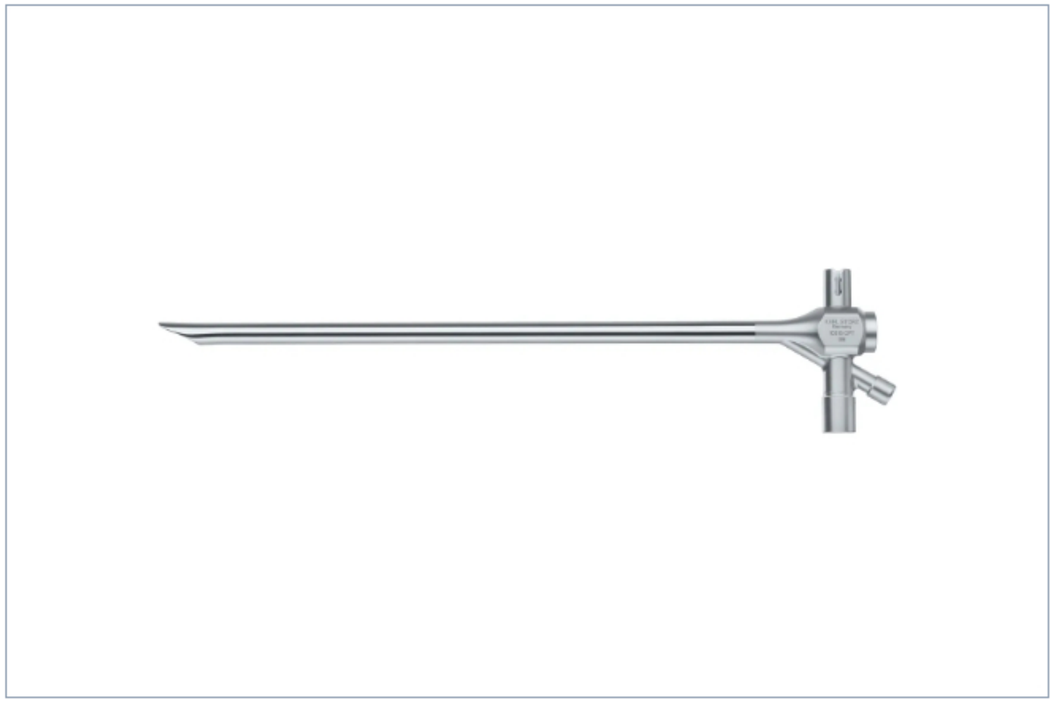

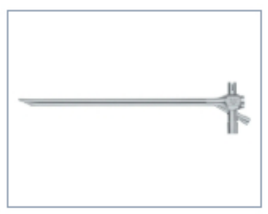

Item no: 10318CPT

Universal Tracheoscope, size 7.5, 33 cm

Quantity:

– 1 +

Add to My Quote List

Technical details | Documents & Films | Product group / field of application

Size	7.5
Sheath outer diameter	10.2 mm
Outer diameter at distal end	11.5 mm
Working length	33 cm

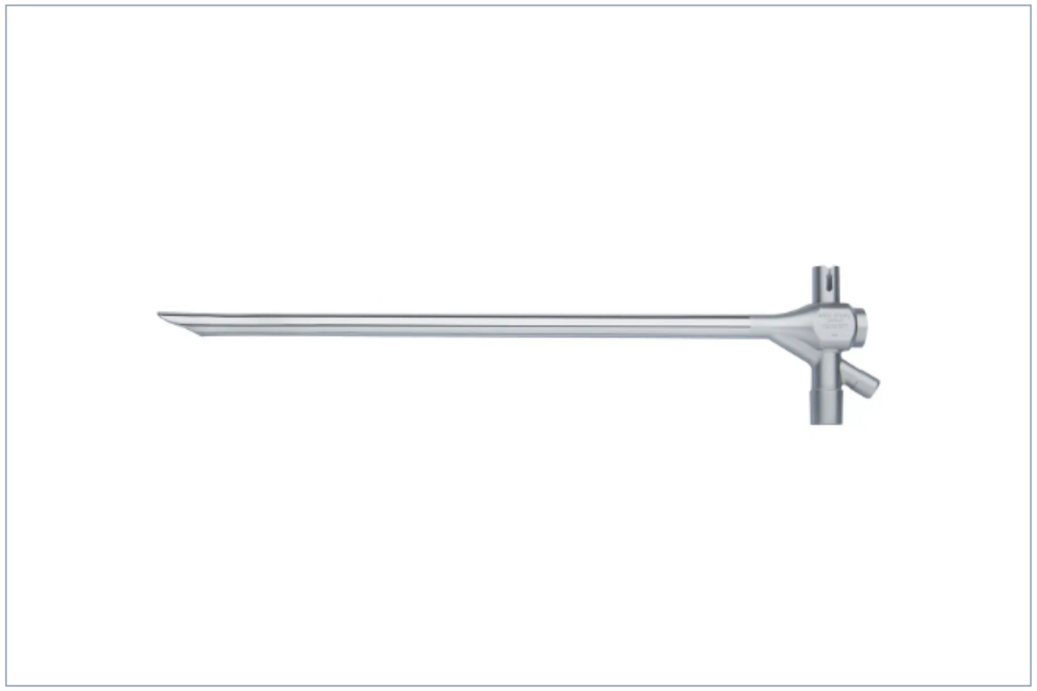

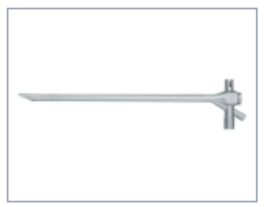

Item no: 10318BPT

Universal Tracheoscope, size 8.5, 33 cm

Quantity:

– 1 +

Add to My Quote List

Technical details | Documents & Films | Product group / field of application

Size	8.5
Sheath outer diameter	11.2 mm
Outer diameter at distal end	12.5 mm
Working length	33 cm

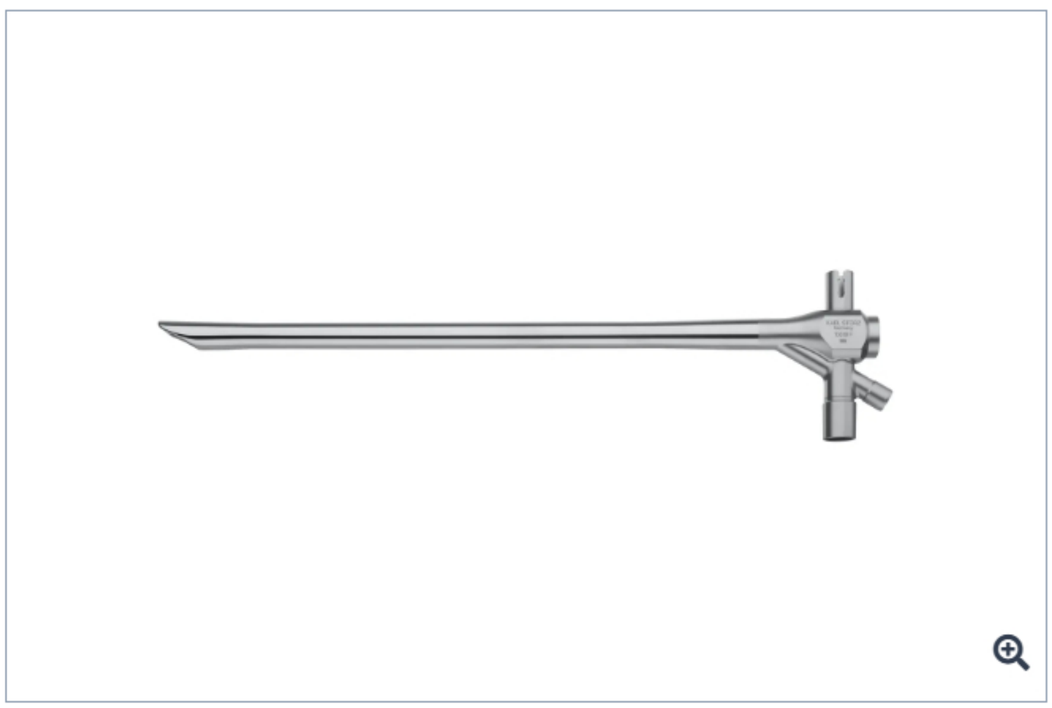

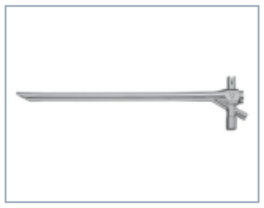

Item no: 10318F

Tracheoscope

Quantity:

− 1 +

Add to My Quote List

Technical details | Documents & Films | Product group / field of application

Size	12
Sheath outer diameter	12 mm
Outer diameter at distal end	14.8 mm
Working length	33 cm

Item no: 10318G

Tracheoscope, size 14 mm, 33 cm

Quantity:

– 1 +

Add to My Quote List

Technical details | Documents & Films | Product group / field of application

Size	14
Sheath outer diameter	14 mm
Outer diameter at distal end	15 mm
Working length	33 cm

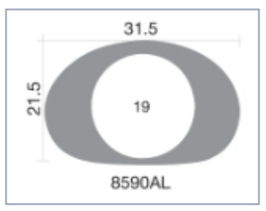

Item no: 8590AL

Oper. Laryngoscope, extra large

Quantity:

– 1 +

Add to My Quote List

Product details

- KLEINSASSER laryngoscopes in the familiar conical shape
- Modified by RUDERT with lateral outer channels for suction tube to remove vapor and/or for fiber optic light carriers, thus no obstruction of view
- Full use of the entire laryngoscope lumen possible

Technical details | Documents & Films | Product group / field of application

Inner diameter proximal (w x h)	31.5 x 21.5 mm
Inner diameter distal (w x h)	19 mm
Field of application	Adults
Author	KLEINSASSER
Model	Extra large
Total length	17 cm

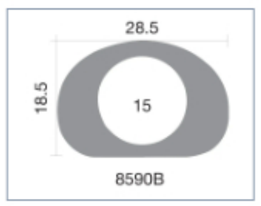

Item no: 8590B

Operating Laryngoscope, large

Quantity:

– 1 +

Add to My Quote List

Technical details | Documents & Films | Product group / field of application

Inner diameter proximal (w x h)	28.5 x 18.5 mm
Inner diameter distal (w x h)	15 mm
Field of application	Adults
Author	KLEINSASSER
Model	Large
Total length	17 cm

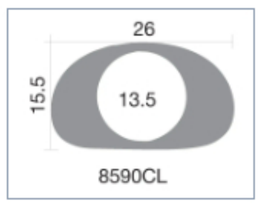

Item no: 8590CL

Operating Laryngoscope, medium

Quantity:

– 1 +

Add to My Quote List

Product details

- KLEINSASSER laryngoscopes in the familiar conical shape
- Modified by RUDERT with lateral outer channels for suction tube to remove vapor and/or for fiber optic light carriers, thus no obstruction of view
- Full use of the entire laryngoscope lumen possible

Technical details | Documents & Films | Product group / field of application

Inner diameter proximal (w x h)	26 x 15.5 mm
Inner diameter distal (w x h)	13.5 mm
Field of application	Adults
Author	KLEINSASSER
Model	Medium
Total length	17 cm

Item no: 8590GF

Fiber Optic Light Carrier, 14 cm

Quantity:

– 1 +

Add to My Quote List

Product details

For distal illumination

Technical details | Documents & Films | Product group / field of application

Working length	14 cm
Illumination technology	Distal illumination

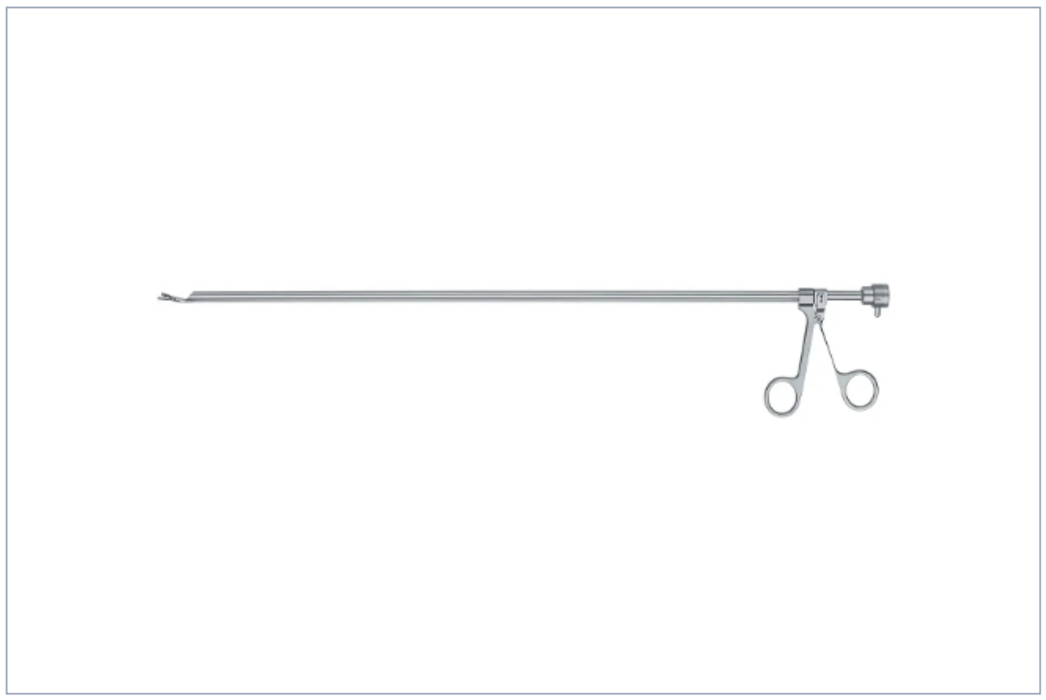

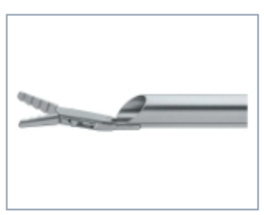

Item no: 10350HF

Optical Forceps, with alligator jaws

Quantity:

– 1 +

Add to My Quote List

Technical details | Documents & Films | Product group / field of application

Jaw shape	Alligator
Jaw surface	Serrated
Jaw mobility	Double action jaws
Force-limited handle	Yes
Working length	45 cm
Length	52 cm
For bronchoscope sizes	7,5 - 8,5 mm

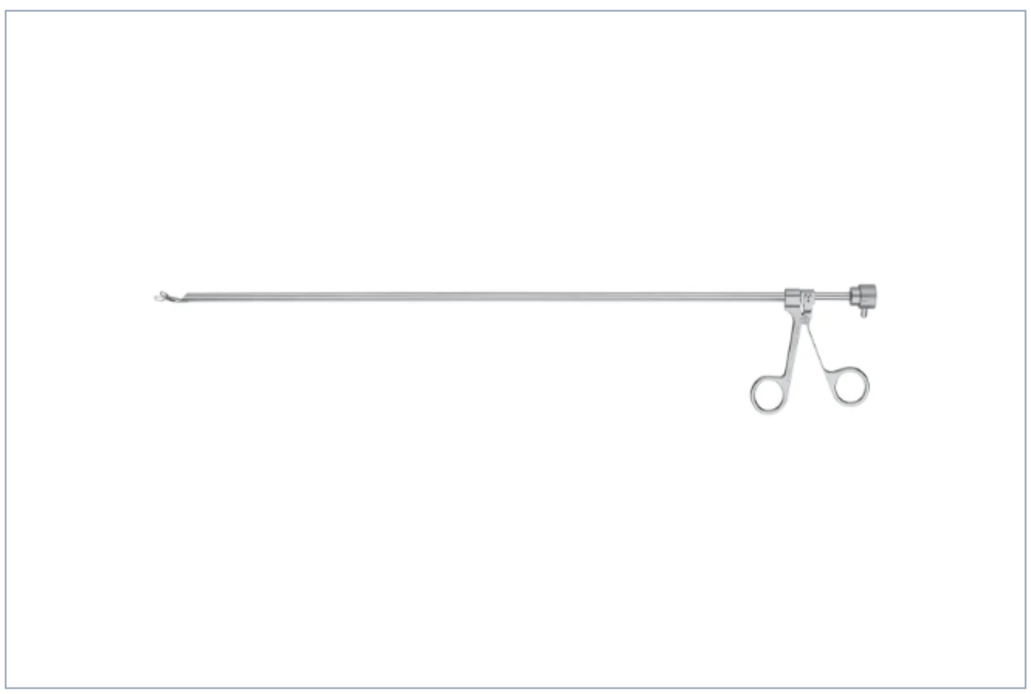

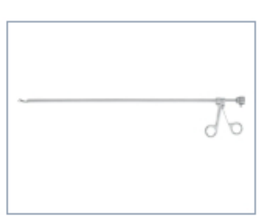

Item no: 10352KF

Optical Forceps, for peanuts

Quantity:

− 1 +

Add to My Quote List

Technical details | Documents & Films | Product group / field of application

Jaw shape	Bean jaws
Jaw surface	Blunt grooved
Jaw mobility	Double action jaws
Force-limited handle	Yes
Working length	46 cm
Length	52 cm
For bronchoscope sizes	6,5 - 8,5 mm

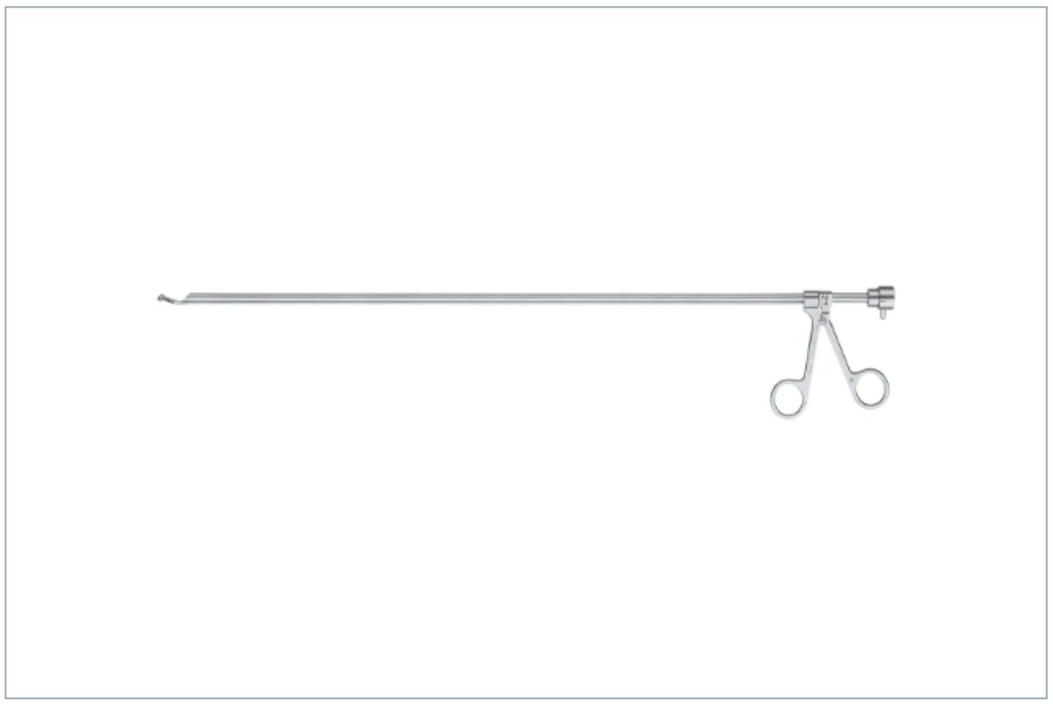

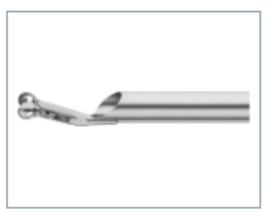

Item no: 10350L

Optical Forceps, for biopsy

Quantity:

– 1 +

Add to My Quote List

Technical details | Documents & Films | Product group / field of application

Jaw shape	Round
Jaw surface	Spoon-shaped
Jaw mobility	Double action jaws
Force-limited handle	No
Working length	45 cm
Length	52 cm
For bronchoscope sizes	7,5 - 8,5 mm

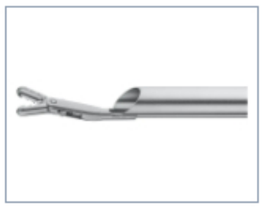

Item no: 10350U

Optical Forceps, universal

Quantity:

– 1 +

Add to My Quote List

Technical details | Documents & Films | Product group / field of application

Jaw shape	Universal
Jaw surface	Serrated
Jaw mobility	Double action jaws
Force-limited handle	No
Working length	46 cm
Length	52 cm
For bronchoscope sizes	7,5 - 8,5 mm

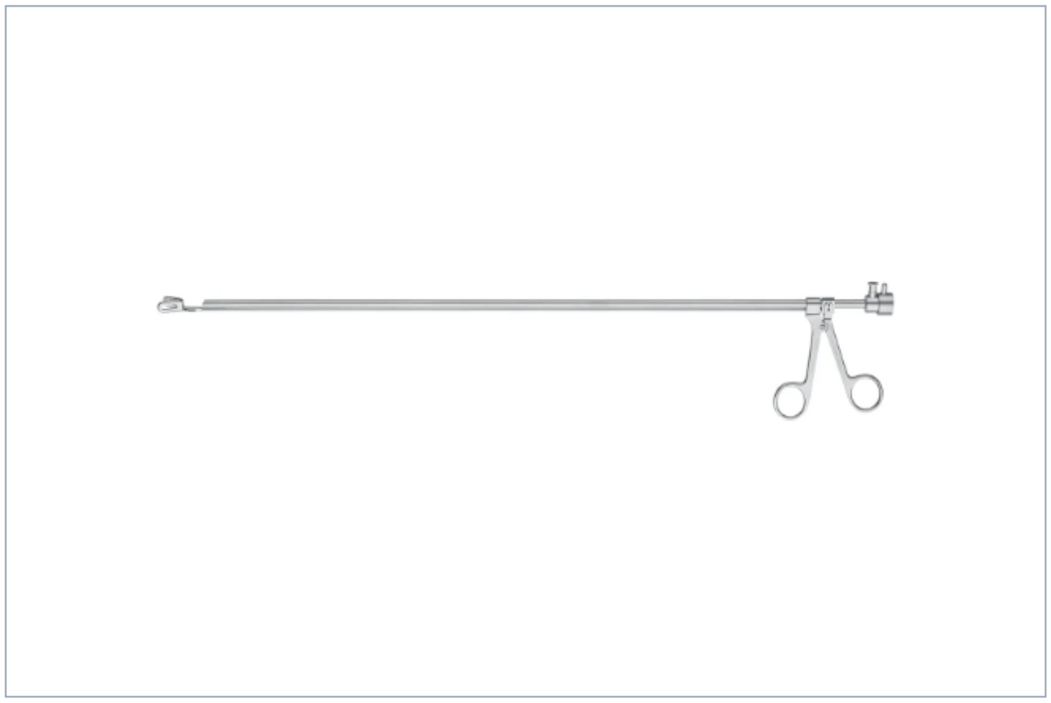

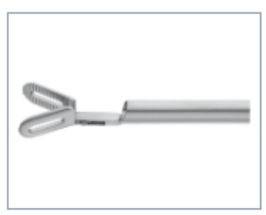

Item no: 10350F

Optical Forceps, large jaws, blunt

Quantity:

– 1 +

Add to My Quote List

Technical details | Documents & Films | Product group / field of application

Jaw shape	Fenestrated
Jaw surface	Blunt grooved
Jaw mobility	Double action jaws
Force-limited handle	No
Working length	47 cm
Length	53 cm
For bronchoscope sizes	7,5 - 8,5 mm

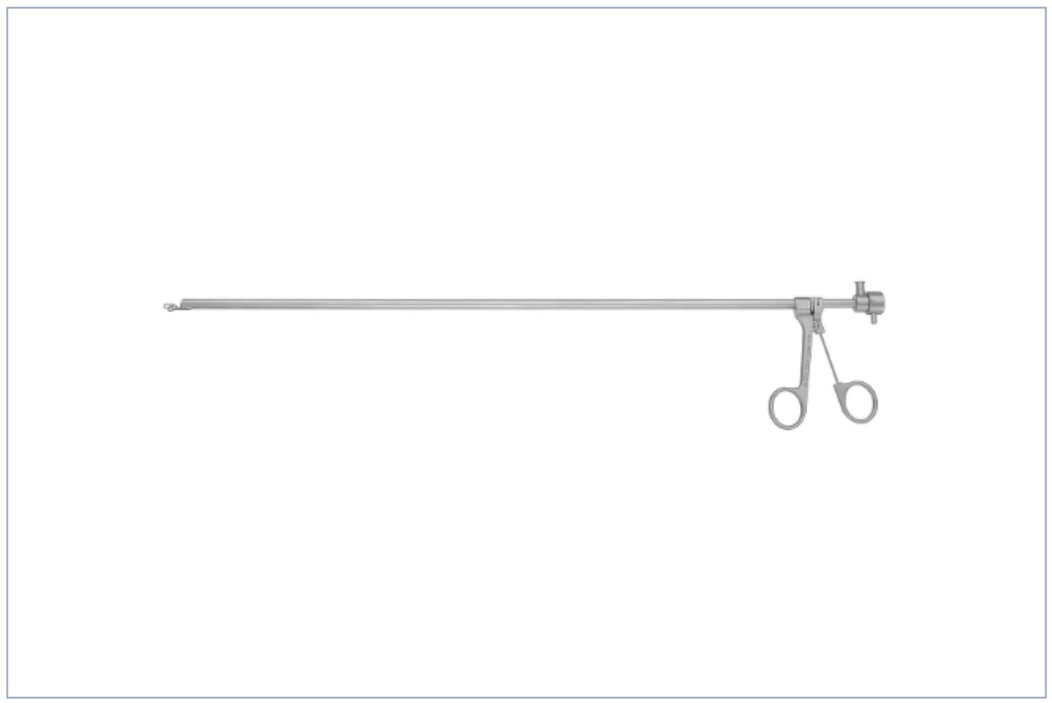

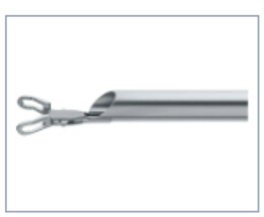

Item no: 10350KF

Optical Forceps, for peanuts

Quantity:

– 1 +

Add to My Quote List

Technical details | Documents & Films | Product group / field of application

Jaw shape	Bean jaws
Jaw surface	Blunt grooved
Jaw mobility	Double action jaws
Force-limited handle	Yes
Working length	45 cm
Length	51 cm
For bronchoscope sizes	7,5 - 8,5 mm

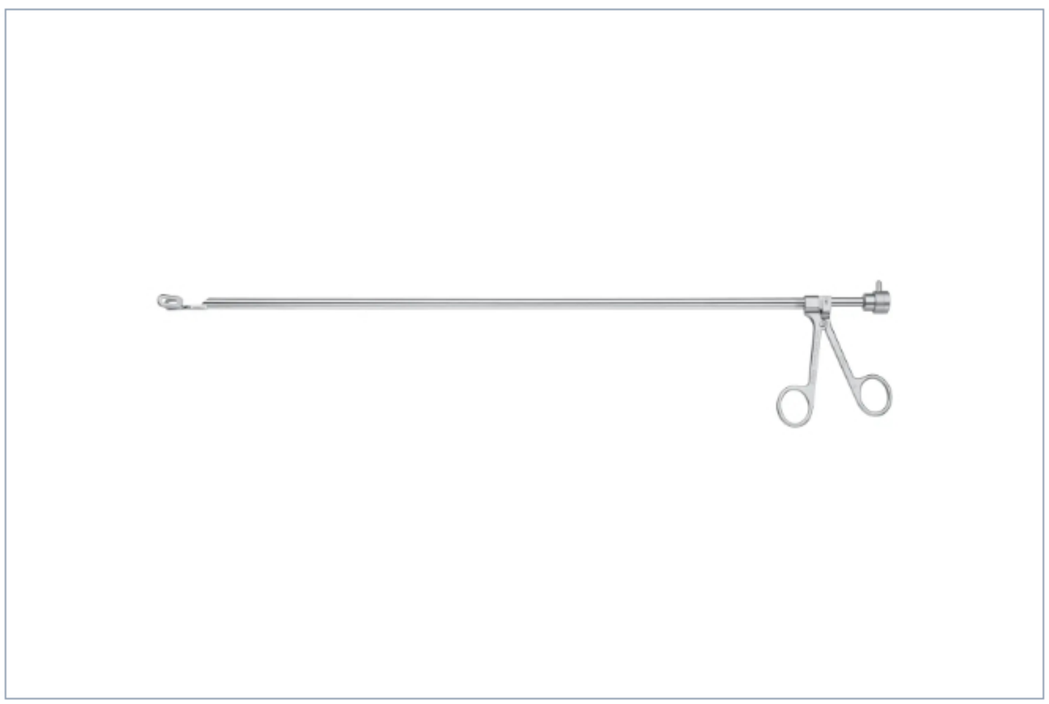

Item no: 10350M

Optical Forceps, large jaws, sharp

Quantity:

– 1 +

Add to My Quote List

Technical details | Documents & Films | Product group / field of application

Jaw shape	Oval
Jaw surface	Spoon-shaped
Jaw mobility	Double action jaws
Force-limited handle	No
Working length	47 cm
Length	53 cm
For bronchoscope sizes	7,5 - 8,5 mm

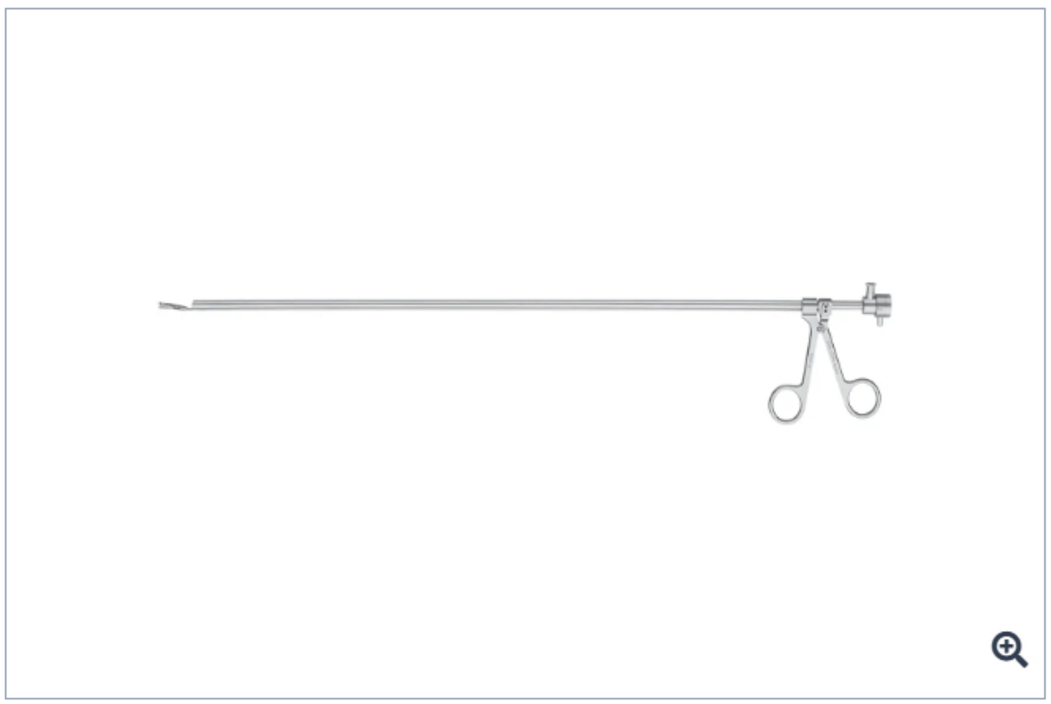

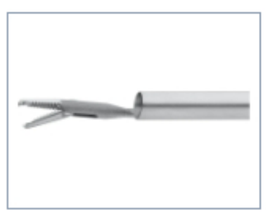

Item no: 10350ST

Optical Forceps, for stents

Quantity:

– 1 +

Add to My Quote List

Technical details | Documents & Films | Product group / field of application

Jaw shape	Pointed
Jaw surface	Serrated
Jaw mobility	Double action jaws
Force-limited handle	No
Working length	46 cm
Length	52 cm
For bronchoscope sizes	11-14 mm

Forceps and Scissors for Bronchoscopy

Single action jaws

10366 U

Sheath diameter 2.5 mm, working length 55 cm

10366 H	**Forceps,** with alligator jaws, width of jaws 3.5 mm, with LUER-Lock irrigation connector for cleaning
10366 K	**Forceps,** bean jaws, blunt grooved, width of jaws 3.5 mm, with LUER-Lock irrigation connector for cleaning
10366 L	**Forceps,** round, spoon-shaped, width of jaws 3.5 mm, with LUER-Lock irrigation connector for cleaning
10366 U	**Forceps,** universal, serrated, width of jaws 3.5 mm, with LUER-Lock irrigation connector for cleaning
10366 S	**Scissors,** straight, width of jaws 5 mm, with LUER-Lock irrigation connector for cleaning

Sheath diameter 2.5 mm, working length 35 cm

10367 H	**Forceps,** with alligator jaws, serrated, width of jaws 3.5 mm, with LUER-Lock irrigation connector for cleaning
10367 K	**Forceps,** bean jaws, blunt grooved, width of jaws 3.5 mm, with LUER-Lock irrigation connector for cleaning
10367 L	**Forceps,** round, spoon-shaped, width of jaws 3.5 mm, with LUER-Lock irrigation connector for cleaning

10366 H
10367 H

10366 K
10367 K

10366 L
10367 L

10366 U

10366 S

5-043

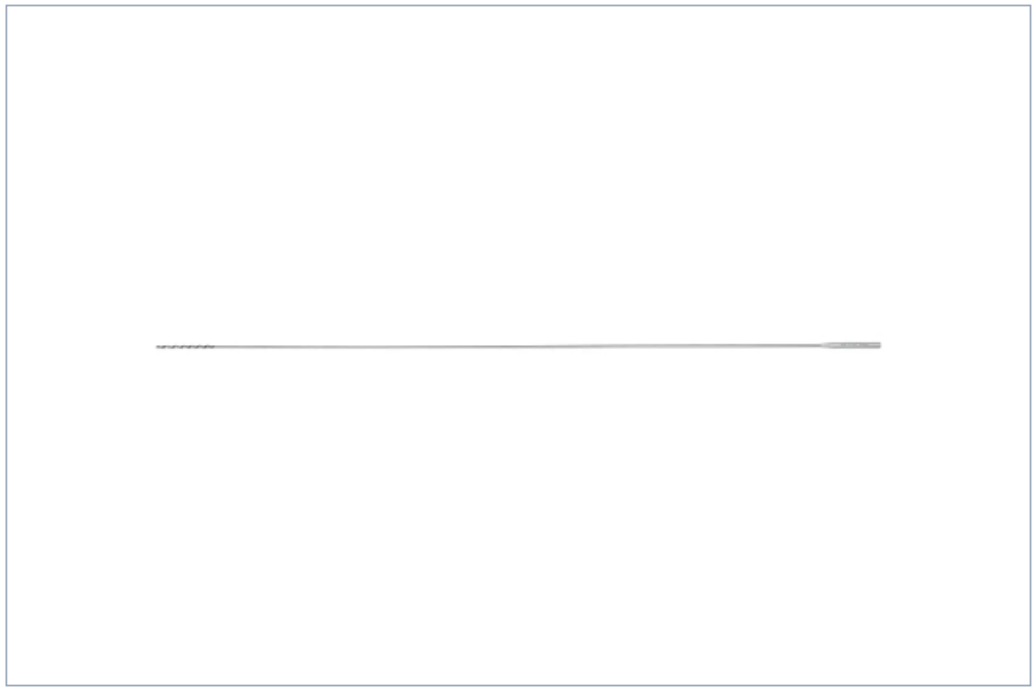

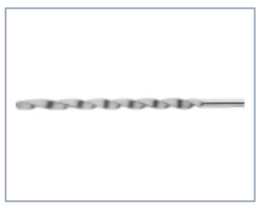

Item no: 10384A

Cotton Carrier, 50 cm

Quantity:

– 1 +

Add to My Quote List

Technical details | Documents & Films | Product group / field of application

Outer diameter	2 mm
Working length	50 cm

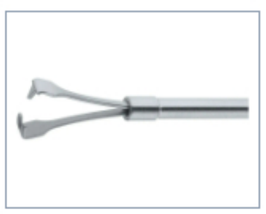

Item no: 10387A

Sponge Holder, with spring handle, 50 cm

Quantity:

– 1 +

Add to My Quote List

Technical details | Documents & Films | Product group / field of application

Outer diameter	2.5 mm
Working length	50 cm
Handle type	Spring-action handle

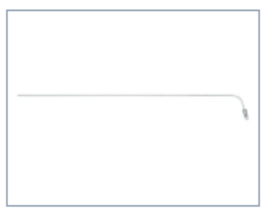

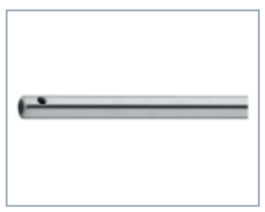

Item no: 10380D

Suction Tube, 2.5 mm, 50 cm

Quantity:

– 1 +

Add to My Quote List

Technical details | Documents & Films | Product group / field of application

Working length	50 cm
Outer diameter	2.5 mm
Distal tip	Straight
Distal end shape	Without rubber tip
Number of poles	Without HF

Item no: 10380A

Suction Tube, working length 50 cm

Quantity:

– 1 +

Add to My Quote List

Technical details | Documents & Films | Product group / field of application

Working length	50 cm
Outer diameter	4 mm
Distal tip	Straight
Distal end shape	Without rubber tip
Number of poles	Without HF

Item no: 10315N

Rubber Telescope Guide

Quantity:

– 1 +

Add to My Quote List

Technical details | Documents & Films | Product group / field of application

Sealing cap type	With rubber seal
Connection on bronchoscope	Central working channel
Application	For rigid bronchoscopes

Item no: 10315M

Glass Window Plug

Quantity:

– 1 +

Add to My Quote List

Technical details | Documents & Films | Product group / field of application

Sealing cap type	With window
Connection on bronchoscope	Central working channel
Application	For rigid bronchoscopes

Item no: 10924D

Adaptor, for respirator

Quantity:

– 1 +

Add to My Quote List

Technical details | Documents & Films | Product group / field of application

Connection on bronchoscope	Ventilation channel
Application	For connecting rigid bronchoscopes to a respirator

Item no: 10318S

Instrument Guide, for suction catheter

Quantity:

– 1 +

Add to My Quote List

Technical details | Documents & Films | Product group / field of application

Connection on bronchoscope	Jet channel
Application	For rigid bronchoscopes

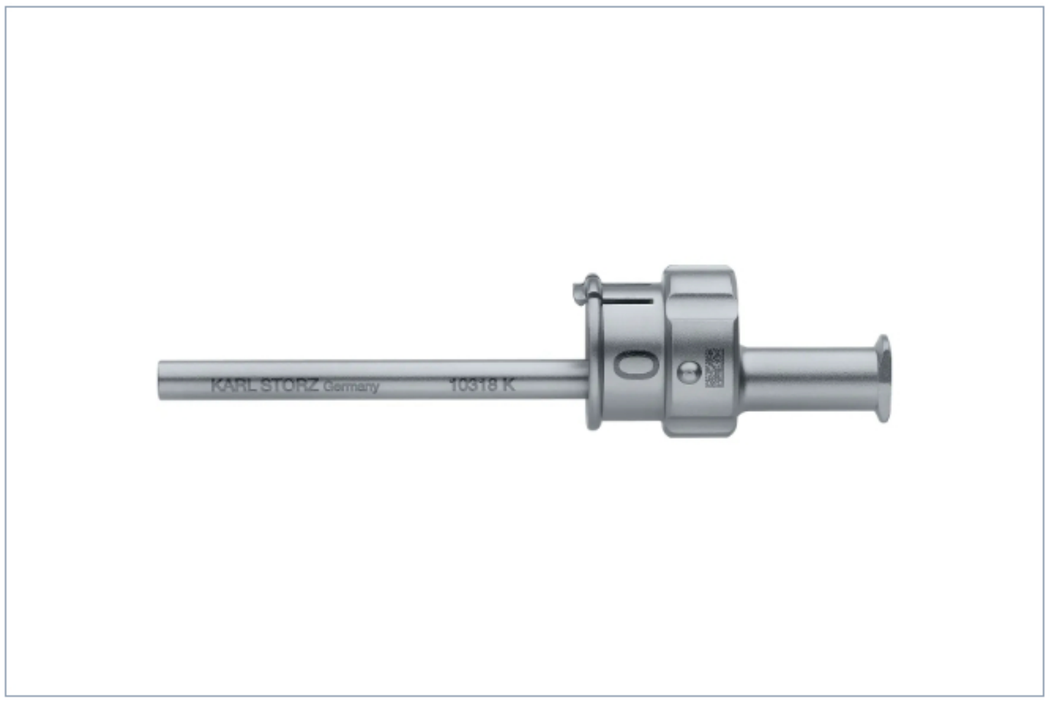

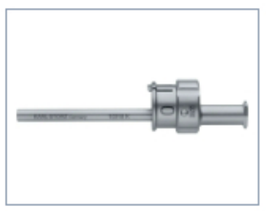

Item no: 10318K

Injection Cannula, outer diameter 3.5 mm

Quantity:

– 1 +

Add to My Quote List

Technical details | Documents & Films | Product group / field of application

Connection on bronchoscope	Jet channel
Application	For rigid bronchoscopes, for positive pressure assisted ventilation
LUER-Lock	Yes
Outer diameter	3.5 mm

KARL STORZ — ENDOSKOPE

Reduction Sleeves/Extractors

30140 DB

Instrument Diameter	Outer Diameter of Trocar Cannula – Color Code					
	6 mm black	11 mm green	12 mm white	13 mm black	15 mm	22 mm
3 mm	30140 KA	30140 DA	–	–	–	–
5 mm	–	30140 DB	30140 EB	30140 HB	30140 FB	30140 GB
8 mm	–	30140 DD	–	–	–	–
10 mm	–	–	30140 EE	30140 HE	30140 FE	30140 GE

Reducers, for use with trocars with automatic valves and TERNAMIAN **EndoTIP cannulas with automatic valves**

30141 AA

30141 DB

30141 AA	**Reducer,** 6/3 mm
30141 DB	**Same,** 11/5 mm
30141 HB	**Same,** 13/5 mm and 13.5/5 mm
30141 HE	**Same,** 13/10 mm

Double Reducer

30142 HB

30142 HB	**Double Reducer,** 13/10 mm, 13.5/10 mm, 13/5 mm and 13.5/5 mm

Reducers, for use with trocars with silicone leaflet valves and TERNAMIAN **EndoTIP cannulas with silicone leaflet valves**

30160 RE

30160 RE	**Reducer,** 6/3 mm
30103 RE	**Same,** 11/5 mm

2-98s

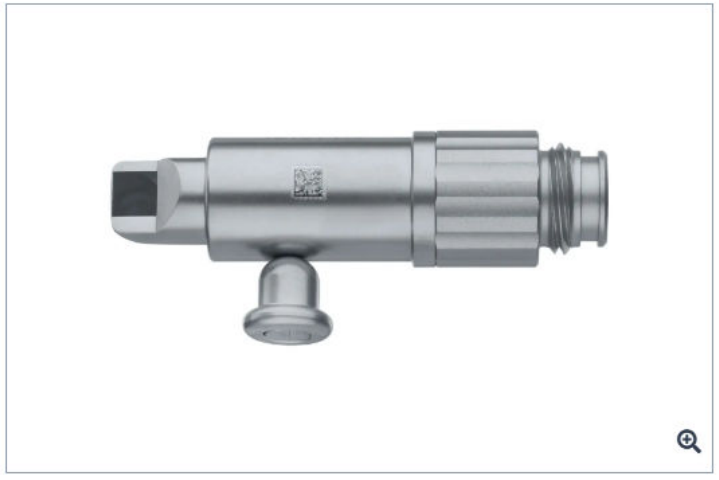

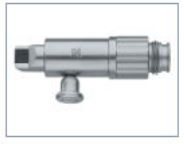

Item no: 10101FA

Prismatic Light Deflector

Quantity:

− 1 +

Add to My Quote List

Product details

For proximal illumination

Technical details | Documents & Films | Product group / field of application

Connection on bronchoscope	Illumination channel
Application	For rigid bronchoscopes