Digitally signed by Bolgarin Mihail
Date: 2026.02.18 15:46:49 EET
Reason: MoldSign Signature
Location: Moldova
MOLDOVA EUROPEANĂ

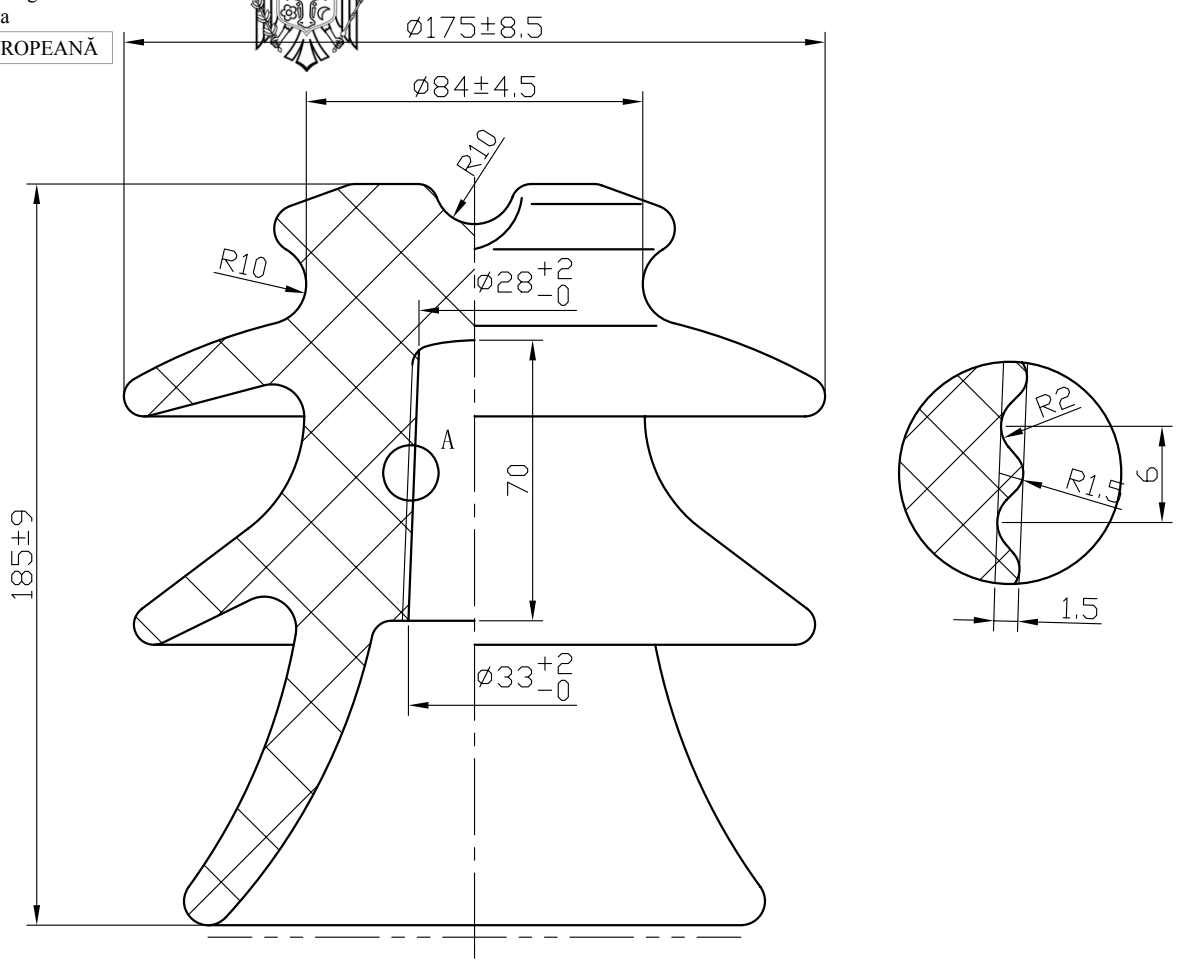

TECHNICAL DATA

Type	ST-20/J(R)
Standard Applied	IEC 383-1
Main dimensions	
D:	175mm
H:	185mm
Rated voltage	20kV
Impulse withstand voltage	135kV
Power frrequency withstand voltage: wet	65kV
dry	85kV
Puncture voltage	180kV
Failing load	13kN
Creepage distance	400mm
Color	Brown

DESIGN	陈其松	DRAWING	3CY2.805.173	ST-20/J(R)
CHECK		REVISION	Jun.17,2014	
ISSUED	钱建保			