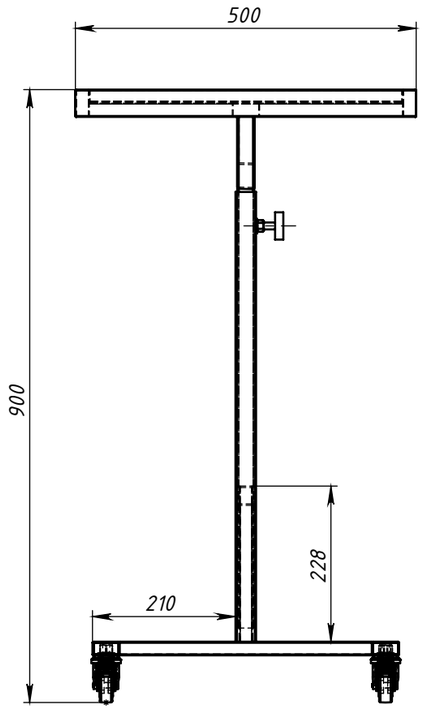

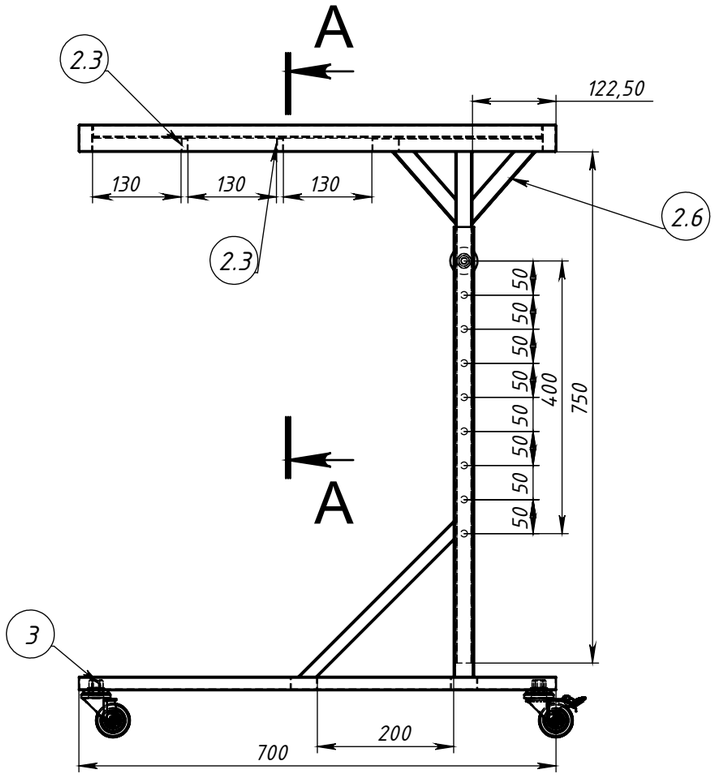

A-A (1 : 5)

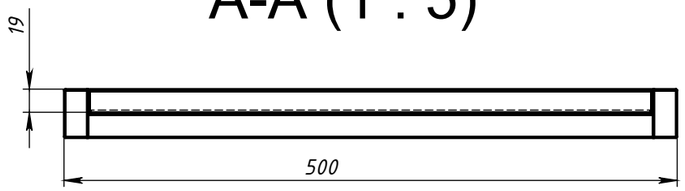

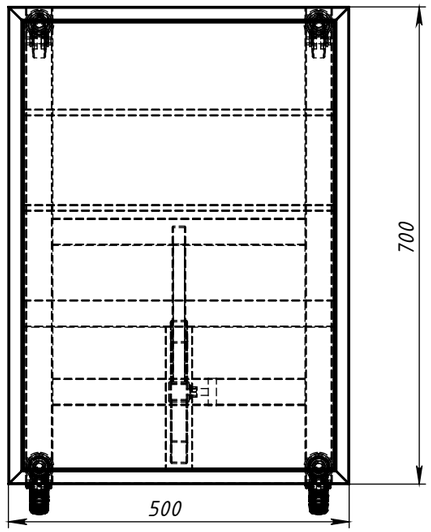

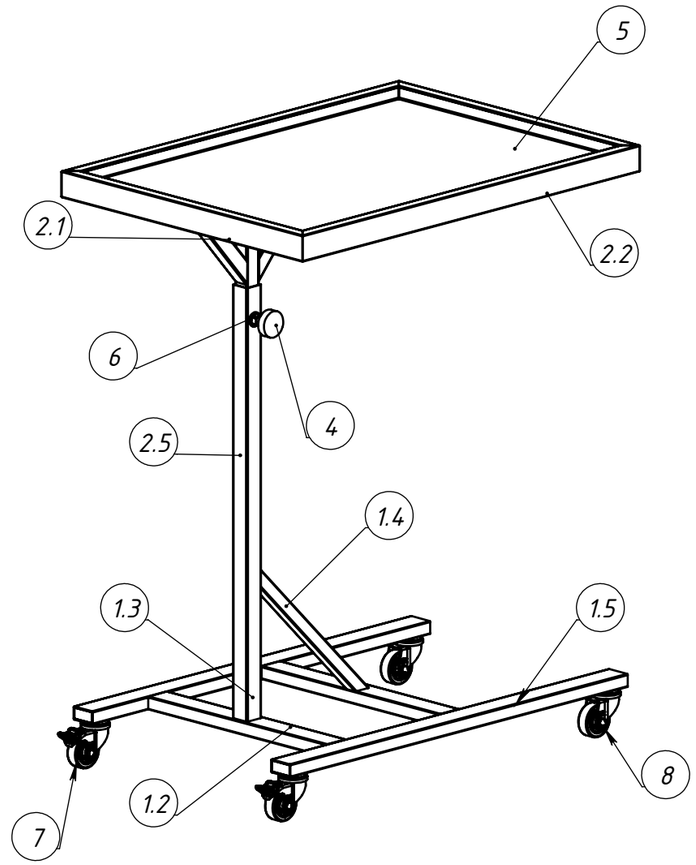

ITEM NO.	PART NUMBER	DESCRIPTION	ДЛИНА	QTY.
1	Carcas N2 baza			1
1.1				4
1.2		Profil 40 X 20 X 1,5	370	2
1.3		Profil 30 X 30 X 2	660	1
1.4		Profil 20 X 20 X 1,5	322.84	1
1.5		Profil 40 X 20 X 1,5	700	2
2	Carcas N1 500x350			1
2.1		Teava profilata 40 X 20 X 1,2	500	2
2.2		Profil 40 X 20 X 1,2	700	2
2.3		Profil 20 X 10 X 1,2	460	2
2.4		Profil 40 X 20 X 1,2	210	1
2.5		Profil 25 X 25 X 1,5	750	1
2.6		Profil 25 X 25 X 1,5	140.77	1
2.7		Profil 25 X 25 X 1,5	140.77	1
2.8		Profil 40 X 20 X 1,2	460	1
3	Piulita M12x1,25			4
4	Piulita de fixare			1
5	Blat 660x460	S1		1
6	Piulita M10x1,25			1
7	Roata D50 cu frina			2
8	Roata D50			2

№	
Client	_
Inginer	Pleșivțev Artiom
Termen ex.	__.__.2024

Masa MAYO 700x500x900-1300H

Digitally signed by Cobzari-Țurcan Rodica
Date: 2025.04.09 16:03:04 EEST
Reason: MoldSign Signature
Location: Moldova
MOLDOVA EUROPEANĂ

METAL EXPERT TECHNOLOGY