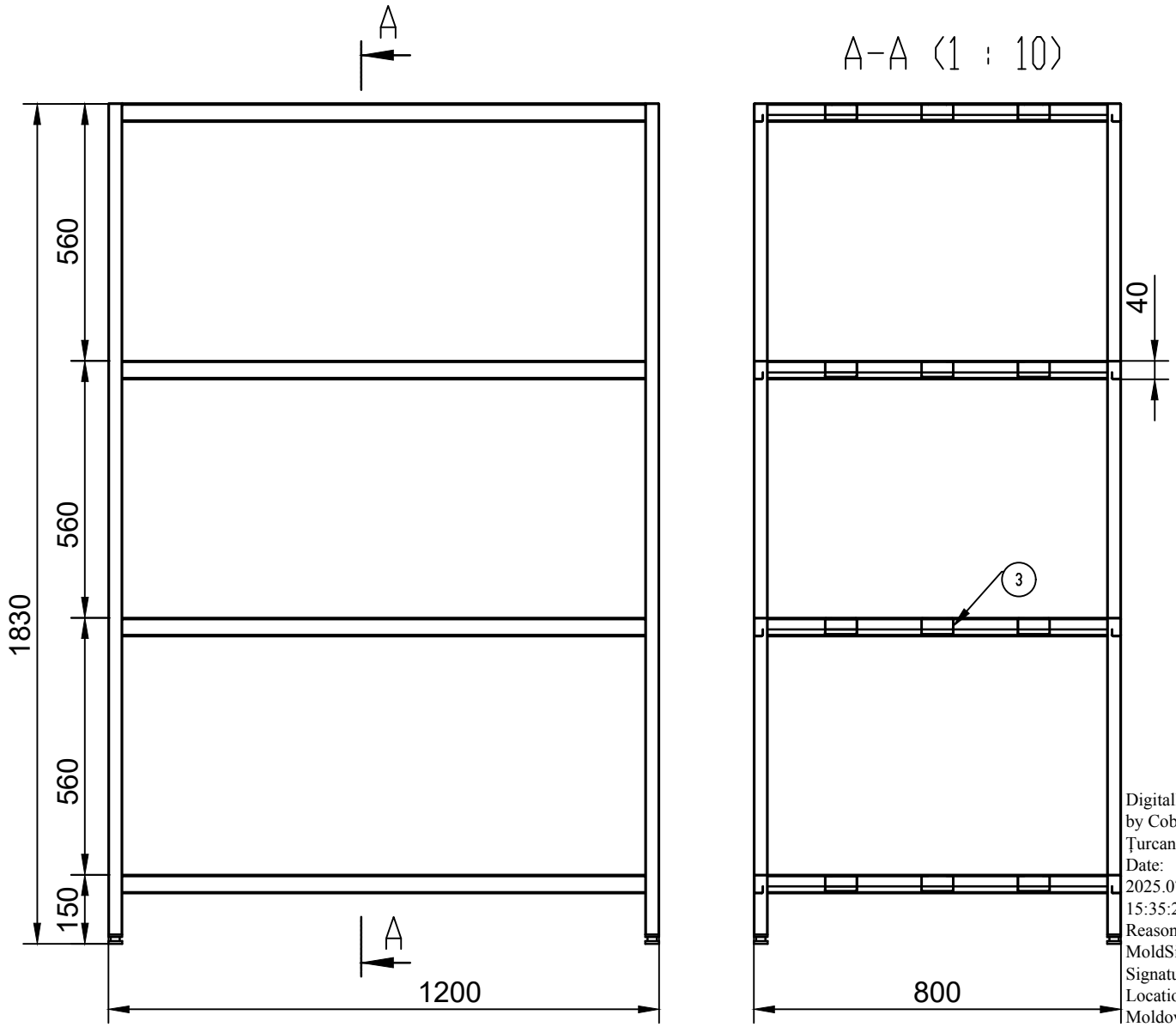

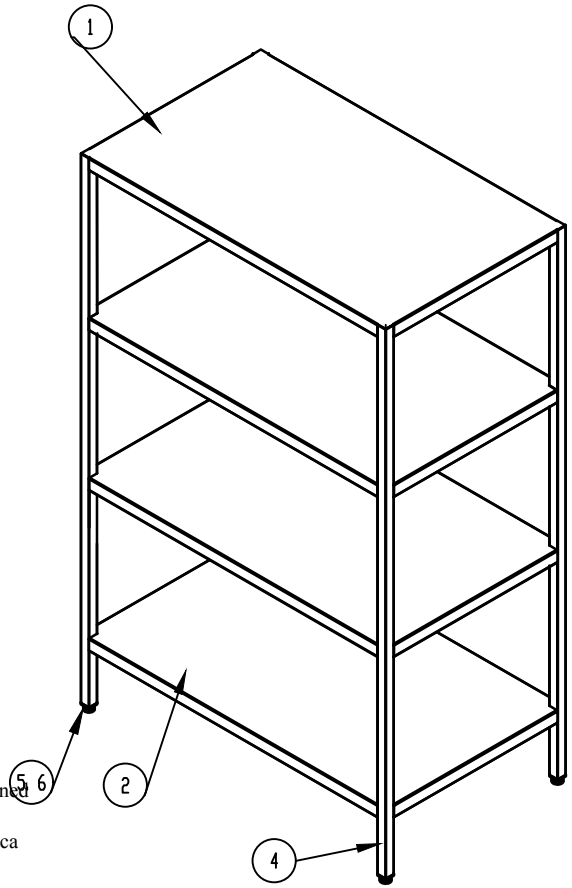

Digitally signed by Cobzari-Țurcan Rodica
Date: 2025.07.30 15:35:22 EEST
Reason: MoldSign Signature
Location: Moldova

MOLDOVA EUROPEANĂ

ITEM NO.	PART NUMBER	DESCRIPTION	LENGHT	QTY.
1	Polita 1200x800 N1	Tabla 1.0		1
2	Polita 1200x800 N2	Tabla 1.0		3
3	Ranfort 1160	Tabla 0.8		12
4	Picior	Teava profilata 30x30x1,2	1800	4
5	Suport picior			4
6	Picior reglabil			4

Raft 1200x800x1830 cu 4 polite