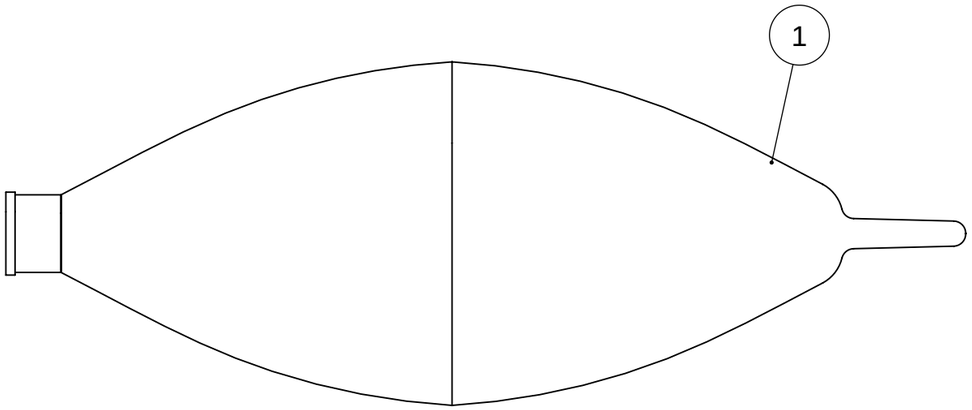

UNIT NO.	PART NUMBER	DESCRIPTION	QUANTITY
1	150.07.040	2 LT NEOPRENE SINGLE FOLDED BREATHING BAG WITH STICKER(RIGID PP CONNECTOR)	1
2	150.11.036	ELBOW CONNECTOR LUER CAP	1
3	151.03.001.01	22 MM STRAIGHT CONNECTOR	3
4	151.03.110	22-22MM STRAIGHT CONNECTOR	1
5	151.03.150	22 MM PARALLEL Y CONNECTOR PP	1
6	151.03.178.01	ELBOW CONNECTOR WITH CO2 PORT PP	1
7	151.03.264	Y CONNECTOR CAP (NEW)	2
8	151.05.01.062	22 MM CORRUGATED TUBING PE 180 CM CUT	2
9	151.05.01.074	22 MM CORRUGATED TUBING PE 150 CM CUT	1

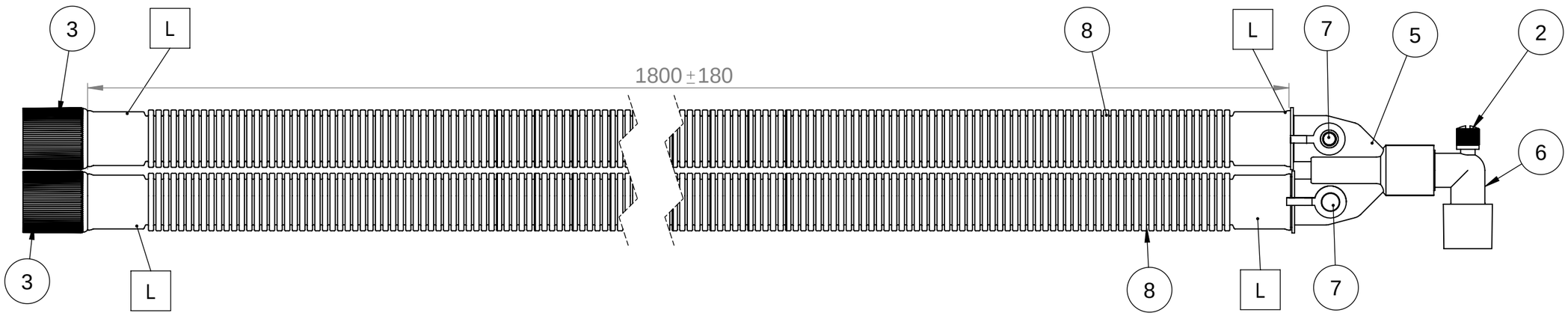

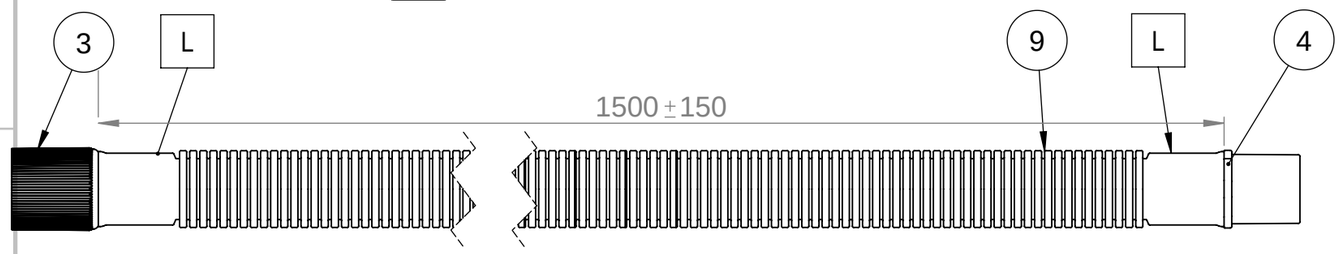

ANSI
X ISO

All dimensions are in millimeters

Digitally signed by Bolea Petru
Date: 2023.09.17 16:01:06 EEST
Reason: MoldSign Signature
Location: Moldova

[h/¢L¢9 офнн ¦± LOCTITE 3922 UV	UV
SOLVENT SOLVENT	S
%75 SOLVENT + %25 ALKOL %75 SOLVENT + %25 ALCOHOL	S+A
ALKOL ALCOHOL	A
LOCTITE LOCTITE	L
SKLKKON SKLKKON	Si

5l]ÑYl·y˙]2Řdz\ \\ŠØłÎè2y˙y2 ØŠ \\ŠØłÎè2y˙ú·\\ÚKł
52ÖdzYŠyÚ ÖzŘŠ\ \\ŠØłáł2y˙y2 l·yŘ \\ŠØłáł2y˙Řl·úŠ
twhлс¢ло¢лллл¢Смл w9±¢лл óмс¢ло¢нлнмú

!мπнмклстс úl·fŠLJ y2]l·LJăl·Y℗yŘl· ∃ÑyÖŠtfŠyŘł¢				01	Samet ¥zt¿rk / Ekrem Ama-
A-ăklamalar / Notes				Revizyon no / Revision no	Deî iktirme yapan / Changed By / Onaylayan / Approved
Genel Toleranslar / Gen. Tolerances	¥l-ek / Scale	1:2	Ad / Name	Kınza / Signature	Tarih / Date
N/A	Hazălayan / Prepared		Samet ¥zt¿rk		9.04.2021
	Onaylayan / Approved		Ekrem Ama-		9.04.2021
	Resim no / Dwr.no		TD		
	Par-a Adē / Part Name		.w9!¢lLbD /Lw/¦L¢ ó{¢9wL[9 9hú		
	Par-a Kodu / Part Code		AL-11019-060.V002		

Meditera®

Yayēn no / Release no	¢5! [пммлмфплслł±ллнψм
Yayēn tarihi / Release date	18.01.2018
Sheet / Sayfa	1
Total/Tamamē	1
S. Boyutu / Drw.Size	A3