Digitally signed by Bolocan Roman
Date: 2022.06.28 18:55:54 EEST
Reason: MoldSign Signature
Location: Moldova

Evolutis

CREATEUR FABRICANT

Product Sheet
Stemsys®
Fiche Produit

REVISION *Distal locking* / **Verrouillage distal**
Lengths / Longueurs 210 *to*/à 240, 260(L) &/et 320mm(XL)
Collared / Avec collerette

REVISION *Slotted* / **Fendue**
Lengths / Longueurs 200 *to*/à 240mm
Collared and collarless / Avec ou sans colerette

Primary Standard
1ère intention standard
Collared or collarless / Avec ou sans collerette
HAP : *Lengths* / Longueurs 110 *to*/à 190mm
Porous Ti + HAP : *Lengths* / Longueurs 110 *to*/à 170mm

Primary Lateralised
1ère intention Latéralisée
Collared or collarless / Avec ou sans collerette
HAP : *Lengths* / Longueurs 130 *to*/à 190mm
Porous Ti + HAP: *Lengths* / Longueurs 120 *to*/à 170mm

Primary cemented
1ère intention à cimenter
135° *or*/ou 128°
Lengths / Longueurs 120 *to*/à 160mm (155mm lat.)
Collarless / Sans collerette

Neck fracture gritblasted
Fracture du col corindonnée
Lengths / Longueurs 115 *to*/à 190mm
Collared / Avec collerette

Femoral implants for THA and THR indications
Implants fémoraux pour indications de PTH et PTHR

Evolutis
MOTION INSIDE

www.evolutisfrance.com

REFERENCES

STEMSYS *Cementless* Sans ciment

	Cementless dual coating Porous Ti + HA Double revêtement Ti + HA				*Cementless HA coating* Hydroxyapatite			
Lot 3, Lot 12	Standard	*Std Collared* Std à Coll.	*Lateralized* Latéralisé	*Lat Collared* Lat à coll.	Standard	*Std Collared* Std à Coll.	*Lateralized* Latéralisé	*Lat Collared* Lat à coll.
size /taille 7	* H45 007				* H73 007			
size /taille 8	* H45 008	* H45 C008			* H73 008	* H73 C008	Lot 1	
size /taille 9	H45 009	H45 C009	H45 L009	H45 LC009	H73 009	H73 C009	H73 L009	H73 LC009
size /taille 10	H45 010	H45 C010	H45 L010	H45 LC010	H73 010	H73 C010	H73 L010	H73 LC010
size /taille 11	H45 011	H45 C011	H45 L011	H45 LC011	H73 011	H73 C011	H73 L011	H73 LC011
size /taille 12	H45 012	H45 C012	H45 L012	H45 LC012	H73 012	H73 C012	H73 L012	H73 LC012
size /taille 13	H45 013	H45 C013	H45 L013	H45 LC013	H73 013	H73 C013	H73 L013	H73 LC013
size /taille 14	H45 014	H45 C014	H45 L014	H45 LC014	H73 014	H73 C014	H73 L014	H73 LC014
size /taille 15	H45 015	H45 C015	H45 L015	H45 LC015	H73 015	H73 C015	H73 L015	H73 LC015
size /taille 16	H45 016	H45 C016	H45 L016	H45 LC016	H73 016	H73 C016	H73 L016	H73 LC016
size /taille 18	H45 018	H45 C018	H45 L018	H45 LC018	H73 018	H73 C018	H73 L018	H73 LC018
size /taille 20	H45 020		H45 L020	H45 LC020	H73 020	H73 C020	H73 L020	H73 LC020

Fracture

Gritblasted Corindonné	
Std Collared Std à Coll.	
LOT 1	
size/taille 8	****H73 TC008
size/taille 9	****H73 TC009
size/taille 10	****H73 TC010
size/taille 11	****H73 TC011
size/taille 12	****H73 TC012
size/taille 13	****H73 TC013
size/taille 14	****H73 TC014
size/taille 15	****H73 TC015
size/taille 16	****H73 TC016
size/taille 18	****H73 TC018
size/taille 20	****H73 TC020

Cemented A cimenter

	Shiny-Polished Poli-Brillant	
	Std.	Lat.
size/taille 9	H45 S009	** H45 SL009
size/taille 10	H45 S010	H45 SL010
size/taille 11	H45 S011	H45 SL011
size/taille 12	H45 S012	H45 SL012
size/taille 13	H45 S013	H45 SL013
size/taille 14	H45 S014	H45 SL014
size/taille 15	H45 S015	H45 SL015
size/taille 16	H45 S016	H45 SL016
size/taille 18	H45 S018	

STEMSYS Revision

	Split Collarless Fendue sans Collerette	*Split Collared* Fendue à Collerette	*Distal Lock.* A verrouill. distal	L *Distal Lock.* A verrouill.	XL *Distal Lock.* A verrouill.
size/taille 10	H45 R010	H45 RC010			
size/taille 12	H45 R012	H45 RC012	H45 R112	H45 R112L	H45 R112XL
size/taille 14	H45 R014	H45 RC014	H45 R114		
size/taille 16	H45 R016	H45 RC016	H45 R116		
size/taille 18	H45 R018	H45 RC018	H45 R118		
size/taille 20	H45 R020	H45 RC020	H45 R120		

Locking screw Vis de verrouillage	
ø6/4.5 lg.20	H15 SC6020
ø6/4.5 lg.25	H15 SC6025
ø6/4.5 lg.30	H15 SC6030
ø6/4.5 lg.35	H15 SC6035
ø6/4.5 lg.40	H15 SC6040
Lot 3, Lot 12	

Femoral Heads Têtes Fémorales

Description	*Size* Taille	Cat. N°	Description	*Size* Taille	Cat. N°
Co-Cr / Chrome-Cobalt	Ø28 -7mm	H10 1279	*Composite* Ceramic Composite	Ø28 -3.5mm	H14 C1280
Co-Cr / Chrome-Cobalt	Ø28 -3.5mm	H10 1280	Composite Ceramic Composite	Ø28 +0mm	H14 C1281
Co-Cr / Chrome-Cobalt	Ø28 +0mm	H10 1281	*Composite* Ceramic Composite	Ø28 +3.5mm	H14 C1282
Co-Cr / Chrome-Cobalt	Ø28 +3.5mm	H10 1282	Composite Ceramic Composite	Ø32 -4mm	H14 C1320
Co-Cr / Chrome-Cobalt	Ø28 +7mm	H10 1283	*Composite* Ceramic Composite	Ø32 +0mm	H14 C1321
*** *Co-Cr* / Chrome-Cobalt	Ø28 +10.5mm	H10 1284	Composite Ceramic Composite	Ø32 +4mm	H14 C1322
Co-Cr / Chrome-Cobalt	Ø32 -4mm	H10 1320	*Composite* Ceramic Composite	Ø36 -4mm	H14 C1360
Co-Cr / Chrome-Cobalt	Ø32 +0mm	H10 1321	Composite Ceramic Composite	Ø36 +0mm	H14 C1361
Co-Cr / Chrome-Cobalt	Ø32 +4mm	H10 1322	*Composite* Ceramic Composite	Ø36 +4mm	H14 C1362
Co-Cr / Chrome-Cobalt	Ø32 +8mm	H10 1323	Composite Ceramic Composite	Ø40 -4mm	H14 C1400
Co-Cr / Chrome-Cobalt	Ø36 -4mm	H10 1360	*Composite* Ceramic Composite	Ø40 +0mm	H14 C1401
Co-Cr / Chrome-Cobalt	Ø36 +0mm	H10 1361	Composite Ceramic Composite	Ø40 +4mm	H14 C1402
Co-Cr / Chrome-Cobalt	Ø36 +4mm	H10 1362			
Co-Cr / Chrome-Cobalt	Ø36 +8mm	H10 1363			
Lot 3, Lot 12					

* *not validated for patients exceeding 75kgs (165lbs)*
limite de poids patient à 75kgs

** *not validated for patients exceeding 80kgs (176lbs)*
limite de poids patient à 80kgs

*** *not validated for use with 128° NSA femoral stem*
non compatible avec une tige fémorale latéralisée à 128°

**** *indicated only for the femoral neck fracture at the elderly*
indiquée uniquement pour la fracture du col chez la personne agée

STEMSYS instrumentation sets:
primary set, slotted revision set, and distal locking jig set.
Instrumentations STEMSYS :
première intention, révision fendue, et viseur de verrouillage distal.

Mentions légales :
Les implants STEMSYS sont des dispositifs médicaux implantables de classe III indiqués pour les arthroplasties primaires totales (PTH) ou partielles (PIH) ou pour les révisions d'arthroplasties (PTHR) de la hanche selon la version.
Les implants STEMSYS sont pris en charge par l'assurance maladie sous certaines conditions. informations sur le site *www.ameli.fr.*
Le chirurgien est expressément invité à lire attentivement les instructions mentionnées sur la notice d'utilisation incluse dans le conditionnement du DMI, ainsi que dans le manuel de technique opératoire délivré à la mise en place du produit ou disponible en téléchargement sur le site www.evolutisfrance.com.

***Materials* / Matériaux :**
Cementless stems: Titanium alloy TA6V according ISO5832-3 + gritblasted or Calcium Hydroxyapatite or T40 titanium + Calcium Hydroxyapatite
Cemented stems: High nitrogen content stainless steel according ISO5832-9
Femoral heads: Co-Cr according ISO5832-12 or Pure alumina according ISO6474-1 or Composite Ceramic according ISO6474-2
Vacuum packaging. Gamma ray sterilised
Tiges sans ciment : Alliage de titane TA6V selon ISO5832-3 + corindonné ou Hydroxyapatite ou plasma titane T40 et Hydroxyapatite
Tiges cimentées : Acier inox à haute teneur en azote selon ISO5832-9
Têtes fémorales : Cr-Co selon ISO5832-12 ou Alumine pure selon ISO6474-1 ou Céramique composite selon ISO6474-2
Conditionnement sous vide. Stérilisation gamma.

Evolutis
Avenue de la Libération, 42720 Briennon, France
0086 Tel : +33. (0)477.60.79.99 – Fax : +33. (0)477.60.79.90

Designed and Manufactured in France

www.evolutisfrance.com

Dec 2017 / Réf. : BI_STEMSYS FP H46 (H46 432)

Evolutis
CREATEUR FABRICANT

Bi-polar cup for hip hemi-plasty.
Positive offset for enhanced stability. (anti-capsizing)

Bi-polar cup with locking ring

Snap in Bi-polar cup

Dislocation avoidable (daN.m)

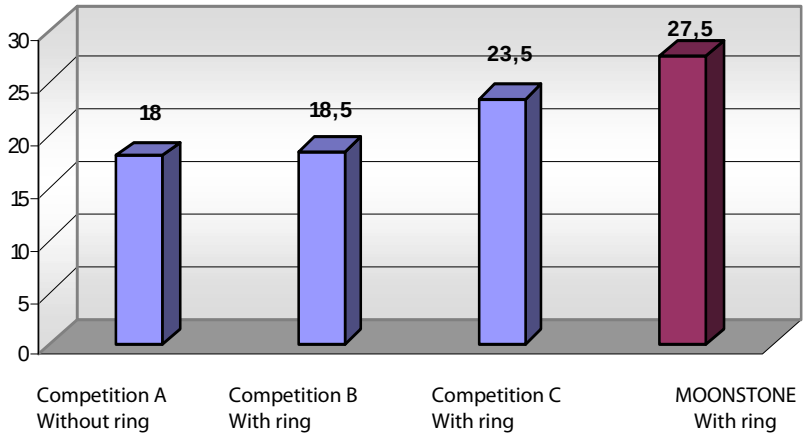

MOONSTONE ®

Bi - polar cup with or without ring

Evolutis

CREATEUR FABRICANT

CUP WITH RING	
Ref.	Lot 1 Description
H35 2239	Ø39 for head 22 mm
H35 2241	Ø41 for head 22mm
H35 2243	Ø43 for head 22mm
H35 2245	Ø45 for head 22mm
H35 2843	Ø43 for head 28mm
H35 2845	Ø45 for head 28mm
H35 2847	Ø47 for head 28mm
H35 2849	Ø49 for head 28mm
H35 2851	Ø51 for head 28mm
H35 2853	Ø53 for head 28mm
H35 2855	Ø55 for head 28mm
H35 2857	Ø57 for head 28mm
H35 2859	Ø59 for head 28 mm

Even sizes available on request

CUP WITHOUT RING	
Ref.	Description
H35 R2843	diam 43 for head 28 mm
H35 R2845	diam 45 for head 28 mm
H35 R2847	diam 47 for head 28 mm
H35 R2849	diam 49 for head 28 mm
H35 R2851	diam51 for head 28 mm
H35 R2853	diam 53 for head 28 mm
H35 R2855	diam 55 for head 28 mm
H35 R2857	diam57 for head 28 mm
H35 R2859	diam 59 for head 28 mm

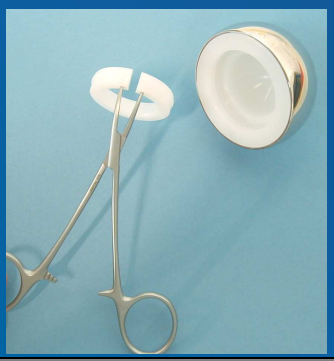

INSTRUMENTATION FOR RING CUP	
Ref.	Description
S01 006	Ring forceps

INSTRUMENTS CUP WITHOUT RING	
Ref	Description
H52 033	Inlay press
H52 030	Inlay press a screw
H52 035	Mobile inlay impactor
H52 031	Pushing nozzle

INSTRUMENT SETS	
Ref.	Description
H36 001	Head mesurement
H36 002	Cup impactor nozzle
H01 023	Cup impactor handle
H36 003	Measurement sheet

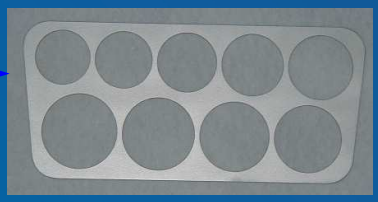

Material : UHMWPE in compliance with ISO5834-1 and 2
316 L stainless steel in compliance with ISO5832-1.

Packaging: vacuum packed and gamma ray sterilized.

www.evolutisfrance.com

Avenue de la Libération - 42720 BRIENNON - tél: +33 (0)4 77 60 79 99 - fax: +33 (0)4 77 60 79 90

REF H36 521 –06/11

CE 0499

www.evolutisfrance.com

Evolutis

CREATEUR FABRICANT

Freeliner®

Acetabular cup for Ceramic or Highly-Crosslinked PEXEL® -E Polyethylene liner

Cupule acétabulaire à insert Céramique ou Polyéthylène Hautement Réticulé PEXEL® -E

Evolutis
MOTION INSIDE

The **FREELINER®** acetabular cup for Total Hip Arthroplasty is designed for cementless fixation to the bone, and enable 3 choices of friction bearing:
• moderately crosslinked PEXEL® polyethylene against a metal or a ceramic head,
• highly-crosslinked polyethylene with vitamin-E (PEXEL®-E) against a metal or a ceramic head,
• ceramic composite against a ceramic composite head.
The **FREELINER®** cup has been designed to ensure maximum safety during implantation and security for the patient when used with either polyethylene or ceramic liners. The cup is uncompromisingly adapted to the different characteristics of these 2 bearings:
• the inner surface of the taper is smooth and free of asperities to facilitate and secure the insertion of the ceramic insert,
• the stability of the polyethylene insert is secured by 10 anti-rotational spurs and a locking ring situated on the equator.

*La cupule acétabulaire **FREELINER®** est un composant de prothèse totale de hanche destiné à une fixation osseuse sans ciment, et compatible au choix avec 3 couples de frottement :*
• polyéthylène PEXEL® modérément réticulé avec métal ou céramique,
• polyéthylène vitaminé-E hautement réticulé (Pexel®-E) avec métal ou céramique,
• céramique composite avec céramique composite.
***FREELINER®** a été conçue pour assurer le maximum de sécurité de mise en place et d'usage qu'elle soit associée avec un insert polyéthylène ou un insert céramique. La cupule a été adaptée aux caractéristiques propres à chacun des couples de frottement :*
• L'intégrité de la portée conique a été préservée pour sécuriser la mise en place et la fixation de l'insert céramique.
• La stabilité des inserts en polyéthylène est sécurisée par 10 ergots anti-rotation et un bourrelet de clippage situé en avant de la portée conique.

- Choice of 3 friction bearings
- Primary stability enhanced by the high roughness of the coating
- Osseo-integration on highly porous substrate (40 to 70%)
- Safety and reproducibility of the surgical technique

- *Choix parmi 3 couples de frottement*
- *Stabilité primaire induite par la rugosité de surface du revêtement*
- *Ostéointégration secondaire sur substrat hautement poreux (40 à 70%)*
- *Sécurité et reproductibilité de la technique d'implantation*

Moderately crosslinked PEXEL® polyethylene

- Moderately crosslinked at 40kGy max.
- VacUpac vacuum packaging
- Anti-dislocation 6mm Posterior wall
- Anterior chamfer of 32°
- Inner Ø28mm

Polyéthylène modérément réticulé PEXEL®

- Réticulation modérée à 40kGy max.
- Conditionnement sous vide VacUpac
- Mur postérieur anti-luxation de 6mm
- Chanfrein antérieur de 32°
- Ø interne 28mm

Ceramic *(Composite of Alumina and Zirconia)*

- Composite of alumina and zirconia ceramic
- New SLWZero design with constant radius
- Center of rotation aligned with the equator of the liner
- Liner protected from "chipping" by the peripheral border on the cup
- Inner Ø32, 36, and 40mm

Céramique (composite d'alumine et zircone)

- Composite d'alumine et de zircone
- Nouveau profil SLWZero à rayon constant
- Centre de rotation positionné sur l'équateur
- insert protégé de l'écaillage ("chipping") par le rebord périphérique de la cupule
- Ø interne 32, 36, et 40mm

Highly-crosslinked PEXEL®-E polyethylene with vitamin-E

- Sequentially crosslinked UHMWPE at 100kGy max.
- VacUpac vacuum packaging
- Oxydation inhibited by content of 0.1%wt of α-tocopherol (vitamin-E) blended in the material before compression molding
- with circumferential chamfer of 20°
- Inner Ø32 and 36mm

Polyéthylène PEXEL®-E hautement réticulé à la vitamine-E

- UHMWPE réticulé séquentiellement à 100kGy max.
- Conditionnement sous vide VacUpac
- Inhibition de l'oxydation par adjonction de 0,1%wt de α-tocopherol (vitamine-E) dans la poudre avant consolidation par pressage à chaud (compression molding)
- Inserts sans débord avec chanfrein circonférentiel de 20°
- Ø interne 32 et 36mm

Cup Ø *Ø Cup.*	PEXEL *PEXEL*	PEXEL-E *PEXEL-E*		Ceramic *Ceramique*	
44 (*)	28 (*)				
46	28	32		32	
48	28	32		32	
50	28	32	36	36	
52	28	32	36	36	
54	28	32 (*)	36	36	40
56	28	32 (*)	36	36	40
58	28	32 (*)	36	36	40
60	28	32 (*)	36	36	40
62	28	32 (*)	36	36	40
64 (*)	28 (*)	32 (*)	36 (*)	36 (*)	40 (*)
66 (*)	28 (*)	32 (*)	36 (*)	36 (*)	40 (*)

Table: diameters and materials of available friction couples according to the diameter of the shell.
Tableau : diamètres et matériaux des couples de frottement disponibles en fonction du diamètre de la cupule.
(*): References available only on special request
Références disponibles sur demande spéciale

Freeliner® PEXEL 28 | Freeliner® PEXEL-E 32 | Freeliner® PEXEL-E 36 | Freeliner® Ceramic 36

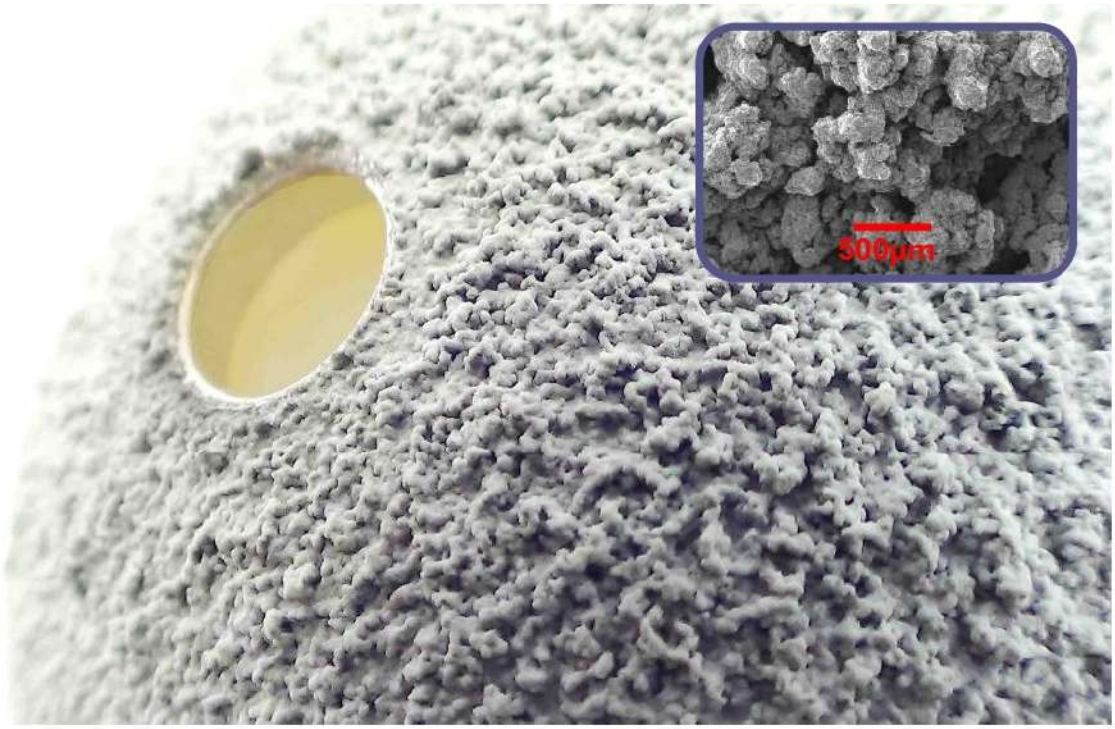

Hemispheric cup
Primary stability through a plasma spray high rough grade porous coating
Dimensional press-fit from 1.26 to 1.66mm according to the diameter of the cup
Optional complementary fixation with screws (Ø6.0 cancellous self-tapping):
- 4 holes in the superior part of the cup on a constant bow of 120°
- angular clearance of 20° for the screws

Cementless osseo-integration coating:
- 80µm of calcium hydroxyapatite
- 400 to 600µm of porous titanium

Cupule hémisphérique
Accroche primaire par revêtement poreux à haute rugosité
Press-fit dimensionnel de 1,26 à 1,66mm selon le diamètre de la cupule
Complément de fixation par vissage Ø6mm à profil spongieux autotaraudant :
- 4 trous de vis orientés dans le toit du cotyle sur un arc constant de 120°
- amplitude de débattement angulaire des vis de 20°.
Revêtement pour fixation secondaire sans ciment :
- 80µm d'hydroxyapatite de calcium
- 400 à 600µm de titane poreux

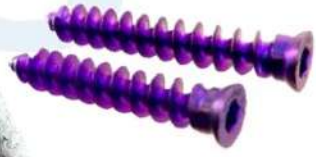

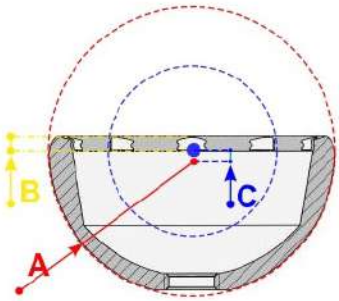

Reference diameter *Diamètre de référence*	True diameter *Diamètre réel* A	Total Press-Fit *total*	Equatorial lip *Bord équatorial* B	Offset C	*Revêtement* T40 Coating	*Revêtement* HAP *Coating*
Ø44	45,26	1,26	2,6	1	400µm	80µm
Ø46	47,46	1,46	2,6	1	500µm	80µm
Ø48	49,66	1,66	2,6	0	600µm	80µm
Ø50	51,66	1,66	2,6	1	600µm	80µm
Ø52	53,66	1,66	2,6	0	600µm	80µm
Ø54	55,66	1,66	2,6	1	600µm	80µm
Ø56	57,66	1,66	2,6	0	600µm	80µm
Ø58	59,66	1,66	2,6	0	600µm	80µm
Ø60	61,66	1,66	2,6	0	600µm	80µm
Ø62	63,66	1,66	2,6	0	600µm	80µm
Ø64	65,66	1,66	2,6	0	600µm	80µm
Ø66	67,66	1,66	2,6	0	600µm	80µm

Table: reference and true dimensions, press-fit value, offset of rotation center, and coating thicknesses for each size of Freeliner cup.
Tableau : *dimensions de référence et réelles, valeur du press-fit, offset du centre de rotation, et épaisseurs de revêtement pour chaque diamètre de cupule Freeliner.*

The FREELINER® cup includes a 2.6mm peripherical rim meant for:
- preventing the stem neck from impinging on the inner edge of the ceramic liner,
- securing the fixation of the PEXEL® and PEXEL®-E liners while preserving the integrity of the conical seating.

La cupule FREELINER® intègre un rebord équatorial de 2,6mm dont la fonction est double :
- empêcher le contact entre le col de la tige et le bord de l'insert céramique,
- maintenir et orienter les inserts PEXEL® et PEXEL®-E tout en évitant d'altérer la portée conique dans la cupule.

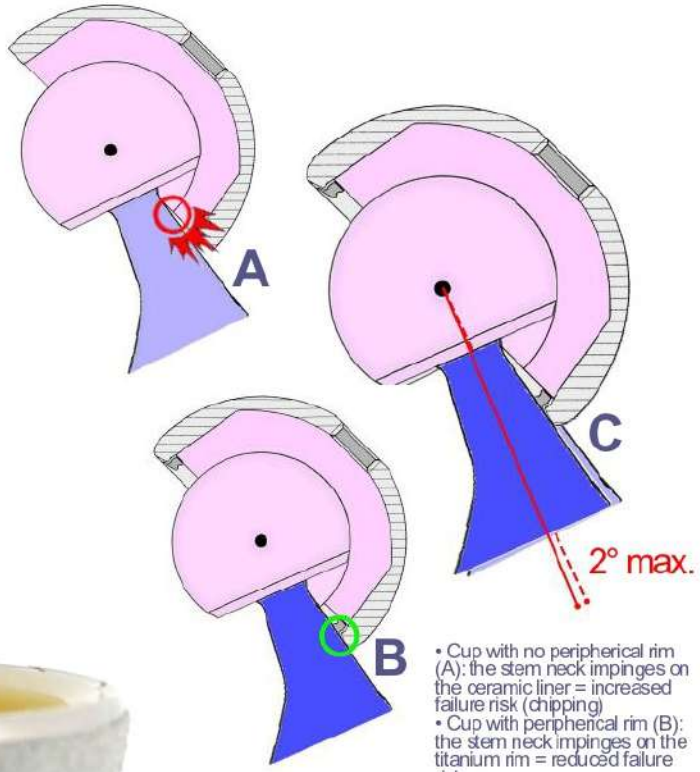

• Cup with no peripherical rim (A): the stem neck impinges on the ceramic liner = increased failure risk (chipping)
• Cup with peripherical rim (B): the stem neck impinges on the titanium rim = reduced failure risk
• Comparison (C): less than 2° of ROM reduction

• Cupule sans rebord équatorial (A) : contact col de tige sur céramique = risque accru de faillite sur "écaillage" (chipping)
• Cupule avec rebord équatorial (B) : contact col de tige sur cupule = risque d'écaillage réduit
• Comparaison (C) : réduction du débattement inférieure à 2°

Safety & Reproducibility*

**Sécurité et Reproductibilité de la technique d'implantation*

The instrumentation of the FREELINER® cup allows the operator to pre-impact the liner on the table BEFORE introducing it into the patient's acetabulum. This possibility helps to control the axis of introduction of the liner into the cup, to make sure the fixation taper is clean and dry, and to easily calibrate the impaction force.
This surgical protocol which is specific to the FREELINER® cup has been developped in accordance with the Safety Reminder of the ceramic material manufacturer [1] which recommends to:
• make sure that the acetabular cup and the ceramic insert are clean dry and not damaged,
• carefully assemble the components,
• confirm proper assembly and then impact,

L'instrumentation de la cupule FREELINER® permet de pré-impacter l'insert céramique dans la cupule AVANT sa mise en place dans le cotyle du patient. Ceci garantit une surface de fixation propre et sèche à l'interface des 2 pièces, et facilite la mise en place de l'insert dans l'axe de la cupule et le dosage de son impaction.
Ce protocole opératoire spécifique à la cupule FREELINER® est conforme aux recommandations (Safety Reminder [1]) éditées par le fabricant du matériau céramique qui conseillent :
• de s'assurer que la cupule et l'insert céramique sont propres, secs et non abîmés,
• d'assembler les composants avec attention et de verifier au doigt leur alignement,
• de confirmer le bon positionnement, puis d'impacter dans l'axe de la cupule.

[1] *Safety Reminder / Biolox inserts. Ceramtec GmbH, Medical Products Division, D-73207 Plochingen, Germany. August 2014.*
http://www.ceramtec.com/files/mt_safety_reminder_inserts_en.pdf

Lot 3, Lot 12

Freeliner®

Ref. Cup.		Ref. Liner Ø28 UHMWPE "PEXEL"	Ø32 XLPE "PEXEL-E"	Ø36 XLPE "PEXEL-E"	Ø32 CERAMIC	Ø36 CERAMIC	Ø40 CERAMIC
H75 4438(*)	FREELINER cup/cupule Ø44	H75 P3628(*)					
H75 4640	FREELINER cup/cupule Ø46	H75 P4028	H75 XE4032		H75 C4032		
H75 4840	FREELINER cup/cupule Ø48						
H75 5044	FREELINER cup/cupule Ø50	H75 P4428	H75 XE4432	H75 XE4436		H75 C4436	
H75 5244	FREELINER cup/cupule Ø52						
H75 5448	FREELINER cup/cupule Ø54	H75 P4828	H75 XE4832(*)	H75 XE4836		H75 C4836	H75 C4840
H75 5648	FREELINER cup/cupule Ø56						
H75 5850	FREELINER cup/cupule Ø58	H75 P5028	H75 XE5032(*)	H75 XE5036		H75 C5036	H75 C5040
H75 6050	FREELINER cup/cupule Ø60						
H75 6254	FREELINER cup/cupule Ø62						
H75 6454(*)	FREELINER cup/cupule Ø64	H75 P5428	H75 XE5432(*)	H75 XE5436		H75 C5436	H75 C5440
H75 6654(*)	FREELINER cup/cupule Ø66						

(*): References available only on special request
Références disponibles sur demande spéciale

A colour code (red, yellow, blue, orange, green, pink) facilitates the cup and liner size match. Example for a 58mm cup, the colour code is "green": once the material and the inner diameter are selected, choose the corresponding liner along the green line.

Un code couleur (rouge, jaune, bleu, orange, vert, rose) facilite la correspondance entre la cupule et l'insert. Exemple pour une cupule de diamètre 58, il faudra sélectionner l'insert identifié par une couleur "verte" dans le frottement et le diamètre de couple souhaité.

Acetabular screw / *vis à cotyle*

	Length *Longueur*	Ref.
Ø6.0 Screw/Vis	20 mm	H15 SB6020
Ø6.0 Screw/Vis	25 mm	H15 SB6025
Ø6.0 Screw/Vis	30 mm	H15 SB6030
Ø6.0 Screw/Vis	35 mm	H15 SB6035
Ø6.0 Screw/Vis	40 mm	H15 SB6040
Ø6.0 Screw/Vis	45 mm	H15 SB6045
Ø6.0 Screw/Vis	50 mm	H15 SB6050

Evolutis
MOTION INSIDE

Material / Matériau
Cup: TA6V titanium alloy according ISO 5832-3. Porous titanium and Calcium hydroxyapatite coating
Screw: TA6V titanium alloy according ISO 5832-3
Liner: UHMWPE according ISO 5834-1 and 2, or Composite Ceramic according ISO 6474-2
Packaging: vacuum packed and gamma ray sterilized
Cupule : alliage de titane TA6V selon ISO 5832-3. Revêtement bicouche Titane poreux et HAC
Vis : alliage de titane TA6V selon ISO 5832-3
Insert : UHMWPE selon ISO 5834-1 et 2 ou Céramique composite selon ISO 6474-2
Conditionnement : emballage sous vide. Stérilisation rayons gamma.

Mentions légales
Les implants FREELINER sont des dispositifs médicaux implantables de classe III indiqués pour les arthroplasties primaires totales (PTH) de la hanche.
Les implants FREELINER sont pris en charge par l'assurance maladie sous certaines conditions. Pour plus de précision, merci de vous rendre sur le site www.ameli.fr.
Le chirurgien est expressément invité à lire les instructions mentionnées sur la notice d'utilisation incluse dans le conditionnement du DMI, ainsi que le manuel de technique opératoire délivré à la mise en place du produit ou disponible en téléchargement sur le site www.evolutisfrance.com.

CE 0086 Evolutis
Avenue de la Libération, 42720 Briennon, France
Tel : +33. (0)477.60.79.99 – Fax : +33. (0)477.60.79.90

Designed and Manufactured in France
www.evolutisfrance.com

Dec 2017 / Réf. : BL_FREELINER DOC H76 (H76 430)
Numéro de référencement : 1507/EVOLUTIS/PM/001

www.evolutisfrance.com

Evolutis

CREATEUR FABRICANT

Product Sheet

CAPITOLE®

Fiche Produit

Dual Mobility acetabular Cup for primary and revision indications

Cupule acétabulaire à double mobilité pour arthroplastie primaire ou de révision

Evolutis MOTION INSIDE

References

CAPITOLE dual mobility acetabular cup
Cupule acétabulaire à double mobilité CAPITOLE

Shell ø *Cupule*	Press-fit I	2 pegs T *2 plots T*	Cemented C *Cimenté C*	Revision R	Revision RA
ø45	H51 I245	H51 T245	H51 C045	-	-
ø47	H51 I247	H51 T247	H51 C047	H51 R247	H51 RA247
ø49	H51 I249	H51 T249	H51 C049	H51 R249	H51 RA249
ø51	H51 I251	H51 T251	H51 C051	H51 R251	H51 RA251
ø53	H51 I253	H51 T253	H51 C053	H51 R253	H51 RA253
ø55	H51 I255	H51 T255	H51 C055	H51 R255	H51 RA255
ø57	H51 I257	H51 T257	H51 C057	H51 R257	H51 RA257
ø59	H51 I259	H51 T259	H51 C059	H51 R259	H51 RA259
ø61	H51 I261	H51 T261	H51 C061	H51 R261	H51 RA261
ø63	H51 I263	H51 T263		H51 R263	H51 RA263
ø65	-	-	LOT 4	H51 R265	-

CAPITOLE dual mobility liner
Insert à double mobilité CAPITOLE

Liner ø *Insert*	Inner ø *Interne* 22.2 PE	Inner ø *Interne* 28 PE	Inner ø *Interne* 28 Ceramic
ø45	H51 M2245	-	-
ø47	H51 M2247	H51 M2847	-
ø49	H51 M2249	H51 M2849	-
ø51	H51 M2251	H51 M2851	H61 MA2850
ø53	H51 M2253	H51 M2853	H61 MA2852
ø55	H51 M2255	H51 M2855	H61 MA2854
ø57	H51 M2257	H51 M2857	H61 MA2856
ø59	H51 M2259	H51 M2859	H61 MA2858
ø61	H51 M2261	H51 M2861	H61 MA2860
ø63	H51 M2263	H51 M2863	-
ø65	H51 M2265	H51 M2865	-

Screws and Pegs
Vis et plots

Description	ø (mm)	L. (mm)	Cat N°
Cortical screw / *Vis corticale*	5	35	H16 S5035
Cortical screw / *Vis corticale*	5	40	H16 S5040
Cortical screw / *Vis corticale*	5	45	H16 S5045
Cortical screw / *Vis corticale*	5	50	H16 S5050
Cortical screw / *Vis corticale*	5	55	H16 S5055
Cortical screw / *Vis corticale*	5	60	H16 S5060
Tripode pegs (set of 2) *Plots Tripode (par 2)*	7	15	H51 P2715

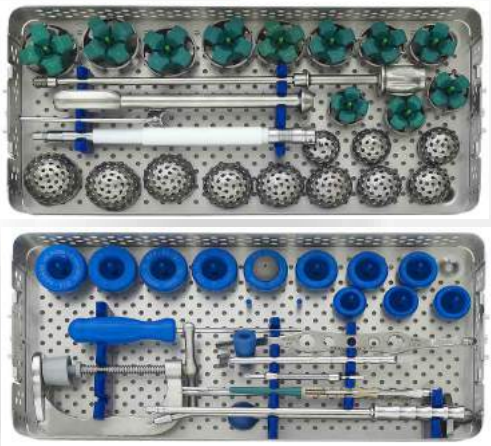

Instrumentation CAPITOLE H52 9100

Mentions légales :
Les implants CAPITOLE sont des dispositifs médicaux implantables de classe III indiqués pour les arthroplasties primaires totales (PTH) ou en révision (PTHR) de la hanche selon la version.
Les implants CAPITOLE sont pris en charge par l'assurance maladie.Informations sur www.ameli.fr.
Le chirurgien est expressément invité à lire attentivement les instructions mentionnées sur la notice d'utilisation incluse dans le conditionnement du DMI, ainsi que le manuel de technique opératoire délivré à la mise en place du produit ou disponible en téléchargement sur le site www.evolutisfrance.com.

***Materials* / Matériaux :**
Cups: High Nitrogen Content Stainless steel according ISO 5832-9 coated with porous T40 and Calcium Hydroxyapatite
Liners: UHMWPE according ISO 5834-1 & 2
Screws: Stainless steel according ISO 5832-1
Pegs: titanim alloy (TA6V) according ISO 5832-3
Packaging: Sterilized under Gamma irradiation, VacUpac packaging
Cupules : Acier inoxydable à Haute Teneur en Azote selon ISO 5832-9 revêtu T40 poreux et Hydroxyapatite
Inserts : UHMWPE selon ISO 5834-1 et 2
Vis : Acier inoxydable selon ISO 5832-1
Plots : alliage de titane (TA6V) selon ISO 5832-3
Conditionnement : Stérilisé sous rayonnement Gamma, conditionnement VacUpac

CE 0499 Evolutis
Avenue de la Libération, 42720 Briennon, France
Tel : +33. (0)477.60.79.99 – Fax : +33. (0)477.60.79.90

Designed and Manufactured in France

www.evolutisfrance.com

Mars 2016 / Ref: BI_CAPITOLE DM FP H52 (H52 430)

www.evolutisfrance.com

Evolutis

CREATEUR FABRICANT

Product Sheet

Hactiv®
Reactiv™
Cemtiv®

Fiche Produit

Implant fémoral autostable

Première intention et révision

Self-blocking femoral implant

Primary and revision indications

Evolutis
MOTION INSIDE

References

Implants HACTIV® / CEMTIV® / REACTIV™ *Implants*

	Standard 135° première intention *Primary Standard 135°*			Latero-varus 128° première intention *Primary Latero-varus 128°*		Standard 135° Révision Revision Standard 135°			
	HAP	à colerette Collared HAP	Cimenté *Cemented*	HAP	à colerette *Collared* HAP	Fendue *Slotted*	Fendue à colerette *Slotted Collared*	Verrouillage Distal *Distal Locking*	A Colerette Cimenté *Collared Cemented*
Taille / *Size* 7	H49 007 (1)(2)	NA	NA	NA	NA	NA	NA	NA	NA
Taille / *Size* 8	H49 008 (1)(2)	NA	NA	NA	NA	NA	NA	NA	NA
Taille / *Size* 9	H49 009	H49 C09	H49 S09	H49 L009	H49 LC09	NA	NA	NA	NA
Taille / *Size* 10	H49 010	H49 C10	H49 S10	H49 L010	H49 LC10	NA	NA	NA	NA
Taille / *Size* 11	H49 011	H49 C11	H49 S11	H49 L011	H49 LC11	NA	NA	NA	NA
Taille / *Size* 12	H49 012	H49 C12	H49 S12	H49 L012	H49 LC12	H49 R012	H49 RC012	H49 RC112	H49 SRC012
Taille / *Size* 13	H49 013	H49 C13	H49 S13	H49 L013	H49 LC13	NA	NA	NA	NA
Taille / *Size* 14	H49 014	H49 C14	H49 S14	H49 L014	H49 LC14	H49 R014	H49 RC014	H49 RC114	H49 SRC014
Taille / *Size* 15	H49 015	H49 C15	H49 S15	H49 L015	H49 LC15	NA	NA	NA	NA
Taille / *Size* 16	H49 016	H49 C16	H49 S16	H49 L016	H49 LC16	H49 R016	H49 RC016	H49 RC116	H49 SRC016
Taille / *Size* 18	H49 018	H49 C18	NA	H49 L018	H49 LC18	H49 R018	H49 RC018	H49 RC118	H49 SRC018
Taille / *Size* 20	H49 020	H49 C20 (1)	NA	H49 L020 (1)	H49 LC20 (1)	H49 R020	H49 RC020	H49 RC120	H49 SRC020

Lot 4

Têtes fémorales *Femoral Heads*

Diamètre *Diameter*	Longueur *Length*	Acier Inox *Stainless steel*	Chrome-Cobalt *Cobalt-Chromium*	Céramique Composite *Composite Ceramic*
Ø22	-2.0mm	H11 1220	H10 1220	-
	+0mm	H11 1221	H10 1221	-
	+2.0mm	H11 1222	H10 1222	-
Lot 1, Lot 4	-7mm	H11 1279 (1)	H10 1279 (1)	-
Ø28	-3.5mm	H11 1280	H10 1280	H14 C1280
	+0mm	H11 1281	H10 1281	H14 C1281
	+3.5mm	H11 1282	H10 1282	H14 C1282
	+7mm	H11 1283	H10 1283	-
	+10.5mm	-	H10 1284 (1)(3)	-
Ø32	-4mm	H11 1320	H10 1320	H14 C1320
	+0mm	H11 1321	H10 1321	H14 C1321
	+4mm	H11 1322	H10 1322	H14 C1322
	+8mm	H11 1323	H10 1323	-
Ø36	-4mm	-	H10 1360	H14 C1360
	+0mm	-	H10 1361	H14 C1361
	+4mm	-	H10 1362	H14 C1362
	+8mm	-	H10 1363	-
Ø40	-4mm	-	-	H14 C1400
	+0mm	-	-	H14 C1401
	+4mm	-	-	H14 C1402

(1) implants disponibles sur demande spéciale / *implants available only on special request*
(2) limite de poids patient à 75kgs / *not validated for patients exceeding 75kgs*
(3) non compatible avec les tiges latéralisées à 128° / *not validated for use with 128° lateralized stems*

Vis de verrouillage *Locking screw*

Diamètre *Diameter*	Longueur *Length*	Ref. *Cat. N°*
Ø6.0 /4.5	25mm	H15 SC6025
Ø6.0 /4.6	30mm	H15 SC6030
Ø6.0 /4.7	35mm	H15 SC6035
Ø6.0 /4.8	40mm	H15 SC6040

Manche porte-râpe adapté ; postéro-latéral, décalé, ou antérieur
Choice of broach handle: postero-lateral, offset, or anterior

Instrumentation HACTIV® *Instrument Set*

Instrumentation	Ref. *Cat. N°*
Hactiv première intention *Hactiv Primary*	H50 9100
Hactiv Revision base *Hactiv revision basis*	H50 9101
Complémentaire alésage *Reamer complementary set*	H50 9103
Viseur de verrouillage distal *Distal locking aiming jig*	H38 9103

Mentions légales :
Les implants HACTIV, CEMTIV et REACTIV sont des dispositifs médicaux implantables de classe III indiqués pour les arthroplasties primaires totales (PTH) partielles (PIH) ou pour les révisions d'arthroplastie (PTHR) de la hanche selon la version.
Les implants HACTIV, CEMTIV et REACTIV sont pris en charge par l'assurance maladie sous certaines conditions.
Informations sur le site *wwww.ameli.fr*.
Le chirurgien est expressément invité à lire attentivement les instructions mentionnées sur la notice d'utilisation incluse dans le conditionnement du DMI ainsi que le manuel de technique opératoire délivré à la mise en place du produit ou disponible en téléchargement sur le site *www.evolutisfrance.com*.

Matériaux / *Materials:*
Tiges HACTIV® et REACTIV™ revêtues : alliage de titane TA6V selon ISO 5832-3 et HAP
Tiges CEMTIV® à cimenter : acier inox. à haute teneur en azote selon ISO 5832-9
Têtes fémorales : acier inox. à haute teneur en azote selon ISO 5832-9 ou alliage de chrome-cobalt selon ISO 5832-4 ou céramique d'alumine pure selon ISO 6474-1 ou céramique composite selon ISO 6474-2
Vis de verrouillage : alliage de titane TA6V selon ISO 5232-2
Conditionnement sous vide. Stérilisation rayons gamma.
Coated HACTIV® and REACTIV™ stems : titanium alloy TA6V according ISO 5832-3 + Calcium Hydroxyapatite
Cemented CEMTIV® stems : high nitrogen content stainless steel according ISO 5832-9
Femoral heads : high nitrogen content stainless steel according ISO 5832-9 or cobalt-chromium alloy according ISO 5832-4 or pure alumina ceramic according ISO 6474-1 or ceramic composite according ISO 6474-2
Locking screws: *titanium alloy TA6V according ISO 5832-3*
Vacuum packed. Gamma ray sterilised.

CE 0086 Evolutis
Avenue de la Libération, 42720 Briennon, France
Tel : +33. (0)477.60.79.99 – Fax : +33. (0)477.60.79.90

Designed and Manufactured in France

www.evolutisfrance.com

COVISION
ORTHOPAEDICS

SUPERICA Medial-Pivot Knee System
Surgical Technique

Introduction

Why set out to design a better knee system? Today, according to the latest literature, nearly 20% of all patients are unhappy with their total knee replacement due to residual pain, functional issues and early implant failure.

Superica Knee System is designed to answer the limitations of traditional implants by delivering superior flexion stability, anatomic motion, and wear -limiting design characteristics.

Stable Motion, Normal Function, Natural Feel

The Medial-Pivot Knee is uniquely engineered to reproduce a healthy knee's stability and motion. With a stable, pivoting medial side and a lateral side that rolls forward or backward throughout flexion, the SUPERICA MEDIAL PIVOT Knee System is designed to feel and function like a natural knee.

ACL-PCL Substituting

High Conformity, Constant Radius, Unique Design.

The Medial-Pivot Knee features a highly conforming medial side that results from a constant radius design. Reproducing the natural function and stability of the ACL and PCL, this design is unique from every other less conforming traditional knee system. It gives the MedialPivot Knee natural motion, so it feels more like a normal knee.

Introduction

High Conformity

High Conforming Articulations, Stable Range of Motion, Fewer Revisions.

It is routine for patients to complain of instability following a traditional knee replacement. Studies also clearly show instability to be the leading cause of early revisions.By delivering a more secure, highly conforming articulation, the Superica Knee System provides the kind of stability throughout the range of motion that patients seek.

Constant Radius

Natural Biomechanics,Anterior-Posterior Stability.

With a constant radius design, the new Knee System gives patients a more stable feeling and more normal biomechanics. The constant radius in both the coronal and sagittal planes is uniquely designed to mimic the movement of the natural knee. This is a significant benefit over traditional multi-radius implants, which are typically less stable and fail to deliver the same natural feeling to the patient.

With a constant radius femoral component featuring a highly congruent tibial insert, the new Knee System also delivers superior stability in mid-flexion and prevents anterior-posterior translation. The simple result is that the Superica constant radius knee design has been documented in literature to achieve higher clinical function than competitive multi-radius designs.

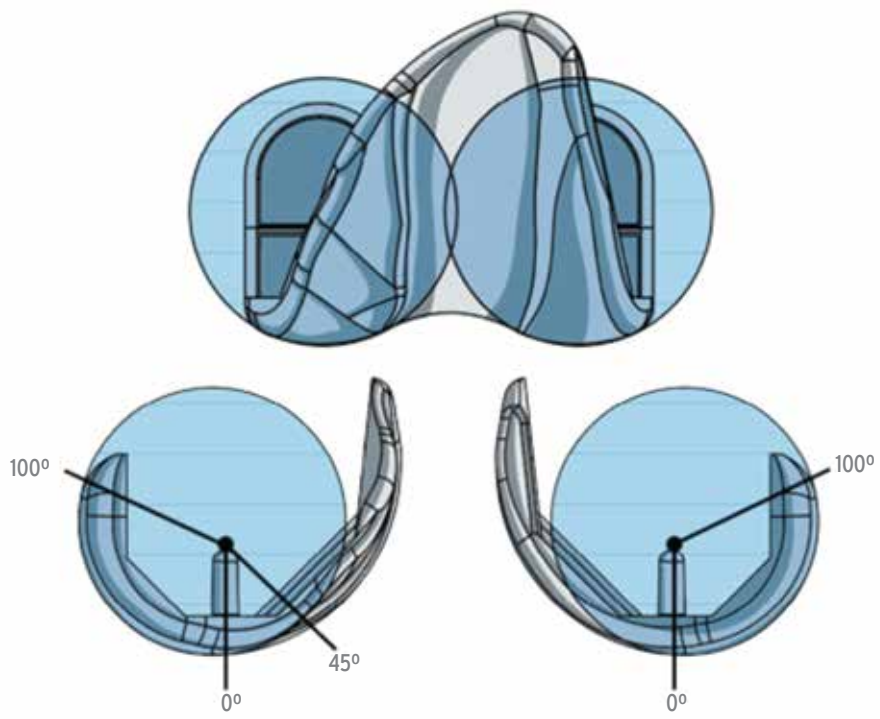

Only knee design with spherical geometry in both sagittal and coronal planes.

Introduction

Feels Normal, Behaves Naturally, Functions Like the Human Knee.

With the increasingly active lives of patients today, they have come to demand and expect an implant that feels normal and behaves naturally. The Superica MEDIAL PIVOT Knee System has uniquely designed structures, contours and movements that look, feel and function like the human knee. This is in stark contrast to traditional knee replacements that do not possess design features similar to the human knee, and thus do not reproduce performance that feels like a natural knee.

Equally important and essential to a normal feeling replacement is the Superica Knee System global sizing profile. It helps assure a more natural fit that promotes normal feeling functionality and higher quality of life.

Replicates ACL and PCL, Preferred Over All Other Designs, More Natural Feeling.

One reason patients can tell the difference between their natural knee and a replacement is soft tissue. One study found that our Medial-Pivot design, which effectively substitutes for the ACL and PCL, is strongly preferred over all other designs (CR, PS, and Mobile-Bearing).2

The Superica tibial insert features a high anterior and posterior lip which substitutes for both cruciate ligaments and delivers a more normal feeling for the patient. The result is a more natural feeling for patients that increases proprioception.

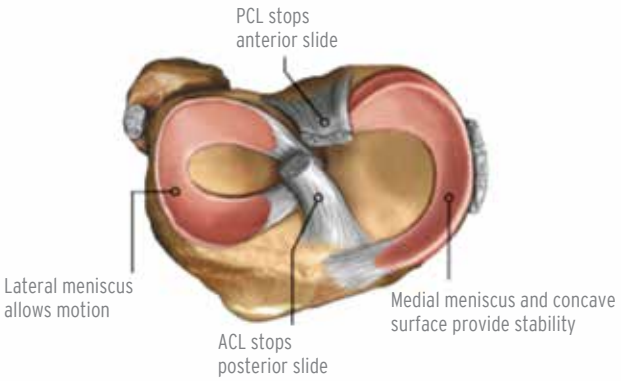

Anatomic structure of the normal knee.

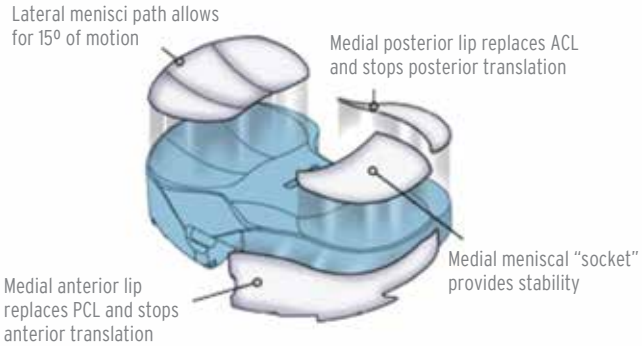

Knee System replicates normal knee structures to recreate natural function.

Intended Use

SUPERICA MEDIAL PIVOT instrumentation is designed to be applicable to both less-invasive and standard total knee procedures. Therefore, surgeons should employ the technique they are most comfortable with; be it medial parapatellar, subvastus or midvastus. With the SUPERICA MEDIAL PIVOT instrumentation, the preparation of the femur and tibia can be performed independently. This choice is left to the surgeon's discretion.

Indications

COVISION Total Knee Systems are indicated for use in knee arthroplasty in skeletally mature patients with the following conditions:

1. noninflammatory degenerative joint disease including osteoarthritis, traumatic arthritis, or avascular necrosis;
2. inflammatory degenerative joint disease including rheumatoid arthritis;
3. correction of functional deformity;
4. revision procedures where other treatments or devices have failed; and treatment of fractures that are unmanageable using other techniques.

SUPERICA Medial-Pivot Tibial Base and Insert Components are for use with bone cement.

Surgical Technique

Proper surgical procedures and techniques are ultimately the responsibility of the operating medical professionals. The following guidelines are furnished for informationl purposes only and relate specifically to the use of the SUPERICA Total Knee Prosthesis instruments and trials by Covision. Each surgeon must evaluate the appropriateness of the information provided based on his or her personal training and experience.

1. Distal Femural Resection

Initiate an opening in the femoral canal with the 9.5mm (3/8") diameter drill bit. The hole may be placed sligthly medial and anterior to the intercondylar notch. Insert the fluted IM reamer/rod into the femoral canal, being sure to irrigate and aspirate several times to reduce the chance of a fat embolus. Turn the reamer during insertion with the T-handle. FIGURE 1-2

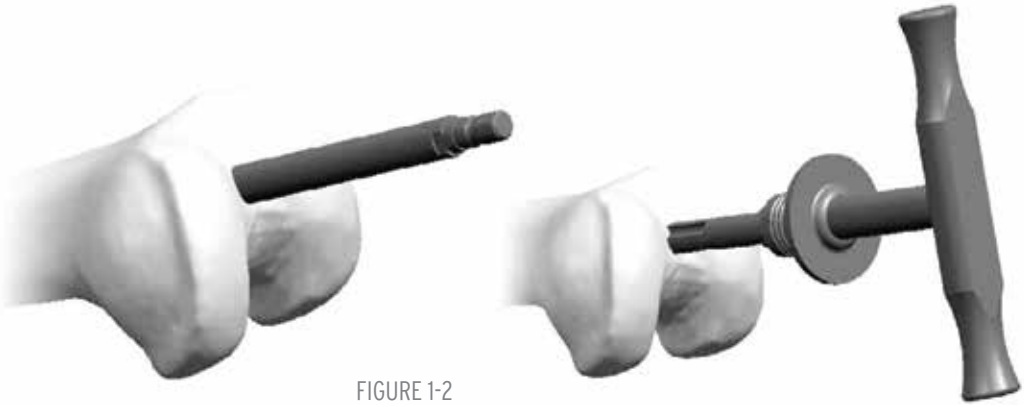

FIGURE 1-2

Distal resection blocks are available in 9mm, 11mm, and 13mm. Load the appropriate distal resection block onto the distal resection paddle and lock them together by sliding the locking button to the right (FIGURE 3).

Insert the distal resection paddle onto the valgus bushing The valgus bushing has both a "Left" and "Right" side, and has three slots which allow 3°, 5°, or 7° of valgus. Ensure the "Left" side of the bushing is superior for a left knee and the "Right" side is superior for a right knee. Slide the valgus alignment bushing down the IM rod until the distal resection paddle rests against the unresected prominent distal condyle. Although rotation is not critical at this step, the distal resection paddle features two lines which may be aligned with the epicondyles. | B in FIGURE 3 Lock the valgus alignment bushing to the rod by turning the knurled knob until it is tight. The knurled knob is highly geared. Only 1/4 turn allows to lock the jig rod. | C in FIGURE 3.

Pin the block to the anterior cortex with two headless pins through the "Std" holes. Additional fixation pins may be added through the divergent holes. | D in FIGURE 4 Slide left the locking button to detach the resection block and remove the IM rod, distal resection paddle and valgus bushing.

Surgical Technique

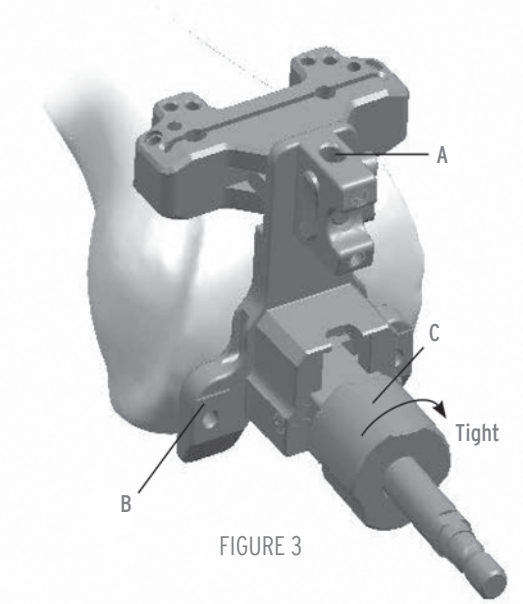

FIGURE 3

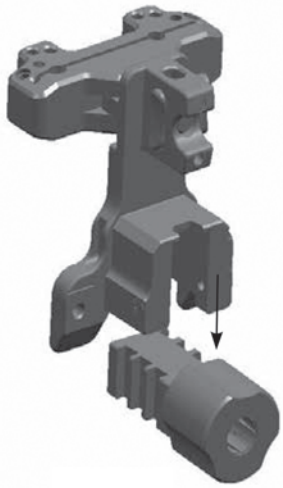
FIGURE 4

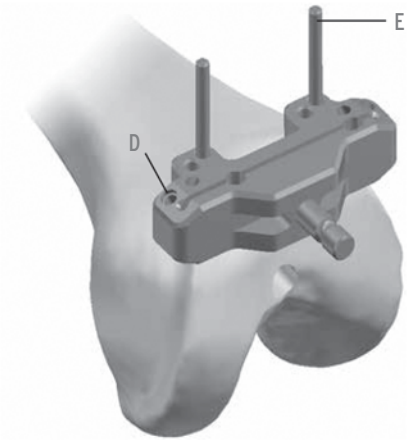

FIGURE 5

Related Instruments:

9.5mm (3/8") Diameter Dril Bit

T-handle Reamer

IM Reamer Rod

Distal Resection Block

Distal Resection Paddle and Valgus Bushing

Headless Pin

Re-cutting the Distal Femur

Insert the fluted IM reamer/rod into the femoral canal with the help of the T-handle . Load a distal resection block (available in 9mm, 11mm and 13mm onto the distal resection paddle and lock them together. Insert the distal resection paddle onto the valgus bushing.Slide the 7mm distal spacer against the interior face of the distal resection paddle until it clicks. | A in When utilized, the distal spacer will reduce the distal resection made by 7mm. (For example, it will allow a 2mm distal resection when used with the 9mm distal resection guide.) Slide the reamer into the intramedullary canal until the distal spacer contacts the distal femur. Pin the resection block in place with two headless pins . Slide left the locking mechanism to detach the resection block and remove the IM rod, distal resection paddle and valgus bushing. Perform the distal re-cut.

2. Femoral Sizing and Rotation

NOTE: The caliper must be set for the appropriate knee. For example: If used on a right knee, the "Right" marking must be facing the observer and the "Left" marking should be against the bone. To set the caliper for the opposite knee, remove the posterior feet, rotate the caliper and reinsert the feet.

Place the sizing caliper flush against the resected distal femur. Adjust the sizer so the posterior feet rest against the posterior condyles. The stylus should be pushed proximally until it "clicks". Each click represents one femoral size. The stylus should be pushed until the number of clicks equals the suspected femoral size.

The stylus size markings are read at the point where the stylus enters the back of the stylus holder. | A in FIGURE 6. The tip of the stylus should touch the most prominent aspect of the anterior cortex just proximal to the lateral anterior condyle. While performing this check, pay attention to not push on the caliper.

The femoral size is read through the windows in the anterior face of the sizing caliper. The resection block preparation holes are drilled through the 3° holes with the 3.2 mm (1/8") drill bit which features a collar at the correct depth. | FIGURE 7 This sets 3° of external rotation relative to the posterior condylar axis.

In the severe varus or valgus knee, the posterior condylar axis may not be a reliable reference for femoral rotation. Instead rotation may be set visually referencing the epicondylar line. If rotation must be set visually, the caliper features a central window with crosshairs. Remove the posterior feet and, with the caliper resting on the distal resection, the crosshair window should be aligned to the epicondylar line. | FIGURE 8 Once aligned, the peg holes are drilled through the 0° holes. Once holes are drilled, remove the sizing caliper and stylus assembly.

Precision Pointer

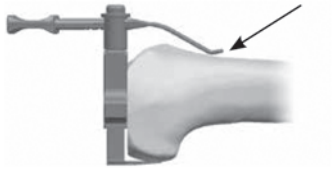

Make sure the caliper rests flat on the distal surface

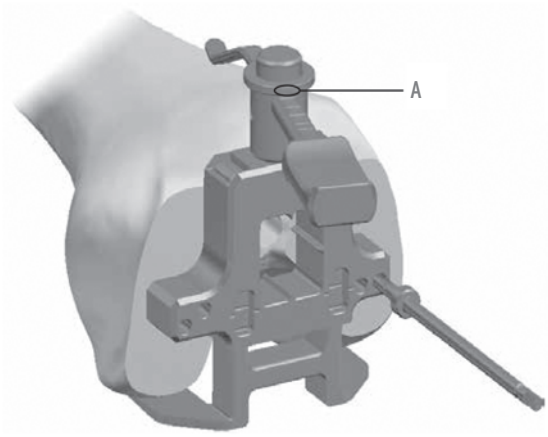

FIGURE 6

FIGURE 7

FIGURE 8

Related Instruments:

Sizing Caliper

3.2mm (1.8") Dril Bit

Sizing Stylus

3. Anterior and Posterior Resections

NOTE: Take care to protect the collateral ligaments during resections.

Select the femoral resection block corresponding to the size indicated by the sizing caliper . If the femoral size is found to be between sizes, the bigger size should be utilized, since this choice will not jeopardize the option of downsizing . Place the pegs on the back of the femoral resection block into the holes drilled through the sizing caliper.

The femoral resection blocks may be used to double-check the femoral size. The distance between the pin outriggers on the sides of the block is the same width as the corresponding femoral component. | FIGURE 9 To confirm A/P size, an 8mm posterior resection gauge is available. It has the same thickness as the posterior condyles of sizes 1 through 5. When placed in the posterior slot of the resection block it is possible to determine if the proper amount of posterior condyle will be resected. | FIGURE 9 To check the risk of anterior notching the dual reference gauge should always be used. If it appears too much or too little of the posterior condyles are being removed or there will be anterior notching, a 2mm re-drill guide is available. | FIGURE 10 This allows the block peg holes to be re-drilled 2mm above or below the existing holes. To utilize the guide, remove the femoral resection block and place the re-drill guide in the existing holes. While maintaining pressure on the guide, re-drill through the appropriate holes and re-insert the femoral resection block in the new drilled holes. These holes do not have to be in the same location as the final implant pegs, which will be prepared with the femoral trials.

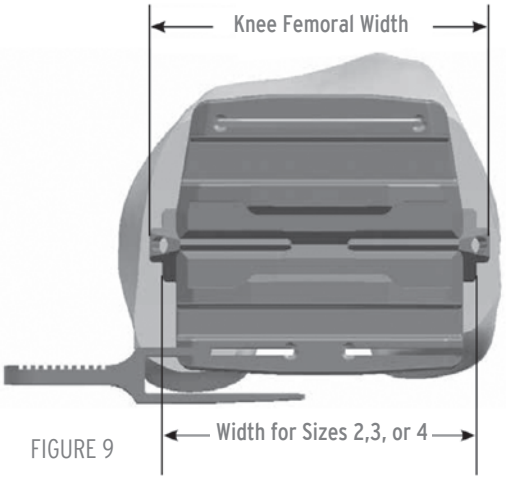

FIGURE 9

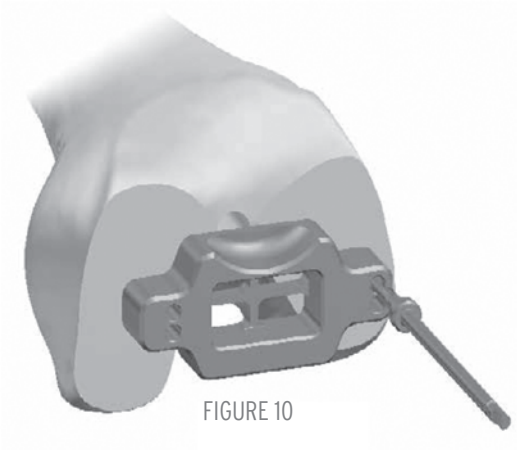

FIGURE 10

Stabilize the resection block against the bone using 3.2mm (1/8") diameter pins on the medial and lateral sides of the block. The tightening of the pins should be completed by using the T-handle in combination with the threaded pin driver.

The resection is then performed in this recommended order: anterior cut (1), then the posterior cut (2) followed by the posterior chamfer (3) and ending with the anterior chamfer (4). | FIGURE 11

NOTE: A narrow saw blade must be used for the chamfer resections.

After resections have been made, the pins are withdrawn. Assemble the resection block/femoral trial extractor on the slaphammer and slide it on the resection block for extraction. | FIGURE 12

Surgical Technique

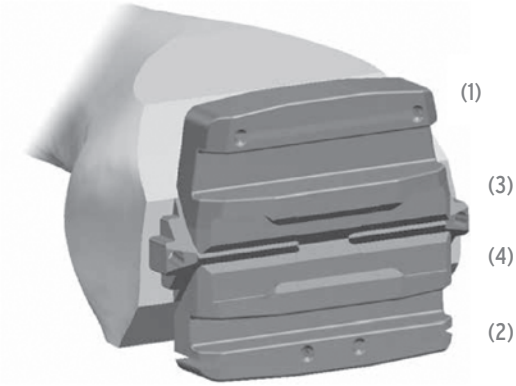

FIGURE 11

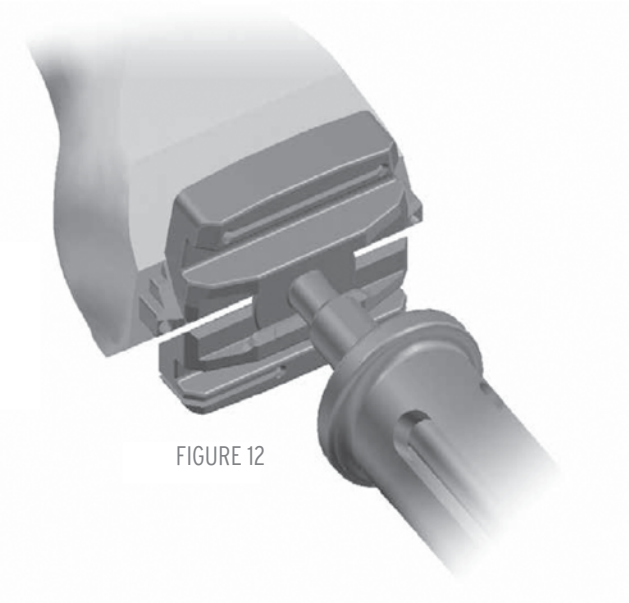

FIGURE 12

Related Instruments:

Femoral Resection Block

Dual Reference Gauge

Resection Gauge

2mm Re-drill guide

Threaded Pin Driver

T-handle Reamer

Slaphammer

3.2mm (1/8") Diameter Pins)

Resection Block/Femoral Trial Extractor

In case it is determined a femoral downsizing is necessary for a proper balancing, position on existing holes a smaller femoral resection block than the one previously used.

SUPERICA femoral components are designed to maintain a common distance from stabilizer pegs to the anterior flange resection. Therefore you don't have to re-cut through the anterior slot.

Stabilize the resection block against the bone using 3.2mm (1/8") diameter pins on the medial and lateral sides of the block. Proceed with the resection of the posterior cut, followed by the posterior and anterior chamfer, as described in the "Anterior and Posterior Resections" chapter. |

4. Trochlear Groove Resection

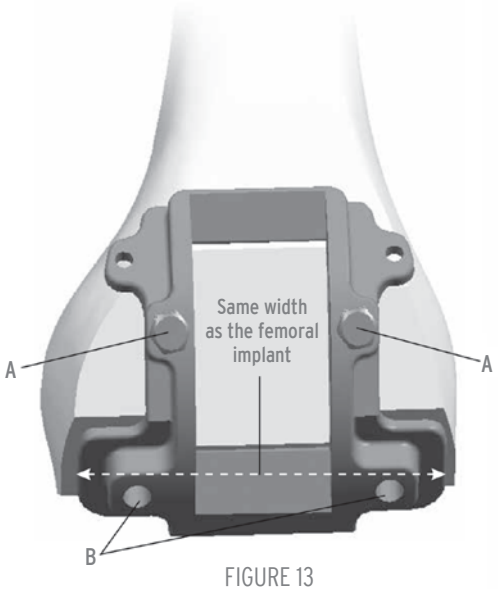

FIGURE 13

Select the trochlear groove resection block corresponding to the size indicated by the sizing caliper. Place the trochlear groove resection block on the femur. | FIGURE 13 The width of the block is the same M/L width as the femoral implant and dictates the final implant location. If the trochlear groove resection block is indicating an overhanging, you'll need to switch to the corresponding SUPERICA notch block specific trochlear groove resection block. | FIGURE 14

Some surgeons place the guide along the lateral edge of the femur to reproduce the natural Q-angle. Stabilize the trochlear groove resection block against the bone using 3.2mm (1/8") pins before resection. | A in FIGURE 14 The trochlear groove should be resected by using a 12.7mm (1/2") sawblade on the angled surface and along the sides of the central portion of the block. If your flexion/extension balance is correct, you can proceed with the preparation of the peg holes for the femoral implant. Using the 4.8mm (3/16") drill bits drill through the distal holes of the trochlear groove resection block. B in | FIGURE 14

NOTE: The peg holes for the implant can also be prepared during the femoral trialing step. If the flexion/extension balance has not been properly achieved at this stage and a femoral re-cut is necessary, the femoral resection block cannot be re-mounted onto the femur due to the 3.2 mm (1/8") pegs on the back of the blocks once the 4.8mm (3/16") peg holes have been drilled.

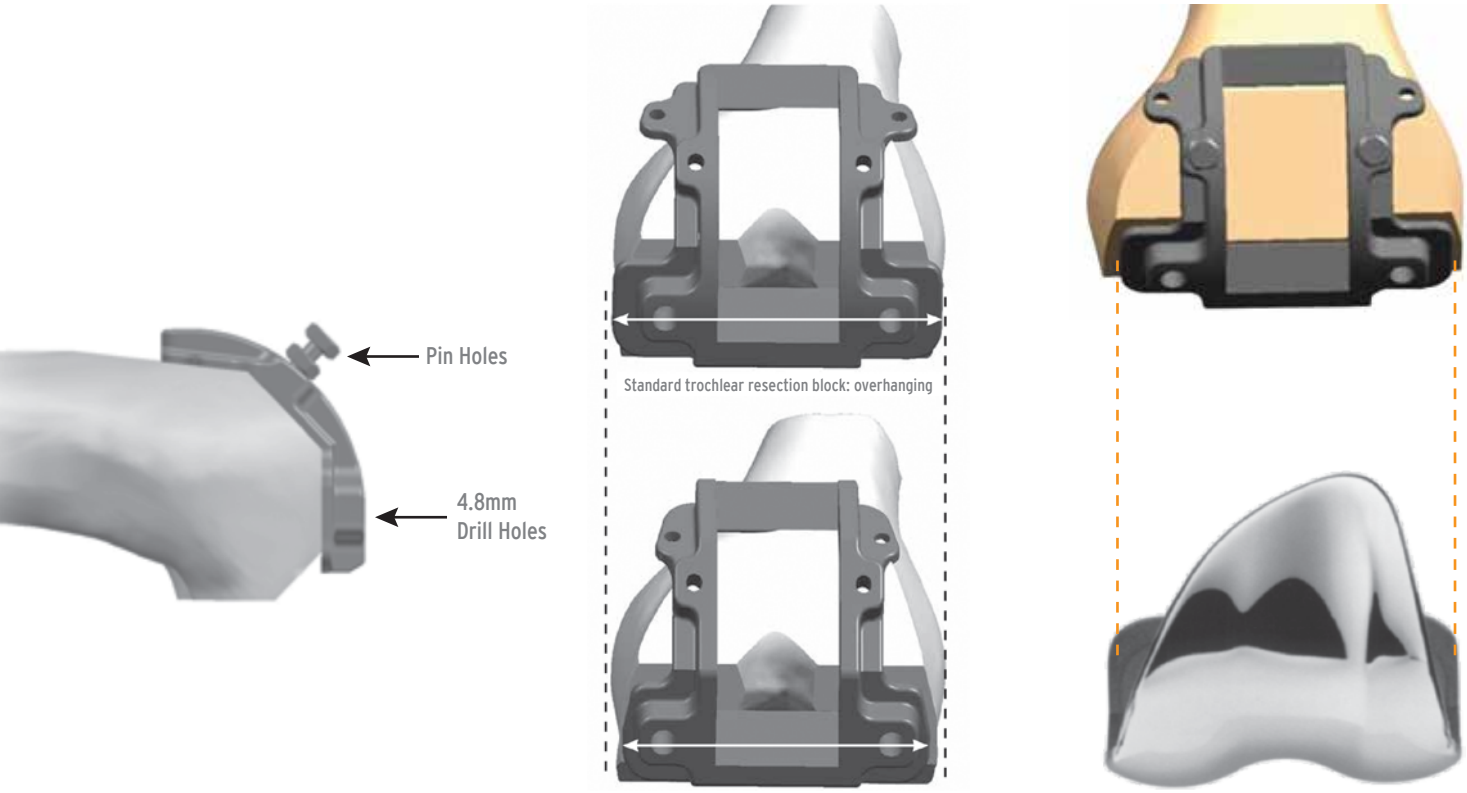

FIGURE 14

Related Instruments:

Trochlear Groove Resection Block

3.2mm (1/8") Diameter Pins

4.8mm (3/16") Drill Bit

Surgical Technique

FIGURE 15

Extramedullary Tibial Resection

Position the ankle clamp of the extramedullary (EM) tibial resection guide against the lower leg just proximal to the malleoli. | FIGURE 15 In case a more stable initial fixation is required, the EM tibial resection guide can be assembled using the spiked component . Slide the appropriate left or right tibial resection guide onto the guide and adjust the guide until the resection slot is located a few millimeters below the lowest articular surface. | FIGURE 15 When the vertical axis of the guide is parallel to the mechanical tibial axis, it is positioned for a 3° posterior sloped resection. Attach the external alignment guide and slide the alignment rod through the appropriate TL or TR (Tibia Left or Tibia Right) hole. If the rod is parallel to the tibia, 3° slope is confirmed. | FIGURE 16

Drop the 2mm/10mm stylus into one of the holes on the resection guide and turn the resection guide adjustment knob | A in FIGURE 16 until the proper resection is found. | FIGURE 16 Generally the stylus is set to resect 2mm from the most deficient side and/or 10mm from the most prominent. Pin the resection guide to the proximal tibia through the "std" holes. The alignment guide and rod can be used to check alignment to the ankle. If the resection guide is detached, it can be moved distally 2mm if headless pins are used. Use of a divergent pin is recommended to prevent the resection block from vibrating off the pins during resections. | B in FIGURE 16

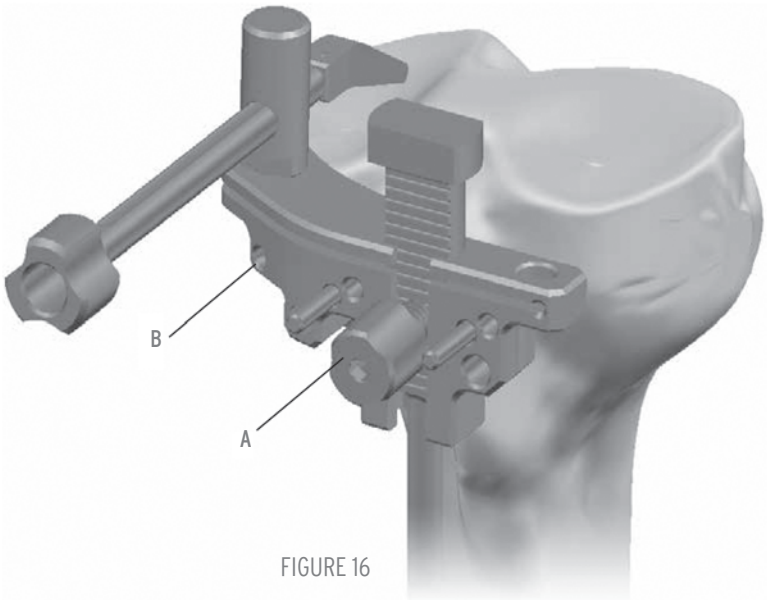

FIGURE 16

The correct height of the cut is determined based on preoperative x-ray templating and intraoperative status of the ligaments. A stylus is also available to help in determining the resection level. Drop the stylus into the resection guide hole: the stylus is set to resect 2mm from the most deficient side when it is positioned with the 0mm arm towards the tibial plateaux. It also features a 10mm arm which can be used to check the most prominent side. | FIGURE 17

Set the guide to the 0mm position to start. The height of the cut can be further fine tuned by turning the proximal knob of the guide. | A in FIGURE 18 By rotating the knob clockwise, the guide moves down.

For a proper stabilization of the guide, the spiked fixator can also be used. | FIGURE 19

FIGURE 17

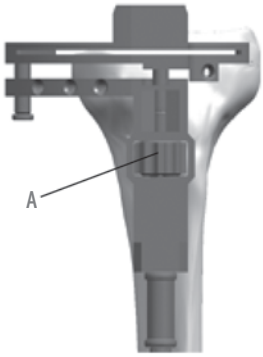

FIGURE 18

FIGURE 19

Intramedullary Tibial Resection (Optional)

The 9.5mm (3/8") drill bit is used to penetrate the proximal tibia just posterior to the tibial ACL footprint. Insert the fluted IM reamer/rod into the tibial canal with the help of the T-handle. | FIGURE 20 Irrigate and aspirate several times to reduce the chance of a fat embolus. The reamer/ rod should be inserted to at least the mid isthmus. Slide the tibial alignment guide onto the IM reamer/rod and insert the appropriate tibial resection guide. | FIGURE 21 Turn the locking screw to lock the guide to the IM reamer/rod. | A in FIGURE 21 Use of a divergent pin is recommended to prevent the resection block from vibrating off the pins during resections. | B in FIGURE 21

FIGURE 20

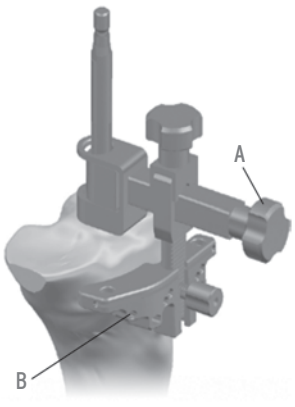

FIGURE 21

Drop the 2mm/10mm stylus into one of the holes on the resection guide to set the desired level of tibial resection. | A in FIGURE 22 Generally the stylus is set to resect 2mm from the most deficient side and/or 10mm from the most prominent. Pin the resection guide to the proximal tibia through the "std" holes. Before inserting a divergent pin, loosen the A/P adjustment knob and move the resection guide as close as possible to the tibia. | B in FIGURE 22 To detach the guide, loosen the resection guide knob | C in FIGURE 22 and extract the IM reamer/rod and alignment guide together. When the resection guide is detached from the guide, the block can be moved 2 mm distally if headless pins are used. Varus/valgus angulation can be checked to the ankle using the external alignment guide and rod . | FIGURE 23

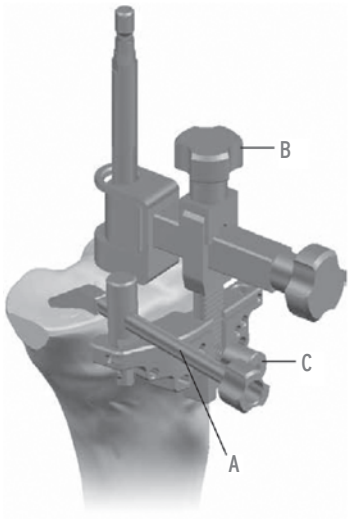

FIGURE 22

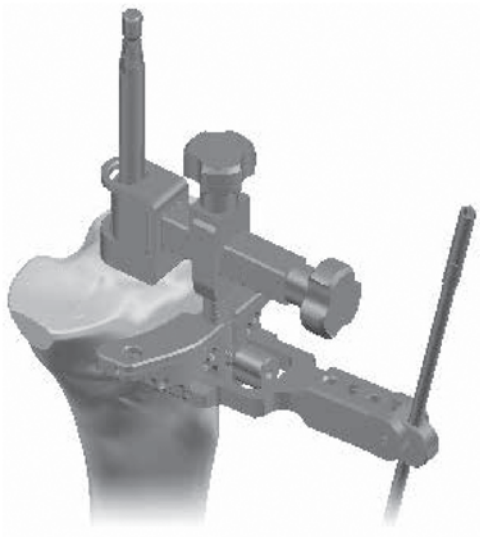

FIGURE 23

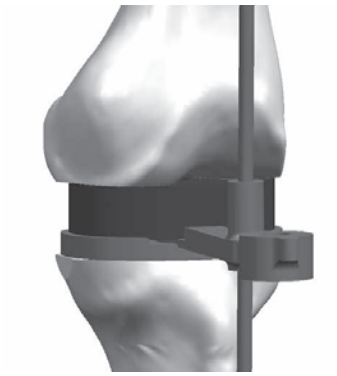

FIGURE 24

Extension Gap Measurement

The extension gaps are measured following the tibial and the distal femoral resections. Select the appropriate tibial base and mount it on the tibial base handle . With the knee fully extended, insert the 10mm spacer block into the space between the femur and tibia. If the spacer block does not fit in extension additional bone resection might be required . Use progressively thicker spacer blocks until the appropriate tension is obtained. Slide the external alignment rod through the hole to check alignment. FIGURE 24 If the 10mm spacer block does not fit, use the minus 2mm spacer block to determine the amount of additional bone resection required to achieve full extension.

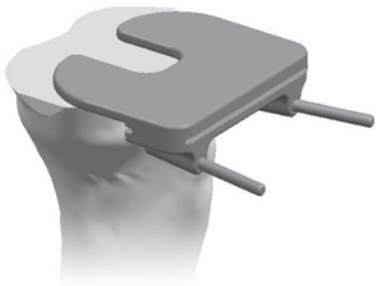

FIGURE 25

2mm Resection Guide

The 2mm resection guide is generally employed for use on the distal femoral and proximal tibial resections. To position the guide, place the anterior wings on the resected surface with the resection slot abutting the edge of the surface. | FIGURE 25 Two divergent pin holes are available for fixation.

6. Tibial Sizing and Trial Reduction

Care should be taken to ensure the tibial plateau is completely flat after the resection is made. A tibial base trial can be used to check the flatness of the surface.

NOTE: In all SUPERICA Total Knee Inserts, the tibial insert size must match the femoral implant size. There are two tibial base sizes that can be used with any one size femoral component. For example a size 3 femoral implant can be used with either a size 3 or 3+ tibial base. |table 1

FIGURE 26

Femur	Insert	Tibia
1	1	1 or 1+
2	2	2 or 2+
3	3	3 or 3+
4	4	4 or 4+
5	5	5 or 5+

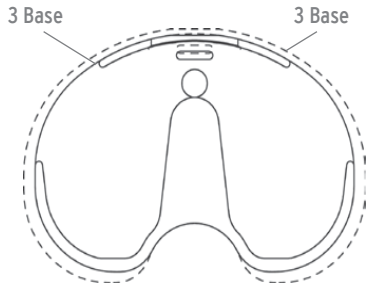

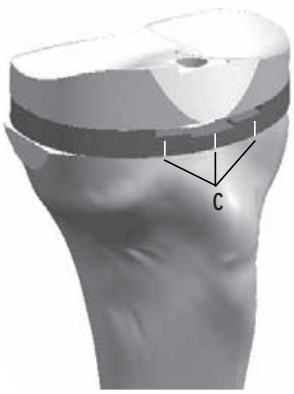

FIGURE 27

Assemble the appropriate trial tibial base to the trial base handle . The trial base is then placed onto the resected surface of the tibia and properly aligned (generally to the medial onethird of the tibial tubercle) to check overall coverage. If the tibial trial base size is too small, a "plus size" will provide additional tibial coverage. Place the appropriate size femoral trial on the distal femur using the femoral holder/driver . Insert the trial insert of appropriate size and thickness onto the trial base . If not done during the patella preparation, prepare the patellar peg holes, as described in the Patella Preparation chapter. Place the selected trial patella in place and complete the trial reduction. With the trial implants in place, perform an evaluation of the full range of motion to determine the final implant position. | FIGURE 26 If the final implant position is decided, the lines on the anterior portion of the tibial base can be used for marking the tibia to aid with alignment of the tibial base component during final implantation. | C in FIGURE 27

Reposition the tibial base trial and pin it to the tibia using short head anchoring pins through the anterolateral and posteromedial holes. | A in FIGURE 28 The alignment rod can be inserted through the handle to check alignment to the ankle. | B in FIGURE 28

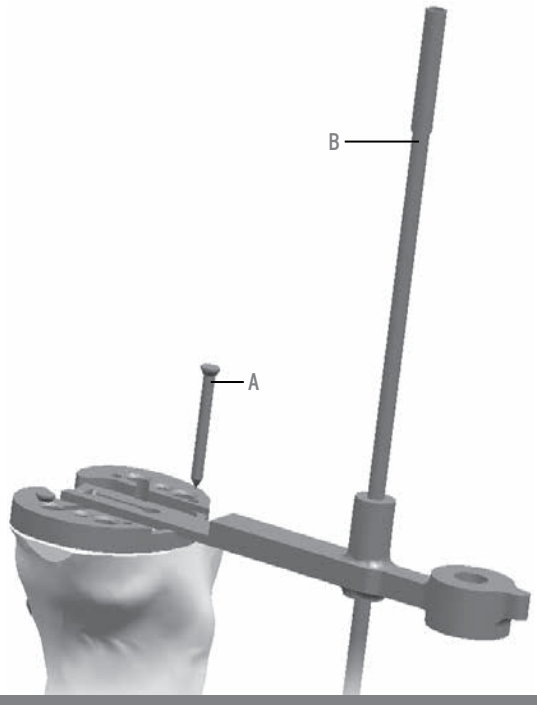

FIGURE 28

Table 2 | Instrument Sizing Matrix

Tibial Base Trial	Reamer	Keel Punches
Size 1	Line 1	Size 1/1+/2
Size 1+/2	Line 1	Size 1/1+/2
Size 2+/3	Line 2	Size 2+/3/3+/4
Size 3+/4	Line 2	Size 2+/3/3+/4
Size 4+/5	Line 3	Size 4+/5/5+
Size 5+	Line 3	Size 4+/5/5+

Table 2 should be used to determine the sizing compatibility of the instrumentation.

Attach the keel punch guide to the keel punch handle and secure it to the trial base by turning the knurled handle. | FIGURE 29 Using the threaded punch handle and appropriate press fit keel punch, plunge through the guide until the punch is fully seated and the punch collar is level with the edge of the guide. | A in FIGURE 30

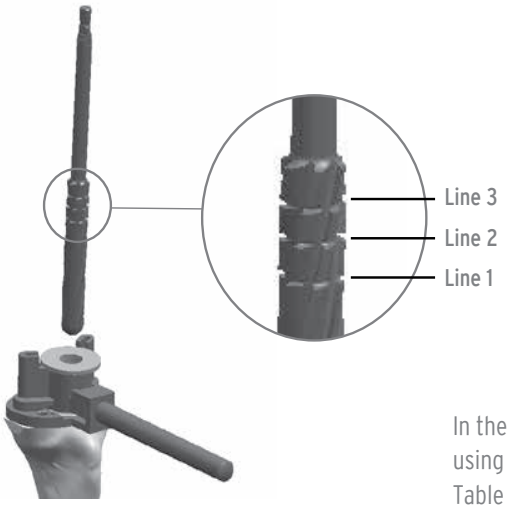

FIGURE 31

FIGURE 29

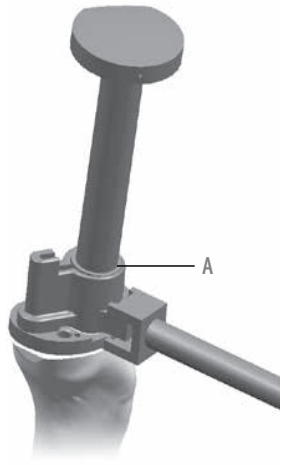

FIGURE 30

In the event of hard tibial bone, before punching, prepare the entry hole for the tibial stem using the 15 mm drill guide and the press fit reamer. | FIGURE 31 Referring to | FIGURE 31 and Table 2, ream through the drill guide to the appropriate line indicated on the reamer.

Related Instruments:

EM Tibial Resection Guide

Spiked Component

Tibial Resection Guide

External Alignment Guide

Dual Reference Gauge

Alignment Rod

Stylus

Spiked Fixator

2mm/10mm Stylus

Keel Punch Guide

Keel Punch Handle

Press Fit Keel Punch

Minus 2mm Spacer Block

10mm Spacer Block

Spacer blocks (12mm - 25mm)

Tibial Base

Tibial Base Handle

Alignment Rod

7. Implants Insertion

Tibial Base Insertion

The tibial bone bed is cleaned and bone cement is prepared and introduced according to standard recommendations. The inserter/extractor is utilized to implant the base by engaging the insert locking dovetail and impacting with a mallet until fully seated on bone. The monolithic tibial impactor can also be used to seat the tibial base. FIGURE 32

Optional: After the base has been inserted, the appropriate trial tibial insert can be used to recheck ligament and soft tissue balancing. | FIGURE 33 An additional trial insert pin may be placed through the trial insert into tibial base implant to provide a more secure construct during final assessment of joint stability. | A in FIGURE 33

NOTE: The trial insert only engages the central locking detail and a gap will be Present along the anterior periphery of the insert. | B in FIGURE 33

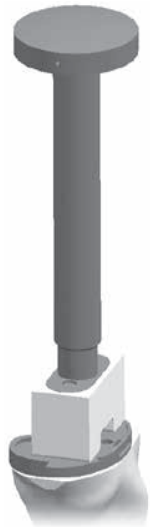

FIGURE 32

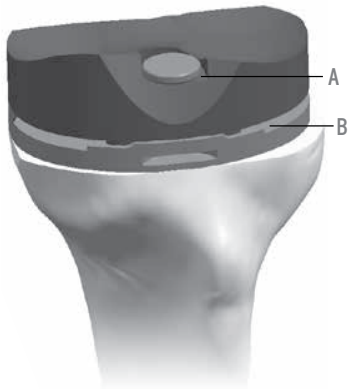

FIGURE 33

Tibial Insert Insertion

Initial seating is accomplished by pushing the insert as far posterior as possible with hand pressure, paying special attention to engage the central dovetail and posterior captures of the tibial base. For final seating of the insert, two options are available. The 45° insert impactor may be utilized by placing the impactor tip in the anterior slot of the tibial insert. | FIGURES 34-35 and 38 The impactor handle should be at an angle slightly greater than 45°. Keeping the impactor tip in the slot, decrease the angle of the impactor handle until the tip is felt to impinge within the slot. This should be approximately 45°. While maintaining this 45° angle relative to the tibial base, apply several strong mallet blows directing the insert posteriorly. After the anterior edge of the insert has been pushed past the anterior capture of the tibial base, it will automatically drop behind the anterior capture and the insert face will be flush against the surface of the tibial base. | FIGURE 36

FIGURE 34

FIGURE 35

FIGURE 36

Femoral Component Insertion

The femoral bone bed is cleaned and bone cement is prepared and introduced according to standard recommendations. The femoral impactor is utilized for final seating of the femoral component. | FIGURE 37

FIGURE 37

Patella Option

NOTE: Instead of utilizing a clamp for patellar resection some surgeons prefer a non-instrumented technique.

With the leg extended, the patella is tilted to almost a 90° angle. The thickness of the patella is measured with the patella sizing caliper. The 8mm resection depth gauge is attached to the top of the resection guide with the lock screw. | A in FIGURE 38 Position the resection guide jaws parallel to the articular margin and securely clamp the guide to the bone; ensuring the gauge is contacting the apex of the articular surface. Remove the gauge and locking screw and make the patellar resection. The amount of bone to be resected is determined by trying to replicate with the patellar implant the thickness of the original patella and leaving at least 12mm of bone. | FIGURE 39

NOTE: The patellar peg holes may also be prepared after the tibial and femoral resections.

After having removed the resection guide, attach the appropriate drill guide to the patellar clamp . | A in FIGURE 40 The drill guides have grooves on their surfaces indicating the patellar diameter options. The appropriate tri-peg or central peg reamer is used to prepare the peg hole(s).

NOTE: The tri-peg patellae have the same peg patterns between sizes and can be easily changed during trial reduction.

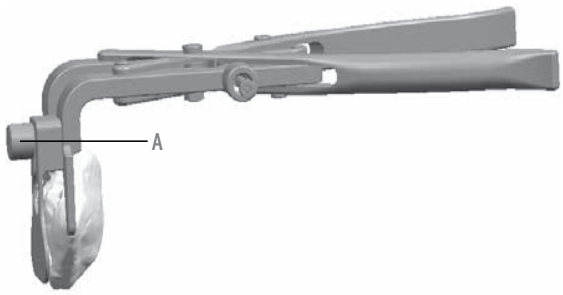

FIGURE 38

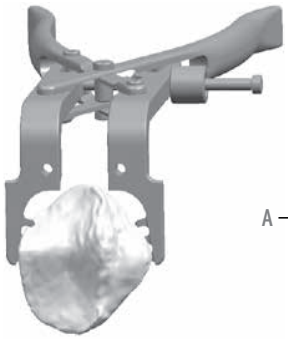

FIGURE 39

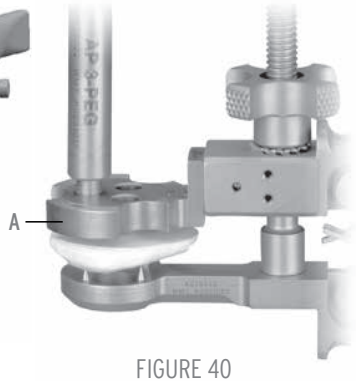

FIGURE 40

Related Instruments:

Femoral Impactor

Trial Insert

Trial Insert Pin

Inserter/Extractor

Tibial Impactor

Resection Depth Gauge

Resection Guide

Tri-peg Drill Guide

Central Peg Drill Guide

Patellar Clamp

Tri-peg Reamer

Central Peg Reamer

Postoperative Management

Postoperative care is the responsibility of the medical professional.

Technique Overview

1. Distal Femur Preparation

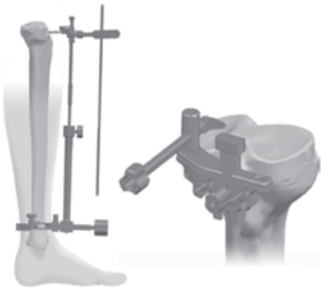

2a. Extramedullary Tibial Preparation

2b. Intramedullary Tibial Preparation

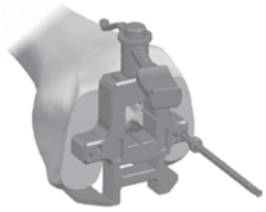

3. Femoral Sizing

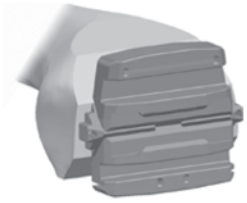

4. Femoral Resections

5. Flexion Gap Measurement

6. Trochlear Groove Resection

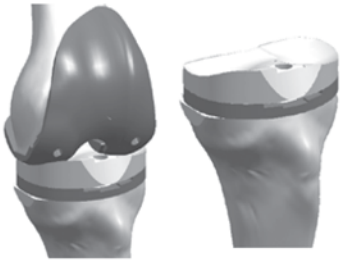

7. Tibial Sizing and Trial Reduction

8. Femoral Preparation

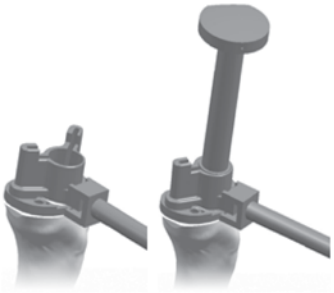

9. Keel Preparation

10. Tibial Base Insertion

11. Tibial Insert Insertion

12. Femoral Component Insertion

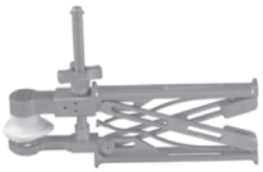

13. Patella Component Insertion

Ordering Information

Superica Cemented Femoral Components

Code	Size
65.5001	Left Size 1
65.5002	Left Size 2
65.5003	Left Size 3
65.5004	Left Size 4
65.5005	Left Size 5
65.5101	Right Size 1
65.5102	Right Size 2
65.5103	Right Size 3
65.5104	Right Size 4
65.5105	Right Size 5

Lot 13

Superica Tibial Components (CoCr)

Code	Size
65.5201	Size 1
65.5202	Size 2
65.5203	Size 3
65.5204	Size 4
65.5205	Size 5
65.5301	Size 1 Plus
65.5302	Size 2 Plus
65.5303	Size 3 Plus
65.5304	Size 4 Plus
65.5305	Size 5 Plus

Ordering Information

Superica Tibial Inserts

Code	Size
65.5010	Left 10mm Size1
65.5012	Left 12mm Size1
65.5014	Left 14mm Ölçü1
65.5017	Left 17mm Size1
65.5020	Left 20mm Size1
65.5025	Left 25mm Size1
65.5210	Left 10mm Size2
65.5212	Left 12mm Size2
65.5214	Left 14mm Size2
65.5217	Left 17mm Size2
65.5220	Left 20mm Size2
65.5225	Left 25mm Size2
65.5410	Left 10mm Size3
65.5412	Left 12mm Size3
65.5414	Left 14mm Size3
65.5417	Left 17mm Size3
65.5420	Left 20mm Size3
65.5425	Left 25mm Size3
65.5610	Left 10mm Size4
65.5612	Left 12mm Size4
65.5614	Left 14mm Size4
65.5617	Left 17mm Size4
65.5620	Left 20mm Size4
65.5625	Left 25mm Size4
65.5810	Left 10mm Size5
65.5812	Left 12mm Size5
65.5814	Left 14mm Size5
65.5817	Left 17mm Size5
65.5820	Left 20mm Size5
65.5825	Left 25mm Size5
65.5110	Right 10mm Size1
65.5112	Right 12mm Size1
65.5114	Right 14mm Size1
65.5117	Right 17mm Size1
65.5120	Right 20mm Size1
65.5125	Right 25mm Size1
65.5310	Right 10mm Size2
65.5312	Right 12mm Size2
65.5314	Right 14mm Size2
65.5317	Right 17mm Size2
65.5320	Right 20mm Size2
65.5325	Right 25mm Size2
65.5510	Right 10mm Size3
65.5512	Right 12mm Size3
65.5514	Right 14mm Size3
65.5517	Right 17mm Size3
65.5520	Right 20mm Size3
65.5525	Right 25mm Size3
65.5710	Right 10mm Size4
65.5712	Right 12mm Size4
65.5714	Right 14mm Size4
65.5717	Right 17mm Size4
65.5720	Right 20mm Size4
65.5725	Right 25mm Size4
65.5910	Right 10mm Size5
65.5912	Right 12mm Size5
65.5914	Right14mm Size5
65.5917	Right 17mm Size5
65.5920	Right 20mm Size5
65.5925	Right 25mm Size5

Ordering Information

Superica Xluhmwpe Inserts

Code	Size
65.7010	Left 10mm Size1
65.7012	Left 12mm Size1
65.7014	Left 14mm Size1
65.7017	Left 17mm Size1
65.7020	Left 20mm Size1
65.7025	Left 25mm Size1
65.7210	Left 10mm Size2
65.7212	Left 12mm Size2
65.7214	Left 14mm Size2
65.7217	Left 17mm Size2
65.7220	Left 20mm Size2
65.7225	Left 25mm Size2
65.7410	Left 10mm Size3
65.7412	Left 12mm Size3
65.7414	Left 14mm Size3
65.7417	Left 17mm Size3
65.7420	Left 20mm Size3
65.7425	Left 25mm Size3
65.7610	Left 10mm Size4
65.7612	Left 12mm Size4
65.7614	Left 14mm Size4
65.7617	Left 17mm Size4
65.7620	Left 20mm Size4
65.7625	Left 25mm Size4
65.7810	Left 10mm Size5
65.7812	Left 12mm Size5
65.7814	Left 14mm Size5
65.7817	Left 17mm Size5
65.7820	Left 20mm Size5
65.7825	Left 25mm Size5
65.7110	Right 10mm Size1
65.7112	Right 12mm Size1
65.7114	Right 14mm Size1
65.7117	Right 17mm Size1
65.7120	Right 20mm Size1
65.7125	Right 25mm Size1
65.7310	Right 10mm Size2
65.7312	Right 12mm Size2
65.7314	Right 14mm Size2
65.7317	Right 17mm Size2
65.7320	Right 20mm Size2
65.7325	Right 25mm Size2
65.7510	Right 10mm Size3
65.7512	Right 12mm Size3
65.7514	Right 14mm Size3
65.7517	Right 17mm Size3
65.7520	Right 20mm Size3
65.7525	Right 25mm Size3
65.7710	Right 10mm Size4
65.7712	Right 12mm Size4
65.7714	Right 14mm Size4
65.7717	Right 17mm Size4
65.7720	Right 20mm Size4
65.7725	Right 25mm Size4
65.7910	Right 10mm Size5
65.7912	Right 12mm Size5
65.7914	Right 14mm Size5
65.7917	Right 17mm Size5
65.7920	Right 20mm Size5
65.7925	Right 25mm Size5

Ordering Information

Superica Patellar Component

Code	Size
65.5426	26mm
65.5429	29mm
65.5432	32mm
65.5435	35mm

Ordering Information

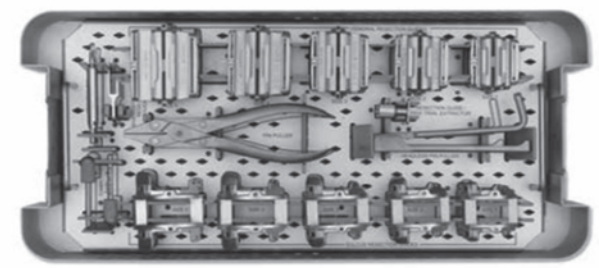

Code	Size
99.3148	**Superica Femoral Cutter Guide Tray**
99.3000	Superica Femoral Cutter Guide Size-1
99.3001	Superica Femoral Cutter Guide Size-2
99.3002	Superica Femoral Cutter Guide Size-3
99.3003	Superica Femoral Cutter Guide Size-4
99.3004	Superica Femoral Cutter Guide Size-5
99.3005	Trial Femur Extractor
99.3006	Headless Pin Puller
99.3007	8 mm Gauge For 4 in 1 Resection Guide
99.3008	Ø4.8 mm Femoral Peg Drill
99.3009	Superica Notch Block Size-1
99.3010	Superica Notch Block Size-2
99.3011	Superica Notch Block Size-3
99.3012	Superica Notch Block Size-4
99.3013	Superica Notch Block Size-5
99.3014	Knee Impactor/extractor

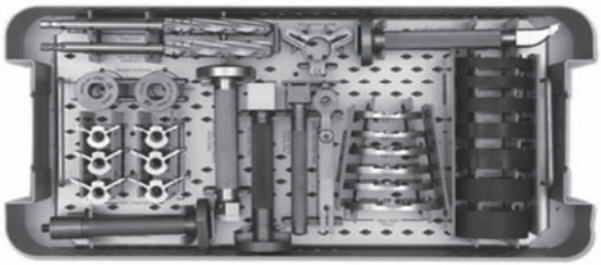

Code	Size
99.3149	**Superica Tibial Guide Tray-1**
99.3015	Flexion Extension Gaps -2 mm
99.3016	Flexion Extension Gaps 10 mm
99.3017	Flexion Extension Gaps 12 mm
99.3018	Flexion Extension Gaps 14 mm
99.3019	Flexion Extension Gaps 17 mm
99.3020	Flexion Extension Gaps 20 mm
99.3021	Flexion Extension Gaps 25 mm
99.3022	Tibial Base Plate Size 1
99.3023	Tibial Base Plate Size 2/1+
99.3024	Tibial Base Plate Size 3/2+
99.3025	Tibial Base Plate Size 4/3+
99.3026	Tibial Base Plate Size 5/4+
99.3027	Tibial Base Plate Size 6/5+
99.3028	Tibial Base Plate Handle
99.3029	Keel Punch Guide Handle
99.3030	Tibial Impactor
99.3031	Tibia Base Extractor/impactor
99.3032	Keel Punch Handle
99.3033	Pressfit Keel Punch Size 1, 1+, 2
99.3034	Pressfit Keel Punch Size 2+, 3, 3+, 4
99.3035	Pressfit Keel Punch Size 4+, 5, 5+, 6
99.3036	Oversize Keel Punch Size 1, 1+, 2
99.3037	Oversize Keel Punch Size 2+, 3, 3+, 4
99.3038	Oversize Keel Punch Size 4+, 5, 5+, 6
99.3039	Oversize Tibial Drill Sleeve
99.3040	Pressfit Tibial Drill Sleeve
99.3041	Pressfit Tibial Drill
99.3042	Oversize Tibial Drill
99.3043	Keel Punch Guide
99.3044	Insert Impactor

Ordering Information

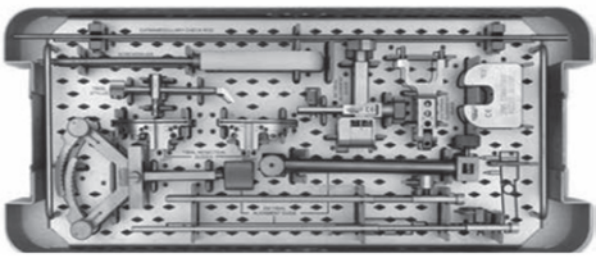

Code	Size
99.3150	Superica Tibial Guide Tray-2
99.3045	External Aligment Guide Body
99.3046	External Aligment Guide Extractor
99.3047	Tibial Resection Guide Ankle Clamp
99.3048	Tibial Resection Guide Long Shaft
99.3049	Tibial Resection Guide Body
99.3050	Tibial Resection Guide Short Shaft
99.3051	Tibial Guide Left
99.3052	Tibial Guide Right
99.3053	Im Tibial Aligment Guide Modified
99.3054	External Aligment Guide
99.3055	2 mm Recut Guide
99.3056	Tibial Stylus
99.3057	External Check Rod
99.3058	Screwdriver

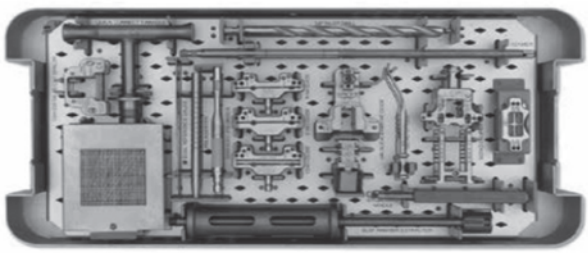

Code	Size
99.3151	**Superica General Tray**
99.3059	3/8" Drill
99.3060	11" Reamer Rod
99.3061	Quick Connect T-handle
99.3062	Valgus Aligment Guide Spacer 7 mm
99.3063	Re-drill Guide
99.3064	Femoral Sizing Caliper / Pin Hole - Handle
99.3065	Femoral Sizing
99.3066	Femoral Stylus
99.3067	Valgus Aligment Guide
99.3068	Valgus Aligment
99.3069	Distal Resection Guide 9 mm
99.3070	Distal Resection Guide 11 mm
99.3071	Distal Resection Guide 9 mm - 13 mm
99.3072	Thereaded Pin Driver
99.3073	Pin Inserter
99.3074	Dual Reference Gauge
99.3075	Thereaded Stabilizing
99.3076	Slap Hammer
99.3077	Pin Caddy
99.3078	Tibial Base Fixation Pin With Tapered Head
99.3079	Flat Head Fixation Pin 45mm
99.3080	80 mm Headless Fixation Pin Without Groove
99.3081	125 Quick Disconnect Drill Bit
99.3082	Drill Bits Only
99.3083	Drill Bit 1/8" W/quick Disconnect 100mm
99.3084	1/8" Drill Bit W/ Stop
99.3085	Trial Tibial Insert Pin

Ordering Information

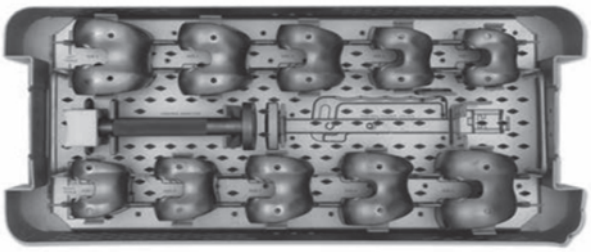

Code	Size
99.3152	**Superica Femoral Trial Tray**
99.3086	Trial Femur Left Size 1
99.3087	Trial Femur Left Size 2
99.3088	Trial Femur Left Size 3
99.3089	Trial Femur Left Size 4
99.3090	Trial Femur Left Size 5
99.3091	Trial Femur Right Size 1
99.3092	Trial Femur Right Size 2
99.3093	Trial Femur Right Size 3
99.3094	Trial Femur Right Size 4
99.3095	Trial Femur Right Size 5
99.3096	Femoral Impactor
99.3148	Femoral Holder Driver

Ordering Information

Code	Size
99.3153	**Superica Left Insert Trials Tray**
99.3097	Trial Insert Left Size 1 10 mm
99.3098	Trial Insert Left Size 1 12 mm
99.3099	Trial Insert Left Size 1 14 mm
99.3100	Trial Insert Left Size 1 17 mm
99.3101	Trial Insert Left Size 2 10 mm
99.3102	Trial Insert Left Size 2 12 mm
99.3103	Trial Insert Left Size 2 14 mm
99.3104	Trial Insert Left Size 2 17 mm
99.3105	Trial Insert Left Size 3 10 mm
99.3106	Trial Insert Left Size 3 12 mm
99.3107	Trial Insert Left Size 3 14 mm
99.3108	Trial Insert Left Size 3 17 mm
99.3109	Trial Insert Left Size 4 10 mm
99.3110	Trial Insert Left Size 4 12 mm
99.3111	Trial Insert Left Size 4 14 mm
99.3112	Trial Insert Left Size 4 17 mm
99.3113	Trial Insert Left Size 5 10 mm
99.3114	Trial Insert Left Size 5 12 mm
99.3115	Trial Insert Left Size 5 14 mm
99.3116	Trial Insert Left Size 5 17 mm

Code	Size
99.3154	**Superica Right Insert Trials Tray**
99.3117	Trial Insert Right Size 1 10 mm
99.3118	Trial Insert Right Size 1 12 mm
99.3119	Trial Insert Right Size 1 14 mm
99.3120	Trial Insert Right Size 1 17 mm
99.3121	Trial Insert Right Size 2 10 mm
99.3122	Trial Insert Right Size 2 12 mm
99.3123	Trial Insert Right Size 2 14 mm
99.3124	Trial Insert Right Size 2 17 mm
99.3125	Trial Insert Right Size 3 10 mm
99.3126	Trial Insert Right Size 3 12 mm
99.3127	Trial Insert Right Size 3 14 mm
99.3128	Trial Insert Right Size 3 17 mm
99.3129	Trial Insert Right Size 4 10 mm
99.3130	Trial Insert Right Size 4 12 mm
99.3131	Trial Insert Right Size 4 14 mm
99.3132	Trial Insert Right Size 4 17 mm
99.3133	Trial Insert Right Size 5 10 mm
99.3134	Trial Insert Right Size 5 12 mm
99.3135	Trial Insert Right Size 5 14 mm
99.3136	Trial Insert Right Size 5 17 mm

Ordering Information

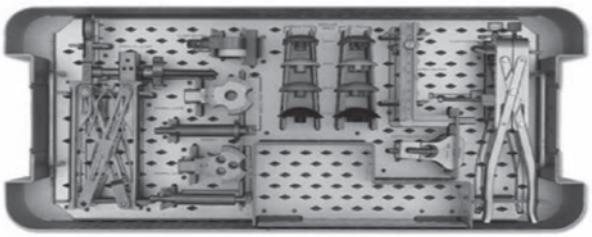

Code	Size
99.3155	**Superica Patella Tray**
99.3137	End Mill Guides Single Post
99.3138	Parallel Clamp
99.3139	Clamp Seater
99.3140	Patella Trial Size 26
99.3141	Patella Trial Size 29
99.3142	Patella Trial Size 32
99.3143	Patella Trial Size 35
99.3144	Depth Gauges
99.3145	Clamp Assembly
99.3146	End Mills - Tri Post
99.3147	Patella Sizing Caliper

Accessories

Centralizer

Size Ref.	Cat. No.	Description	Inner Dia.	Outer Dia.
Universal	1100-C	Centralizer Material: UHMWPE	8	10.5

Restrictor

Lot 4

Size Ref.	Cat. No.	Description	Inner Dia.	Outer Dia.
Universal	1100-P	Restrictor Material: UHMWPE	3	9

AK Knee Joint Spacer Mold

Size Ref.	Cat. No.	Description	Femoral ML (mm)
S	5901-0002	AK Knee Joint Spacer Mold	60
M	5901-0003		65
L	5901-0004		70

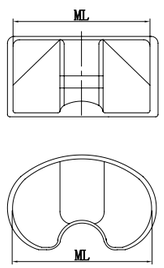

AK Hip Joint Spacer Mold

Size Ref.	Cat. No.	Head Dia. D (mm)	Stem Length L (mm)
44#	5904-0044	44	175
48#	5904-0048	48	202
52#	5904-0052	52	216

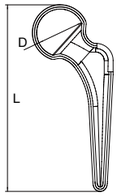

Bone Cement Applicator

Bone cement applicator is the third generation cement technic which is designed to inject cement into intramedullary. This instrument may evenly inject cement into femur during hip joint replacement surgery.

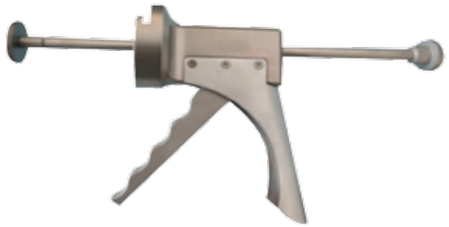

Bone Cement Application Kit

The plastic made cement sleeve assemblies are disposable for keeping bone cement. The system of devices may reduce possibilities of microbial contamination of the bone cement; also reduce the release of monomer vapors into environment; optimize mixing of the cement and make it possible for obtaining high and low viscosity cement.

Tornado Disposable Surgical Lavage Unit

Tornado Disposable Surgical Lavage Unit is a high quality, single use high pressure pulse lavage system for arthroplasty surgery. The product was developed with the specific requirements of surgeons in mind.
Tornado Disposable Surgical Lavage Unit is a ready-to-use product for joint arthroplasty and trauma surgery. The system is pre-packed with irrigation and suction nozzles which are customized for the respective usage area. The purpose is to give the surgeon different options to choose from, depending on what kind of surgery he/she will perform.

Multi-functional system

Multi-function host

Reaming Drill

Bone Drill

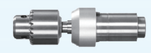

Craniotomy Drill&Mill

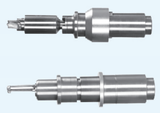

Canulate Drill

Reciprocating Saw & Sternum Saw

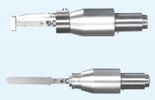

TPLO Saw

Oscillating Saw

K- wire

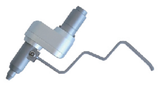

Plaster saw

Accessories

E150 Oscillating Saw

System E

Oscillations(osc/min):0-11000cpm
Swing:≥4.5°
Noise:≤75dB
Sterilization temperature:135℃
Operation(V) voltage:9.6V
Battery Type:Ni-MH Green Battery
Battery capacity:2100mAh

C240 Canulate Drill

System C

Speed :0-1250rpm
Operation(V) voltage:14.4V
Torque:3N-m
Radial circle runout:≤0.10mm
Sterilization temperature:135℃
Axial movement:≤0.5mm
Noise:≤75dB
Battery capacity:2000mAh

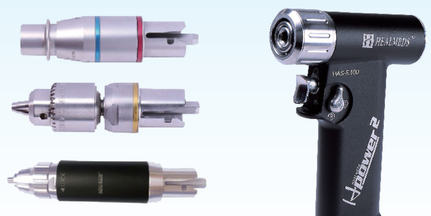

E100 Multi Function Drill

System E

Speed Range(Key Chuck attachment):0-1200rpm
Torque(Key Chuck attachment):3.5N-m
Speed Range(Reaming Attachment):0-400rpm
Torque(Reaming Attachment):10N-m
Operation(V) voltage:9.6V
Battery Volumn:2100mAh
Radial circle run-out:≤0.1mm
Biggest dirll bit diameter:8mm
Axial movement:≤0.5mm
Diameter of Cannulation:6.5mm

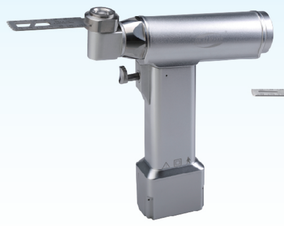

C150 Oscillating Saw

System C

C350 Oscillating Saw

Oscillations(osc/min):0-15000cpm
Sterilization temperature:155℃
Operation(V) voltage:14.4V
Noise:≤75dB
Battery capacity:2000mAh
Battery Type:Ni-MH Green Battery

HEALMEDS SCIENCE AND TECHNOLOGY

Surgical power tools

Address：The Binhai New Area of Tianjin Huayuan Industrial Zone (outer ring) Haitai South Block C No. 28 1–201

Tel：86–22–83750061–610 Mobile：+86–133–5209–7710

Website：www.healmeds.net Website：healmeds.en.alibaba.com

E–mail：haskj_tianxl@163.com

TIANJIN HEALTH SCI-TECH CO.,LTD.

A110 BONE DRILL

System A

Speed:0-1200rpm
Radial circle run-out:≤0.1mm
Torque:2N-m
Axial movement:≤0.5mm
Noise:≤75dB
Battery capacity:1600mAh
Operation(V) voltage:14.4V
Biggest drill bit diameter:8mm

A150 Oscillating Saw

System A

Oscillations(osc/min):0-15000cpm
Autoclavable:135℃
Operation(V) voltage:14.4V
Noise:≤75dB
Battery capacity:1600mAh
Battery Type:Ni-MH Green Battery

B110 Small Bone Drill

Systerm B

No-load speed:0-1200r/min
Chuck gripper diameter:≤4mm
Radial runout:≤0.10mm
Operation(V) voltage:7.2V
Peak torque:2.9N-m
Battery capacity:1400mAh
No-load noise:≤45dB(A)
Battery Type:Ni-MH Green Battery

B100 Small Bone Multi-function Power Tools

Systerm B

No-load speed:0-1200r/min
Chuck gripper diameter:≤4mm
Radial runout:≤0.10mm
Oscillations(osc/min):0-16000com
Peak torque:2.9N-m
Sterilization temperature:155℃
No-load noise:≤45dB(A)
Battery capacity:1400mAh
Noise:≤75dB
Battery Type:Ni-MH Green Battery
Operation(V) voltage:7.2V

A130 Acetabulum Reaming Drill

System A

Speed:0-350rpm
Operation(V) voltage:14.4V
Torque:5 N-m
Radial circle run-out:≤0.1mm
Sterilization temperature:135℃
Axial movement:≤0.5mm
Noise:≤75dB
Battery capacity:1600mAh

A140 A240 Canulate Drill

Speed：0-800rpm
Torque：3N-m

System A

A340 A440 Canulate Drill

Speed：0-1200rpm
Torque：2N-m

Sterilization temperature:135℃
Axial movement:≤0.5mm
Noise:≤75dB
Battery capacity:1600mAh
Operation(V) voltage:14.4V
Biggest drill bit diameter:8mm
Radial circle run-out:≤0.1mm
Diameter of Cannulation:4.5mm

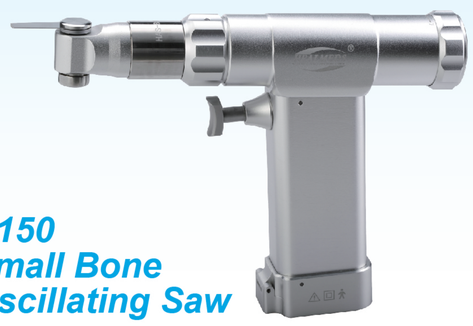

B150 Small Bone Oscillating Saw

Systerm B

Oscillations(osc/min):0-16000cpm
Noise:≤75dB
Sterilization temperature:155℃
Operation(V) voltage:7.2V
Battery Type:Ni-MH Green Battery
Battery capacity:1400mAh

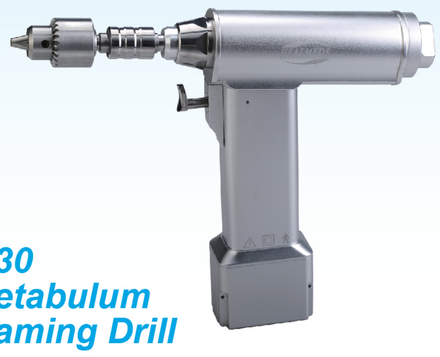

C130 Acetabulum Reaming Drill

System C

Speed Range:0-350rpm
Noise:≤75dB
Torque:5.5N-m
Operation(V) voltage:14.4V
Battery Type:Ni-MH Green Battery
Battery capacity:2000mAh

www.evolutisfrance.com

Evolutis

CREATEUR FABRICANT

Minimally Invasive Hip Surgery

Dedicated Instruments

Chirurgie Mini-Invasive de Hanche

Instruments dédiés

Evolutis MOTION INSIDE

Rasp Handles
Manches Porte-Râpe

Lot 18

Curved Posterior Handle
Manche Postérieur Courbe
H01 066

Double-Offset Antero-Lateral Handle
Manche Antéro-Externe Double Offset
H01 067 & H01 068

40° Anterior Handle
Manche Antérieur à 40°
H01 065

H01 067 & H01 068

Cup Impaction Handles
Manches pour Cupule

Curved Handle for Standard Cup
Manche Courbe pour Cupule Standard
H76 001

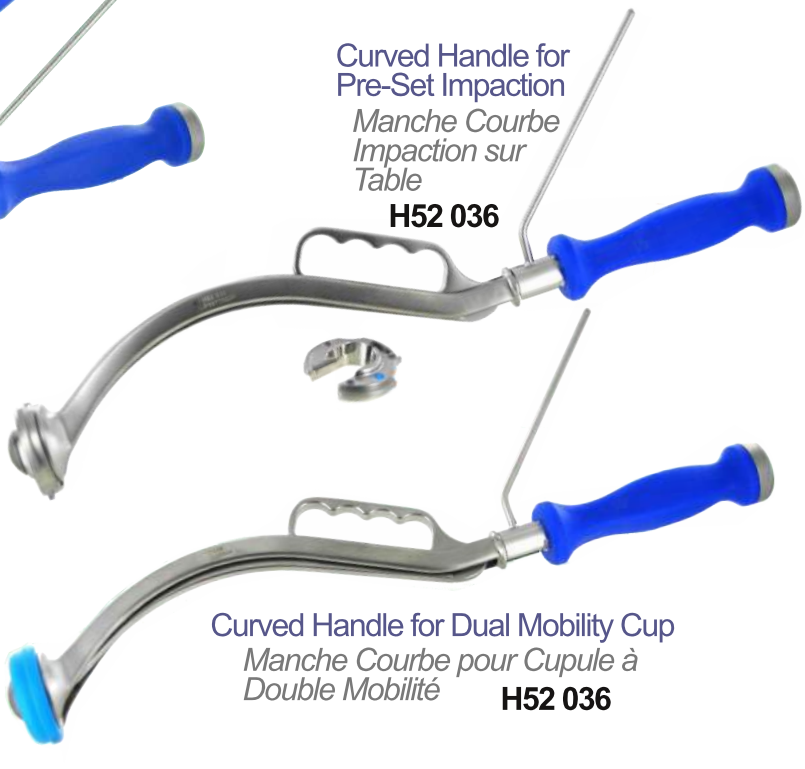

Curved Handle for Pre-Set Impaction
Manche Courbe Impaction sur Table
H52 036

Freeliner Pre-Set Impaction Plate
Platine d'Impaction sur Table (Freeliner)
H76 012 to/à **H76 017**

Dual Mobility Impaction Plate
Platine d'Impaction pour Double Mobilité
H52 P45 to/à **H52 P65**

Curved Handle for Dual Mobility Cup
Manche Courbe pour Cupule à Double Mobilité
H52 036

Retractors for Anterior Approach
Ecarteurs pour Voie Antérieure

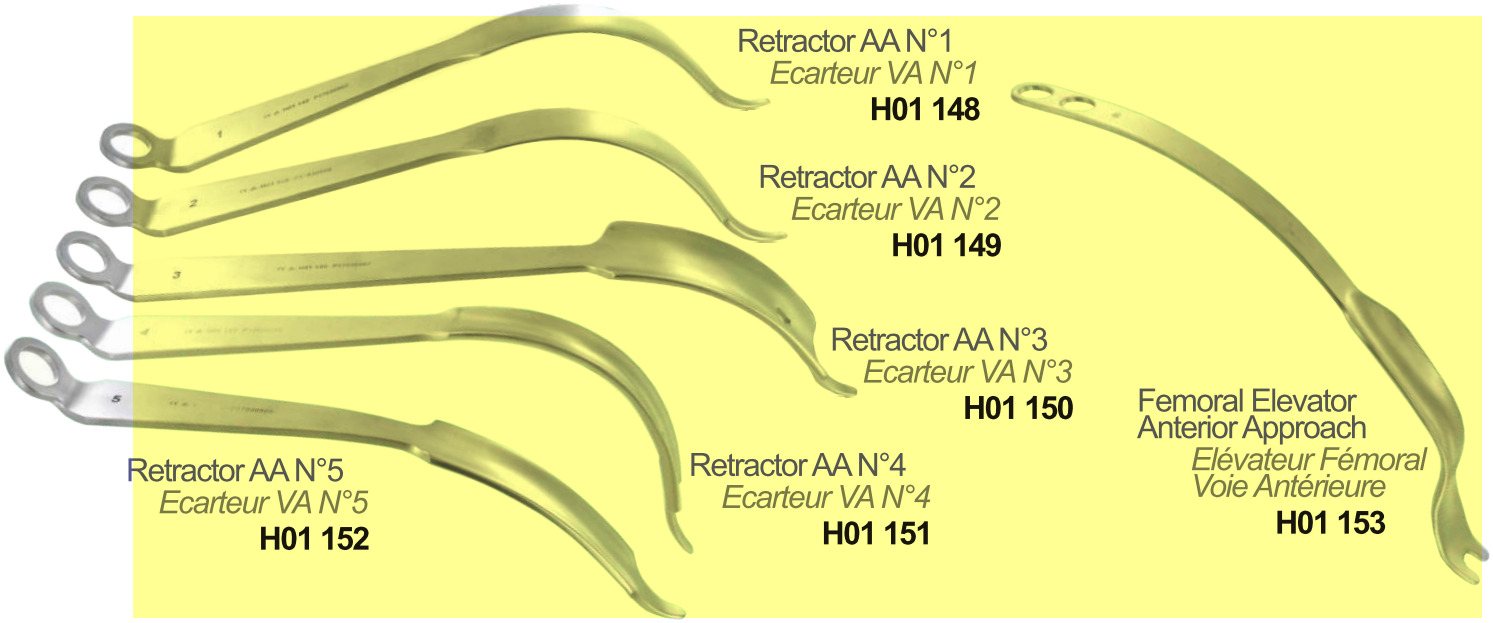

Retractor AA N°1
Ecarteur VA N°1
H01 148

Retractor AA N°2
Ecarteur VA N°2
H01 149

Retractor AA N°3
Ecarteur VA N°3
H01 150

Retractor AA N°4
Ecarteur VA N°4
H01 151

Retractor AA N°5
Ecarteur VA N°5
H01 152

Femoral Elevator
Anterior Approach
Elévateur Fémoral
Voie Antérieure
H01 153

Charnley Frame
Cadre de Charnley

NARROW (25mm) Bent Hohmann Retractor
(2 lengths: 96 & 130mm)
Ecarteur Hohmann à Palette FINE (25mm)
(2 longueurs : 96 & 130mm)
H01 046 - H01 146

LARGE (40mm)
Bent Hohmann Retractor
(2 lengths: 96 & 130mm)
Ecarteur Hohmann
à Palette LARGE (40mm)
(2 longueurs : 96 & 130mm)
H01 045 - H01 145

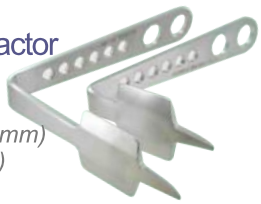

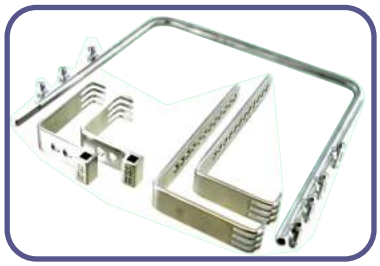

Charnley Frame only
Cadre seul **H01 041**

Short Blade (Fixed) 2 lengths: 62 & 82mm
Crochet Court (Fixe) 2 longueurs : 62 et 82mm
H01 043 - H01 050

Long Blade (Adjustable) 2 lengths: 72 & 92mm
Crochet Long (Réglable) 2 longueurs : 72 & 92mm
H01 042 - H01 044

Miscellaneous
Divers

Beckmann Static Retractor
L.300mm H.50mm
Ecarteur Statique Beckmann
L.300mm H.50mm
B80 566

Femoral Elevator
Posterior Approach
Elevateur Fémoral
Voie Postérieure
H01 047

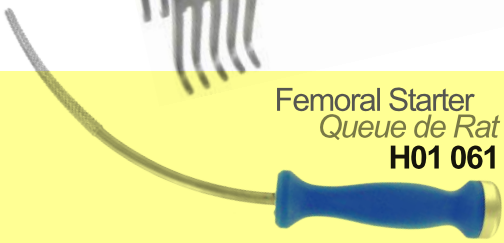

Femoral Starter
Queue de Rat
H01 061

Offset Acetabular
Reamer Handle
Manche de Fraise
à Cotyle Décalé

REFERENCES

Manche de Râpe Courbe voie Post. Curved Rasp Handle Post. approach	H01 066
Manche de Râpe 40° voie Ant. 40° Rasp Handle Ant. Approach	H01 065
Manche de Râpe Double-Offset voie Ant.-Externe Double-Offet Rasp Handle Ant.-Lateral approach	H01 067 & H01 068

Ecarteur statique type "Charnley" Charnley type frame	H01 041
Palette réglable pour écarteur statique (l.72 ou 92mm) Long static retractor blade for Charnley frame (l.72 or 92mm)	H01 042 & H01 044
Palette fixe pour écarteur statique (l. 62 ou 82mm) Short static retractor blade for Charnley frame (l.62 or 82mm)	H01 043 & H01 050
Ecarteur Hohmann à palette FINE 25mm (l.96 ou 130mm) NARROW 25mm Bent Hohmann retractor (l.96 or 130mm)	H01 045 & H01 145
Ecarteur Hohmann à palette LARGE 40mm (l.96 ou 130mm) LARGE 40mm Bent Hohmann retractor (l.96 or 130mm)	H01 046 & H01 146

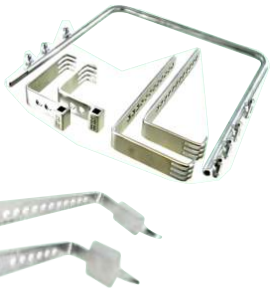

Impacteur Cupule Courbe à Gâchette Curved Cup Impactor with Trigger	H52 036
Platines pour Impaction DM Impaction plates for DM cup	H52 P45 à/to H52 P65
Platines pour Impaction Sur Table Freeliner Impaction Plates for Pre-set Freeliner	H76 012 à/to H76 017

Impacteur Cupule Courbe à Vis Curved Cup Impactor with Screw	H76 001
Tournevis pour Manche Cupule Courbe Screwdriver for Curved Cup Handle	H76 003
Vis pour Manche Cupule Courbe Screw for Curved Cup Handle	H76 002
Tige de version à 45° 45° version alignment rod	H76 019

Ecarteur Voie Antérieure #1 #1 Anterior Approach retractor	H01 148
Ecarteur Voie Antérieure #2 #2 Anterior Approach retractor	H01 149
Ecarteur Voie Antérieure #3 #3 Anterior Approach retractor	H01 150
Ecarteur Voie Antérieure #4 #4 Anterior Approach retractor	H01 151
Ecarteur Voie Antérieure #5 #5 Anterior Approach retractor	H01 152

Elévateur Fémur voie POST. Femoral Elevator POST. Approach	H01 047
Elévateur Fémur voie ANT. Femoral Elevator ANT. Approach	H01 153
Ecarteur Statique Beckmann 300mm Beckmann Static retractor 300mm	B80566
Queue de Rat Femoral Starter	H01 061

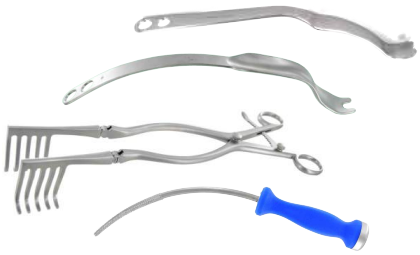

Evolutis
MOTION INSIDE

Evolutis
Avenue de la Libération, 42720 Briennon, France
Tel : +33. (0)477.60.79.99 – Fax : +33. (0)477.60.79.90

Designed and Manufactured in France

www.evolutisfrance.com

Oct 2017 / BI_MIS INSTR DOC H99

www.evolutisfrance.com

Evolutis

CREATEUR FABRICANT

Hactiv®
Reactiv™

Surgical Technique

Evolutis
MOTION INSIDE

HACTIV / CEMTIV HIP SYSTEM

The HACTIV uncemented primary femoral component is a fully HA coated titanium alloy stem, designed for immediate mechanical stability and long term biological fixation *(1)*.

Made in France by the group originally responsible for the manufacture of one of the most clinically successful hip designs internationally, the HACTIV has been widely used throughout Europe with excellent results *(2)*.

The basis of the design is a trapezoidal proximal and mid section to give immediate rotational stability and optimal metaphyseal fit.
The double taper longitudinal geometry with grooves that transfer load proximally ensure that the stem remains locked against the dense bone of the calcar and greater trochanter.

Long term fixation is enhanced through bone ingrowth into the HA coating which is plasma sprayed on to the grit blasted surface of the femoral component *(3)*.

Physiological loading of the calcar region and trabecular ingrowth to the HA coating also prevent the ingress of particulate matter, reducing the potential for osteolysis.

The CEMTIV femoral stem is the cemented version of the HACTIV. Made of High Nitrogen Content Stainless Steel material with a smooth and polished surface, the CEMTIV is available in the same range of sizes and can be implanted with the same instruments.

The HACTIV / CEMTIV Hip System offers stainless steel, cobalt chrome, pure alumina or composite ceramic femoral heads.
HACTIV / CEMTIV Femoral Heads come in 22.2mm, 28mm, 32mm and 36mm and 40mm (ceramic only) sizes.

1. Vidalain JP. Corail® Stem Long-Term Results Based upon the 15-Years ARTRO Group Experience. Fifteen Years of Clinical Experience with Hydroxyapatite Coatings in Joint Arthroplasty, Ed. Springer, 217-224, 200
2. The Norwegian Arthroplasty Register. http://www.haukeland.no/nrl/eng/default.htm
3. Frayssinet, P.; Hardy, D.; Hanker, J. and Giammara, B.: Natural History of Bone Response to Hydroxyapatite-Coated Prostheses Implanted in Humans. Cells and Materials, Vol. 5, No. 2, 1995: 125-13

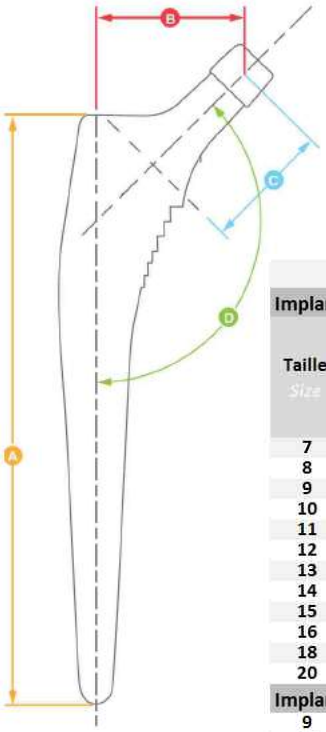

Lot 4

HACTIV / CEMTIV / REACTIV Dimensions

							A		B	C	D
Implants 135° STANDARD *Implants*											
Taille *Size*	**Réf** *Cat N°*						**Longueur** *Length*		**Offset Lateral**	**Longueur col** *Neck length*	*NSA* **Angle CCD**
	HACTIV HA	HACTIV Coll. HA	CEMTIV	REV Fendue *Slotted*	REV Coll. Fendue *Slotted*	REV Verrouil. *Distal Lock*	Première int. *Primary*	Révision *Revision*			
7	H49 007 (1)(2)						110		36.0	38.5	135°
8	H49 008 (1)(2)						115		37.0	38.5	135°
9	H49 009	H49 C009	H49 S09				130		38.0	38.5	135°
10	H49 010	H49 C010	H49 S10				140		39.0	38.5	135°
11	H49 011	H49 C011	H49 S11				145		39.5	38.5	135°
12	H49 012	H49 C012	H49 S12	H49 R012	H49 RC012	H49 RC112	150	180	40.0	38.5	135°
13	H49 013	H49 C013	H49 S13				155		40.5	38.5	135°
14	H49 014	H49 C014	H49 S14	H49 R014	H49 RC014	H49 RC114	160	200	41.0	38.5	135°
15	H49 015	H49 C015	H49 S15				165		41.5	38.5	135°
16	H49 016	H49 C016	H49 S16	H49 R016	H49 RC016	H49 RC116	170	210	42.0	38.5	135°
18	H49 018	H49 C018		H49 R018	H49 RC018	H49 RC118	180	220	43.0	38.5	135°
20	H49 020	H49 C020 (2)		H49 R020	H49 RC020	H49 RC120	190	240	44.0	38.5	135°
Implants 128° LATERO-VARUS *Implants*											
9	H49 L009	H49 LC009					130		45.0	42.0	128°
10	H49 L010	H49 LC010					140		46.0	42.0	128°
11	H49 L011	H49 LC011					145		46.5	42.0	128°
12	H49 L012	H49 LC012					150		47.0	42.0	128°
13	H49 L013	H49 LC013					155		47.5	42.0	128°
14	H49 L014	H49 LC014					160		48.0	42.0	128°
15	H49 L015	H49 LC015					165		48.5	42.0	128°
16	H49 L016	H49 LC016					170		49.0	42.0	128°
18	H49 L018	H49 LC018					180		50.0	42.0	128°
20	H49 L020 (2)	H49 LC020 (2)					190		51.0	42.0	128°

(1) not validated for patients exceeding 75kgs
(2) implants available only on special request

REFERENCES

Implants HACTIV® / REACTIV® *Implants*

	Standard 135° première intention *Primary Standard 135°*			Latero-varus 128° première intention *Primary Latero-varus 128°*		Standard 135° Révision Revision Standard 135°			
	HAP	à colerette Collared HAP	Cimenté *Cemented*	HAP	à colerette *Collared* HAP	Fendue *Slotted*	Fendue à colerette *Slotted Collared*	Verrouillage Distal *Distal Locking*	A Colerette Cimenté *Collared Cemented*
Taille / *Size* 7	H49 007 (1)(2)	NA	NA	NA	NA	NA	NA	NA	NA
Taille / *Size* 8	H49 008 (1)(2)	NA	NA	NA	NA	NA	NA	NA	NA
Taille / *Size* 9	H49 009	H49 C09	H49 S09	H49 L009	H49 LC09	NA	NA	NA	NA
Taille / *Size* 10	H49 010	H49 C10	H49 S10	H49 L010	H49 LC10	NA	NA	NA	NA
Taille / *Size* 11	H49 011	H49 C11	H49 S11	H49 L011	H49 LC11	NA	NA	NA	NA
Taille / *Size* 12	H49 012	H49 C12	H49 S12	H49 L012	H49 LC12	H49 R012	H49 RC012	H49 RC112	H49 SRC012
Taille / *Size* 13	H49 013	H49 C13	H49 S13	H49 L013	H49 LC13	NA	NA	NA	NA
Taille / *Size* 14	H49 014	H49 C14	H49 S14	H49 L014	H49 LC14	H49 R014	H49 RC014	H49 RC114	H49 SRC014
Taille / *Size* 15	H49 015	H49 C15	H49 S15	H49 L015	H49 LC15	NA	NA	NA	NA
Taille / *Size* 16	H49 016	H49 C16	H49 S16	H49 L016	H49 LC16	H49 R016	H49 RC016	H49 RC116	H49 SRC016
Taille / *Size* 18	H49 018	H49 C18	NA	H49 L018	H49 LC18	H49 R018	H49 RC018	H49 RC118	H49 SRC018
Taille / *Size* 20	H49 020	H49 C20 (1)	NA	H49 L020 (1)	H49 LC20 (1)	H49 R020	H49 RC020	H49 RC120	H49 SRC020

(1) limite de poids patient à 75kgs / *not validated for patients exceeding 75kgs*
(2) implants disponibles sur demande spéciale / *implants available only on special request*

Femoral broaches: choice of machined bone-compactor structure (picture) or embossed spiked structure.

Têtes Fémorales *Femoral Heads*

Matériau / *Matériau*	Taille *Size*	Réf. *Cat N°*
Inox M30NW / *Stainless Steel*	Ø28 -3.5mm	H11 1280
Inox M30NW / *Stainless Steel*	Ø28 +0mm	H11 1281
Inox M30NW / *Stainless Steel*	Ø28 +3.5mm	H11 1282
Inox M30NW / *Stainless Steel*	Ø28 +7mm	H11 1283
Chrome-Cobalt / *Cobalt-Chromium* (1)	Ø28 -7mm	H10 1279
Chrome-Cobalt / *Cobalt-Chromium*	Ø28 -3.5mm	H10 1280
Chrome-Cobalt / *Cobalt-Chromium*	Ø28 +0mm	H10 1281
Chrome-Cobalt / *Cobalt-Chromium*	Ø28 +3.5mm	H10 1282
Chrome-Cobalt / *Cobalt-Chromium*	Ø28 +7mm	H10 1283
Chrome-Cobalt / *Cobalt-Chromium* (1)(3)	Ø28 +10.5mm	H10 1284
Chrome-Cobalt / *Cobalt-Chromium*	Ø32 -4mm	H10 1320
Chrome-Cobalt / *Cobalt-Chromium*	Ø32 +0mm	H10 1321
Chrome-Cobalt / *Cobalt-Chromium*	Ø32 +4mm	H10 1322
Chrome-Cobalt / *Cobalt-Chromium*	Ø32 +8mm	H10 1323

Matériau / *Matériau*	Taille *Size*	Réf. *Cat N°*
Alumine / *Alumina*	Ø28 -3.5mm	H14 1280
Alumine / *Alumina*	Ø28 +0mm	H14 1281
Alumine / *Alumina*	Ø28 +3.5mm	H14 1282
Céram. Composite / *Composite Ceram.*	Ø32 -4mm	H14 C1320
Céram. Composite / *Composite Ceram.*	Ø32 +0mm	H14 C1321
Céram. Composite / *Composite Ceram.*	Ø32 +4mm	H14 C1322
Céram. Composite / *Composite Ceram.*	Ø32 +8mm	H14 C1323
Céram. Composite / *Composite Ceram.*	Ø36 -4mm	H14 C1360
Céram. Composite / *Composite Ceram.*	Ø36 +0mm	H14 C1361
Céram. Composite / *Composite Ceram.*	Ø36 +4mm	H14 C1362
Céram. Composite / *Composite Ceram.*	Ø36 +8mm	H14 C1363

From top : postero-lateral, anterior approach, and lateral offset broach handle.

Instrumentation HACTIV® *Instrument Set* H50 9100

Description	Nbre. *Numb.* Articles	Réf. *Cat N°*
Plateau avec couvercle / *Tray with Lid*	1	H50 9000
Manche porte-râpe / *Broach handle*	2	H01 009
Ciseau évideur / *Box chisel*	1	H01 013
Chemise bt conique / *Conical tip sleeve*	1	H01 021
Impacteur à bout sphérique	1	H01 023
Masse coulissante / *Slap hammer*	1	H01 033
Embout pousse-tête / *Head pusher tip*	1	H02 001
Tête d'essai Ø28 -3.5mm *Trial Head*	1	H02 2280
Tête d'essai Ø28 +0mm *Trial Head*	1	H02 2281
Tête d'essai Ø28 +3.5mm *Trial Head*	1	H02 2282
Tête d'essai Ø28 +7mm *Trial Head*	1	H02 2283
Tête d'essai Ø32 -4mm *Trial Head*	1	H02 2320
Tête d'essai Ø32 +0mm *Trial Head*	1	H02 2321
Tête d'essai Ø32 +4mm *Trial Head*	1	H02 2322
Impacteur de tige / *Stem impactor*	1	H38 022
Col d'essai 135° standard *Trial Neck*	1	H50 003
Col d'essai 128° latero-varus *Trial Neck*	1	H50 005

Description	Nbre. *Numb.* Articles	Réf. *Cat N°*
Râpe Taille 9 / *Broach size 9*	1	H50 009
Râpe Taille 10 / *Broach size 10*	1	H50 010
Râpe Taille 11 / *Broach size 11*	1	H50 011
Râpe Taille 12 / *Broach size 12*	1	H50 012
Râpe Taille 13 / *Broach size 13*	1	H50 013
Râpe Taille 14 / *Broach size 14*	1	H50 014
Râpe Taille 15 / *Broach size 15*	1	H50 015
Râpe Taille 16 / *Broach size 16*	1	H50 016
Râpe Taille 18 / *Broach size 18*	1	H50 018
Râpe Taille 20 / *Broach size 20*	1	H50 020

Options	Nbre. *Numb.* Articles	*Numb.* Articles
Anterior approach broach handle	2	H01 027
Right Offset broach handle	1	H01 048
Left Offset broach handle	1	H01 049
Head pusher tip for Ø36 & 40mm	1	H36 002

Materials:
Coated HACTIV® and REACTIV™ stems : titanium alloy TA6V according ISO 5832-3 + Calcium Hydroxyapatite
Cemented CEMTIV® stems : high nitrogen content stainless steel according ISO 5832-9
Femoral heads : high nitrogen content stainless steel according ISO 5832-9 or cobalt-chromium alloy according ISO 5832-4 or pure alumina ceramic according ISO 6474-1 or ceramic composite according ISO 6474-2
Locking screws: *titanium alloy TA6V according ISO 5832-3*
Vacuum packed. Gamma ray sterilised.

CE 0086 Evolutis
Avenue de la Libération, 42720 Briennon, France
Tel : +33. (0)477.60.79.99 – Fax : +33. (0)477.60.79.90

Designed and Manufactured in France

www.evolutisfrance.com

Avr 2017 / Réf.: EN_HACTIV STC H50 (H50 451)

www.evolutisfrance.com

Evolutis

CREATEUR FABRICANT

Product Sheet

DM Cemented & Cross-shell

Fiche Produit

Dual Mobility Cemented acetabular Cup and Protrusio cross-shell

Cupule acétabulaire à double mobilité à Cimenter et Croix de reconstruction

Evolutis
MOTION INSIDE

HIP

Evolutis

CREATEUR FABRICANT

CAPTIV

press fit dual mobility cup

POLYETHYLENE

Crosslinked Polyethylene

CAPITOLE

Cemented dual mobility cup

10 years clinical use

CAPTIV DM®
CAPITOLE®

DUAL MOBILITY: A GUARANTEE OF STABILITY

www.evolutisfrance.com

CAPTIV DM :
Dual Mobility ensures a high degree of articular stability and large range of motion. Primary stability is ensured by an excellent peripheral press fit.

CAPTIV specifications :
• The cups are made from nitrogen enriched M30 stainless steel : this steel is 40% more resistant than 316L and much less prone to corrosion. It avoids the risk of galvanic corrosion with titanium coating.
• The cup is entirely coated with a layer of 150 microns of porous titanium with a second coating of 100 microns of osteoconductive hydroxyapatite
• Peripheral pressfit is proportional to size with an average of 1mm.
• The pole is congruent with bone reamed, it is recommended to use the same size cup as the reamer ensuring the press fit.

CAPITOLE :
A complete range of Dual Mobility cups :
press-fit and cemented Dual Mobility ensures a high degree of articular stability and large ranges of motion.

CAPITOLE specifications :
The cemented CAPITOLE C cup has a mobile insert for enhanced stability in different indications.
• Stainless steel cup, mirror polished inside and on the outside.
• Reaming and cup size are size for size.
• The cup has incorporated spacers which guarantee a regular cement mantle according to Charnley principles.
The peripheral rim is flanged which ensures correct centring of the cup and cement pressurisation. The cement escapes via 3 vents.
Cement mantle and pressurisation is therefore of good quality.

MOBILE INSERT :

• The chamfered mobile insert is strongly retentive in order to prevent the head from dislocating.

Test CRITT (Independent Laboratory) :105,5daN pull out (1 daN equivalent to 1Kg).

•The polyethylene sphere behaves like a big head of at least 40 mm which ensures a large range of motion and stability which has been shown to be above 99,8%.

• Internal diameter for different heads. :

*Polyethylene for Ø28 mm heads.

• The range of sizes extends from Ø46mm to Ø62 mm (Ø47mm to Ø61mm Cemented). Polyethylene wear of the retentive collar is reduced by the self centring anti capsizing insert which automatically realigns itself in the axis of constraints.

PEXEL® Polyethylene, "moderately crosslinked"

Ultra high molecular weight polyethylene (over 7 million), only made by extrusion.
Cross linkage is obtained by using a moderate level of irradiation of about 40 kGy under vacuum.
Vac U Pac packaging is done under vacuum in a foil pouch free of oxygen,
(seal validation undertaken by the Laboratoire National d'Essai (LNE))
Wear test undertaken by CERAH laboratory on a CAPITOLE T cup with an aged polyethylene:

- After 5 000 000 de cycles, the amount of mass lost was 131,7 mg, which corresponds to a penetration rate of 0,05 mm/year ; ie 5 times less than with standard polyethylene.

- The graph represents mass lost during walking cycles, getting up from a chair and stairs.

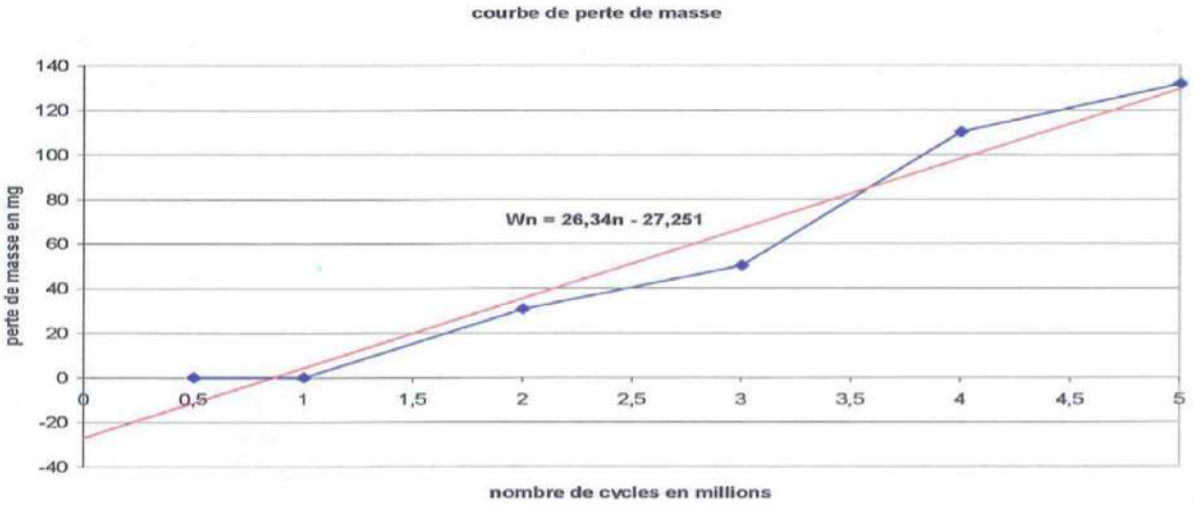

References

CAPITOLE C dual mobility Cemented cup
Cupule à Cimenter à double mobilité CAPITOLE C

LOt 4

Shell ø *Cupule*	CAPITOLE C	ø22.2 PE Liner / *Insert*	ø 28 PE Liner / *Insert*
ø45	H51 C045	H51 M2245	-
ø47	H51 C047	H51 M2247	H51 M2847
ø49	H51 C049	H51 M2249	H51 M2849
ø51	H51 C051	H51 M2251	H51 M2851
ø53	H51 C053	H51 M2253	H51 M2853
ø55	H51 C055	H51 M2255	H51 M2855
ø57	H51 C057	H51 M2257	H51 M2857
ø59	H51 C059	H51 M2259	H51 M2859
ø61	H51 C061	H51 M2261	H51 M2861

Protrusio Cross-shell
Croix de reconstruction

Size / Taille	For cemented cup ø *Pour cupule ø*	Inner ø *Interne*	Outer ø *Externe*	Cat N°
ø46	≤45	46	50	H13 046
ø50	46 - 49	50	54	H13 050
ø54	50 - 53	54	58	H13 054
ø58	54 - 57	58	62	H13 058
ø62	58 - 61	62	66	H13 062

Screws
Vis

Description	ø (mm)	L. (mm)	Cat N°
Cortical screw / *Vis corticale*	5	35	H16 S5035
Cortical screw / *Vis corticale*	5	40	H16 S5040
Cortical screw / *Vis corticale*	5	45	H16 S5045
Cortical screw / *Vis corticale*	5	50	H16 S5050
Cortical screw / *Vis corticale*	5	55	H16 S5055
Cortical screw / *Vis corticale*	5	60	H16 S5060

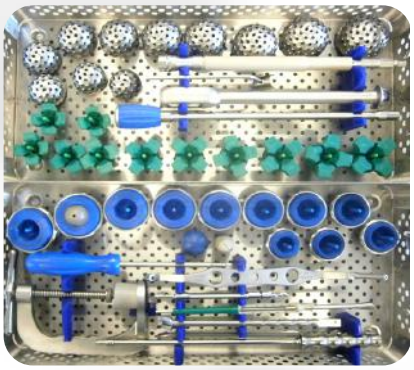

Instrumentation CAPITOLE Straight Handle *Manche Droit* **H52 9100**

Instrumentation Cross-shell *Croix de reconstruction* **H03 9102**

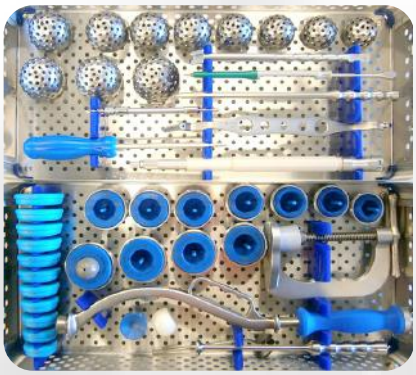

Instrumentation CAPITOLE Curved Handle *Manche Courbe* **H52 9101**

Evolutis MOTION INSIDE

Mentions légales :
Les implants acétabulaires CAPITOLE sont des dispositifs médicaux implantables de classe III indiqués pour les arthroplasties primaires totales (PTH) ou en révision (PTHR) de la hanche selon la version.
Les Croix de reconstruction sont des dispositifs médicaux implantables de classe IIb indiqués pour les révisions d'arthroplasties (PTHR) de la hanche.
Les implants CAPITOLE et Croix de reconstruction sont pris en charge par l'assurance maladie. Informations sur www.ameli.fr.
Le chirurgien est expressément invité à prendre connaissance des instructions mentionnées sur la notice d'utilisation incluse dans le conditionnement du DMI, ainsi que celles portées sur le manuel de technique opératoire délivré à la mise en place du produit ou disponible en téléchargement sur le site www.evolutisfrance.com.

***Materials* / Matériaux :**
Cups: Stainless steel according ISO 5832-1
Liners: UHMWPE according ISO 5834-1 & 2
Cross-shell: Stainless steel according ISO 5832-1 with spacers in UHMWPE according ISO 5834-1 & 2
Screws: Stainless steel according ISO 5832-1
Packaging: Sterilized under Gamma irradiation, VacUpac packaging
Cupules : Acier inoxydable selon ISO 5832-1
Inserts : UHMWPE selon ISO 5834-1 et 2
Croix de reconstruction : Acier inoxydable selon ISO 5832-1 et spacers en UHMWPE selon ISO 5834-1 & 2
Vis : Acier inoxydable selon ISO 5832-1
Conditionnement : Stérilisé sous rayonnement Gamma, conditionnement VacUpac

CE 2797
Evolutis
10 Place des Tuiliers, 42720 Briennon, France
Tel : +33. (0)477.60.79.99 – Fax : +33. (0)477.60.79.90
www.evolutisfrance.com

Designed and Manufactured in France

Jun 2019 / Ref: BI_DM Cemented FP H52 *(H52 432)*

12/14 FEMORAL HEADS

Stainless Steel, Cobalt-Chrome , Ceramic

Stainless steel ISO5832-9 standard

Lot1, Lot 4

H11 1220	Stainless steel Ø 22.2 mm short -2
H11 1221	Stainless steel Ø 22.2 mm medium 0
H11 1222	Stainless steel Ø 22.2 mm long +2
H11 1279	Stainless steel Ø 28 mm extra short -7*
H11 1280	Stainless steel Ø 28 mm short -3.5
H11 1281	Stainless steel Ø 28 mm medium 0
H11 1282	Stainless steel Ø 28 mm long +3.5
H11 1283	Stainless steel Ø 28 mm extra long +7
H11 1320	Stainless steel Ø 32 mm short -4
H11 1321	Stainless steel Ø 32 mm medium 0
H11 1322	Stainless steel Ø 32 mm long +4
H11 1323	Stainless steel Ø 32 mm extra long +8

Composite Alumina ISO 6474 standard

H14 C1280	Alumina Composite Ø 28 mm short -3.5**
H14 C1361	Alumina Composite Ø 28 mm med 0**
H14 C1362	Alumina Composite Ø 28 mm long +3.5**
H14 C1320	Alumina Composite Ø 32 mm short -3.5
H14 C1321	Alumina Composite Ø 32 mm medium 0
H14 C1322	Alumina Composite Ø 32 mm long +3.5
H14 C1323	Alumina Composite Ø 32 mm long +8**
H14 C1360	Alumina Composite Ø 36 mm short -4
H14 C1361	Alumina Composite Ø 36 mm med 0
H14 C1362	Alumina Composite Ø 36 mm long +4
H14 C1363	Alumina Composite Ø 36 mm extra long +8**
H14 C1400	Alumina Composite Ø 40 mm short -4
H14 C1401	Alumina Composite Ø 40 mm med 0
H14 C1402	Alumina Composite Ø 40 mm long +4
H14 C1403	Alumina Composite Ø 40 mm long +8**

Cobalt-Chrome ISO5832-12 standard

Lot 3, Lot 12

H10 1220	Cobalt Chrome Ø 22.2 mm short -2
H10 1221	Cobalt Chrome Ø 22.2 mm medium 0
H10 1222	Cobalt Chrome Ø 22.2 mm long +2
H10 1279	Cobalt Chrome Ø 28 mm extra short -7*
H10 1280	Cobalt Chrome Ø 28 mm short -3.5
H10 1281	Cobalt Chrome Ø 28 mm medium 0
H10 1282	Cobalt Chrome Ø 28 mm long +3.5
H10 1283	Cobalt Chrome Ø 28 mm extra long +7
H10 1320	Cobalt Chrome Ø 32 mm short -4
H10 1321	Cobalt Chrome Ø 32 mm medium 0
H10 1322	Cobalt Chrome Ø 32 mm long +4
H10 1323	Cobalt Chrome Ø 32 mm extra long +8
H10 1360	Cobalt Chrome Ø 36 mm short -4
H10 1361	Cobalt Chrome Ø 36 mm medium 0
H10 1362	Cobalt Chrome Ø 36 mm long +4
H10 1363	Cobalt Chrome Ø 36 mm extra long +8

Alumina ISO 6474 standard

H14 1280	Alumina Ceramic Ø 28 mm short -3.5
H14 1281	Alumina Ceramic Ø 28 mm medium 0
H14 1282	Alumina Ceramic Ø 28 mm long +3.5
H14 1320	Alumina Ceramic Ø 32 mm short -4
H14 1321	Alumina Ceramic Ø 32 mm medium 0
H14 1322	Alumina Ceramic Ø 32 mm long +4
H14 1360	Alumina Ceramic Ø 36 mm short -4
H14 1361	Alumina Ceramic Ø 36 mm medium 0
H14 1362 A	lumina Ceramic Ø 36 mm long +4

*** On request for stems sizes 6-7-8.** **** On request only**