A.58

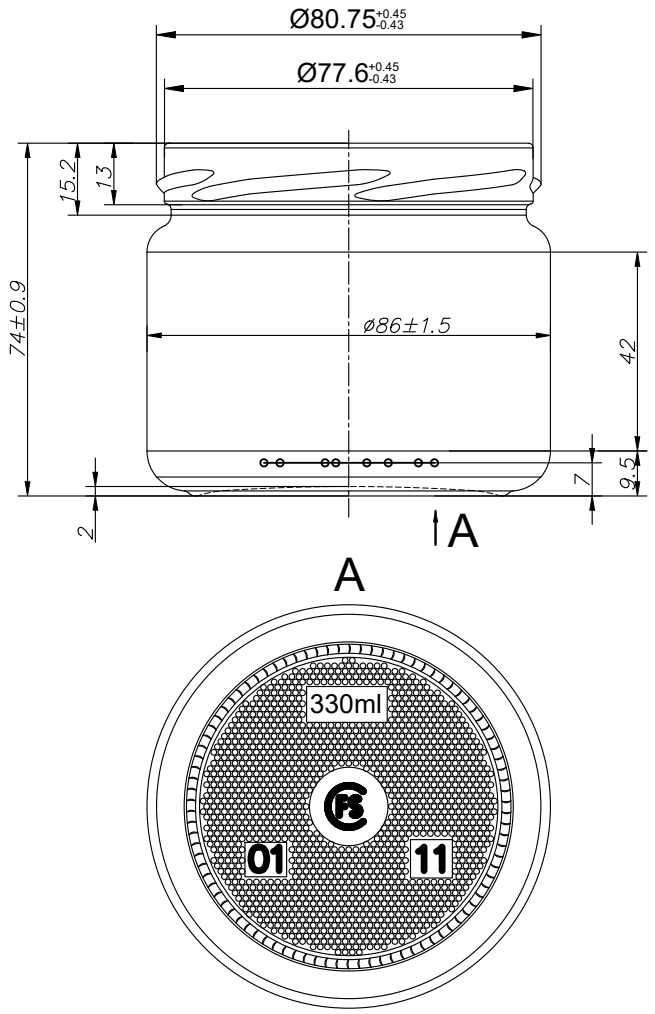

Characteristics

Full capacity, cm ³ –330±6
Weight recommended, g –174

Thickness of walls not less, mm 1.2
Thikness of a bottom not less, mm–2.0
Therminal stability ,difference of temperatures, not less, °C –40
Internal hydrostatic pressure during 5s not less, kgf/cm ²–3
Resistance to effort of compression not less, N–2200

Chang.	Letter	Document N	Signature	Date
Designed		Cosovschi P.		23.04.25
Constr.principal		Cosovschi P.		23.04.25
Dir.of manuf.		Baltaji I.		

A.58

Jar
III–82–330

Flint

Letter	Weight	Scale
		1:1

Sheet 1 | Sheets 4

FSC

Copied

Format A3