This document contains proprietary information and may not be reproduced in any form whatsoever, nor may it be exploited by or its contents disclosed to third parties unless express written permission has been granted by the owner. Any contravention shall incur liability for damages. All rights for the grant of a patent or application for a utilitiy model are reserved.

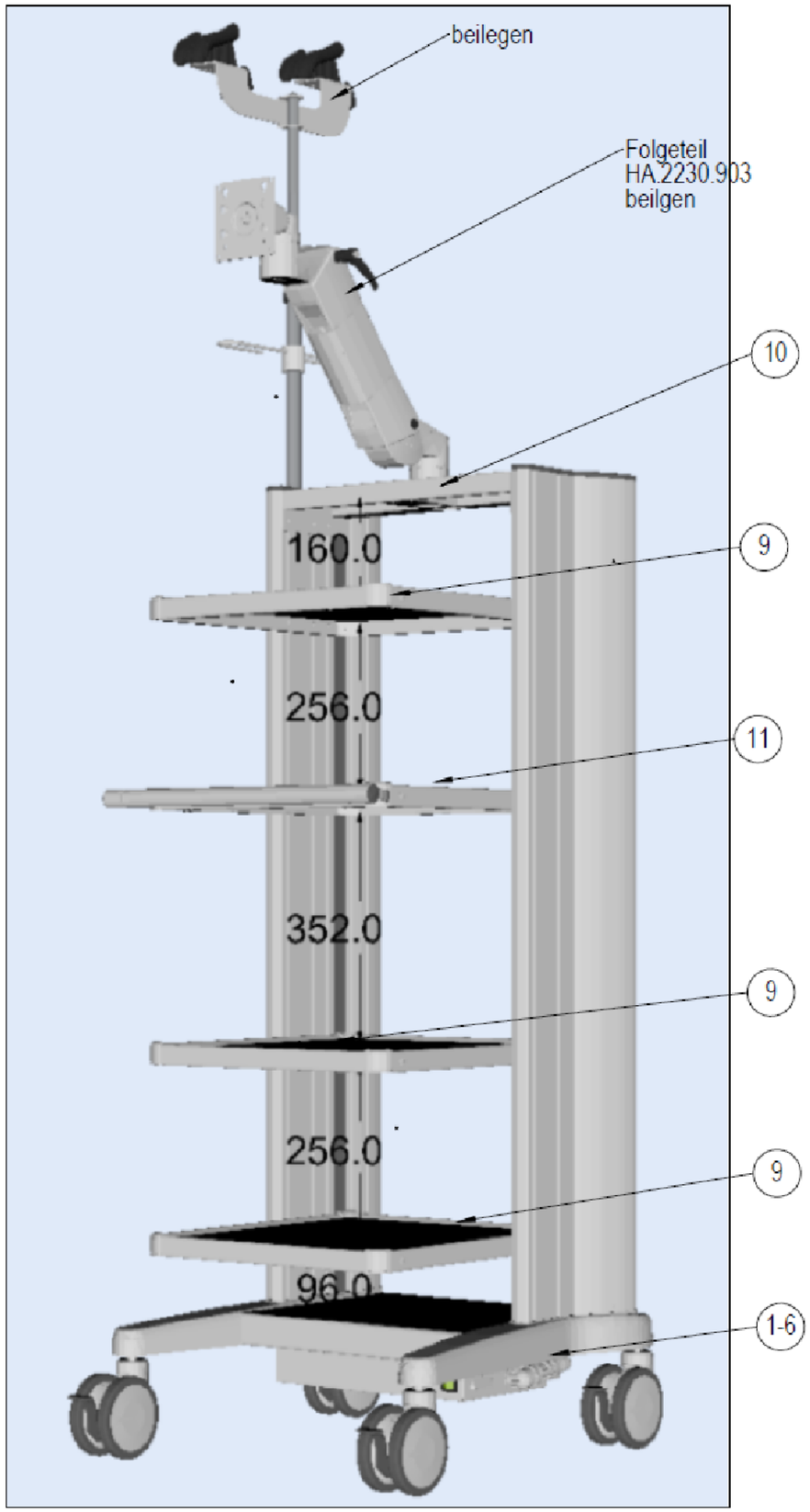

Digitally signed by Bolea Petru
Date: 2025.03.21 08:59:25 EET
Reason: MoldSign Signature
Location: Moldova
MOLDOVA EUROPEANĂ

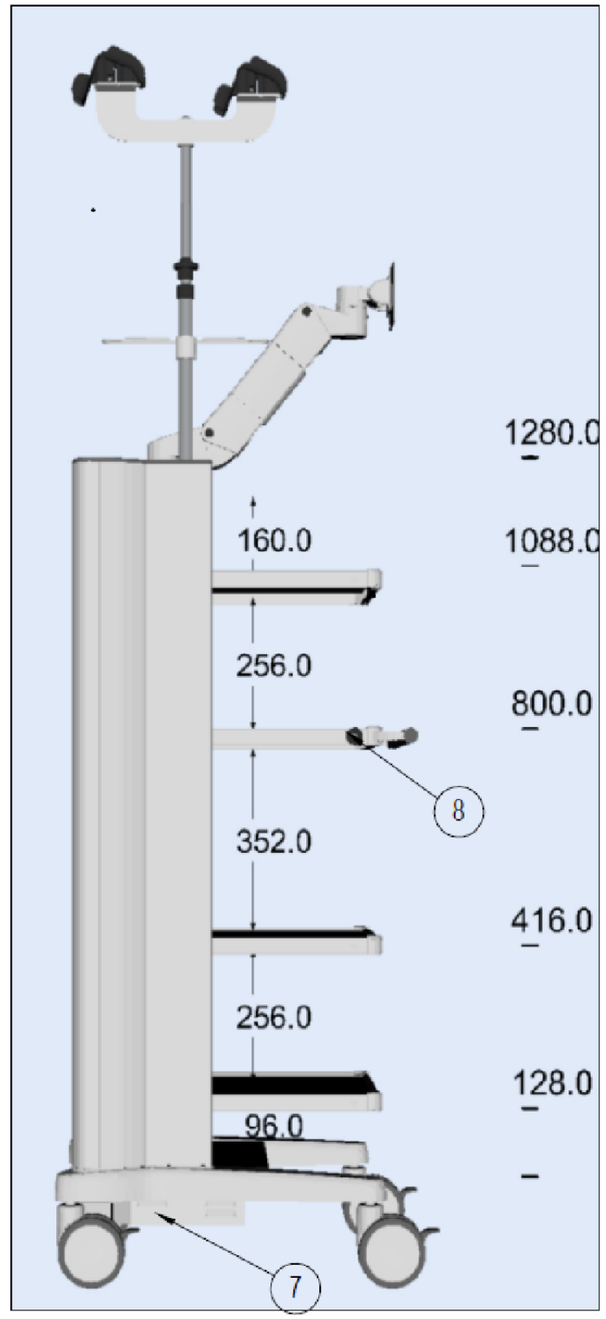

REV.	REV. DESCR.	DATE	NAME
001	1000	30.11.2023	CWanger
000	0000	29.11.2023	CWanger

	DATE	NAME
DRAWN BY	29.11.2023	CWanger
APPROVED AWK / VTI	02.10.2023	WW/MARSC
RELEASED	30.11.2023	CWanger

ITD GmbH
Lilienthalstraße 19
85579 Neubiberg
Germany
Phone +49-89-614425-0
sales@itd-cart.com

Kunde / customer:
ImunotehnoMed

Quelle / Source:

Grundfarbe / main colour: RAL 7035

Dekorfarbe / decor colour: RAL 7035

TITLE
compact-cart
B450 40E
compact-cart
W450 40U

Zeichnungsnummer / drawing number
OM.4320.903

SHEET 1 / 1