Digitally signed by Bolea Petru
Date: 2025.09.04 17:14:12 EEST
Reason: MoldSign Signature
Location: Moldova
MOLDOVA EUROPEANĂ

Systec Mediaprep-10

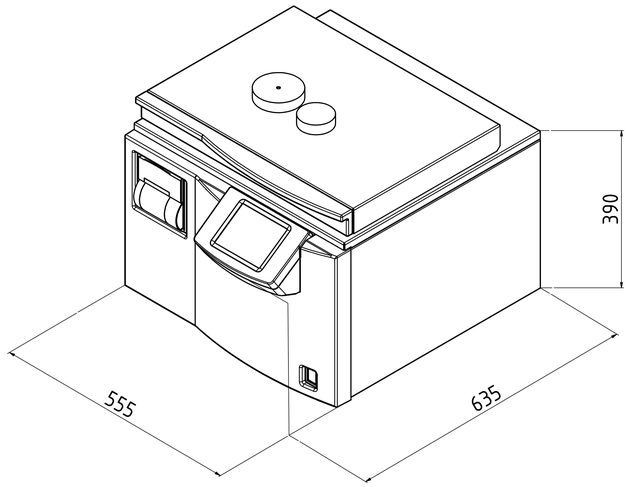

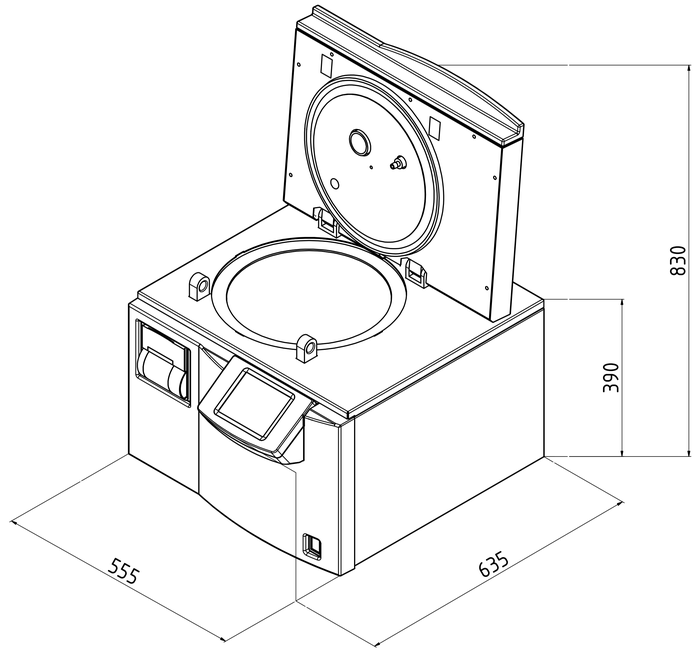

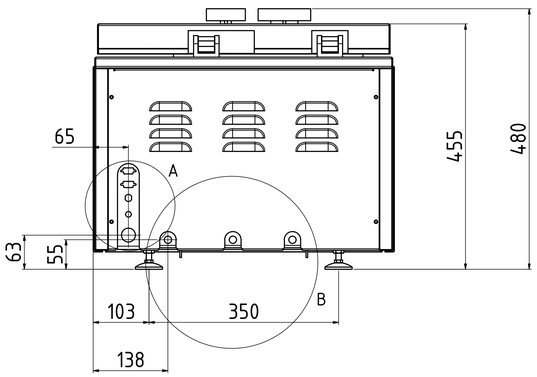

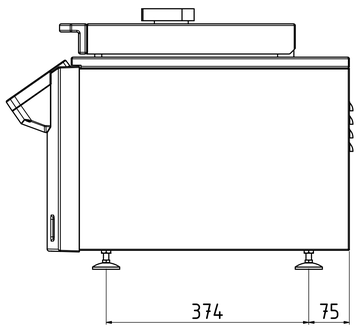

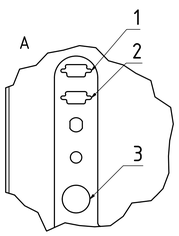

B (1 : 2)

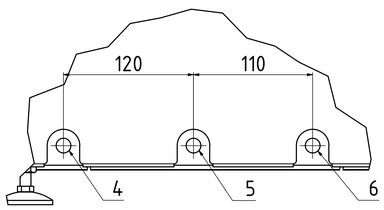

Technical data				
No.	Description	Size	Mediaprep	Comments
1	Interface		X	RS-232 (Ethernet network and USB compatible)
2	Interface		X	RS-485 (Connection with Mediafill)
3	Power supply*		X	1x230V+N+PE / 50/60Hz / 16 Ampere / CEE 7/4 socket, Type F
4	Demineralized water*[3]	Quick-release coupling	X	3/4" external thread on site ≥ 1bar water pressure Σ alkaline earth ions < 0,02 mmol/l, conductivity: 0,1 - 15 µS/cm
5	Drain	Quick-release coupling	X	Temperature-resistant installation (103°C in case of failure) Temperature controlled at 70°C (setable)
6	Tab water*[3]	Quick-release coupling	X	3/4" external thread on site ≥ 1bar water pressure Σ alkaline earth ions ≤ 2,0 mmol/l, conductivity max. 300 µS/cm, 11°dH, 200mg/l CaCO3

	Art.No.	Heat emission	Net weight	Test weight*[2]
Systec Mediaprep-10	1710	<400 Watt/h	50 kg	67,5 kg

X = Standard O = Optional -- = Not Available Lenght dimensions in mm

* Other voltages available on request

*[2] Test weight: chamber completely filled with water for pressure test

*[3] The included hose is required 3/4 "external thread on site

Allgemein-toleranz ISO 2768 T1-m	Oberfläche	Maßstab:	Gewicht:
		Werkstoff: Bemerkung:	
Gezeichnet 15.05.2014 Zitzke		Systec Mediaprep-10	
Systec the autoclave company		Zng.-Nr.: AZ 1710 EN	Rev.: 1
			A0