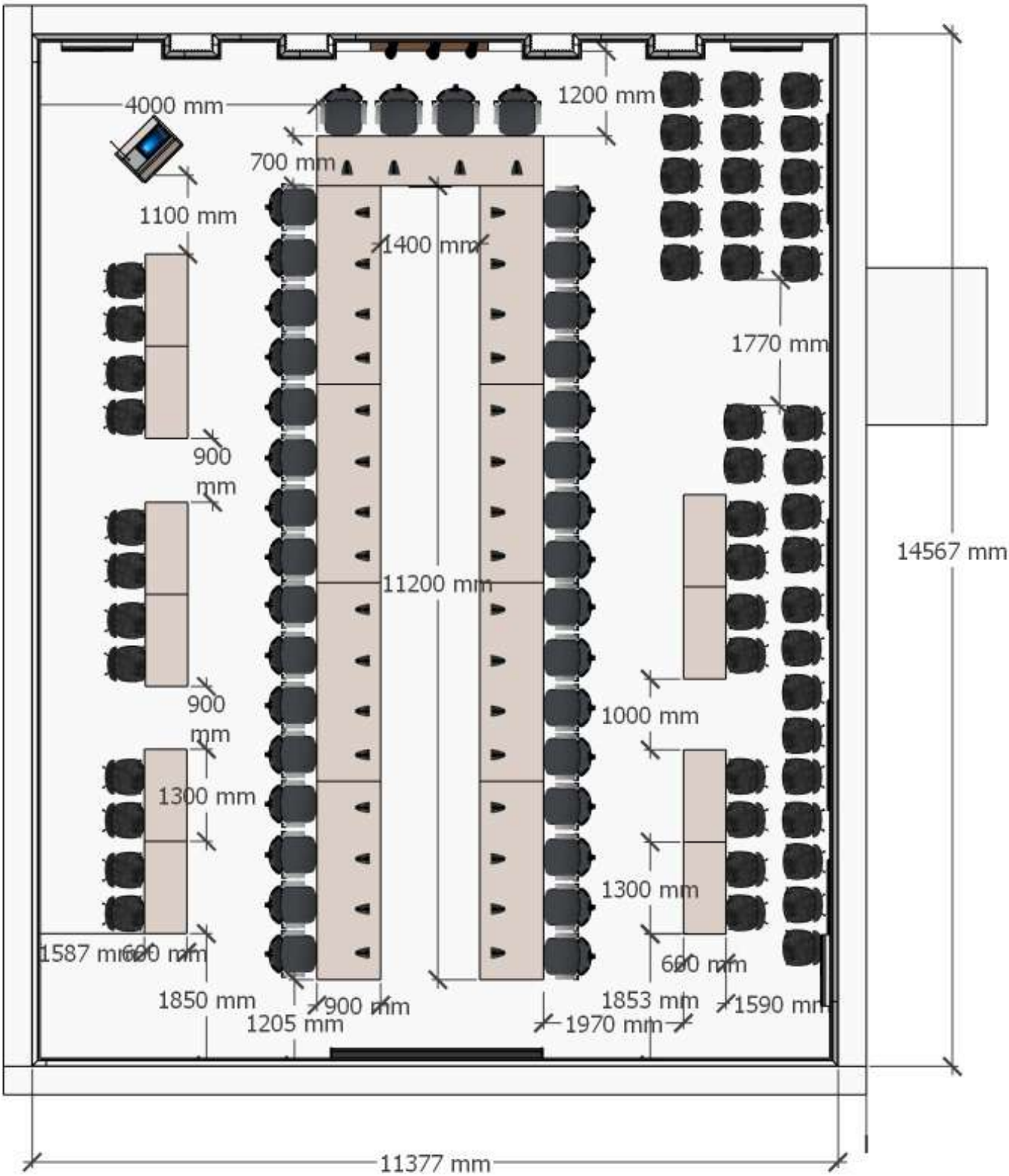
4000 mm
1200 mm
700 mm
1100 mm
1400 mm
1770 mm
900 mm
14567 mm
11200 mm
900 mm
1000 mm
1300 mm
1300 mm
1587 mm
600 mm
600 mm
1850 mm
900 mm
1205 mm
1853 mm
1970 mm
1590 mm
11377 mm

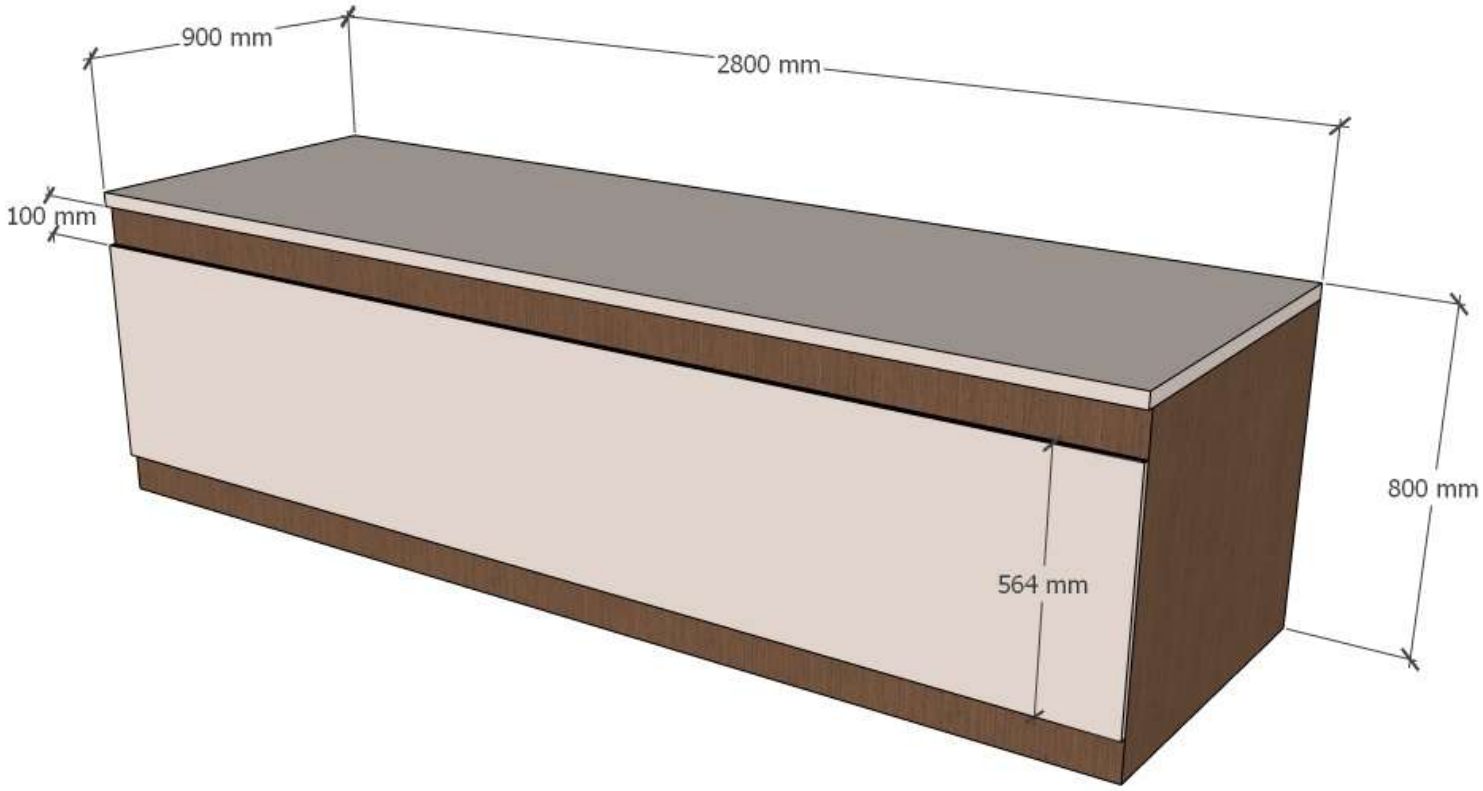
900 mm
2800 mm
100 mm
800 mm
564 mm

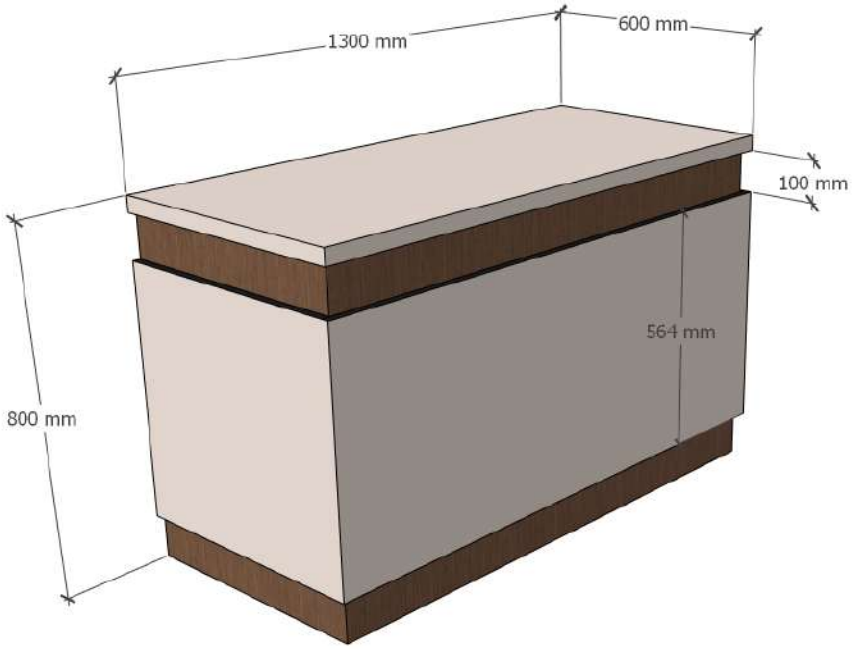
1300 mm
600 mm
100 mm
564 mm
800 mm

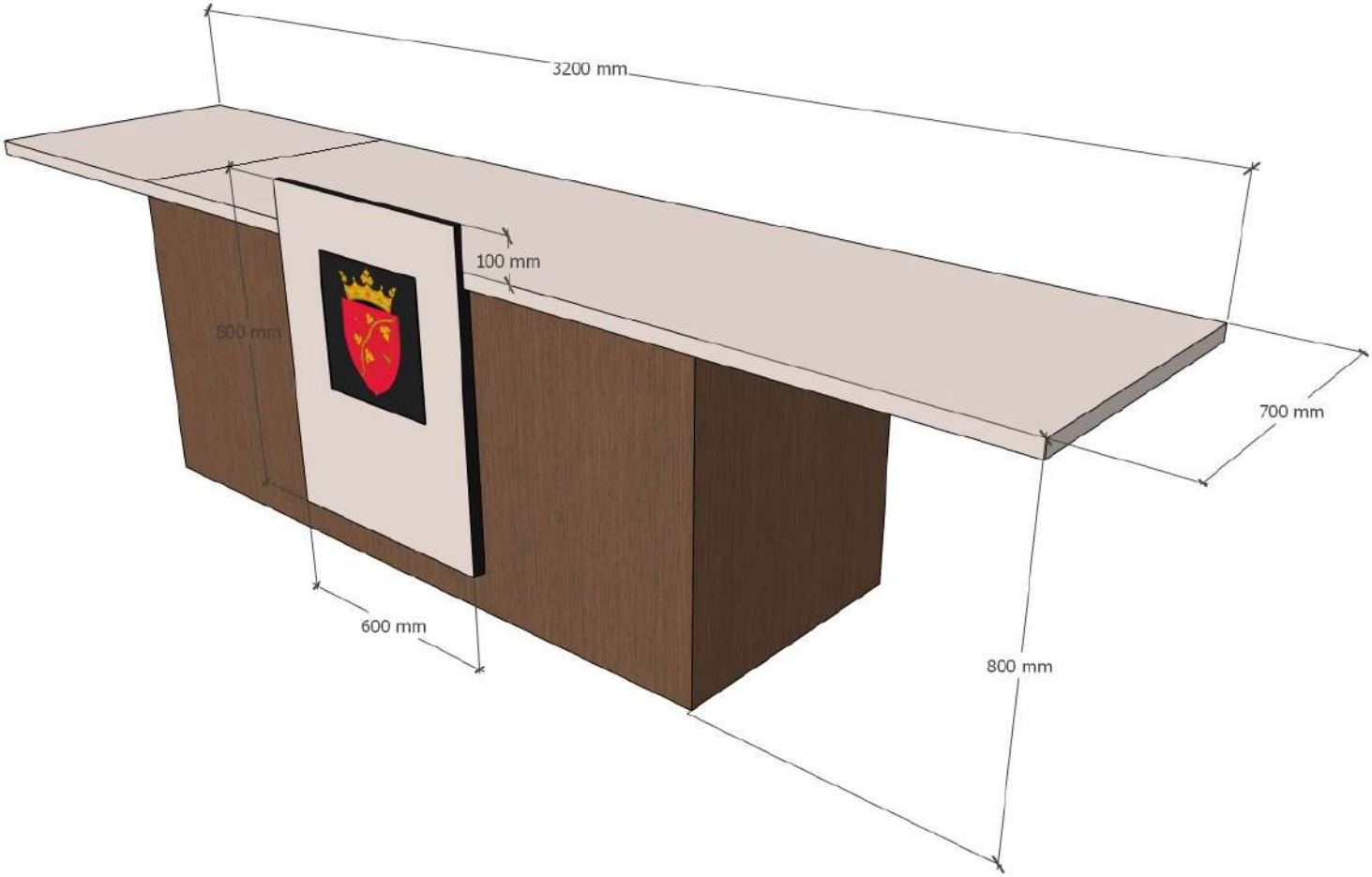
3200 mm
100 mm
800 mm
700 mm
600 mm
800 mm

EGGER H 309 ST12
4523 mm
11383 mm

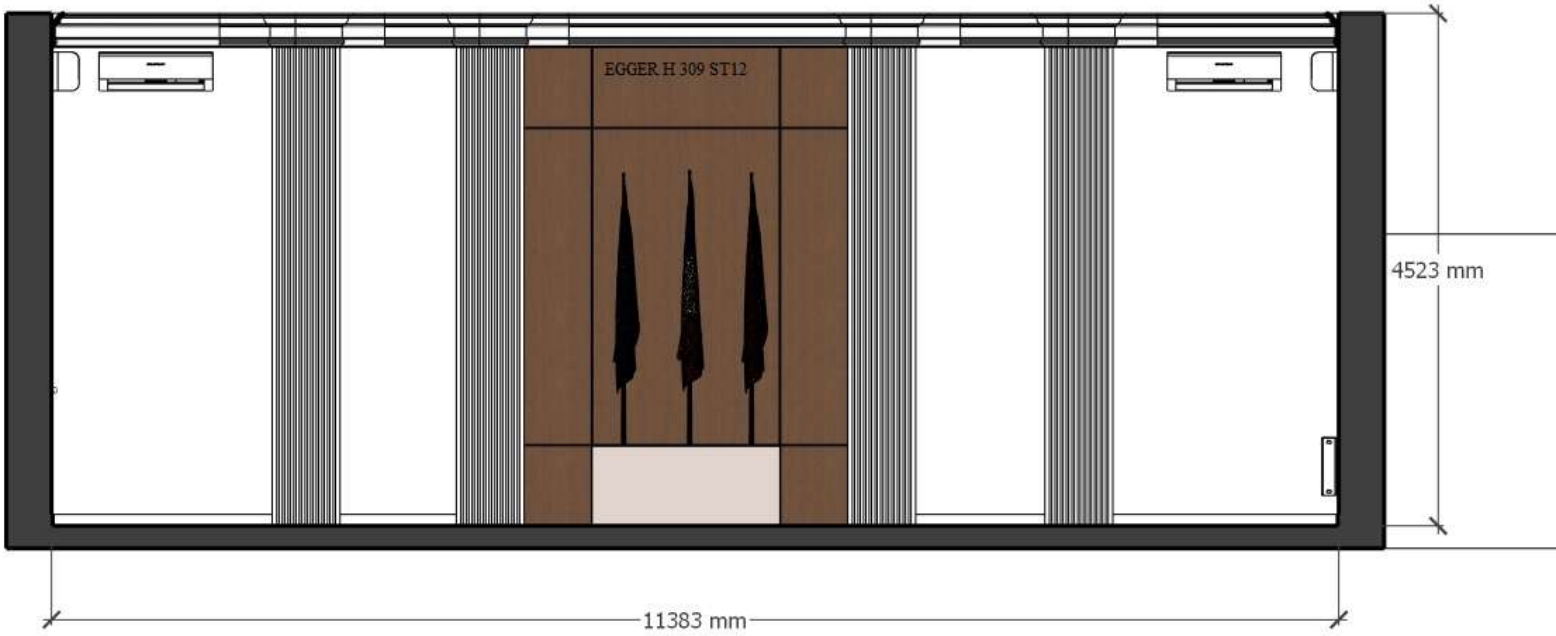
EGGER H 309 ST12
4523 mm
11383 mm

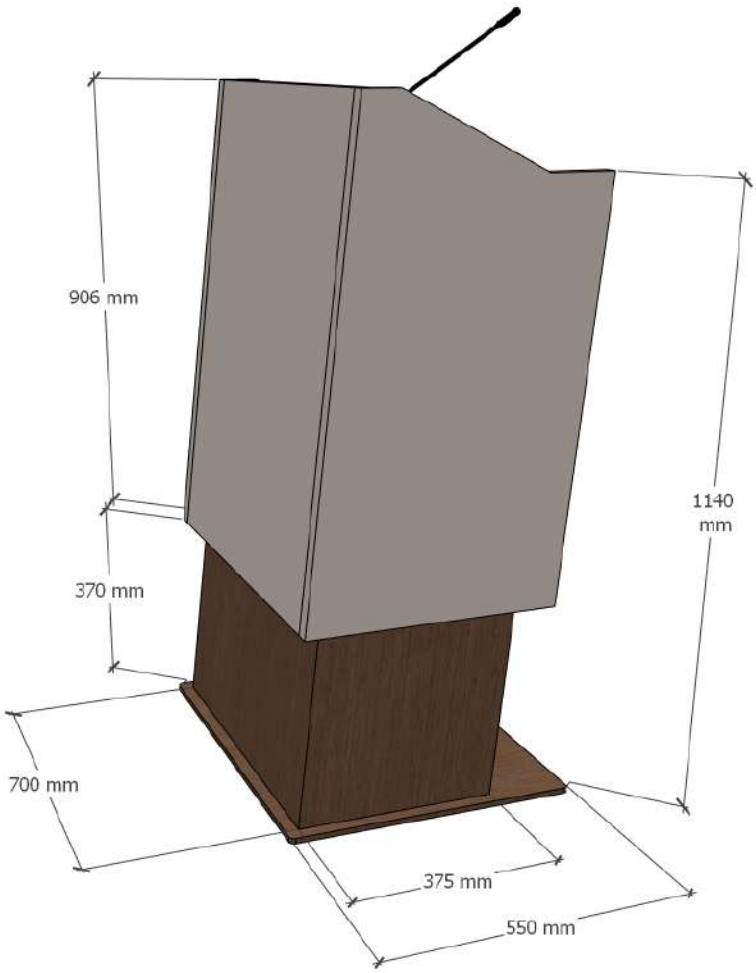
906 mm
370 mm
1140
mm
700 mm
375 mm
550 mm