Digitally signed by Bolea Petru
Date: 2021.09.26 08:09:02 EEST
Reason: MoldSign Signature
Location: Moldova

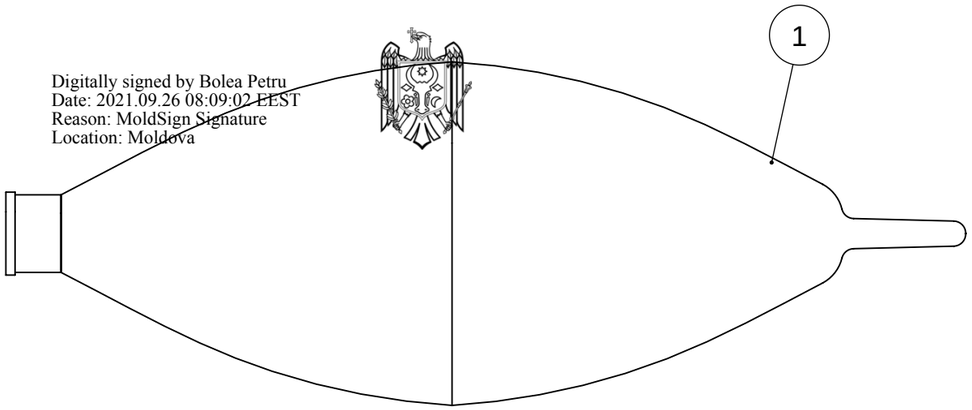

UNIT NO.	PART NUMBER	DESCRIPTION	QUANTITY
1	150.07.040	2 LT NEOPRENE SINGLE FOLDED BREATHING BAG WITH STICKER(RIGID PP CONNECTOR)	1
2	150.11.036	ELBOW CONNECTOR LUER CAP	1
3	151.03.001.01	22 MM STRAIGHT CONNECTOR	3
4	151.03.110	22-22MM STRAIGHT CONNECTOR	1
5	151.03.150	22 MM PARALLEL Y CONNECTOR PP	1
6	151.03.178.01	ELBOW CONNECTOR WITH CO2 PORT PP	1
7	151.03.264	Y CONNECTOR CAP (NEW)	2
8	151.05.01.062	22 MM CORRUGATED TUBING PE 180 CM CUT	2
9	151.05.01.074	22 MM CORRUGATED TUBING PE 150 CM CUT	1

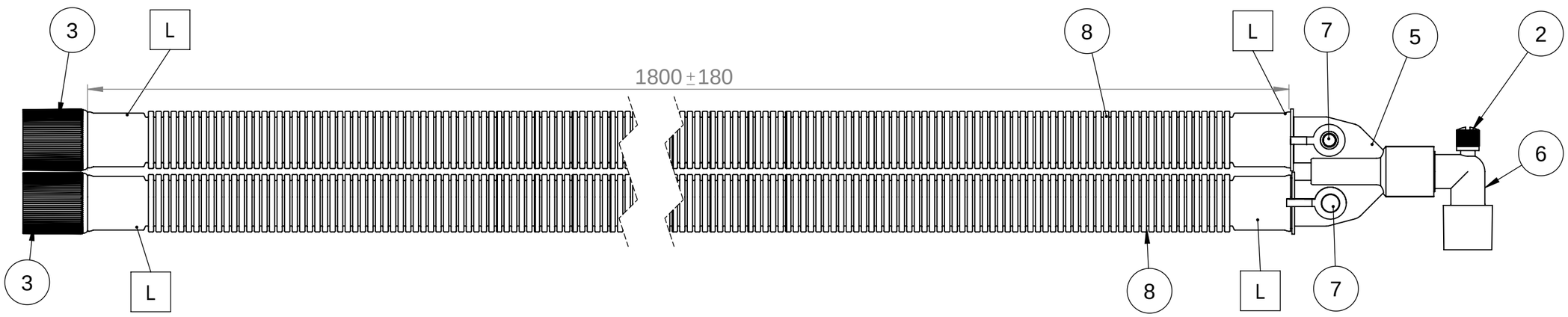

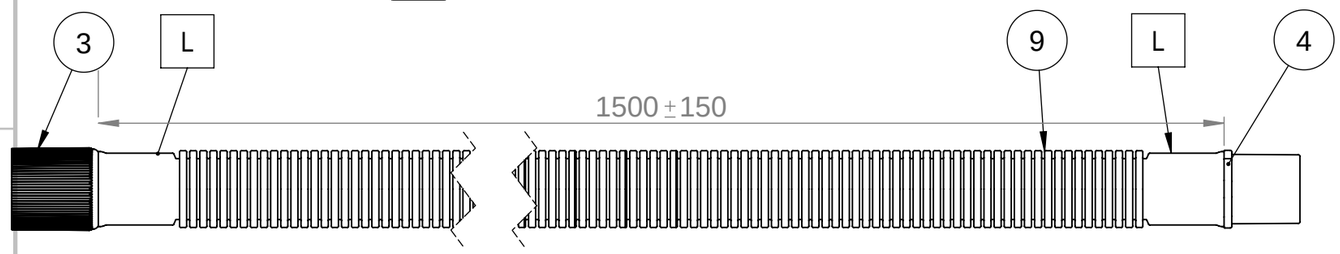

ANSI
X ISO

All dimensions are in millimeters

[h / ¢L¢9 офнн ¦ ± LOCTITE 3922 UV	UV
SOLVENT SOLVENT	S
%75 SOLVENT + %25 ALKOL %75 SOLVENT + %25 ALCOHOL	S+A
ALKOL ALCOHOL	A
LOCTITE LOCTITE	L
SKLKKON SKLKKON	Si

5 l]ÑY l-y]2Řdz\ \ŠØłÎè2y´y2 ØŠ \ŠØłÎè2y´ú l-\ÚKł
52ÔdzY´Šyů Ôz2ŘŠ\ \ŠØłăl2y´y2 l-yŘ \ŠØłăl2y´Řl-ůŠ
twhлс¢лоº¢лллº¢Смл w9±º¢лл óмс¢лоºнлнмú

! мπнмклстс úl-fŠLJ y2]l-LJăl-Y℗yŘl- ∃ÑyÖŠťťŠyŘłº					01	Samet ¥ zt¿rk	Ekrem Ama-
A-ēklamalar Notes					Revizyon no Revision no	Deĵ iktirme yapan Changed By	Onaylayan Approved
Genel Toleranslar Gen. Tolerances	¥l-ek Scale	1:2	Ad Name	ķnza Signature	Tarih Date	Meditera®	
N/A	Hazērlayan Prepared		Samet ¥ zt¿rk		9.04.2021		
	Onaylayan Approved		Ekrem Ama-		9.04.2021		
	Resim no Dwr.no		TD			Yayēn no Release no	¢5 ! [пммлмфπлслº±ллнψм
	Par-a Adē Part Name		.w9 ! ¢ l LbD /Lw/ ¦ L¢ ó{¢9wL[9 9hú			Yayēn tarihi Release date	18.01.2018
						Sheet / Sayfa 1	Total/Tamamē 1
	Par-a Kodu Part Code		AL-11019-060.V002			S. Boyutu Drw.Size	A3