Digitally signed by Bolocan Roman
Date: 2021.06.24 14:59:33 EEST
Reason: MoldSign Signature
Location: Moldova

Evolutis

CREATEUR FABRICANT

# Product Sheet
# Stemsys®
# Fiche Produit

**REVISION Distal locking / Verrouillage distal**
*Lengths* / Longueurs 210 *to*/à 240, 260(L) &/et 320mm(XL)
*Collared* / Avec collerette

**REVISION Slotted / Fendue**
*Lengths* / Longueurs 200 *to*/à 240mm
*Collared and collarless* / Avec ou sans colerette

**Primary Standard**
**1ère intention standard**
*Collared or collarless* / Avec ou sans collerette
HAP : *Lengths* / Longueurs 110 *to*/à 190mm
Porous Ti + HAP : *Lengths* / Longueurs 110 *to*/à 170mm

**Primary Lateralised**
**1ère intention Latéralisée**
*Collared or collarless* / Avec ou sans collerette
HAP : *Lengths* / Longueurs 130 *to*/à 190mm
Porous Ti + HAP: *Lengths* / Longueurs 120 *to*/à 170mm

**Primary cemented**
**1ère intention à cimenter**
135° *or*/ou 128°
*Lengths* / Longueurs 120 *to*/à 160mm (155mm lat.)
*Collarless* / Sans collerette

**Neck fracture gritblasted**
**Fracture du col corindonnée**
*Lengths* / Longueurs 115 *to*/à 190mm
*Collared* / Avec collerette

## *Femoral implants for THA and THR indications*

## Implants fémoraux pour indications de PTH et PTHR

Evolutis
MOTION INSIDE

www.evolutisfrance.com

# REFERENCES

## STEMSYS *Cementless* Sans ciment

| Lot 3, Lot 18 | *Cementless dual coating Porous Ti + HA* Double revêtement Ti + HA | | | | *Cementless HA coating* Hydroxyapatite | | | |
|---|---|---|---|---|---|---|---|---|
| | Standard | *Std Collared* Std à Coll. | *Lateralized* Latéralisé | *Lat Collared* Lat à coll. | Standard | *Std Collared* Std à Coll. | *Lateralized* Latéralisé | *Lat Collared* Lat à coll. |
| *size* /taille 7 | * H45 007 | | | | * H73 007 | | | |
| *size* /taille 8 | * H45 008 | * H45 C008 | | | * H73 008 | * H73 C008 | Lot 1 | |
| *size* /taille 9 | H45 009 | H45 C009 | H45 L009 | H45 LC009 | H73 009 | H73 C009 | H73 L009 | H73 LC009 |
| *size* /taille 10 | H45 010 | H45 C010 | H45 L010 | H45 LC010 | H73 010 | H73 C010 | H73 L010 | H73 LC010 |
| *size* /taille 11 | H45 011 | H45 C011 | H45 L011 | H45 LC011 | H73 011 | H73 C011 | H73 L011 | H73 LC011 |
| *size* /taille 12 | H45 012 | H45 C012 | H45 L012 | H45 LC012 | H73 012 | H73 C012 | H73 L012 | H73 LC012 |
| *size* /taille 13 | H45 013 | H45 C013 | H45 L013 | H45 LC013 | H73 013 | H73 C013 | H73 L013 | H73 LC013 |
| *size* /taille 14 | H45 014 | H45 C014 | H45 L014 | H45 LC014 | H73 014 | H73 C014 | H73 L014 | H73 LC014 |
| *size* /taille 15 | H45 015 | H45 C015 | H45 L015 | H45 LC015 | H73 015 | H73 C015 | H73 L015 | H73 LC015 |
| *size* /taille 16 | H45 016 | H45 C016 | H45 L016 | H45 LC016 | H73 016 | H73 C016 | H73 L016 | H73 LC016 |
| *size* /taille 18 | H45 018 | H45 C018 | H45 L018 | H45 LC018 | H73 018 | H73 C018 | H73 L018 | H73 LC018 |
| *size* /taille 20 | H45 020 | | H45 L020 | H45 LC020 | H73 020 | H73 C020 | H73 L020 | H73 LC020 |

## Fracture

| *Gritblasted* Corindonné | |
|---|---|
| *Std Collared* Std à Coll. | |
| LOT 1 | |
| size/taille 8 | ****H73 TC008 |
| size/taille 9 | ****H73 TC009 |
| size/taille 10 | ****H73 TC010 |
| size/taille 11 | ****H73 TC011 |
| size/taille 12 | ****H73 TC012 |
| size/taille 13 | ****H73 TC013 |
| size/taille 14 | ****H73 TC014 |
| size/taille 15 | ****H73 TC015 |
| size/taille 16 | ****H73 TC016 |
| size/taille 18 | ****H73 TC018 |
| size/taille 20 | ****H73 TC020 |

## *Cemented* A cimenter

| Lot 1, Lot 15 | *Shiny-Polished* Poli-Brillant | |
|---|---|---|
| | Std. | Lat. |
| size/taille 9 | H45 S009 | ** H45 SL009 |
| size/taille 10 | H45 S010 | H45 SL010 |
| size/taille 11 | H45 S011 | H45 SL011 |
| size/taille 12 | H45 S012 | H45 SL012 |
| size/taille 13 | H45 S013 | H45 SL013 |
| size/taille 14 | H45 S014 | H45 SL014 |
| size/taille 15 | H45 S015 | H45 SL015 |
| size/taille 16 | H45 S016 | H45 SL016 |
| size/taille 18 | H45 S018 | |

## STEMSYS Revision

| | *Split Collarless* Fendue sans Collerette | *Split Collared* Fendue à Collerette | *Distal Lock.* A verrouill. distal | L *Distal Lock.* A verrouill. | XL *Distal Lock.* A verrouill. |
|---|---|---|---|---|---|
| size/taille 10 | H45 R010 | H45 RC010 | | | |
| size/taille 12 | H45 R012 | H45 RC012 | H45 R112 | H45 R112L | H45 R112XL |
| size/taille 14 | H45 R014 | H45 RC014 | H45 R114 | | |
| size/taille 16 | H45 R016 | H45 RC016 | H45 R116 | | |
| size/taille 18 | H45 R018 | H45 RC018 | H45 R118 | | |
| size/taille 20 | H45 R020 | H45 RC020 | H45 R120 | | |

| *Locking screw* Vis de verrouillage | |
|---|---|
| ø6/4.5 lg.20 | H15 SC6020 |
| ø6/4.5 lg.25 | H15 SC6025 |
| ø6/4.5 lg.30 | H15 SC6030 |
| ø6/4.5 lg.35 | H15 SC6035 |
| ø6/4.5 lg.40 | H15 SC6040 |
| Lot 3, Lot 18 | |

## *Femoral Heads* Têtes Fémorales

| Description | *Size* Taille | Cat. N° | Description | *Size* Taille | Cat. N° |
|---|---|---|---|---|---|
| *Co-Cr* / Chrome-Cobalt | Ø28 -7mm | H10 1279 | *Composite* Ceramic Composite | Ø28 -3.5mm | H14 C1280 |
| *Co-Cr* / Chrome-Cobalt | Ø28 -3.5mm | H10 1280 | Composite Ceramic Composite | Ø28 +0mm | H14 C1281 |
| *Co-Cr* / Chrome-Cobalt | Ø28 +0mm | H10 1281 | *Composite* Ceramic Composite | Ø28 +3.5mm | H14 C1282 |
| *Co-Cr* / Chrome-Cobalt | Ø28 +3.5mm | H10 1282 | Composite Ceramic Composite | Ø32 -4mm | H14 C1320 |
| *Co-Cr* / Chrome-Cobalt | Ø28 +7mm | H10 1283 | *Composite* Ceramic Composite | Ø32 +0mm | H14 C1321 |
| *** *Co-Cr* / Chrome-Cobalt | Ø28 +10.5mm | H10 1284 | Composite Ceramic Composite | Ø32 +4mm | H14 C1322 |
| *Co-Cr* / Chrome-Cobalt | Ø32 -4mm | H10 1320 | *Composite* Ceramic Composite | Ø36 -4mm | H14 C1360 |
| *Co-Cr* / Chrome-Cobalt | Ø32 +0mm | H10 1321 | Composite Ceramic Composite | Ø36 +0mm | H14 C1361 |
| *Co-Cr* / Chrome-Cobalt | Ø32 +4mm | H10 1322 | *Composite* Ceramic Composite | Ø36 +4mm | H14 C1362 |
| *Co-Cr* / Chrome-Cobalt | Ø32 +8mm | H10 1323 | Composite Ceramic Composite | Ø40 -4mm | H14 C1400 |
| *Co-Cr* / Chrome-Cobalt | Ø36 -4mm | H10 1360 | *Composite* Ceramic Composite | Ø40 +0mm | H14 C1401 |
| *Co-Cr* / Chrome-Cobalt | Ø36 +0mm | H10 1361 | Composite Ceramic Composite | Ø40 +4mm | H14 C1402 |
| *Co-Cr* / Chrome-Cobalt | Ø36 +4mm | H10 1362 | | | |
| *Co-Cr* / Chrome-Cobalt | Ø36 +8mm | H10 1363 | | | |

Lot 3, Lot 15, Lot 18

* *not validated for patients exceeding 75kgs (165lbs)*
limite de poids patient à 75kgs

** *not validated for patients exceeding 80kgs (176lbs)*
limite de poids patient à 80kgs

*** *not validated for use with 128° NSA femoral stem*
non compatible avec une tige fémorale latéralisée à 128°

**** *indicated only for the femoral neck fracture at the elderly*
indiquée uniquement pour la fracture du col chez la personne agée

***STEMSYS instrumentation sets:***
*primary set, slotted revision set, and distal locking jig set.*
**Instrumentations STEMSYS :**
première intention, révision fendue, et viseur de verrouillage distal.

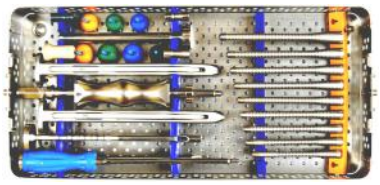
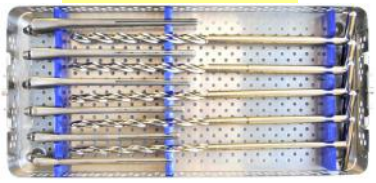
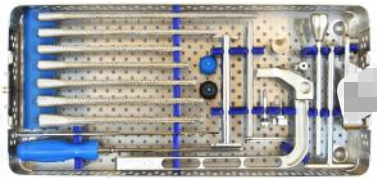

**Mentions légales :**
Les implants STEMSYS sont des dispositifs médicaux implantables de classe III indiqués pour les arthroplasties primaires totales (PTH) ou partielles (PIH) ou pour les révisions d'arthroplasties (PTHR) de la hanche selon la version.
Les implants STEMSYS sont pris en charge par l'assurance maladie sous certaines conditions. informations sur le site *www.ameli.fr.*
Le chirurgien est expressément invité à lire attentivement les instructions mentionnées sur la notice d'utilisation incluse dans le conditionnement du DMI, ainsi que dans le manuel de technique opératoire délivré à la mise en place du produit ou disponible en téléchargement sur le site www.evolutisfrance.com.

***Materials* / Matériaux :**
*Cementless stems: Titanium alloy TA6V according ISO5832-3 + gritblasted or Calcium Hydroxyapatite or T40 titanium + Calcium Hydroxyapatite*
*Cemented stems: High nitrogen content stainless steel according ISO5832-9*
*Femoral heads: Co-Cr according ISO5832-12 or Pure alumina according ISO6474-1 or Composite Ceramic according ISO6474-2*
*Vacuum packaging. Gamma ray sterilised*
Tiges sans ciment : Alliage de titane TA6V selon ISO5832-3 + corindonné ou Hydroxyapatite ou plasma titane T40 et Hydroxyapatite
Tiges cimentées : Acier inox à haute teneur en azote selon ISO5832-9
Têtes fémorales : Cr-Co selon ISO5832-12 ou Alumine pure selon ISO6474-1 ou Céramique composite selon ISO6474-2
Conditionnement sous vide. Stérilisation gamma.


CE Evolutis
Avenue de la Libération, 42720 Briennon, France
0086 Tel : +33. (0)477.60.79.99 – Fax : +33. (0)477.60.79.90


Designed and Manufactured in France
www.evolutisfrance.com


Dec 2017 / Réf. : BI_STEMSYS FP H46 (H46 432)

Evolutis
CREATEUR FABRICANT

Bi-polar cup for hip hemi-plasty.
Positive offset for enhanced stability. (anti-capsizing)

Bi-polar cup with locking ring

Snap in Bi-polar cup

**Dislocation avoidable ( daN.m)**

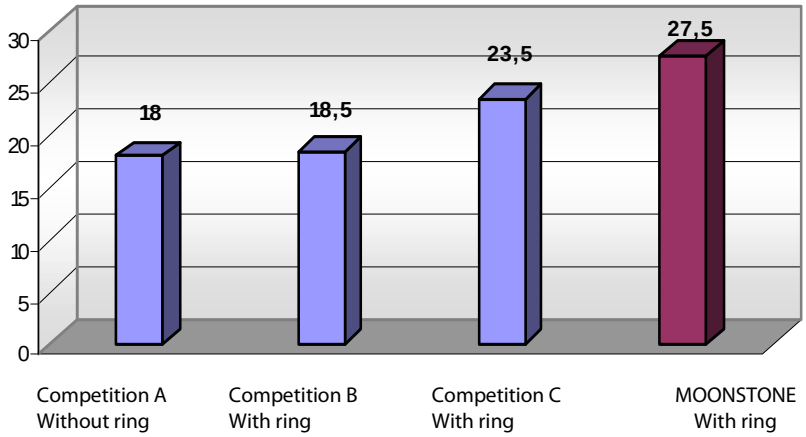


MOONSTONE ®

*Bi - polar cup with or without ring*

Evolutis

CREATEUR FABRICANT

| CUP WITH RING | |
|---|---|
| Ref. | Lot 1 Description |
| H35 2239 | Ø39 for head 22 mm |
| H35 2241 | Ø41 for head 22mm |
| H35 2243 | Ø43 for head 22mm |
| H35 2245 | Ø45 for head 22mm |
| H35 2843 | Ø43 for head 28mm |
| H35 2845 | Ø45 for head 28mm |
| H35 2847 | Ø47 for head 28mm |
| H35 2849 | Ø49 for head 28mm |
| H35 2851 | Ø51 for head 28mm |
| H35 2853 | Ø53 for head 28mm |
| H35 2855 | Ø55 for head 28mm |
| H35 2857 | Ø57 for head 28mm |
| H35 2859 | Ø59 for head 28 mm |

Even sizes available on request

| CUP WITHOUT RING | |
|---|---|
| Ref. | Description |
| H35 R2843 | diam 43 for head 28 mm |
| H35 R2845 | diam 45 for head 28 mm |
| H35 R2847 | diam 47 for head 28 mm |
| H35 R2849 | diam 49 for head 28 mm |
| H35 R2851 | diam51 for head 28 mm |
| H35 R2853 | diam 53 for head 28 mm |
| H35 R2855 | diam 55 for head 28 mm |
| H35 R2857 | diam57 for head 28 mm |
| H35 R2859 | diam 59 for head 28 mm |

| INSTRUMENTATION FOR RING CUP | |
|---|---|
| Ref. | Description |
| S01 006 | Ring forceps |

| INSTRUMENTS CUP WITHOUT RING | |
|---|---|
| Ref | Description |
| H52 033 | Inlay press |
| H52 030 | Inlay press a screw |
| H52 035 | Mobile inlay impactor |
| H52 031 | Pushing nozzle |

| INSTRUMENT SETS | |
|---|---|
| Ref. | Description |
| H36 001 | Head mesurement |
| H36 002 | Cup impactor nozzle |
| H01 023 | Cup impactor handle |
| H36 003 | Measurement sheet |

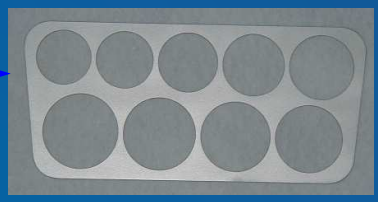

**Material** : UHMWPE in compliance with ISO5834-1 and 2
316 L stainless steel in compliance with ISO5832-1.

**Packaging**: vacuum packed and gamma ray sterilized.

www.evolutisfrance.com

Avenue de la Libération - 42720 BRIENNON - tél: +33 (0)4 77 60 79 99 - fax: +33 (0)4 77 60 79 90

REF H36 521 –06/11

CE 0499

www.evolutisfrance.com

# Evolutis

CREATEUR FABRICANT

## Freeliner®

## Acetabular cup for Ceramic or Highly-Crosslinked PEXEL® -E Polyethylene liner

*Cupule acétabulaire à insert Céramique ou Polyéthylène Hautement Réticulé PEXEL® -E*

Evolutis
MOTION INSIDE

The **FREELINER®** acetabular cup for Total Hip Arthroplasty is designed for cementless fixation to the bone, and enable 3 choices of friction bearing:
• moderately crosslinked PEXEL® polyethylene against a metal or a ceramic head,
• highly-crosslinked polyethylene with vitamin-E (PEXEL®-E) against a metal or a ceramic head,
• ceramic composite against a ceramic composite head.
The **FREELINER®** cup has been designed to ensure maximum safety during implantation and security for the patient when used with either polyethylene or ceramic liners. The cup is uncompromisingly adapted to the different characteristics of these 2 bearings:
• the inner surface of the taper is smooth and free of asperities to facilitate and secure the insertion of the ceramic insert,
• the stability of the polyethylene insert is secured by 10 anti-rotational spurs and a locking ring situated on the equator.

*La cupule acétabulaire **FREELINER®** est un composant de prothèse totale de hanche destiné à une fixation osseuse sans ciment, et compatible au choix avec 3 couples de frottement :*
*• polyéthylène PEXEL® modérément réticulé avec métal ou céramique,*
*• polyéthylène vitaminé-E hautement réticulé (Pexel®-E) avec métal ou céramique,*
*• céramique composite avec céramique composite.*
***FREELINER®** a été conçue pour assurer le maximum de sécurité de mise en place et d'usage qu'elle soit associée avec un insert polyéthylène ou un insert céramique. La cupule a été adaptée aux caractéristiques propres à chacun des couples de frottement :*
*• L'intégrité de la portée conique a été préservée pour sécuriser la mise en place et la fixation de l'insert céramique.*
*• La stabilité des inserts en polyéthylène est sécurisée par 10 ergots anti-rotation et un bourrelet de clippage situé en avant de la portée conique.*

- Choice of 3 friction bearings
- Primary stability enhanced by the high roughness of the coating
- Osseo-integration on highly porous substrate (40 to 70%)
- Safety and reproducibility of the surgical technique

- *Choix parmi 3 couples de frottement*
- *Stabilité primaire induite par la rugosité de surface du revêtement*
- *Ostéointégration secondaire sur substrat hautement poreux (40 à 70%)*
- *Sécurité et reproductibilité de la technique d'implantation*

### Moderately crosslinked PEXEL® polyethylene

- Moderately crosslinked at 40kGy max.
- VacUpac vacuum packaging
- Anti-dislocation 6mm Posterior wall
- Anterior chamfer of 32°
- Inner Ø28mm

### *Polyéthylène modérément réticulé PEXEL®*

*- Réticulation modérée à 40kGy max.*
*- Conditionnement sous vide VacUpac*
*- Mur postérieur anti-luxation de 6mm*
*- Chanfrein antérieur de 32°*
*- Ø interne 28mm*

### Ceramic *(Composite of Alumina and Zirconia)*

- Composite of alumina and zirconia ceramic
- New SLWZero design with constant radius
- Center of rotation aligned with the equator of the liner
- Liner protected from "chipping" by the peripheral border on the cup
- Inner Ø32, 36, and 40mm

### *Céramique (composite d'alumine et zircone)*

*- Composite d'alumine et de zircone*
*- Nouveau profil SLWZero à rayon constant*
*- Centre de rotation positionné sur l'équateur*
*- insert protégé de l'écaillage ("chipping") par le rebord périphérique de la cupule*
*- Ø interne 32, 36, et 40mm*

### Highly-crosslinked PEXEL®-E polyethylene with vitamin-E

- Sequentially crosslinked UHMWPE at 100kGy max.
- VacUpac vacuum packaging
- Oxydation inhibited by content of 0.1%wt of α-tocopherol (vitamin-E) blended in the material before compression molding
- with circumferential chamfer of 20°
- Inner Ø32 and 36mm

### *Polyéthylène PEXEL®-E hautement réticulé à la vitamine-E*

*- UHMWPE réticulé séquentiellement à 100kGy max.*
*- Conditionnement sous vide VacUpac*
*- Inhibition de l'oxydation par adjonction de 0,1%wt de α-tocopherol (vitamine-E) dans la poudre avant consolidation par pressage à chaud (compression molding)*
*- Inserts sans débord avec chanfrein circonférentiel de 20°*
*- Ø interne 32 et 36mm*

| Cup Ø<br>*Ø Cup.* | PEXEL<br>*PEXEL* | PEXEL-E<br>*PEXEL-E* | | Ceramic<br>*Ceramique* | |
|---|---|---|---|---|---|
| 44 (*) | 28 (*) | | | | |
| 46 | 28 | 32 | | 32 | |
| 48 | 28 | 32 | | 32 | |
| 50 | 28 | 32 | 36 | 36 | |
| 52 | 28 | 32 | 36 | 36 | |
| 54 | 28 | 32 (*) | 36 | 36 | 40 |
| 56 | 28 | 32 (*) | 36 | 36 | 40 |
| 58 | 28 | 32 (*) | 36 | 36 | 40 |
| 60 | 28 | 32 (*) | 36 | 36 | 40 |
| 62 | 28 | 32 (*) | 36 | 36 | 40 |
| 64 (*) | 28 (*) | 32 (*) | 36 (*) | 36 (*) | 40 (*) |
| 66 (*) | 28 (*) | 32 (*) | 36 (*) | 36 (*) | 40 (*) |

Table: diameters and materials of available friction couples according to the diameter of the shell.
*Tableau : diamètres et matériaux des couples de frottement disponibles en fonction du diamètre de la cupule.*
(*): References available only on special request
*Références disponibles sur demande spéciale*

Freeliner® PEXEL 28 | Freeliner® PEXEL-E 32 | Freeliner® PEXEL-E 36 | Freeliner® Ceramic 36

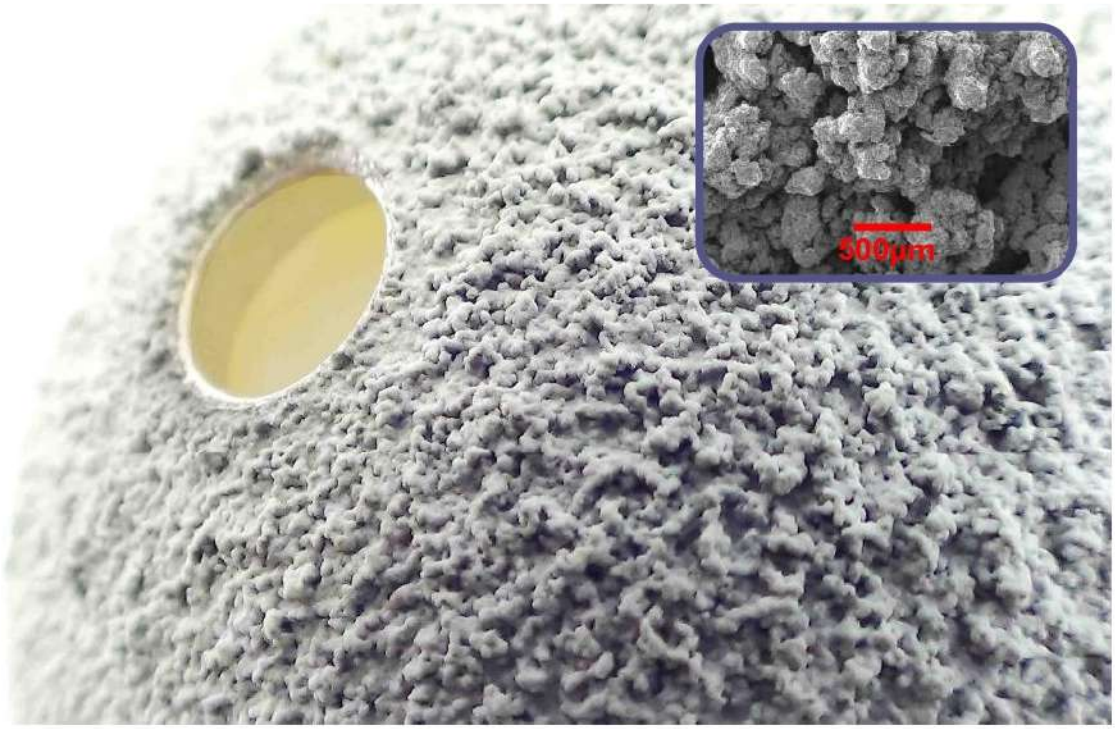


Hemispheric cup
Primary stability through a plasma spray high rough grade porous coating
Dimensional press-fit from 1.26 to 1.66mm according to the diameter of the cup
Optional complementary fixation with screws (Ø6.0 cancellous self-tapping):
- 4 holes in the superior part of the cup on a constant bow of 120°
- angular clearance of 20° for the screws

Cementless osseo-integration coating:
- 80µm of calcium hydroxyapatite
- 400 to 600µm of porous titanium

*Cupule hémisphérique*
*Accroche primaire par revêtement poreux à haute rugosité*
*Press-fit dimensionnel de 1,26 à 1,66mm selon le diamètre de la cupule*
*Complément de fixation par vissage Ø6mm à profil spongieux autotaraudant :*
*- 4 trous de vis orientés dans le toit du cotyle sur un arc constant de 120°*
*- amplitude de débattement angulaire des vis de 20°.*
*Revêtement pour fixation secondaire sans ciment :*
*- 80µm d'hydroxyapatite de calcium*
*- 400 à 600µm de titane poreux*

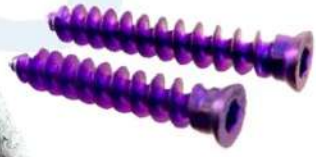

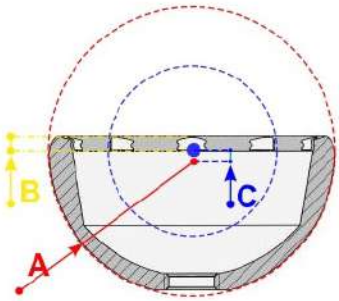


| Reference diameter *Diamètre de référence* | True diameter *Diamètre réel* A | Total Press-Fit *total* | Equatorial lip *Bord équatorial* B | Offset C | *Revêtement* T40 Coating | *Revêtement* HAP *Coating* |
|---|---|---|---|---|---|---|
| Ø44 | 45,26 | 1,26 | 2,6 | 1 | 400µm | 80µm |
| Ø46 | 47,46 | 1,46 | 2,6 | 1 | 500µm | 80µm |
| Ø48 | 49,66 | 1,66 | 2,6 | 0 | 600µm | 80µm |
| Ø50 | 51,66 | 1,66 | 2,6 | 1 | 600µm | 80µm |
| Ø52 | 53,66 | 1,66 | 2,6 | 0 | 600µm | 80µm |
| Ø54 | 55,66 | 1,66 | 2,6 | 1 | 600µm | 80µm |
| Ø56 | 57,66 | 1,66 | 2,6 | 0 | 600µm | 80µm |
| Ø58 | 59,66 | 1,66 | 2,6 | 0 | 600µm | 80µm |
| Ø60 | 61,66 | 1,66 | 2,6 | 0 | 600µm | 80µm |
| Ø62 | 63,66 | 1,66 | 2,6 | 0 | 600µm | 80µm |
| Ø64 | 65,66 | 1,66 | 2,6 | 0 | 600µm | 80µm |
| Ø66 | 67,66 | 1,66 | 2,6 | 0 | 600µm | 80µm |

**Table**: reference and true dimensions, press-fit value, offset of rotation center, and coating thicknesses for each size of Freeliner cup.
***Tableau :*** *dimensions de référence et réelles, valeur du press-fit, offset du centre de rotation, et épaisseurs de revêtement pour chaque diamètre de cupule Freeliner.*

The FREELINER® cup includes a 2.6mm peripherical rim meant for:
- preventing the stem neck from impinging on the inner edge of the ceramic liner,
- securing the fixation of the PEXEL® and PEXEL®-E liners while preserving the integrity of the conical seating.

*La cupule FREELINER® intègre un rebord équatorial de 2,6mm dont la fonction est double :*
*- empêcher le contact entre le col de la tige et le bord de l'insert céramique,*
*- maintenir et orienter les inserts PEXEL® et PEXEL®-E tout en évitant d'altérer la portée conique dans la cupule.*

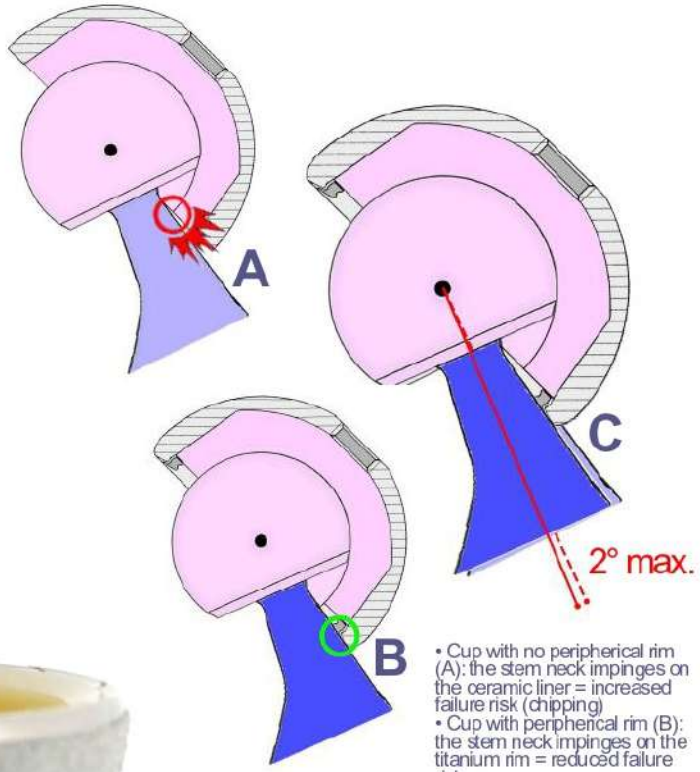


• Cup with no peripherical rim (A): the stem neck impinges on the ceramic liner = increased failure risk (chipping)
• Cup with peripherical rim (B): the stem neck impinges on the titanium rim = reduced failure risk
• Comparison (C): less than 2° of ROM reduction

*• Cupule sans rebord équatorial (A) : contact col de tige sur céramique = risque accru de faillite sur "écaillage" (chipping)*
*• Cupule avec rebord équatorial (B) : contact col de tige sur cupule = risque d'écaillage réduit*
*• Comparaison (C) : réduction du débattement inférieure à 2°*

# Safety & Reproducibility*

**Sécurité et Reproductibilité de la technique d'implantation*

The instrumentation of the FREELINER® cup allows the operator to pre-impact the liner on the table BEFORE introducing it into the patient's acetabulum. This possibility helps to control the axis of introduction of the liner into the cup, to make sure the fixation taper is clean and dry, and to easily calibrate the impaction force.
This surgical protocol which is specific to the FREELINER® cup has been developped in accordance with the Safety Reminder of the ceramic material manufacturer [1] which recommends to:
• make sure that the acetabular cup and the ceramic insert are clean dry and not damaged,
• carefully assemble the components,
• confirm proper assembly and then impact,

*L'instrumentation de la cupule FREELINER® permet de pré-impacter l'insert céramique dans la cupule AVANT sa mise en place dans le cotyle du patient. Ceci garantit une surface de fixation propre et sèche à l'interface des 2 pièces, et facilite la mise en place de l'insert dans l'axe de la cupule et le dosage de son impaction.*
*Ce protocole opératoire spécifique à la cupule FREELINER® est conforme aux recommandations (Safety Reminder [1]) éditées par le fabricant du matériau céramique qui conseillent :*
*• de s'assurer que la cupule et l'insert céramique sont propres, secs et non abîmés,*
*• d'assembler les composants avec attention et de verifier au doigt leur alignement,*
*• de confirmer le bon positionnement, puis d'impacter dans l'axe de la cupule.*

**[1]** *Safety Reminder / Biolox inserts. Ceramtec GmbH, Medical Products Division, D-73207 Plochingen, Germany. August 2014.*
*http://www.ceramtec.com/files/mt_safety_reminder_inserts_en.pdf*

Lot 3, Lot 18

# Freeliner®

| Ref. Cup. | | Ref. Liner Ø28 UHMWPE "PEXEL" | Ø32 XLPE "PEXEL-E" | Ø36 XLPE "PEXEL-E" | Ø32 CERAMIC | Ø36 CERAMIC | Ø40 CERAMIC |
|---|---|---|---|---|---|---|---|
| H75 4438(*) | FREELINER cup/cupule Ø44 | H75 P3628(*) | | | | | |
| H75 4640 | FREELINER cup/cupule Ø46 | H75 P4028 | H75 XE4032 | | H75 C4032 | | |
| H75 4840 | FREELINER cup/cupule Ø48 | | | | | | |
| H75 5044 | FREELINER cup/cupule Ø50 | H75 P4428 | H75 XE4432 | H75 XE4436 | | H75 C4436 | |
| H75 5244 | FREELINER cup/cupule Ø52 | | | | | | |
| H75 5448 | FREELINER cup/cupule Ø54 | H75 P4828 | H75 XE4832(*) | H75 XE4836 | | H75 C4836 | H75 C4840 |
| H75 5648 | FREELINER cup/cupule Ø56 | | | | | | |
| H75 5850 | FREELINER cup/cupule Ø58 | H75 P5028 | H75 XE5032(*) | H75 XE5036 | | H75 C5036 | H75 C5040 |
| H75 6050 | FREELINER cup/cupule Ø60 | | | | | | |
| H75 6254 | FREELINER cup/cupule Ø62 | | | | | | |
| H75 6454(*) | FREELINER cup/cupule Ø64 | H75 P5428 | H75 XE5432(*) | H75 XE5436 | | H75 C5436 | H75 C5440 |
| H75 6654(*) | FREELINER cup/cupule Ø66 | | | | | | |

(*): References available only on special request
*Références disponibles sur demande spéciale*

A colour code (red, yellow, blue, orange, green, pink) facilitates the cup and liner size match. Example for a 58mm cup, the colour code is "green": once the material and the inner diameter are selected, choose the corresponding liner along the green line.

*Un code couleur (rouge, jaune, bleu, orange, vert, rose) facilite la correspondance entre la cupule et l'insert. Exemple pour une cupule de diamètre 58, il faudra sélectionner l'insert identifié par une couleur "verte" dans le frottement et le diamètre de couple souhaité.*

## Acetabular screw / *vis à cotyle*

| | Length *Longueur* | Ref. |
|---|---|---|
| Ø6.0 Screw/Vis | 20 mm | H15 SB6020 |
| Ø6.0 Screw/Vis | 25 mm | H15 SB6025 |
| Ø6.0 Screw/Vis | 30 mm | H15 SB6030 |
| Ø6.0 Screw/Vis | 35 mm | H15 SB6035 |
| Ø6.0 Screw/Vis | 40 mm | H15 SB6040 |
| Ø6.0 Screw/Vis | 45 mm | H15 SB6045 |
| Ø6.0 Screw/Vis | 50 mm | H15 SB6050 |

Evolutis MOTION INSIDE

**Material / Matériau**
Cup: TA6V titanium alloy according ISO 5832-3. Porous titanium and Calcium hydroxyapatite coating
*Screw:* TA6V titanium alloy according ISO 5832-3
*Liner:* UHMWPE according ISO 5834-1 and 2, or Composite Ceramic according ISO 6474-2
Packaging: vacuum packed and gamma ray sterilized
*Cupule : alliage de titane TA6V selon ISO 5832-3. Revêtement bicouche Titane poreux et HAC*
*Vis : alliage de titane TA6V selon ISO 5832-3*
*Insert : UHMWPE selon ISO 5834-1 et 2 ou Céramique composite selon ISO 6474-2*
*Conditionnement : emballage sous vide. Stérilisation rayons gamma.*

**Mentions légales**
Les implants FREELINER sont des dispositifs médicaux implantables de classe III indiqués pour les arthroplasties primaires totales (PTH) de la hanche.
Les implants FREELINER sont pris en charge par l'assurance maladie sous certaines conditions. Pour plus de précision, merci de vous rendre sur le site www.ameli.fr.
Le chirurgien est expressément invité à lire les instructions mentionnées sur la notice d'utilisation incluse dans le conditionnement du DMI, ainsi que le manuel de technique opératoire délivré à la mise en place du produit ou disponible en téléchargement sur le site www.evolutisfrance.com.

CE 0086 Evolutis
Avenue de la Libération, 42720 Briennon, France
Tel : +33. (0)477.60.79.99 – Fax : +33. (0)477.60.79.90

Designed and Manufactured in France

www.evolutisfrance.com

Dec 2017 / Réf. : BL_FREELINER DOC H76 (H76 430)
Numéro de référencement : 1507/EVOLUTIS/PM/001

www.evolutisfrance.com

Evolutis

CREATEUR FABRICANT

Product Sheet

# CAPITOLE®

Fiche Produit

## Dual Mobility acetabular Cup for primary and revision indications

## Cupule acétabulaire à double mobilité pour arthroplastie primaire ou de révision

Evolutis MOTION INSIDE

# References

## CAPITOLE dual mobility acetabular cup
*Cupule acétabulaire à double mobilité CAPITOLE*

| Shell ø *Cupule* | Press-fit I | 2 pegs T *2 plots T* | Cemented C *Cimenté C* | Revision R | Revision RA |
|---|---|---|---|---|---|
| ø45 | H51 I245 | H51 T245 | H51 C045 | - | - |
| ø47 | H51 I247 | H51 T247 | H51 C047 | H51 R247 | H51 RA247 |
| ø49 | H51 I249 | H51 T249 | H51 C049 | H51 R249 | H51 RA249 |
| ø51 | H51 I251 | H51 T251 | H51 C051 | H51 R251 | H51 RA251 |
| ø53 | H51 I253 | H51 T253 | H51 C053 | H51 R253 | H51 RA253 |
| ø55 | H51 I255 | H51 T255 | H51 C055 | H51 R255 | H51 RA255 |
| ø57 | H51 I257 | H51 T257 | H51 C057 | H51 R257 | H51 RA257 |
| ø59 | H51 I259 | H51 T259 | H51 C059 | H51 R259 | H51 RA259 |
| ø61 | H51 I261 | H51 T261 | H51 C061 | H51 R261 | H51 RA261 |
| ø63 | H51 I263 | H51 T263 | | H51 R263 | H51 RA263 |
| ø65 | - | - | | H51 R265 | - |

## CAPITOLE dual mobility liner
*Insert à double mobilité CAPITOLE*

| Liner ø *Insert* | Inner ø *Interne* 22.2 PE | Inner ø *Interne* 28 PE | Inner ø *Interne* 28 Ceramic |
|---|---|---|---|
| ø45 | H51 M2245 | - | - |
| ø47 | H51 M2247 | H51 M2847 | - |
| ø49 | H51 M2249 | H51 M2849 | - |
| ø51 | H51 M2251 | H51 M2851 | H61 MA2850 |
| ø53 | H51 M2253 | H51 M2853 | H61 MA2852 |
| ø55 | H51 M2255 | H51 M2855 | H61 MA2854 |
| ø57 | H51 M2257 | H51 M2857 | H61 MA2856 |
| ø59 | H51 M2259 | H51 M2859 | H61 MA2858 |
| ø61 | H51 M2261 | H51 M2861 | H61 MA2860 |
| ø63 | H51 M2263 | H51 M2863 | - |
| ø65 | H51 M2265 | H51 M2865 | - |

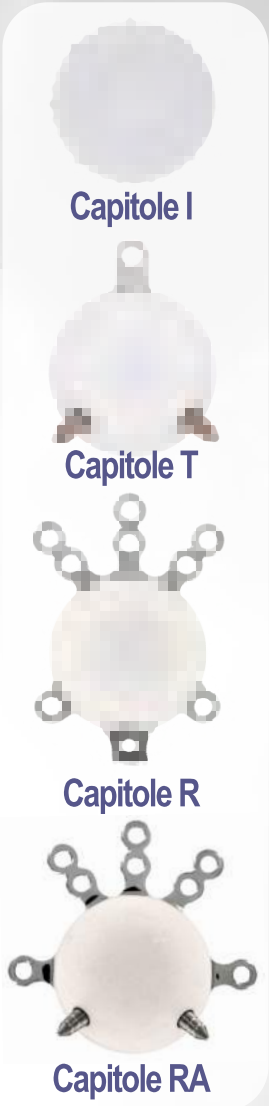


## Screws and Pegs
*Vis et plots*

| Description | ø (mm) | L. (mm) | Cat N° |
|---|---|---|---|
| Cortical screw / *Vis corticale* | 5 | 35 | H16 S5035 |
| Cortical screw / *Vis corticale* | 5 | 40 | H16 S5040 |
| Cortical screw / *Vis corticale* | 5 | 45 | H16 S5045 |
| Cortical screw / *Vis corticale* | 5 | 50 | H16 S5050 |
| Cortical screw / *Vis corticale* | 5 | 55 | H16 S5055 |
| Cortical screw / *Vis corticale* | 5 | 60 | H16 S5060 |
| Tripode pegs (set of 2) *Plots Tripode (par 2)* | 7 | 15 | H51 P2715 |

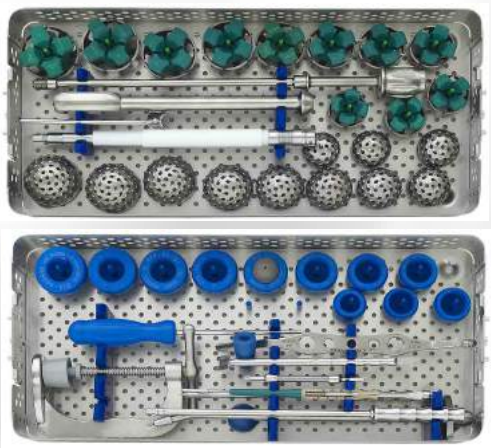

*Instrumentation CAPITOLE H52 9100*

**Mentions légales :**
Les implants CAPITOLE sont des dispositifs médicaux implantables de classe III indiqués pour les arthroplasties primaires totales (PTH) ou en révision (PTHR) de la hanche selon la version.
Les implants CAPITOLE sont pris en charge par l'assurance maladie.Informations sur www.ameli.fr.
Le chirurgien est expressément invité à lire attentivement les instructions mentionnées sur la notice d'utilisation incluse dans le conditionnement du DMI, ainsi que le manuel de technique opératoire délivré à la mise en place du produit ou disponible en téléchargement sur le site www.evolutisfrance.com.

***Materials* / Matériaux :**
*Cups: High Nitrogen Content Stainless steel according ISO 5832-9 coated with porous T40 and Calcium Hydroxyapatite*
*Liners: UHMWPE according ISO 5834-1 & 2*
*Screws: Stainless steel according ISO 5832-1*
*Pegs: titanim alloy (TA6V) according ISO 5832-3*
*Packaging: Sterilized under Gamma irradiation, VacUpac packaging*
Cupules : Acier inoxydable à Haute Teneur en Azote selon ISO 5832-9 revêtu T40 poreux et Hydroxyapatite
Inserts : UHMWPE selon ISO 5834-1 et 2
Vis : Acier inoxydable selon ISO 5832-1
Plots : alliage de titane (TA6V) selon ISO 5832-3
Conditionnement : Stérilisé sous rayonnement Gamma, conditionnement VacUpac


CE 0499 Evolutis
Avenue de la Libération, 42720 Briennon, France
Tel : +33. (0)477.60.79.99 – Fax : +33. (0)477.60.79.90


Designed and Manufactured in France

www.evolutisfrance.com


Mars 2016 / Ref: BI_CAPITOLE DM FP H52 (H52 430)

www.evolutisfrance.com

Evolutis

CREATEUR FABRICANT

*Product Sheet*

# Hactiv® Reactiv™ Cemtiv®

Fiche Produit

## Implant fémoral autostable

Première intention et révision

## *Self-blocking femoral implant*

*Primary and revision indications*

Evolutis
MOTION INSIDE

Refereences

# Implants HACTIV® / CEMTIV® / REACTIV™ *Implants*

| | Standard 135° première intention *Primary Standard 135°* | | | Latero-varus 128° première intention *Primary Latero-varus 128°* | | Standard 135° Révision Revision Standard 135° | | | |
|---|---|---|---|---|---|---|---|---|---|
| | HAP | à colerette Collared HAP | Cimenté *Cemented* | HAP | à colerette *Collared* HAP | Fendue *Slotted* | Fendue à colerette *Slotted Collared* | Verrouillage Distal *Distal Locking* | A Colerette Cimenté *Collared Cemented* |
| Taille / *Size* 7 | H49 007 (1)(2) | NA | NA | NA | NA | NA | NA | NA | NA |
| Taille / *Size* 8 | H49 008 (1)(2) | NA | NA | NA | NA | NA | NA | NA | NA |
| Taille / *Size* 9 | H49 009 | H49 C09 | H49 S09 | H49 L009 | H49 LC09 | NA | NA | NA | NA |
| Taille / *Size* 10 | H49 010 | H49 C10 | H49 S10 | H49 L010 | H49 LC10 | NA | NA | NA | NA |
| Taille / *Size* 11 | H49 011 | H49 C11 | H49 S11 | H49 L011 | H49 LC11 | NA | NA | NA | NA |
| Taille / *Size* 12 | H49 012 | H49 C12 | H49 S12 | H49 L012 | H49 LC12 | H49 R012 | H49 RC012 | H49 RC112 | H49 SRC012 |
| Taille / *Size* 13 | H49 013 | H49 C13 | H49 S13 | H49 L013 | H49 LC13 | NA | NA | NA | NA |
| Taille / *Size* 14 | H49 014 | H49 C14 | H49 S14 | H49 L014 | H49 LC14 | H49 R014 | H49 RC014 | H49 RC114 | H49 SRC014 |
| Taille / *Size* 15 | H49 015 | H49 C15 | H49 S15 | H49 L015 | H49 LC15 | NA | NA | NA | NA |
| Taille / *Size* 16 | H49 016 | H49 C16 | H49 S16 | H49 L016 | H49 LC16 | H49 R016 | H49 RC016 | H49 RC116 | H49 SRC016 |
| Taille / *Size* 18 | H49 018 | H49 C18 | NA | H49 L018 | H49 LC18 | H49 R018 | H49 RC018 | H49 RC118 | H49 SRC018 |
| Taille / *Size* 20 | H49 020 | H49 C20 (1) | NA | H49 L020 (1) | H49 LC20 (1) | H49 R020 | H49 RC020 | H49 RC120 | H49 SRC020 |

Lot 4

## Têtes fémorales *Femoral Heads*

| Diamètre *Diameter* | Longueur *Length* | Acier Inox *Stainless steel* | Chrome-Cobalt *Cobalt-Chromium* | Céramique Composite *Composite Ceramic* |
|---|---|---|---|---|
| Ø22 | -2.0mm | H11 1220 | H10 1220 | - |
| | +0mm | H11 1221 | H10 1221 | - |
| | +2.0mm | H11 1222 | H10 1222 | - |
| Lot 1, Lot 4 | -7mm | H11 1279 (1) | H10 1279 (1) | - |
| Ø28 | -3.5mm | H11 1280 | H10 1280 | H14 C1280 |
| | +0mm | H11 1281 | H10 1281 | H14 C1281 |
| | +3.5mm | H11 1282 | H10 1282 | H14 C1282 |
| | +7mm | H11 1283 | H10 1283 | - |
| | +10.5mm | - | H10 1284 (1)(3) | - |
| Ø32 | -4mm | H11 1320 | H10 1320 | H14 C1320 |
| | +0mm | H11 1321 | H10 1321 | H14 C1321 |
| | +4mm | H11 1322 | H10 1322 | H14 C1322 |
| | +8mm | H11 1323 | H10 1323 | - |
| Ø36 | -4mm | - | H10 1360 | H14 C1360 |
| | +0mm | - | H10 1361 | H14 C1361 |
| | +4mm | - | H10 1362 | H14 C1362 |
| | +8mm | - | H10 1363 | - |
| Ø40 | -4mm | - | - | H14 C1400 |
| | +0mm | - | - | H14 C1401 |
| | +4mm | - | - | H14 C1402 |

(1) implants disponibles sur demande spéciale / *implants available only on special request*
(2) limite de poids patient à 75kgs / *not validated for patients exceeding 75kgs*
(3) non compatible avec les tiges latéralisées à 128° / *not validated for use with 128° lateralized stems*

## Vis de verrouillage *Locking screw*

| Diamètre *Diameter* | Longueur *Length* | Ref. *Cat. N°* |
|---|---|---|
| Ø6.0 /4.5 | 25mm | H15 SC6025 |
| Ø6.0 /4.6 | 30mm | H15 SC6030 |
| Ø6.0 /4.7 | 35mm | H15 SC6035 |
| Ø6.0 /4.8 | 40mm | H15 SC6040 |

Manche porte-râpe adapté ; postéro-latéral, décalé, ou antérieur
*Choice of broach handle: postero-lateral, offset, or anterior*

## Instrumentation HACTIV® *Instrument Set*

| Instrumentation | Ref. *Cat. N°* |
|---|---|
| Hactiv première intention *Hactiv Primary* | H50 9100 |
| Hactiv Revision base *Hactiv revision basis* | H50 9101 |
| Complémentaire alésage *Reamer complementary set* | H50 9103 |
| Viseur de verrouillage distal *Distal locking aiming jig* | H38 9103 |

Mai 2017 / Ref. : BI_HACTIV FP H50

**Mentions légales :**
Les implants HACTIV, CEMTIV et REACTIV sont des dispositifs médicaux implantables de classe III indiqués pour les arthroplasties primaires totales (PTH) partielles (PIH) ou pour les révisions d'arthroplastie (PTHR) de la hanche selon la version.
Les implants HACTIV, CEMTIV et REACTIV sont pris en charge par l'assurance maladie sous certaines conditions.
Informations sur le site *wwww.ameli.fr*.
Le chirurgien est expressément invité à lire attentivement les instructions mentionnées sur la notice d'utilisation incluse dans le conditionnement du DMI ainsi que le manuel de technique opératoire délivré à la mise en place du produit ou disponible en téléchargement sur le site *www.evolutisfrance.com*.

**Matériaux / *Materials:***
Tiges HACTIV® et REACTIV™ revêtues : alliage de titane TA6V selon ISO 5832-3 et HAP
Tiges CEMTIV® à cimenter : acier inox. à haute teneur en azote selon ISO 5832-9
Têtes fémorales : acier inox. à haute teneur en azote selon ISO 5832-9 ou alliage de chrome-cobalt selon ISO 5832-4 ou céramique d'alumine pure selon ISO 6474-1 ou céramique composite selon ISO 6474-2
Vis de verrouillage : alliage de titane TA6V selon ISO 5232-2
Conditionnement sous vide. Stérilisation rayons gamma.
*Coated HACTIV® and REACTIV™ stems : titanium alloy TA6V according ISO 5832-3 + Calcium Hydroxyapatite*
*Cemented CEMTIV® stems : high nitrogen content stainless steel according ISO 5832-9*
*Femoral heads : high nitrogen content stainless steel according ISO 5832-9 or cobalt-chromium alloy according ISO 5832-4 or pure alumina ceramic according ISO 6474-1 or ceramic composite according ISO 6474-2*
Locking screws: *titanium alloy TA6V according ISO 5832-3*
*Vacuum packed. Gamma ray sterilised.*

CE 0086 Evolutis
Avenue de la Libération, 42720 Briennon, France
Tel : +33. (0)477.60.79.99 – Fax : +33. (0)477.60.79.90

Designed and Manufactured in France

www.evolutisfrance.com

www.evolutisfrance.com

Evolutis

CREATEUR FABRICANT

# EvoCem®

1

G1

3

G3

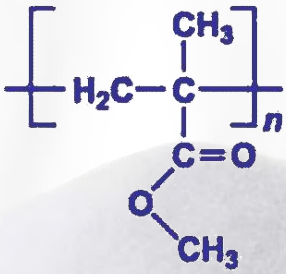


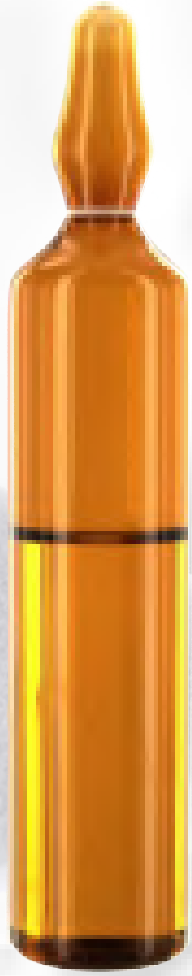

## Bone Cement

*Ciment de fixation osseuse*

1

G1

3

G3

# EvoCem®

*Acrylic bone cement are indicated for immediate and long term fixation of metal and polyethylene orthopaedic implants destined for use with cement.*

*Radiopaque and self curing cement available in both standard (EvoCem® 1) and low viscosity (EvoCem® 3) either with or without gentamycin antibiotic.*
*Antibiotic cement is suitable for the treatment of revision arthroplasties, for septic replacements and for patients with infectious risks.*

*Choice of viscosity depending on the cement application mode and site of implantation:*
*- standard viscosity: digital application on superficial surfaces of the bone,*
*- low viscosity: syringe application in deep bone cavities or diaphyseal bones in association with a cement restrictor.*

Ciment osseux acrylique indiqué pour la fixation immediate des prothèses articulaires en métal ou en polyéthylène.

Ciment radio-opaque auto-durcissant en viscosité standard (EvoCem® 1) ou basse viscosité (EvoCem® 3). Les 2 versions sont disponibles avec ou sans antibiotique : versions avec antibiotique indiquées pour les arthroplasties de révision, les changements de prothèses sur sepsis et chez les patients à risque infectieux.

Choix de la viscosité utilisée en fonction du mode d'application et du site opératoire :
- viscosité standard : application manuelle sur les faces superficielles de l'os.
- basse viscosité : application à la seringue dans les cavités osseuses ou les diaphyses après mise en place d'un obturateur à ciment.

## *Time chart* / Tableau de chronométrage

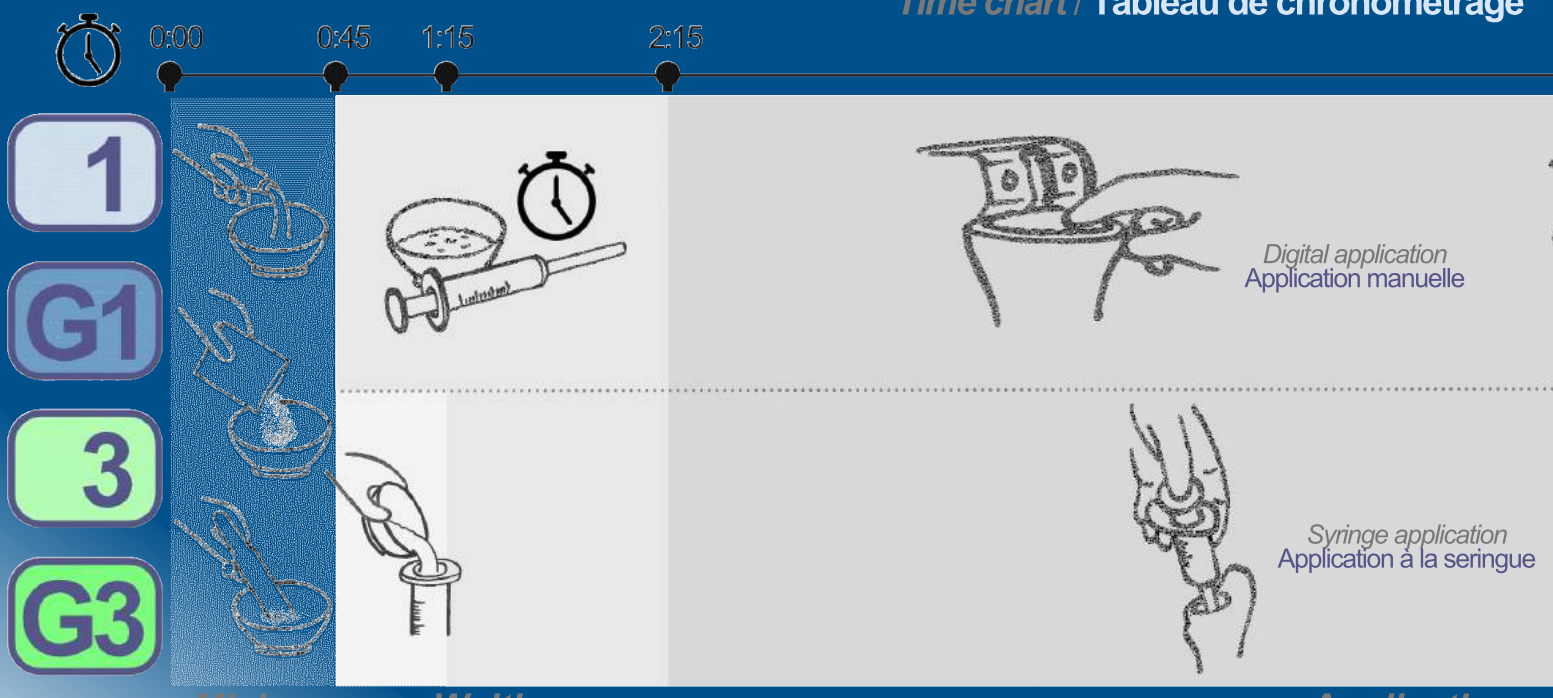

## CHARACTERISTICS

- *Fast curing acrylic bone cement (9 to 12mn depending on version)*
- *Short mixing and waiting phases allow for longer working time*
- *Low powder polymer to liquid monomer ratio : reduces vapor diffusion and exothermic reaction*
- *Radiopaque agent: Barium sulphate*

## CARACTERISTIQUES

- Ciment acrylique osseux à durcissement rapide (9 à 12mn selon la version)
- Phases de mélange et de repos écourtées pour un temps de travail allongé
- Ratio polymère (poudre)/monomère (liquide) réduit : réduction des vapeurs de monomère et de l'exothermie en phase de durcissement
- Radio-opacifiant : sulfate de Barium

## PERFORMANCE

| | ISO | 1 | 3 | G1 | G3 |
|---|---|---|---|---|---|
| *Compressive strength (MPa)*<br>Résistance en compression (MPa) | >70 | 112.7 | 116.7 | 100.4 | 108.9 |
| *Flex resistance strength (MPa)*<br>Résistance en flexion (MPa) | >50 | 69.3 | 68.8 | 65.8 | 68.3 |
| *Modulus of elasticity (MPa)*<br>Module d'élasticité (MPa) | >1800 | 3798 | 3699 | 3658 | 3874 |
| *Max. Temp during polymerisation*<br>Temp. maximale de polymérisation | <90° | 67.9 | 66.9 | 66.9 | 71.9 |

The performances of the EvoCem® bone cement in compression, flexion, elasticity and exothermy are compared to the ISO 5933/2002 minimal requirements
*Les performances en compression, flexion, élasticité et exothermie des ciments EvoCem® sont comparées au exigences minimales de la norme ISO 5933/2002*

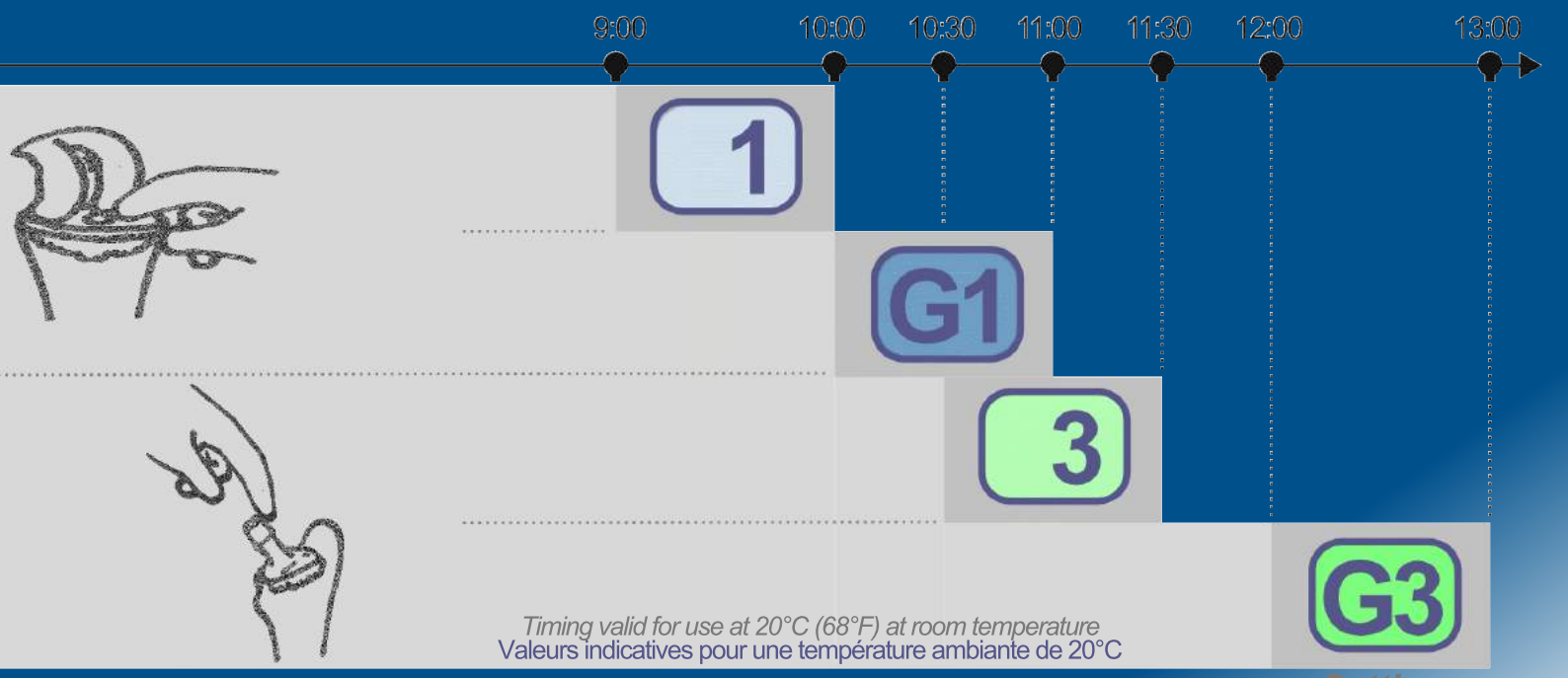

# *Antibiotic "G" versions*
# Versions "G" antibiotiques

**G1**
**G3**

- *Local and immediate antibiotic release into the prosthetic bone site*
- *Indications are limited to situations at risk of infection, removal of implants due to infection, and revisions*
- *Gentamycin antibiotic (aminosides) offer a large spectrum of antibiotic protection against the most commonly occuring bacteria*

***Specific formulation:***
- *flash release within the first hours of implantation (0.8mg as early as 18h after implantation)*
- *continuous efficient diffusion on a long term basis*
- *each individual 40g dose contains the equivalent of 1g of gentamycin base (gentamycin sulphate) and results in a local concentration exceeding the MIC (minimal inhibitory concentration)*

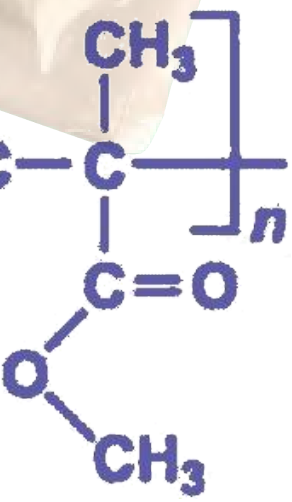


- Traitement d'antibiothérapie locale directement sur le site d'implantation
- Indications limitées aux risques infectieux, aux ablations sur sepsis, et aux révisions d'arthroplasties
- Antibiotique gentamicine (famille des aminosides) pour son efficacité à large spectre sur les bactéries les plus courantes

***Formulation spécifique :***
- *flash release dans les premières heures (0,8mg dès 18h d'implantation)*
- *maintien d'une cinétique de relargage efficace à long terme*
- *chaque dose de 40g contient l'équivalent de 1g de gentamicine base (sulfate de gentamicine) pour une concentration locale supérieure à la CMI (concentration minimale inhibitoire)*

***Preparation Mode***

*1- Make sure to use a clean and dry bowl, and an undamaged or worn spatula*
*2- Open the powder pouch with a pair of scissors*
*3- Grip the plastic tip and break the glass ampoule at its predetermined breaking point*
*4- Pour the liquid into the bowl*
*5- Immediately pour the powder over the liquid*
*6- Mix gently to avoid introduction of air bubbles, for 45"*
*7- Allow the cement to settle for1'30"*
*7bis- For EvoCem® 3 and G3, immediately pour into the syringe and position the piston in the syringe body*
*7ter- Push the piston until the cement reaches the tip of the syringe, expelling the air*
*8- Once the cement no longer "sticks" to the gloves, spread/inject the cement on/into the bone or on the implant*
*9- Introduce the prosthesis*
*10- Impact the prosthesis with firm pressure*
*11- Remove the excess of cement with a curette*
*12- Finalize pressurisation of the implant in the cement*
*13- Remove excess cement and carefully clean around the implant*
*14- Once the cement begins to cure, further manipulation of the cement is no longer possible*
*15- Wait until complete curing of the cement as outlined in the time chart*

**Mode de préparation**

1- S'assurer de la disposition d'un bol propre et sec, et d'une spatule non émoussée
2- Ouvrir le sachet de poudre avec une paire de cisseaux
3- Saisir l'embout plastique et casser l'extrémité de l'ampoule
4- Verser le contenu de l'ampoule dans le bol
5- Verser immédiatement la poudre sur le liquide
6- Mélanger lentement pendant 45"
7- Laisser reposer pendant 1'30"
7bis- Pour les EvoCem® 3 et G3, verser immédiatement dans la seringue
7ter- Repositionner le piston de la seringue et le pousser jusqu'à amener le ciment au ras de la canule
8- Lorsque le ciment n'adhère plus au gant, étendre/injecter le ciment sur/dans l'os ou sur l'implant
9- Introduire/mettre en place l'implant
10- Impacter l'implant
11- Retirer les excès de ciment à l'aide d'une curette
12- Compléter l'impaction
13- Retirer les excès de ciment et nettoyer rigoureusement les faces de l'implant
14- Lorsque le ciment débute sa phase de polymérisation (les plis ne s'estompent plus), impérativement arrêter toute manipulation du ciment et de l'implant
15- Attendre le durcissement complet du ciment

***Recommandations for storage***
- *sterile products ready for use, pre-dosed*
- *do not use unless the packaging is intact*
- *single use, do not resterilise*
- *store in a clean dry room out of direct light*
- *do not store above 25°C (77°F)*

***Recommandations de conservation***
- *produit stérile, prêt à l'emploi, pré dosé*
- *ne pas utiliser si l'emballage est endommagé*
- *usage unique, ne pas restériliser*
- *conserver à l'abri de la lumière directe dans un lieu propre et sec*
- *ne pas stocker à plus de 25°C*

# References

| | Volume | Viscocity *Viscosité* | Type | Ref Code |
|---|---|---|---|---|
| **Cement / *Ciment*** | | | | |
| EvoCem 1 | 40gr. | Standard | Plain / *Nature* | B01 401 |
| EvoCem 3 | 40gr. | Low / *Basse* | Plain / *Nature* | B01 403 |
| EvoCem G1 | 40gr. | Standard | Gentamycin | B01 401A |
| EvoCem G3 | 40gr. | Low / *Basse* | Gentamycin | B01 403A |
| Bowl and Spatula / *Bol et Spatule* | | | Non Sterile | T060404 |

***Material / Matériaux***
*Glass Ampoule: monomer (methyl-methacrylate, butyl-methacrylate, N-N dimethyl-p-toluidine and hydroquinone) sterilised by ultra-filtration and ethylene oxyde after packaging.*
*Pouch: polymer (polymethyl-methacrylate, benzoyl and barium sulphate, gentamycin sulphate for the G versions) gamma ray sterilised (25 KGy) in double pouch packaging.*
*Bowl and spatula in Polypropylene.*
Ampoule : monomère (méthyl-méthacrylate, butyl-methacrylate, N-N dimethyl-p-toluidine et hydroquinone) stérilisé par ultra-filtration puis par oxyde d'éthylène après conditionnement.
Sachet : polymère (polyméthyl-méthacrylate, benzoyl et sulfate de barium, sulfate de gentamicine pour les versions G) sous double sachet stérilisé par rayonnement gamma à 25 KGy.
Bol et spatule en Polypropylène.

*Class IIb* (EvoCem® 1 & 3) and class III (EvoCem® G1 & G3) *medical devices*
Dispositifs médicaux de classe IIb (EvoCem® 1 et 3) et de classe III (EvoCem® G1 et G3)

Evolutis
MOTION INSIDE

www.evolutisfrance.com
Evolutis, 10 Place des Tuiliers,
42720 Briennon, France
Tel : +33. (0)477.60.79.99
Fax : +33. (0)477.60.79.90

CE 2797
Teknimed
8 rue du Corps Franc-Pommiès
65500 Vic en Bigorres - France

Designed and Manufactured in France

Jul 2019 / Ref. : BL_EVOCEM DOC B02

www.evolutisfrance.com

Evolutis

CREATEUR FABRICANT

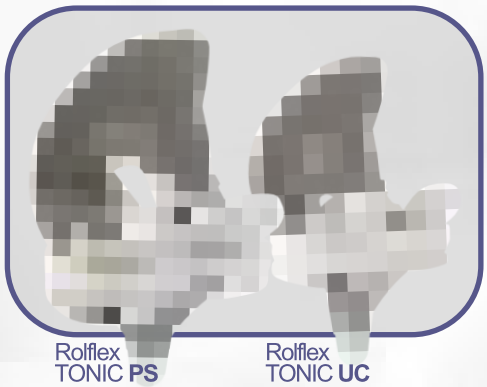


Rolflex TONIC®

# Total Knee Prosthesis for Primary and Revision Indications

# *Prothèse Totale de Genou pour Indications Primaires et Révision*

Evolutis
MOTION INSIDE

# REFERENCES

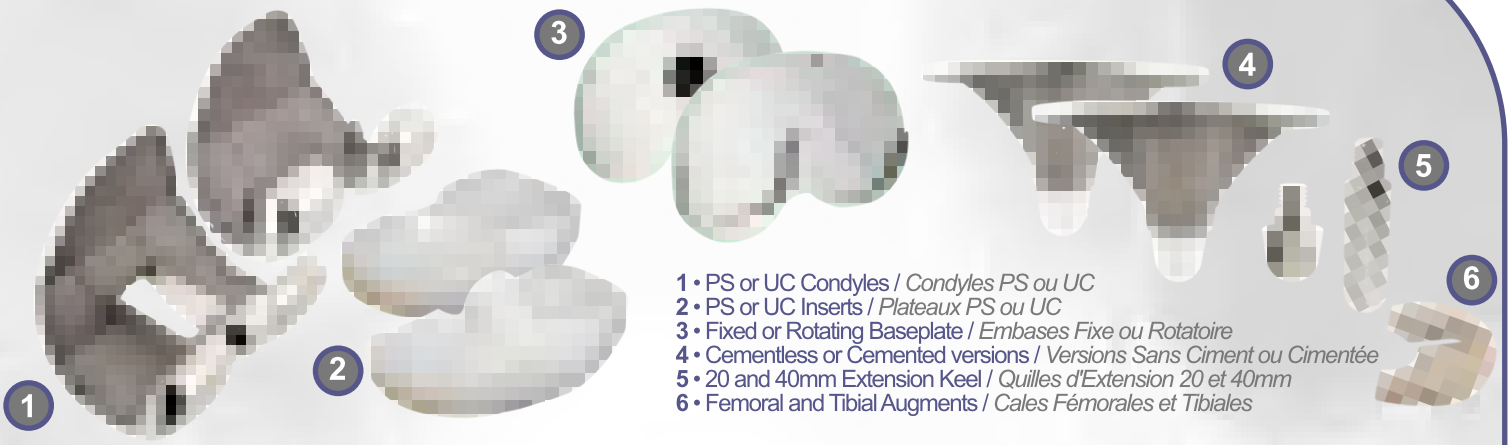


1 • PS or UC Condyles / *Condyles PS ou UC*
2 • PS or UC Inserts / *Plateaux PS ou UC*
3 • Fixed or Rotating Baseplate / *Embases Fixe ou Rotatoire*
4 • Cementless or Cemented versions / *Versions Sans Ciment ou Cimentée*
5 • 20 and 40mm Extension Keel / *Quilles d'Extension 20 et 40mm*
6 • Femoral and Tibial Augments / *Cales Fémorales et Tibiales*

## Condyles / Condyles

| | PS / *Postéro-Stabilisés* | | | | UC / *Ultra-congruents* | | | |
|---|---|---|---|---|---|---|---|---|
| | Cemented / *A cimenter* | | Cementless / *Sans ciment* | | Cemented / *A cimenter* | | Cementless / *Sans ciment* | |
| | R / D | L / G | R / D | L / G | R / D | L / G | R / D | L / G |
| Sz./T 0 | G33 FPCD00 | G33 FPCG00 | G33 FPRD00 | G33 FPRG00 | G33 FUCD00 | G33 FUCG00 | G33 FURD00 | G33 FURG00 |
| Sz./T 1 | G33 FPCD01 | G33 FPCG01 | G33 FPRD01 | G33 FPRG01 | G33 FUCD01 | G33 FUCG01 | G33 FURD01 | G33 FURG01 |
| Sz./T 2 | G33 FPCD02 | G33 FPCG02 | G33 FPRD02 | G33 FPRG02 | G33 FUCD02 | G33 FUCG02 | G33 FURD02 | G33 FURG02 |
| Sz./T 3 | G33 FPCD03 | G33 FPCG03 | G33 FPRD03 | G33 FPRG03 | G33 FUCD03 | G33 FUCG03 | G33 FURD03 | G33 FURG03 |
| Sz./T 4 | G33 FPCD04 | G33 FPCG04 | G33 FPRD04 | G33 FPRG04 | G33 FUCD04 | G33 FUCG04 | G33 FURD04 | G33 FURG04 |
| Sz./T 5 | G33 FPCD05 | G33 FPCG05 | G33 FPRD05 | G33 FPRG05 | G33 FUCD05 | G33 FUCG05 | G33 FURD05 | G33 FURG05 |
| Sz./T 6 | G33 FPCD06 | G33 FPCG06 | G33 FPRD06 | G33 FPRG06 | G33 FUCD06 | G33 FUCG06 | G33 FURD06 | G33 FURG06 |
| Sz./T 7 | G33 FPCD07 | G33 FPCG07 | G33 FPRD07 | G33 FPRG07 | G33 FUCD07 | G33 FUCG07 | G33 FURD07 | G33 FURG07 |
| Sz./T 8 | G33 FPCD08 | G33 FPCG08 | G33 FPRD08 | G33 FPRG08 | G33 FUCD08 | G33 FUCG08 | G33 FURD08 | G33 FURG08 |
| Sz./T 9 | G33 FPCD09 | G33 FPCG09 | G33 FPRD09 | G33 FPRG09 | G33 FUCD09 | G33 FUCG09 | G33 FURD09 | G33 FURG09 |

| Patella Rotule | |
|---|---|
| Ø23 | G33 ROT023 |
| Ø25 | G33 ROT025 |
| Ø28 | G33 ROT028 |

Lot 11

## Tibial Baseplate / Embase tibiale

| | Fixed / *Fixe* | | | | Rotating / *Rotatoire* | | | |
|---|---|---|---|---|---|---|---|---|
| | Cemented / *A cimenter* | | Cementless / *Sans ciment* | | Cemented / *A cimenter* | | Cementless / *Sans ciment* | |
| | R / D | L / G | R / D | L / G | R / D | L / G | R / D | L / G |
| Sz./T 0 | G33 TFCD00 | G33 TFCG00 | G33 TFRD00 | G33 TFRG00 | G33 TMCD00 | G33 TMCG00 | G33 TMRD00 | G33 TMRG00 |
| Sz./T 1 | G33 TFCD01 | G33 TFCG01 | G33 TFRD01 | G33 TFRG01 | G33 TMCD01 | G33 TMCG01 | G33 TMRD01 | G33 TMRG01 |
| Sz./T 2 | G33 TFCD02 | G33 TFCG02 | G33 TFRD02 | G33 TFRG02 | G33 TMCD02 | G33 TMCG02 | G33 TMRD02 | G33 TMRG02 |
| Sz./T 3 | G33 TFCD03 | G33 TFCG03 | G33 TFRD03 | G33 TFRG03 | G33 TMCD03 | G33 TMCG03 | G33 TMRD03 | G33 TMRG03 |
| Sz./T 4 | G33 TFCD04 | G33 TFCG04 | G33 TFRD04 | G33 TFRG04 | G33 TMCD04 | G33 TMCG04 | G33 TMRD04 | G33 TMRG04 |
| Sz./T 5 | G33 TFCD05 | G33 TFCG05 | G33 TFRD05 | G33 TFRG05 | G33 TMCD05 | G33 TMCG05 | G33 TMRD05 | G33 TMRG05 |
| Sz./T 6 | G33 TFCD06 | G33 TFCG06 | G33 TFRD06 | G33 TFRG06 | G33 TMCD06 | G33 TMCG06 | G33 TMRD06 | G33 TMRG06 |
| Sz./T 7 | G33 TFCD07 | G33 TFCG07 | G33 TFRD07 | G33 TFRG07 | G33 TMCD07 | G33 TMCG07 | G33 TMRD07 | G33 TMRG07 |
| Sz./T 8 | G33 TFCD08 | G33 TFCG08 | G33 TFRD08 | G33 TFRG08 | G33 TMCD08 | G33 TMCG08 | G33 TMRD08 | G33 TMRG08 |

| Tibial Keel Quille Tibiale | | |
|---|---|---|
| Ø13 | l.20mm | G33 QT1320 |
| Ø13 | l.40mm | G33 QT1340 |
| Ø13 | l.70mm | G33 QT1370 |
| Ø13 | l.110mm | G33 QT13110 |
| Ø15 | l.20mm | G33 QT1520 |
| Ø17 | l.20mm | G33 QT1720 |

## Tibial insert / Plateau tibial

| | Fixed / *Fixe* | | | | Rotating / *Rotatoire* | | | | | | |
|---|---|---|---|---|---|---|---|---|---|---|---|
| | PS / *Postéro-stabilisé* | | | | PS / *Postéro-stabilisé* | | | | UC / *Ultra-congruent* | | |
| | h.10mm | h.12mm | h.15mm | h.18mm | h.10mm | h.12mm | h.15mm | h.18mm | h.10mm | h.12mm | h.15mm |
| Sz./T 0 | G33 IFP010 | G33 IFP012 | G33 IFP015 | - | G33 IMP010 | G33 IMP012 | G33 IMP015 | - | G33 IMU010 | G33 IMU012 | G33 IMU015 |
| Sz./T 1 | G33 IFP110 | G33 IFP112 | G33 IFP115 | G33 IFP118 | G33 IMP110 | G33 IMP112 | G33 IMP115 | G33 IMP118 | G33 IMU110 | G33 IMU112 | G33 IMU115 |
| Sz./T 2 | G33 IFP210 | G33 IFP212 | G33 IFP215 | G33 IFP218 | G33 IMP210 | G33 IMP212 | G33 IMP215 | G33 IMP218 | G33 IMU210 | G33 IMU212 | G33 IMU215 |
| Sz./T 3 | G33 IFP310 | G33 IFP312 | G33 IFP315 | G33 IFP318 | G33 IMP310 | G33 IMP312 | G33 IMP315 | G33 IMP318 | G33 IMU310 | G33 IMU312 | G33 IMU315 |
| Sz./T 4 | G33 IFP410 | G33 IFP412 | G33 IFP415 | G33 IFP418 | G33 IMP410 | G33 IMP412 | G33 IMP415 | G33 IMP418 | G33 IMU410 | G33 IMU412 | G33 IMU415 |
| Sz./T 5 | G33 IFP510 | G33 IFP512 | G33 IFP515 | G33 IFP518 | G33 IMP510 | G33 IMP512 | G33 IMP515 | G33 IMP518 | G33 IMU510 | G33 IMU512 | G33 IMU515 |
| Sz./T 6 | G33 IFP610 | G33 IFP612 | G33 IFP615 | G33 IFP618 | G33 IMP610 | G33 IMP612 | G33 IMP615 | G33 IMP618 | G33 IMU610 | G33 IMU612 | G33 IMU615 |
| Sz./T 7 | G33 IFP710 | G33 IFP712 | G33 IFP715 | G33 IFP718 | G33 IMP710 | G33 IMP712 | G33 IMP715 | G33 IMP718 | G33 IMU710 | G33 IMU712 | G33 IMU715 |
| Sz./T 8 | G33 IFP810 | G33 IFP812 | G33 IFP815 | G33 IFP818 | G33 IMP810 | G33 IMP812 | G33 IMP815 | G33 IMP818 | G33 IMU810 | G33 IMU812 | G33 IMU815 |
| Sz./T 9 | - | - | - | - | G33 IMP910 | G33 IMP912 | G33 IMP915 | G33 IMP918 | G33 IMU910 | G33 IMU912 | G33 IMU915 |

## Augment / Cale

| | Tibial / *Tibiale* | | Femoral / *Fémorale* | | | |
|---|---|---|---|---|---|---|
| | | | Distal / *Distale* | | Posterior / *Postérieure* | |
| | h.5mm | h.10mm | h.4mm | h.8mm | h.4mm | h.8mm |
| Sz./T. 0 | G33 CT0500 | G33 CT1000 | G33 CFD400 | G33 CFD800 | G33 CFP400 | G33 CFP800 |
| Sz./T. 1 | G33 CT0501 | G33 CT1001 | G33 CFD401 | G33 CFD801 | G33 CFP401 | G33 CFP801 |
| Sz./T. 2 | G33 CT0502 | G33 CT1002 | G33 CFD402 | G33 CFD802 | G33 CFP402 | G33 CFP802 |
| Sz./T. 3 | G33 CT0503 | G33 CT1003 | G33 CFD403 | G33 CFD803 | G33 CFP403 | G33 CFP803 |
| Sz./T. 4 | G33 CT0504 | G33 CT1004 | G33 CFD404 | G33 CFD804 | G33 CFP404 | G33 CFP804 |
| Sz./T. 5 | G33 CT0505 | G33 CT1005 | G33 CFD405 | G33 CFD805 | G33 CFP405 | G33 CFP805 |
| Sz./T. 6 | G33 CT0506 | G33 CT1006 | G33 CFD406 | G33 CFD806 | G33 CFP406 | G33 CFP806 |
| Sz./T. 7 | G33 CT0507 | G33 CT1007 | G33 CFD407 | G33 CFD807 | G33 CFP407 | G33 CFP807 |
| Sz./T. 8 | G33 CT0508 | G33 CT1008 | G33 CFD408 | G33 CFD808 | G33 CFP408 | G33 CFP808 |

**Materials:**
Condyles: CoCr according ISO5832-4 (cemented) or CoCr according ISO5832-4 coated with macroporous Ti (cementless)
Tibial Baseplate: CoCr according ISO5832-4 (cemented) and UHMWPE according ISO 5834-1 & 2 or CoCr according ISO5832-4 coated with macroporous Ti (cementless) and UHMWPE according ISO 5834-1 & 2
Tibial Insert: PEXEL® UHMWPE according ISO 5834-1 & 2 and Stainless Steel according ISO 5832-1
Patella: PEXEL® UHMWPE according ISO 5834-1 & 2 and Stainless Steel according ISO 5832-1
Tibial keel: CoCr according ISO5832-12
Augment: CoCr according ISO5832-4
**Vacuum packaging VacUPac®. Gamma ray sterilised.**

***Matériaux :***
*Condyles : CrCo selon ISO5832-4 (cimenté) ou CrCo selon ISO5832-4 revêtu Ti macroporeux (sans ciment)*
*Embase tibiale : CrCo selon ISO5832-4 (cimenté) et UHMWPE selon ISO 5834-1 et 2 ou CrCo selon ISO5832-4 revêtu Ti macroporeux (sans ciment) et UHMWPE selon ISO 5834-1 et 2*
*Plateau Tibial : UHMWPE PEXEL® selon ISO 5834-1 et 2, et Inox selon 5832-1*
*Rotule : UHMWPE PEXEL® selon ISO 5834-1 et 2, et Inox selon 5832-1*
*Quille Tibiale : CrCo selon ISO5832-12*
*Cale : CrCo selon ISO5832-4*
***Conditionnement sous vide VacUPac®. Stérilisation gamma.***

**Mentions légales**
Les implants ROLFLEX TONIC sont des dispositifs médicaux implantables de classe III indiqués pour les arthroplasties primaires totales (PTG) de genou.
Les implants ROLFLEX TONIC sont pris en charge par l'assurance maladie sous certaines conditions. Pour plus de précision, merci de vous rendre sur le site www.ameli.fr.
Le chirurgien est expressément invité à lire les instructions mentionnées sur la notice d'utilisation incluse dans le conditionnement du DMI, ainsi que le manuel de technique opératoire délivré à la mise en place du produit ou disponible en téléchargement sur le site www.evolutisfrance.com.


Evolutis
Avenue de la Libération, 42720 Briennon, France
Tel : +33. (0)477.60.79.99 – Fax : +33. (0)477.60.79.90


Designed and Manufactured in France

www.evolutisfrance.com

Octobre 2016 / Ref.: BI_ROLFLEX TONIC FP G34 (G34 430)

COVISION
ORTHOPAEDICS

# SUPERICA Medial-Pivot Knee System
## Surgical Technique

# Contents

Introduction ..... 3 - 5

Intended Use ..... 6

Surgical Technique ..... 7 - 19

Technique Overview ..... 20

Ordering Information ..... 21 - 29

# Introduction

Why set out to design a better knee system? Today, according to the latest literature, nearly 20% of all patients are unhappy with their total knee replacement due to residual pain, functional issues and early implant failure.

Superica Knee System is designed to answer the limitations of traditional implants by delivering superior flexion stability, anatomic motion, and wear -limiting design characteristics.

## Stable Motion, Normal Function, Natural Feel

The Medial-Pivot Knee is uniquely engineered to reproduce a healthy knee's stability and motion. With a stable, pivoting medial side and a lateral side that rolls forward or backward throughout flexion, the SUPERICA MEDIAL PIVOT Knee System is designed to feel and function like a natural knee.

## ACL-PCL Substituting

**High Conformity, Constant Radius, Unique Design.**

The Medial-Pivot Knee features a highly conforming medial side that results from a constant radius design. Reproducing the natural function and stability of the ACL and PCL, this design is unique from every other less conforming traditional knee system. It gives the MedialPivot Knee natural motion, so it feels more like a normal knee.

# Introduction

## High Conformity

**High Conforming Articulations, Stable Range of Motion, Fewer Revisions.**

It is routine for patients to complain of instability following a traditional knee replacement. Studies also clearly show instability to be the leading cause of early revisions.By delivering a more secure, highly conforming articulation, the Superica Knee System provides the kind of stability throughout the range of motion that patients seek.

## Constant Radius

**Natural Biomechanics,Anterior-Posterior Stability.**

With a constant radius design, the new Knee System gives patients a more stable feeling and more normal biomechanics. The constant radius in both the coronal and sagittal planes is uniquely designed to mimic the movement of the natural knee. This is a significant benefit over traditional multi-radius implants, which are typically less stable and fail to deliver the same natural feeling to the patient.

With a constant radius femoral component featuring a highly congruent tibial insert, the new Knee System also delivers superior stability in mid-flexion and prevents anterior-posterior translation. The simple result is that the Superica  constant radius knee design has been documented in literature to achieve higher clinical function than competitive multi-radius designs.

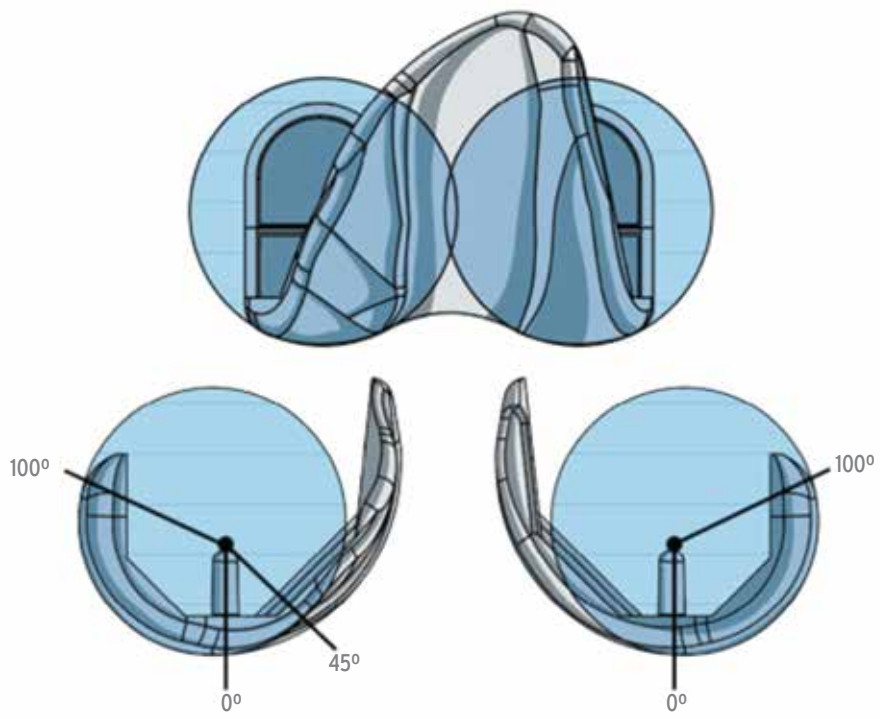


Only knee design with spherical geometry in both sagittal and coronal planes.

# Introduction

### Feels Normal, Behaves Naturally, Functions Like the Human Knee.

With the increasingly active lives of patients today, they have come to demand and expect an implant that feels normal and behaves naturally. The Superica MEDIAL PIVOT Knee System has uniquely designed structures, contours and movements that look, feel and function like the human knee. This is in stark contrast to traditional knee replacements that do not possess design features similar to the human knee, and thus do not reproduce performance that feels like a natural knee.

Equally important and essential to a normal feeling replacement is the Superica Knee System global sizing profile. It helps assure a more natural fit that promotes normal feeling functionality and higher quality of life.

### Replicates ACL and PCL, Preferred Over All Other Designs, More Natural Feeling.

One reason patients can tell the difference between their natural knee and a replacement is soft tissue. One study found that our Medial-Pivot design, which effectively substitutes for the ACL and PCL, is strongly preferred over all other designs (CR, PS, and Mobile-Bearing).2

The Superica tibial insert features a high anterior and posterior lip which substitutes for both cruciate ligaments and delivers a more normal feeling for the patient. The result is a more natural feeling for patients that increases proprioception.

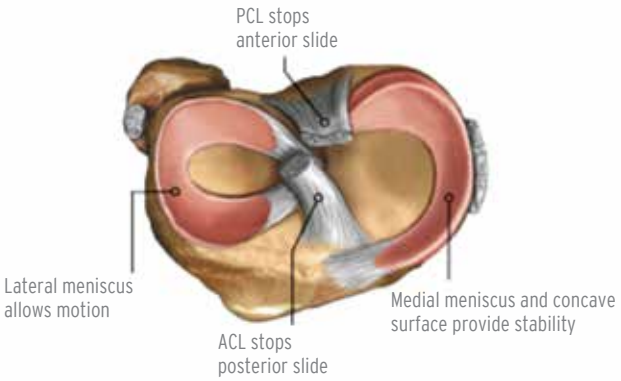


**Anatomic structure of the normal knee.**

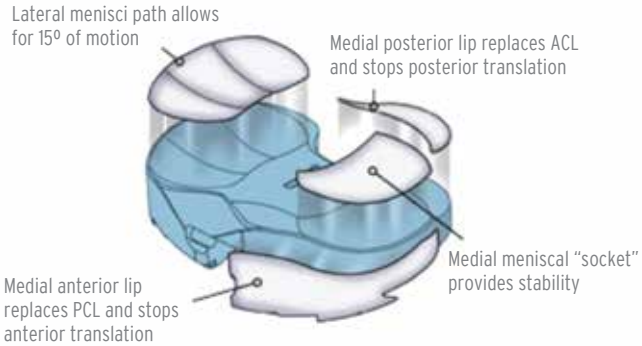


**Knee System replicates normal knee structures to recreate natural function.**

# Intended Use

SUPERICA MEDIAL PIVOT instrumentation is designed to be applicable to both less-invasive and standard total knee procedures. Therefore, surgeons should employ the technique they are most comfortable with; be it medial parapatellar, subvastus or midvastus. With the SUPERICA MEDIAL PIVOT instrumentation, the preparation of the femur and tibia can be performed independently. This choice is left to the surgeon's discretion.

## Indications

COVISION Total Knee Systems are indicated for use in knee arthroplasty in skeletally mature patients with the following conditions:

1. noninflammatory degenerative joint disease including osteoarthritis, traumatic arthritis, or avascular necrosis;
2. inflammatory degenerative joint disease including rheumatoid arthritis;
3. correction of functional deformity;
4. revision procedures where other treatments or devices have failed; and treatment of fractures that are unmanageable using other techniques.

SUPERICA Medial-Pivot Tibial Base and Insert Components are for use with bone cement.

# Surgical Technique

Proper surgical procedures and techniques are ultimately the responsibility of the operating medical professionals. The following guidelines are furnished for informationl purposes only and relate specifically to the use of the SUPERICA Total Knee Prosthesis instruments and trials by Covision. Each surgeon must evaluate the appropriateness of the information provided based on his or her personal training and experience.

## 1. Distal Femural Resection

Initiate an opening in the femoral canal with the 9.5mm (3/8") diameter drill bit. The hole may be placed sligthly medial and anterior to the intercondylar notch. Insert the fluted IM reamer/rod into the femoral canal, being sure to irrigate and aspirate several times to reduce the chance of a fat embolus. Turn the reamer during insertion with the T-handle. FIGURE 1-2

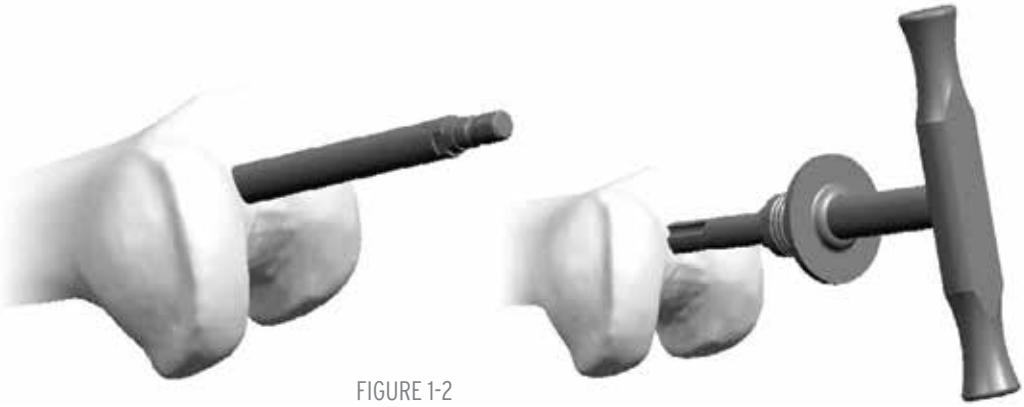

FIGURE 1-2

Distal resection blocks are available in 9mm, 11mm, and 13mm. Load the appropriate distal resection block onto the distal resection paddle and lock them together by sliding the locking button to the right (FIGURE 3).

Insert the distal resection paddle onto the valgus bushing The valgus bushing has both a "Left" and "Right" side, and has three slots which allow 3°, 5°, or 7° of valgus. Ensure the "Left" side of the bushing is superior for a left knee and the "Right" side is superior for a right knee. Slide the valgus alignment bushing down the IM rod until the distal resection paddle rests against the unresected prominent distal condyle. Although rotation is not critical at this step, the distal resection paddle features two lines which may be aligned with the epicondyles. | B in FIGURE 3 Lock the valgus alignment bushing to the rod by turning the knurled knob until it is tight. The knurled knob is highly geared. Only 1/4 turn allows to lock the jig rod. | C in FIGURE 3.

Pin the block to the anterior cortex with two headless pins  through the "Std" holes. Additional fixation pins may be added through the divergent holes. | D in FIGURE 4 Slide left the locking button to detach the resection block and remove the IM rod, distal resection paddle and valgus bushing.

# Surgical Technique

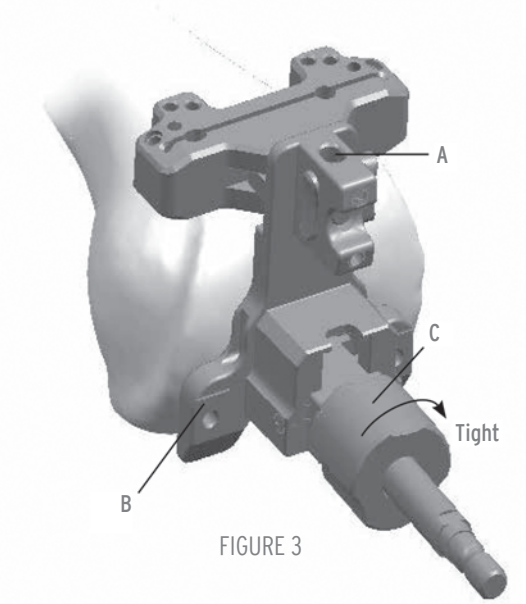

FIGURE 3

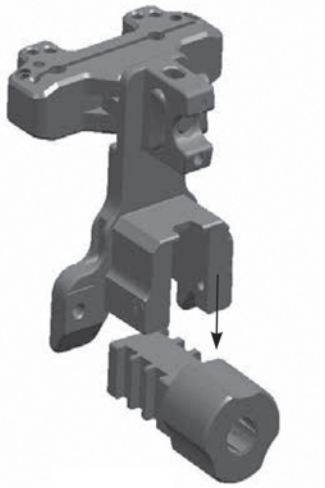
FIGURE 4

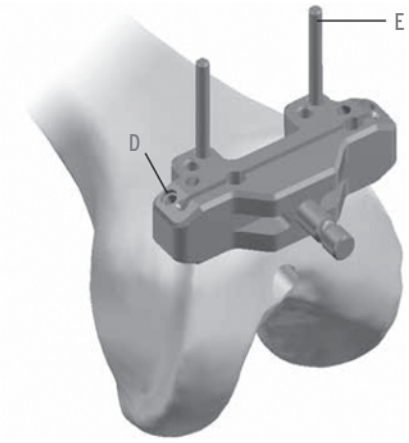

FIGURE 5

## Related Instruments:


9.5mm (3/8") Diameter Dril Bit

T-handle Reamer

IM Reamer Rod

Distal Resection Block

Distal Resection Paddle and Valgus Bushing


Headless Pin

### Re-cutting the Distal Femur

Insert the fluted IM reamer/rod into the femoral canal with the help of the T-handle . Load a distal resection block (available in 9mm, 11mm and 13mm  onto the distal resection paddle  and lock them together. Insert the distal resection paddle onto the valgus bushing.Slide the 7mm distal spacer against the interior face of the distal resection paddle until it clicks. | A in  When utilized, the distal spacer will reduce the distal resection made by 7mm. (For example, it will allow a 2mm distal resection when used with the 9mm distal resection guide.) Slide the reamer into the intramedullary canal until the distal spacer contacts the distal femur. Pin the resection block in place with two headless pins . Slide left the locking mechanism to detach the resection block and remove the IM rod, distal resection paddle and valgus bushing. Perform the distal re-cut.

## 2. Femoral Sizing and Rotation

**NOTE: The caliper must be set for the appropriate knee. For example: If used on a right knee, the "Right" marking must be facing the observer and the "Left" marking should be against the bone. To set the caliper for the opposite knee, remove the posterior feet, rotate the caliper and reinsert the feet.**

Place the sizing caliper flush against the resected distal femur. Adjust the sizer so the posterior feet rest against the posterior condyles. The stylus should be pushed proximally until it "clicks". Each click represents one femoral size. The stylus should be pushed until the number of clicks equals the suspected femoral size.

The stylus size markings are read at the point where the stylus enters the back of the stylus holder. | A in FIGURE 6. The tip of the stylus should touch the most prominent aspect of the anterior cortex just proximal to the lateral anterior condyle. While performing this check, pay attention to not push on the caliper.

The femoral size is read through the windows in the anterior face of the sizing caliper. The resection block preparation holes are drilled through the 3° holes with the 3.2 mm (1/8") drill bit which features a collar at the correct depth. | FIGURE 7 This sets 3° of external rotation relative to the posterior condylar axis.

In the severe varus or valgus knee, the posterior condylar axis may not be a reliable reference for femoral rotation. Instead rotation may be set visually referencing the epicondylar line. If rotation must be set visually, the caliper features a central window with crosshairs. Remove the posterior feet and, with the caliper resting on the distal resection, the crosshair window should be aligned to the epicondylar line. | FIGURE 8 Once aligned, the peg holes are drilled through the 0° holes. Once holes are drilled, remove the sizing caliper and stylus assembly.

### Precision Pointer

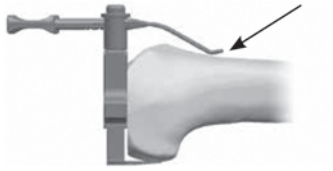

Make sure the caliper rests flat on the distal surface

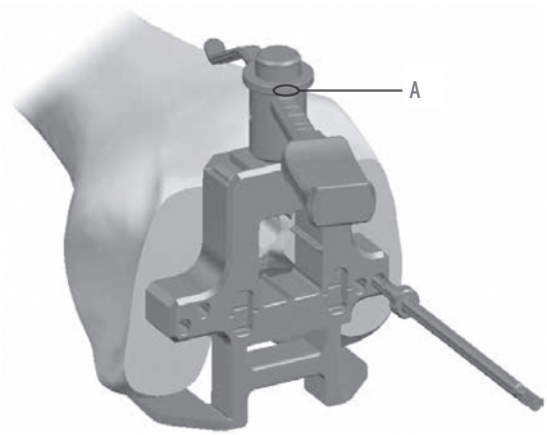


FIGURE 6

FIGURE 7

FIGURE 8

### Related Instruments:

Sizing Caliper

3.2mm (1.8") Dril Bit

Sizing Stylus

## 3. Anterior and Posterior Resections

**NOTE: Take care to protect the collateral ligaments during resections.**

Select the femoral resection block corresponding to the size indicated by the sizing caliper . If the femoral size is found to be between sizes, the bigger size should be utilized, since this choice will not jeopardize the option of downsizing . Place the pegs on the back of the femoral resection block into the holes drilled through the sizing caliper.

The femoral resection blocks may be used to double-check the femoral size. The distance between the pin outriggers on the sides of the block is the same width as the corresponding femoral component. | FIGURE 9 To confirm A/P size, an 8mm posterior resection gauge is available. It has the same thickness as the posterior condyles of sizes 1 through 5. When placed in the posterior slot of the resection block it is possible to determine if the proper amount of posterior condyle will be resected. | FIGURE 9 To check the risk of anterior notching the dual reference gauge should always be used. If it appears too much or too little of the posterior condyles are being removed or there will be anterior notching, a 2mm re-drill guide is available. | FIGURE 10 This allows the block peg holes to be re-drilled 2mm above or below the existing holes. To utilize the guide, remove the femoral resection block and place the re-drill guide in the existing holes. While maintaining pressure on the guide, re-drill through the appropriate holes and re-insert the femoral resection block in the new drilled holes. These holes do not have to be in the same location as the final implant pegs, which will be prepared with the femoral trials.

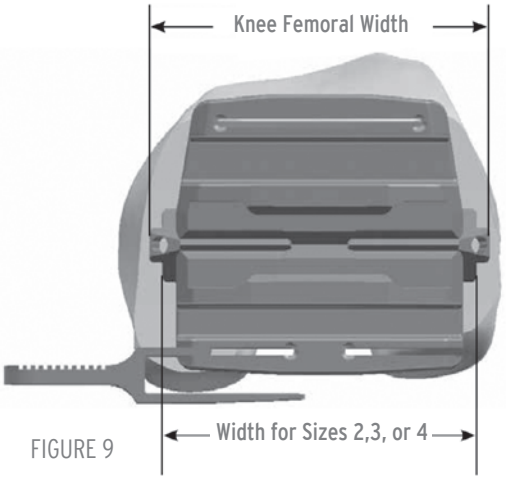


FIGURE 9

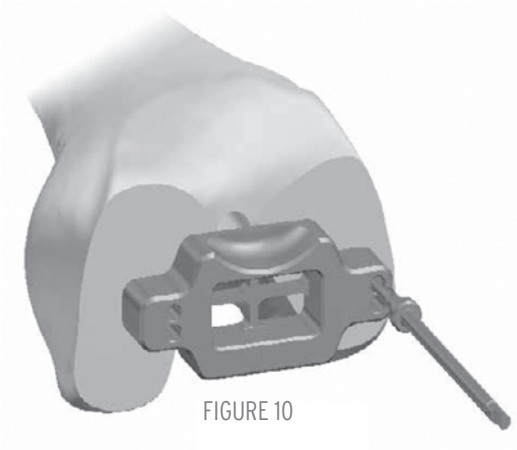

FIGURE 10

Stabilize the resection block against the bone using 3.2mm (1/8") diameter pins on the medial and lateral sides of the block. The tightening of the pins should be completed by using the T-handle in combination with the threaded pin driver.

The resection is then performed in this recommended order: anterior cut (1), then the posterior cut (2) followed by the posterior chamfer (3) and ending with the anterior chamfer (4). | FIGURE 11

**NOTE: A narrow saw blade must be used for the chamfer resections.**

After resections have been made, the pins are withdrawn. Assemble the resection block/femoral trial extractor on the slaphammer and slide it on the resection block for extraction. | FIGURE 12

# Surgical Technique

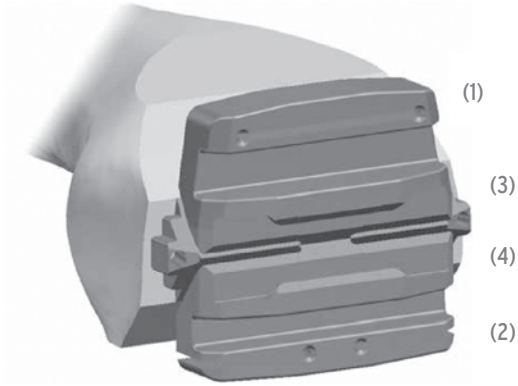


FIGURE 11

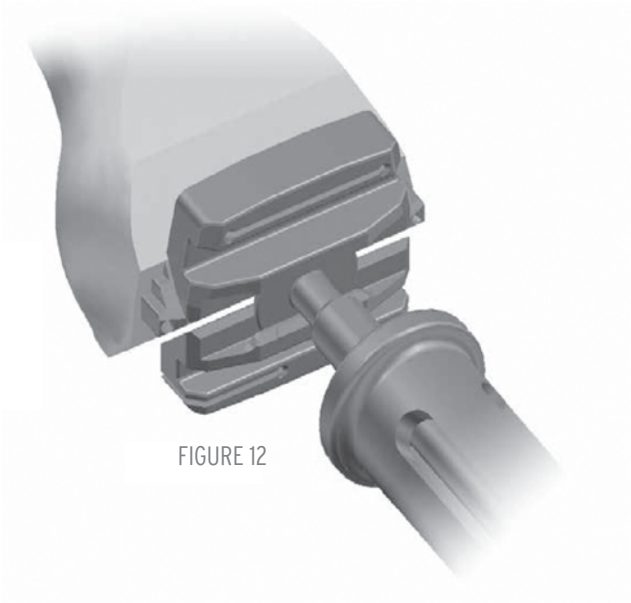

FIGURE 12

## Related Instruments:

Femoral Resection Block

Dual Reference Gauge

Resection Gauge

2mm Re-drill guide

Threaded Pin Driver

T-handle Reamer

Slaphammer

3.2mm (1/8") Diameter Pins)

Resection Block/Femoral Trial Extractor

In case it is determined a femoral downsizing is necessary for a proper balancing, position on existing holes a smaller femoral resection block than the one previously used.

SUPERICA femoral components are designed to maintain a common distance from stabilizer pegs to the anterior flange resection. Therefore you don't have to re-cut through the anterior slot.

Stabilize the resection block against the bone using 3.2mm (1/8") diameter pins on the medial and lateral sides of the block. Proceed with the resection of the posterior cut, followed by the posterior and anterior chamfer, as described in the "Anterior and Posterior Resections" chapter. |

## 4. Trochlear Groove Resection

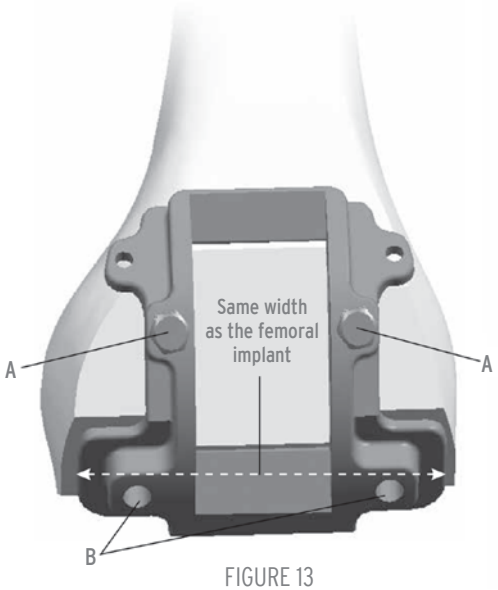

FIGURE 13

Select the trochlear groove resection block corresponding to the size indicated by the sizing caliper. Place the trochlear groove resection block on the femur. | FIGURE 13 The width of the block is the same M/L width as the femoral implant and dictates the final implant location. If the trochlear groove resection block is indicating an overhanging, you'll need to switch to the corresponding SUPERICA notch block specific trochlear groove resection block. | FIGURE 14

Some surgeons place the guide along the lateral edge of the femur to reproduce the natural Q-angle. Stabilize the trochlear groove resection block against the bone using 3.2mm (1/8") pins before resection. | A in FIGURE 14 The trochlear groove should be resected by using a 12.7mm (1/2") sawblade on the angled surface and along the sides of the central portion of the block. If your flexion/extension balance is correct, you can proceed with the preparation of the peg holes for the femoral implant. Using the 4.8mm (3/16") drill bits drill through the distal holes of the trochlear groove resection block. B in | FIGURE 14

**NOTE: The peg holes for the implant can also be prepared during the femoral trialing step. If the flexion/extension balance has not been properly achieved at this stage and a femoral re-cut is necessary, the femoral resection block cannot be re-mounted onto the femur due to the 3.2 mm (1/8") pegs on the back of the blocks once the 4.8mm (3/16") peg holes have been drilled.**

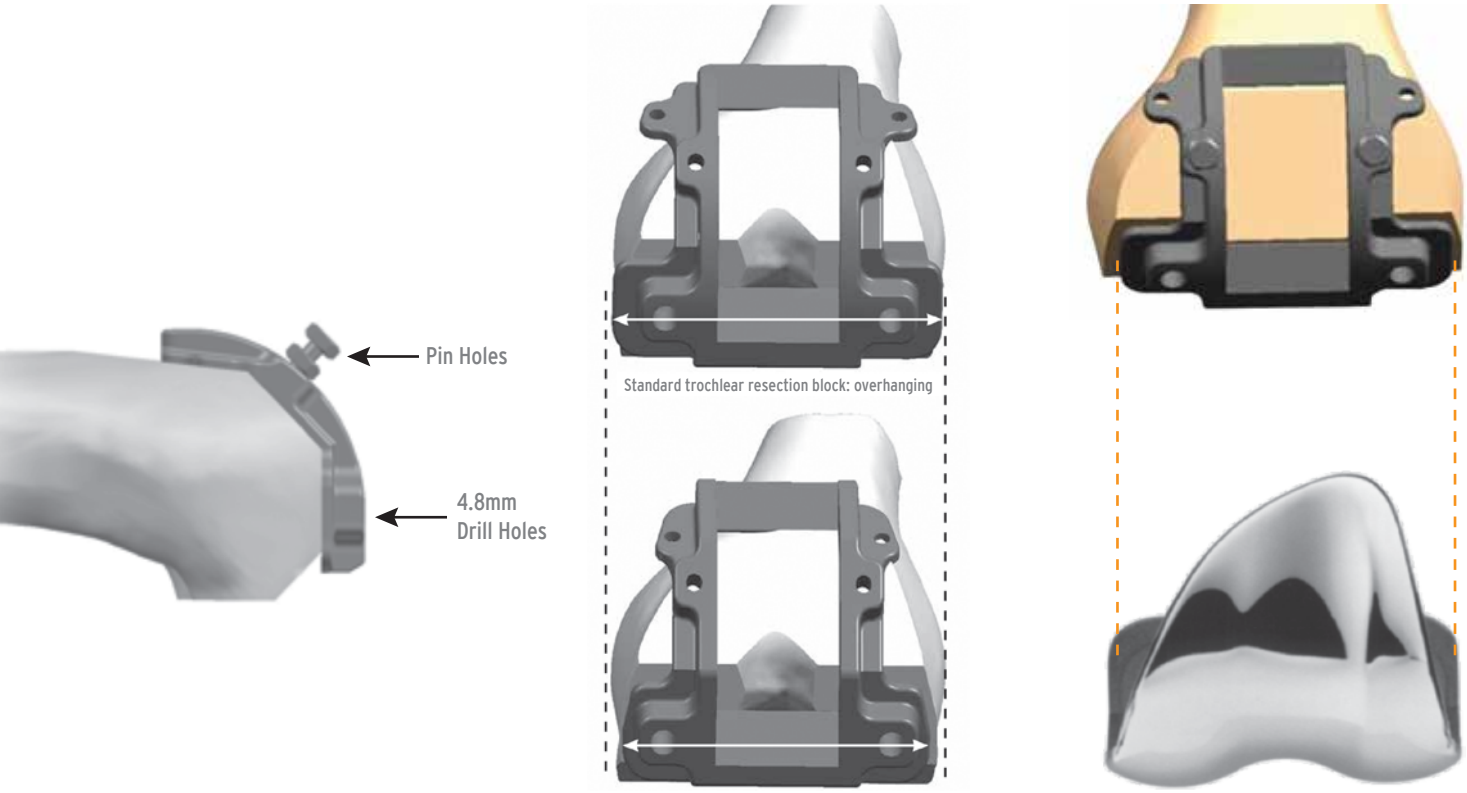

FIGURE 14

## Related Instruments:

Trochlear Groove Resection Block

3.2mm (1/8") Diameter Pins

4.8mm (3/16") Drill Bit

# Surgical Technique

FIGURE 15

## Extramedullary Tibial Resection

Position the ankle clamp of the extramedullary (EM) tibial resection guide against the lower leg just proximal to the malleoli. | FIGURE 15 In case a more stable initial fixation is required, the EM tibial resection guide can be assembled using the spiked component . Slide the appropriate left or right tibial resection guide onto the guide and adjust the guide until the resection slot is located a few millimeters below the lowest articular surface. | FIGURE 15 When the vertical axis of the guide is parallel to the mechanical tibial axis, it is positioned for a 3° posterior sloped resection. Attach the external alignment guide and slide the alignment rod through the appropriate TL or TR (Tibia Left or Tibia Right) hole. If the rod is parallel to the tibia, 3° slope is confirmed. | FIGURE 16

Drop the 2mm/10mm stylus into one of the holes on the resection guide and turn the resection guide adjustment knob | A in FIGURE 16 until the proper resection is found. | FIGURE 16 Generally the stylus is set to resect 2mm from the most deficient side and/or 10mm from the most prominent. Pin the resection guide to the proximal tibia through the "std" holes. The alignment guide and rod can be used to check alignment to the ankle. If the resection guide is detached, it can be moved distally 2mm if headless pins are used. Use of a divergent pin is recommended to prevent the resection block from vibrating off the pins during resections. | B in FIGURE 16

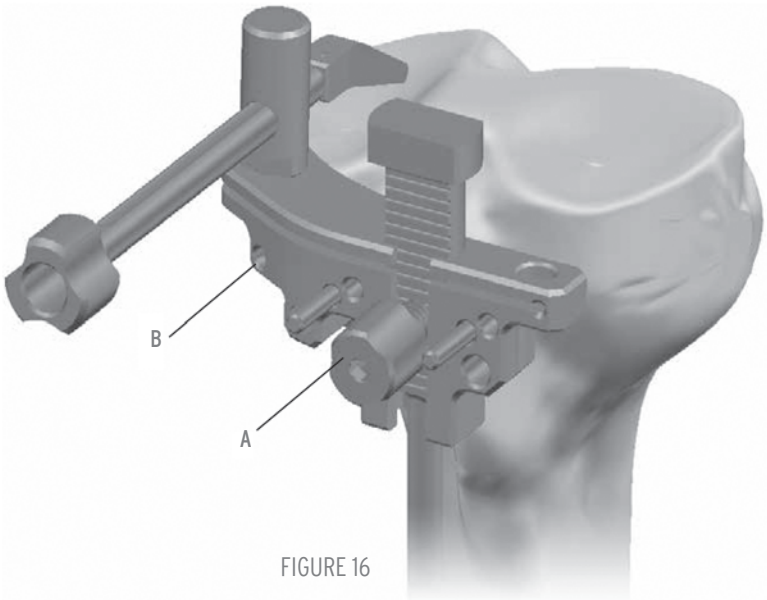


FIGURE 16

The correct height of the cut is determined based on preoperative x-ray templating and intraoperative status of the ligaments. A stylus is also available to help in determining the resection level. Drop the stylus into the resection guide hole: the stylus is set to resect 2mm from the most deficient side when it is positioned with the 0mm arm towards the tibial plateaux. It also features a 10mm arm which can be used to check the most prominent side. | FIGURE 17

Set the guide to the 0mm position to start. The height of the cut can be further fine tuned by turning the proximal knob of the guide. | A in FIGURE 18 By rotating the knob clockwise, the guide moves down.

For a proper stabilization of the guide, the spiked fixator can also be used. | FIGURE 19

FIGURE 17

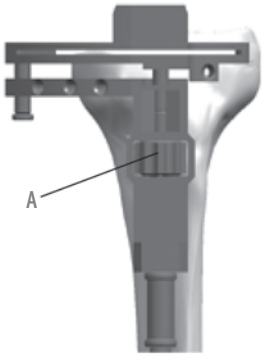


FIGURE 18

FIGURE 19

### Intramedullary Tibial Resection (Optional)

The 9.5mm (3/8") drill bit is used to penetrate the proximal tibia just posterior to the tibial ACL footprint. Insert the fluted IM reamer/rod into the tibial canal with the help of the T-handle. | FIGURE 20 Irrigate and aspirate several times to reduce the chance of a fat embolus. The reamer/ rod should be inserted to at least the mid isthmus. Slide the tibial alignment guide onto the IM reamer/rod and insert the appropriate tibial resection guide. | FIGURE 21 Turn the locking screw to lock the guide to the IM reamer/rod. | A in FIGURE 21 Use of a divergent pin is recommended to prevent the resection block from vibrating off the pins during resections. | B in FIGURE 21

FIGURE 20

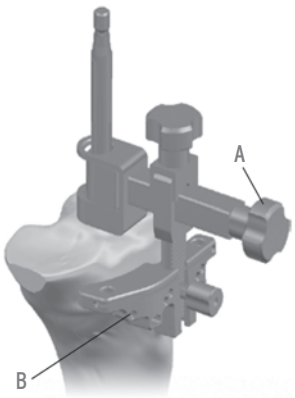


FIGURE 21

Drop the 2mm/10mm stylus into one of the holes on the resection guide to set the desired level of tibial resection. | A in FIGURE 22 Generally the stylus is set to resect 2mm from the most deficient side and/or 10mm from the most prominent. Pin the resection guide to the proximal tibia through the "std" holes. Before inserting a divergent pin, loosen the A/P adjustment knob and move the resection guide as close as possible to the tibia. | B in FIGURE 22 To detach the guide, loosen the resection guide knob | C in FIGURE 22 and extract the IM reamer/rod and alignment guide together. When the resection guide is detached from the guide, the block can be moved 2 mm distally if headless pins are used. Varus/valgus angulation can be checked to the ankle using the external alignment guide and rod . | FIGURE 23

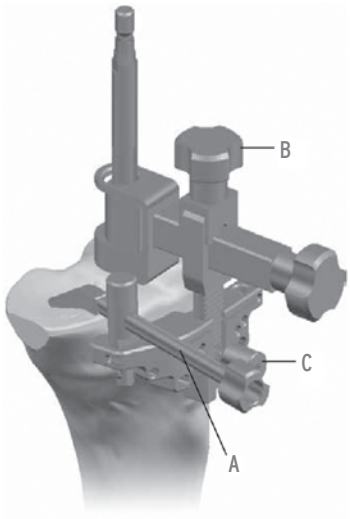


FIGURE 22

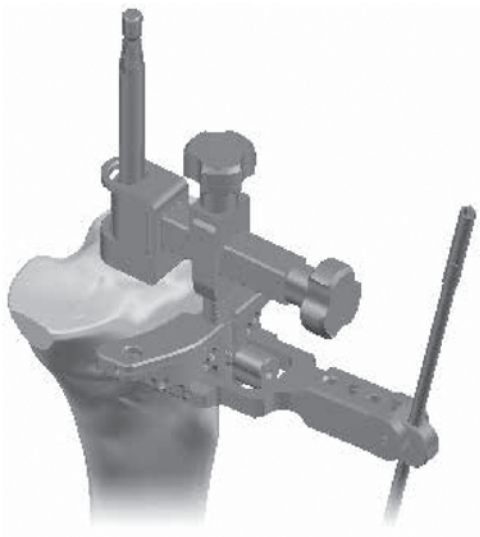

FIGURE 23

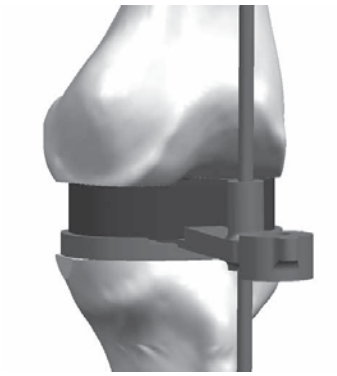

FIGURE 24

## Extension Gap Measurement

The extension gaps are measured following the tibial and the distal femoral resections. Select the appropriate tibial base and mount it on the tibial base handle . With the knee fully extended, insert the 10mm spacer block into the space between the femur and tibia. If the spacer block does not fit in extension additional bone resection might be required . Use progressively thicker spacer blocks until the appropriate tension is obtained. Slide the external alignment rod through the hole to check alignment. FIGURE 24 If the 10mm spacer block does not fit, use the minus 2mm spacer block to determine the amount of additional bone resection required to achieve full extension.

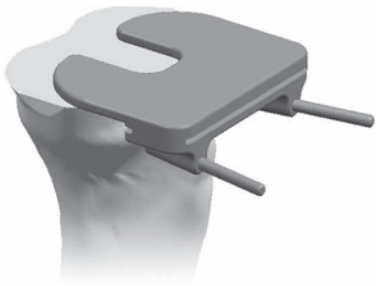

FIGURE 25

## 2mm Resection Guide

The 2mm resection guide is generally employed for use on the distal femoral and proximal tibial resections. To position the guide, place the anterior wings on the resected surface with the resection slot abutting the edge of the surface. | FIGURE 25 Two divergent pin holes are available for fixation.

## 6. Tibial Sizing and Trial Reduction

Care should be taken to ensure the tibial plateau is completely flat after the resection is made. A tibial base trial can be used to check the flatness of the surface.

**NOTE: In all SUPERICA Total Knee Inserts, the tibial insert size must match the femoral implant size. There are two tibial base sizes that can be used with any one size femoral component. For example a size 3 femoral implant can be used with either a size 3 or 3+ tibial base. |table 1**

FIGURE 26

| Femur | Insert | Tibia |
|---|---|---|
| 1 | 1 | 1 or 1+ |
| 2 | 2 | 2 or 2+ |
| 3 | 3 | 3 or 3+ |
| 4 | 4 | 4 or 4+ |
| 5 | 5 | 5 or 5+ |

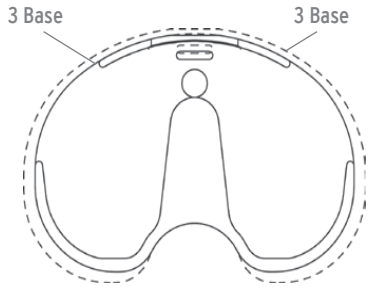


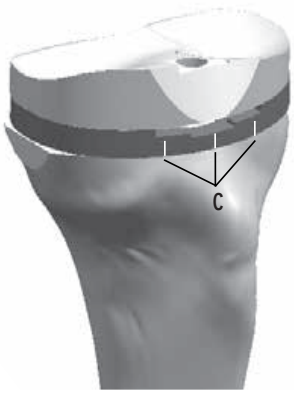


FIGURE 27

Assemble the appropriate trial tibial base to the trial base handle . The trial base is then placed onto the resected surface of the tibia and properly aligned (generally to the medial onethird of the tibial tubercle) to check overall coverage. If the tibial trial base size is too small, a "plus size" will provide additional tibial coverage. Place the appropriate size femoral trial on the distal femur using the femoral holder/driver . Insert the trial insert of appropriate size and thickness onto the trial base . If not done during the patella preparation, prepare the patellar peg holes, as described in the Patella Preparation chapter. Place the selected trial patella in place and complete the trial reduction. With the trial implants in place, perform an evaluation of the full range of motion to determine the final implant position. | FIGURE 26 If the final implant position is decided, the lines on the anterior portion of the tibial base can be used for marking the tibia to aid with alignment of the tibial base component during final implantation. | C in FIGURE 27

Reposition the tibial base trial and pin it to the tibia using short head anchoring pins through the anterolateral and posteromedial holes. | A in FIGURE 28 The alignment rod can be inserted through the handle to check alignment to the ankle. | B in FIGURE 28

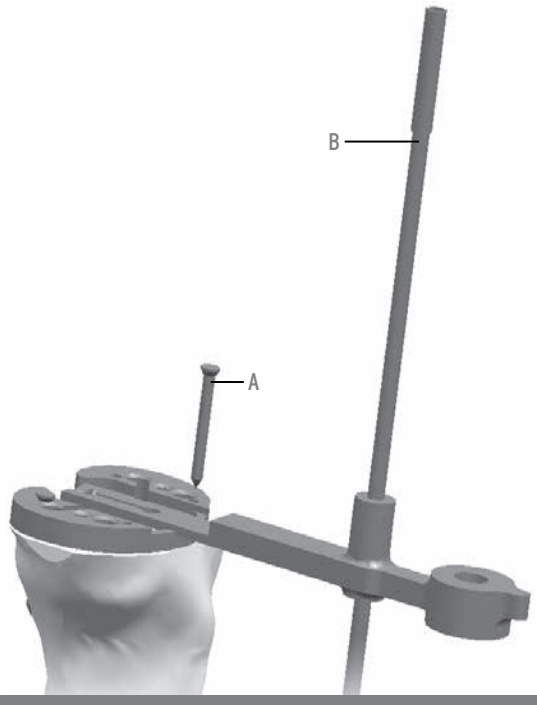


FIGURE 28

Table 2 | Instrument Sizing Matrix

| Tibial Base Trial | Reamer | Keel Punches |
|---|---|---|
| Size 1 | Line 1 | Size 1/1+/2 |
| Size 1+/2 | Line 1 | Size 1/1+/2 |
| Size 2+/3 | Line 2 | Size 2+/3/3+/4 |
| Size 3+/4 | Line 2 | Size 2+/3/3+/4 |
| Size 4+/5 | Line 3 | Size 4+/5/5+ |
| Size 5+ | Line 3 | Size 4+/5/5+ |

Table 2 should be used to determine the sizing compatibility of the instrumentation.

Attach the keel punch guide to the keel punch handle and secure it to the trial base by turning the knurled handle. | FIGURE 29 Using the threaded punch handle and appropriate press fit keel punch, plunge through the guide until the punch is fully seated and the punch collar is level with the edge of the guide. | A in FIGURE 30

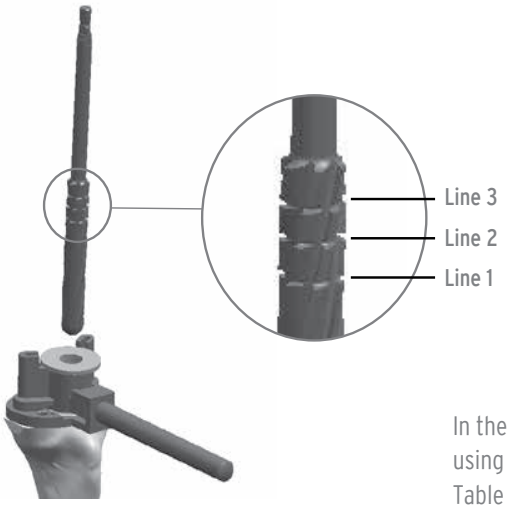


FIGURE 31

FIGURE 29

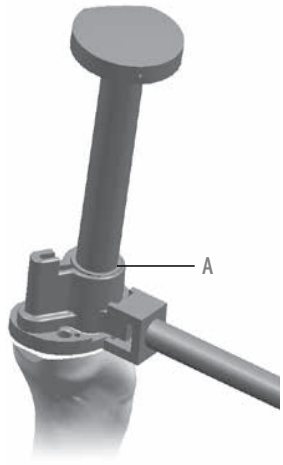


FIGURE 30

In the event of hard tibial bone, before punching, prepare the entry hole for the tibial stem using the 15 mm drill guide and the press fit reamer. | FIGURE 31 Referring to | FIGURE 31 and Table 2, ream through the drill guide to the appropriate line indicated on the reamer.

## Related Instruments:

EM Tibial Resection Guide

Spiked Component

Tibial Resection Guide

External Alignment Guide

Dual Reference Gauge



Alignment Rod

Stylus

Spiked Fixator

2mm/10mm Stylus

Keel Punch Guide

Keel Punch Handle

Press Fit Keel Punch

Minus 2mm Spacer Block

10mm Spacer Block

Spacer blocks (12mm - 25mm)

Tibial Base

Tibial Base Handle



Alignment Rod

## 7. Implants Insertion

### Tibial Base Insertion

The tibial bone bed is cleaned and bone cement is prepared and introduced according to standard recommendations. The inserter/extractor is utilized to implant the base by engaging the insert locking dovetail and impacting with a mallet until fully seated on bone. The monolithic tibial impactor can also be used to seat the tibial base. FIGURE 32

Optional: After the base has been inserted, the appropriate trial tibial insert can be used to recheck ligament and soft tissue balancing. | FIGURE 33 An additional trial insert pin may be placed through the trial insert into tibial base implant to provide a more secure construct during final assessment of joint stability. | A in FIGURE 33

**NOTE: The trial insert only engages the central locking detail and a gap will be Present along the anterior periphery of the insert. | B in FIGURE 33**

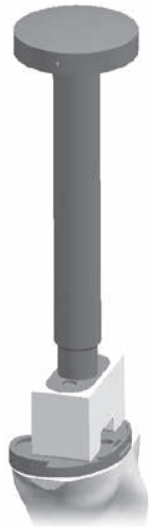

FIGURE 32

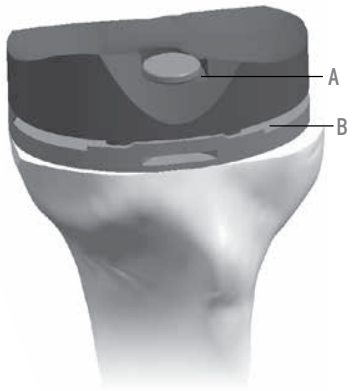


FIGURE 33

### Tibial Insert Insertion

Initial seating is accomplished by pushing the insert as far posterior as possible with hand pressure, paying special attention to engage the central dovetail and posterior captures of the tibial base. For final seating of the insert, two options are available. The 45° insert impactor may be utilized by placing the impactor tip in the anterior slot of the tibial insert. | FIGURES 34-35 and 38 The impactor handle should be at an angle slightly greater than 45°. Keeping the impactor tip in the slot, decrease the angle of the impactor handle until the tip is felt to impinge within the slot. This should be approximately 45°. While maintaining this 45° angle relative to the tibial base, apply several strong mallet blows directing the insert posteriorly. After the anterior edge of the insert has been pushed past the anterior capture of the tibial base, it will automatically drop behind the anterior capture and the insert face will be flush against the surface of the tibial base. | FIGURE 36

FIGURE 34

FIGURE 35

FIGURE 36

### Femoral Component Insertion

The femoral bone bed is cleaned and bone cement is prepared and introduced according to standard recommendations. The femoral impactor is utilized for final seating of the femoral component. | FIGURE 37

FIGURE 37

## Patella Option

**NOTE: Instead of utilizing a clamp for patellar resection some surgeons prefer a non-instrumented technique.**

With the leg extended, the patella is tilted to almost a 90° angle. The thickness of the patella is measured with the patella sizing caliper. The 8mm resection depth gauge is attached to the top of the resection guide with the lock screw. | A in FIGURE 38 Position the resection guide jaws parallel to the articular margin and securely clamp the guide to the bone; ensuring the gauge is contacting the apex of the articular surface. Remove the gauge and locking screw and make the patellar resection. The amount of bone to be resected is determined by trying to replicate with the patellar implant the thickness of the original patella and leaving at least 12mm of bone. | FIGURE 39

**NOTE: The patellar peg holes may also be prepared after the tibial and femoral resections.**

After having removed the resection guide, attach the appropriate drill guide to the patellar clamp . | A in FIGURE 40 The drill guides have grooves on their surfaces indicating the patellar diameter options. The appropriate tri-peg or central peg reamer is used to prepare the peg hole(s).

**NOTE: The tri-peg patellae have the same peg patterns between sizes and can be easily changed during trial reduction.**

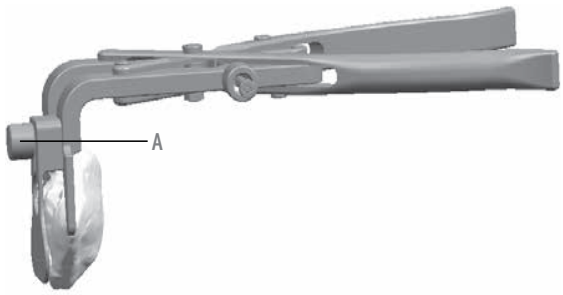


FIGURE 38

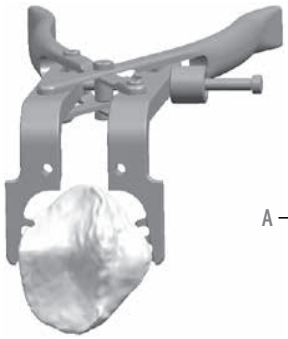

FIGURE 39

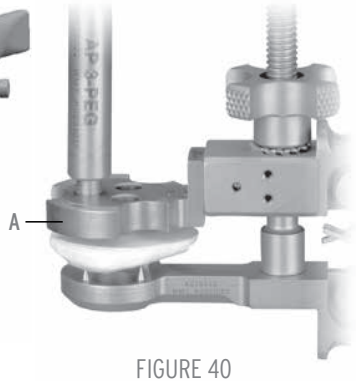


FIGURE 40

## Related Instruments:

Femoral Impactor

Trial Insert

Trial Insert Pin

Inserter/Extractor

Tibial Impactor

Resection Depth Gauge

Resection Guide

Tri-peg Drill Guide

Central Peg Drill Guide

Patellar Clamp

Tri-peg Reamer

Central Peg Reamer

## Postoperative Management

Postoperative care is the responsibility of the medical professional.

# Technique Overview

1. Distal Femur Preparation

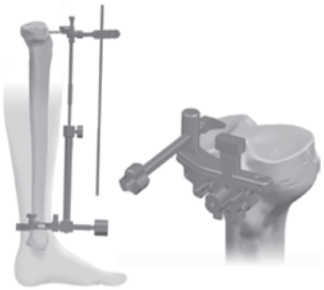

2a. Extramedullary Tibial Preparation

2b. Intramedullary Tibial Preparation

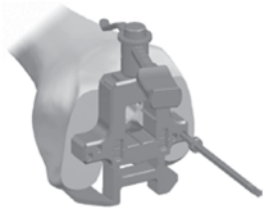

3. Femoral Sizing

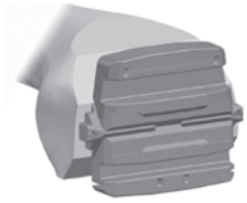

4. Femoral Resections

5. Flexion Gap Measurement

6. Trochlear Groove Resection

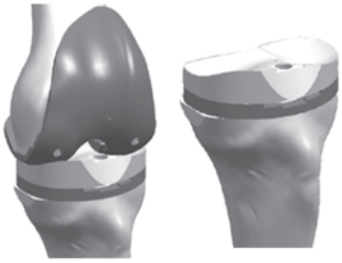

7. Tibial Sizing and Trial Reduction

8. Femoral Preparation

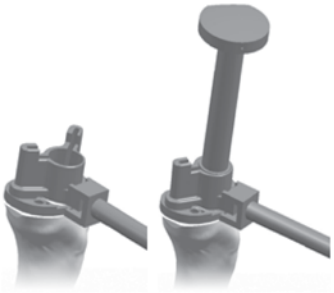

9. Keel Preparation

10. Tibial Base Insertion

11. Tibial Insert Insertion

12. Femoral Component Insertion

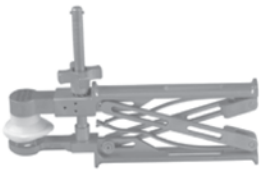

13. Patella Component Insertion

# Ordering Information

## Superica Cemented Femoral Components

| Code | Size |
|---|---|
| 65.5001 | Left Size 1 |
| 65.5002 | Left Size 2 |
| 65.5003 | Left Size 3 |
| 65.5004 | Left Size 4 |
| 65.5005 | Left Size 5 |
| 65.5101 | Right Size 1 |
| 65.5102 | Right Size 2 |
| 65.5103 | Right Size 3 |
| 65.5104 | Right Size 4 |
| 65.5105 | Right Size 5 |

Lot 22

## Superica Tibial Components (CoCr)

| Code | Size |
|---|---|
| 65.5201 | Size 1 |
| 65.5202 | Size 2 |
| 65.5203 | Size 3 |
| 65.5204 | Size 4 |
| 65.5205 | Size 5 |
| 65.5301 | Size 1 Plus |
| 65.5302 | Size 2 Plus |
| 65.5303 | Size 3 Plus |
| 65.5304 | Size 4 Plus |
| 65.5305 | Size 5 Plus |

# Ordering Information

## Superica Tibial Inserts

| Code | Size |
|---|---|
| 65.5010 | Left 10mm Size1 |
| 65.5012 | Left 12mm Size1 |
| 65.5014 | Left 14mm Ölçü1 |
| 65.5017 | Left 17mm Size1 |
| 65.5020 | Left 20mm Size1 |
| 65.5025 | Left 25mm Size1 |
| 65.5210 | Left 10mm Size2 |
| 65.5212 | Left 12mm Size2 |
| 65.5214 | Left 14mm Size2 |
| 65.5217 | Left 17mm Size2 |
| 65.5220 | Left 20mm Size2 |
| 65.5225 | Left 25mm Size2 |
| 65.5410 | Left 10mm Size3 |
| 65.5412 | Left 12mm Size3 |
| 65.5414 | Left 14mm Size3 |
| 65.5417 | Left 17mm Size3 |
| 65.5420 | Left 20mm Size3 |
| 65.5425 | Left 25mm Size3 |
| 65.5610 | Left 10mm Size4 |
| 65.5612 | Left 12mm Size4 |
| 65.5614 | Left 14mm Size4 |
| 65.5617 | Left 17mm Size4 |
| 65.5620 | Left 20mm Size4 |
| 65.5625 | Left 25mm Size4 |
| 65.5810 | Left 10mm Size5 |
| 65.5812 | Left 12mm Size5 |
| 65.5814 | Left 14mm Size5 |
| 65.5817 | Left 17mm Size5 |
| 65.5820 | Left 20mm Size5 |
| 65.5825 | Left 25mm Size5 |
| 65.5110 | Right 10mm Size1 |
| 65.5112 | Right 12mm Size1 |
| 65.5114 | Right 14mm Size1 |
| 65.5117 | Right 17mm Size1 |
| 65.5120 | Right 20mm Size1 |
| 65.5125 | Right 25mm Size1 |
| 65.5310 | Right 10mm Size2 |
| 65.5312 | Right 12mm Size2 |
| 65.5314 | Right 14mm Size2 |
| 65.5317 | Right 17mm Size2 |
| 65.5320 | Right 20mm Size2 |
| 65.5325 | Right 25mm Size2 |
| 65.5510 | Right 10mm Size3 |
| 65.5512 | Right 12mm Size3 |
| 65.5514 | Right 14mm Size3 |
| 65.5517 | Right 17mm Size3 |
| 65.5520 | Right 20mm Size3 |
| 65.5525 | Right 25mm Size3 |
| 65.5710 | Right 10mm Size4 |
| 65.5712 | Right 12mm Size4 |
| 65.5714 | Right 14mm Size4 |
| 65.5717 | Right 17mm Size4 |
| 65.5720 | Right 20mm Size4 |
| 65.5725 | Right 25mm Size4 |
| 65.5910 | Right 10mm Size5 |
| 65.5912 | Right 12mm Size5 |
| 65.5914 | Right14mm Size5 |
| 65.5917 | Right 17mm Size5 |
| 65.5920 | Right 20mm Size5 |
| 65.5925 | Right 25mm Size5 |

# Ordering Information

## Superica Xluhmwpe Inserts

| Code | Size |
|---|---|
| 65.7010 | Left 10mm Size1 |
| 65.7012 | Left 12mm Size1 |
| 65.7014 | Left 14mm Size1 |
| 65.7017 | Left 17mm Size1 |
| 65.7020 | Left 20mm Size1 |
| 65.7025 | Left 25mm Size1 |
| 65.7210 | Left 10mm Size2 |
| 65.7212 | Left 12mm Size2 |
| 65.7214 | Left 14mm Size2 |
| 65.7217 | Left 17mm Size2 |
| 65.7220 | Left 20mm Size2 |
| 65.7225 | Left 25mm Size2 |
| 65.7410 | Left 10mm Size3 |
| 65.7412 | Left 12mm Size3 |
| 65.7414 | Left 14mm Size3 |
| 65.7417 | Left 17mm Size3 |
| 65.7420 | Left 20mm Size3 |
| 65.7425 | Left 25mm Size3 |
| 65.7610 | Left 10mm Size4 |
| 65.7612 | Left 12mm Size4 |
| 65.7614 | Left 14mm Size4 |
| 65.7617 | Left 17mm Size4 |
| 65.7620 | Left 20mm Size4 |
| 65.7625 | Left 25mm Size4 |
| 65.7810 | Left 10mm Size5 |
| 65.7812 | Left 12mm Size5 |
| 65.7814 | Left 14mm Size5 |
| 65.7817 | Left 17mm Size5 |
| 65.7820 | Left 20mm Size5 |
| 65.7825 | Left 25mm Size5 |
| 65.7110 | Right 10mm Size1 |
| 65.7112 | Right 12mm Size1 |
| 65.7114 | Right 14mm Size1 |
| 65.7117 | Right 17mm Size1 |
| 65.7120 | Right 20mm Size1 |
| 65.7125 | Right 25mm Size1 |
| 65.7310 | Right 10mm Size2 |
| 65.7312 | Right 12mm Size2 |
| 65.7314 | Right 14mm Size2 |
| 65.7317 | Right 17mm Size2 |
| 65.7320 | Right 20mm Size2 |
| 65.7325 | Right 25mm Size2 |
| 65.7510 | Right 10mm Size3 |
| 65.7512 | Right 12mm Size3 |
| 65.7514 | Right 14mm Size3 |
| 65.7517 | Right 17mm Size3 |
| 65.7520 | Right 20mm Size3 |
| 65.7525 | Right 25mm Size3 |
| 65.7710 | Right 10mm Size4 |
| 65.7712 | Right 12mm Size4 |
| 65.7714 | Right 14mm Size4 |
| 65.7717 | Right 17mm Size4 |
| 65.7720 | Right 20mm Size4 |
| 65.7725 | Right 25mm Size4 |
| 65.7910 | Right 10mm Size5 |
| 65.7912 | Right 12mm Size5 |
| 65.7914 | Right 14mm Size5 |
| 65.7917 | Right 17mm Size5 |
| 65.7920 | Right 20mm Size5 |
| 65.7925 | Right 25mm Size5 |

# Ordering Information

## Superica Patellar Component

| Code | Size |
|---|---|
| 65.5426 | 26mm |
| 65.5429 | 29mm |
| 65.5432 | 32mm |
| 65.5435 | 35mm |

# Ordering Information

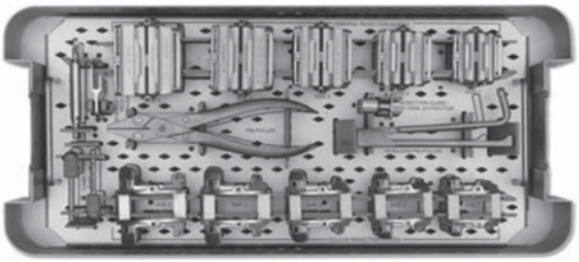

| Code | Size |
|---|---|
| **99.3148** | **Superica Femoral Cutter Guide Tray** |
| 99.3000 | Superica Femoral Cutter Guide Size-1 |
| 99.3001 | Superica Femoral Cutter Guide Size-2 |
| 99.3002 | Superica Femoral Cutter Guide Size-3 |
| 99.3003 | Superica Femoral Cutter Guide Size-4 |
| 99.3004 | Superica Femoral Cutter Guide Size-5 |
| 99.3005 | Trial Femur Extractor |
| 99.3006 | Headless Pin Puller |
| 99.3007 | 8 mm Gauge For 4 in 1 Resection Guide |
| 99.3008 | Ø4.8 mm Femoral Peg Drill |
| 99.3009 | Superica Notch Block Size-1 |
| 99.3010 | Superica Notch Block Size-2 |
| 99.3011 | Superica Notch Block Size-3 |
| 99.3012 | Superica Notch Block Size-4 |
| 99.3013 | Superica Notch Block Size-5 |
| 99.3014 | Knee Impactor/extractor |

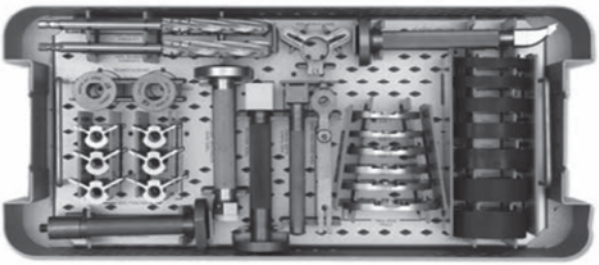

| Code | Size |
|---|---|
| **99.3149** | **Superica Tibial Guide Tray-1** |
| 99.3015 | Flexion Extension Gaps -2 mm |
| 99.3016 | Flexion Extension Gaps 10 mm |
| 99.3017 | Flexion Extension Gaps 12 mm |
| 99.3018 | Flexion Extension Gaps 14 mm |
| 99.3019 | Flexion Extension Gaps 17 mm |
| 99.3020 | Flexion Extension Gaps 20 mm |
| 99.3021 | Flexion Extension Gaps 25 mm |
| 99.3022 | Tibial Base Plate Size 1 |
| 99.3023 | Tibial Base Plate Size 2/1+ |
| 99.3024 | Tibial Base Plate Size 3/2+ |
| 99.3025 | Tibial Base Plate Size 4/3+ |
| 99.3026 | Tibial Base Plate Size 5/4+ |
| 99.3027 | Tibial Base Plate Size 6/5+ |
| 99.3028 | Tibial Base Plate Handle |
| 99.3029 | Keel Punch Guide Handle |
| 99.3030 | Tibial Impactor |
| 99.3031 | Tibia Base Extractor/impactor |
| 99.3032 | Keel Punch Handle |
| 99.3033 | Pressfit Keel Punch Size 1, 1+, 2 |
| 99.3034 | Pressfit Keel Punch Size 2+, 3, 3+, 4 |
| 99.3035 | Pressfit Keel Punch Size 4+, 5, 5+, 6 |
| 99.3036 | Oversize Keel Punch Size 1, 1+, 2 |
| 99.3037 | Oversize Keel Punch Size 2+, 3, 3+, 4 |
| 99.3038 | Oversize Keel Punch Size 4+, 5, 5+, 6 |
| 99.3039 | Oversize Tibial Drill Sleeve |
| 99.3040 | Pressfit Tibial Drill Sleeve |
| 99.3041 | Pressfit Tibial Drill |
| 99.3042 | Oversize Tibial Drill |
| 99.3043 | Keel Punch Guide |
| 99.3044 | Insert Impactor |

# Ordering Information

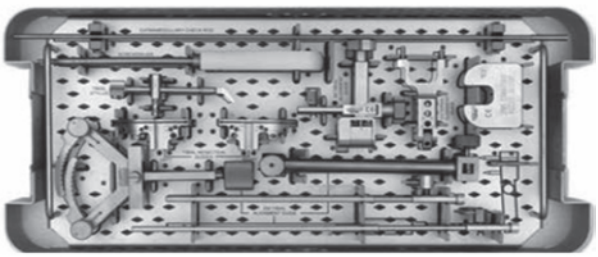

| Code | Size |
|---|---|
| **99.3150** | Superica Tibial Guide Tray-2 |
| 99.3045 | External Aligment Guide Body |
| 99.3046 | External Aligment Guide Extractor |
| 99.3047 | Tibial Resection Guide Ankle Clamp |
| 99.3048 | Tibial Resection Guide Long Shaft |
| 99.3049 | Tibial Resection Guide Body |
| 99.3050 | Tibial Resection Guide Short Shaft |
| 99.3051 | Tibial Guide Left |
| 99.3052 | Tibial Guide Right |
| 99.3053 | Im Tibial Aligment Guide Modified |
| 99.3054 | External Aligment Guide |
| 99.3055 | 2 mm Recut Guide |
| 99.3056 | Tibial Stylus |
| 99.3057 | External Check Rod |
| 99.3058 | Screwdriver |

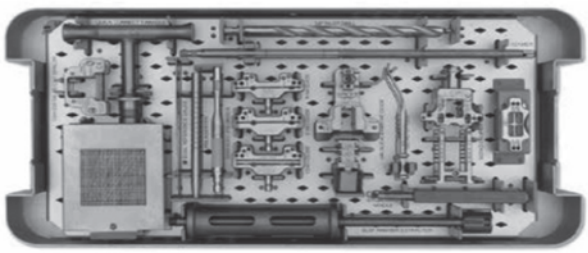

| Code | Size |
|---|---|
| **99.3151** | **Superica General Tray** |
| 99.3059 | 3/8" Drill |
| 99.3060 | 11" Reamer Rod |
| 99.3061 | Quick Connect T-handle |
| 99.3062 | Valgus Aligment Guide Spacer 7 mm |
| 99.3063 | Re-drill Guide |
| 99.3064 | Femoral Sizing Caliper / Pin Hole - Handle |
| 99.3065 | Femoral Sizing |
| 99.3066 | Femoral Stylus |
| 99.3067 | Valgus Aligment Guide |
| 99.3068 | Valgus Aligment |
| 99.3069 | Distal Resection Guide 9 mm |
| 99.3070 | Distal Resection Guide 11 mm |
| 99.3071 | Distal Resection Guide 9 mm - 13 mm |
| 99.3072 | Thereaded Pin Driver |
| 99.3073 | Pin Inserter |
| 99.3074 | Dual Reference Gauge |
| 99.3075 | Thereaded Stabilizing |
| 99.3076 | Slap Hammer |
| 99.3077 | Pin Caddy |
| 99.3078 | Tibial Base Fixation Pin With Tapered Head |
| 99.3079 | Flat Head Fixation Pin 45mm |
| 99.3080 | 80 mm Headless Fixation Pin Without Groove |
| 99.3081 | 125 Quick Disconnect Drill Bit |
| 99.3082 | Drill Bits Only |
| 99.3083 | Drill Bit 1/8" W/quick Disconnect 100mm |
| 99.3084 | 1/8" Drill Bit W/ Stop |
| 99.3085 | Trial Tibial Insert Pin |

# Ordering Information

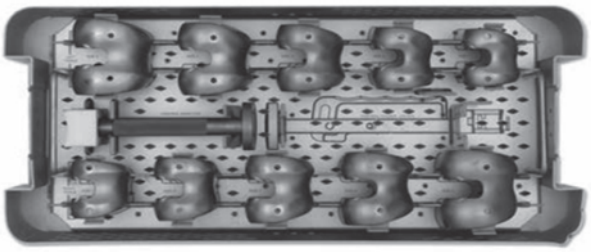

| Code | Size |
|---|---|
| **99.3152** | **Superica Femoral Trial Tray** |
| 99.3086 | Trial Femur Left Size 1 |
| 99.3087 | Trial Femur Left Size 2 |
| 99.3088 | Trial Femur Left Size 3 |
| 99.3089 | Trial Femur Left Size 4 |
| 99.3090 | Trial Femur Left Size 5 |
| 99.3091 | Trial Femur Right Size 1 |
| 99.3092 | Trial Femur Right Size 2 |
| 99.3093 | Trial Femur Right Size 3 |
| 99.3094 | Trial Femur Right Size 4 |
| 99.3095 | Trial Femur Right Size 5 |
| 99.3096 | Femoral Impactor |
| 99.3148 | Femoral Holder Driver |

# Ordering Information

| Code | Size |
|---|---|
| **99.3153** | **Superica Left Insert Trials Tray** |
| 99.3097 | Trial Insert Left Size 1 10 mm |
| 99.3098 | Trial Insert Left Size 1 12 mm |
| 99.3099 | Trial Insert Left Size 1 14 mm |
| 99.3100 | Trial Insert Left Size 1 17 mm |
| 99.3101 | Trial Insert Left Size 2 10 mm |
| 99.3102 | Trial Insert Left Size 2 12 mm |
| 99.3103 | Trial Insert Left Size 2 14 mm |
| 99.3104 | Trial Insert Left Size 2 17 mm |
| 99.3105 | Trial Insert Left Size 3 10 mm |
| 99.3106 | Trial Insert Left Size 3 12 mm |
| 99.3107 | Trial Insert Left Size 3 14 mm |
| 99.3108 | Trial Insert Left Size 3 17 mm |
| 99.3109 | Trial Insert Left Size 4 10 mm |
| 99.3110 | Trial Insert Left Size 4 12 mm |
| 99.3111 | Trial Insert Left Size 4 14 mm |
| 99.3112 | Trial Insert Left Size 4 17 mm |
| 99.3113 | Trial Insert Left Size 5 10 mm |
| 99.3114 | Trial Insert Left Size 5 12 mm |
| 99.3115 | Trial Insert Left Size 5 14 mm |
| 99.3116 | Trial Insert Left Size 5 17 mm |

| Code | Size |
|---|---|
| **99.3154** | **Superica Right Insert Trials Tray** |
| 99.3117 | Trial Insert Right Size 1 10 mm |
| 99.3118 | Trial Insert Right Size 1 12 mm |
| 99.3119 | Trial Insert Right Size 1 14 mm |
| 99.3120 | Trial Insert Right Size 1 17 mm |
| 99.3121 | Trial Insert Right Size 2 10 mm |
| 99.3122 | Trial Insert Right Size 2 12 mm |
| 99.3123 | Trial Insert Right Size 2 14 mm |
| 99.3124 | Trial Insert Right Size 2 17 mm |
| 99.3125 | Trial Insert Right Size 3 10 mm |
| 99.3126 | Trial Insert Right Size 3 12 mm |
| 99.3127 | Trial Insert Right Size 3 14 mm |
| 99.3128 | Trial Insert Right Size 3 17 mm |
| 99.3129 | Trial Insert Right Size 4 10 mm |
| 99.3130 | Trial Insert Right Size 4 12 mm |
| 99.3131 | Trial Insert Right Size 4 14 mm |
| 99.3132 | Trial Insert Right Size 4 17 mm |
| 99.3133 | Trial Insert Right Size 5 10 mm |
| 99.3134 | Trial Insert Right Size 5 12 mm |
| 99.3135 | Trial Insert Right Size 5 14 mm |
| 99.3136 | Trial Insert Right Size 5 17 mm |

# Ordering Information

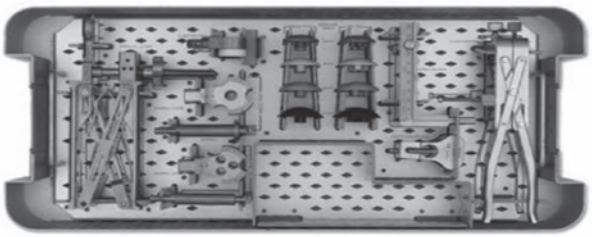

| Code | Size |
|---|---|
| **99.3155** | **Superica Patella Tray** |
| 99.3137 | End Mill Guides Single Post |
| 99.3138 | Parallel Clamp |
| 99.3139 | Clamp Seater |
| 99.3140 | Patella Trial Size 26 |
| 99.3141 | Patella Trial Size 29 |
| 99.3142 | Patella Trial Size 32 |
| 99.3143 | Patella Trial Size 35 |
| 99.3144 | Depth Gauges |
| 99.3145 | Clamp Assembly |
| 99.3146 | End Mills - Tri Post |
| 99.3147 | Patella Sizing Caliper |

# Accessories

## Centralizer

| Size Ref. | Cat. No. | Description | Inner Dia. | Outer Dia. |
|---|---|---|---|---|
| Universal | 1100-C | Centralizer<br>Material: UHMWPE | 8 | 10.5 |

## Restrictor

Lot 1, Lot 4, Lot 15

| Size Ref. | Cat. No. | Description | Inner Dia. | Outer Dia. |
|---|---|---|---|---|
| Universal | 1100-P | Restrictor<br>Material: UHMWPE | 3 | 9 |

## AK Knee Joint Spacer Mold

| Size Ref. | Cat. No. | Description | Femoral ML (mm) |
|---|---|---|---|
| S | 5901-0002 | AK Knee Joint Spacer Mold | 60 |
| M | 5901-0003 | | 65 |
| L | 5901-0004 | | 70 |

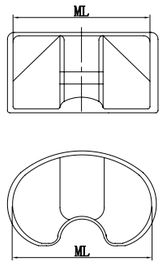

## AK Hip Joint Spacer Mold

| Size Ref. | Cat. No. | Head Dia.<br>D (mm) | Stem Length<br>L (mm) |
|---|---|---|---|
| 44# | 5904-0044 | 44 | 175 |
| 48# | 5904-0048 | 48 | 202 |
| 52# | 5904-0052 | 52 | 216 |

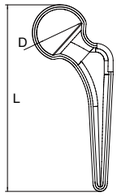

## Bone Cement Applicator

Bone cement applicator is the third generation cement technic which is designed to inject cement into intramedullary. This instrument may evenly inject cement into femur during hip joint replacement surgery.

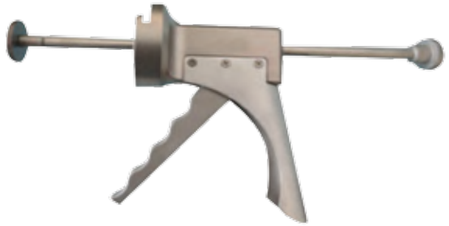

## Bone Cement Application Kit

The plastic made cement sleeve assemblies are disposable for keeping bone cement. The system of devices may reduce possibilities of microbial contamination of the bone cement; also reduce the release of monomer vapors into environment; optimize mixing of the cement and make it possible for obtaining high and low viscosity cement.

## Tornado Disposable Surgical Lavage Unit

Tornado Disposable Surgical Lavage Unit is a high quality, single use high pressure pulse lavage system for arthroplasty surgery. The product was developed with the specific requirements of surgeons in mind.
Tornado Disposable Surgical Lavage Unit is a ready-to-use product for joint arthroplasty and trauma surgery. The system is pre-packed with irrigation and suction nozzles which are customized for the respective usage area. The purpose is to give the surgeon different options to choose from, depending on what kind of surgery he/she will perform.

# Multi-functional system

## Multi-function host

Reaming Drill

Bone Drill

Craniotomy Drill&Mill

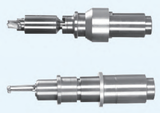

Canulate Drill

Reciprocating Saw & Sternum Saw

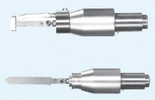

TPLO Saw

Oscillating Saw

K- wire

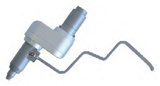

## Plaster saw

## Accessories

## E150 Oscillating Saw

System E

Oscillations(osc/min):0-11000cpm
Swing:≥4.5°
Noise:≤75dB
Sterilization temperature:135℃
Operation(V) voltage:9.6V
Battery Type:Ni-MH Green Battery
Battery capacity:2100mAh

## C240 Canulate Drill

System C

Speed :0-1250rpm
Operation(V) voltage:14.4V
Torque:3N-m
Radial circle runout:≤0.10mm
Sterilization temperature:135℃
Axial movement:≤0.5mm
Noise:≤75dB
Battery capacity:2000mAh

## E100 Multi Function Drill

System E

Speed Range(Key Chuck attachment):0-1200rpm
Torque(Key Chuck attachment):3.5N-m
Speed Range(Reaming Attachment):0-400rpm
Torque(Reaming Attachment):10N-m
Operation(V) voltage:9.6V
Battery Volumn:2100mAh
Radial circle run-out:≤0.1mm
Biggest dirll bit diameter:8mm
Axial movement:≤0.5mm
Diameter of Cannulation:6.5mm

## C150 Oscillating Saw

System C

## C350 Oscillating Saw

Oscillations(osc/min):0-15000cpm
Sterilization temperature:155℃
Operation(V) voltage:14.4V
Noise:≤75dB
Battery capacity:2000mAh
Battery Type:Ni-MH Green Battery

HEALMEDS SCIENCE AND TECHNOLOGY

# Surgical power tools


Address：The Binhai New Area of Tianjin Huayuan Industrial Zone (outer ring) Haitai South Block C No. 28 1–201

Tel：86–22–83750061–610 Mobile：+86–133–5209–7710

Website：www.healmeds.net Website：healmeds.en.alibaba.com

E–mail：haskj_tianxl@163.com

TIANJIN HEALTH SCI-TECH CO.,LTD.

## A110 BONE DRILL

System A

Speed:0-1200rpm
Radial circle run-out:≤0.1mm
Torque:2N-m
Axial movement:≤0.5mm
Noise:≤75dB
Battery capacity:1600mAh
Operation(V) voltage:14.4V
Biggest drill bit diameter:8mm

## A150 Oscillating Saw

System A

Oscillations(osc/min):0-15000cpm
Autoclavable:135℃
Operation(V) voltage:14.4V
Noise:≤75dB
Battery capacity:1600mAh
Battery Type:Ni-MH Green Battery

## B110 Small Bone Drill

Systerm B

No-load speed:0-1200r/min
Chuck gripper diameter:≤4mm
Radial runout:≤0.10mm
Operation(V) voltage:7.2V
Peak torque:2.9N-m
Battery capacity:1400mAh
No-load noise:≤45dB(A)
Battery Type:Ni-MH Green Battery

## B100 Small Bone Multi-function Power Tools

Systerm B

No-load speed:0-1200r/min
Chuck gripper diameter:≤4mm
Radial runout:≤0.10mm
Oscillations(osc/min):0-16000com
Peak torque:2.9N-m
Sterilization temperature:155℃
No-load noise:≤45dB(A)
Battery capacity:1400mAh
Noise:≤75dB
Battery Type:Ni-MH Green Battery
Operation(V) voltage:7.2V

## A130 Acetabulum Reaming Drill

System A

Speed:0-350rpm
Operation(V) voltage:14.4V
Torque:5 N-m
Radial circle run-out:≤0.1mm
Sterilization temperature:135℃
Axial movement:≤0.5mm
Noise:≤75dB
Battery capacity:1600mAh

## A140 A240 Canulate Drill

Speed：0-800rpm
Torque：3N-m

System A

## A340 A440 Canulate Drill

Speed：0-1200rpm
Torque：2N-m

Sterilization temperature:135℃
Axial movement:≤0.5mm
Noise:≤75dB
Battery capacity:1600mAh
Operation(V) voltage:14.4V
Biggest drill bit diameter:8mm
Radial circle run-out:≤0.1mm
Diameter of Cannulation:4.5mm

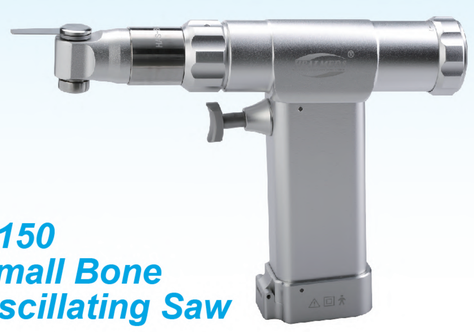

## B150 Small Bone Oscillating Saw

Systerm B

Oscillations(osc/min):0-16000cpm
Noise:≤75dB
Sterilization temperature:155℃
Operation(V) voltage:7.2V
Battery Type:Ni-MH Green Battery
Battery capacity:1400mAh

## C130 Acetabulum Reaming Drill

System C

Speed Range:0-350rpm
Noise:≤75dB
Torque:5.5N-m
Operation(V) voltage:14.4V
Battery Type:Ni-MH Green Battery
Battery capacity:2000mAh

www.evolutisfrance.com

# Evolutis

CREATEUR FABRICANT

There is no joint in the human body on which the locomotion has imposed a heavier load, and there is no joint either more prompt to experience the abuse.*

Arthur Steindler, M.D.

Rolflex TONIC®

Tech Note #4

# Basic Design Considerations

Evolutis MOTION INSIDE

# Rolfex TONIC: Basic Design Considerations

## Congruency

*The congruency of the polyethylene components has been calculated to offer a maximum of contact between the bearing surfaces of the polyethylement with the articulating metal components. It includes the articulation between the condyles in both extension and flexion, and the articulation between the patella and the trochlear groove.*

*Condyles and tibial insert:*
*The complete congruency in extension is achieved for both PS and UC types of articulation when associated with a rotating bearing. In rotating bearings, the insert will always have the same size as the condyles, therefore, there is no compromise on the congruency of the surface contacts.*

*When selecting a fixed bearing prosthesis, and in order to reduce the stress induced by the femoral rotation during flexion, the frontal radii of the tibial insert have sligthly been increased to allow for the internal or external rotation of the condyles with the insert.*

***Femoro-tibial congruency:***
*The femoro-tibial congruency is complete in the central section of the prosthesis: the radius of frontal plane is constant and egal for all sizes of condyles and tibial inserts at 52.5mm. Progressively, the radius increases medially and laterally to allow for matching of sizes.*

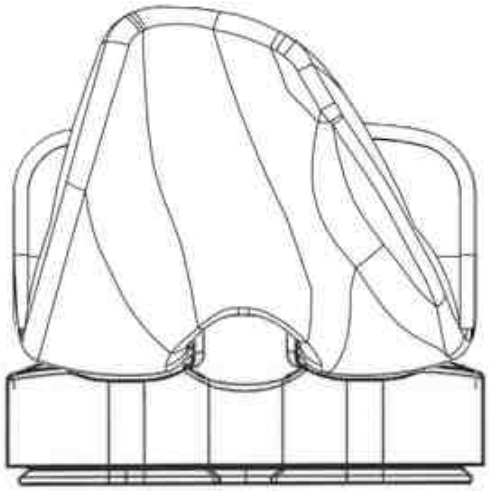

*Patella and trochlear groove:*
*The design of the patellas is fully congruent with the trochlear groove for 50% of its surface. This design combines a spherical center (radius of 15mm) and conical edges, so that the congruency is preserved even when the patella is tilted and not completely parallel to the condyles.*

***Patellar congruency:***
*Above: patellar plan is parallel to the condyles plan. Congruency of 50% of patellar surface.*
*Below: patellar plan is deviated by 3° respective to the condyles plan. Congruency remains at 50% of patellar surface.*

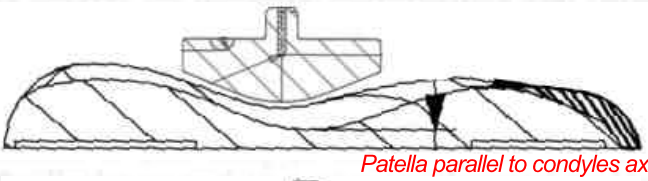

*Patella parallel to condyles axis*

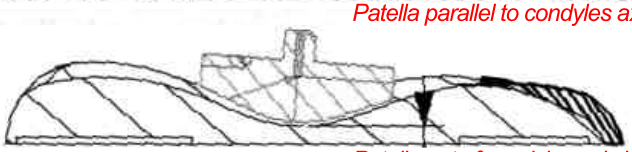

*Patella out of condyles axis by 3°*

## Angulation of Patellar Groove

***The Patellar groove*** *is oriented at 6° with respect to the femoro-tibial joint line, which angle, together with a high lateral trochlear border, provides a protection against the lateral sub-dislocation of the patella at the stage of patellar engagement and at the early flexion process.*

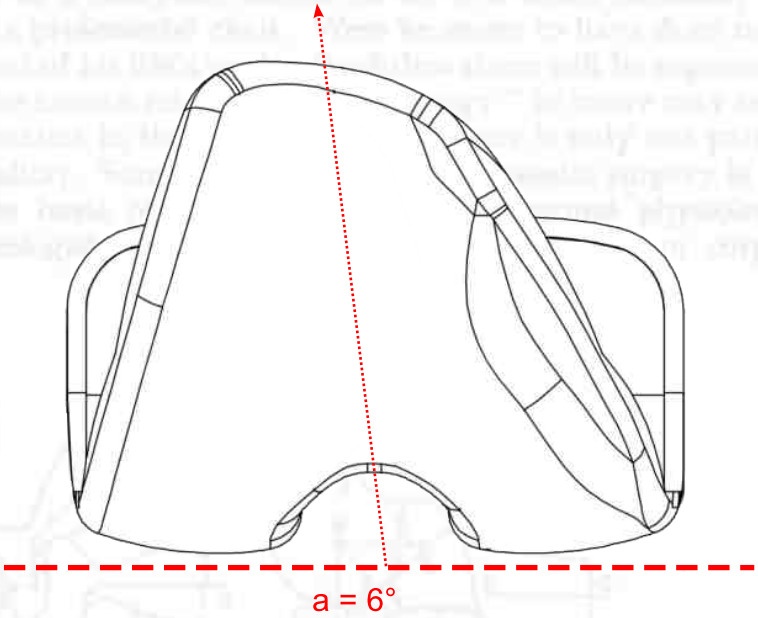


## Dimensioning of the tibial inserts to limit rotational impingement

*In all cases, the dimension of the tibial inserts (polyethylene) are adapted to the femoral dimensions, especially in the M/L dimension.*
*This means that the dimensions of the tibial inserts are always smaller than the dimensions of the tibial baseplate to avoid any impingement risk of the polyethylene insert with the surrounding soft tissues (Lateral ligament, popliteous structures...).*
*Examples: the dimensions of the tibial baseplate size 4 are 71x46.5, and the corresponding polyethylene insert measures 68x40: 3mm less in the M/L plan.*
*For the size 5, the respective dimensions are 74x49 and 71x41.5.*
*In addition the tibial inserts are chamfered so that the insert will not exhibit sharp edges in cases of contact with the surrounding structures.*

***Dimensions of the tibial insert and baseplate (Size 2 example):*** *the tibial insert is 3mm more narrow in the M/L plan than the tibial baseplate. In addition, the chamfers allow for a large dimension tolerance in cases of excessive rotation.*

***The Rotating Tibial Insert*** *includes chamfers to soften the impingement contact with the surrounding tissues in case of excessive rotation.*

# REFERENCES

1 • PS or UC Condyles / *Condyles PS ou UC*
2 • PS or UC Inserts / *Plateaux PS ou UC*
3 • Fixed or Rotating Baseplate / *Embases Fixe ou Rotatoire*
4 • Cementless or Cemented versions / *Versions Sans Ciment ou Cimentée*
5 • 20 and 40mm Extension Keel / *Quilles d'Extension 20 et 40mm*
6 • Femoral and Tibial Augments / *Cales Fémorales et Tibiales*

## Condyles / Condyles

| | PS / *Postéro-Stabilisés* | | | | UC / *Ultra-congruents* | | | |
|---|---|---|---|---|---|---|---|---|
| | Cemented / *A cimenter* | | Cementless / *Sans ciment* | | Cemented / *A cimenter* | | Cementless / *Sans ciment* | |
| | R / D | L / G | R / D | L / G | R / D | L / G | R / D | L / G |
| Sz./T 0 | G33 FPCD00 | G33 FPCG00 | G33 FPRD00 | G33 FPRG00 | G33 FUCD00 | G33 FUCG00 | G33 FURD00 | G33 FURG00 |
| Sz./T 1 | G33 FPCD01 | G33 FPCG01 | G33 FPRD01 | G33 FPRG01 | G33 FUCD01 | G33 FUCG01 | G33 FURD01 | G33 FURG01 |
| Sz./T 2 | G33 FPCD02 | G33 FPCG02 | G33 FPRD02 | G33 FPRG02 | G33 FUCD02 | G33 FUCG02 | G33 FURD02 | G33 FURG02 |
| Sz./T 3 | G33 FPCD03 | G33 FPCG03 | G33 FPRD03 | G33 FPRG03 | G33 FUCD03 | G33 FUCG03 | G33 FURD03 | G33 FURG03 |
| Sz./T 4 | G33 FPCD04 | G33 FPCG04 | G33 FPRD04 | G33 FPRG04 | G33 FUCD04 | G33 FUCG04 | G33 FURD04 | G33 FURG04 |
| Sz./T 5 | G33 FPCD05 | G33 FPCG05 | G33 FPRD05 | G33 FPRG05 | G33 FUCD05 | G33 FUCG05 | G33 FURD05 | G33 FURG05 |
| Sz./T 6 | G33 FPCD06 | G33 FPCG06 | G33 FPRD06 | G33 FPRG06 | G33 FUCD06 | G33 FUCG06 | G33 FURD06 | G33 FURG06 |
| Sz./T 7 | G33 FPCD07 | G33 FPCG07 | G33 FPRD07 | G33 FPRG07 | G33 FUCD07 | G33 FUCG07 | G33 FURD07 | G33 FURG07 |
| Sz./T 8 | G33 FPCD08 | G33 FPCG08 | G33 FPRD08 | G33 FPRG08 | G33 FUCD08 | G33 FUCG08 | G33 FURD08 | G33 FURG08 |
| Sz./T 9 | G33 FPCD09 | G33 FPCG09 | G33 FPRD09 | G33 FPRG09 | G33 FUCD09 | G33 FUCG09 | G33 FURD09 | G33 FURG09 |

| Patella Rotule | |
|---|---|
| ø23 | G33 ROT023 |
| ø25 | G33 ROT025 |
| ø28 | G33 ROT028 |

## Tibial Baseplate / Embase tibiale

| | Fixed / *Fixe* | | | | Rotating / *Rotatoire* | | | |
|---|---|---|---|---|---|---|---|---|
| | Cemented / *A cimenter* | | Cementless / *Sans ciment* | | Cemented / *A cimenter* | | Cementless / *Sans ciment* | |
| | R / D | L / G | R / D | L / G | R / D | L / G | R / D | L / G |
| Sz./T 0 | G33 TFCD00 | G33 TFCG00 | G33 TFRD00 | G33 TFRG00 | G33 TMCD00 | G33 TMCG00 | G33 TMRD00 | G33 TMRG00 |
| Sz./T 1 | G33 TFCD01 | G33 TFCG01 | G33 TFRD01 | G33 TFRG01 | G33 TMCD01 | G33 TMCG01 | G33 TMRD01 | G33 TMRG01 |
| Sz./T 2 | G33 TFCD02 | G33 TFCG02 | G33 TFRD02 | G33 TFRG02 | G33 TMCD02 | G33 TMCG02 | G33 TMRD02 | G33 TMRG02 |
| Sz./T 3 | G33 TFCD03 | G33 TFCG03 | G33 TFRD03 | G33 TFRG03 | G33 TMCD03 | G33 TMCG03 | G33 TMRD03 | G33 TMRG03 |
| Sz./T 4 | G33 TFCD04 | G33 TFCG04 | G33 TFRD04 | G33 TFRG04 | G33 TMCD04 | G33 TMCG04 | G33 TMRD04 | G33 TMRG04 |
| Sz./T 5 | G33 TFCD05 | G33 TFCG05 | G33 TFRD05 | G33 TFRG05 | G33 TMCD05 | G33 TMCG05 | G33 TMRD05 | G33 TMRG05 |
| Sz./T 6 | G33 TFCD06 | G33 TFCG06 | G33 TFRD06 | G33 TFRG06 | G33 TMCD06 | G33 TMCG06 | G33 TMRD06 | G33 TMRG06 |
| Sz./T 7 | G33 TFCD07 | G33 TFCG07 | G33 TFRD07 | G33 TFRG07 | G33 TMCD07 | G33 TMCG07 | G33 TMRD07 | G33 TMRG07 |
| Sz./T 8 | G33 TFCD08 | G33 TFCG08 | G33 TFRD08 | G33 TFRG08 | G33 TMCD08 | G33 TMCG08 | G33 TMRD08 | G33 TMRG08 |

| Tibial Keel Quille Tibiale | | |
|---|---|---|
| ø13 | l.20mm | G33 QT1320 |
| ø13 | l.40mm | G33 QT1340 |
| ø13 | l.70mm | G33 QT1370 |
| ø13 | l.110mm | G33 QT13110 |
| ø15 | l.20mm | G33 QT1520 |
| ø17 | l.20mm | G33 QT1720 |

## Tibial insert / Plateau tibial

| | Fixed / *Fixe* | | | | Rotating / *Rotatoire* | | | | | | |
|---|---|---|---|---|---|---|---|---|---|---|---|
| | PS / *Postéro-stabilisé* | | | | PS / *Postéro-stabilisé* | | | | UC / *Ultra-congruent* | | |
| | h.10mm | h.12mm | h.15mm | h.18mm | h.10mm | h.12mm | h.15mm | h.18mm | h.10mm | h.12mm | h.15mm |
| Sz./T 0 | G33 IFP010 | G33 IFP012 | G33 IFP015 | - | G33 IMP010 | G33 IMP012 | G33 IMP015 | - | G33 IMU010 | G33 IMU012 | G33 IMU015 |
| Sz./T 1 | G33 IFP110 | G33 IFP112 | G33 IFP115 | G33 IFP118 | G33 IMP110 | G33 IMP112 | G33 IMP115 | G33 IMP118 | G33 IMU110 | G33 IMU112 | G33 IMU115 |
| Sz./T 2 | G33 IFP210 | G33 IFP212 | G33 IFP215 | G33 IFP218 | G33 IMP210 | G33 IMP212 | G33 IMP215 | G33 IMP218 | G33 IMU210 | G33 IMU212 | G33 IMU215 |
| Sz./T 3 | G33 IFP310 | G33 IFP312 | G33 IFP315 | G33 IFP318 | G33 IMP310 | G33 IMP312 | G33 IMP315 | G33 IMP318 | G33 IMU310 | G33 IMU312 | G33 IMU315 |
| Sz./T 4 | G33 IFP410 | G33 IFP412 | G33 IFP415 | G33 IFP418 | G33 IMP410 | G33 IMP412 | G33 IMP415 | G33 IMP418 | G33 IMU410 | G33 IMU412 | G33 IMU415 |
| Sz./T 5 | G33 IFP510 | G33 IFP512 | G33 IFP515 | G33 IFP518 | G33 IMP510 | G33 IMP512 | G33 IMP515 | G33 IMP518 | G33 IMU510 | G33 IMU512 | G33 IMU515 |
| Sz./T 6 | G33 IFP610 | G33 IFP612 | G33 IFP615 | G33 IFP618 | G33 IMP610 | G33 IMP612 | G33 IMP615 | G33 IMP618 | G33 IMU610 | G33 IMU612 | G33 IMU615 |
| Sz./T 7 | G33 IFP710 | G33 IFP712 | G33 IFP715 | G33 IFP718 | G33 IMP710 | G33 IMP712 | G33 IMP715 | G33 IMP718 | G33 IMU710 | G33 IMU712 | G33 IMU715 |
| Sz./T 8 | G33 IFP810 | G33 IFP812 | G33 IFP815 | G33 IFP818 | G33 IMP810 | G33 IMP812 | G33 IMP815 | G33 IMP818 | G33 IMU810 | G33 IMU812 | G33 IMU815 |
| Sz./T 9 | - | - | - | - | G33 IMP910 | G33 IMP912 | G33 IMP915 | G33 IMP918 | G33 IMU910 | G33 IMU912 | G33 IMU915 |

## Augment / Cale

| | Tibial / *Tibiale* | | Femoral / *Fémorale* | | | |
|---|---|---|---|---|---|---|
| | | | Distal / *Distale* | | Posterior / *Postérieure* | |
| | h.5mm | h.10mm | h.4mm | h.8mm | h.4mm | h.8mm |
| Sz./T. 0 | G33 CT0500 | G33 CT1000 | G33 CFD400 | G33 CFD800 | G33 CFP400 | G33 CFP800 |
| Sz./T. 1 | G33 CT0501 | G33 CT1001 | G33 CFD401 | G33 CFD801 | G33 CFP401 | G33 CFP801 |
| Sz./T. 2 | G33 CT0502 | G33 CT1002 | G33 CFD402 | G33 CFD802 | G33 CFP402 | G33 CFP802 |
| Sz./T. 3 | G33 CT0503 | G33 CT1003 | G33 CFD403 | G33 CFD803 | G33 CFP403 | G33 CFP803 |
| Sz./T. 4 | G33 CT0504 | G33 CT1004 | G33 CFD404 | G33 CFD804 | G33 CFP404 | G33 CFP804 |
| Sz./T. 5 | G33 CT0505 | G33 CT1005 | G33 CFD405 | G33 CFD805 | G33 CFP405 | G33 CFP805 |
| Sz./T. 6 | G33 CT0506 | G33 CT1006 | G33 CFD406 | G33 CFD806 | G33 CFP406 | G33 CFP806 |
| Sz./T. 7 | G33 CT0507 | G33 CT1007 | G33 CFD407 | G33 CFD807 | G33 CFP407 | G33 CFP807 |
| Sz./T. 8 | G33 CT0508 | G33 CT1008 | G33 CFD408 | G33 CFD808 | G33 CFP408 | G33 CFP808 |

**Materials:**
Condyles: CoCr according ISO5832-4 (cemented) or CoCr according ISO5832-4 coated with macroporous Ti (cementless)
Tibial Baseplate: CoCr according ISO5832-4 (cemented) and UHMWPE according ISO 5834-1 & 2 or CoCr according ISO5832-4 coated with macroporous Ti (cementless) and UHMWPE according ISO 5834-1 & 2
Tibial Insert: PEXEL® UHMWPE according ISO 5834-1 & 2 and Stainless Steel according ISO 5832-1
Patella: PEXEL® UHMWPE according ISO 5834-1 & 2 and Stainless Steel according ISO 5832-1
Tibial keel: CoCr according ISO5832-12
Augment: CoCr according ISO5832-4
**Vacuum packaging VacUPac®. Gamma ray sterilised.**


**CE2797**
Evolutis
10 Place des Tuiliers, 42720 Briennon, France
**Tel : +33. (0)477.60.79.99 – Fax : +33. (0)477.60.79.90**


Designed and Manufactured in France
**www.evolutisfrance.com**


Oct 2020 / Ref.: EN_ROLFLEX TONIC Basic Design #4

www.evolutisfrance.com

Evolutis

CREATEUR FABRICANT

# Minimally Invasive Hip Surgery

## Dedicated Instruments

# *Chirurgie Mini-Invasive de Hanche*

## *Instruments dédiés*

Evolutis MOTION INSIDE

# Rasp Handles
## *Manches Porte-Râpe*

Lot 18

Curved Posterior Handle
*Manche Postérieur Courbe*
**H01 066**

Double-Offset Antero-Lateral Handle
*Manche Antéro-Externe Double Offset*
**H01 067 & H01 068**

40° Anterior Handle
*Manche Antérieur à 40°*
**H01 065**

**H01 067 & H01 068**

# Cup Impaction Handles
## *Manches pour Cupule*

Curved Handle for Standard Cup
*Manche Courbe pour Cupule Standard*
**H76 001**

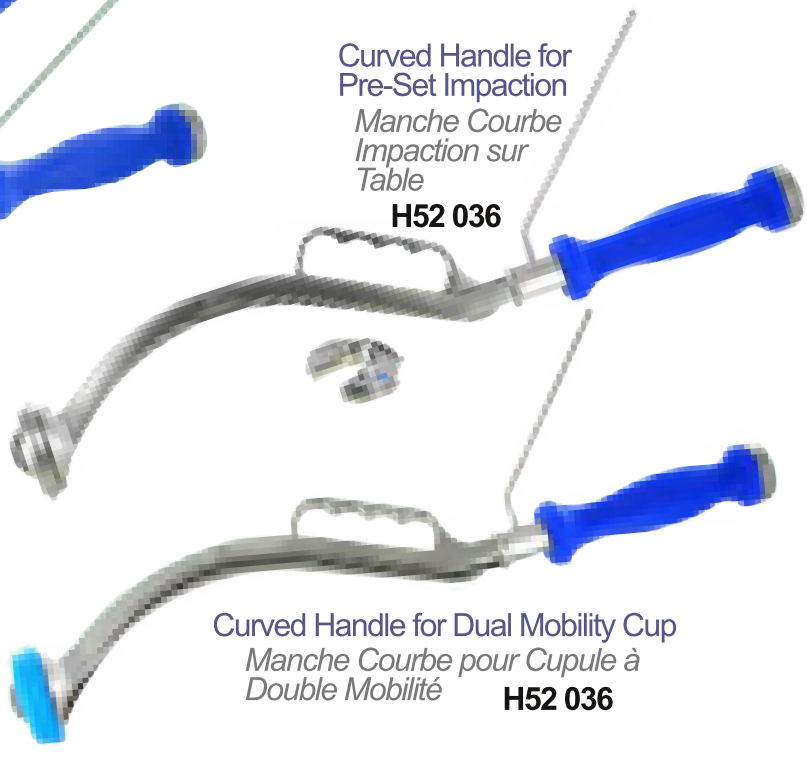

Curved Handle for Pre-Set Impaction
*Manche Courbe Impaction sur Table*
**H52 036**

Freeliner Pre-Set Impaction Plate
*Platine d'Impaction sur Table (Freeliner)*
**H76 012** to/à **H76 017**

Dual Mobility Impaction Plate
*Platine d'Impaction pour Double Mobilité*
**H52 P45** to/à **H52 P65**

Curved Handle for Dual Mobility Cup
*Manche Courbe pour Cupule à Double Mobilité*
**H52 036**

# Retractors for Anterior Approach
## *Ecarteurs pour Voie Antérieure*

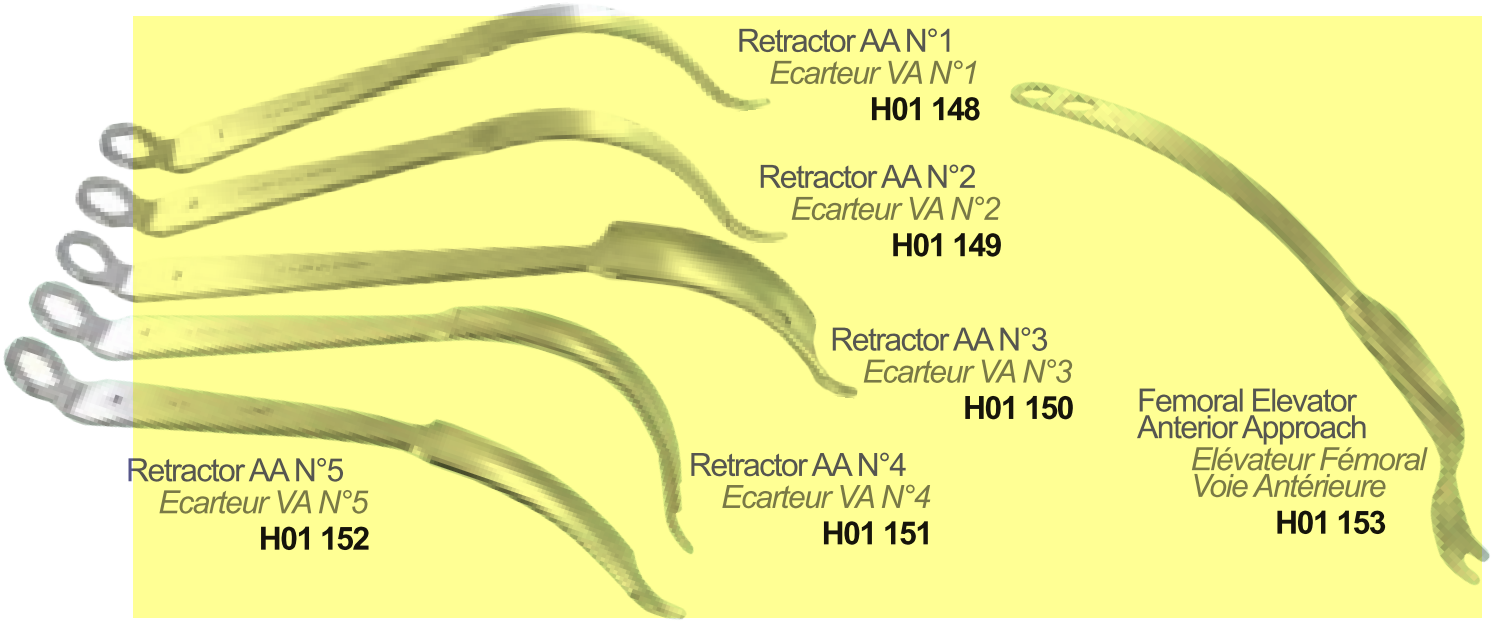

Retractor AA N°1
*Ecarteur VA N°1*
**H01 148**

Retractor AA N°2
*Ecarteur VA N°2*
**H01 149**

Retractor AA N°3
*Ecarteur VA N°3*
**H01 150**

Retractor AA N°4
*Ecarteur VA N°4*
**H01 151**

Retractor AA N°5
*Ecarteur VA N°5*
**H01 152**

Femoral Elevator
Anterior Approach
*Elévateur Fémoral*
*Voie Antérieure*
**H01 153**

# Charnley Frame
## *Cadre de Charnley*

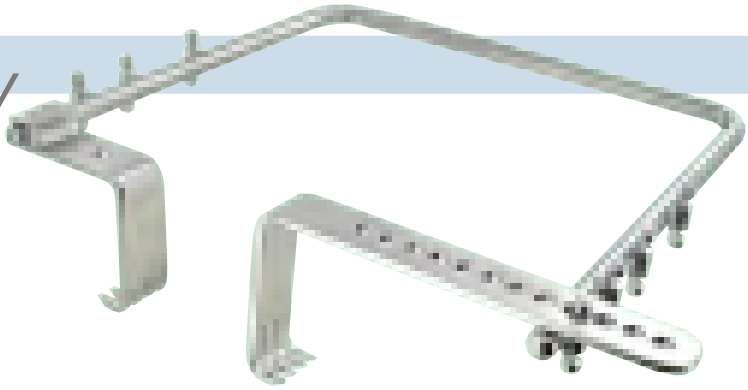

NARROW (25mm) Bent Hohmann Retractor
(2 lengths: 96 & 130mm)
*Ecarteur Hohmann à Palette FINE (25mm)*
*(2 longueurs : 96 & 130mm)*
**H01 046 - H01 146**

LARGE (40mm)
Bent Hohmann Retractor
(2 lengths: 96 & 130mm)
*Ecarteur Hohmann*
*à Palette LARGE (40mm)*
*(2 longueurs : 96 & 130mm)*
**H01 045 - H01 145**

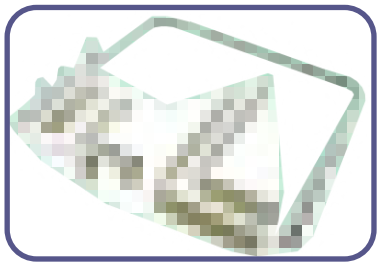

Charnley Frame only
*Cadre seul* **H01 041**

Short Blade (Fixed) 2 lengths: 62 & 82mm
*Crochet Court (Fixe) 2 longueurs : 62 et 82mm*
**H01 043 - H01 050**

Long Blade (Adjustable) 2 lengths: 72 & 92mm
*Crochet Long (Réglable) 2 longueurs : 72 & 92mm*
**H01 042 - H01 044**

# Miscellaneous
## *Divers*

Beckmann Static Retractor
*L.300mm H.50mm*
*Ecarteur Statique Beckmann*
*L.300mm H.50mm*
**B80 566**

Femoral Elevator
Posterior Approach
*Elevateur Fémoral*
*Voie Postérieure*
**H01 047**

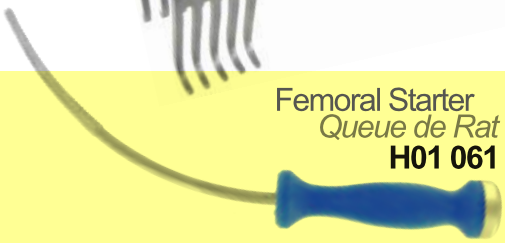

Femoral Starter
*Queue de Rat*
**H01 061**

Offset Acetabular
Reamer Handle
*Manche de Fraise*
*à Cotyle Décalé*

# REFERENCES

| | |
|---|---|
| *Manche de Râpe Courbe voie Post.*<br>Curved Rasp Handle Post. approach | H01 066 |
| *Manche de Râpe 40° voie Ant.*<br>40° Rasp Handle Ant. Approach | H01 065 |
| *Manche de Râpe Double-Offset voie Ant.-Externe*<br>Double-Offet Rasp Handle Ant.-Lateral approach | H01 067 & H01 068 |

| | |
|---|---|
| *Ecarteur statique type "Charnley"*<br>Charnley type frame | H01 041 |
| *Palette réglable pour écarteur statique (l.72 ou 92mm)*<br>Long static retractor blade for Charnley frame (l.72 or 92mm) | H01 042 & H01 044 |
| *Palette fixe pour écarteur statique (l. 62 ou 82mm)*<br>Short static retractor blade for Charnley frame (l.62 or 82mm) | H01 043 & H01 050 |
| *Ecarteur Hohmann à palette FINE 25mm (l.96 ou 130mm)*<br>NARROW 25mm Bent Hohmann retractor (l.96 or 130mm) | H01 045 & H01 145 |
| *Ecarteur Hohmann à palette LARGE 40mm (l.96 ou 130mm)*<br>LARGE 40mm Bent Hohmann retractor (l.96 or 130mm) | H01 046 & H01 146 |

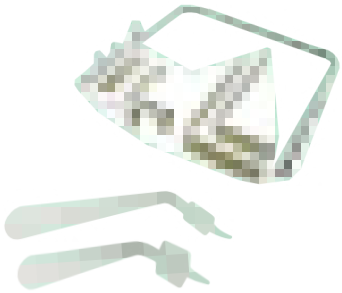

| | |
|---|---|
| *Impacteur Cupule Courbe à Gâchette*<br>Curved Cup Impactor with Trigger | H52 036 |
| *Platines pour Impaction DM*<br>Impaction plates for DM cup | H52 P45 à/to H52 P65 |
| *Platines pour Impaction Sur Table Freeliner*<br>Impaction Plates for Pre-set Freeliner | H76 012 à/to H76 017 |

| | |
|---|---|
| *Impacteur Cupule Courbe à Vis*<br>Curved Cup Impactor with Screw | H76 001 |
| *Tournevis pour Manche Cupule Courbe*<br>Screwdriver for Curved Cup Handle | H76 003 |
| *Vis pour Manche Cupule Courbe*<br>Screw for Curved Cup Handle | H76 002 |
| *Tige de version à 45°*<br>45° version alignment rod | H76 019 |

| | |
|---|---|
| *Ecarteur Voie Antérieure #1*<br>#1 Anterior Approach retractor | H01 148 |
| *Ecarteur Voie Antérieure #2*<br>#2 Anterior Approach retractor | H01 149 |
| *Ecarteur Voie Antérieure #3*<br>#3 Anterior Approach retractor | H01 150 |
| *Ecarteur Voie Antérieure #4*<br>#4 Anterior Approach retractor | H01 151 |
| *Ecarteur Voie Antérieure #5*<br>#5 Anterior Approach retractor | H01 152 |

| | |
|---|---|
| *Elévateur Fémur voie POST.*<br>Femoral Elevator POST. Approach | H01 047 |
| *Elévateur Fémur voie ANT.*<br>Femoral Elevator ANT. Approach | H01 153 |
| *Ecarteur Statique Beckmann 300mm*<br>Beckmann Static retractor 300mm | B80566 |
| Queue de Rat<br>Femoral Starter | H01 061 |

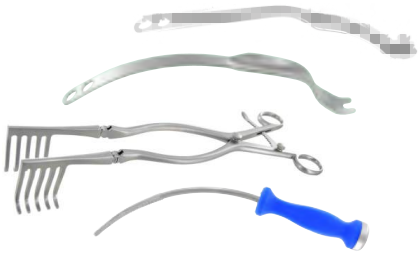

Evolutis
MOTION INSIDE

Evolutis
Avenue de la Libération, 42720 Briennon, France
Tel : +33. (0)477.60.79.99 – Fax : +33. (0)477.60.79.90

Designed and Manufactured in France

www.evolutisfrance.com

Oct 2017 / BI_MIS INSTR DOC H99

# Rolflex TONIC

Evolutis

www.evolutisfrance.com

www.evolutisfrance.com

Rolflex TONIC

# GOALS

- Design rationale including the most recent scientific knowledges:
  - Improved anatomic adaptation (dimensions, size adaptation)
  - Gender and or ethnic differences
  - Kinematics as physiologic as possible (roll-back + freedom in rotation)
  - Socio-cultural needs taken into account (Hi-Flex)
- Attractive instrumentation set, choice of technique and training origins, and suitable for all levels of surgical skills

Evolutis

# RANGE ROLFLEX TONIC

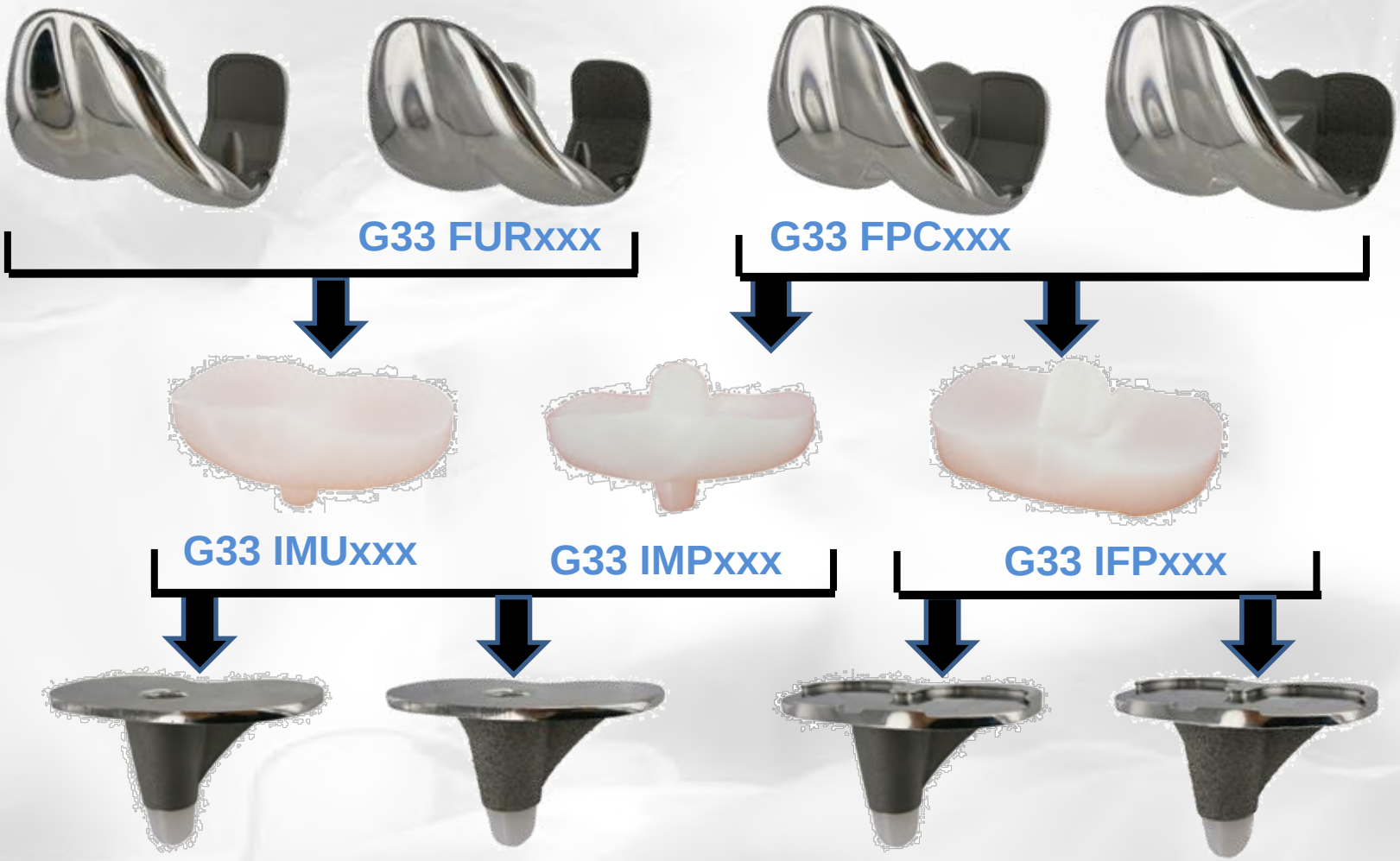


Evolutis

www.evolutisfrance.com

www.evolutisfrance.com

Rolflex TONIC

## GENERAL DESIGN CHARACTERISTICS

- Large range
  - tibia (9 sizes = 72 ref)
  - femur (10 sizes = 80 ref)
  - inserts (4 thicknesses = 94 ref)
- Reduced M/L dimensions
- Cemented or highly porous cementless
- Asymetrical tibial baseplates (lateral compartment shorter) with conical keel and 2 wings
- Suitable with longer keels and tibial augments

Evolutis

www.evolutisfrance.com

Rolflex TONIC

# PS VERSION

- HI-FLEX
- Combination of 3rd condyle and cam-post kinematics
- Engagement of cam-post at 47° with congruent contact all through the flexion
- Axial freedom femur/insert ± 10°
- Roll back of 9mm
- Jump distance 13 to 19mm
- Posterior de-coaptation of 1mm starting 120° with 2 points of contact (trimaran)
- Compatibility femur:tibia n+1/n/n-1 Intra-condylar cage with low L x H dimensions

Evolutis

www.evolutisfrance.com

Rolflex TONIC

# CONDYLES

| Dimensions Fémorales Rolflex TONIC | | | |
|---|---|---|---|
| Taille/Size | A-P | M-L | A-P/M-L |
| 0 | 47,2 | 52 | 1,10 |
| 1 | 50,3 | 55 | 1,09 |
| 2 | 53 | 58 | 1,09 |
| 3 | 55,8 | 61 | 1,09 |
| 4 | 58,8 | 64 | 1,09 |
| 5 | 61,8 | 67 | 1,08 |
| 6 | 64,8 | 70 | 1,08 |
| 7 | 67,6 | 73 | 1,08 |
| 8 | 70,5 | 76 | 1,08 |
| 9 | 74,5 | 80 | 1,07 |

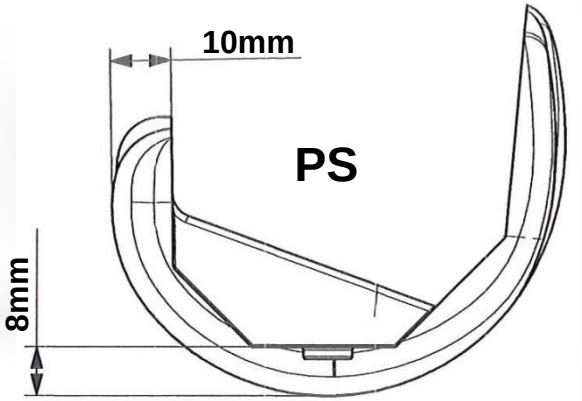


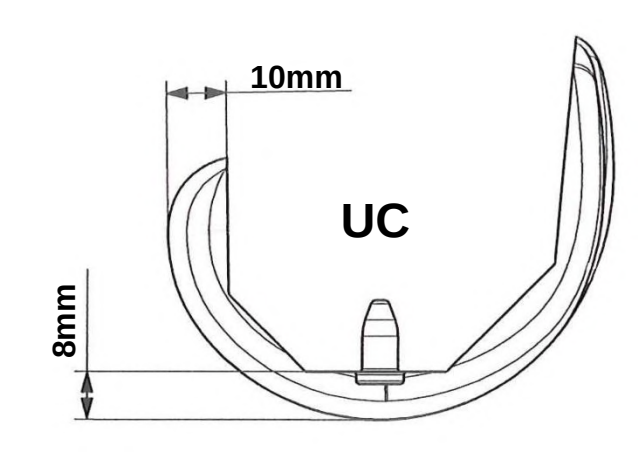

www.evolutisfrance.com

Rolflex TONIC

# BASEPLATES

| Dimensions Tibiales Rolflex TONIC | | | |
|---|---|---|---|
| Taille/Size | A-P | M-L | A-P/M-L |
| 0 | 37,5 | 58 | 1,55 |
| 1 | 40 | 62 | 1,55 |
| 2 | 42 | 65 | 1,55 |
| 3 | 44,5 | 68 | 1,53 |
| 4 | 46,5 | 71 | 1,53 |
| 5 | 49 | 75 | 1,53 |
| 6 | 51 | 77 | 1,51 |
| 7 | 54,5 | 81 | 1,49 |
| 8 | 57,5 | 85 | 1,48 |

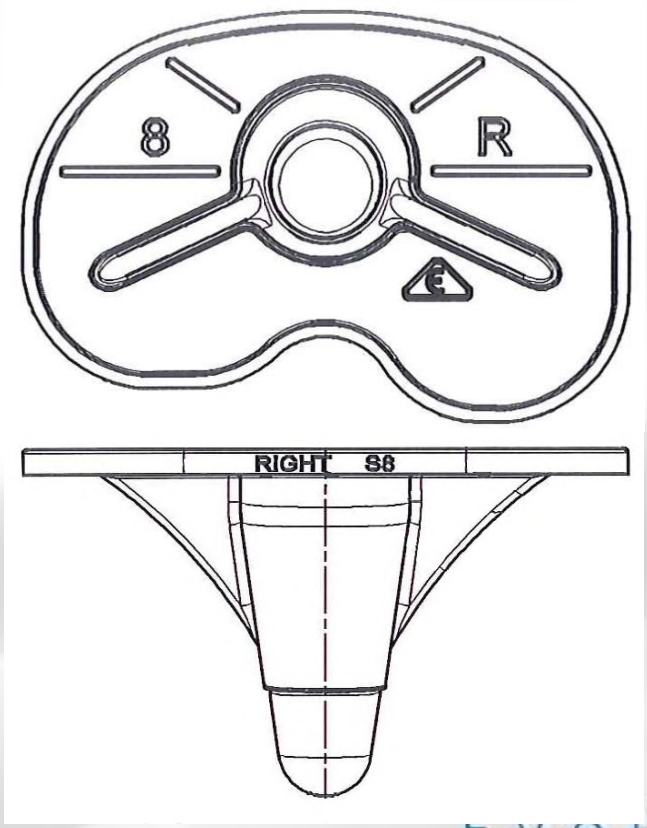


Evolutis

www.evolutisfrance.com

Rolflex TONIC

# BASEPLATES

- Mobile bearing:
  - Symetrical insert on asymetric base plate
  - Free axial rotation
  - cylindro-conical peg Ø14mm h.19mm

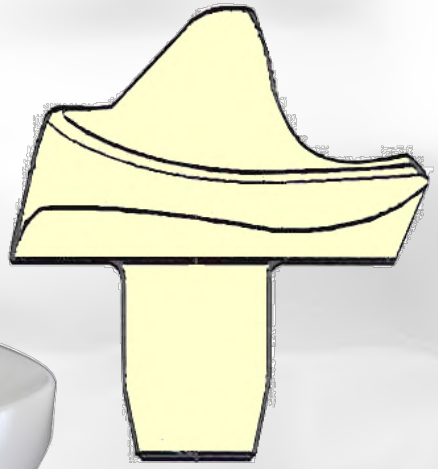

Evolutis

www.evolutisfrance.com

Rolflex TONIC

# BASEPLATES

- Fixed bearing:
  - The symetrical insert is aligned on the anterior border of the baseplate
  - The insert slides anterior to posterior on a dovetail joint
  - Then locks on the anterior crenels

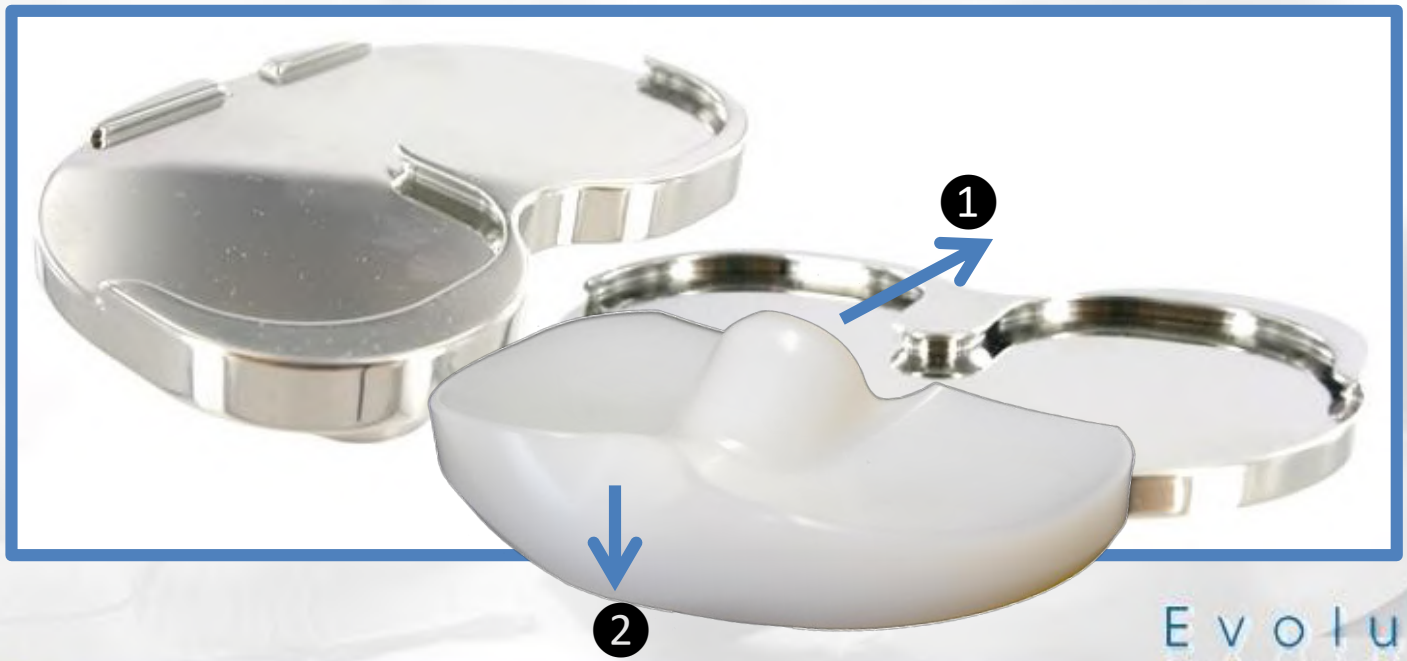


Evolutis

www.evolutisfrance.com

Rolflex TONIC

# COMPATIBILITY FEMUR-INSERT

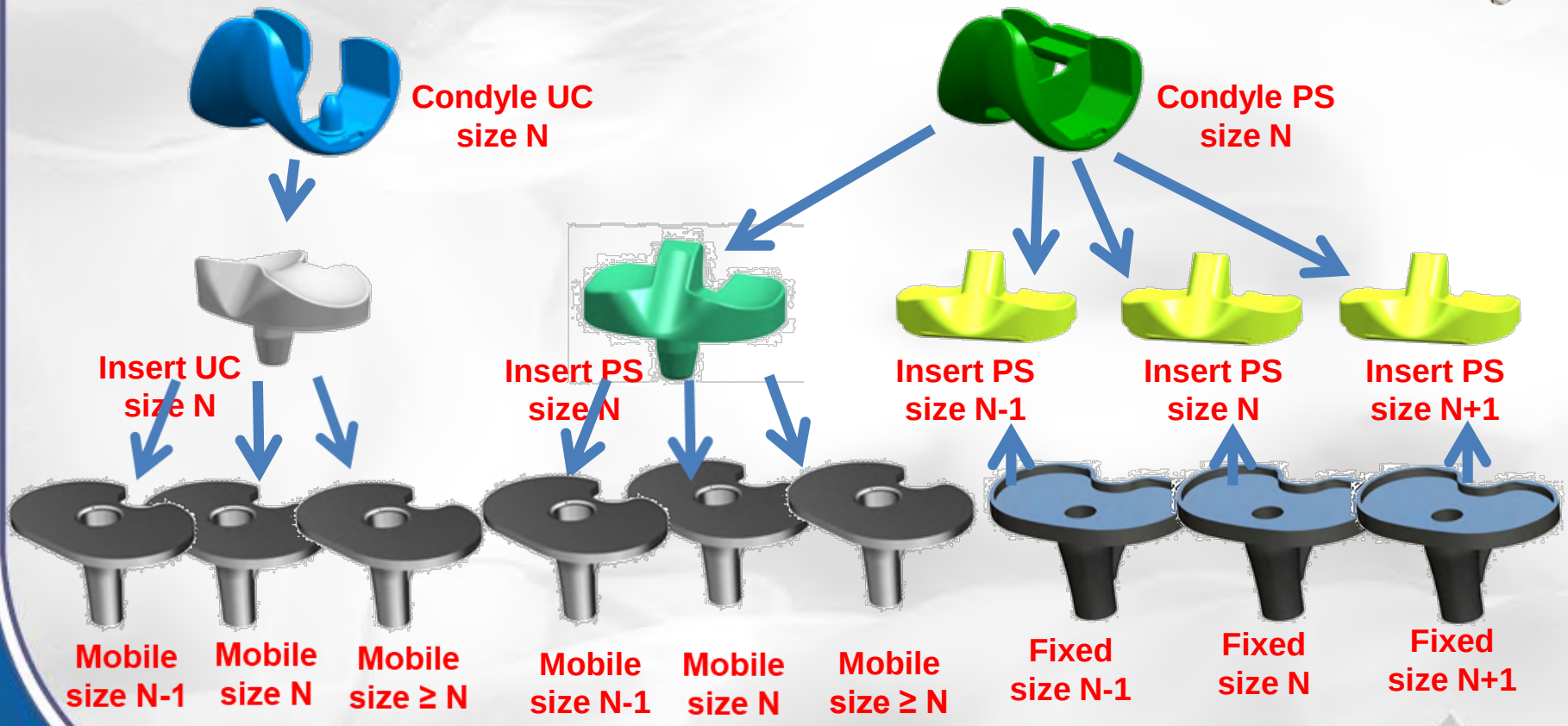


Evolutis

www.evolutisfrance.com

Rolflex TONIC

# HIFLEX

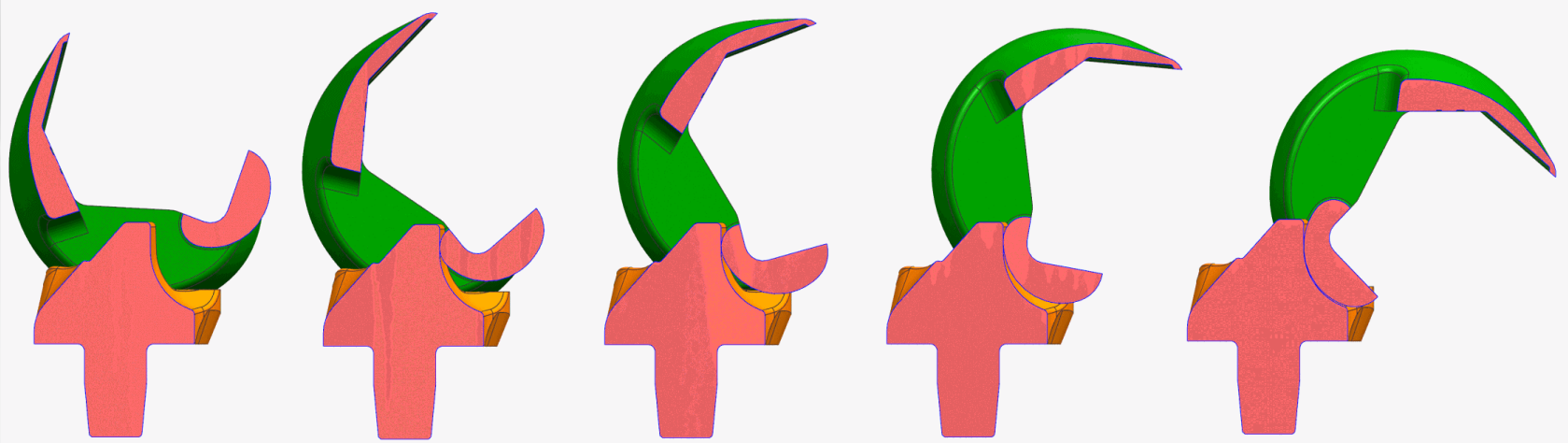

- Engagement of cam at 47° on congruent contact at all degrees of flexion
- Roll back of 9mm at the post-cam point
- Jump distance of 13 to 19mm
- Posterior de-coaptation of 1mm from 120°
- Up to 140° flexion recorded

Evolutis

www.evolutisfrance.com

Rolflex TONIC

**HIFLEX**

## – Design Rationale of the Rolflex TONIC PS

- (1) cam-post mechanism with early engagement forcing a roll-back kinematic as soon as 47° of flexion.
- (2) a highly congruent contact between femoral condyle and tibial insert to insure stability and reduction of contact stresses.
- (3) short tibial post with rounded edges and posterior placement: reduce the potential conflict with the patellar tendon, reduces the post penetration height in the intra-condylar notch, limit the anterior lever moment on the tibial fixation.
- (4) a large condylar cam and longer than both posterior condyles to induce a femoro-tibial de-cooptation at high degrees of flexion.

Evolutis

www.evolutisfrance.com

Rolflex TONIC

# COMPLEMENTS

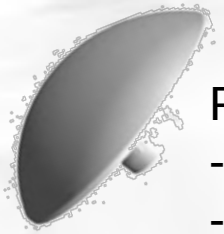

Patellas
- Ø23
- Ø25
- Ø28

Tibial keels Ø13
- l. 40mm
- l. 70mm
- L.110mm

Hemi-Tibial Augments
- Reversible
- S1 to S8
- H 5mm or 10mm

Metal tibial keels l.20mm
- Ø 13mm
- Ø 14mm
- Ø 17mm

Evolutis

www.evolutisfrance.com

Rolflex TONIC

# MATERIALS

- Condyles : CoCr according ISO5832-4 (cemented) or CoCr according ISO5832-4 with Ti macroporous coating (cementless)
- Baseplates: CoCr according ISO5832-4 (cemented) or CoCr according ISO5832-4 with Ti macroporous coating (cementless) and UHMWPE according ISO5834-1 and 2
- Tibial inserts: UHMWPE PEXEL® according ISO5834-1 and 2
- Patellas: UHMWPE PEXEL® according ISO5834-1 and 2
- Tibial keels: CoCr according ISO5832-12
- Augments: CoCr according ISO5832-4

Evolutis

www.evolutisfrance.com

Rolflex TONIC

# CEMENTLESS FIXATION

- Young Kyun Woo et al. [7] sees no radiologic or clinical complication associated with cementless TKA implants, and publishes a **96.8% survival rates for cementless TKA after 15.5 years of implantation**.
- Lass et al. [8] found **less radiolucency around the baseplate in the cementless** group compared to a cemented group.
- Mont et al. [9] in a meta-analysis has evidenced favorable survivorship of **cementless TKA with survivorship of 76% at 20 years versus 71% for their cemented** counterparts.
- Stilling et al. [10] shows superiority in terms of migration of a **75-80% porosity** material (pores size 430µm) over a 50% porosity material (pores size 200-300µm) in cementless fixation of tibial baseplates.

Evolutis

www.evolutisfrance.com

Rolflex TONIC

# TI-GROWTH COATING

- Porosity 50-70%
- Macropores up to 800µm
- Thickness 600µm
- Pure Titanium
- Plasma sprayed (Eurocoating Spa. – It.)

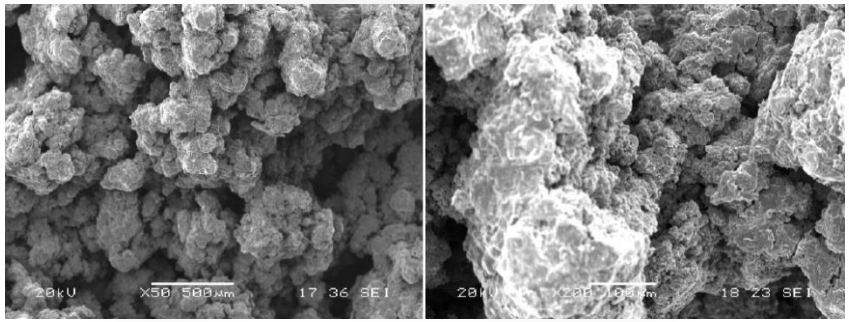

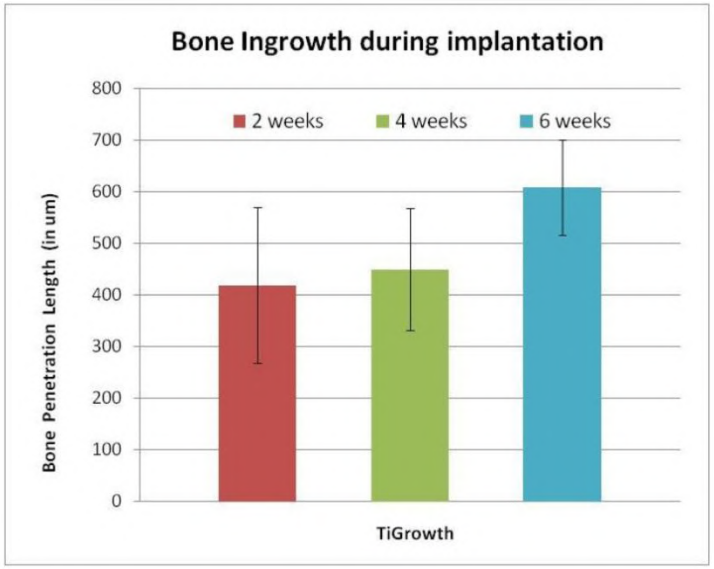

www.evolutisfrance.com

Rolflex TONIC

# INSTRUMENTATION

Options for multiple surgical techniques:

- linked or independants femoro-tibial cuts
- fixed or anatomic external rotation
- intra-medullar or posterior condylar rotation center point
- intramedullar or extramedullar (tibial)
- anterior or posterior reference sizing
- orthogonal or flexum sagittal alignment

Evolutis

www.evolutisfrance.com

Rolflex TONIC

# TIBIAL INSTRUMENTATION

- Tibia first
- 90° extra-medullar alignement
- Posterior slope and varus adjustment
- Millimetric adjustment of cut
- User-friendly

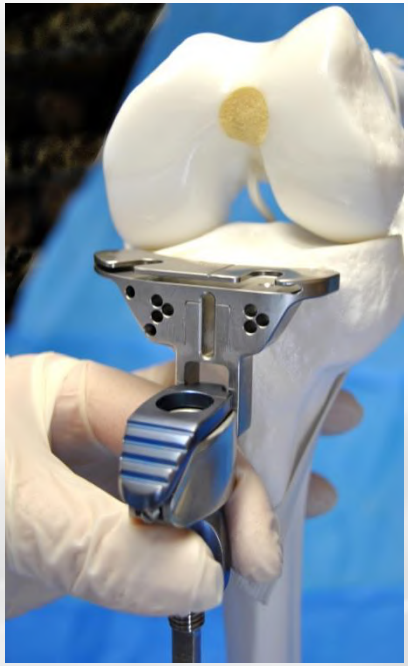

Evolutis

www.evolutisfrance.com

Rolflex TONIC

# TIBIAL INSTRUMENTATION

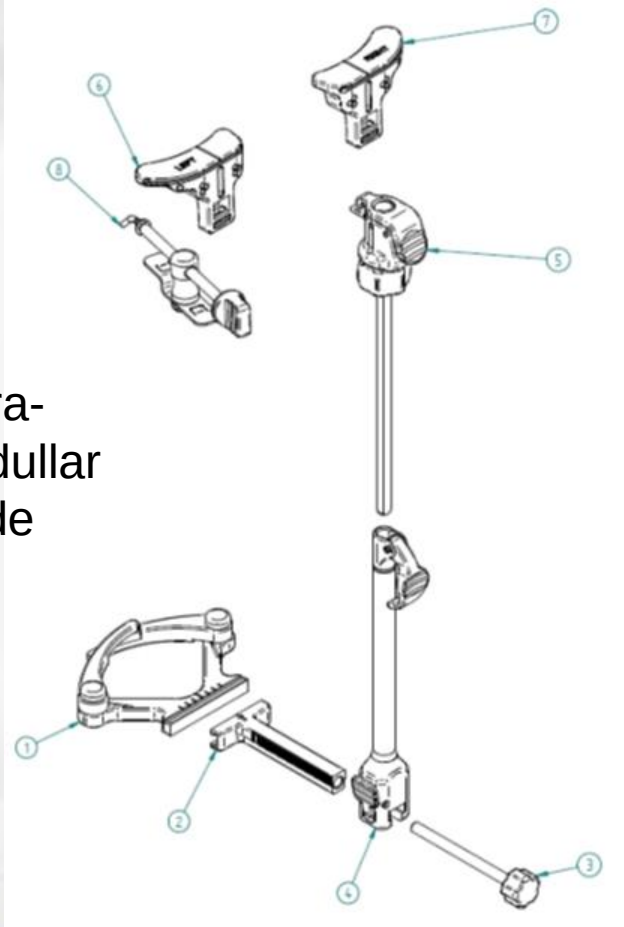

Extra-medullar guide

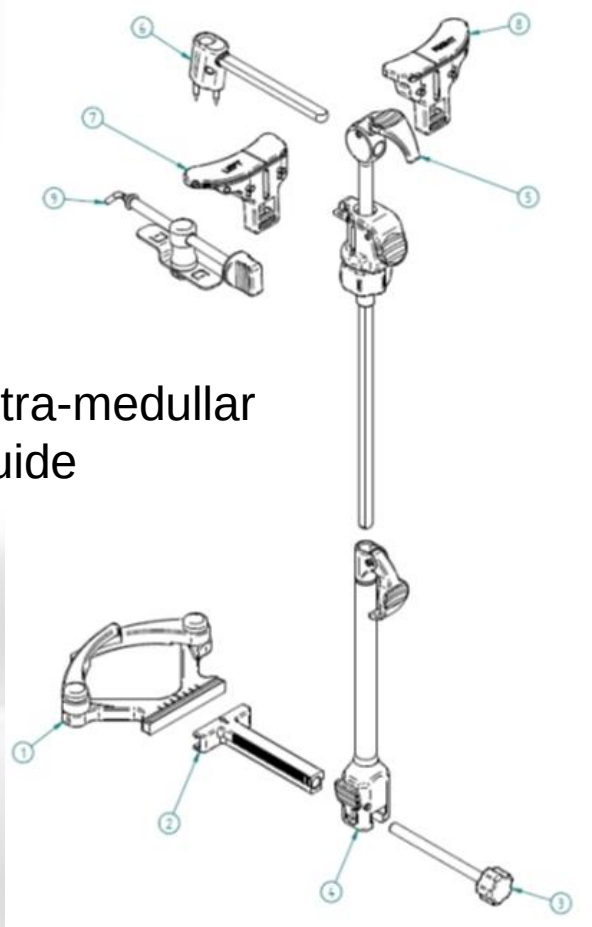

Intra-medullar guide

olutis

www.evolutisfrance.com

Rolflex TONIC

# FEMORAL INSTRUMENTATION

- Possible adjustments:
  - Femoral valgus
  - Orthogonal or flexum cut
  - Anterior or posterior referencing
  - Choice of 2 external rotations
- User-friendly (blue knobs for quick locking/unlocking)
- A/P size evaluation, M/L adaptation M/L, reference to the epicondyles

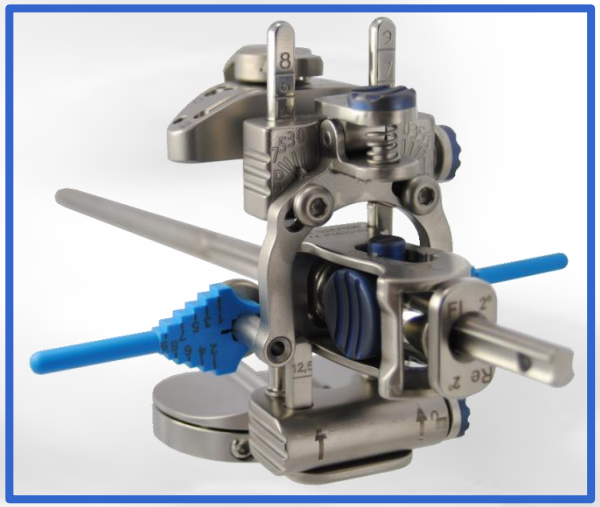

Evolutis

www.evolutisfrance.com

Rolflex TONIC

# FEMORAL INSTRUMENTATION

- Linked (dependant) cuts:
  - Ligamentary balance in extension
  - Adjustable spacer
  - Direct External Rotation
  - Anterior or posterior reference
  - Distal cut
  - Modular spacers to check for extension/flexion correspondance

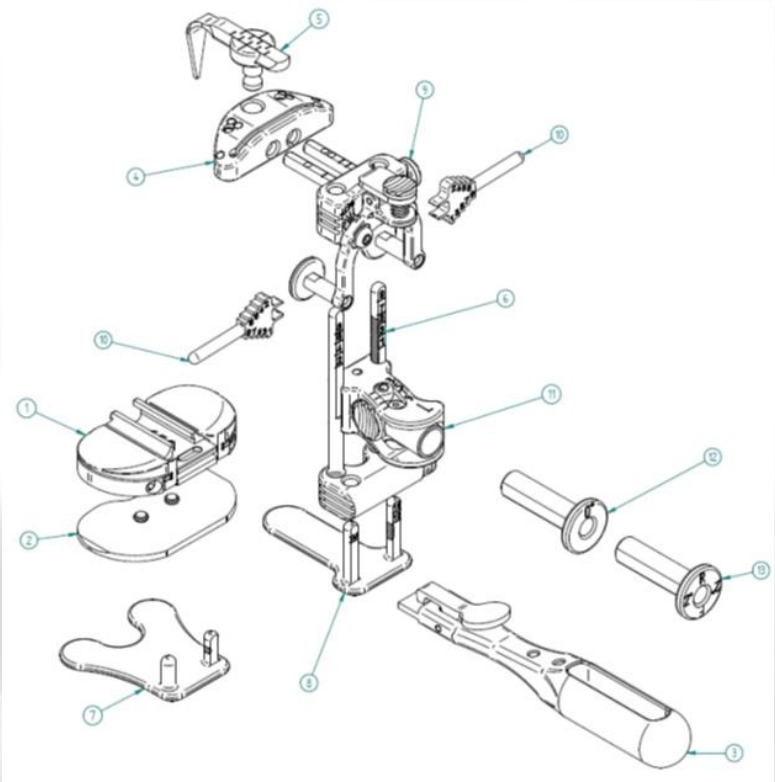

Evolutis

www.evolutisfrance.com

Rolflex TONIC

# FEMORAL INSTRUMENTATION

- 4/1 resection guide
  - Check for long axis
- Trials and intra-condylar notch
  - Trepan
  - PS or UC trial condyles

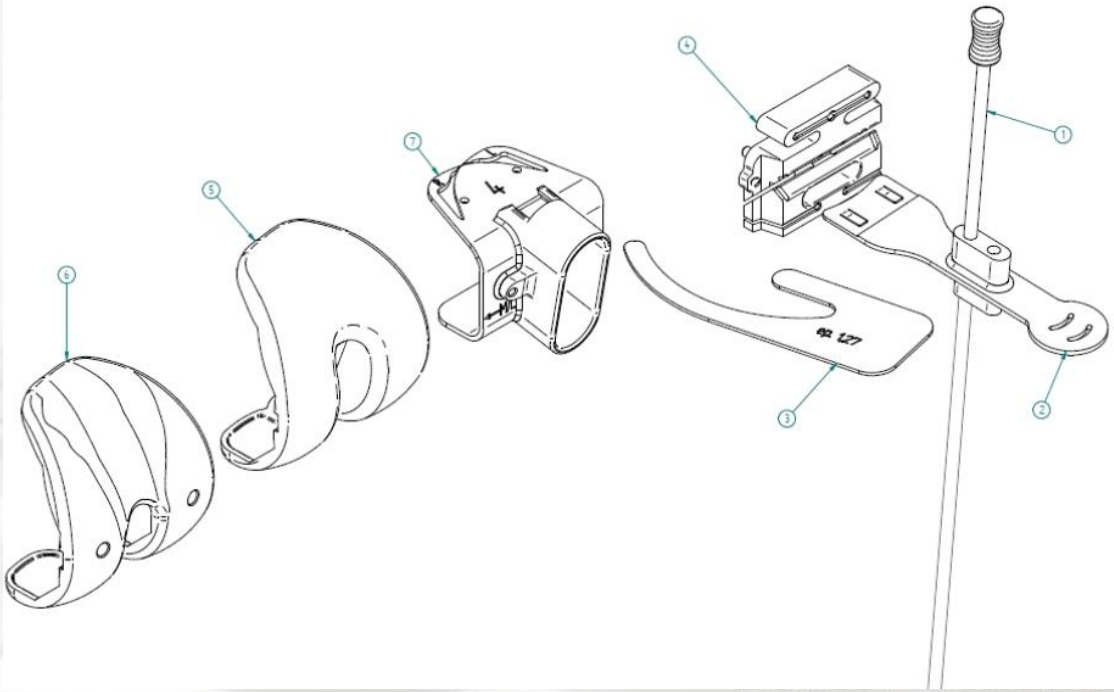

Rolflex TONIC

**INSTRUMENTATION**

Also available:

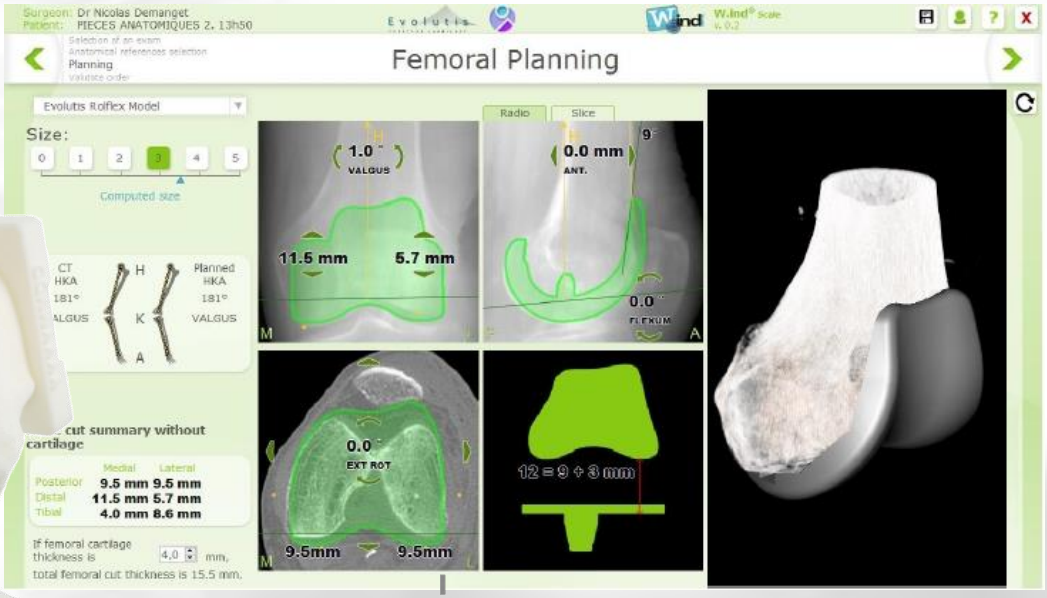

Wind

Patient matched cutting guides

Evolutis

www.evolutisfrance.com

www.evolutisfrance.com

Rolflex TONIC

# SCIENTIFIC GROUP

| | | |
|---|---|---|
| Pr Philippe MASSIN | CHU Paris Nord - Bichat | **PARIS** |
| Dr Jean-Marc DURAND | Clinique Guillaume de Varye | **BOURGES** |
| Dr Patrick VIALE | Clinique Guillaume de Varye | **BOURGES** |
| Dr Philippe MEIRE | Clinique de Châtellerault | **CHATELLERAULT** |
| Dr Jean-Luc COTTE | Polyclinique Sante-Marguerite | **AUXERRE** |
| Dr Dominique HUGUET | Polyclinique de l'atlantique | **NANTES** |
| Dr François-Paul EHKIRCH | Clinique des Maussins | **PARIS** |
| Dr Christophe JARDIN | Clinique Des Ormeaux | **LE HAVRE** |

Evolutis

www.evolutisfrance.com

Evolutis

CREATEUR FABRICANT

# Hactiv®
# Reactiv™

## Surgical Technique

Evolutis
MOTION INSIDE

# HACTIV / CEMTIV HIP SYSTEM

The HACTIV uncemented primary femoral component is a fully HA coated titanium alloy stem, designed for immediate mechanical stability and long term biological fixation *(1)*.

Made in France by the group originally responsible for the manufacture of one of the most clinically successful hip designs internationally, the HACTIV has been widely used throughout Europe with excellent results *(2)*.

The basis of the design is a trapezoidal proximal and mid section to give immediate rotational stability and optimal metaphyseal fit.
The double taper longitudinal geometry with grooves that transfer load proximally ensure that the stem remains locked against the dense bone of the calcar and greater trochanter.

Long term fixation is enhanced through bone ingrowth into the HA coating which is plasma sprayed on to the grit blasted surface of the femoral component *(3)*.

Physiological loading of the calcar region and trabecular ingrowth to the HA coating also prevent the ingress of particulate matter, reducing the potential for osteolysis.

The CEMTIV femoral stem is the cemented version of the HACTIV. Made of High Nitrogen Content Stainless Steel material with a smooth and polished surface, the CEMTIV is available in the same range of sizes and can be implanted with the same instruments.

The HACTIV / CEMTIV Hip System offers stainless steel, cobalt chrome, pure alumina or composite ceramic femoral heads.
HACTIV / CEMTIV Femoral Heads come in 22.2mm, 28mm, 32mm and 36mm and 40mm (ceramic only) sizes.


*1. Vidalain JP. Corail® Stem Long-Term Results Based upon the 15-Years ARTRO Group Experience. Fifteen Years of Clinical Experience with Hydroxyapatite Coatings in Joint Arthroplasty, Ed. Springer, 217-224, 200*
*2. The Norwegian Arthroplasty Register. http://www.haukeland.no/nrl/eng/default.htm*
*3. Frayssinet, P.; Hardy, D.; Hanker, J. and Giammara, B.: Natural History of Bone Response to Hydroxyapatite-Coated Prostheses Implanted in Humans. Cells and Materials, Vol. 5, No. 2, 1995: 125-13*


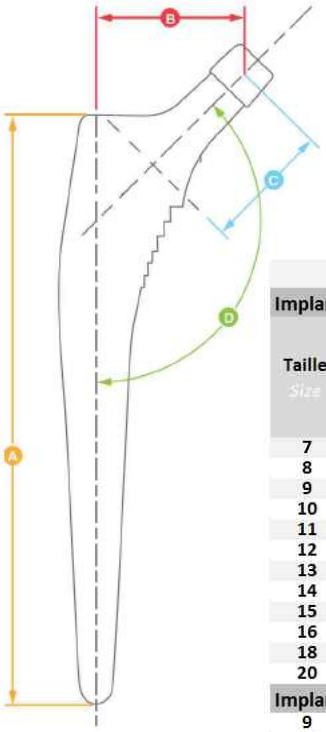


Lot 4

## HACTIV / CEMTIV / REACTIV Dimensions

| | | | | | | | A | | B | C | D |
|---|---|---|---|---|---|---|---|---|---|---|---|
| **Implants 135° STANDARD** *Implants* | | | | | | | | | | | |
| **Taille** *Size* | **Réf** *Cat N°* | | | | | | **Longueur** *Length* | | **Offset Lateral** | **Longueur col** *Neck length* | *NSA* **Angle CCD** |
| | HACTIV HA | HACTIV Coll. HA | CEMTIV | REV Fendue *Slotted* | REV Coll. Fendue *Slotted* | REV Verrouil. *Distal Lock* | Première int. *Primary* | Révision *Revision* | | | |
| 7 | H49 007 (1)(2) | | | | | | 110 | | 36.0 | 38.5 | 135° |
| 8 | H49 008 (1)(2) | | | | | | 115 | | 37.0 | 38.5 | 135° |
| 9 | H49 009 | H49 C009 | H49 S09 | | | | 130 | | 38.0 | 38.5 | 135° |
| 10 | H49 010 | H49 C010 | H49 S10 | | | | 140 | | 39.0 | 38.5 | 135° |
| 11 | H49 011 | H49 C011 | H49 S11 | | | | 145 | | 39.5 | 38.5 | 135° |
| 12 | H49 012 | H49 C012 | H49 S12 | H49 R012 | H49 RC012 | H49 RC112 | 150 | 180 | 40.0 | 38.5 | 135° |
| 13 | H49 013 | H49 C013 | H49 S13 | | | | 155 | | 40.5 | 38.5 | 135° |
| 14 | H49 014 | H49 C014 | H49 S14 | H49 R014 | H49 RC014 | H49 RC114 | 160 | 200 | 41.0 | 38.5 | 135° |
| 15 | H49 015 | H49 C015 | H49 S15 | | | | 165 | | 41.5 | 38.5 | 135° |
| 16 | H49 016 | H49 C016 | H49 S16 | H49 R016 | H49 RC016 | H49 RC116 | 170 | 210 | 42.0 | 38.5 | 135° |
| 18 | H49 018 | H49 C018 | | H49 R018 | H49 RC018 | H49 RC118 | 180 | 220 | 43.0 | 38.5 | 135° |
| 20 | H49 020 | H49 C020 (2) | | H49 R020 | H49 RC020 | H49 RC120 | 190 | 240 | 44.0 | 38.5 | 135° |
| **Implants 128° LATERO-VARUS** *Implants* | | | | | | | | | | | |
| 9 | H49 L009 | H49 LC009 | | | | | 130 | | 45.0 | 42.0 | 128° |
| 10 | H49 L010 | H49 LC010 | | | | | 140 | | 46.0 | 42.0 | 128° |
| 11 | H49 L011 | H49 LC011 | | | | | 145 | | 46.5 | 42.0 | 128° |
| 12 | H49 L012 | H49 LC012 | | | | | 150 | | 47.0 | 42.0 | 128° |
| 13 | H49 L013 | H49 LC013 | | | | | 155 | | 47.5 | 42.0 | 128° |
| 14 | H49 L014 | H49 LC014 | | | | | 160 | | 48.0 | 42.0 | 128° |
| 15 | H49 L015 | H49 LC015 | | | | | 165 | | 48.5 | 42.0 | 128° |
| 16 | H49 L016 | H49 LC016 | | | | | 170 | | 49.0 | 42.0 | 128° |
| 18 | H49 L018 | H49 LC018 | | | | | 180 | | 50.0 | 42.0 | 128° |
| 20 | H49 L020 (2) | H49 LC020 (2) | | | | | 190 | | 51.0 | 42.0 | 128° |

*(1) not validated for patients exceeding 75kgs*
*(2) implants available only on special request*

# REFERENCES

## Implants HACTIV® / REACTIV® *Implants*

| | Standard 135° première intention *Primary Standard 135°* | | | Latero-varus 128° première intention *Primary Latero-varus 128°* | | Standard 135° Révision Revision Standard 135° | | | |
|---|---|---|---|---|---|---|---|---|---|
| | HAP | à colerette Collared HAP | Cimenté *Cemented* | HAP | à colerette *Collared* HAP | Fendue *Slotted* | Fendue à colerette *Slotted Collared* | Verrouillage Distal *Distal Locking* | A Colerette Cimenté *Collared Cemented* |
| Taille / *Size* 7 | H49 007 (1)(2) | NA | NA | NA | NA | NA | NA | NA | NA |
| Taille / *Size* 8 | H49 008 (1)(2) | NA | NA | NA | NA | NA | NA | NA | NA |
| Taille / *Size* 9 | H49 009 | H49 C09 | H49 S09 | H49 L009 | H49 LC09 | NA | NA | NA | NA |
| Taille / *Size* 10 | H49 010 | H49 C10 | H49 S10 | H49 L010 | H49 LC10 | NA | NA | NA | NA |
| Taille / *Size* 11 | H49 011 | H49 C11 | H49 S11 | H49 L011 | H49 LC11 | NA | NA | NA | NA |
| Taille / *Size* 12 | H49 012 | H49 C12 | H49 S12 | H49 L012 | H49 LC12 | H49 R012 | H49 RC012 | H49 RC112 | H49 SRC012 |
| Taille / *Size* 13 | H49 013 | H49 C13 | H49 S13 | H49 L013 | H49 LC13 | NA | NA | NA | NA |
| Taille / *Size* 14 | H49 014 | H49 C14 | H49 S14 | H49 L014 | H49 LC14 | H49 R014 | H49 RC014 | H49 RC114 | H49 SRC014 |
| Taille / *Size* 15 | H49 015 | H49 C15 | H49 S15 | H49 L015 | H49 LC15 | NA | NA | NA | NA |
| Taille / *Size* 16 | H49 016 | H49 C16 | H49 S16 | H49 L016 | H49 LC16 | H49 R016 | H49 RC016 | H49 RC116 | H49 SRC016 |
| Taille / *Size* 18 | H49 018 | H49 C18 | NA | H49 L018 | H49 LC18 | H49 R018 | H49 RC018 | H49 RC118 | H49 SRC018 |
| Taille / *Size* 20 | H49 020 | H49 C20 (1) | NA | H49 L020 (1) | H49 LC20 (1) | H49 R020 | H49 RC020 | H49 RC120 | H49 SRC020 |

(1) limite de poids patient à 75kgs / *not validated for patients exceeding 75kgs*
(2) implants disponibles sur demande spéciale / *implants available only on special request*

*Femoral broaches: choice of machined bone-compactor structure (picture) or embossed spiked structure.*

## Têtes Fémorales *Femoral Heads*

| Matériau / *Matériau* | Taille *Size* | Réf. *Cat N°* |
|---|---|---|
| Inox M30NW / *Stainless Steel* | Ø28 -3.5mm | H11 1280 |
| Inox M30NW / *Stainless Steel* | Ø28 +0mm | H11 1281 |
| Inox M30NW / *Stainless Steel* | Ø28 +3.5mm | H11 1282 |
| Inox M30NW / *Stainless Steel* | Ø28 +7mm | H11 1283 |
| Chrome-Cobalt / *Cobalt-Chromium* (1) | Ø28 -7mm | H10 1279 |
| Chrome-Cobalt / *Cobalt-Chromium* | Ø28 -3.5mm | H10 1280 |
| Chrome-Cobalt / *Cobalt-Chromium* | Ø28 +0mm | H10 1281 |
| Chrome-Cobalt / *Cobalt-Chromium* | Ø28 +3.5mm | H10 1282 |
| Chrome-Cobalt / *Cobalt-Chromium* | Ø28 +7mm | H10 1283 |
| Chrome-Cobalt / *Cobalt-Chromium* (1)(3) | Ø28 +10.5mm | H10 1284 |
| Chrome-Cobalt / *Cobalt-Chromium* | Ø32 -4mm | H10 1320 |
| Chrome-Cobalt / *Cobalt-Chromium* | Ø32 +0mm | H10 1321 |
| Chrome-Cobalt / *Cobalt-Chromium* | Ø32 +4mm | H10 1322 |
| Chrome-Cobalt / *Cobalt-Chromium* | Ø32 +8mm | H10 1323 |

| Matériau / *Matériau* | Taille *Size* | Réf. *Cat N°* |
|---|---|---|
| Alumine / *Alumina* | Ø28 -3.5mm | H14 1280 |
| Alumine / *Alumina* | Ø28 +0mm | H14 1281 |
| Alumine / *Alumina* | Ø28 +3.5mm | H14 1282 |
| Céram. Composite / *Composite Ceram.* | Ø32 -4mm | H14 C1320 |
| Céram. Composite / *Composite Ceram.* | Ø32 +0mm | H14 C1321 |
| Céram. Composite / *Composite Ceram.* | Ø32 +4mm | H14 C1322 |
| Céram. Composite / *Composite Ceram.* | Ø32 +8mm | H14 C1323 |
| Céram. Composite / *Composite Ceram.* | Ø36 -4mm | H14 C1360 |
| Céram. Composite / *Composite Ceram.* | Ø36 +0mm | H14 C1361 |
| Céram. Composite / *Composite Ceram.* | Ø36 +4mm | H14 C1362 |
| Céram. Composite / *Composite Ceram.* | Ø36 +8mm | H14 C1363 |

*From top : postero-lateral, anterior approach, and lateral offset broach handle.*

## Instrumentation HACTIV® *Instrument Set* H50 9100

| Description | Nbre. *Numb.* Articles | Réf. *Cat N°* |
|---|---|---|
| Plateau avec couvercle / *Tray with Lid* | 1 | H50 9000 |
| Manche porte-râpe / *Broach handle* | 2 | H01 009 |
| Ciseau évideur / *Box chisel* | 1 | H01 013 |
| Chemise bt conique / *Conical tip sleeve* | 1 | H01 021 |
| Impacteur à bout sphérique | 1 | H01 023 |
| Masse coulissante / *Slap hammer* | 1 | H01 033 |
| Embout pousse-tête / *Head pusher tip* | 1 | H02 001 |
| Tête d'essai Ø28 -3.5mm *Trial Head* | 1 | H02 2280 |
| Tête d'essai Ø28 +0mm *Trial Head* | 1 | H02 2281 |
| Tête d'essai Ø28 +3.5mm *Trial Head* | 1 | H02 2282 |
| Tête d'essai Ø28 +7mm *Trial Head* | 1 | H02 2283 |
| Tête d'essai Ø32 -4mm *Trial Head* | 1 | H02 2320 |
| Tête d'essai Ø32 +0mm *Trial Head* | 1 | H02 2321 |
| Tête d'essai Ø32 +4mm *Trial Head* | 1 | H02 2322 |
| Impacteur de tige / *Stem impactor* | 1 | H38 022 |
| Col d'essai 135° standard *Trial Neck* | 1 | H50 003 |
| Col d'essai 128° latero-varus *Trial Neck* | 1 | H50 005 |

| Description | Nbre. *Numb.* Articles | Réf. *Cat N°* |
|---|---|---|
| Râpe Taille 9 / *Broach size 9* | 1 | H50 009 |
| Râpe Taille 10 / *Broach size 10* | 1 | H50 010 |
| Râpe Taille 11 / *Broach size 11* | 1 | H50 011 |
| Râpe Taille 12 / *Broach size 12* | 1 | H50 012 |
| Râpe Taille 13 / *Broach size 13* | 1 | H50 013 |
| Râpe Taille 14 / *Broach size 14* | 1 | H50 014 |
| Râpe Taille 15 / *Broach size 15* | 1 | H50 015 |
| Râpe Taille 16 / *Broach size 16* | 1 | H50 016 |
| Râpe Taille 18 / *Broach size 18* | 1 | H50 018 |
| Râpe Taille 20 / *Broach size 20* | 1 | H50 020 |

| Options | Nbre. *Numb.* Articles | *Numb.* Articles |
|---|---|---|
| *Anterior approach broach handle* | 2 | H01 027 |
| *Right Offset broach handle* | 1 | H01 048 |
| *Left Offset broach handle* | 1 | H01 049 |
| *Head pusher tip for Ø36 & 40mm* | 1 | H36 002 |

***Materials:***
*Coated HACTIV® and REACTIV™ stems : titanium alloy TA6V according ISO 5832-3 + Calcium Hydroxyapatite*
*Cemented CEMTIV® stems : high nitrogen content stainless steel according ISO 5832-9*
*Femoral heads : high nitrogen content stainless steel according ISO 5832-9 or cobalt-chromium alloy according ISO 5832-4 or pure alumina ceramic according ISO 6474-1 or ceramic composite according ISO 6474-2*
Locking screws: *titanium alloy TA6V according ISO 5832-3*
*Vacuum packed. Gamma ray sterilised.*


CE 0086 Evolutis
Avenue de la Libération, 42720 Briennon, France
Tel : +33. (0)477.60.79.99 – Fax : +33. (0)477.60.79.90


Designed and Manufactured in France

www.evolutisfrance.com


Avr 2017 / Réf.: EN_HACTIV STC H50 (H50 451)

www.evolutisfrance.com

Evolutis

CREATEUR FABRICANT

Product Sheet

# DM Cemented & Cross-shell

Fiche Produit

*Dual Mobility Cemented acetabular Cup and Protrusio cross-shell*

Cupule acétabulaire à double mobilité à Cimenter et Croix de reconstruction

Evolutis MOTION INSIDE

HIP

# Evolutis

CREATEUR FABRICANT

## CAPTIV

press fit dual mobility cup

## POLYETHYLENE

Crosslinked Polyethylene

## CAPITOLE

Cemented dual mobility cup

10 years clinical use

**CAPTIV DM®**
**CAPITOLE®**

**DUAL MOBILITY: A GUARANTEE OF STABILITY**

www.evolutisfrance.com

**CAPTIV DM** :
Dual Mobility ensures a high degree of articular stability and large range of motion. Primary stability is ensured by an excellent peripheral press fit.

**CAPTIV specifications** :
• The cups are made from nitrogen enriched M30 stainless steel : this steel is 40% more resistant than 316L and much less prone to corrosion. It avoids the risk of galvanic corrosion with titanium coating.
• The cup is entirely coated with a layer of 150 microns of porous titanium with a second coating of 100 microns of osteoconductive hydroxyapatite
• Peripheral pressfit is proportional to size with an average of 1mm.
• The pole is congruent with bone reamed, it is recommended to use the same size cup as the reamer ensuring the press fit.

**CAPITOLE** :
A complete range of Dual Mobility cups :
press-fit and cemented Dual Mobility ensures a high degree of articular stability and large ranges of motion.

**CAPITOLE specifications** :
The cemented CAPITOLE C cup has a mobile insert for enhanced stability in different indications.
• Stainless steel cup, mirror polished inside and on the outside.
• Reaming and cup size are size for size.
• The cup has incorporated spacers which guarantee a regular cement mantle according to Charnley principles.
The peripheral rim is flanged which ensures correct centring of the cup and cement pressurisation. The cement escapes via 3 vents.
Cement mantle and pressurisation is therefore of good quality.

**MOBILE INSERT** :

• The chamfered mobile insert is strongly retentive in order to prevent the head from dislocating.

Test CRITT (Independent Laboratory) :105,5daN pull out (1 daN equivalent to 1Kg).

•The polyethylene sphere behaves like a big head of at least 40 mm which ensures a large range of motion and stability which has been shown to be above 99,8%.

• Internal diameter for different heads. :

*Polyethylene for Ø28 mm heads.

• The range of sizes extends from Ø46mm to Ø62 mm (Ø47mm to Ø61mm Cemented). Polyethylene wear of the retentive collar is reduced by the self centring anti capsizing insert which automatically realigns itself in the axis of constraints.

## PEXEL® Polyethylene, "moderately crosslinked"

Ultra high molecular weight polyethylene (over 7 million), only made by extrusion.
Cross linkage is obtained by using a moderate level of irradiation of about 40 kGy under vacuum.
Vac U Pac packaging is done under vacuum in a foil pouch free of oxygen,
(seal validation undertaken by the Laboratoire National d'Essai (LNE))
Wear test undertaken by CERAH laboratory on a CAPITOLE T cup with an aged polyethylene:

- After 5 000 000 de cycles, the amount of mass lost was 131,7 mg, which corresponds to a penetration rate of 0,05 mm/year ; ie 5 times less than with standard polyethylene.

- The graph represents mass lost during walking cycles, getting up from a chair and stairs.

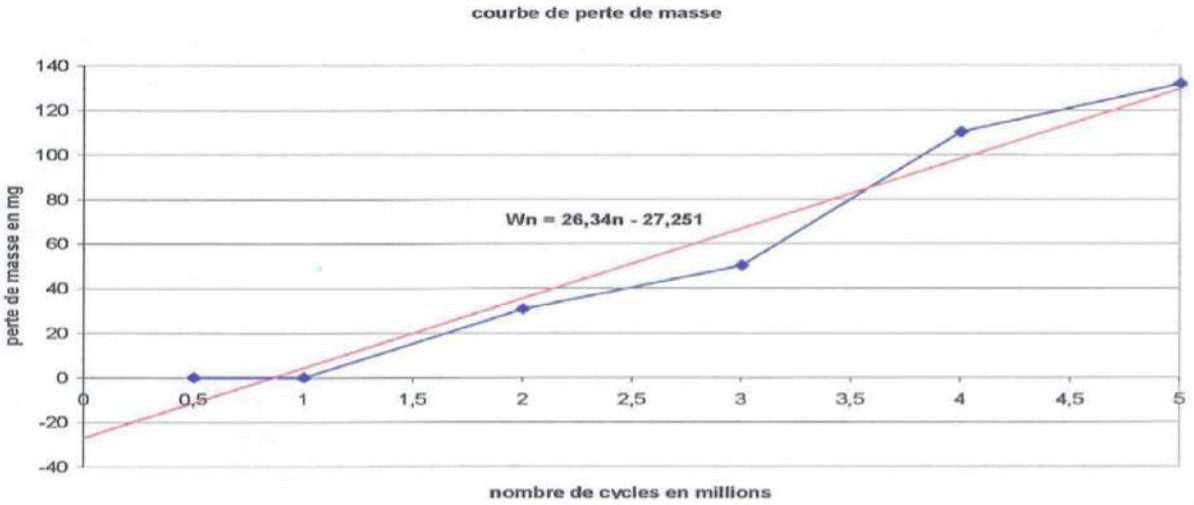

# References

LOt 4, Lot 15

## CAPITOLE C dual mobility Cemented cup
*Cupule à Cimenter à double mobilité CAPITOLE C*

| Shell ø *Cupule* | CAPITOLE C | ø22.2 PE Liner / *Insert* | ø 28 PE Liner / *Insert* |
|---|---|---|---|
| ø45 | H51 C045 | H51 M2245 | - |
| ø47 | H51 C047 | H51 M2247 | H51 M2847 |
| ø49 | H51 C049 | H51 M2249 | H51 M2849 |
| ø51 | H51 C051 | H51 M2251 | H51 M2851 |
| ø53 | H51 C053 | H51 M2253 | H51 M2853 |
| ø55 | H51 C055 | H51 M2255 | H51 M2855 |
| ø57 | H51 C057 | H51 M2257 | H51 M2857 |
| ø59 | H51 C059 | H51 M2259 | H51 M2859 |
| ø61 | H51 C061 | H51 M2261 | H51 M2861 |

## Protrusio Cross-shell
*Croix de reconstruction*

| Size / Taille | For cemented cup ø *Pour cupule ø* | Inner ø *Interne* | Outer ø *Externe* | Cat N° |
|---|---|---|---|---|
| ø46 | ≤45 | 46 | 50 | H13 046 |
| ø50 | 46 - 49 | 50 | 54 | H13 050 |
| ø54 | 50 - 53 | 54 | 58 | H13 054 |
| ø58 | 54 - 57 | 58 | 62 | H13 058 |
| ø62 | 58 - 61 | 62 | 66 | H13 062 |

## Screws
*Vis*

| Description | ø (mm) | L. (mm) | Cat N° |
|---|---|---|---|
| Cortical screw / *Vis corticale* | 5 | 35 | H16 S5035 |
| Cortical screw / *Vis corticale* | 5 | 40 | H16 S5040 |
| Cortical screw / *Vis corticale* | 5 | 45 | H16 S5045 |
| Cortical screw / *Vis corticale* | 5 | 50 | H16 S5050 |
| Cortical screw / *Vis corticale* | 5 | 55 | H16 S5055 |
| Cortical screw / *Vis corticale* | 5 | 60 | H16 S5060 |

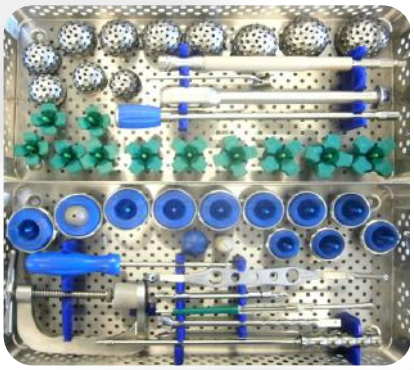

Instrumentation CAPITOLE Straight Handle
*Manche Droit*
**H52 9100**

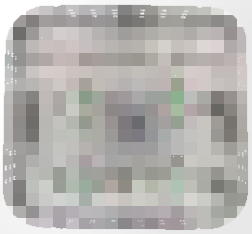

Instrumentation Cross-shell
*Croix de reconstruction*
**H03 9102**

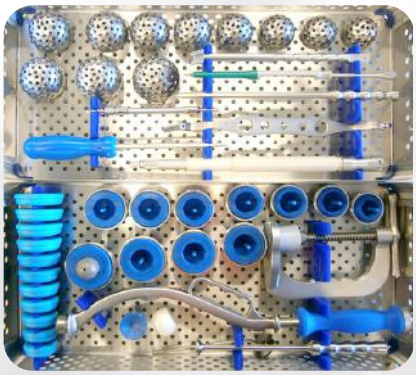

Instrumentation CAPITOLE Curved Handle
*Manche Courbe*
**H52 9101**

Evolutis MOTION INSIDE

**Mentions légales :**
Les implants acétabulaires CAPITOLE sont des dispositifs médicaux implantables de classe III indiqués pour les arthroplasties primaires totales (PTH) ou en révision (PTHR) de la hanche selon la version.
Les Croix de reconstruction sont des dispositifs médicaux implantables de classe IIb indiqués pour les révisions d'arthroplasties (PTHR) de la hanche.
Les implants CAPITOLE et Croix de reconstruction sont pris en charge par l'assurance maladie. Informations sur www.ameli.fr.
Le chirurgien est expressément invité à prendre connaissance des instructions mentionnées sur la notice d'utilisation incluse dans le conditionnement du DMI, ainsi que celles portées sur le manuel de technique opératoire délivré à la mise en place du produit ou disponible en téléchargement sur le site www.evolutisfrance.com.

***Materials* / Matériaux :**
*Cups: Stainless steel according ISO 5832-1*
*Liners: UHMWPE according ISO 5834-1 & 2*
*Cross-shell: Stainless steel according ISO 5832-1 with spacers in UHMWPE according ISO 5834-1 & 2*
*Screws: Stainless steel according ISO 5832-1*
*Packaging: Sterilized under Gamma irradiation, VacUpac packaging*
Cupules : Acier inoxydable selon ISO 5832-1
Inserts : UHMWPE selon ISO 5834-1 et 2
Croix de reconstruction : Acier inoxydable selon ISO 5832-1 et spacers en UHMWPE selon ISO 5834-1 & 2
Vis : Acier inoxydable selon ISO 5832-1
Conditionnement : Stérilisé sous rayonnement Gamma, conditionnement VacUpac

CE 2797
Evolutis
10 Place des Tuiliers, 42720 Briennon, France
Tel : +33. (0)477.60.79.99 – Fax : +33. (0)477.60.79.90
www.evolutisfrance.com

Designed and Manufactured in France

Jun 2019 / Ref: BI_DM Cemented FP H52 *(H52 432)*

# 12/14 FEMORAL HEADS

## Stainless Steel, Cobalt-Chrome , Ceramic

### Stainless steel ISO5832-9 standard

Lot1, Lot 4

| | |
|---|---|
| H11 1220 | Stainless steel Ø 22.2 mm short -2 |
| H11 1221 | Stainless steel Ø 22.2 mm medium 0 |
| H11 1222 | Stainless steel Ø 22.2 mm long +2 |
| H11 1279 | Stainless steel Ø 28 mm extra short -7* |
| H11 1280 | Stainless steel Ø 28 mm short -3.5 |
| H11 1281 | Stainless steel Ø 28 mm medium 0 |
| H11 1282 | Stainless steel Ø 28 mm long +3.5 |
| H11 1283 | Stainless steel Ø 28 mm extra long +7 |
| H11 1320 | Stainless steel Ø 32 mm short -4 |
| H11 1321 | Stainless steel Ø 32 mm medium 0 |
| H11 1322 | Stainless steel Ø 32 mm long +4 |
| H11 1323 | Stainless steel Ø 32 mm extra long +8 |

### Composite Alumina ISO 6474 standard

| | |
|---|---|
| H14 C1280 | Alumina Composite Ø 28 mm short -3.5** |
| H14 C1361 | Alumina Composite Ø 28 mm med 0** |
| H14 C1362 | Alumina Composite Ø 28 mm long +3.5** |
| H14 C1320 | Alumina Composite Ø 32 mm short -3.5 |
| H14 C1321 | Alumina Composite Ø 32 mm medium 0 |
| H14 C1322 | Alumina Composite Ø 32 mm long +3.5 |
| H14 C1323 | Alumina Composite Ø 32 mm long +8** |
| H14 C1360 | Alumina Composite Ø 36 mm short -4 |
| H14 C1361 | Alumina Composite Ø 36 mm med 0 |
| H14 C1362 | Alumina Composite Ø 36 mm long +4 |
| H14 C1363 | Alumina Composite Ø 36 mm extra long +8** |
| H14 C1400 | Alumina Composite Ø 40 mm short -4 |
| H14 C1401 | Alumina Composite Ø 40 mm med 0 |
| H14 C1402 | Alumina Composite Ø 40 mm long +4 |
| H14 C1403 | Alumina Composite Ø 40 mm long +8** |

### Cobalt-Chrome ISO5832-12 standard

Lot 3, Lot 15, Lot 18

| | |
|---|---|
| H10 1220 | Cobalt Chrome Ø 22.2 mm short -2 |
| H10 1221 | Cobalt Chrome Ø 22.2 mm medium 0 |
| H10 1222 | Cobalt Chrome Ø 22.2 mm long +2 |
| H10 1279 | Cobalt Chrome Ø 28 mm extra short -7* |
| H10 1280 | Cobalt Chrome Ø 28 mm short -3.5 |
| H10 1281 | Cobalt Chrome Ø 28 mm medium 0 |
| H10 1282 | Cobalt Chrome Ø 28 mm long +3.5 |
| H10 1283 | Cobalt Chrome Ø 28 mm extra long +7 |
| H10 1320 | Cobalt Chrome Ø 32 mm short -4 |
| H10 1321 | Cobalt Chrome Ø 32 mm medium 0 |
| H10 1322 | Cobalt Chrome Ø 32 mm long +4 |
| H10 1323 | Cobalt Chrome Ø 32 mm extra long +8 |
| H10 1360 | Cobalt Chrome Ø 36 mm short -4 |
| H10 1361 | Cobalt Chrome Ø 36 mm medium 0 |
| H10 1362 | Cobalt Chrome Ø 36 mm long +4 |
| H10 1363 | Cobalt Chrome Ø 36 mm extra long +8 |

### Alumina ISO 6474 standard

| | |
|---|---|
| H14 1280 | Alumina Ceramic Ø 28 mm short -3.5 |
| H14 1281 | Alumina Ceramic Ø 28 mm medium 0 |
| H14 1282 | Alumina Ceramic Ø 28 mm long +3.5 |
| H14 1320 | Alumina Ceramic Ø 32 mm short -4 |
| H14 1321 | Alumina Ceramic Ø 32 mm medium 0 |
| H14 1322 | Alumina Ceramic Ø 32 mm long +4 |
| H14 1360 | Alumina Ceramic Ø 36 mm short -4 |
| H14 1361 | Alumina Ceramic Ø 36 mm medium 0 |
| H14 1362 A | lumina Ceramic Ø 36 mm long +4 |

*** On request for stems sizes 6-7-8.** **** On request only**