Atlas Copco
Oil-injected compressors

Digitally signed by Grabazei Alexandru
Date: 2026.01.22 15:21:00 EET
Reason: MoldSign Signature
Location: Moldova
MOLDOVA EUROPEANĂ

GA 75L VSD+, GA 90 VSD+, GA 110 VSD+

Parts List

Atlas Copco
Oil-injected compressors

GA 75L VSD+, GA 90 VSD+, GA 110 VSD+

Parts List

From following serial number onwards: API 231 035

Copyright, Atlas Copco Airpower n.v., Antwerp, Belgium.
Any unauthorized use or copying of the contents or any part thereof is prohibited. This applies in particular to trademarks, model denominations, part numbers and drawings.

Use only authorized parts. Any damage or malfunction caused by the use of unauthorized parts is not covered by Warranty or Product Liability.

13/02/2020
No. 2930 7150 43
www.atlascopco.com

Instructions 6
1 Service Kits 20
2 Oil 24
3 Drive arrangement 26
4 Lubrication Air-cooled 30
5 Lubrication Water-cooled 32
6 Air system 34
6.1 Air inlet 34
6.2 Regulation valve 36
6.3 Air filter 38
6.4 Air receiver AS1210, CE, MOM - RIF Oil, MHLW - RXD Oil 40
6.5 Air receiver ASME - RXD Oil (02/02/2017 - 16/01/2020) 96
6.6 Air receiver ASME - RXD Oil (17/01/2020 - ...) 118
6.7 Air receiver ASME - RIF Oil 126
7 Cooling system 130
7.1 Air-cooled 130
7.2 Water-cooled Pack 132
7.3 Water-cooled Full-Feature 134
8 Hoses & Nipples Air-cooled - Pack - 380V-460V/60Hz, 400V/50Hz (02/03/2017 - 05/12/2017) 136
9 Hoses & Nipples Air-cooled - Pack - 380V-460V/60Hz, 400V/50Hz (06/12/2017 - ...) 138
10 Hoses & Nipples Air-cooled - Pack Trafo - (200V-230V-575V/60Hz, 200V-500V/50Hz) (20/07/2017 - 05/12/2017) 142
11 Hoses & Nipples Air-cooled - Pack Trafo - (200V-230V-575V/60Hz, 200V-500V/50Hz) (06/12/2017 - ...) 144
12 Hoses & Nipples Air-cooled - Full-Feature (02/03/2017 - 05/12/2017) 148
13 Hoses & Nipples Air-cooled - Full-Feature (06/12/2017 - ...) 152
14 Hoses & Nipples Water-cooled - Pack 156
15 Hoses & Nipples Water-cooled - Full-Feature 160
16 Drain system 166
16.1 GA 75L VSD+ - Pack Air-cooled 166
16.2 GA 75L VSD+ - Pack Water-cooled 168
16.3 GA 90 VSD+, GA 110 VSD+ - Pack Air-cooled 170
16.4 GA 90 VSD+, GA 110 VSD+ - Pack Water-cooled 174
16.5 GA 75L VSD+ - Full-Feature Air-cooled 176
16.6 GA 75L VSD+ - Full-Feature Water-cooled 180
16.7 GA 90 VSD+, GA 110 VSD+ - Full-Feature Air-cooled 182
16.8 GA 90 VSD+, GA 110 VSD+ - Full-Feature Water-cooled 186
17 Loose parts Pack 188
18 Loose parts Full-Feature 190
19 Loose parts - Cable gland 192

20 Air dryer.....194
20.1 Assembly GA 75L VSD+ - ID 255.....194
20.2 Assembly GA 90 VSD+ - ID 286.....196
20.3 Assembly GA 110 VSD+ - ID 340.....198
20.4 Components - GA 75L VSD+ - ID 255 200V-400V-500V/50Hz, 200V-380V-460V/60Hz IEC, 230V-460V/60Hz UL-cUL.....200
20.5 Components - GA 75L VSD+ - ID 255 575V/60Hz UL-cUL.....208
20.6 Components - GA 90 VSD+ - ID 286 (200V-400V-500V/50Hz, 460V/60Hz) - IEC, 230V-460V/60Hz UL-cUL (20/07/2017 - 27/09/2018).....210
20.7 Components - GA 90 VSD+ - ID 286 (200V-400V-500V/50Hz, 460V/60Hz) - IEC, 230V-460V/60Hz UL-cUL (28/09/2018 - ...).....214
20.8 Components - GA 90 VSD+ - ID 286 200V-380V/60Hz - IEC (20/07/2017 - 31/07/2018).....218
20.9 Components - GA 90 VSD+ - ID 286 200V-380V/60Hz - IEC (01/08/2018 - ...).....222
20.10 Components - GA 90 VSD+ - ID 286 575V/60Hz - UL-cUL.....226
20.11 Components - GA 110 VSD+ - ID 340 (200V-400V-500V/50Hz, 460V/60Hz) - IEC, 230V-460V/60Hz UL-cUL.....228
20.12 Components - GA 110 VSD+ - ID 340 200V-380V/60Hz - IEC.....240
20.13 Components - GA 110 VSD+ - ID 340 575V/60Hz - UL-cUL.....244
20.14 Dryer rail Without trafo on dryer.....246
20.15 Dryer rail With trafo on dryer.....256
21 Regulation.....260
21.1 Electrical components and cubicle assembly 380V-460V/60Hz, 400V/50Hz - Non trafo.....260
21.2 Electrical components and cubicle assembly 380V-460V/60Hz, 400V/50Hz - Non trafo - Water-cooled.....270
21.3 Electrical components and cubicle assembly 380V-460V/60Hz, 400V/50Hz - Non trafo - ASME, MHLW.....272
21.4 Electrical components and cubicle assembly 200V-500V/50Hz, 200V-230V-575V/60Hz - Trafo.....274
21.5 Cubicle components GA 75L VSD+ - (200V-400V-500V/50Hz - IEC, 200V-380V-460V/60Hz - IEC, 230V-460V-575V/60Hz - UL-cUL) - Pack (20/07/2017 - 11/12/2018).....282
21.6 Cubicle components GA 75L VSD+ - (200V-400V-500V/50Hz - IEC, 200V-380V-460V/60Hz - IEC, 230V-460V-575V/60Hz - UL-cUL) - Pack (12/12/2018 - 27/11/2019).....350
21.7 Cubicle components GA 75L VSD+ - (200V-400V-500V/50Hz - IEC, 200V-380V-460V/60Hz - IEC, 230V-460V-575V/60Hz - UL-cUL) - Pack (28/11/2019 - ...).....404
21.8 Cubicle components GA 75L VSD+ - ((200V-400V-500V/50Hz, 460V/60Hz) - IEC, (230V-460V-575V/60Hz - UL-cUL)) - Full-Feature (28/08/2017 - 11/12/2018).....428
21.9 Cubicle components GA 75L VSD+ - ((200V-400V-500V/50Hz, 460V/60Hz) - IEC, (230V-460V-575V/60Hz - UL-cUL)) - Full-Feature (12/12/2018 - 27/11/2019).....504

21.10 Cubicle components GA 75L VSD+ - ((200V-400V-500V/50Hz, 460V/60Hz) - IEC, (230V-460V-575V/60Hz - UL-cUL)) - Full-Feature (28/11/2019 - ...)..... 582
21.11 Cubicle components GA 75L VSD+ - 200V-380V/60Hz - IEC - Full-Feature (20/07/2017 - 11/12/2018).....660
21.12 Cubicle components GA 75L VSD+ - 200V-380V/60Hz - IEC - Full-Feature (12/12/2018 - 27/11/2019).....674
21.13 Cubicle components GA 75L VSD+ - 200V-380V/60Hz - IEC - Full-Feature (28/11/2019 - ...).....688
21.14 Cubicle components GA 90 VSD+ - (200V-380V-460V/60Hz - IEC, 230V-460V-575V/60Hz - UL-cUL, 200V-400V-500V/50Hz - IEC) - Pack (20/07/2017 - 11/12/2018).....696
21.15 Cubicle components GA 90 VSD+ - (200V-380V-460V/60Hz - IEC, 230V-460V-575V/60Hz - UL-cUL, 200V-400V-500V/50Hz - IEC) - Pack (12/12/2018 - 16/12/2019).....724
21.16 Cubicle components GA 90 VSD+ - (200V-380V-460V/60Hz - IEC, 230V-460V-575V/60Hz - UL-cUL, 200V-400V-500V/50Hz - IEC) - Pack (17/12/2019 - ...).....780
21.17 Cubicle components GA 90 VSD+ - (200V-400V-500V/50Hz, 460V/60Hz - IEC, 230V-460V-575V/60Hz - UL-cUL) - Full-Feature (20/07/2017 - 11/12/2018).....834
21.18 Cubicle components GA 90 VSD+ - (200V-400V-500V/50Hz, 460V/60Hz - IEC, 230V-460V-575V/60Hz - UL-cUL) - Full-Feature (12/12/2018 - 16/12/2019).....878
21.19 Cubicle components GA 90 VSD+ - (200V-400V-500V/50Hz, 460V/60Hz - IEC, 230V-460V-575V/60Hz - UL-cUL) - Full-Feature (17/12/2019 - ...).....924
21.20 Cubicle components GA 90 VSD+ - 200V-380V/60Hz - IEC - Full-Feature (20/07/2017 - 11/12/2018).....964
21.21 Cubicle components GA 90 VSD+ - 200V-380V/60Hz - IEC - Full-Feature (12/12/2018 - 16/12/2019).....978
21.22 Cubicle components GA 90 VSD+ - 200V-380V/60Hz - IEC - Full-Feature (17/12/2019 - ...).....994
21.23 Cubicle components GA 110 VSD+ - (200V-380V-460V/60Hz - IEC, 230V-460V-575V/60Hz - UL-cUL, 200V-400V-500V/50Hz - IEC) - Pack (20/07/2017 - 11/12/2018).....1006
21.24 Cubicle components GA 110 VSD+ - (200V-380V-460V/60Hz - IEC, 230V-460V-575V/60Hz - UL-cUL, 200V-400V-500V/50Hz - IEC) - Pack (12/12/2018 - 04/02/2020).....1058
21.25 Cubicle components GA 110 VSD+ - (200V-380V-460V/60Hz - IEC, 230V-460V-575V/60Hz - UL-cUL, 200V-400V-500V/50Hz - IEC) - Pack (05/02/2020 - ...).....1138
21.26 Cubicle components GA 110 VSD+ - (200V-400V-500V/50Hz, 460V/60Hz - IEC, 230V-460V-575V/60Hz - UL-cUL) - Full-Feature (20/07/2017 - 11/12/2018).....1162
21.27 Cubicle components GA 110 VSD+ - (200V-400V-500V/50Hz, 460V/60Hz - IEC, 230V-460V-575V/60Hz - UL-cUL) - Full-Feature (12/12/2018 - 04/02/2020).....1238
21.28 Cubicle components GA 110 VSD+ - (200V-400V-500V/50Hz, 460V/60Hz - IEC, 230V-460V-575V/60Hz - UL-cUL) - Full-Feature (05/02/2020 - ...).....1290

21.29 Cubicle components GA 110 VSD+ - 200V-380V/60Hz - IEC - Full-Feature (20/07/2017 - 11/12/2018)....1330
21.30 Cubicle components GA 110 VSD+ - 200V-380V/60Hz - IEC - Full-Feature (12/12/2018 - 04/02/2020)....1344
21.31 Cubicle components GA 110 VSD+ - 200V-380V/60Hz - IEC - Full-Feature (05/02/2020 - ...)....1364
21.32 Regulating components (02/03/2017 - 11/12/2018).... 1374
21.33 Regulating components (12/12/2018 - ...).... 1376
22 Bodywork Pack....1378
23 Bodywork Full-Feature....1380
24 Bodywork Trafo....1384
25 Markings....1388
26 Standard options....1408
26.1 Energy recovery Pack 1408
26.2 Energy recovery Full-Feature.... 1410
26.3 Pre-filter Pack.... 1412
26.4 Pre-filter Full-Feature.... 1414
26.5 Tropical thermostat.... 1416
26.6 UD+ filter GA 75L VSD+, GA 90 VSD+ - Full-Feature.... 1418
26.7 UD+ filter GA 110 VSD+ - Full-Feature....1420
26.8 UD+ filter - Parts UD 310+....1422
26.9 UD+ filter - Parts UD 425+....1424
26.10 IT Ancillaries GA 75L VSD+ - 200V-380V/60Hz - Full-Feature (12/10/2017 - 11/12/2018)....1426
26.11 IT Ancillaries GA 75L VSD+ - 200V-380V/60Hz - Full-Feature (12/12/2018 - 27/11/2019)....1430
26.12 IT Ancillaries GA 75L VSD+ - 200V-380V/60Hz - Full-Feature (28/11/2019 - ...)...1434
26.13 IT Ancillaries GA 90 VSD+ - 200V-380V/60Hz - Full-Feature (17/10/2017 - 11/12/2018)....1438
26.14 IT Ancillaries GA 90 VSD+ - 200V-380V/60Hz - Full-Feature (12/12/2018 - 16/12/2019)....1442
26.15 IT Ancillaries GA 90 VSD+ - 200V-380V/60Hz - Full-Feature (17/12/2019 - ...).....1446
26.16 IT Ancillaries GA 110 VSD+ - 200V-380V/60Hz - Full-Feature (17/10/2017 - 11/12/2018)....1450
26.17 IT Ancillaries GA 110 VSD+ - 200V-380V/60Hz - Full-Feature (12/12/2018 - 04/02/2020)....1454
26.18 IT Ancillaries GA 110 VSD+ - 200V-380V/60Hz - Full-Feature (05/02/2020 - ...)...1458
26.19 IT Ancillaries GA 75L VSD+ - 200V-400V-500V/50Hz, 200V-230V-380V-460V-575V/60Hz - Pack (17/10/2017 - 11/12/2018).... 1462
26.20 IT Ancillaries GA 75L VSD+ - 200V-400V-500V/50Hz, 200V-230V-380V-460V-575V/60Hz - Pack (12/12/2018 - 27/11/2019).... 1466
26.21 IT Ancillaries GA 75L VSD+ - 200V-400V-500V/50Hz, 200V-230V-380V-460V-575V/60Hz - Pack (28/11/2019 - ...).... 1472

26.22 IT Ancillaries GA 90 VSD+ - 200V-400V-500V/50Hz, 200V-230V-380V-460V-575V/60Hz - Pack (17/10/2017 - 11/12/2018)..... 1478
26.23 IT Ancillaries GA 90 VSD+ - 200V-400V-500V/50Hz, 200V-230V-380V-460V-575V/60Hz - Pack (12/12/2018 - 16/12/2019)..... 1482
26.24 IT Ancillaries GA 90 VSD+ - 200V-400V-500V/50Hz, 200V-230V-380V-460V-575V/60Hz - Pack (17/12/2019 - ...)..... 1488
26.25 IT Ancillaries GA 110 VSD+ - 200V-400V-500V/50Hz, 200V-230V-380V-460V-575V/60Hz - Pack (17/10/2017 - 11/12/2018)..... 1494
26.26 IT Ancillaries GA 110 VSD+ - 200V-400V-500V/50Hz, 200V-230V-380V-460V-575V/60Hz - Pack (12/12/2018 - 04/02/2020)..... 1498
26.27 IT Ancillaries GA 110 VSD+ - 200V-400V-500V/50Hz, 200V-230V-380V-460V-575V/60Hz - Pack (05/02/2020 - ...)..... 1504
26.28 IT Ancillaries GA 75L VSD+ - 200V-400V-500V/50Hz, 230V-460V-575V/60Hz - Full-Feature (17/10/2017 - 11/12/2018)..... 1510
26.29 IT Ancillaries GA 75L VSD+ - 200V-400V-500V/50Hz, 230V-460V-575V/60Hz - Full-Feature (12/12/2018 - 27/11/2019)..... 1514
26.30 IT Ancillaries GA 75L VSD+ - 200V-400V-500V/50Hz, 230V-460V-575V/60Hz - Full-Feature (28/11/2019 - ...)..... 1518
26.31 IT Ancillaries GA 90 VSD+ - 200V-400V-500V/50Hz, 230V-460V-575V/60Hz - Full-Feature (17/10/2017 - 11/12/2018)..... 1522
26.32 IT Ancillaries GA 90 VSD+ - 200V-400V-500V/50Hz, 230V-460V-575V/60Hz - Full-Feature (12/12/2018 - 16/12/2019)..... 1526
26.33 IT Ancillaries GA 90 VSD+ - 200V-400V-500V/50Hz, 230V-460V-575V/60Hz - Full-Feature (17/12/2019 - ...)..... 1532
26.34 IT Ancillaries GA 110 VSD+ - 200V-400V-500V/50Hz, 230V-460V-575V/60Hz - Full-Feature (17/10/2017 - 11/12/2018)..... 1536
26.35 IT Ancillaries GA 110 VSD+ - 200V-400V-500V/50Hz, 230V-460V-575V/60Hz - Full-Feature (12/12/2018 - 04/02/2020)..... 1540
26.36 IT Ancillaries GA 110 VSD+ - 200V-400V-500V/50Hz, 230V-460V-575V/60Hz - Full-Feature (05/02/2020 - ...)..... 1544
26.37 MK5 expansion module..... 1548
26.38 Water shut-off valve..... 1550

EN - English

1 ORDERING PARTS
Always specify the part number, the name and quantity of the required items, as well as the type and serial number of the machine.

2 COLUMN INFORMATION
Ref - Reference number: links a specific part from the list to the drawing. Only parts with a reference number are shown in the drawing. Parts in the drawing without a reference number are simply there to illustrate the assembly.
Part number - Part number to be used when ordering spare parts.
When no part number is specified, the component is not available as a spare part.
Parts which are contained in a kit will have the kit number mentioned on the line below. For complete content of the kit see chapter "1 - Service kits".
A part number preceded by a black dot is comprised in the assembly right above.
Remarks: Additional information to the part number right above.
Substituted by: The part number right above has been replaced by another part number due to an update or revision.
Qty - Quantity: Indicates the number of parts in relation to the corresponding reference number. „AR" means „As required": quantity or number to be determined.
Name - Part name: Translations of the English names can be found in document "Glossary of part names".
Validity - Defines the timeframe and type/version of the machines the part is valid for. Clarification of the codes used in the validity pattern can be found in the legend at the bottom of the page. A validity pattern mentioned in the chapter title applies to the whole chapter. A plus sign in the pattern is to be interpreted as 'and', a comma as 'or'. Parentheses group the validity codes, similarly to mathematical parentheses, see following example:
'PRESS:8BAR + (FREQ:50HZ+MOVOL:500V , FREQ:60HZ+MOVOL:575V)' is valid for machines with 8 bar working pressure and 50Hz frequency and 500V supply voltage, or 8 bar working pressure and 60Hz frequency and 575V supply voltage.
EL – Reference to the drawing or the component inside the electric cubicle.
R. – Remarks: Extra information about the part. Explanation can be found at the bottom of the page.

BG - български

1 ПОРЪЧКА НА ЧАСТИ
Винаги цитирайте номера на частта, наименованието и количеството на необходимите изделия, както и типа и серийния номер на машината.

2 ИНФОРМАЦИЯ В КОЛОНИТЕ
Ref - Референтен номер: свързва дадена част от списъка с чертежа. На чертежа са показани само части с референтен номер.
Частите на чертежа без референтен номер са там, единствено за да се покаже възелът.
Part number - Номер на частта, който да се използва при поръчката на резервни части.
Ако не е посочен номер на частта, компонентът не се предлага като резервна част.
Частите, които се съдържат в даден комплект, ще включват номер на комплекта на долния ред. За пълното съдържание на комплекта вижте глава „1 – Service kits".
Номер на част, пред който има черна точка, се съдържа във възела непосредствено по-горе.
Remarks: Допълнителна информация за частта – непосредствено по-горе.
Substituted by: Номерът на частта непосредствено по-горе е заменен от друг номер на частта поради актуализация или ревизия.
Qty - Количество: Посочва броя на частите във връзка със съответния референтен номер. „AR" означава „Според нуждата": количеството или броят ще бъдат определени допълнително.
Name - Име на частта: превод на английските имена можете да откриете в документа „Glossary of part names".
Validity - Определя периода и типа/версията на машините, за които частта е валидна. Обяснение на елементите от кода, използвани в кода за валидността, можете да откриете в легендата в долната част на страницата. Кодът за валидността, посочен в заглавието на главата, се отнася за цялата глава. Знакът плюс в кода се приема за „и", а запетаята – за „или". Скобите групират елементите на кодовете за валидност подобно на математическите скоби, вижте следния пример:
„PRESS:8BAR + (FREQ:50HZ+MOVOL:500V , FREQ:60HZ+MOVOL:575V)" е валидно за машини с работно налягане 8 bar, честота 50 Hz и захранващо напрежение 500 V или работно налягане 8 bar, честота 60 Hz и захранващо напрежение 575 V.
EL – Референция към чертежа или компонента в електрическата кутия.
R.. – Забележки: допълнителна информация относно частта. Обяснения можете да намерите в долната част на страницата.

BR - Brasileiro

1 ENCOMENDANDO PEÇAS
Sempre especifique o número da peça, o nome e a quantidade dos itens necessários, assim como o tipo e o número de série da máquina.
Páginas marcadas com o símbolo Serviço - " " contêm peças do(s) Kit(s) de serviço. Para conhecer o conteúdo completo do kit, consulte o capítulo "1 - Service kits" (1 - Kits de serviço).
2 INFORMAÇÕES SOBRE AS COLUNAS
Ref. - Número de referência: indica onde está uma peça específica listada no desenho. Somente peças com número de referência são mostradas no desenho. As peças no desenho que não têm um número de referência destinam-se simplesmente a ilustrar o conjunto.
Part number - Número da peça: se nenhum número de peça estiver especificado, o componente não está disponível como peça sobressalente. Uma linha mostrada em negrito é um conjunto. Uma peça cujo número seja seguido por um ponto preto faz parte do conjunto impresso em negrito imediatamente acima dela.
O símbolo "<<< >>>" direciona para outra lista com o mesmo título, como "Name" (Nome).
Quando o número de peça específico é colocado abaixo da linha "Ref."/"Name" (Ref. / Nome), é preciso escolher o tipo/versão da máquina.
Qty - Quantidade: indica o número de peças e os números de referência correspondentes. "AR" significa "As required" (Conforme solicitado): a quantidade ou o número a ser determinado.
Name - Nome da peça: as traduções dos nomes em inglês podem ser encontradas no documento "Glossary of part names" (Glossário de nomes de peças).
Remarks - Observações - Informações extras sobre a peça.
Uma série de letras pode indicar que uma determinada peça é certificada pelo órgão autorizado específico, de acordo com os códigos ou as regras da lista.
As medidas são fornecidas em milímetros.

CS - čeština

1 OBJEDNÁNÍ DÍLŮ
Vždy uveďte číslo dílu, název a množství požadovaných položek a také typ a sériové číslo stroje.

2 INFORMACE VE SLOUPCÍCH
Ref – Referenční číslo: Propojuje konkrétní díl ze seznamu s výkresem. Pouze díly s referenčním číslem jsou zobrazeny na výkresu. Díly bez referenčního čísla, které jsou na výkresu uvedeny, slouží pouze jako ilustrace.
Part number – Číslo dílu se používá pro objednávání náhradních dílů.
Pokud není uvedeno žádné číslo dílu, komponenta není k dispozici jako náhradní díl.
Díly obsažené v sadě mají na následujícím řádku uvedeno číslo sady. Úplný obsah sady viz kapitolu „1 – Service kits".
Díl s číslem, před kterým je černý puntík, je obsažen v sestavě přímo nad ním.
Remarks: Další informace k číslu dílu přímo nad ním.
Substituted by: Číslo dílu přímo nad ním bylo nahrazeno jiným číslem dílu v důsledku aktualizace nebo revize.
Qty – Množství: Indikuje počet dílů pro odpovídající referenční číslo. „AR" znamená „As required" (Podle potřeby): množství nebo počet bude určen.
Name – Název dílu: Překlady anglických názvů naleznete v dokumentu „Glossary of part names".
Validity – Definuje časový rámec a typ/verzi strojů, na které se daný díl vztahuje. Objasnění kódů použitých ve vzorci platnosti naleznete v legendě na konci stránky. Vzorec platnosti uvedený v názvu kapitoly se vztahuje na celou kapitolu. Znaménko plus ve vzorci se interpretuje jako „a" a čárka jako „nebo". Závorky seskupují kódy platnosti, obdobně jako matematické závorky, viz následující příklad:
„PRESS:8BAR + (FREQ:50HZ+MOVOL:500V , FREQ:60HZ+MOVOL:575V)" platí pro stroje s provozním tlakem 8 bar, frekvencí 50 Hz a napájecím napětím 500 V nebo pro stroje s provozním tlakem 8 bar, frekvencí 60 Hz a napájecím napětím 575 V.
EL – Reference na výkres nebo komponentě uvnitř elektrického rozvaděče.
R. – Poznámky: Doplňující informace o dílu. Vysvětlení naleznete na konci stránky.

DA - Dansk

1 BESTILLING AF DELE
Angiv altid styknummeret, navnet på og antallet af de ønskede varer samt typen og serienummeret for maskinen.

2 OPLYSNINGER TIL KOLONNERNE
Ref - Referencenummer: Knytter en bestemt del fra listen til tegningen. Kun dele med et referencenummer vises på tegningen. Dele på tegningen uden et referencenummer er blot medtaget for at vise samlingen.
Part number - Styknummer, der skal bruges ved bestilling af reservedele.
Hvis der ikke er angivet et styknummer, fås komponenten ikke som reservedel.
Dele, der er indeholdt i et sæt, har sætnummeret stående på linjen nedenfor. Se kapitel "1 – Service kits" for at få vist hele indholdet af sættet.
Et styknummer med en sort prik foran indgår i samlingen lige ovenfor.
Remarks: Der findes yderligere oplysninger til styknummeret lige ovenfor.
Substituted by: Styknummeret lige ovenfor er blevet erstattet af et andet styknummer i forbindelse med en opdatering eller en revidering.
Qty - Antal: Angiver antallet af dele, der hører til det tilsvarende referencenummer. "AR" står for "As required": Antallet eller nummeret skal fastsættes.
Name - Navn på del: Oversættelser af de engelske navne kan findes i dokumentet "Glossary of part names".
Validity - Angiver tidshorisont og maskintype/-version, som delen gælder for. Forklaringer til koderne, der anvendes i modellen for gyldigheden, kan findes i teksten nederst på siden. En model for gyldigheden, der er nævnt i kapitlets titel, gælder for hele kapitlet. Et plustegn i modellen skal fortolkes som et "og", og et komma som et "eller". Parenteser inddeler koderne, der beskriver gyldigheden, på samme måde som parenteser i matematik. Se følgende eksempel:
„PRESS:8BAR + (FREQ:50HZ+MOVOL:500V , FREQ:60HZ+MOVOL:575V)“ gælder for maskiner med et arbejdstryk på 8 bar, en frekvens på 50 Hz og en forsyningsspænding på 500 V eller for maskiner med et arbejdstryk på 8 bar, en frekvens på 60 Hz og en forsyningsspænding på 575 V.
EL – Refererer til tegningen eller komponenten inde i elskabet.
R. - Bemærkninger: Yderligere oplysninger om delen. Forklaringer kan findes nederst på siden.

DE - Deutsch

1 TEILE BESTELLEN
Geben Sie immer genau die Teilenummer, den Namen und die Anzahl des gewünschten Artikels und den Typ und die Seriennummer der Maschine an.

2 SPALTENINFORMATION
Ref - Referenznummer: Verknüpft ein spezifisches Teil der Liste mit der Zeichnung. Es werden nur Referenznummern in der Zeichnung gezeigt. In der Zeichnung dargestellte Teile ohne Referenznummer sind einfach nur zu Illustrationszwecken der Baugruppe abgebildet.
Part number - Die Teilenummer wird bei der Bestellung von Ersatzteilen angegeben.
Ist keine Teilenummer angegeben, ist die Komponente nicht als Ersatzteil verfügbar.
Bei Teilen, die zu einem Set gehören, wird die Setnummer unten auf der Linie angegeben. Zum kompletten Inhalt des Sets siehe Kapitel „1 – Service kits“.
Eine mit einem schwarzen Punkt versehene Teilenummer ist in dem direkt darüber stehenden Set enthalten.
Remarks: Zusätzliche Informationen zur Teilenummer stehen direkt darüber.
Substituted by: Die direkt darüber stehende Teilenummer wurde aufgrund einer Aktualisierung oder Überarbeitung durch eine andere Teilenummer ersetzt.
Qty - Anzahl: Gibt die Anzahl der Teile im Verhältnis zur entsprechenden Referenznummer an. „AR“ steht für „Nach Bedarf“: Anzahl oder Nummer muss noch angegeben werden.
Name - Teilename: Übersetzungen der englischen Bezeichnungen finden Sie im Dokument „Glossary of part names“.
Validity - Gibt den Zeitrahmen und den Typ/die Version der Maschine vor, für die die Teile gültig sind. Eine Erläuterung der Codes, die für das Gültigkeitsmuster angewandt werden, finden Sie am Fuß der Seite. Ein im Kapiteltitel genanntes Gültigkeitsmuster bezieht sich auf das gesamte Kapitel. Ein Pluszeichen im Muster steht für „und“, ein Komma für „oder“. Klammern fassen die Codes in Gruppen zusammen, ähnlich wie bei mathematischen Klammern. Siehe dazu folgendes Beispiel:
„PRESS:8BAR + (FREQ:50HZ+MOVOL:500V , FREQ:60HZ+MOVOL:575V)“ ist für Maschinen gültig mit 8 bar-Betriebsdruck, 50 Hz-Frequenz und 500 V-Versorgungsspannung oder 8 bar-Betriebsdruck, 60 Hz-Frequenz und 575 V-Versorgungsspannung.
EL – Referenz zu der Zeichnung oder dem Bauteil im Inneren des Schaltkastens.
R. – Anmerkungen: Zusatzinformationen zum Teil. Erklärungen finden Sie am Fuß der Seite.

EL - ελληνικά

1 ΠΑΡΑΓΓΕΛΙΑ ΑΝΤΑΛΛΑΚΤΙΚΩΝ
Πρέπει πάντα να προσδιορίζετε τον κωδικό εξαρτήματος, την ονομασία και την ποσότητα των απαιτούμενων ειδών, καθώς και τον τύπο και τον αριθμό σειράς του μηχανήματος.

2 ΠΛΗΡΟΦΟΡΙΕΣ ΓΙΑ ΤΙΣ ΣΤΗΛΕΣ
Ref - Κωδικός αναφοράς: συσχετίζει ένα συγκεκριμένο εξάρτημα από τη λίστα με το σχέδιο. Μόνο εξαρτήματα που έχουν κωδικό αναφοράς εμφανίζονται στο σχέδιο. Τα εξαρτήματα στο σχέδιο που δεν έχουν κωδικό αναφοράς, υπάρχουν απλώς για την εικονογράφηση του συγκροτήματος.
Part number - Κωδικός εξαρτήματος, ο οποίος χρησιμοποιείται κατά την παραγγελία ανταλλακτικών.
Όταν δεν αναφέρεται κάποιος κωδικός εξαρτήματος, το εξάρτημα δεν διατίθεται ως ανταλλακτικό.
Για τα εξαρτήματα που περιέχονται σε κιτ, ο αριθμός του κιτ θα αναφέρεται στην παρακάτω γραμμή. Για το πλήρες περιεχόμενο του κιτ, βλ. κεφάλαιο "1 – Service kits".
Όταν μπροστά από τον κωδικό εξαρτήματος υπάρχει μια μαύρη κουκίδα, το εξάρτημα περιέχεται στο συγκρότημα που βρίσκεται ακριβώς από πάνω.
Remarks (Παρατηρήσεις): Πρόσθετες πληροφορίες για τον κωδικό εξαρτήματος ακριβώς από πάνω.
Substituted by (Έχει αντικατασταθεί από): Ο πιο πάνω κωδικός εξαρτήματος έχει αντικατασταθεί από άλλο κωδικό εξαρτήματος λόγω ενημέρωσης ή αναθεώρησης.
Qty - Ποσότητα: Δείχνει τον αριθμό των εξαρτημάτων σε σχέση με τον αντίστοιχο κωδικό αναφοράς. Το "AR" σημαίνει "As required" (Αναλόγως των απαιτήσεων): η ποσότητα ή ο αριθμός θα πρέπει να προσδιοριστούν.
Name - Ονομασία εξαρτήματος: Μεταφράσεις των ονομασιών από τα αγγλικά μπορείτε να βρείτε στο έγγραφο "Glossary of part names".
Validity - Καθορίζει το χρονικό πλαίσιο και τον τύπο/την έκδοση των μηχανημάτων στα οποία μπορεί να χρησιμοποιηθεί το εξάρτημα. Στο υπόμνημα, στο κάτω μέρος της σελίδας, μπορείτε να βρείτε μια αποσαφήνιση των κωδικών που χρησιμοποιούνται στο υπόδειγμα ισχύος παραγγελίας. Εάν αναφέρεται ένα υπόδειγμα ισχύος παραγγελίας στον τίτλο του κεφαλαίου, αυτό ισχύει για ολόκληρο το κεφάλαιο. Ένα σύμβολο "συν" στο υπόδειγμα θα πρέπει να ερμηνεύεται ως "και", ένα κόμμα ως "ή". Οι παρενθέσεις ομαδοποιούν τους κωδικούς ισχύος παραγγελίας, όπως οι παρενθέσεις στους μαθηματικούς τύπους. Δείτε το ακόλουθο παράδειγμα:
Το 'PRESS:8BAR + (FREQ:50HZ+MOVOL:500V , FREQ:60HZ+MOVOL:575V)' ισχύει για μηχανήματα με πίεση λειτουργίας 8 bar, συχνότητα 50 Hz και τάση τροφοδοσίας 500 V ή με πίεση λειτουργίας 8 bar, συχνότητα 60 Hz και τάση τροφοδοσίας 575 V.
EL – Κωδ. αναφοράς για το σχέδιο ή το εξάρτημα στο εσωτερικό του ηλεκτρικού πίνακα.
R. – Παρατηρήσεις: Πρόσθετες πληροφορίες σχετικά με το εξάρτημα. Επεξήγηση παρέχεται στο κάτω μέρος της σελίδας.

ES - Español

1 PEDIDO DE PIEZAS
Especifique siempre el número de referencia, el nombre y la cantidad de los elementos que necesita, además del tipo y número de serie de la máquina.

2 INFORMACIÓN DE LAS COLUMNAS
Ref - Número de referencia: enlaza una pieza concreta de la lista con el solo. Solo se muestran piezas con número de referencia en el plano. Las piezas del plano que no tienen números de referencia solo se muestran para ilustrar el conjunto.
Part number - Designación que se debe utilizar para pedir piezas de repuesto.
Si no se especifica una designación, esto quiere decir que el componente no está disponible como pieza de repuesto.
Las piezas que forman parte de un kit tendrán el número de kit en la línea inferior. Para consultar el contenido completo del kit, consulte el capítulo "1 – Service kits".
Una designación precedida por un punto negro forma parte del conjunto inmediatamente superior.
Remarks: información adicional de la designación inmediatamente superior.
Substituted by: la designación inmediatamente superior se ha sustituido por otra debido a una actualización o revisión.
Qty - Cantidad: indica el número de piezas en relación con el número de referencia correspondiente. "AR" significa "Según necesidad": cantidad o número a determinar.
Name - Nombre de la pieza: las traducciones de los nombres en inglés pueden encontrarse en el documento " Glossary of part names"
Validity - Define el periodo y tipo/versión de las máquinas en las que se puede utilizar la pieza. Puede encontrar una explicación de los códigos utilizados en el patrón de validez en la leyenda de la parte inferior de la página. Un patrón de validez mencionado en el título del capítulo es aplicable a todo el capítulo. Un signo '+' en el patrón debe interpretarse como una 'y' y una coma debe interpretarse como una 'o'. Los paréntesis agrupan los códigos de validez de manera similar a su uso en matemáticas; véase el siguiente ejemplo:
'PRESS:8BAR + (FREQ:50HZ+MOVOL:500V , FREQ:60HZ+MOVOL:575V)' es válido para máquinas con una presión de trabajo de 8 bar, una frecuencia de 50 Hz y un voltaje de alimentación de 500 V o de 8 bar, una frecuencia de 60 Hz y un voltaje de alimentación de 575 V.
EL – Referencia al plano o el componente del interior del armario eléctrico.
R. – Notas: información adicional sobre la pieza; se puede encontrar la explicación en la parte inferior de la página.

ET - Eesti

1 OSADE TELLIMINE
Täpsustage alati osa number, soovitud ühikute nimi ja kogus, aga ka masina tüüp ja seerianumber.

2 TEABE TULP
Ref - Viitenumber: seostab loendis nimetatud konkreetse osa joonisega. Joonisel on näidatud ainult viitenumbriga osad. Joonisel ilma viitenumbrita esitatud osadel on koostu kuvamisel illustreeriv tähendus.
Part number - Osa number, mida varuosade tellimisel kasutada.
Kui osa numbrit ei ole täpsustatud, ei ole vastav osa varuosana saadaval.
Komplekti kuuluvate osade puhul on alloleval real nimetatud komplekti number. Komplekti tervikliku kirjelduse leiate peatükist „1- Service kits".
Kui osa numbri ees on must punkt, sisaldub osa ülaltoodud koostus.
Remarks: osa numbri kohal kuvatav lisateave.
Substituted by: ülaltoodud osa number on uuenduse või kontrolli tulemusena asendatud teise osa numbriga.
Qty - Kogus: osutab asjaomase viitenumbriga seotud osade arvule. „AR" tähendab „vastavalt vajadusele": kogus või arv tuleb kindlaks määrata.
Name - Osa nimi: inglisekeelsete nimede tõlked leiate dokumendist „Glossary of part names".
Validity - Määratleb ajavahemiku ja masina tüübi/versiooni, mille puhul osa kasutatakse. Kasutusmustris kasutatud koodide selgituse leiate iga lehekülje allosas olevast legendist. Peatüki pealkirjas nimetatud kasutusmuster kohaldub tervele peatükile. Mustris kasutatud plussmärki tuleb tõlgendada sõnana „ja", komana või sõnana „või". Sarnaselt ümarsulgude matemaatikas kasutamisele rühmitavad ümarsulud kehtivuskoodide rühmad; vt järgmist näidet: 'PRESS:8BAR + (FREQ:50HZ+MOVOL:500V , FREQ:60HZ+MOVOL:575V)' kehtib masinate puhul, mille töörõhk on 8 bar ja sagedus 50 Hz ja toitepinge 500 V, või siis masinate puhul, mille töörõhk on 8 bar ja sagedus 60 Hz ja toitepinge 575V.
EL – Viide joonisele või elektrikapis olevale osale.
R. - Märkused: lisateave osa kohta. Selgituse leiate lehekülje allosast.

FI - Suomalainen

1 OSIEN TILAAMINEN
Määritä aina osanumero, haluttujen tuotteiden nimi ja määrä sekä koneen tyyppi ja sarjanumero.

2 SARAKETIEDOT
Ref - Viitenumero: Yhdistää jonkin tietyn luettelossa mainitun osan piirrokseen. Piirroksessa näkyvät vain ne osat, joilla on viitenumero. Ne osat, joilla ei ole viitenumeroa, ovat piirroksessa vain kokoonpanoa kuvaamassa.
Part number - Osanumero, jota on käytettävä varaosia tilattaessa.
Jos osanumeroa ei ole määritetty, komponentti ei ole saatavana varaosana.
Sarjan mukana tulevilla osilla on sarjanumero, joka on merkitty alla olevalle viivalle. Lue tiedot sarjan täydellisestä sisällöstä luvusta 1 – Service kits.
Osanumero, jota edeltää musta piste, sisältyy edellä olevaan kokoonpanoon.
Remarks: lisätietoja edellä olevaan osanumeroon.
Substituted by: edellä oleva osanumero on korvattu toisella osanumerolla päivityksen tai korjauksen takia.
Qty - Määrä: Osoittaa viitenumeroon liittyvien osien määrän. AR (As required) tarkoittaa määritettävää määrää.
Name - Osan nimi: englanninkielisten nimien käännökset on kerrottu asiakirjassa ”Glossary of part names”.
Validity - Määrittää sen ajanjakson ja koneiden tyypin tai version, joita osa koskee. Määrityskaavassa käytetyt koodit on selitetty sivun alalaidan kuvatekstissä. Luvun otsikossa mainittu määrityskaava koskee koko lukua. Kaavassa oleva plusmerkki tarkoittaa ja-sanaa ja pilkku tai-sanaa. Sulkeet ryhmittävät määrityskoodit matemaattisten sulkeiden tavalla, esimerkiksi näin:
PRESS:8BAR + (FREQ:50HZ+MOVOL:500V , FREQ:60HZ+MOVOL:575V) koskee koneita, joiden työskentelypaine on 8 baaria, taajuus 50 hertsiä ja verkkojännite 500 volttia tai joiden työskentelypaine on 8 baaria, taajuus 60 hertsiä ja verkkojännite 575 volttia.
EL – Viittaus piirrokseen tai sähkökotelon sisällä olevaan komponenttiin.
R. – Huomautukset: Lisätietoja osasta. Selitys on sivun alalaidassa.

FR - Français

1 COMMANDER DES PIÈCES
Toujours spécifier le numéro de pièce, la désignation et la quantité des articles souhaités ainsi que le type et le numéro de série de la machine.

2 COLONNE INFORMATIONS
Ref - Référence : associe une pièce donnée de la liste au schéma. Seules les pièces avec une référence sont illustrées sur le schéma. Les pièces représentées sur le schéma sans référence servent uniquement à illustrer l'ensemble.
Part number - Numéros de pièce à utiliser lors de la commande de pièces de rechange.
Si aucun numéro de pièce n'est indiqué, le composant n'est pas disponible en tant que pièce de rechange.
Pour les pièces contenues dans un kit, le numéro de kit est mentionné à la ligne ci-dessous. Pour voir le contenu du kit en détail, consulter le chapitre « 1 – Service Kits ».
Un numéro de pièce précédé d'un point noir est compris dans l'ensemble ci-dessus.
Remarks : informations supplémentaires sur le numéro de pièce ci-dessus.
Substituted by : le numéro de pièce ci-dessus a été remplacé par un autre numéro de pièce suite à une mise à jour ou une révision.
Qty - Quantité : indique le nombre de pièces en fonction du numéro de pièce correspondant. « AR » signifie « As required » (autant que nécessaire) : quantité ou nombre à définir.
Name - Désignation de la pièce : les traductions des désignations anglaises sont disponibles dans le document « Glossary of part names ».
Validity - Définit le délai et le type/version de machines pour lesquels les pièces sont valides. Pour plus de détails sur les codes utilisés dans le modèle de validité, voir la légende en bas de page. Un modèle de validité mentionné dans le titre du chapitre s'applique à l'ensemble du chapitre. Le signe plus utilisé dans le modèle se comprend comme un « et », une virgule comme un « ou». Les parenthèses regroupent les codes de validité, comme en mathématiques, voir l'exemple suivant :
« PRESS:8BAR + (FREQ:50HZ+MOVOL:500V , FREQ:60HZ+MOVOL:575V) » est valide pour des machines avec une pression de service de 8 bar et une fréquence de 50 Hz et une tension d'alimentation de 500 V ou une pression de service de 8 bar et une fréquence de 60 Hz et une tension d'alimentation de 575 V.
EL – Référence sur le schéma ou le composant à l'intérieur de l'armoire électrique.
R. – Remarque : informations supplémentaires sur la pièce. Pour plus de détails, voir le bas de page.

HU - Magyar

1 ALKATRÉSZRENDELÉS
Mindig adja meg a cikkszámot, a kért elemek nevét és mennyiségét, valamint a típust és a gyári számot.

2 A TÁBLÁZAT OSZLOPAI
Ref - Hivatkozási szám: a felsorolt alkatrészt a megfelelő ábrához társítja. A rajzon csak hivatkozási számmal ellátott alkatrészek láthatók. Az ábrán a hivatkozási számmal nem rendelkező alkatrészek csak az összeszerelés módját illusztrálják.
Part number - A pótalkatrészek rendelésénél használandó cikkszám.
Ha nincs megadva cikkszám, az adott alkatrész nem kapható pótalkatrészként.
Azokra az alkatrészekre, amelyek egy készlet részeként kaphatók, a készlet cikkszáma vonatkozik, amely az alsó sorban szerepel. A készlet teljes tartalmát lásd: „1 – Service Kits” című fejezet.
Ha egy cikkszámot pont előz meg, az illető alkatrész a közvetlenül felette lévő sorban szereplő egység részét képezi.
Remarks: További információk a közvetlenül felette lévő sorban szereplő cikkszámra vonatkozóan.
Substituted by: A közvetlenül felette lévő sorban szereplő cikkszámot frissítés vagy új változat következtében új cikkszám váltotta fel.
Qty - Mennyiség: az adott hivatkozási számhoz kapcsolódó alkatrészek számát jelöli. Az „AR” jelentése „As required” (igény szerint): itt megadhatja a mennyiséget vagy a számot.
Name - Az alkatrész neve: az angol nyelvű elnevezések fordítása az „Glossary of part names” c. dokumentumban található.
Validity - Azt az időkeretet, továbbá azokat a géptípusokat/-verziókat adja meg, amelyekhez az alkatrész használható. Az érvényességi formulában használt kódok magyarázata a lap alján olvasható. A fejezetcímben szereplő érvényességi formula az egész fejezetre érvényes. A formulában szereplő plusz (+) jel jelentése: „és”, a vessző (,) jelentése: „vagy”. A zárójelek a matematikában használt zárójelekhez hasonlóan csoportosítják az érvényességi kódokat; lásd a következő példát:
A „PRESS:8BAR + (FREQ:50HZ+MOVOL:500V , FREQ:60HZ+MOVOL:575V)” 8 bar üzemi nyomású, 50 Hz frekvenciájú és 500 V tápfeszültségű, vagy 8 bar üzemi nyomású, 60 Hz frekvenciájú és 575 V tápfeszültségű berendezéseket jelöl.
EL – Hivatkozás az elektromos szekrényen belüli ábrára vagy alkatrészre.
R. – Megjegyzések: Az alkatrésszel kapcsolatos további információk. A magyarázat a lap alján található.

IT - Italiano

1 ORDINE DEI RICAMBI
Specificare sempre il numero categorico, il nome e la quantità degli articoli richiesti, oltre al tipo e al numero di serie della macchina.

2 COLONNA DELLE INFORMAZIONI
Ref - Numero di riferimento: associa un ricambio specifico dalla lista all'illustrazione. Nell'illustrazione sono mostrati solo ricambi dotati di numero di riferimento. I ricambi presenti nell'illustrazione privi di numero di riferimento sono riportati semplicemente per illustrare il montaggio.
Part number - Numero categorico da utilizzare per l'ordine di parti di ricambio.
Quando non è specificato alcun numero categorico, il componente non è disponibile come parte di ricambio.
I ricambi contenuti in un kit avranno il numero di kit riportato nella riga sottostante. Per il contenuto completo del kit vedere il capitolo "1 – Service kits".
Un numero categorico preceduto da un punto nero fa parte del gruppo immediatamente precedente.
Remarks: le informazioni aggiuntive relative al numero categorico sono riportate in alto.
Substituted by: il numero categorico immediatamente precedente è stato sostituito da un altro numero categorico a causa di un aggiornamento o di una revisione.
Qty - Quantità: indica il numero di ricambi corrispondenti al numero di riferimento. "AR" significa "As required" (Secondo necessità): quantità o numero da definire.
Name - Nome parte: la traduzione dei termini dall'inglese è reperibile nel documento "Glossary of part names".
Validity - Definisce i tempi e il tipo/versione di macchine per le quali il ricambio è valido. La legenda in fondo alla pagina riporta una spiegazione dei codici utilizzati nello schema di validità. Uno schema di validità menzionato nel titolo del capitolo si applica all'intero capitolo. Un segno più nello schema deve essere interpretato come "e", una virgola come "o". Tra le parentesi sono raggruppati i codici di validità, al pari delle parentesi matematiche, vedere il seguente esempio:
"PRESS:8BAR + (FREQ:50HZ+MOVOL:500V , FREQ:60HZ+MOVOL:575V)" è valido per le macchine con pressione di esercizio di 8 bar e 50Hz di frequenza e una tensione di alimentazione di 500 V, o con pressione di esercizio di 8 bar, frequenza di 60Hz e tensione di alimentazione di 575 V.
EL – Riferimento all'illustrazione o al componente all'interno dell'armadio elettrico.
R. – Note: informazioni aggiuntive sulla spiegazione dei ricambi sono reperibili in fondo alla pagina.

JA - 日本の

1 部品の注文
部品番号、注文するアイテムの名称および数量、機器のタイプおよびシリアル番号を必ず指定してください。
サービスマーク" "のついたページにはサービスキットの部品が記載されています。 キットの内容物については、第1章「サービスキット」を参照してください。
2 各列の説明
Ref. - 参照番号：リストの部品が図のどこにあるかを示します。 参照番号がある部品のみが図に示されています。 参照番号がない部品はアセンブリを表現するため便宜上表記されています。
Part number - 部品番号：部品番号が示されていない部品は、スペア部品としては提供されていません。 太字の行はアセンブリを示します。 番号の後に黒い点が付いている部品は、すぐ上にある太字のアセンブリを構成しています。
"<<< >>>"は、"Name"と同じタイトルの別のリストを示します。
"**Ref**."または"Name"行の下に、特定の部品の部品番号が記載されている場合は、機器のタイプ/バージョンに応じて部品を選択してください。
Qty - 数量：参照番号に対応する部品の数量を示します。 „AR"は「必要に応じて」を意味し、必要に応じて数量または番号を指定します。
Name - 部品名：英語に対応する各言語の名称は「Glossary of part names」（部品名称対応表）に記載されています。
Remarks - 部品に関する追加情報です。
一連の文字列は特定の部品が指定認定団体によって承認されていることを示し、リストのコードまたは規定に準拠しています。
測定値はミリメートル単位で示されています。

LT - Lietuvos

1 DALIŲ UŽSAKYMAS
Visada nurodykite pageidaujamos prekės dalies numerį, pavadinimą ir kiekį. Taip pat nurodykite įrenginio tipą ir serijos numerį.

2 INFORMACIJA STULPELIUOSE
Ref - Nuorodos numeris: susieja konkrečią dalį iš sąrašo su brėžiniu. Brėžinyje rodomos tik nuorodos numerį turinčios dalys. Brėžinyje parodytos dalys be nuorodos numerio yra tiesiog įrenginio iliustracija.
Part number - Dalies numeris, naudojamas užsakant atsargines dalis.
Jei dalies numeris nenurodytas, komponentas negalimas kaip atsarginė dalis.
Rinkinyje esančios dalys turi rinkinio numerį, minimą apatinėje eilutė. Visą rinkinio turinį gali pamatyti skyriuje „1 – Service kits".
Jei prieš dalies numerį yra juodas taškas, jis yra viršuje pateiktame įrenginyje.
Remarks: papildoma dalies numerio informacija pateikta dešinėje pusėje viršuje.
Substituted by: dešinėje viršuje nurodytas dalies numeris buvo pakeistas kitu dalies numerio, nes vyko atnaujinimas arba revizija.
Qty - Kiekis: pateikiamas dalių, kurioms priskiriamas atitinkamas nuorodos numeris, skaičius. „AR" reiškia „Priklausomai nuo poreikio": kiekis arba skaičius bus nustatytas to prireikus.
Name - Dalies pavadinimas: anglų kalba pateiktų pavadinimų vertimus rasite dokumente „Glossary of part names".
Validity - Apibūdinamas laikotarpis ir įrenginio tipas / versija, kurioms dalis tinka. Tinkamumo šablone naudojami kodai paaiškinti puslapio apačioje esančioje legendoje. Tinkamumo šablonas skyriaus pavadinimas taikomas visam skyriui. Pliuso ženklas šablone reiškia „ir", o kablelis – „arba". Skliaustais grupuojami tinkamumo kodai (kaip ir matematiniai veiksmai), žr. pavyzdį:
„PRESS:8BAR + (FREQ:50HZ+MOVOL:500V , FREQ:60HZ+MOVOL:575V)" tinka įrenginiams, kurių darbinis slėgis yra 8 barai, dažnis yra 50 Hz, o maitinimo įtampa yra 500 V, arba darbinis slėgis yra 8 barai, dažnis yra 60 Hz, o maitinimo įtampa yra 575 V.
EL – Nuoroda į brėžinį arba komponentą elektros modulio viduje.
R. – Pastabos: papildoma informacija apie dalį. Paaiškinimus galite rasti puslapio apačioje.

LV - Latvijas

1. DETAĻU PASŪTĪŠANA
Vienmēr norādiet detaļas numuru, nosaukumu un vajadzīgo daudzumu, kā arī iekārtas tipu un sērijas numuru.

2. KOLONNAS INFORMĀCIJA
Ref – Atsauces numurs: saista konkrētu sarakstā esošo detaļu ar rasējumu. Rasējumā tiek parādītas tikai detaļas ar atsauces numuru. Detaļas rasējumā bez atsauces numura paredzētas vienīgi tam, lai attēlotu attiecīgo mezglu.
Part number – Detaļas numurs, kas jāizmanto, pasūtot rezerves daļas.
Ja detaļas numurs nav norādīts, attiecīgais komponents nav pieejams kā rezerves daļa.
Komplektā iekļautām detaļām nākamajā rindā būs norādīts komplekta numurs. Komplekta pilnīgs saturs aprakstīts nodaļā "1 – Service kits".
Ja pirms detaļas numura ir melns punkts, tā ir iekļauta iepriekš attēlotajā mezglā.
Remarks: papildinformācija par iepriekšējo detaļas numuru.
Substituted by: iepriekšējais detaļas numurs ir aizstāts ar citu detaļas numuru atjaunināšanas vai pārskatīšanas dēļ.
Qty – Daudzums: apzīmē detaļu skaitu attiecīgajam atsauces numuram. "AR" nozīmē "pēc nepieciešamības": jānosaka daudzums vai numurs.
Name – Detaļas nosaukums: angļu valodas nosaukumu tulkojumi ir atrodami dokumentā "Glossary of part names".
Validity – Nosaka iekārtu derīguma periodu un tipu/versiju. Derīguma norādē iekļauto kodu skaidrojums ir norādīts eksplikācijā lappuses apakšdaļā. Nodaļas virsrakstā minētā derīguma norāde attiecas uz visu nodaļu. Pluszīme norādē jāinterpretē kā "un", bet komats kā "vai". Iekavas grupē derīguma kodus līdzīgi kā iekavas matemātikā, piemēram: "PRESS:8BAR + (FREQ:50HZ+MOVOL:500V , FREQ:60HZ+MOVOL:575V)" ir derīgs iekārtām ar 8 bāru darba spiedienu, 50 Hz frekvenci un 500 V barošanas spriegumu vai iekārtām ar 8 bāru darba spiedienu, 60 Hz frekvenci un 575 V barošanas spriegumu.
EL – Atsauce uz rasējumu vai elektrosadales skapja komponentu.
R. – Piezīmes: papildinformācija par detaļu. Skaidrojums atrodams lappuses apakšdaļā.

NL - Nederlands

1 BESTELLEN VAN ONDERDELEN
Vermeld altijd het onderdeelnummer, de benaming en de hoeveelheid van de gewenste onderdelen, alsmede het type en het serienummer van de machine.

2 KOLOMINFORMATIE
Ref. - Referentienummer: koppelt een specifiek onderdeel in de lijst aan de desbetreffende tekening. Alleen onderdelen met een referentienummer zijn in de tekening afgebeeld. Onderdelen zonder referentienummer die op de tekening voorkomen, worden slechts getoond om het geheel te illustreren.
Part number - Onderdeelnummer dat wordt gebruikt voor het bestellen van reserveonderdelen.
Indien geen onderdeelnummer is aangegeven, is de betreffende component niet als reserveonderdeel verkrijgbaar.
Van onderdelen uit een kit wordt het kitnummer op de regel eronder vermeld. Voor de volledige inhoud van de kit, zie paragraaf "1 - Service kits".
Een onderdeel waarvan het nummer gevolgd wordt door een zwart rondje, maakt deel uit van het vet afgedrukte samenstel direct erboven.
Remarks: aanvullende informatie voor het onderdeelnummer direct erboven.
Substituted by: het nummer direct erboven is vervangen door een ander onderdeelnummer als gevolg van een update of herziening.
Qty - Hoeveelheid: geeft het aantal onderdelen aan met betrekking tot met het overeenkomstige referentienummer. "AR" betekent "As required": de hoeveelheid of het aantal moet nader worden bepaald.
Name - Naam van het onderdeel: vertalingen van de Engelse benamingen zijn te vinden in het document "Glossary of part names".
Validity - Bepaalt het tijdsframe en type/versie van de machines waarvoor het onderdeel geldig is. Verklaring van de codes die in het geldigheidspatroon zijn gebruikt, vindt u in de legenda onder aan de pagina. Een geldigheidspatroon vermeld in de titel van het hoofdstuk is van toepassing op het hele hoofdstuk. Een plusteken in het patroon staat voor 'en' en een komma voor 'of'. Haakjes groeperen de geldigheidscodes, vergelijkbaar met die in de wiskunde, zie het volgende voorbeeld:
"PRESS:8 BAR + (FREQ:50HZ+MOVOL:500V, FREQ:60HZ+MOVOL:575V)" is geldig voor machines met een werkdruk van 8 bar, 50Hz-frequentie en 500V-voedingsspanning of een werkdruk van 8 bar, 60Hz-frequentie en 575V-voedingsspanning.
EL – Referentie van de tekening of het onderdeel in de elektrische aansluitkast.
R. - Opmerkingen: extra informatie over het onderdeel. Uitleg vindt u onder aan de pagina.

NO - Norsk

1 BESTILLE DELER
Spesifiser alltid delenummeret, navnet og antallet til den nødvendige artikkelen, samt typen og serienummeret til maskinen.

2 KOLONNEINFORMASJON
Ref – Referansenummer: knytter en spesifikk del fra listen til tegningen. Kun delene med et referansenummer vises i tegningen. Delene i tegningen som vises uten et referansenummer, er kun tatt med for å illustrere monteringen.
Part number – Delenummer skal brukes ved bestilling av reservedeler.
Når det er ikke er spesifisert et delenummer, er ikke komponenten tilgjengelig som en reservedel.
Deler som inngår i et sett, har settnummeret nevnt på linjen nedenfor. Du finner fullstendig oversikt over innholdet i settet i kapittel 1 – Service kits.
Et delenummer med en svart prikk foran er en del av settet rett ovenfor.
Remarks: ytterligere informasjon om delenummeret rett ovenfor.
Substituted by: Delenummeret rett ovenfor har blitt erstattet av et annet delenummeret på grunn av en oppdatering eller revisjon.
Qty – Antall: angir antall deler av det tilhørende referansenummeret. AR betyr Etter behov: Antallet er ikke bestemt.
Name – Delenavn: Du finner oversettelser av de engelske navnene i dokumentet «Glossary of part names».
Validity – Definerer tidsrommet og maskintypen/-versjonen som delen er gyldig for. Du finner en oversikt over kodene som brukes i gyldighetsmønsteret, i forklaringen nederst på siden. Et gyldighetsmønster som nevnes i kapitteltittelen, gjelder for hele kapittelet. Et pluss-tegn i mønsteret skal tolkes som "og", mens et komma skal tolkes som "eller". Parenteser deler inn gyldighetskodene, omtrent på samme måte som matematiske parenteser. Se følgende eksempel:
"PRESS:8BAR + (FREQ:50HZ+MOVOL:500V , FREQ:60HZ+MOVOL:575V)" er gyldig for maskiner med arbeidstrykk på 8 bar, frekvens på 50 Hz og forsyningsspenning på 500 V; eller arbeidstrykk på 8 bar, frekvens på 60 Hz og forsyningsspenning på 575V.
EL – Referanse til tegningen eller komponentene inne i koplingsskapet.
R. – Kommentarer: Ekstra informasjon om delen. Du finner en forklaring nederst på siden.

PL - Polski

1 ZAMAWIANIE CZĘŚCI
Podczas zamawiania produktów należy zawsze podawać następujące informacje: numer części, nazwę i liczbę produktów, a także typ i numer seryjny urządzenia.

2 OBJAŚNIENIE NAZW KOLUMN
Ref. — numer referencyjny: informuje, na którym rysunku można znaleźć konkretną część z listy. Na rysunku zamieszczone są wyłącznie części opatrzone numerem referencyjnym. Części bez przypisanego numeru referencyjnego zostały zamieszczone na rysunku wyłącznie w celu prawidłowego zilustrowania montażu.
Part number — numer części stosowany podczas zamawiania części zamiennych.
W przypadku braku numeru części danej pozycji nie można zamówić jako części zamiennej.
Jeśli dana część jest elementem zestawu, w kolejnym wierszu znajduje się numer zestawu. Informacje na temat pełnej zawartości zestawu można znaleźć w rozdziale „1 – Service kits”.
Jeśli numer części poprzedza czarna kropka, dana część jest elementem zestawu opisanego powyżej.
Remarks: dodatkowe informacje na temat numeru części zamieszczonego powyżej.
Substituted by: numer części zamieszczony powyżej został zastąpiony innym numerem części na skutek modernizacji lub aktualizacji.
Qty — ilość: oznacza liczbę części w odniesieniu do danego numeru referencyjnego. Symbol „AR” oznacza „zależnie od wymagań”: liczba lub numer do ustalenia.
Name — nazwa części: tłumaczenia nazw angielskich znajdują się w dokumencie „Glossary of part names”.
Validity — wskazuje ramy czasowe oraz typ/wersję urządzenia, do którego przeznaczona jest część. Kody wykorzystywane we wzorze przydatności zostały objaśnione w legendzie u dołu strony. Wzór przydatności wspomniany w tytule rozdziału dotyczy całego rozdziału. Znak dodawania we wzorze należy interpretować jako słowo „i”, natomiast przecinek — jako słowo „lub”. Nawiasy pełnią tu funkcję podobną do nawiasów w matematyce — grupują kody przydatności — jak w poniższym przykładzie:
kod „PRESS:8BAR + (FREQ:50HZ+MOVOL:500V , FREQ:60HZ+MOVOL:575V)” dotyczy maszyn o ciśnieniu roboczym 8 bar, częstotliwości 50 Hz i napięciu zasilania 500 V lub o ciśnieniu roboczym 8 bar, częstotliwości 60 HZ i napięciu zasilania 575 V.
EL — odnośnik do rysunku lub podzespołu wewnątrz szafki rozdzielczej.
R. — uwagi: dodatkowe informacje na temat części. Wyjaśnienie znajduje się u dołu strony.

PT - Português

1 ENCOMENDA DE PEÇAS
Especifique sempre a referência da peça, o nome e a quantidade de itens pretendidos, bem como o tipo e o número de série da máquina.

2 INFORMAÇÕES DAS COLUNAS
Ref - Número de referência: associa uma peça específica da lista ao desenho. Neste último, são apresentadas apenas as peças com um número de referência. As peças apresentadas no desenho sem um número de referência destinam-se simplesmente a ilustrar o processo de montagem.
Part number - Referência da peça a utilizar no caso de encomenda de peças sobresselentes.
Se não for especificada uma referência da peça, significa que o componente não se encontra disponível como uma peça sobresselente.
As peças incluídas num kit terão o número do kit mencionado na linha abaixo. Para obter informações sobre o conteúdo completo do kit, consulte o capítulo "1 – Service kits".
Uma referência da peça precedida de um ponto preto está incluída no processo de montagem imediatamente acima mencionado.
Remarks: encontra informações adicionais sobre a referência da peça imediatamente acima.
Substituted by: a referência da peça imediatamente acima foi substituída por outra referência devido a uma actualização ou revisão.
Qty - Quantidade: indica o número de peças em relação ao número de referência correspondente. "AR" (As required) significa "Como exigido": quantidade ou número a determinar.
Name - Nome da peça: encontra as traduções dos nomes em inglês no documento "Glossary of part names".
Validity - Define o período de tempo e o tipo/versão de máquinas para que a peça é válida. Encontra a explicação sobre os códigos utilizados no padrão de validade na legenda situada no final da página. Um padrão de validade mencionado no título do capítulo aplica-se a todo o capítulo. Um sinal de adição no padrão deve ser interpretado como "e", ao passo que uma vírgula deve ser interpretada como "ou". Os parênteses agrupam os códigos de validade, da mesma forma que os parênteses utilizados em operações matemáticas; veja o seguinte exemplo:
"PRESS:8BAR + (FREQ:50HZ+MOVOL:500V , FREQ:60HZ+MOVOL:575V)" é válido para máquinas com uma pressão de trabalho de 8 bar, uma frequência de 50 Hz e uma tensão de alimentação de 500 V ou uma pressão de trabalho de 8 bar, uma frequência de 60 Hz e uma tensão de alimentação de 575 V.
EL – Referência ao desenho ou ao componente dentro do compartimento eléctrico.
R. – Observações: informações adicionais sobre a peça. Encontra a explicação no final da página.

RO - român

1 COMANDAREA PIESELOR
Indicaţi întotdeauna numărul de catalog, numele şi cantitatea articolelor solicitate, precum şi tipul şi numărul de serie al maşinii.

2 INFORMAŢIILE DIN COLOANE
Ref. - Numărul de referinţă: face legătura între o piesă din listă şi una din schemă. Numai piesele care au un număr de referinţă apar în schemă. Piesele din schemă care nu au un număr de referinţă sunt incluse doar pentru a clarifica modul de asamblare.
Part number - Numărul de catalog este utilizat pentru comandarea pieselor de schimb.
Atunci când nu este specificat un număr de catalog, componenta nu este disponibilă ca piesă de schimb.
Pentru piesele incluse în kituri, numărul kitului este menţionat pe rândul următor. Pentru conţinutul complet al kitului, consultaţi capitolul „1 – Service kits”.
Un număr de catalog precedat de un punct negru este inclus în ansamblul aflat chiar deasupra acestuia.
Remarks: Informaţii suplimentare privind numărul de catalog de mai sus.
Substituted by: Numărul de catalog de mai sus a fost înlocuit de un alt număr de catalog din cauza unei actualizări sau a unei revizuiri.
Qty - Cantitate: indică numărul de piese care au numărul de referinţă corespunzător. „AR” este abrevierea pentru „As required”: cantitatea şi numărul vor fi determinate conform necesităţilor.
Name - Numele piesei: traducerile numelor din engleză se află în documentul „Glossary of part names”.
Validity - Defineşte perioada de valabilitate şi tipul/versiunea utilajelor cu care piesa este compatibilă. Clarificarea codurilor utilizate în modelul de valabilitate poate fi găsită în legenda din partea de jos a paginii. Un model de valabilitate menţionat în titlul unui capitol se aplică întregului capitol. Un semn plus care apare într-un model va fi interpretat drept „şi”, virgulă ori „sau”. Codurile de valabilitate sunt grupate cu ajutorul unor paranteze având o funcţie similară parantezelor matematice, a se vedea exemplul de mai jos:
„PRESS:8BAR + (FREQ:50HZ+MOVOL:500V , FREQ:60HZ+MOVOL:575V)” indică valabilitatea pentru utilajele cu presiune de lucru de 8 bari, frecvenţă de 50 Hz şi tensiune de alimentare de 500 V sau presiune de lucru de 8 bari, frecvenţă de 60 Hz şi tensiune de alimentare de 575 V.
EL – Referire la schemă sau la componenta din cofretul electric.
R. – Observaţii: informaţii suplimentare privind piesa. Explicaţiile pot fi găsite în partea de jos a paginii.

RU - русский

1 ЗАКАЗ ДЕТАЛЕЙ
Всегда указывайте номер по каталогу, наименование и количество требуемых позиций, а также тип и серийный номер машины.

2 ИНФОРМАЦИЯ
Ref - Ссылочный номер: соотносит деталь из списка со схемой. На схеме показаны только детали со ссылочным номером. Детали без ссылочного номера приведены на схемах только для демонстрации всего узла в сборе.
Part number - Номер детали, указываемый при заказе запасных частей.
Если номер детали не указан, то компонент недоступен в качестве отдельной запасной части.
Для деталей, входящих в состав комплекта, будут приведены номера этих комплектов, упомянутых строчкой ниже. Чтобы узнать полный состав комплекта см. раздел “1 – Service kits”.
Деталь, перед номером которой стоит черная точка, входит в состав изображенного выше узла.
Remarks: дополнительная информация о номере приведенной выше детали.
Substituted by: номер изображенной выше детали был заменен другим номером по причине обновления или переработки.
Qty - Количество: указывает количество деталей относительно соответствующего ссылочного номера. „AR“ значит „As required“: количество или номер будут определены.
Name - Наименование детали: перевод англоязычных наименований можно найти в документе “Glossary of part names”(Словарь наименований деталей).
Validity - Определяет временные рамки и тип/версию машины, в которой используется деталь. Пояснение кодов, используемых в данной графе, можно найти в списке обозначений внизу страницы. Информация о совместимости, упомянутая в данной главе, актуальна для всей главы. Знак плюса в примечании о совместимости следует принимать за ‘и’, запятые — за ‘или’. Скобки группируют коды совместимости по принципу, схожему с математическим. См. пример:
‘PRESS:8BAR + (FREQ:50HZ+MOVOL:500V , FREQ:60HZ+MOVOL:575V)’ применима в машинах с рабочим давлением 8 бар, частотой 50 Гц и напряжением источника питания 500 В или рабочим давлением 8 бар, частотой 60 Гц и напряжением источника питания 575 В.
EL – Ссылка на схему или компонент электрического шкафа.
R. – Примечания: дополнительная информация о детали. Пояснения приведены внизу страницы.

SK - slovenský

1 OBJEDNÁVANIE DIELOV
Vždy uveďte číslo dielu, názov a množstvo požadovaných položiek, ako aj typ a výrobné číslo zariadenia.

2 INFORMÁCIE V STĹPCOCH
Ref – Referenčné číslo: spája konkrétny diel v zozname s nákresom. Na nákrese sú zobrazené len diely s referenčným číslom. Diely v nákrese bez referenčného čísla slúžia len na znázornenie zostavy.
Part number – Číslo dielu, ktoré treba použiť pri objednávaní náhradných dielov.
Ak nie je uvedené žiadne číslo dielu, daný komponent nie je k dispozícii ako náhradný diel.
Diely, ktoré sú súčasťou súpravy, majú v riadku nižšie uvedené číslo súpravy. Zoznam všetkých dielov v súprave nájdete v kapitole „1 – Service kits“.
Číslo dielu, pred ktorým sa nachádza čierna bodka, je súčasťou zostavy uvedenej nad ním.
Remarks: Ďalšie informácie o čísle dielu vyššie.
Substituded by: Číslo dielu uvedené vyššie bolo nahradené iným dielom kvôli inovácii alebo revízii.
Qty – Množstvo: Indikuje počet dielov v súvislosti s príslušným referenčným číslom. „AR“ znamená „As required“: množstvo alebo počet sa musí určiť.
Name – Názov dielu: Preklady anglických názvov nájdete v dokumente „Glossary of part names“(Slovník názvov dielov).
Validity – Definuje časový rámec a typ/verziu zariadení, pre ktoré možno daný diel použiť. Informácie o význame kódov použitých v reťazci označujúcom platnosť nájdete v legende v spodnej časti strany. Reťazec označujúci platnosť uvedený v názve kapitoly sa vzťahuje na celú kapitolu. Znamienko plus v tomto reťazci znamená „a“ a čiarka znamená „alebo“. Zátvorky slúžia na zoskupenie kódov označujúcich platnosť podobne ako v matematických vzorcoch. Pozrite si nasledujúci príklad:
„PRESS:8BAR + (FREQ:50HZ+MOVOL:500V , FREQ:60HZ+MOVOL:575V)“ – platí pre zariadenia s pracovným tlakom 8 barov, frekvenciou 50 Hz a napájacím napätím 500 V alebo pracovným tlakom 8 barov, frekvenciou 60 Hz a napájacím napätím 575 V.
EL – Odkaz na nákres komponentu v elektrickej skrini.
R. – Poznámky: Ďalšie informácie o danom diele. Vysvetlenie nájdete v spodnej časti stránky.

SL - slovenščina

1 NAROČANJE DELOV
Vedno navedite številko dela, ime in količino zahtevanih predmetov ter tip in serijsko številko stroja.

2 INFORMACIJE O STOLPCU
Ref - Referenčna številka: povezuje določen navedeni del z risbo. Na risbi so prikazani samo deli z referenčno številko. Deli na risbi, ki nimajo referenčne številke, so namenjeni samo prikazu sklopa.
Part number - Številko dela uporabite pri naročanju nadomestnih delov.
- Če številka dela ni navedena, komponenta ni na voljo kot nadomestni del.
Za dele, ki so del kompleta, bo v spodnji vrstici navedena tudi številka kompleta. Celotno vsebino kompleta si oglejte v poglavju "1 – Service kits".
Številka dela, pred katero je črna pika, spada v sklop tik zgoraj.
Remarks: dodatne informacije o številki dela tik zgoraj.
Substituted by: številka dela tik zgoraj je zamenjana z drugo številko dela, zaradi posodobitve ali revizije.
Qty Količina: določa število delov v povezavi z ustrezno referenčno številko. Kratica "AR" pomeni "As required" (kot je zahtevano): količina ali število za določitev.
Name - Ime dela: prevodi angleških imen se nahajajo v dokumentu "Glossary of part names".
Validity - Določa časovni razpon in tip/različico stroja, ki veljata za del. Razlago kod, ki se uporabljajo v vzorcu veljavnosti, najdete v legendi na dnu strani. Vzorec veljavnosti, ki je naveden v naslovu poglavja, velja za celotno poglavje. Znak plus v vzorcu lahko pomeni besedo "in", vejico ali besedo "ali". Oklepaji združujejo kode veljavnosti, podobno kot oklepaji pri matematiki; glejte spodnji primer:
"PRESS:8BAR + (FREQ:50HZ+MOVOL:500V , FREQ:60HZ+MOVOL:575V)" velja za stroje z delovnim tlakom 8 barov in frekvenco 50 Hz ter napajalno napetostjo 500 V, ali z delovnim tlakom 8 barov, frekvenco 60 Hz in napajalno napetostjo 575 V.
EL – Referenca za risbo ali komponenta znotraj električne omarice.
R. – Opombe: dodatne informacije o delu. Razlago lahko najdete na dnu strani.

SV - Svenska

1 BESTÄLLA DELAR
Ange alltid reservdelsnummer, namn och antal delar som önskas, samt typbeteckning och tillverkningsnummer på maskinen.

2 SPALTINFORMATION
Ref. – Referensnummer: kopplar ihop en viss reservdel i förteckningen med ritningen. Endast reservdelar med referensnummer visas i ritningen. Reservdelar som saknar referensnummer i ritningen finns med för att illustrera själva monteringen.
Part number – Reservdelsnummer som används vid beställning av reservdelar.
Om reservdelsnummer saknas finns komponenten inte som reservdel.
Delar som tillhör en sats har satsnumret angivet på raden nedanför. Se kapitel ”1 – Service kits” för satsens kompletta innehåll.
Ett reservdelsnummer som föregås av en svart punkt finns med i enheten direkt ovanför.
Remarks: Ytterligare information om reservdelsnumret direkt ovanför.
Substituted by: Reservdelsnumret direkt ovanför har ersatts med ett annat reservdelsnummer på grund av en uppdatering eller revision.
Qty – Antal: Anger hur många delar som är kopplade till motsvarande referensnummer. "AR" betyder "As required" (som erfordras): Antal eller nummer bestäms senare.
Name - Reservdelsbeteckningar: Översättningar av de engelska beteckningarna återfinns i dokumentet "Glossary of part names" (Ordlista med reservdelsbeteckningar).
Validity – Definierar tidsramen och typ/version av maskin som reservdelen passar för. En förklaring av koderna som används i giltighetsmönstret finns i symbolförklaringen längst ner på sidan. Ett giltighetsmönster som nämns i ett kapitel gäller för hela kapitlet. Ett plustecken i mönstret ska tolkas som "och" och ett komma som "eller". Parenteser grupperar giltighetskoderna i likhet med parenteser inom matematiken. Se följande exempel:
"PRESS:8BAR + (FREQ:50HZ+MOVOL:500V , FREQ:60HZ+MOVOL:575V)" gäller maskiner med 8 bar arbetstryck, 50 Hz frekvens och 500 V matningsspänning, eller 8 bar arbetstryck, 60 Hz frekvens och 575 V matningsspänning.
EL – Referens till ritningen eller komponenten inuti elskåpet.
R. – Anmärkningar: Extra information om reservdelen. En förklaring finns längst ner på sidan.

TR - Türk

1 PARÇA SİPARİŞİ
Her zaman gereken parçaların parça numarası, adı ve miktarının yanı sıra makinenin tipini ve seri numarasını da belirtin.

2 SÜTUN BİLGİLERİ
Ref - Referans numarası: Listenin belirli bir bölümünü çizime bağlar. Yalnızca referans numarası olan parçalar çizimde gösterilir. Çizimde referans numarası olmayan parçalar yalnızca mekanizmanın tamamını göstermek için konulmuştur.
Part number - Yedek parça siparişi verirken kullanılacak parça numarası.
Parça numarası belirtilmediğinde, bu bileşen bir yedek parça olarak bulunmaz.
Bir kite dahil olan parçalar, alttaki satırda bulunan kit numarasına sahiptir. Kitin tüm içeriğini görmek için bkz. bölüm "1 – Service kits".
Önünde siyah nokta olan parça numaraları, hemen yukarıdaki mekanizmada bulunur.
Remarks: Hemen yukarıdaki parça numarası ile ilgili ek bilgiler.
Substituted by: Bir güncelleme veya revizyon nedeniyle hemen yukarıdaki parça numarası yerine başka bir parça numarası gelmiştir.
Qty - Miktar: İlgili referans numarasıyla ilgili parça sayısını gösterir. "AR" kısaltması "As required" (miktarı veya sayısı belirlenecek) anlamına gelir.
Name - Parça adı: İngilizce adların tercümeleri "Glossary of part names"(Parça adları sözlüğü) adlı belgede bulunabilir.
Validity - Parçanın geçerli olduğu zaman aralığını ve makine tiplerini/modellerini belirler. Geçerlilik düzeninde kullanılan kodların açıklamaları sayfanın alt kısmında bulunabilir. Bölüm başlığında bahsedilen bir geçerlilik düzeni, tüm bölüm için geçerlidir. Düzende bir artı işareti olması "ve", virgül işareti olması "veya" olarak anlaşılabilir. Geçerlilik kodları, matematikte kullanılan parantezlere benzer şekilde, parantezler ile gruplara ayrılır. Aşağıdaki örneğe bakabilirsiniz:
"PRESS:8BAR + (FREQ:50HZ+MOVOL:500V , FREQ:60HZ+MOVOL:575V)" düzeni 8 bar çalışma basıncı olan, 50 Hz frekanslı, 500 V besleme gerilimli makineler veya 8 bar çalışma basıncı, 60 Hz frekanslı ve 575 V besleme gerilimli makineler için geçerlidir.
EL – Elektrik panosu içindeki çizim veya parçaya referans anlamına gelir.
R. – Notlar: Parça hakkında ek bilgiler. Açıklamalar sayfanın alt kısmında bulunabilir.

ZH - 中国的

1 ##零件
#必###明所需物件的零件号、名称和数量，以及机器的#型和 序列号。

2 #信息
Ref - 参考#号：将列表中的具体零件与##相##。##中##示具有参考#号的零件。##中不#参考#号的零件只用于#明#成##。
Part number - ###件#需要使用零件号。
如果不###明零件号#，将无法以#件形式提供部件。
套件中包含的零件将具有下行所提的套件#号。有#套件的完整信息，#参#第 1 章 – Service kits 保#套件。
上方的#成中包含了零件号，零件号前加有#点符号。
Remarks (#注)：上方零件号的##信息。
Substituted by (取代)：上方的零件号因更新或版本原因更##其他零件号。
Qty - 数量：表示与##参考#号相#的零件数量。"AR" 表示"根据需要"：数量或数目待#定。
Name - 零件名称："Glossary of names"(零件名称##)文#中提供了英文名称的##翻#。
Validity - 定##零件#用的##期限以及机器的#型/版本。本#底部的#例#有#性表#式中使用的代##行了#明。章###中提及的有#性表#式#用于全部章#。表#式中的加号表示"和"，逗号表示"或"。#括号用于#合有#代#，#似于数学括号，参#以下示例：'PRESS:8BAR + (FREQ:50HZ+MOVOL:500V , FREQ:60HZ+MOVOL:575V)' #用于以下机器：工作#力 8 bar，#率 50 Hz，#源## 500 V；或工作#力 8 bar，#率 60 Hz，#源## 575 V。
EL –参考##或##内部#件。
R.– #注：有#零件的#充信息。本#底部提供相##明。

2901 9901 01 - PREVENTIVE MAINTENANCE KIT - GA 75L VSD+

MODEL:GA75VP_16

	Qty	Name
•	1	AIR FILTER KIT C142 GA75VSD+
•	1	OIL FILTER KIT C142VSD+
•	1	OSE/SCAVENGE LINE KIT C142VSD+
•	1	KIT VALVE MINIMUM PRESSURE

2901 9901 02 - PREVENTIVE MAINTENANCE KIT - GA 90 VSD+, GA 110 VSD+

MODEL:GA110VP_16 , MODEL:GA90VP_16

	Qty	Name
•	1	AIR FILTER KIT C142 GA90/110VS
•	1	OIL FILTER KIT C142VSD+
•	1	OSE/SCAVENGE LINE KIT C142VSD+
•	1	KIT VALVE MINIMUM PRESSURE

2901 9900 95 - AIR FILTER KIT - GA 75L VSD+

MODEL:GA75VP_16

	Qty	Name
•	1	FILTER ELEMENT 21M3/MIN
•	4	AIR INLET W/O FILTER 114X17
•	1	FILTER AIR

2901 9900 96 - AIR FILTER KIT - GA 90 VSD+, GA 110 VSD+

MODEL:GA110VP_16 , MODEL:GA90VP_16

	Qty	Name
•	1	PACKED FILTER ELEMENT
•	4	AIR INLET W/O FILTER 114X17
•	1	FILTER AIR

2901 9900 97 - OIL FILTER KIT

	Qty	Name
•	2	FILTER OIL
•	1	O-RING
•	1	PLUG

2901 9900 98 - OSE/SCAVENGE LINE KIT

	Qty	Name
•	1	O-RING
•	1	NON RETURN VALVE
•	1	O-RING
•	1	O-RING
•	1	O-RING
•	1	O-RING
•	1	SEPARATOR ELEMENT

2901 1453 00 - MINIMUM PRESSURE VALVE KIT

	Qty	Name
•	1	RETAINING RING
•	1	O-RING 40X2
•	1	O-RING 106X3
•	1	O-RING 13.3X2.4
•	1	O-RING
•	1	WASHER
•	1	SPRING

continues on next page ...

... continued from previous page

2901 1453 00 - MINIMUM PRESSURE VALVE KIT

	Qty	Name
•	1	SPRING
•	1	TUBE GREASE
•	1	KIT VALVE MINIMUM PRESSURE WOR
•	1	INSTR. MIN PRESSURE VALVE
•	1	O-RING 69.5X3

2901 9900 99 - INLET VALVE KIT

	Qty	Name
•	1	O-RING
•	1	INLET VALVE
•	1	SPRING
•	1	HEX. HEAD SCREW M6 X 20
•	1	VALVE SPINDLE
•	1	BRACKET
•	1	WASHER
•	1	SCREW SET

2901 9901 03 - MOTOR OVERHAUL KIT

	Qty	Name
•	2	O-RING 69.5 X 3
•	1	KEY PARALLEL
•	2	O-RING
•	2	O-RING
•	1	LOCK NUT M12
•	3	O-RING
•	1	O-RING
•	8	LOCK NUT M16
•	1	O-RING
•	1	BEARING BALL
•	1	WAVED WASHER
•	1	O-RING
•	1	O-RING
•	1	FITTING PIPE THREADED ELBOW 90
•	1	O-RING
•	4	BUFFER

2901 1616 00 - THERMOSTATIC VALVE KIT 40DEGREE C

	Qty	Name
•	1	THERMOSTATIC VALVE 38DEGREES
•	1	O-RING
•	1	O-RING 35.1 X 1.6
•	1	SET INSTRUCTIONS

2901 1617 00 - THERMOSTATIC VALVE KIT 60DEGREE C

	Qty	Name
•	1	THERMOSTATIC VALVE 60 DEGREES
•	1	O-RING
•	1	O-RING 35.1 X 1.6
•	1	SET INSTRUCTIONS

2901 1618 00 - THERMOSTATIC VALVE KIT 75DEGREE C

	Qty	Name
•	1	VALVE 75 DEGREES C
•	1	O-RING
•	1	O-RING 35.1 X 1.6
•	1	SET INSTRUCTIONS

Legend:

MODEL:GA110VP_16 - Model:GA 110VSD+ MODEL:GA75VP_16 - Model:GA 75VSD+ MODEL:GA90VP_16 - Model:GA 90VSD+

Ref	Part Number	Qty	Name	Validity
	1630 2041 05	1	OIL RS ULTRA 5L	
	1630 2041 20	1	OIL RS ULTRA 20L	
	1630 2041 29	1	OIL RS ULTRA 209L	
	2901 1700 00	1	OIL RXD 5L	
	2901 1701 00	1	OIL RXD 20L	
	2901 1702 00	1	OIL RXD 209L	
	1630 0833 00	1	OIL ROTO-FOODGRADE 5L	
	1630 0542 00	1	OIL ROTO-FOODGRADE 20L	

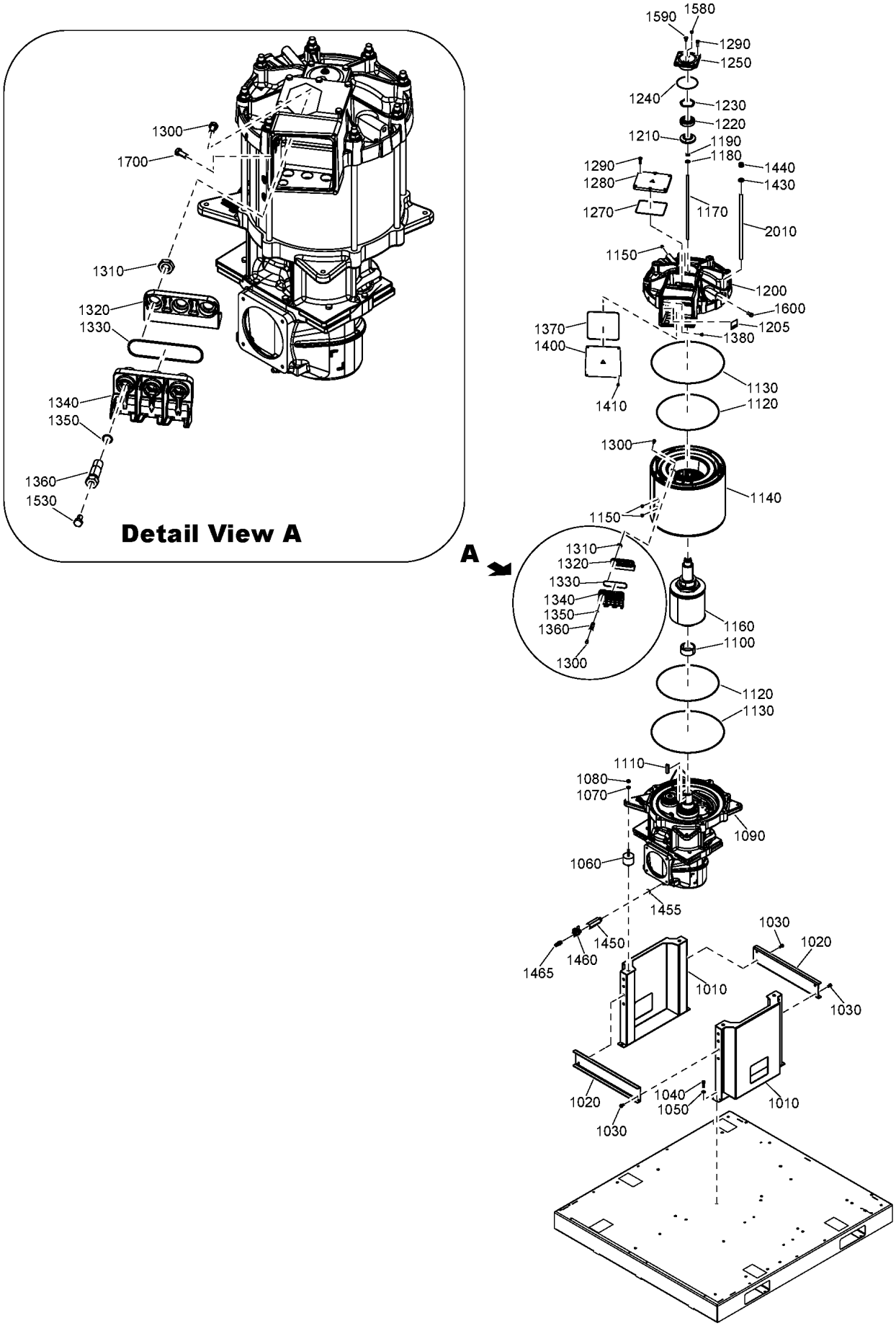
1300
1700
1310
1320
1330
1340
1350
1360
1530
Detail View A
A
1590
1580
1290
1250
1240
1230
1220
1210
1190
1180
1440
1430
1290
1280
1270
1170
2010
1150
1200
1600
1205
1380
1370
1400
1410
1130
1120
1300
1140
1150
1310
1320
1330
1340
1350
1360
1300
1160
1100
1120
1130
1110
1080
1070
1090
1060
1455
1450
1460
1465
1030
1020
1010
1030
1020
1040
1050
1010
1030

Ref	Part Number	Qty	Name	Validity
	8092 3759 09	1	DRIVE SET GA 75L VSD+	MODEL:GA75VP_16
	8092 3759 17	1	DRIVE SET GA 90 VSD+	MODEL:GA90VP_16
	8092 3759 25	1	DRIVE SET GA 110 VSD+	MODEL:GA110VP_16
1010	~~1649 8001 71~~	2	MOTOR SUPPORT	**(02/03/2017 - 02/01/2019)**
	Substituted by:	1649 8004 34 - MOTOR SUPPORT BIG (quantity: 1)		
1010	1649 8004 34	2	MOTOR SUPPORT	**(03/01/2019 - ...)**
1020	1649 8001 72	2	MOTOR SUPPORT	**(02/03/2017 - ...)**
1030	0147 1963 08	8	SCREW	**(02/03/2017 - ...)**
1040	0211 1363 03	4	SCREW	**(02/03/2017 - ...)**
1050	0301 2344 00	4	PLAIN WASHER	**(02/03/2017 - ...)**
1060		4	BUFFER	**(02/03/2017 - ...)**
	Service kits:	2901 9901 03 - MOTOR OVERHAUL KIT		
1070	0301 2344 00	4	PLAIN WASHER	**(02/03/2017 - ...)**
1080	0291 1128 20	4	LOCK NUT	**(02/03/2017 - ...)**
1090	~~1616 8693 83~~	1	ELEMENT	**(06/11/2017 - ...)**
	Substituted by:	1616 8693 93 - ELEMENT C142 M 13 (quantity: 1)		
1090	1649 8003 44	1	ELEMENT	**(02/03/2017 - 05/11/2017)**
1100	1649 8000 63	1	SPACER	**(02/03/2017 - ...)**
1110		1	KEY	**(02/03/2017 - ...)**
	Service kits:	2901 9901 03 - MOTOR OVERHAUL KIT		
1120		1	O-RING	**(02/03/2017 - 18/04/2018)** **(19/04/2018 - ...)** MODEL:GA90VP_16
	Service kits:	2901 9901 03 - MOTOR OVERHAUL KIT		
1120	0663 2120 91	1	O-RING	**(19/04/2018 - ...)** MODEL:GA110VP_16 , MODEL:GA75VP_16
1130		1	O-RING	**(02/03/2017 - 18/04/2018)** **(19/04/2018 - ...)** MODEL:GA90VP_16
	Service kits:	2901 9901 03 - MOTOR OVERHAUL KIT		
1130	0663 2120 90	1	O-RING	**(19/04/2018 - ...)** MODEL:GA110VP_16 , MODEL:GA75VP_16
1140	~~1649 8000 56~~	1	STATOR	**(02/03/2017 - 13/05/2018)** MODEL:GA90VP_16 **(25/09/2018 - 21/11/2019)** MODEL:GA90VP_16
	Substituted by:	1649 8000 93 - STATOR 90KW (quantity: 1)		
1140	~~1649 8000 58~~	1	STATOR	**(02/03/2017 - 20/11/2019)** MODEL:GA110VP_16
	Substituted by:	1649 8000 94 - STATOR 110KW (quantity: 1)		
1140	1649 8000 94	1	STATOR	**(21/11/2019 - ...)** MODEL:GA110VP_16
1140	1649 8000 92	1	STATOR	**(20/11/2019 - ...)** MODEL:GA75VP_16
1140	~~1649 8000 54~~	1	STATOR	**(02/03/2017 - 19/11/2019)** MODEL:GA75VP_16
	Substituted by:	1649 8000 92 - STATOR 75KW (quantity: 1)		
1140	1649 8000 93	1	STATOR	**(22/11/2019 - ...)** MODEL:GA90VP_16
1150	0686 3718 14	2	PLUG	**(19/04/2018 - ...)** MODEL:GA110VP_16 , MODEL:GA75VP_16
1150	0686 3718 14	2	PLUG	**(02/03/2017 - 18/04/2018)** **(19/04/2018 - ...)** MODEL:GA90VP_16
1160	1649 8000 60	1	ROTOR	**(02/03/2017 - 13/05/2018)** **(14/05/2018 - 24/09/2018)** MODEL:GA110VP_16 , MODEL:GA75VP_16 **(25/09/2018 - ...)**
1160	1649 8000 81	1	ROTOR	**(14/05/2018 - 24/09/2018)** MODEL:GA90VP_16
1170	1649 8000 49	1	STUD	**(02/03/2017 - ...)**
1180	0301 2358 00	1	PLAIN WASHER	**(02/03/2017 - ...)**
1190		1	LOCKNUT	**(02/03/2017 - ...)**
	Service kits:	2901 9901 03 - MOTOR OVERHAUL KIT		
1200	1649 8000 47	1	HOUSING	**(02/03/2017 - ...)**
1205	1079 9923 72	1	LABEL	**(15/10/2018 - ...)**
1210	1629 0305 49	1	SEAL	**(02/03/2017 - ...)**
1220		1	BEARING	**(02/03/2017 - ...)**
	Service kits:	2901 9901 03 - MOTOR OVERHAUL KIT		
1230	1625 8180 03	1	WAVE SPRING	**(13/07/2017 - ...)**
1240		1	O-RING	**(02/03/2017 - ...)**
	Service kits:	2901 9901 03 - MOTOR OVERHAUL KIT		
1250	1629 0305 44	1	BEARING HOUSING	**(02/03/2017 - ...)**

Legend:

MODEL:GA110VP_16 - Model:GA 110VSD+ MODEL:GA75VP_16 - Model:GA 75VSD+ MODEL:GA90VP_16 - Model:GA 90VSD+

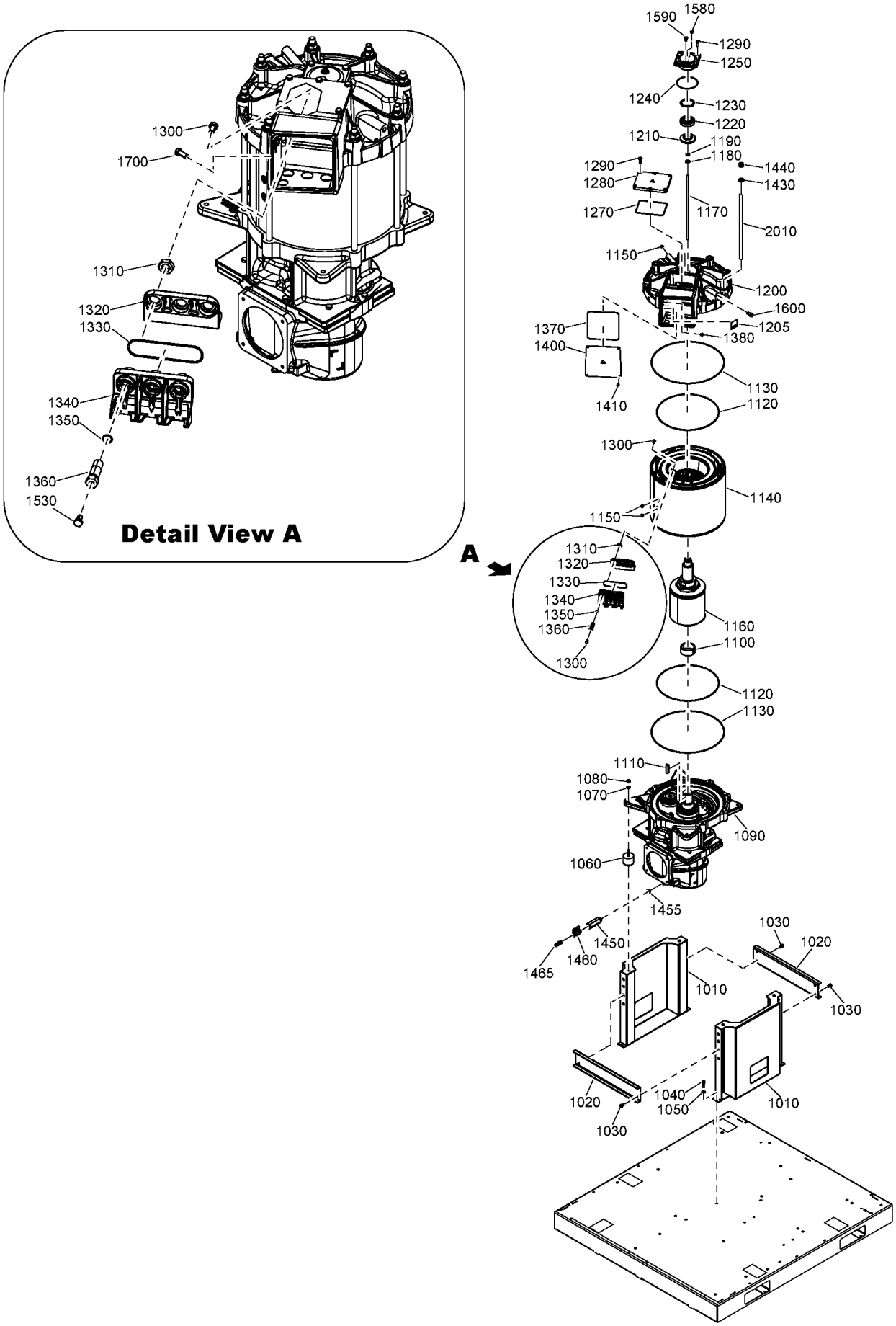
1300
1700
1310
1320
1330
1340
1350
1360
1530
Detail View A
A
1590
1580
1290
1250
1240
1230
1220
1210
1190
1180
1440
1430
1290
1280
1270
1170
2010
1150
1200
1600
1205
1380
1370
1400
1410
1130
1120
1300
1140
1150
1310
1320
1330
1340
1350
1360
1300
1160
1100
1120
1130
1110
1080
1070
1090
1060
1455
1450
1460
1465
1030
1020
1010
1030
1020
1040
1050
1010
1030

Ref	Part Number	Qty	Name	Validity
1270		1	O-RING	(02/03/2017 - ...)
	Service kits:	2901 9901 03 - MOTOR OVERHAUL KIT		
1280	1649 8000 70	1	PLATE ASSEMBLY	(02/03/2017 - ...)
	• 1088 1001 01	1	WARNING MARK	
1290	0211 1363 03	6	SCREW	(19/04/2018 - ...)
1290	0211 1363 03	10	SCREW	(02/03/2017 - 18/04/2018)
1300	0147 1110 76	6	SCREW	(02/03/2017 - 18/04/2018)
1300	0147 1110 76	3	SCREW	(19/04/2018 - ...)
1310	0261 2114 00	3	NUT	(02/03/2017 - ...)
1320	1649 8000 42	1	CONNECTOR	(02/03/2017 - ...)
1330		1	O-RING	(02/03/2017 - ...)
	Service kits:	2901 9901 03 - MOTOR OVERHAUL KIT		
1340	1649 8000 41	1	CONNECTOR	(02/03/2017 - ...)
1350		3	O-RING	(02/03/2017 - ...)
	Service kits:	2901 9901 03 - MOTOR OVERHAUL KIT		
1360	1649 8000 62	3	PIN	(02/03/2017 - ...)
1370		1	O-RING	(02/03/2017 - 01/10/2018)
	Service kits:	2901 9901 03 - MOTOR OVERHAUL KIT		
1380	0147 1319 03	1	HEXAGON BOLT	(02/03/2017 - ...)
1400	1649 8000 71	1	PLATE ASSEMBLY	(02/03/2017 - ...)
	• 1088 1001 01	1	WARNING MARK	
	• 1649 8004 28	1	SEAL	(15/10/2018 - ...)
1410	0147 1246 03	4	HEXAGON BOLT	(02/03/2017 - 11/09/2017)
1410	0211 1246 03	4	SCREW	(12/09/2017 - ...)
1430	0301 2378 00	8	PLAIN WASHER	(02/03/2017 - ...)
1440		8	LOCKNUT	(02/03/2017 - ...)
	Service kits:	2901 9901 03 - MOTOR OVERHAUL KIT		
1450	1649 8003 84	1	NIPPLE	(06/07/2017 - ...)
1455	0663 3125 00	1	O-RING	(28/08/2017 - ...)
1460	0852 0011 51	1	BALL VALVE	(02/03/2017 - ...)
1465	8202 1251 78	1	QUICK COUPLING	(02/02/2017 - ...)
1530	0147 1110 76	3	HEXAGON BOLT	(19/04/2018 - ...)
1580	0686 3718 14	1	PLUG	(19/04/2018 - ...)
1590	1619 6032 00	3	NIPPLE	(19/04/2018 - ...)
1600	0686 3718 14	1	PLUG	(19/04/2018 - ...)
1700	0147 1320 03	1	HEXAGON BOLT	(19/04/2018 - ...)
2010	1649 8000 50	8	STUD	(02/03/2017 - ...)

Legend:

MODEL:GA110VP_16 - Model:GA 110VSD+ MODEL:GA75VP_16 - Model:GA 75VSD+ MODEL:GA90VP_16 - Model:GA 90VSD+

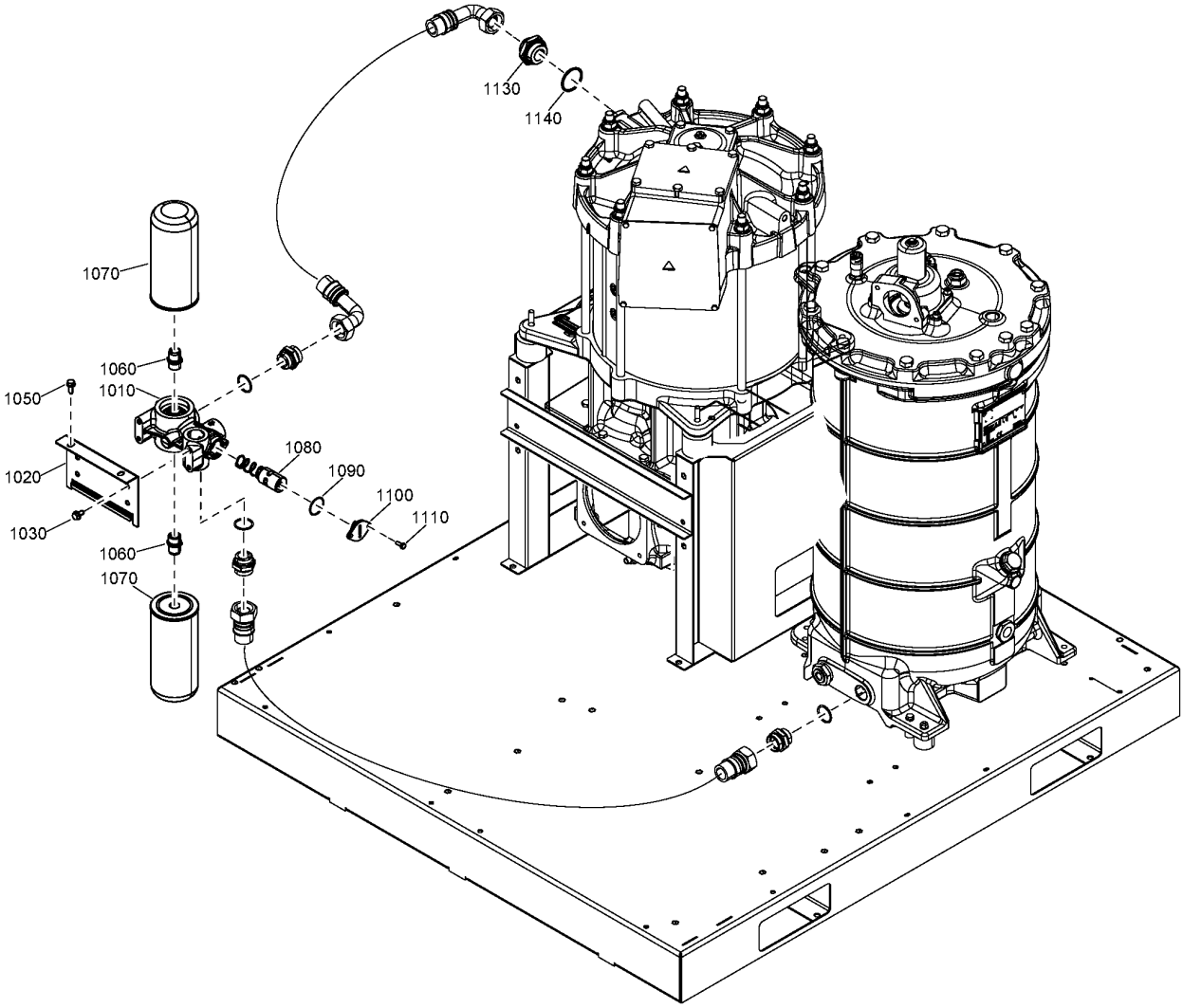
1130
1140
1070
1060
1010
1050
1020
1030
1080
1090
1100
1110
1060
1070

Ref	Part Number	Qty	Name	Validity
1010	1622 9094 21	1	HOUSING FILTER	(02/03/2017 - ...)
1020	1649 8001 75	1	BRACKET	(02/03/2017 - ...)
1030	1079 1472 05	4	HEXAGON BOLT	(05/05/2017 - ...)
1050	0147 1963 08	2	SCREW	(02/03/2017 - ...)
1060	1625 7527 00	2	NIPPLE	(02/03/2017 - ...)
1070		2	OIL FILTER	(02/03/2017 - ...)
	Substituted by:	2903 7526 00 - OIL FILTER SPARE 8000HRS (quantity: 1)		
	Service kits:	2901 9901 02 - PREVENTIVE MAINTENANCE KIT - GA 90 VSD+, GA 110 VSD+ 2901 9901 01 - PREVENTIVE MAINTENANCE KIT - GA 75L VSD+ 2901 9900 97 - OIL FILTER KIT		
1080		1	THERMOSTATIC VALVE	(02/03/2017 - ...)
	Service kits:	2901 1616 00 - THERMOSTATIC VALVE KIT 40DEGREE C		
1090		1	O-RING	(02/03/2017 - ...)
	Service kits:	2901 1616 00 - THERMOSTATIC VALVE KIT 40DEGREE C		
1100	1614 6118 00	1	FLANGE THERMOSTAT	(02/03/2017 - ...)
1110	0211 1246 03	2	SCREW	(02/03/2017 - ...)
1130	1649 8003 39	1	OIL INJECTION NIPPLE	(02/03/2017 - ...)
1140	0663 2105 99	1	O-RING	(02/03/2017 - ...)

Legend:
COOL:AIR - Cooling:Air cooled

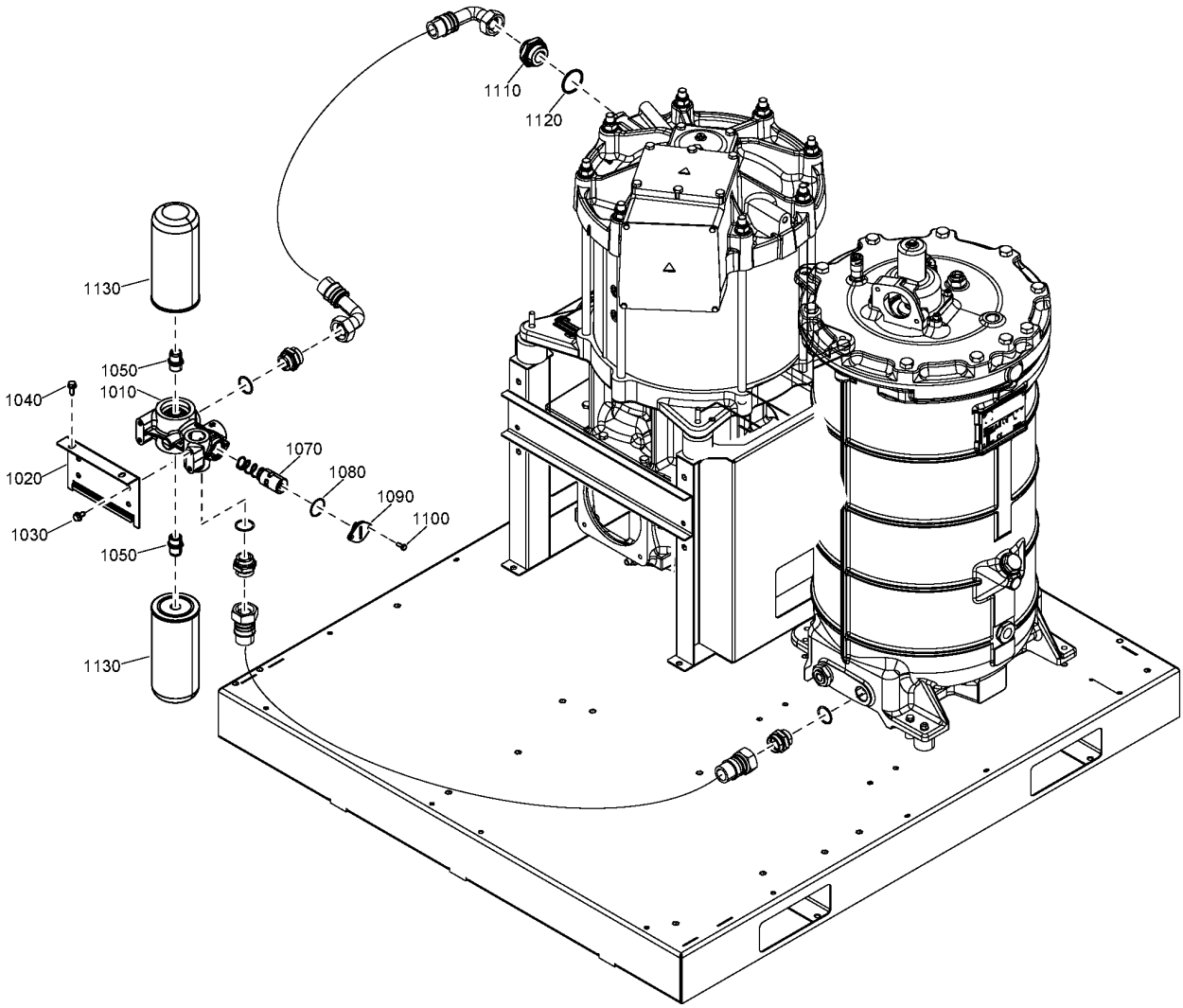
1110
1120
1130
1050
1040
1010
1070
1080
1090
1100
1020
1030
1050
1130

Ref	Part Number	Qty	Name	Validity
1010	1622 9094 21	1	FILTER HOUSING	(21/08/2018 - ...)
1020	1649 8001 75	1	BRACKET	(21/08/2018 - ...)
1030	1079 1472 05	4	HEXAGON BOLT	(21/08/2018 - ...)
1040	0147 1963 08	2	HEXAGON BOLT	(21/08/2018 - ...)
1050	1625 7527 00	2	NIPPLE	(21/08/2018 - ...)
1070		1	THERMOSTATIC VALVE 60°C	(21/08/2018 - ...)
	Service kits:	2901 1617 00 - THERMOSTATIC VALVE KIT 60DEGREE C		
1080		1	O-RING	(21/08/2018 - ...)
	Service kits:	2901 1617 00 - THERMOSTATIC VALVE KIT 60DEGREE C		
1090	1614 6118 00	1	FLANGE THERMOSTAT	(21/08/2018 - ...)
1100	0211 1246 03	2	SCREW	(21/08/2018 - ...)
1110	1649 8003 39	1	OIL INJECTION NIPPLE	(21/08/2018 - ...)
1120	0663 2105 99	1	O-RING	(21/08/2018 - ...)
1130		2	OIL FILTER	(21/08/2018 - ...)
	Substituted by:	2903 7526 00 - OIL FILTER SPARE 8000HRS (quantity: 1)		
	Service kits:	2901 9900 97 - OIL FILTER KIT		
		2901 9901 02 - PREVENTIVE MAINTENANCE KIT - GA 90 VSD+, GA 110 VSD+		
		2901 9901 01 - PREVENTIVE MAINTENANCE KIT - GA 75L VSD+		

Legend:
COOL:WATER - Cooling:Water cooled

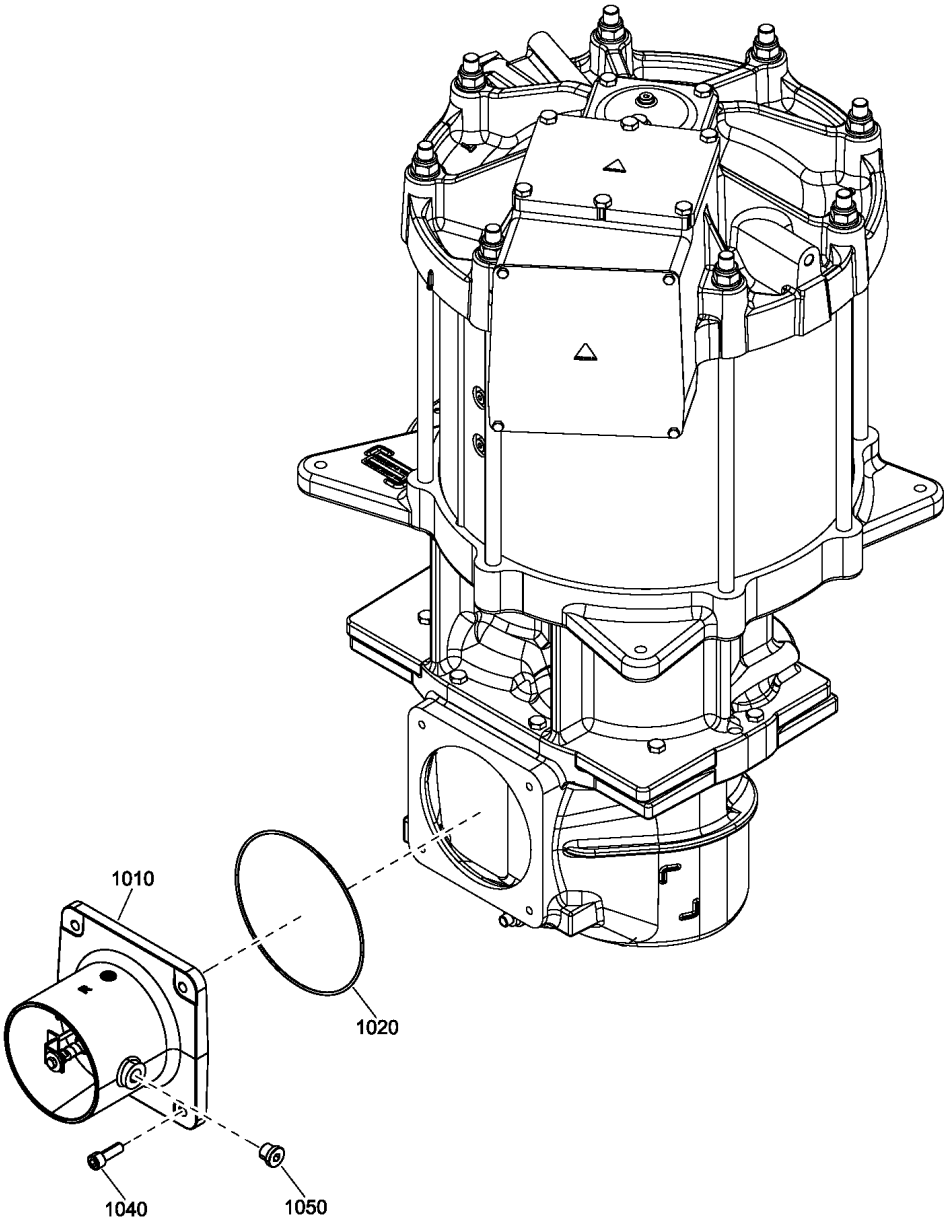
1010
1020
1040
1050

Ref	Part Number	Qty	Name	Validity
1010	1622 8610 83	1	REGULATION VALVE	(21/11/2017 - ...)
1020	0663 2107 37	1	O-RING	(02/03/2017 - ...)
1040	0211 1363 03	4	SCREW	(02/03/2017 - ...)
1050	0686 3718 16	1	PLUG	(02/03/2017 - ...)

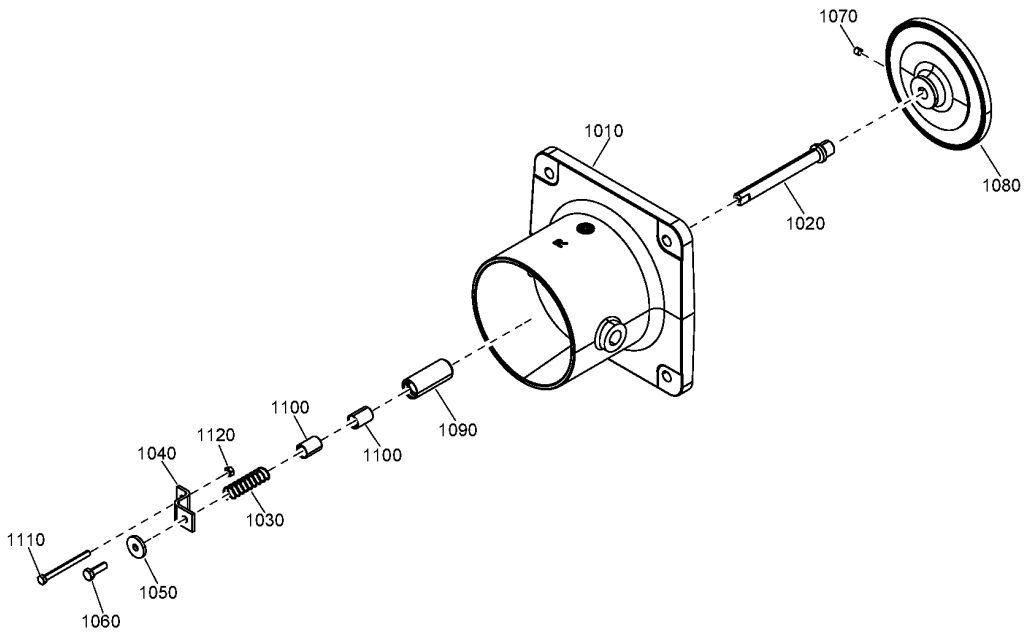
1070
1010
1080
1020
1100
1120
1090
1100
1040
1030
1110
1050
1060

Ref	Part Number	Qty	Name	Validity
	1622 8610 83	1	REGULATION VALVE	(21/11/2017 - ...)
1010	1622 0759 02	1	HOUSING	(21/11/2017 - ...)
1020		1	VALVE SPINDLE	(21/11/2017 - ...)
	Service kits:	2901 9900 99 - INLET VALVE KIT		
1030		1	SPRING	(21/11/2017 - ...)
	Service kits:	2901 9900 99 - INLET VALVE KIT		
1040		1	BRACKET	(21/11/2017 - ...)
	Service kits:	2901 9900 99 - INLET VALVE KIT		
1050		1	WASHER	(21/11/2017 - ...)
	Service kits:	2901 9900 99 - INLET VALVE KIT		
1060		1	SCREW	(21/11/2017 - ...)
	Service kits:	2901 9900 99 - INLET VALVE KIT		
1070		1	SET SCREW	(21/11/2017 - ...)
	Service kits:	2901 9900 99 - INLET VALVE KIT		
1080		1	INLET VALVE	(21/11/2017 - ...)
	Service kits:	2901 9900 99 - INLET VALVE KIT		
1090	1613 7216 00	1	BUSHING	(21/11/2017 - ...)
1100	0500 4510 31	2	PLAIN BEARING	(21/11/2017 - ...)
1110	1613 7217 05	1	BUSHING	(21/11/2017 - ...)
1120	1613 7220 02	1	PIN	(21/11/2017 - ...)

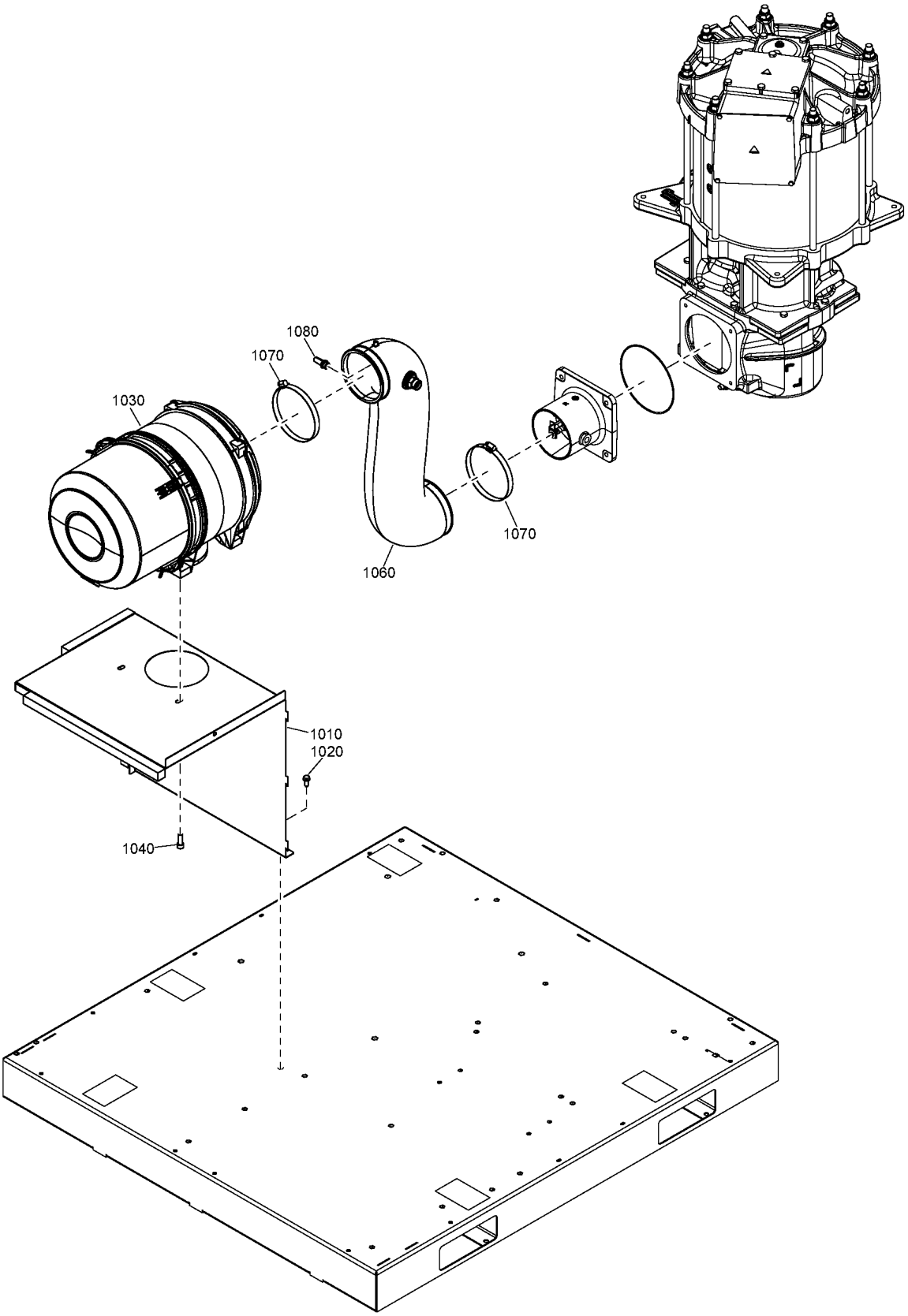
1080
1070
1030
1070
1060
1010
1020
1040

Ref	Part Number	Qty	Name	Validity
1010	1649 8001 97	1	SUPPORT	**(02/03/2017 - 05/07/2017)** MODEL:GA110VP_16 , MODEL:GA75VP_16 **(06/07/2017 - ...)**
1020	0147 1963 08	2	HEXAGON BOLT	**(02/03/2017 - 04/05/2017)** MODEL:GA110VP_16 , MODEL:GA75VP_16 **(19/04/2018 - ...)** MODEL:GA110VP_16 , MODEL:GA90VP_16
1020	0147 1963 08	3	SCREW	**(05/05/2017 - 05/07/2017)** MODEL:GA110VP_16 , MODEL:GA75VP_16 **(06/07/2017 - 18/04/2018)**
1020	0147 1963 08	2	HEXAGON BOLT	**(19/04/2018 - ...)** MODEL:GA75VP_16
1030	1621 0562 00	1	AIR FILTER	**(02/03/2017 - ...)** MODEL:GA75VP_16
	•	1	FILTER ELEMENT	
	Service kits:	2901 9901 01 - PREVENTIVE MAINTENANCE KIT - GA 75L VSD+ 2901 9900 95 - AIR FILTER KIT - GA 75L VSD+		
1030	1649 8002 20	1	AIR FILTER	**(02/03/2017 - 05/07/2017)** MODEL:GA110VP_16 **(06/07/2017 - ...)** MODEL:GA110VP_16 , MODEL:GA90VP_16
	•	1	FILTER ELEMENT	**(20/03/2017 - ...)** MODEL:GA110VP_16 , MODEL:GA90VP_16
	Service kits:	2901 9901 02 - PREVENTIVE MAINTENANCE KIT - GA 90 VSD+, GA 110 VSD+ 2901 9900 96 - AIR FILTER KIT - GA 90 VSD+, GA 110 VSD+		
1040	0211 1363 03	2	SCREW	**(05/05/2017 - 05/07/2017)** MODEL:GA110VP_16 , MODEL:GA75VP_16 **(06/07/2017 - ...)**
1060	1649 8001 33	1	HOSE	**(02/03/2017 - 05/07/2017)** MODEL:GA110VP_16 , MODEL:GA75VP_16 **(06/07/2017 - ...)**
1070	0347 6120 00	2	HOSE CLIP	**(02/03/2017 - 05/07/2017)** MODEL:GA110VP_16 , MODEL:GA75VP_16 **(06/07/2017 - ...)**
1080	0803 5011 40	1	SILENCER	**(22/11/2017 - ...)**
1080	~~0803 5011 34~~	1	SILENCER	**(02/03/2017 - 05/07/2017)** MODEL:GA110VP_16 , MODEL:GA75VP_16 **(06/07/2017 - 21/11/2017)**
	Substituted by:	0803 5011 40 - SILENCER (quantity: 1)		

Legend:

MODEL:GA110VP_16 - Model:GA 110VSD+ MODEL:GA75VP_16 - Model:GA 75VSD+ MODEL:GA90VP_16 - Model:GA 90VSD+

6.4 - Air receiver AS1210, CE, MOM - RIF Oil, MHLW - RXD Oil

(((CAPPRM:AS1210 , CAPPRM:CE , CAPPRM:MOM) + MOVOL:400V , CAPPRM:CE + COOL:AIR + MOVOL:500V) + FREQ:50HZ , (MOVOL:380V , MOVOL:460V) + CAPPRM:ASME + FREQ:60HZ) + OILTYP:RIF , ((COOL:AIR + MOVOL:200V , FREQ:50HZ + MOVOL:400V , FREQ:60HZ + MOVOL:460V) + CAPPRM:MHLW , (COOL:AIR + MOVOL:230V , MOVOL:460V) + (MODEL:GA75VP_16 , MODEL:GA90VP_16) + CAPPRM:ASME + FREQ:60HZ) + OILTYP:RXD

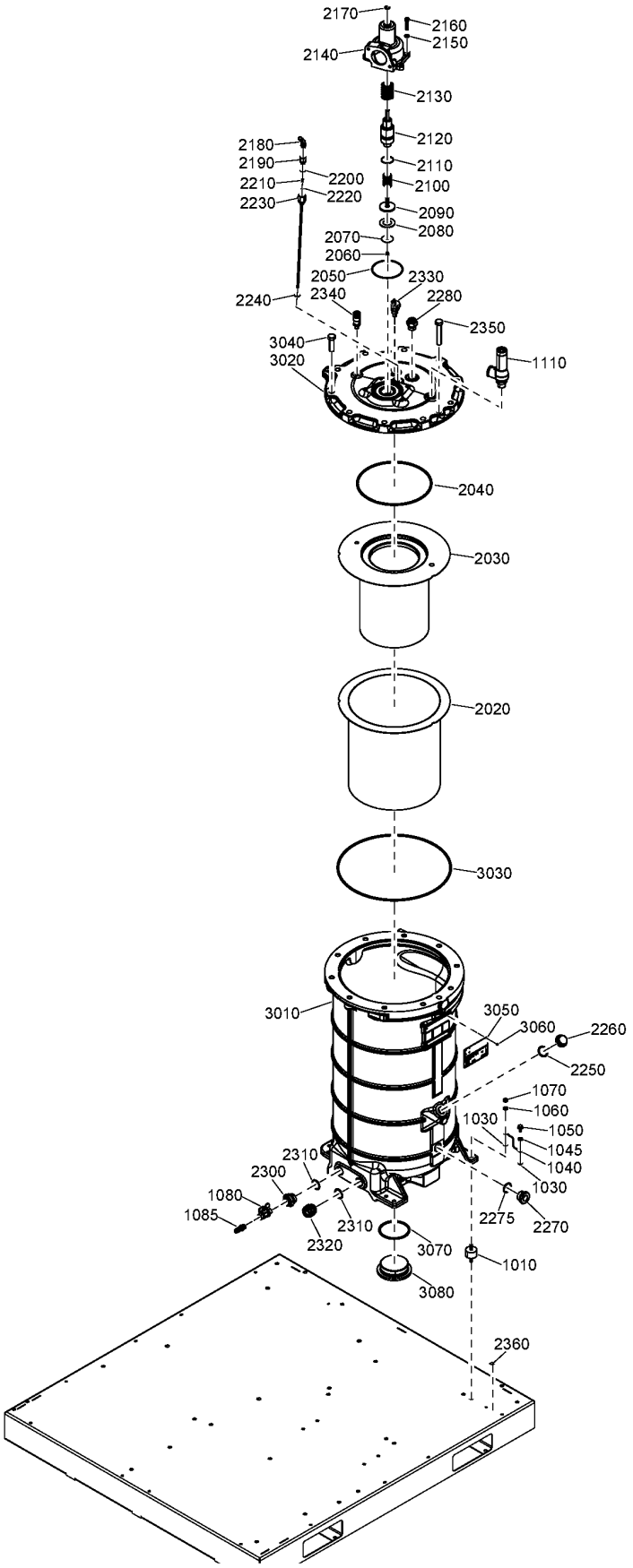

6.4 - Air receiver AS1210, CE, MOM - RIF Oil, MHLW - RXD Oil

(((CAPPRM:AS1210 , CAPPRM:CE , CAPPRM:MOM) + MOVOL:400V , CAPPRM:CE + COOL:AIR + MOVOL:500V) + FREQ:50HZ , (MOVOL:380V , MOVOL:460V) + CAPPRM:ASME + FREQ:60HZ) + OILTYP:RIF , ((COOL:AIR + MOVOL:200V , FREQ:50HZ + MOVOL:400V , FREQ:60HZ + MOVOL:460V) + CAPPRM:MHLW , (COOL:AIR + MOVOL:230V , MOVOL:460V) + (MODEL:GA75VP_16 , MODEL:GA90VP_16) + CAPPRM:ASME + FREQ:60HZ) + OILTYP:RXD

Ref	Part Number	Qty	Name	Validity
1010	1649 8002 87	4	BUFFER	**(09/03/2017 - 12/07/2017)** ((MODEL:GA110VP_16 + MOVOL:380V + OILTYP:RIF , MODEL:GA75VP_16 + MOVOL:460V + OILTYP:RXD) + CAPPRM:ASME + FREQ:60HZ , CAPPRM:CE + FREQ:50HZ + MOVOL:400V + OILTYP:RIF) + COOL:AIR **(13/07/2017 - 19/07/2017)** (((MOVOL:230V , MOVOL:460V) + MODEL:GA75VP_16 + OILTYP:RXD , (MOVOL:380V , MOVOL:460V) + MODEL:GA110VP_16 + OILTYP:RIF) + CAPPRM:ASME + FREQ:60HZ , (MOVOL:400V , MOVOL:500V) + CAPPRM:CE + FREQ:50HZ + OILTYP:RIF) + COOL:AIR **(20/07/2017 - 20/08/2018)** ((((CAPPRM:AS1210 , CAPPRM:CE , CAPPRM:MOM) + MOVOL:400V , CAPPRM:CE + MOVOL:500V) + FREQ:50HZ , (MOVOL:380V , MOVOL:460V) + CAPPRM:ASME + FREQ:60HZ) + OILTYP:RIF , (((FREQ:50HZ , FREQ:60HZ) + MOVOL:200V , FREQ:50HZ + MOVOL:400V , FREQ:60HZ + MOVOL:460V) + CAPPRM:MHLW , (MODEL:GA75VP_16 , MODEL:GA90VP_16) + (MOVOL:230V , MOVOL:460V) + CAPPRM:ASME + FREQ:60HZ) + OILTYP:RXD) + COOL:AIR **(21/08/2018 - 04/12/2018)** ((((CAPPRM:AS1210 , CAPPRM:CE , CAPPRM:MOM) + MOVOL:400V , CAPPRM:CE + MOVOL:500V) + FREQ:50HZ , (MOVOL:380V , MOVOL:460V) + CAPPRM:ASME + FREQ:60HZ) + OILTYP:RIF , CAPPRM:MHLW + MOVOL:200V + OILTYP:RXD) + COOL:AIR , (((COOL:AIR + MOVOL:230V , MOVOL:460V) + (MODEL:GA75VP_16 , MODEL:GA90VP_16) + CAPPRM:ASME , CAPPRM:MHLW + MOVOL:460V) + FREQ:60HZ , CAPPRM:MHLW + FREQ:50HZ + MOVOL:400V) + OILTYP:RXD **(05/12/2018 - 30/12/2027)** **(31/12/2027 - ...)** (((CAPPRM:AS1210 , CAPPRM:CE , CAPPRM:MOM) + MOVOL:400V , CAPPRM:CE + COOL:AIR + MOVOL:500V) + FREQ:50HZ , (MOVOL:380V , MOVOL:460V) + CAPPRM:ASME + FREQ:60HZ) + OILTYP:RIF , (((CAPPRM:ASME + FREQ:60HZ + MOVOL:230V , CAPPRM:MHLW + MOVOL:200V) + COOL:AIR , CAPPRM:ASME + FREQ:60HZ + MOVOL:460V) + (MODEL:GA75VP_16 , MODEL:GA90VP_16) , (FREQ:50HZ + MOVOL:400V , FREQ:60HZ + MOVOL:460V) + CAPPRM:MHLW) + OILTYP:RXD
1030	0333 3227 00	2	WASHER	**(09/03/2017 - 12/07/2017)** ((MODEL:GA110VP_16 + MOVOL:380V + OILTYP:RIF , MODEL:GA75VP_16 + MOVOL:460V + OILTYP:RXD) + CAPPRM:ASME + FREQ:60HZ , CAPPRM:CE + FREQ:50HZ + MOVOL:400V + OILTYP:RIF) + COOL:AIR **(13/07/2017 - 19/07/2017)** (((MOVOL:230V , MOVOL:460V) + MODEL:GA75VP_16 + OILTYP:RXD , (MOVOL:380V , MOVOL:460V) + MODEL:GA110VP_16 + OILTYP:RIF) + CAPPRM:ASME + FREQ:60HZ , (MOVOL:400V , MOVOL:500V) + CAPPRM:CE + FREQ:50HZ + OILTYP:RIF) + COOL:AIR **(20/07/2017 - 20/08/2018)** ((((CAPPRM:AS1210 , CAPPRM:CE , CAPPRM:MOM) + MOVOL:400V , CAPPRM:CE + MOVOL:500V) + FREQ:50HZ , (MOVOL:380V , MOVOL:460V) + CAPPRM:ASME + FREQ:60HZ) + OILTYP:RIF , (((FREQ:50HZ , FREQ:60HZ) + MOVOL:200V , FREQ:50HZ + MOVOL:400V , FREQ:60HZ + MOVOL:460V) + CAPPRM:MHLW , (MODEL:GA75VP_16 , MODEL:GA90VP_16) + (MOVOL:230V , MOVOL:460V) + CAPPRM:ASME + FREQ:60HZ) + OILTYP:RXD) + COOL:AIR **(21/08/2018 - 04/12/2018)** ((((CAPPRM:AS1210 , CAPPRM:CE , CAPPRM:MOM) + MOVOL:400V , CAPPRM:CE + MOVOL:500V) + FREQ:50HZ , (MOVOL:380V , MOVOL:460V) + CAPPRM:ASME + FREQ:60HZ) + OILTYP:RIF , CAPPRM:MHLW + MOVOL:200V + OILTYP:RXD) + COOL:AIR , (((COOL:AIR + MOVOL:230V , MOVOL:460V) + (MODEL:GA75VP_16 , MODEL:GA90VP_16) + CAPPRM:ASME , CAPPRM:MHLW + MOVOL:460V) + FREQ:60HZ , CAPPRM:MHLW + FREQ:50HZ + MOVOL:400V) + OILTYP:RXD **(05/12/2018 - 30/12/2027)** **(31/12/2027 - ...)** (((CAPPRM:AS1210 , CAPPRM:CE , CAPPRM:MOM) + MOVOL:400V , CAPPRM:CE + COOL:AIR + MOVOL:500V) + FREQ:50HZ , (MOVOL:380V , MOVOL:460V) + CAPPRM:ASME + FREQ:60HZ) + OILTYP:RIF , (((CAPPRM:ASME + FREQ:60HZ + MOVOL:230V , CAPPRM:MHLW + MOVOL:200V) + COOL:AIR , CAPPRM:ASME + FREQ:60HZ + MOVOL:460V) + (MODEL:GA75VP_16 , MODEL:GA90VP_16) , (FREQ:50HZ + MOVOL:400V , FREQ:60HZ + MOVOL:460V) + CAPPRM:MHLW) + OILTYP:RXD

Legend:

CAPPRM:AS1210 - Component approval mechanical:AS1210
CAPPRM:ASME - Component approval mechanical:ASME
CAPPRM:CE - Component approval mechanical:CE
CAPPRM:MHLW - Component approval mechanical:MHLW
CAPPRM:MOM - Component approval mechanical:MOM
COOL:AIR - Cooling:Air cooled
COOL:WATER - Cooling:Water cooled
FREQ:50HZ - Frequency:50 Hz
FREQ:60HZ - Frequency:60 Hz
MODEL:GA110VP_16 - Model:GA 110VSD+
MODEL:GA75VP_16 - Model:GA 75VSD+
MODEL:GA90VP_16 - Model:GA 90VSD+
MOVOL:200V - Supply voltage:200 V
MOVOL:230V - Supply voltage:230 V
MOVOL:380V - Supply voltage:380 V
MOVOL:400V - Supply voltage:400 V
MOVOL:460V - Supply voltage:460 V
MOVOL:500V - Supply voltage:500 V
OILTYP:RIF - Oil type:Roto inject fluid oil
OILTYP:RXD - Oil type:Roto-Xtend Duty Fluid

6.4 - Air receiver AS1210, CE, MOM - RIF Oil, MHLW - RXD Oil

(((CAPPRM:AS1210 , CAPPRM:CE , CAPPRM:MOM) + MOVOL:400V , CAPPRM:CE + COOL:AIR + MOVOL:500V) + FREQ:50HZ , (MOVOL:380V , MOVOL:460V) + CAPPRM:ASME + FREQ:60HZ) + OILTYP:RIF , ((COOL:AIR + MOVOL:200V , FREQ:50HZ + MOVOL:400V , FREQ:60HZ + MOVOL:460V) + CAPPRM:MHLW , (COOL:AIR + MOVOL:230V , MOVOL:460V) + (MODEL:GA75VP_16 , MODEL:GA90VP_16) + CAPPRM:ASME + FREQ:60HZ) + OILTYP:RXD

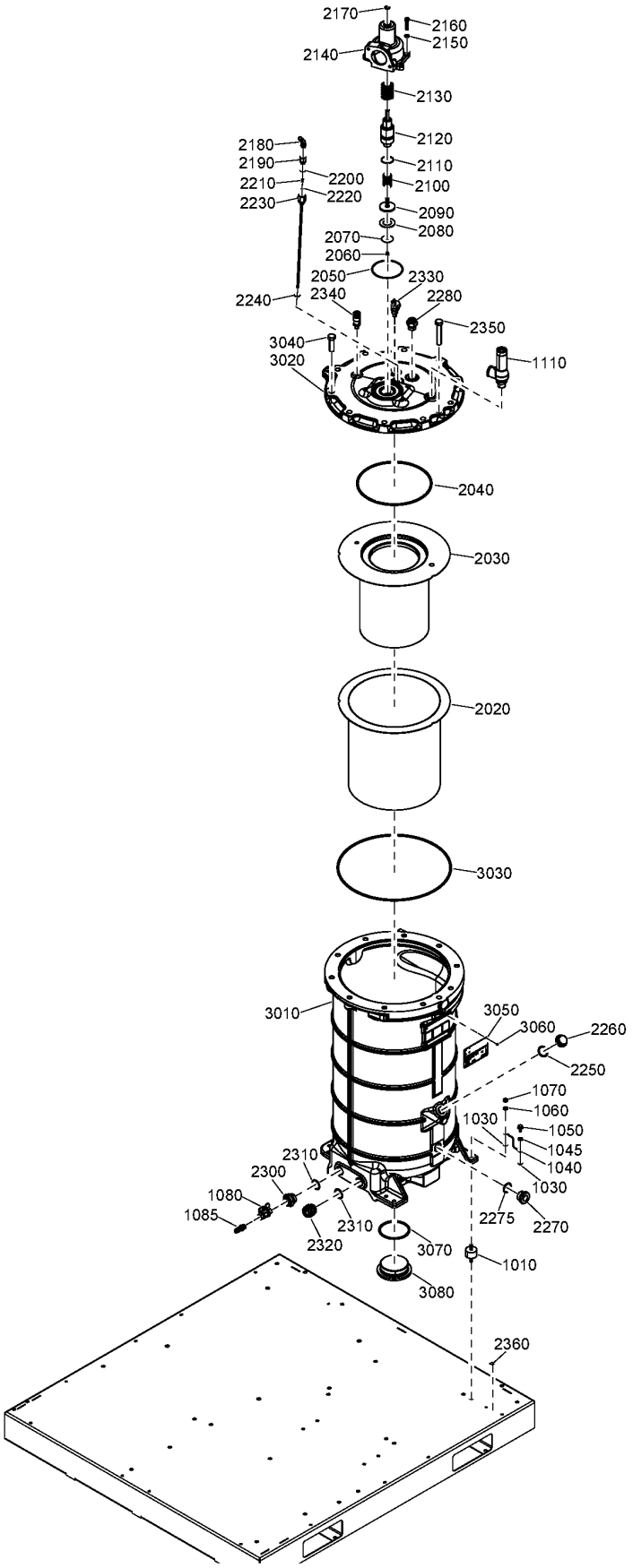

6.4 - Air receiver AS1210, CE, MOM - RIF Oil, MHLW - RXD Oil

(((CAPPRM:AS1210 , CAPPRM:CE , CAPPRM:MOM) + MOVOL:400V , CAPPRM:CE + COOL:AIR + MOVOL:500V) + FREQ:50HZ , (MOVOL:380V , MOVOL:460V) + CAPPRM:ASME + FREQ:60HZ) + OILTYP:RIF , ((COOL:AIR + MOVOL:200V , FREQ:50HZ + MOVOL:400V , FREQ:60HZ + MOVOL:460V) + CAPPRM:MHLW , (COOL:AIR + MOVOL:230V , MOVOL:460V) + (MODEL:GA75VP_16 , MODEL:GA90VP_16) + CAPPRM:ASME + FREQ:60HZ) + OILTYP:RXD

Ref	Part Number	Qty	Name	Validity
1040	1613 8967 12	1	GROUNDING WIRE	**(09/03/2017 - 12/07/2017)** ((MODEL:GA110VP_16 + MOVOL:380V + OILTYP:RIF , MODEL:GA75VP_16 + MOVOL:460V + OILTYP:RXD) + CAPPRM:ASME + FREQ:60HZ , CAPPRM:CE + FREQ:50HZ + MOVOL:400V + OILTYP:RIF) + COOL:AIR **(13/07/2017 - 19/07/2017)** (((MOVOL:230V , MOVOL:460V) + MODEL:GA75VP_16 + OILTYP:RXD , (MOVOL:380V , MOVOL:460V) + MODEL:GA110VP_16 + OILTYP:RIF) + CAPPRM:ASME + FREQ:60HZ , (MOVOL:400V , MOVOL:500V) + CAPPRM:CE + FREQ:50HZ + OILTYP:RIF) + COOL:AIR **(20/07/2017 - 20/08/2018)** ((((CAPPRM:AS1210 , CAPPRM:CE , CAPPRM:MOM) + MOVOL:400V , CAPPRM:CE + MOVOL:500V) + FREQ:50HZ , (MOVOL:380V , MOVOL:460V) + CAPPRM:ASME + FREQ:60HZ) + OILTYP:RIF , (((FREQ:50HZ , FREQ:60HZ) + MOVOL:200V , FREQ:50HZ + MOVOL:400V , FREQ:60HZ + MOVOL:460V) + CAPPRM:MHLW , (MODEL:GA75VP_16 , MODEL:GA90VP_16) + (MOVOL:230V , MOVOL:460V) + CAPPRM:ASME + FREQ:60HZ) + OILTYP:RXD) + COOL:AIR **(21/08/2018 - 04/12/2018)** ((((CAPPRM:AS1210 , CAPPRM:CE , CAPPRM:MOM) + MOVOL:400V , CAPPRM:CE + MOVOL:500V) + FREQ:50HZ , (MOVOL:380V , MOVOL:460V) + CAPPRM:ASME + FREQ:60HZ) + OILTYP:RIF , CAPPRM:MHLW + MOVOL:200V + OILTYP:RXD) + COOL:AIR , (((COOL:AIR + MOVOL:230V , MOVOL:460V) + (MODEL:GA75VP_16 , MODEL:GA90VP_16) + CAPPRM:ASME , CAPPRM:MHLW + MOVOL:460V) + FREQ:60HZ , CAPPRM:MHLW + FREQ:50HZ + MOVOL:400V) + OILTYP:RXD **(05/12/2018 - 30/12/2027)** **(31/12/2027 - ...)** (((CAPPRM:AS1210 , CAPPRM:CE , CAPPRM:MOM) + MOVOL:400V , CAPPRM:CE + COOL:AIR + MOVOL:500V) + FREQ:50HZ , (MOVOL:380V , MOVOL:460V) + CAPPRM:ASME + FREQ:60HZ) + OILTYP:RIF , (((CAPPRM:ASME + FREQ:60HZ + MOVOL:230V , CAPPRM:MHLW + MOVOL:200V) + COOL:AIR , CAPPRM:ASME + FREQ:60HZ + MOVOL:460V) + (MODEL:GA75VP_16 , MODEL:GA90VP_16) , (FREQ:50HZ + MOVOL:400V , FREQ:60HZ + MOVOL:460V) + CAPPRM:MHLW) + OILTYP:RXD
1045	0301 2335 00	1	WASHER	**(05/05/2017 - 12/07/2017)** ((MODEL:GA110VP_16 + MOVOL:380V + OILTYP:RIF , MODEL:GA75VP_16 + MOVOL:460V + OILTYP:RXD) + CAPPRM:ASME + FREQ:60HZ , CAPPRM:CE + FREQ:50HZ + MOVOL:400V + OILTYP:RIF) + COOL:AIR **(13/07/2017 - 19/07/2017)** (((MOVOL:230V , MOVOL:460V) + MODEL:GA75VP_16 + OILTYP:RXD , (MOVOL:380V , MOVOL:460V) + MODEL:GA110VP_16 + OILTYP:RIF) + CAPPRM:ASME + FREQ:60HZ , (MOVOL:400V , MOVOL:500V) + CAPPRM:CE + FREQ:50HZ + OILTYP:RIF) + COOL:AIR **(20/07/2017 - 20/08/2018)** ((((CAPPRM:AS1210 , CAPPRM:CE , CAPPRM:MOM) + MOVOL:400V , CAPPRM:CE + MOVOL:500V) + FREQ:50HZ , (MOVOL:380V , MOVOL:460V) + CAPPRM:ASME + FREQ:60HZ) + OILTYP:RIF , (((FREQ:50HZ , FREQ:60HZ) + MOVOL:200V , FREQ:50HZ + MOVOL:400V , FREQ:60HZ + MOVOL:460V) + CAPPRM:MHLW , (MODEL:GA75VP_16 , MODEL:GA90VP_16) + (MOVOL:230V , MOVOL:460V) + CAPPRM:ASME + FREQ:60HZ) + OILTYP:RXD) + COOL:AIR **(21/08/2018 - 04/12/2018)** ((((CAPPRM:AS1210 , CAPPRM:CE , CAPPRM:MOM) + MOVOL:400V , CAPPRM:CE + MOVOL:500V) + FREQ:50HZ , (MOVOL:380V , MOVOL:460V) + CAPPRM:ASME + FREQ:60HZ) + OILTYP:RIF , CAPPRM:MHLW + MOVOL:200V + OILTYP:RXD) + COOL:AIR , (((COOL:AIR + MOVOL:230V , MOVOL:460V) + (MODEL:GA75VP_16 , MODEL:GA90VP_16) + CAPPRM:ASME , CAPPRM:MHLW + MOVOL:460V) + FREQ:60HZ , CAPPRM:MHLW + FREQ:50HZ + MOVOL:400V) + OILTYP:RXD **(05/12/2018 - 30/12/2027)** **(31/12/2027 - ...)** (((CAPPRM:AS1210 , CAPPRM:CE , CAPPRM:MOM) + MOVOL:400V , CAPPRM:CE + COOL:AIR + MOVOL:500V) + FREQ:50HZ , (MOVOL:380V , MOVOL:460V) + CAPPRM:ASME + FREQ:60HZ) + OILTYP:RIF , (((CAPPRM:ASME + FREQ:60HZ + MOVOL:230V , CAPPRM:MHLW + MOVOL:200V) + COOL:AIR , CAPPRM:ASME + FREQ:60HZ + MOVOL:460V) + (MODEL:GA75VP_16 , MODEL:GA90VP_16) , (FREQ:50HZ + MOVOL:400V , FREQ:60HZ + MOVOL:460V) + CAPPRM:MHLW) + OILTYP:RXD

Legend:

CAPPRM:AS1210 - Component approval mechanical:AS1210
CAPPRM:ASME - Component approval mechanical:ASME
CAPPRM:CE - Component approval mechanical:CE
CAPPRM:MHLW - Component approval mechanical:MHLW
CAPPRM:MOM - Component approval mechanical:MOM
COOL:AIR - Cooling:Air cooled
COOL:WATER - Cooling:Water cooled
FREQ:50HZ - Frequency:50 Hz
FREQ:60HZ - Frequency:60 Hz
MODEL:GA110VP_16 - Model:GA 110VSD+
MODEL:GA75VP_16 - Model:GA 75VSD+
MODEL:GA90VP_16 - Model:GA 90VSD+
MOVOL:200V - Supply voltage:200 V
MOVOL:230V - Supply voltage:230 V
MOVOL:380V - Supply voltage:380 V
MOVOL:400V - Supply voltage:400 V
MOVOL:460V - Supply voltage:460 V
MOVOL:500V - Supply voltage:500 V
OILTYP:RIF - Oil type:Roto inject fluid oil
OILTYP:RXD - Oil type:Roto-Xtend Duty Fluid

6.4 - Air receiver AS1210, CE, MOM - RIF Oil, MHLW - RXD Oil

(((CAPPRM:AS1210 , CAPPRM:CE , CAPPRM:MOM) + MOVOL:400V , CAPPRM:CE + COOL:AIR + MOVOL:500V) + FREQ:50HZ , (MOVOL:380V , MOVOL:460V) + CAPPRM:ASME + FREQ:60HZ) + OILTYP:RIF , ((COOL:AIR + MOVOL:200V , FREQ:50HZ + MOVOL:400V , FREQ:60HZ + MOVOL:460V) + CAPPRM:MHLW , (COOL:AIR + MOVOL:230V , MOVOL:460V) + (MODEL:GA75VP_16 , MODEL:GA90VP_16) + CAPPRM:ASME + FREQ:60HZ) + OILTYP:RXD

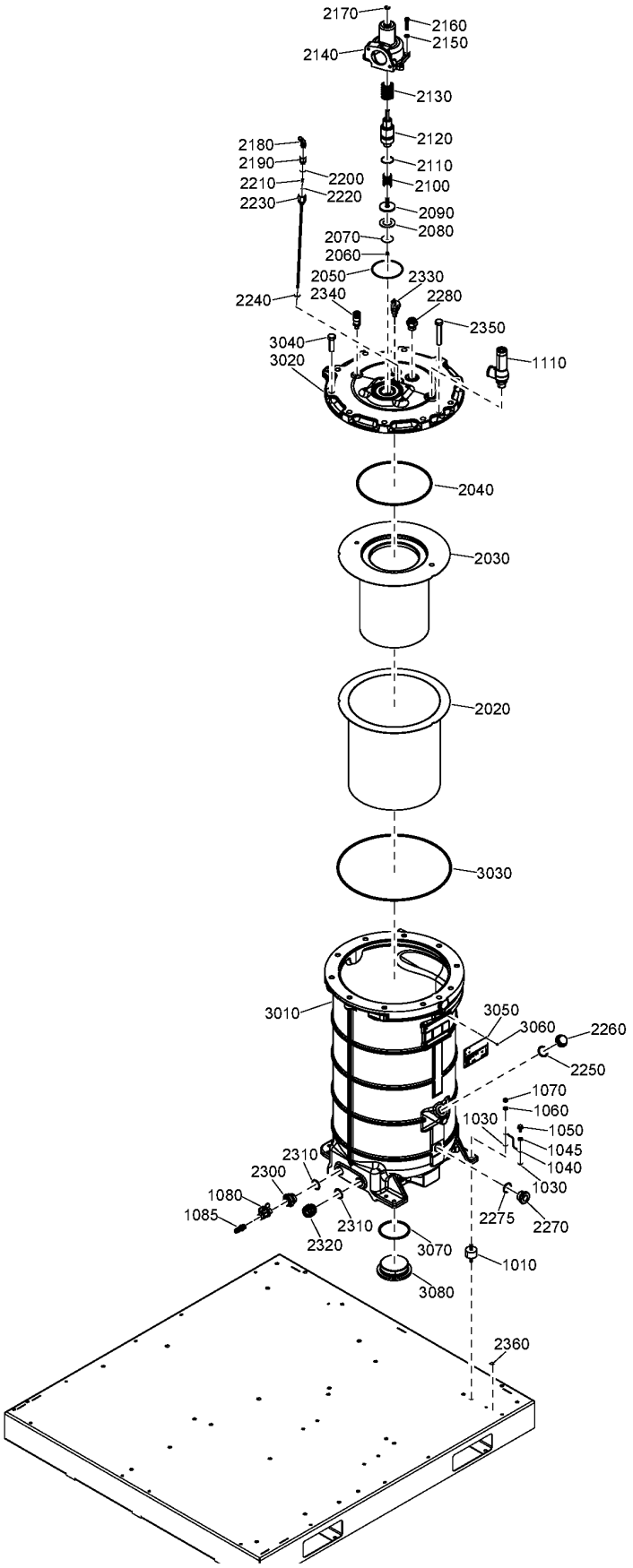

Ref	Part Number	Qty	Name	Validity
1050	0226 0301 00	1	TAPPING SCREW	**(09/03/2017 - 12/07/2017)** ((MODEL:GA110VP_16 + MOVOL:380V + OILTYP:RIF , MODEL:GA75VP_16 + MOVOL:460V + OILTYP:RXD) + CAPPRM:ASME + FREQ:60HZ , CAPPRM:CE + FREQ:50HZ + MOVOL:400V + OILTYP:RIF) + COOL:AIR **(13/07/2017 - 19/07/2017)** (((MOVOL:230V , MOVOL:460V) + MODEL:GA75VP_16 + OILTYP:RXD , (MOVOL:380V , MOVOL:460V) + MODEL:GA110VP_16 + OILTYP:RIF) + CAPPRM:ASME + FREQ:60HZ , (MOVOL:400V , MOVOL:500V) + CAPPRM:CE + FREQ:50HZ + OILTYP:RIF) + COOL:AIR **(20/07/2017 - 20/08/2018)** ((((CAPPRM:AS1210 , CAPPRM:CE , CAPPRM:MOM) + MOVOL:400V , CAPPRM:CE + MOVOL:500V) + FREQ:50HZ , (MOVOL:380V , MOVOL:460V) + CAPPRM:ASME + FREQ:60HZ) + OILTYP:RIF , (((FREQ:50HZ , FREQ:60HZ) + MOVOL:200V , FREQ:50HZ + MOVOL:400V , FREQ:60HZ + MOVOL:460V) + CAPPRM:MHLW , (MODEL:GA75VP_16 , MODEL:GA90VP_16) + (MOVOL:230V , MOVOL:460V) + CAPPRM:ASME + FREQ:60HZ) + OILTYP:RXD) + COOL:AIR **(21/08/2018 - 04/12/2018)** ((((CAPPRM:AS1210 , CAPPRM:CE , CAPPRM:MOM) + MOVOL:400V , CAPPRM:CE + MOVOL:500V) + FREQ:50HZ , (MOVOL:380V , MOVOL:460V) + CAPPRM:ASME + FREQ:60HZ) + OILTYP:RIF , CAPPRM:MHLW + MOVOL:200V + OILTYP:RXD) + COOL:AIR , (((COOL:AIR + MOVOL:230V , MOVOL:460V) + (MODEL:GA75VP_16 , MODEL:GA90VP_16) + CAPPRM:ASME , CAPPRM:MHLW + MOVOL:460V) + FREQ:60HZ , CAPPRM:MHLW + FREQ:50HZ + MOVOL:400V) + OILTYP:RXD **(05/12/2018 - 30/12/2027)** **(31/12/2027 - ...)** (((CAPPRM:AS1210 , CAPPRM:CE , CAPPRM:MOM) + MOVOL:400V , CAPPRM:CE + COOL:AIR + MOVOL:500V) + FREQ:50HZ , (MOVOL:380V , MOVOL:460V) + CAPPRM:ASME + FREQ:60HZ) + OILTYP:RIF , (((CAPPRM:ASME + FREQ:60HZ + MOVOL:230V , CAPPRM:MHLW + MOVOL:200V) + COOL:AIR , CAPPRM:ASME + FREQ:60HZ + MOVOL:460V) + (MODEL:GA75VP_16 , MODEL:GA90VP_16) , (FREQ:50HZ + MOVOL:400V , FREQ:60HZ + MOVOL:460V) + CAPPRM:MHLW) + OILTYP:RXD
1060	0301 2335 00	4	WASHER	**(09/03/2017 - 12/07/2017)** ((MODEL:GA110VP_16 + MOVOL:380V + OILTYP:RIF , MODEL:GA75VP_16 + MOVOL:460V + OILTYP:RXD) + CAPPRM:ASME + FREQ:60HZ , CAPPRM:CE + FREQ:50HZ + MOVOL:400V + OILTYP:RIF) + COOL:AIR **(13/07/2017 - 19/07/2017)** (((MOVOL:230V , MOVOL:460V) + MODEL:GA75VP_16 + OILTYP:RXD , (MOVOL:380V , MOVOL:460V) + MODEL:GA110VP_16 + OILTYP:RIF) + CAPPRM:ASME + FREQ:60HZ , (MOVOL:400V , MOVOL:500V) + CAPPRM:CE + FREQ:50HZ + OILTYP:RIF) + COOL:AIR **(20/07/2017 - 20/08/2018)** ((((CAPPRM:AS1210 , CAPPRM:CE , CAPPRM:MOM) + MOVOL:400V , CAPPRM:CE + MOVOL:500V) + FREQ:50HZ , (MOVOL:380V , MOVOL:460V) + CAPPRM:ASME + FREQ:60HZ) + OILTYP:RIF , (((FREQ:50HZ , FREQ:60HZ) + MOVOL:200V , FREQ:50HZ + MOVOL:400V , FREQ:60HZ + MOVOL:460V) + CAPPRM:MHLW , (MODEL:GA75VP_16 , MODEL:GA90VP_16) + (MOVOL:230V , MOVOL:460V) + CAPPRM:ASME + FREQ:60HZ) + OILTYP:RXD) + COOL:AIR **(21/08/2018 - 04/12/2018)** ((((CAPPRM:AS1210 , CAPPRM:CE , CAPPRM:MOM) + MOVOL:400V , CAPPRM:CE + MOVOL:500V) + FREQ:50HZ , (MOVOL:380V , MOVOL:460V) + CAPPRM:ASME + FREQ:60HZ) + OILTYP:RIF , CAPPRM:MHLW + MOVOL:200V + OILTYP:RXD) + COOL:AIR , (((COOL:AIR + MOVOL:230V , MOVOL:460V) + (MODEL:GA75VP_16 , MODEL:GA90VP_16) + CAPPRM:ASME , CAPPRM:MHLW + MOVOL:460V) + FREQ:60HZ , CAPPRM:MHLW + FREQ:50HZ + MOVOL:400V) + OILTYP:RXD **(05/12/2018 - 30/12/2027)** **(31/12/2027 - ...)** (((CAPPRM:AS1210 , CAPPRM:CE , CAPPRM:MOM) + MOVOL:400V , CAPPRM:CE + COOL:AIR + MOVOL:500V) + FREQ:50HZ , (MOVOL:380V , MOVOL:460V) + CAPPRM:ASME + FREQ:60HZ) + OILTYP:RIF , (((CAPPRM:ASME + FREQ:60HZ + MOVOL:230V , CAPPRM:MHLW + MOVOL:200V) + COOL:AIR , CAPPRM:ASME + FREQ:60HZ + MOVOL:460V) + (MODEL:GA75VP_16 , MODEL:GA90VP_16) , (FREQ:50HZ + MOVOL:400V , FREQ:60HZ + MOVOL:460V) + CAPPRM:MHLW) + OILTYP:RXD

Legend:

CAPPRM:AS1210 - Component approval mechanical:AS1210
CAPPRM:ASME - Component approval mechanical:ASME
CAPPRM:CE - Component approval mechanical:CE
CAPPRM:MHLW - Component approval mechanical:MHLW
CAPPRM:MOM - Component approval mechanical:MOM
COOL:AIR - Cooling:Air cooled
COOL:WATER - Cooling:Water cooled
FREQ:50HZ - Frequency:50 Hz
FREQ:60HZ - Frequency:60 Hz
MODEL:GA110VP_16 - Model:GA 110VSD+
MODEL:GA75VP_16 - Model:GA 75VSD+
MODEL:GA90VP_16 - Model:GA 90VSD+
MOVOL:200V - Supply voltage:200 V
MOVOL:230V - Supply voltage:230 V
MOVOL:380V - Supply voltage:380 V
MOVOL:400V - Supply voltage:400 V
MOVOL:460V - Supply voltage:460 V
MOVOL:500V - Supply voltage:500 V
OILTYP:RIF - Oil type:Roto inject fluid oil
OILTYP:RXD - Oil type:Roto-Xtend Duty Fluid

6.4 - Air receiver AS1210, CE, MOM - RIF Oil, MHLW - RXD Oil

(((CAPPRM:AS1210 , CAPPRM:CE , CAPPRM:MOM) + MOVOL:400V , CAPPRM:CE + COOL:AIR + MOVOL:500V) + FREQ:50HZ , (MOVOL:380V , MOVOL:460V) + CAPPRM:ASME + FREQ:60HZ) + OILTYP:RIF , ((COOL:AIR + MOVOL:200V , FREQ:50HZ + MOVOL:400V , FREQ:60HZ + MOVOL:460V) + CAPPRM:MHLW , (COOL:AIR + MOVOL:230V , MOVOL:460V) + (MODEL:GA75VP_16 , MODEL:GA90VP_16) + CAPPRM:ASME + FREQ:60HZ) + OILTYP:RXD

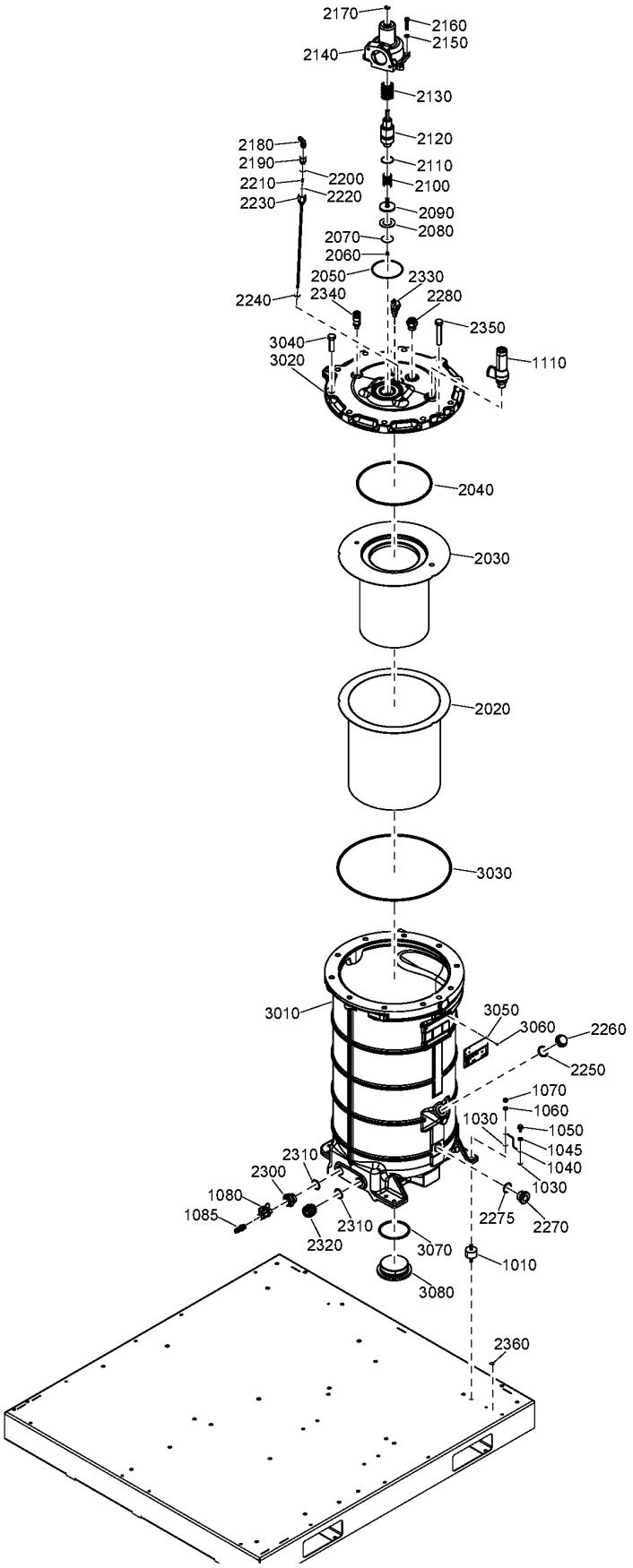

Ref	Part Number	Qty	Name	Validity
1070	0266 2110 00	4	NUT	**(09/03/2017 - 12/07/2017)** ((MODEL:GA110VP_16 + MOVOL:380V + OILTYP:RIF , MODEL:GA75VP_16 + MOVOL:460V + OILTYP:RXD) + CAPPRM:ASME + FREQ:60HZ , CAPPRM:CE + FREQ:50HZ + MOVOL:400V + OILTYP:RIF) + COOL:AIR **(13/07/2017 - 19/07/2017)** (((MOVOL:230V , MOVOL:460V) + MODEL:GA75VP_16 + OILTYP:RXD , (MOVOL:380V , MOVOL:460V) + MODEL:GA110VP_16 + OILTYP:RIF) + CAPPRM:ASME + FREQ:60HZ , (MOVOL:400V , MOVOL:500V) + CAPPRM:CE + FREQ:50HZ + OILTYP:RIF) + COOL:AIR **(20/07/2017 - 20/08/2018)** ((((CAPPRM:AS1210 , CAPPRM:CE , CAPPRM:MOM) + MOVOL:400V , CAPPRM:CE + MOVOL:500V) + FREQ:50HZ , (MOVOL:380V , MOVOL:460V) + CAPPRM:ASME + FREQ:60HZ) + OILTYP:RIF , (((FREQ:50HZ , FREQ:60HZ) + MOVOL:200V , FREQ:50HZ + MOVOL:400V , FREQ:60HZ + MOVOL:460V) + CAPPRM:MHLW , (MODEL:GA75VP_16 , MODEL:GA90VP_16) + (MOVOL:230V , MOVOL:460V) + CAPPRM:ASME + FREQ:60HZ) + OILTYP:RXD) + COOL:AIR **(21/08/2018 - 04/12/2018)** ((((CAPPRM:AS1210 , CAPPRM:CE , CAPPRM:MOM) + MOVOL:400V , CAPPRM:CE + MOVOL:500V) + FREQ:50HZ , (MOVOL:380V , MOVOL:460V) + CAPPRM:ASME + FREQ:60HZ) + OILTYP:RIF , CAPPRM:MHLW + MOVOL:200V + OILTYP:RXD) + COOL:AIR , (((COOL:AIR + MOVOL:230V , MOVOL:460V) + (MODEL:GA75VP_16 , MODEL:GA90VP_16) + CAPPRM:ASME , CAPPRM:MHLW + MOVOL:460V) + FREQ:60HZ , CAPPRM:MHLW + FREQ:50HZ + MOVOL:400V) + OILTYP:RXD **(05/12/2018 - 30/12/2027)** **(31/12/2027 - ...)** (((CAPPRM:AS1210 , CAPPRM:CE , CAPPRM:MOM) + MOVOL:400V , CAPPRM:CE + COOL:AIR + MOVOL:500V) + FREQ:50HZ , (MOVOL:380V , MOVOL:460V) + CAPPRM:ASME + FREQ:60HZ) + OILTYP:RIF , (((CAPPRM:ASME + FREQ:60HZ + MOVOL:230V , CAPPRM:MHLW + MOVOL:200V) + COOL:AIR , CAPPRM:ASME + FREQ:60HZ + MOVOL:460V) + (MODEL:GA75VP_16 , MODEL:GA90VP_16) , (FREQ:50HZ + MOVOL:400V , FREQ:60HZ + MOVOL:460V) + CAPPRM:MHLW) + OILTYP:RXD
1080	0852 0011 51	1	BALL VALVE	**(09/03/2017 - 12/07/2017)** ((MODEL:GA110VP_16 + MOVOL:380V + OILTYP:RIF , MODEL:GA75VP_16 + MOVOL:460V + OILTYP:RXD) + CAPPRM:ASME + FREQ:60HZ , CAPPRM:CE + FREQ:50HZ + MOVOL:400V + OILTYP:RIF) + COOL:AIR **(13/07/2017 - 19/07/2017)** (((MOVOL:230V , MOVOL:460V) + MODEL:GA75VP_16 + OILTYP:RXD , (MOVOL:380V , MOVOL:460V) + MODEL:GA110VP_16 + OILTYP:RIF) + CAPPRM:ASME + FREQ:60HZ , (MOVOL:400V , MOVOL:500V) + CAPPRM:CE + FREQ:50HZ + OILTYP:RIF) + COOL:AIR **(20/07/2017 - 20/08/2018)** ((((CAPPRM:AS1210 , CAPPRM:CE , CAPPRM:MOM) + MOVOL:400V , CAPPRM:CE + MOVOL:500V) + FREQ:50HZ , (MOVOL:380V , MOVOL:460V) + CAPPRM:ASME + FREQ:60HZ) + OILTYP:RIF , (((FREQ:50HZ , FREQ:60HZ) + MOVOL:200V , FREQ:50HZ + MOVOL:400V , FREQ:60HZ + MOVOL:460V) + CAPPRM:MHLW , (MODEL:GA75VP_16 , MODEL:GA90VP_16) + (MOVOL:230V , MOVOL:460V) + CAPPRM:ASME + FREQ:60HZ) + OILTYP:RXD) + COOL:AIR **(21/08/2018 - 04/12/2018)** ((((CAPPRM:AS1210 , CAPPRM:CE , CAPPRM:MOM) + MOVOL:400V , CAPPRM:CE + MOVOL:500V) + FREQ:50HZ , (MOVOL:380V , MOVOL:460V) + CAPPRM:ASME + FREQ:60HZ) + OILTYP:RIF , CAPPRM:MHLW + MOVOL:200V + OILTYP:RXD) + COOL:AIR , (((COOL:AIR + MOVOL:230V , MOVOL:460V) + (MODEL:GA75VP_16 , MODEL:GA90VP_16) + CAPPRM:ASME , CAPPRM:MHLW + MOVOL:460V) + FREQ:60HZ , CAPPRM:MHLW + FREQ:50HZ + MOVOL:400V) + OILTYP:RXD **(05/12/2018 - 30/12/2027)** **(31/12/2027 - ...)** (((CAPPRM:AS1210 , CAPPRM:CE , CAPPRM:MOM) + MOVOL:400V , CAPPRM:CE + COOL:AIR + MOVOL:500V) + FREQ:50HZ , (MOVOL:380V , MOVOL:460V) + CAPPRM:ASME + FREQ:60HZ) + OILTYP:RIF , (((CAPPRM:ASME + FREQ:60HZ + MOVOL:230V , CAPPRM:MHLW + MOVOL:200V) + COOL:AIR , CAPPRM:ASME + FREQ:60HZ + MOVOL:460V) + (MODEL:GA75VP_16 , MODEL:GA90VP_16) , (FREQ:50HZ + MOVOL:400V , FREQ:60HZ + MOVOL:460V) + CAPPRM:MHLW) + OILTYP:RXD

Legend:

CAPPRM:AS1210 - Component approval mechanical:AS1210
CAPPRM:ASME - Component approval mechanical:ASME
CAPPRM:CE - Component approval mechanical:CE
CAPPRM:MHLW - Component approval mechanical:MHLW
CAPPRM:MOM - Component approval mechanical:MOM
COOL:AIR - Cooling:Air cooled
COOL:WATER - Cooling:Water cooled
FREQ:50HZ - Frequency:50 Hz
FREQ:60HZ - Frequency:60 Hz
MODEL:GA110VP_16 - Model:GA 110VSD+
MODEL:GA75VP_16 - Model:GA 75VSD+
MODEL:GA90VP_16 - Model:GA 90VSD+
MOVOL:200V - Supply voltage:200 V
MOVOL:230V - Supply voltage:230 V
MOVOL:380V - Supply voltage:380 V
MOVOL:400V - Supply voltage:400 V
MOVOL:460V - Supply voltage:460 V
MOVOL:500V - Supply voltage:500 V
OILTYP:RIF - Oil type:Roto inject fluid oil
OILTYP:RXD - Oil type:Roto-Xtend Duty Fluid

6.4 - Air receiver AS1210, CE, MOM - RIF Oil, MHLW - RXD Oil

(((CAPPRM:AS1210 , CAPPRM:CE , CAPPRM:MOM) + MOVOL:400V , CAPPRM:CE + COOL:AIR + MOVOL:500V) + FREQ:50HZ , (MOVOL:380V , MOVOL:460V) + CAPPRM:ASME + FREQ:60HZ) + OILTYP:RIF , ((COOL:AIR + MOVOL:200V , FREQ:50HZ + MOVOL:400V , FREQ:60HZ + MOVOL:460V) + CAPPRM:MHLW , (COOL:AIR + MOVOL:230V , MOVOL:460V) + (MODEL:GA75VP_16 , MODEL:GA90VP_16) + CAPPRM:ASME + FREQ:60HZ) + OILTYP:RXD

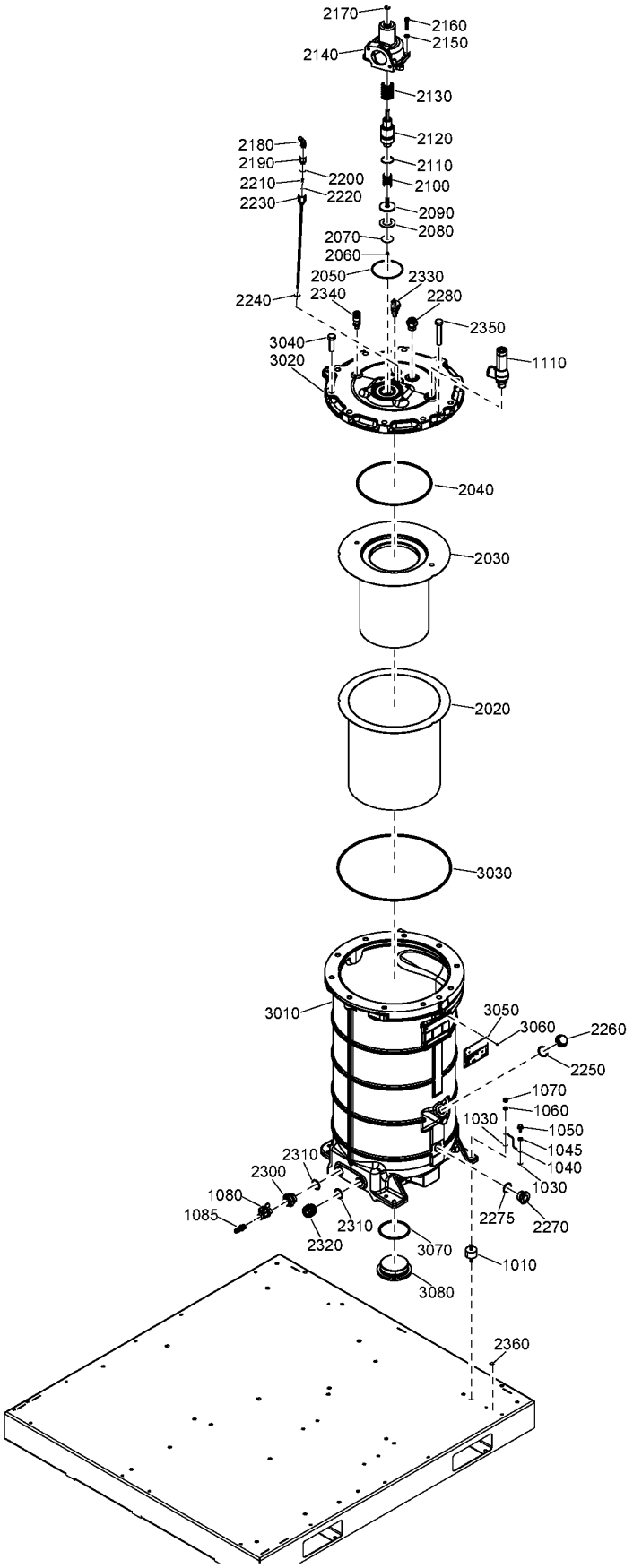

6.4 - Air receiver AS1210, CE, MOM - RIF Oil, MHLW - RXD Oil

(((CAPPRM:AS1210 , CAPPRM:CE , CAPPRM:MOM) + MOVOL:400V , CAPPRM:CE + COOL:AIR + MOVOL:500V) + FREQ:50HZ , (MOVOL:380V , MOVOL:460V) + CAPPRM:ASME + FREQ:60HZ) + OILTYP:RIF , ((COOL:AIR + MOVOL:200V , FREQ:50HZ + MOVOL:400V , FREQ:60HZ + MOVOL:460V) + CAPPRM:MHLW , (COOL:AIR + MOVOL:230V , MOVOL:460V) + (MODEL:GA75VP_16 , MODEL:GA90VP_16) + CAPPRM:ASME + FREQ:60HZ) + OILTYP:RXD

Ref	Part Number	Qty	Name	Validity
1085	8202 1251 78	1	QUICK COUPLING	**(02/02/2017 - 12/07/2017)** ((MODEL:GA110VP_16 + MOVOL:380V + OILTYP:RIF , MODEL:GA75VP_16 + MOVOL:460V + OILTYP:RXD) + CAPPRM:ASME + FREQ:60HZ , CAPPRM:CE + FREQ:50HZ + MOVOL:400V + OILTYP:RIF) + COOL:AIR **(13/07/2017 - 29/10/2017)** ((((CAPPRM:AS1210 , CAPPRM:CE , CAPPRM:MOM) + MOVOL:400V , CAPPRM:CE + MOVOL:500V) + FREQ:50HZ , (MOVOL:380V , MOVOL:460V) + CAPPRM:ASME + FREQ:60HZ) + OILTYP:RIF , (((FREQ:50HZ , FREQ:60HZ) + MOVOL:200V , FREQ:50HZ + MOVOL:400V , FREQ:60HZ + MOVOL:460V) + CAPPRM:MHLW , (MODEL:GA75VP_16 , MODEL:GA90VP_16) + (MOVOL:230V , MOVOL:460V) + CAPPRM:ASME + FREQ:60HZ) + OILTYP:RXD) + COOL:AIR **(30/10/2017 - 11/02/2018)** ((((CAPPRM:AS1210 , CAPPRM:CE , CAPPRM:MOM) + MOVOL:400V , CAPPRM:CE + MOVOL:500V) + FREQ:50HZ , (MOVOL:380V , MOVOL:460V) + CAPPRM:ASME + FREQ:60HZ) + OILTYP:RIF , (((MOVOL:200V , MOVOL:400V) + FREQ:50HZ , (MOVOL:200V , MOVOL:460V) + FREQ:60HZ + MODEL:GA110VP_16) + CAPPRM:MHLW , (MODEL:GA75VP_16 , MODEL:GA90VP_16) + (MOVOL:230V , MOVOL:460V) + CAPPRM:ASME + FREQ:60HZ) + OILTYP:RXD) + COOL:AIR **(12/02/2018 - 20/08/2018)** ((((CAPPRM:AS1210 , CAPPRM:CE , CAPPRM:MOM) + MOVOL:400V , CAPPRM:CE + MOVOL:500V) + FREQ:50HZ , (MOVOL:380V , MOVOL:460V) + CAPPRM:ASME + FREQ:60HZ) + OILTYP:RIF , (((FREQ:50HZ , FREQ:60HZ) + MOVOL:200V , FREQ:50HZ + MOVOL:400V , FREQ:60HZ + MOVOL:460V) + CAPPRM:MHLW , (MODEL:GA75VP_16 , MODEL:GA90VP_16) + (MOVOL:230V , MOVOL:460V) + CAPPRM:ASME + FREQ:60HZ) + OILTYP:RXD) + COOL:AIR **(21/08/2018 - 04/12/2018)** ((((CAPPRM:AS1210 , CAPPRM:CE , CAPPRM:MOM) + MOVOL:400V , CAPPRM:CE + MOVOL:500V) + FREQ:50HZ , (MOVOL:380V , MOVOL:460V) + CAPPRM:ASME + FREQ:60HZ) + OILTYP:RIF , CAPPRM:MHLW + MOVOL:200V + OILTYP:RXD) + COOL:AIR , (((COOL:AIR + MOVOL:230V , MOVOL:460V) + (MODEL:GA75VP_16 , MODEL:GA90VP_16) + CAPPRM:ASME , CAPPRM:MHLW + MOVOL:460V) + FREQ:60HZ , CAPPRM:MHLW + FREQ:50HZ + MOVOL:400V) + OILTYP:RXD **(05/12/2018 - 30/12/2027)** **(31/12/2027 - ...)** (((CAPPRM:AS1210 , CAPPRM:CE , CAPPRM:MOM) + MOVOL:400V , CAPPRM:CE + COOL:AIR + MOVOL:500V) + FREQ:50HZ , (MOVOL:380V , MOVOL:460V) + CAPPRM:ASME + FREQ:60HZ) + OILTYP:RIF , (((CAPPRM:ASME + FREQ:60HZ + MOVOL:230V , CAPPRM:MHLW + MOVOL:200V) + COOL:AIR , CAPPRM:ASME + FREQ:60HZ + MOVOL:460V) + (MODEL:GA75VP_16 , MODEL:GA90VP_16) , (FREQ:50HZ + MOVOL:400V , FREQ:60HZ + MOVOL:460V) + CAPPRM:MHLW) + OILTYP:RXD

Legend:

CAPPRM:AS1210 - Component approval mechanical:AS1210
CAPPRM:ASME - Component approval mechanical:ASME
CAPPRM:CE - Component approval mechanical:CE
CAPPRM:MHLW - Component approval mechanical:MHLW
CAPPRM:MOM - Component approval mechanical:MOM
COOL:AIR - Cooling:Air cooled
COOL:WATER - Cooling:Water cooled
FREQ:50HZ - Frequency:50 Hz
FREQ:60HZ - Frequency:60 Hz
MODEL:GA110VP_16 - Model:GA 110VSD+
MODEL:GA75VP_16 - Model:GA 75VSD+
MODEL:GA90VP_16 - Model:GA 90VSD+
MOVOL:200V - Supply voltage:200 V
MOVOL:230V - Supply voltage:230 V
MOVOL:380V - Supply voltage:380 V
MOVOL:400V - Supply voltage:400 V
MOVOL:460V - Supply voltage:460 V
MOVOL:500V - Supply voltage:500 V
OILTYP:RIF - Oil type:Roto inject fluid oil
OILTYP:RXD - Oil type:Roto-Xtend Duty Fluid

6.4 - Air receiver AS1210, CE, MOM - RIF Oil, MHLW - RXD Oil

(((CAPPRM:AS1210 , CAPPRM:CE , CAPPRM:MOM) + MOVOL:400V , CAPPRM:CE + COOL:AIR + MOVOL:500V) + FREQ:50HZ , (MOVOL:380V , MOVOL:460V) + CAPPRM:ASME + FREQ:60HZ) + OILTYP:RIF , ((COOL:AIR + MOVOL:200V , FREQ:50HZ + MOVOL:400V , FREQ:60HZ + MOVOL:460V) + CAPPRM:MHLW , (COOL:AIR + MOVOL:230V , MOVOL:460V) + (MODEL:GA75VP_16 , MODEL:GA90VP_16) + CAPPRM:ASME + FREQ:60HZ) + OILTYP:RXD

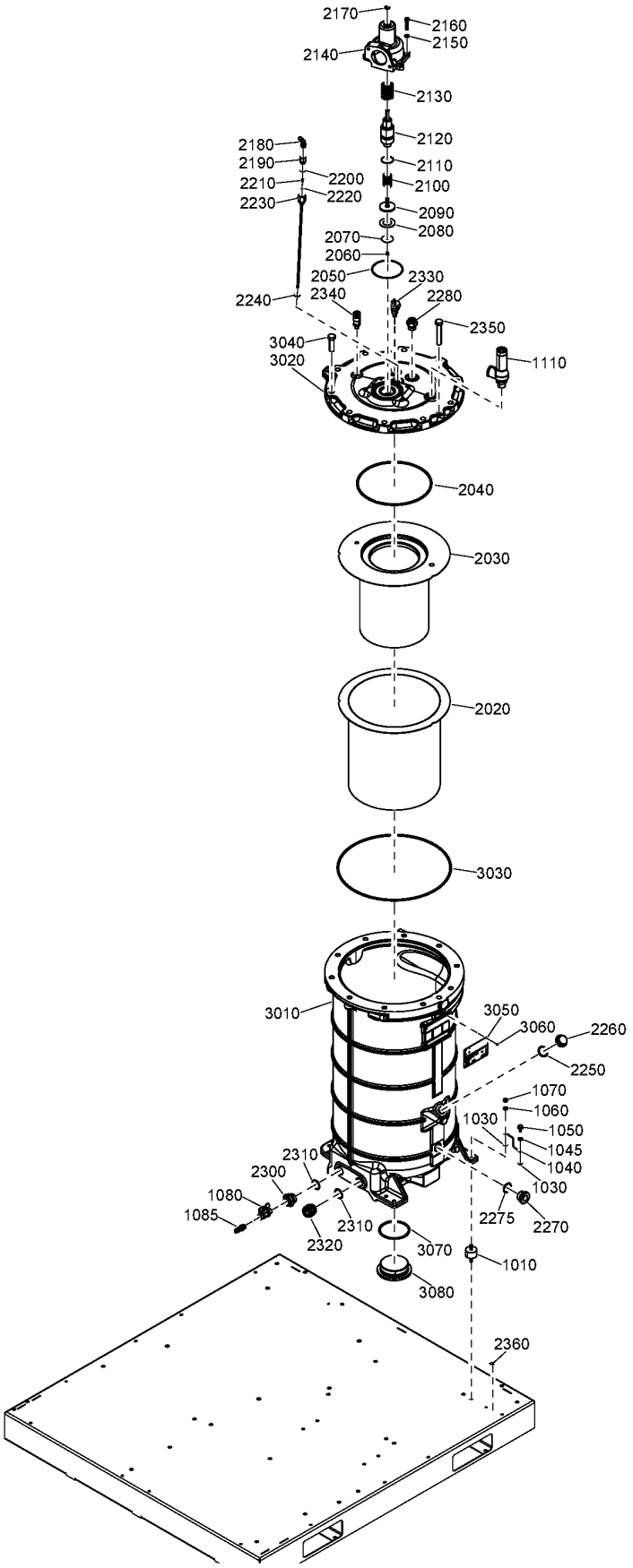

6.4 - Air receiver AS1210, CE, MOM - RIF Oil, MHLW - RXD Oil

(((CAPPRM:AS1210 , CAPPRM:CE , CAPPRM:MOM) + MOVOL:400V , CAPPRM:CE + COOL:AIR + MOVOL:500V) + FREQ:50HZ , (MOVOL:380V , MOVOL:460V) + CAPPRM:ASME + FREQ:60HZ) + OILTYP:RIF , ((COOL:AIR + MOVOL:200V , FREQ:50HZ + MOVOL:400V , FREQ:60HZ + MOVOL:460V) + CAPPRM:MHLW , (COOL:AIR + MOVOL:230V , MOVOL:460V) + (MODEL:GA75VP_16 , MODEL:GA90VP_16) + CAPPRM:ASME + FREQ:60HZ) + OILTYP:RXD

Ref	Part Number	Qty	Name	Validity
1110	1202 5401 00	1	SAFETY VALVE	**(09/03/2017 - 12/07/2017)** ((MODEL:GA110VP_16 + MOVOL:380V + OILTYP:RIF , MODEL:GA75VP_16 + MOVOL:460V + OILTYP:RXD) + CAPPRM:ASME + FREQ:60HZ , CAPPRM:CE + FREQ:50HZ + MOVOL:400V + OILTYP:RIF) + COOL:AIR **(13/07/2017 - 19/07/2017)** (((MOVOL:230V , MOVOL:460V) + MODEL:GA75VP_16 + OILTYP:RXD , (MOVOL:380V , MOVOL:460V) + MODEL:GA110VP_16 + OILTYP:RIF) + CAPPRM:ASME + FREQ:60HZ , (MOVOL:400V , MOVOL:500V) + CAPPRM:CE + FREQ:50HZ + OILTYP:RIF) + COOL:AIR **(20/07/2017 - 29/10/2017)** ((((CAPPRM:AS1210 , CAPPRM:CE , CAPPRM:MOM) + MOVOL:400V , CAPPRM:CE + MOVOL:500V) + FREQ:50HZ , (MOVOL:380V , MOVOL:460V) + CAPPRM:ASME + FREQ:60HZ) + OILTYP:RIF , (((FREQ:50HZ , FREQ:60HZ) + MOVOL:200V , FREQ:50HZ + MOVOL:400V , FREQ:60HZ + MOVOL:460V) + CAPPRM:MHLW , (MODEL:GA75VP_16 , MODEL:GA90VP_16) + (MOVOL:230V , MOVOL:460V) + CAPPRM:ASME + FREQ:60HZ) + OILTYP:RXD) + COOL:AIR **(30/10/2017 - 20/08/2018)** ((((CAPPRM:AS1210 , CAPPRM:CE , CAPPRM:MOM) + MOVOL:400V , CAPPRM:CE + MOVOL:500V) + OILTYP:RIF , (MOVOL:200V , MOVOL:400V) + CAPPRM:MHLW + OILTYP:RXD) + FREQ:50HZ , (MOVOL:200V , MOVOL:460V) + CAPPRM:MHLW + FREQ:60HZ + MODEL:GA110VP_16 + OILTYP:RXD) + COOL:AIR **(21/08/2018 - 04/12/2018)** ((((CAPPRM:AS1210 , CAPPRM:CE , CAPPRM:MOM) + OILTYP:RIF , CAPPRM:MHLW + OILTYP:RXD) + MOVOL:400V , CAPPRM:CE + MOVOL:500V + OILTYP:RIF , CAPPRM:MHLW + MOVOL:200V + OILTYP:RXD) + COOL:AIR , CAPPRM:MHLW + COOL:WATER + MOVOL:400V + OILTYP:RXD) + FREQ:50HZ , (COOL:AIR + MOVOL:200V , MOVOL:460V) + CAPPRM:MHLW + FREQ:60HZ + MODEL:GA110VP_16 + OILTYP:RXD **(05/12/2018 - 30/12/2027)** (((CAPPRM:AS1210 , CAPPRM:CE , CAPPRM:MOM) + MOVOL:400V , CAPPRM:CE + COOL:AIR + MOVOL:500V) + OILTYP:RIF , (COOL:AIR + MOVOL:200V , MOVOL:400V) + CAPPRM:MHLW + OILTYP:RXD) + FREQ:50HZ , (COOL:AIR + MOVOL:200V , MOVOL:460V) + CAPPRM:MHLW + FREQ:60HZ + MODEL:GA110VP_16 + OILTYP:RXD **(31/12/2027 - ...)** (((CAPPRM:AS1210 , CAPPRM:CE , CAPPRM:MOM) + MOVOL:400V , CAPPRM:CE + COOL:AIR + MOVOL:500V) + OILTYP:RIF , ((MODEL:GA75VP_16 , MODEL:GA90VP_16) + COOL:AIR + MOVOL:200V , MOVOL:400V) + CAPPRM:MHLW + OILTYP:RXD) + FREQ:50HZ , CAPPRM:MHLW + FREQ:60HZ + MODEL:GA110VP_16 + MOVOL:460V + OILTYP:RXD
	• 5009 9008 00	0	BAUTEILPRUFUNG (SAFETY VALV	
1110	1649 8003 90	1	SAFETY VALVE	**(30/10/2017 - 20/08/2018)** (((MODEL:GA75VP_16 , MODEL:GA90VP_16) + (MOVOL:230V , MOVOL:460V) + OILTYP:RXD , (MOVOL:380V , MOVOL:460V) + OILTYP:RIF) + CAPPRM:ASME , (MOVOL:200V , MOVOL:460V) + CAPPRM:MHLW + OILTYP:RXD) + COOL:AIR + FREQ:60HZ **(21/08/2018 - 04/12/2018)** (((COOL:AIR + MOVOL:230V , MOVOL:460V) + (MODEL:GA75VP_16 , MODEL:GA90VP_16) + CAPPRM:ASME , CAPPRM:MHLW + MOVOL:460V) + OILTYP:RXD , ((MOVOL:380V , MOVOL:460V) + CAPPRM:ASME + OILTYP:RIF , CAPPRM:MHLW + MOVOL:200V + OILTYP:RXD) + COOL:AIR) + FREQ:60HZ **(05/12/2018 - 30/12/2027)** (((COOL:AIR + MOVOL:200V , MOVOL:460V) + CAPPRM:MHLW , (COOL:AIR + MOVOL:230V , MOVOL:460V) + (MODEL:GA75VP_16 , MODEL:GA90VP_16) + CAPPRM:ASME) + OILTYP:RXD , (MOVOL:380V , MOVOL:460V) + CAPPRM:ASME + OILTYP:RIF) + FREQ:60HZ **(31/12/2027 - ...)** ((((COOL:AIR + MOVOL:230V , MOVOL:460V) + CAPPRM:ASME , CAPPRM:MHLW + COOL:AIR + MOVOL:200V) + (MODEL:GA75VP_16 , MODEL:GA90VP_16) , CAPPRM:MHLW + MOVOL:460V) + OILTYP:RXD , (MOVOL:380V , MOVOL:460V) + CAPPRM:ASME + OILTYP:RIF) + FREQ:60HZ

Legend:

CAPPRM:AS1210 - Component approval mechanical:AS1210
CAPPRM:ASME - Component approval mechanical:ASME
CAPPRM:CE - Component approval mechanical:CE
CAPPRM:MHLW - Component approval mechanical:MHLW
CAPPRM:MOM - Component approval mechanical:MOM
COOL:AIR - Cooling:Air cooled
COOL:WATER - Cooling:Water cooled
FREQ:50HZ - Frequency:50 Hz
FREQ:60HZ - Frequency:60 Hz
MODEL:GA110VP_16 - Model:GA 110VSD+
MODEL:GA75VP_16 - Model:GA 75VSD+
MODEL:GA90VP_16 - Model:GA 90VSD+
MOVOL:200V - Supply voltage:200 V
MOVOL:230V - Supply voltage:230 V
MOVOL:380V - Supply voltage:380 V
MOVOL:400V - Supply voltage:400 V
MOVOL:460V - Supply voltage:460 V
MOVOL:500V - Supply voltage:500 V
OILTYP:RIF - Oil type:Roto inject fluid oil
OILTYP:RXD - Oil type:Roto-Xtend Duty Fluid

6.4 - Air receiver AS1210, CE, MOM - RIF Oil, MHLW - RXD Oil

(((CAPPRM:AS1210 , CAPPRM:CE , CAPPRM:MOM) + MOVOL:400V , CAPPRM:CE + COOL:AIR + MOVOL:500V) + FREQ:50HZ , (MOVOL:380V , MOVOL:460V) + CAPPRM:ASME + FREQ:60HZ) + OILTYP:RIF , ((COOL:AIR + MOVOL:200V , FREQ:50HZ + MOVOL:400V , FREQ:60HZ + MOVOL:460V) + CAPPRM:MHLW , (COOL:AIR + MOVOL:230V , MOVOL:460V) + (MODEL:GA75VP_16 , MODEL:GA90VP_16) + CAPPRM:ASME + FREQ:60HZ) + OILTYP:RXD

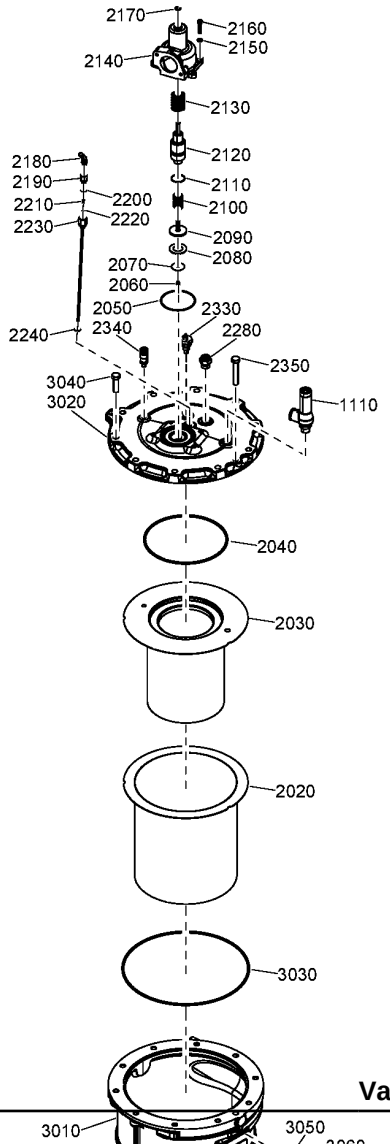

Ref	Part Number	Qty	Name	Validity
	1649 8002 91	1	VESSEL ASSEMBLY	**(20/07/2017 - 20/08/2018)** ((MOVOL:200V , MOVOL:400V) + FREQ:50HZ , (MOVOL:200V , MOVOL:460V) + FREQ:60HZ) + CAPPRM:MHLW + COOL:AIR + OILTYP:RXD **(21/08/2018 - 30/12/2027)** (COOL:AIR + MOVOL:200V , FREQ:50HZ + MOVOL:400V , FREQ:60HZ + MOVOL:460V) + CAPPRM:MHLW + OILTYP:RXD **(31/12/2027 - ...)** ((MODEL:GA75VP_16 , MODEL:GA90VP_16) + COOL:AIR + MOVOL:200V , FREQ:50HZ + MOVOL:400V , FREQ:60HZ + MOVOL:460V) + CAPPRM:MHLW + OILTYP:RXD
	1649 8002 89			**(20/07/2017 - 04/12/2018)** CAPPRM:AS1210 + COOL:AIR + FREQ:50HZ + MOVOL:400V + OILTYP:RIF **(05/12/2018 - ...)** CAPPRM:AS1210 + FREQ:50HZ + MOVOL:400V + OILTYP:RIF
	1649 8002 88			**(09/03/2017 - 12/07/2017)** ((MODEL:GA110VP_16 + MOVOL:380V + OILTYP:RIF , MODEL:GA75VP_16 + MOVOL:460V + OILTYP:RXD) + CAPPRM:ASME + FREQ:60HZ , CAPPRM:CE + FREQ:50HZ + MOVOL:400V + OILTYP:RIF) + COOL:AIR **(13/07/2017 - 19/07/2017)** (((MOVOL:230V , MOVOL:460V) + MODEL:GA75VP_16 + OILTYP:RXD , (MOVOL:380V , MOVOL:460V) + MODEL:GA110VP_16 + OILTYP:RIF) + CAPPRM:ASME + FREQ:60HZ , (MOVOL:400V , MOVOL:500V) + CAPPRM:CE + FREQ:50HZ + OILTYP:RIF) + COOL:AIR **(20/07/2017 - 20/08/2018)** (((MODEL:GA75VP_16 , MODEL:GA90VP_16) + (MOVOL:230V , MOVOL:460V) + OILTYP:RXD , (MOVOL:380V , MOVOL:460V) + OILTYP:RIF) + CAPPRM:ASME + FREQ:60HZ , (MOVOL:400V , MOVOL:500V) + CAPPRM:CE + FREQ:50HZ + OILTYP:RIF) + COOL:AIR **(21/08/2018 - 04/12/2018)** ((MOVOL:380V , MOVOL:460V) + CAPPRM:ASME + FREQ:60HZ , (MOVOL:400V , MOVOL:500V) + CAPPRM:CE + FREQ:50HZ) + COOL:AIR + OILTYP:RIF , (COOL:AIR + MOVOL:230V , MOVOL:460V) + (MODEL:GA75VP_16 , MODEL:GA90VP_16) + CAPPRM:ASME + FREQ:60HZ + OILTYP:RXD **(05/12/2018 - ...)** ((COOL:AIR + MOVOL:230V , MOVOL:460V) + (MODEL:GA75VP_16 , MODEL:GA90VP_16) + OILTYP:RXD , (MOVOL:380V , MOVOL:460V) + OILTYP:RIF) + CAPPRM:ASME + FREQ:60HZ , (COOL:AIR + MOVOL:500V , MOVOL:400V) +

6.4 - Air receiver AS1210, CE, MOM - RIF Oil, MHLW - RXD Oil

(((CAPPRM:AS1210 , CAPPRM:CE , CAPPRM:MOM) + MOVOL:400V , CAPPRM:CE + COOL:AIR + MOVOL:500V) + FREQ:50HZ , (MOVOL:380V , MOVOL:460V) + CAPPRM:ASME + FREQ:60HZ) + OILTYP:RIF , ((COOL:AIR + MOVOL:200V , FREQ:50HZ + MOVOL:400V , FREQ:60HZ + MOVOL:460V) + CAPPRM:MHLW , (COOL:AIR + MOVOL:230V , MOVOL:460V) + (MODEL:GA75VP_16 , MODEL:GA90VP_16) + CAPPRM:ASME + FREQ:60HZ) + OILTYP:RXD

Ref	Part Number	Qty	Name	Validity
	Substituted by:	1092 2040 98 - GA75-110VSD+ VESSEL SHIELD (quantity: 1)		
2030	• ~~1649 8001 41~~	1	OIL SEPARATOR	**(09/03/2017 - 12/07/2017)** ((MODEL:GA110VP_16 + MOVOL:380V + OILTYP:RIF , MODEL:GA75VP_16 + MOVOL:460V + OILTYP:RXD) + CAPPRM:ASME + FREQ:60HZ , CAPPRM:CE + FREQ:50HZ + MOVOL:400V + OILTYP:RIF) + COOL:AIR **(13/07/2017 - 19/07/2017)** (((MOVOL:230V , MOVOL:460V) + MODEL:GA75VP_16 + OILTYP:RXD , (MOVOL:380V , MOVOL:460V) + MODEL:GA110VP_16 + OILTYP:RIF) + CAPPRM:ASME + FREQ:60HZ , (MOVOL:400V , MOVOL:500V) + CAPPRM:CE + FREQ:50HZ + OILTYP:RIF) + COOL:AIR **(20/07/2017 - 20/08/2018)** ((((CAPPRM:AS1210 , CAPPRM:CE , CAPPRM:MOM) + MOVOL:400V , CAPPRM:CE + MOVOL:500V) + FREQ:50HZ , (MOVOL:380V , MOVOL:460V) + CAPPRM:ASME + FREQ:60HZ) + OILTYP:RIF , (((FREQ:50HZ , FREQ:60HZ) + MOVOL:200V , FREQ:50HZ + MOVOL:400V , FREQ:60HZ + MOVOL:460V) + CAPPRM:MHLW , (MODEL:GA75VP_16 , MODEL:GA90VP_16) + (MOVOL:230V , MOVOL:460V) + CAPPRM:ASME + FREQ:60HZ) + OILTYP:RXD) + COOL:AIR **(21/08/2018 - 04/12/2018)** ((((CAPPRM:AS1210 , CAPPRM:CE , CAPPRM:MOM) + MOVOL:400V , CAPPRM:CE + MOVOL:500V) + FREQ:50HZ , (MOVOL:380V , MOVOL:460V) + CAPPRM:ASME + FREQ:60HZ) + OILTYP:RIF , CAPPRM:MHLW + MOVOL:200V + OILTYP:RXD) + COOL:AIR , (((COOL:AIR + MOVOL:230V , MOVOL:460V) + (MODEL:GA75VP_16 , MODEL:GA90VP_16) + CAPPRM:ASME , CAPPRM:MHLW + MOVOL:460V) + FREQ:60HZ , CAPPRM:MHLW + FREQ:50HZ + MOVOL:400V) + OILTYP:RXD **(05/12/2018 - 30/12/2027)** **(31/12/2027 - ...)** (((CAPPRM:AS1210 , CAPPRM:CE , CAPPRM:MOM) + MOVOL:400V , CAPPRM:CE + COOL:AIR + MOVOL:500V) + FREQ:50HZ , (MOVOL:380V , MOVOL:460V) + CAPPRM:ASME + FREQ:60HZ) + OILTYP:RIF , (((CAPPRM:ASME + FREQ:60HZ + MOVOL:230V , CAPPRM:MHLW + MOVOL:200V) + COOL:AIR , CAPPRM:ASME + FREQ:60HZ + MOVOL:460V) + (MODEL:GA75VP_16 , MODEL:GA90VP_16) , (FREQ:50HZ + MOVOL:400V , FREQ:60HZ + MOVOL:460V) + CAPPRM:MHLW) + OILTYP:RXD
	Substituted by:	1630 1708 01 - SEPARATOR ELEMENT (quantity: 1)		

Legend:

CAPPRM:AS1210 - Component approval mechanical:AS1210
CAPPRM:ASME - Component approval mechanical:ASME
CAPPRM:CE - Component approval mechanical:CE
CAPPRM:MHLW - Component approval mechanical:MHLW
CAPPRM:MOM - Component approval mechanical:MOM
COOL:AIR - Cooling:Air cooled
COOL:WATER - Cooling:Water cooled
FREQ:50HZ - Frequency:50 Hz
FREQ:60HZ - Frequency:60 Hz
MODEL:GA110VP_16 - Model:GA 110VSD+
MODEL:GA75VP_16 - Model:GA 75VSD+
MODEL:GA90VP_16 - Model:GA 90VSD+
MOVOL:200V - Supply voltage:200 V
MOVOL:230V - Supply voltage:230 V
MOVOL:380V - Supply voltage:380 V
MOVOL:400V - Supply voltage:400 V
MOVOL:460V - Supply voltage:460 V
MOVOL:500V - Supply voltage:500 V
OILTYP:RIF - Oil type:Roto inject fluid oil
OILTYP:RXD - Oil type:Roto-Xtend Duty Fluid

6.4 - Air receiver AS1210, CE, MOM - RIF Oil, MHLW - RXD Oil

(((CAPPRM:AS1210 , CAPPRM:CE , CAPPRM:MOM) + MOVOL:400V , CAPPRM:CE + COOL:AIR + MOVOL:500V) + FREQ:50HZ , (MOVOL:380V , MOVOL:460V) + CAPPRM:ASME + FREQ:60HZ) + OILTYP:RIF , ((COOL:AIR + MOVOL:200V , FREQ:50HZ + MOVOL:400V , FREQ:60HZ + MOVOL:460V) + CAPPRM:MHLW , (COOL:AIR + MOVOL:230V , MOVOL:460V) + (MODEL:GA75VP_16 , MODEL:GA90VP_16) + CAPPRM:ASME + FREQ:60HZ) + OILTYP:RXD

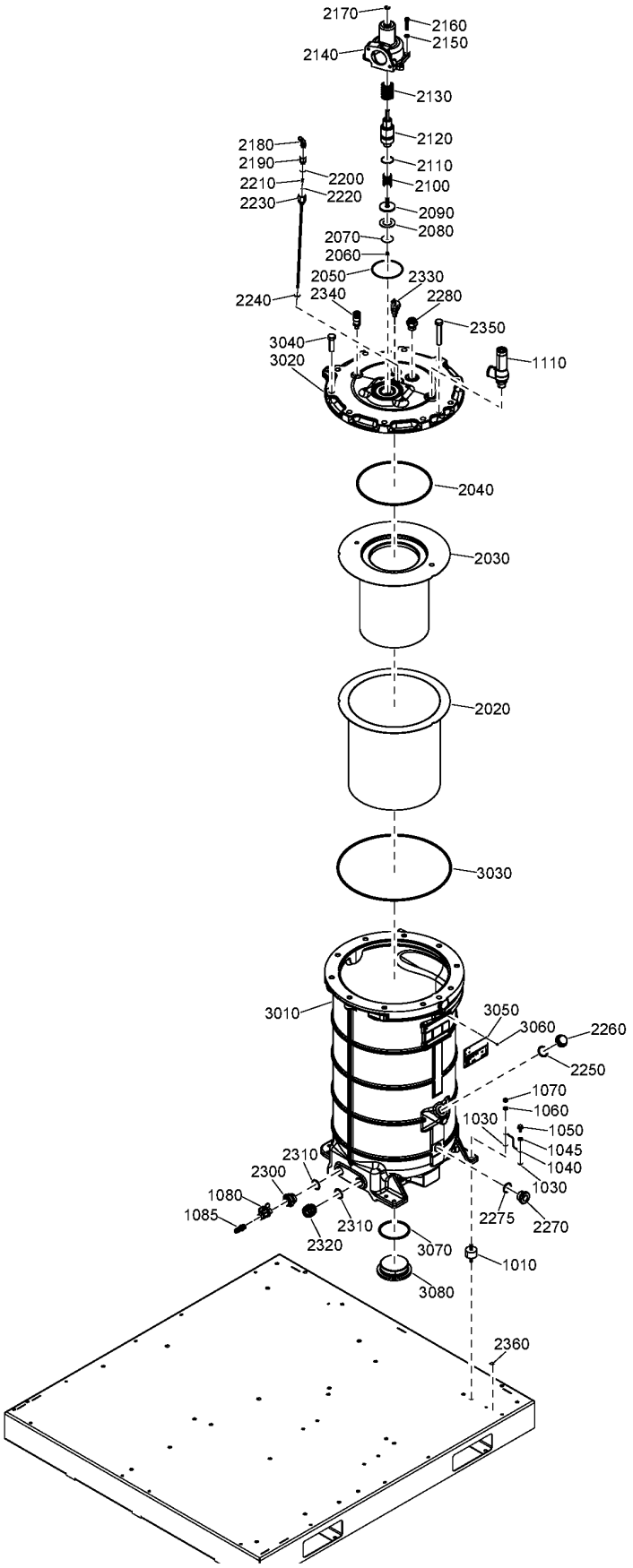

Ref	Part Number	Qty	Name	Validity
2040 •	0663 7170 00	1	O-RING	**(09/03/2017 - 12/07/2017)** ((MODEL:GA110VP_16 + MOVOL:380V + OILTYP:RIF , MODEL:GA75VP_16 + MOVOL:460V + OILTYP:RXD) + CAPPRM:ASME + FREQ:60HZ , CAPPRM:CE + FREQ:50HZ + MOVOL:400V + OILTYP:RIF) + COOL:AIR **(13/07/2017 - 19/07/2017)** (((MOVOL:230V , MOVOL:460V) + MODEL:GA75VP_16 + OILTYP:RXD , (MOVOL:380V , MOVOL:460V) + MODEL:GA110VP_16 + OILTYP:RIF) + CAPPRM:ASME + FREQ:60HZ , (MOVOL:400V , MOVOL:500V) + CAPPRM:CE + FREQ:50HZ + OILTYP:RIF) + COOL:AIR **(20/07/2017 - 20/08/2018)** ((((CAPPRM:AS1210 , CAPPRM:CE , CAPPRM:MOM) + MOVOL:400V , CAPPRM:CE + MOVOL:500V) + FREQ:50HZ , (MOVOL:380V , MOVOL:460V) + CAPPRM:ASME + FREQ:60HZ) + OILTYP:RIF , (((FREQ:50HZ , FREQ:60HZ) + MOVOL:200V , FREQ:50HZ + MOVOL:400V , FREQ:60HZ + MOVOL:460V) + CAPPRM:MHLW , (MODEL:GA75VP_16 , MODEL:GA90VP_16) + (MOVOL:230V , MOVOL:460V) + CAPPRM:ASME + FREQ:60HZ) + OILTYP:RXD) + COOL:AIR **(21/08/2018 - 04/12/2018)** ((((CAPPRM:AS1210 , CAPPRM:CE , CAPPRM:MOM) + MOVOL:400V , CAPPRM:CE + MOVOL:500V) + FREQ:50HZ , (MOVOL:380V , MOVOL:460V) + CAPPRM:ASME + FREQ:60HZ) + OILTYP:RIF , CAPPRM:MHLW + MOVOL:200V + OILTYP:RXD) + COOL:AIR , (((COOL:AIR + MOVOL:230V , MOVOL:460V) + (MODEL:GA75VP_16 , MODEL:GA90VP_16) + CAPPRM:ASME , CAPPRM:MHLW + MOVOL:460V) + FREQ:60HZ , CAPPRM:MHLW + FREQ:50HZ + MOVOL:400V) + OILTYP:RXD **(05/12/2018 - 30/12/2027)** **(31/12/2027 - ...)** (((CAPPRM:AS1210 , CAPPRM:CE , CAPPRM:MOM) + MOVOL:400V , CAPPRM:CE + COOL:AIR + MOVOL:500V) + FREQ:50HZ , (MOVOL:380V , MOVOL:460V) + CAPPRM:ASME + FREQ:60HZ) + OILTYP:RIF , (((CAPPRM:ASME + FREQ:60HZ + MOVOL:230V , CAPPRM:MHLW + MOVOL:200V) + COOL:AIR , CAPPRM:ASME + FREQ:60HZ + MOVOL:460V) + (MODEL:GA75VP_16 , MODEL:GA90VP_16) , (FREQ:50HZ + MOVOL:400V , FREQ:60HZ + MOVOL:460V) + CAPPRM:MHLW) + OILTYP:RXD
2050 •	0663 2116 70	1	O-RING	**(09/03/2017 - 12/07/2017)** ((MODEL:GA110VP_16 + MOVOL:380V + OILTYP:RIF , MODEL:GA75VP_16 + MOVOL:460V + OILTYP:RXD) + CAPPRM:ASME + FREQ:60HZ , CAPPRM:CE + FREQ:50HZ + MOVOL:400V + OILTYP:RIF) + COOL:AIR **(13/07/2017 - 19/07/2017)** (((MOVOL:230V , MOVOL:460V) + MODEL:GA75VP_16 + OILTYP:RXD , (MOVOL:380V , MOVOL:460V) + MODEL:GA110VP_16 + OILTYP:RIF) + CAPPRM:ASME + FREQ:60HZ , (MOVOL:400V , MOVOL:500V) + CAPPRM:CE + FREQ:50HZ + OILTYP:RIF) + COOL:AIR **(20/07/2017 - 20/08/2018)** ((((CAPPRM:AS1210 , CAPPRM:CE , CAPPRM:MOM) + MOVOL:400V , CAPPRM:CE + MOVOL:500V) + FREQ:50HZ , (MOVOL:380V , MOVOL:460V) + CAPPRM:ASME + FREQ:60HZ) + OILTYP:RIF , (((FREQ:50HZ , FREQ:60HZ) + MOVOL:200V , FREQ:50HZ + MOVOL:400V , FREQ:60HZ + MOVOL:460V) + CAPPRM:MHLW , (MODEL:GA75VP_16 , MODEL:GA90VP_16) + (MOVOL:230V , MOVOL:460V) + CAPPRM:ASME + FREQ:60HZ) + OILTYP:RXD) + COOL:AIR **(21/08/2018 - 04/12/2018)** ((((CAPPRM:AS1210 , CAPPRM:CE , CAPPRM:MOM) + MOVOL:400V , CAPPRM:CE + MOVOL:500V) + FREQ:50HZ , (MOVOL:380V , MOVOL:460V) + CAPPRM:ASME + FREQ:60HZ) + OILTYP:RIF , CAPPRM:MHLW + MOVOL:200V + OILTYP:RXD) + COOL:AIR , (((COOL:AIR + MOVOL:230V , MOVOL:460V) + (MODEL:GA75VP_16 , MODEL:GA90VP_16) + CAPPRM:ASME , CAPPRM:MHLW + MOVOL:460V) + FREQ:60HZ , CAPPRM:MHLW + FREQ:50HZ + MOVOL:400V) + OILTYP:RXD **(05/12/2018 - 30/12/2027)** **(31/12/2027 - ...)** (((CAPPRM:AS1210 , CAPPRM:CE , CAPPRM:MOM) + MOVOL:400V , CAPPRM:CE + COOL:AIR + MOVOL:500V) + FREQ:50HZ , (MOVOL:380V , MOVOL:460V) + CAPPRM:ASME + FREQ:60HZ) + OILTYP:RIF , (((CAPPRM:ASME + FREQ:60HZ + MOVOL:230V , CAPPRM:MHLW + MOVOL:200V) + COOL:AIR , CAPPRM:ASME + FREQ:60HZ + MOVOL:460V) + (MODEL:GA75VP_16 , MODEL:GA90VP_16) , (FREQ:50HZ + MOVOL:400V , FREQ:60HZ + MOVOL:460V) + CAPPRM:MHLW) + OILTYP:RXD

Legend:

CAPPRM:AS1210 - Component approval mechanical:AS1210
CAPPRM:ASME - Component approval mechanical:ASME
CAPPRM:CE - Component approval mechanical:CE
CAPPRM:MHLW - Component approval mechanical:MHLW
CAPPRM:MOM - Component approval mechanical:MOM
COOL:AIR - Cooling:Air cooled
COOL:WATER - Cooling:Water cooled
FREQ:50HZ - Frequency:50 Hz
FREQ:60HZ - Frequency:60 Hz
MODEL:GA110VP_16 - Model:GA 110VSD+
MODEL:GA75VP_16 - Model:GA 75VSD+
MODEL:GA90VP_16 - Model:GA 90VSD+
MOVOL:200V - Supply voltage:200 V
MOVOL:230V - Supply voltage:230 V
MOVOL:380V - Supply voltage:380 V
MOVOL:400V - Supply voltage:400 V
MOVOL:460V - Supply voltage:460 V
MOVOL:500V - Supply voltage:500 V
OILTYP:RIF - Oil type:Roto inject fluid oil
OILTYP:RXD - Oil type:Roto-Xtend Duty Fluid

6.4 - Air receiver AS1210, CE, MOM - RIF Oil, MHLW - RXD Oil

(((CAPPRM:AS1210 , CAPPRM:CE , CAPPRM:MOM) + MOVOL:400V , CAPPRM:CE + COOL:AIR + MOVOL:500V) + FREQ:50HZ , (MOVOL:380V , MOVOL:460V) + CAPPRM:ASME + FREQ:60HZ) + OILTYP:RIF , ((COOL:AIR + MOVOL:200V , FREQ:50HZ + MOVOL:400V , FREQ:60HZ + MOVOL:460V) + CAPPRM:MHLW , (COOL:AIR + MOVOL:230V , MOVOL:460V) + (MODEL:GA75VP_16 , MODEL:GA90VP_16) + CAPPRM:ASME + FREQ:60HZ) + OILTYP:RXD

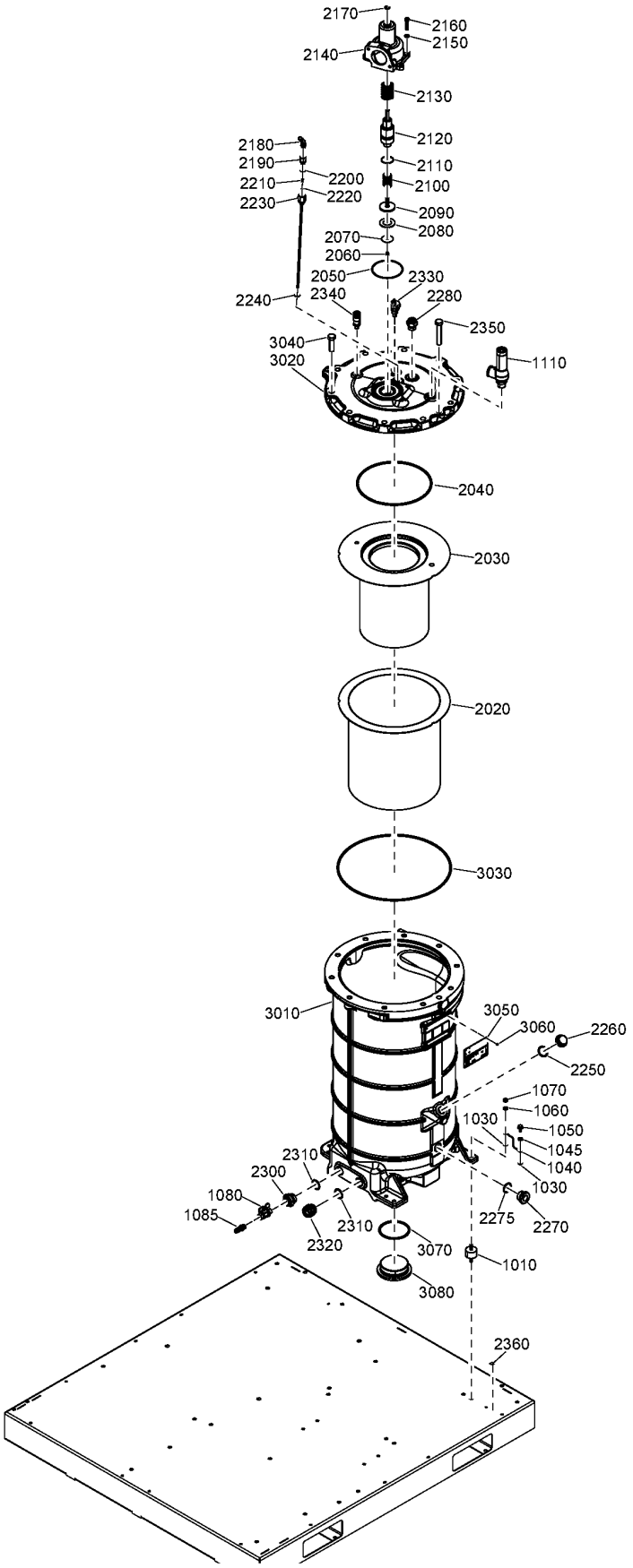

6.4 - Air receiver AS1210, CE, MOM - RIF Oil, MHLW - RXD Oil

(((CAPPRM:AS1210 , CAPPRM:CE , CAPPRM:MOM) + MOVOL:400V , CAPPRM:CE + COOL:AIR + MOVOL:500V) + FREQ:50HZ , (MOVOL:380V , MOVOL:460V) + CAPPRM:ASME + FREQ:60HZ) + OILTYP:RIF , ((COOL:AIR + MOVOL:200V , FREQ:50HZ + MOVOL:400V , FREQ:60HZ + MOVOL:460V) + CAPPRM:MHLW , (COOL:AIR + MOVOL:230V , MOVOL:460V) + (MODEL:GA75VP_16 , MODEL:GA90VP_16) + CAPPRM:ASME + FREQ:60HZ) + OILTYP:RXD

Ref	Part Number	Qty	Name	Validity
2060 •	0147 1244 03	1	HEXAGON BOLT	**(09/03/2017 - 12/07/2017)** ((MODEL:GA110VP_16 + MOVOL:380V + OILTYP:RIF , MODEL:GA75VP_16 + MOVOL:460V + OILTYP:RXD) + CAPPRM:ASME + FREQ:60HZ , CAPPRM:CE + FREQ:50HZ + MOVOL:400V + OILTYP:RIF) + COOL:AIR **(13/07/2017 - 19/07/2017)** (((MOVOL:230V , MOVOL:460V) + MODEL:GA75VP_16 + OILTYP:RXD , (MOVOL:380V , MOVOL:460V) + MODEL:GA110VP_16 + OILTYP:RIF) + CAPPRM:ASME + FREQ:60HZ , (MOVOL:400V , MOVOL:500V) + CAPPRM:CE + FREQ:50HZ + OILTYP:RIF) + COOL:AIR **(20/07/2017 - 20/08/2018)** ((((CAPPRM:AS1210 , CAPPRM:CE , CAPPRM:MOM) + MOVOL:400V , CAPPRM:CE + MOVOL:500V) + FREQ:50HZ , (MOVOL:380V , MOVOL:460V) + CAPPRM:ASME + FREQ:60HZ) + OILTYP:RIF , (((FREQ:50HZ , FREQ:60HZ) + MOVOL:200V , FREQ:50HZ + MOVOL:400V , FREQ:60HZ + MOVOL:460V) + CAPPRM:MHLW , (MODEL:GA75VP_16 , MODEL:GA90VP_16) + (MOVOL:230V , MOVOL:460V) + CAPPRM:ASME + FREQ:60HZ) + OILTYP:RXD) + COOL:AIR **(21/08/2018 - 04/12/2018)** ((((CAPPRM:AS1210 , CAPPRM:CE , CAPPRM:MOM) + MOVOL:400V , CAPPRM:CE + MOVOL:500V) + FREQ:50HZ , (MOVOL:380V , MOVOL:460V) + CAPPRM:ASME + FREQ:60HZ) + OILTYP:RIF , CAPPRM:MHLW + MOVOL:200V + OILTYP:RXD) + COOL:AIR , (((COOL:AIR + MOVOL:230V , MOVOL:460V) + (MODEL:GA75VP_16 , MODEL:GA90VP_16) + CAPPRM:ASME , CAPPRM:MHLW + MOVOL:460V) + FREQ:60HZ , CAPPRM:MHLW + FREQ:50HZ + MOVOL:400V) + OILTYP:RXD **(05/12/2018 - 30/12/2027)** **(31/12/2027 - ...)** (((CAPPRM:AS1210 , CAPPRM:CE , CAPPRM:MOM) + MOVOL:400V , CAPPRM:CE + COOL:AIR + MOVOL:500V) + FREQ:50HZ , (MOVOL:380V , MOVOL:460V) + CAPPRM:ASME + FREQ:60HZ) + OILTYP:RIF , (((CAPPRM:ASME + FREQ:60HZ + MOVOL:230V , CAPPRM:MHLW + MOVOL:200V) + COOL:AIR , CAPPRM:ASME + FREQ:60HZ + MOVOL:460V) + (MODEL:GA75VP_16 , MODEL:GA90VP_16) , (FREQ:50HZ + MOVOL:400V , FREQ:60HZ + MOVOL:460V) + CAPPRM:MHLW) + OILTYP:RXD
2070 •	1613 3222 00	1	WASHER	**(09/03/2017 - 12/07/2017)** ((MODEL:GA110VP_16 + MOVOL:380V + OILTYP:RIF , MODEL:GA75VP_16 + MOVOL:460V + OILTYP:RXD) + CAPPRM:ASME + FREQ:60HZ , CAPPRM:CE + FREQ:50HZ + MOVOL:400V + OILTYP:RIF) + COOL:AIR **(13/07/2017 - 19/07/2017)** (((MOVOL:230V , MOVOL:460V) + MODEL:GA75VP_16 + OILTYP:RXD , (MOVOL:380V , MOVOL:460V) + MODEL:GA110VP_16 + OILTYP:RIF) + CAPPRM:ASME + FREQ:60HZ , (MOVOL:400V , MOVOL:500V) + CAPPRM:CE + FREQ:50HZ + OILTYP:RIF) + COOL:AIR **(20/07/2017 - 20/08/2018)** ((((CAPPRM:AS1210 , CAPPRM:CE , CAPPRM:MOM) + MOVOL:400V , CAPPRM:CE + MOVOL:500V) + FREQ:50HZ , (MOVOL:380V , MOVOL:460V) + CAPPRM:ASME + FREQ:60HZ) + OILTYP:RIF , (((FREQ:50HZ , FREQ:60HZ) + MOVOL:200V , FREQ:50HZ + MOVOL:400V , FREQ:60HZ + MOVOL:460V) + CAPPRM:MHLW , (MODEL:GA75VP_16 , MODEL:GA90VP_16) + (MOVOL:230V , MOVOL:460V) + CAPPRM:ASME + FREQ:60HZ) + OILTYP:RXD) + COOL:AIR **(21/08/2018 - 04/12/2018)** ((((CAPPRM:AS1210 , CAPPRM:CE , CAPPRM:MOM) + MOVOL:400V , CAPPRM:CE + MOVOL:500V) + FREQ:50HZ , (MOVOL:380V , MOVOL:460V) + CAPPRM:ASME + FREQ:60HZ) + OILTYP:RIF , CAPPRM:MHLW + MOVOL:200V + OILTYP:RXD) + COOL:AIR , (((COOL:AIR + MOVOL:230V , MOVOL:460V) + (MODEL:GA75VP_16 , MODEL:GA90VP_16) + CAPPRM:ASME , CAPPRM:MHLW + MOVOL:460V) + FREQ:60HZ , CAPPRM:MHLW + FREQ:50HZ + MOVOL:400V) + OILTYP:RXD **(05/12/2018 - 30/12/2027)** **(31/12/2027 - ...)** (((CAPPRM:AS1210 , CAPPRM:CE , CAPPRM:MOM) + MOVOL:400V , CAPPRM:CE + COOL:AIR + MOVOL:500V) + FREQ:50HZ , (MOVOL:380V , MOVOL:460V) + CAPPRM:ASME + FREQ:60HZ) + OILTYP:RIF , (((CAPPRM:ASME + FREQ:60HZ + MOVOL:230V , CAPPRM:MHLW + MOVOL:200V) + COOL:AIR , CAPPRM:ASME + FREQ:60HZ + MOVOL:460V) + (MODEL:GA75VP_16 , MODEL:GA90VP_16) , (FREQ:50HZ + MOVOL:400V , FREQ:60HZ + MOVOL:460V) + CAPPRM:MHLW) + OILTYP:RXD

Legend:

CAPPRM:AS1210 - Component approval mechanical:AS1210
CAPPRM:ASME - Component approval mechanical:ASME
CAPPRM:CE - Component approval mechanical:CE
CAPPRM:MHLW - Component approval mechanical:MHLW
CAPPRM:MOM - Component approval mechanical:MOM
COOL:AIR - Cooling:Air cooled
COOL:WATER - Cooling:Water cooled
FREQ:50HZ - Frequency:50 Hz
FREQ:60HZ - Frequency:60 Hz
MODEL:GA110VP_16 - Model:GA 110VSD+
MODEL:GA75VP_16 - Model:GA 75VSD+
MODEL:GA90VP_16 - Model:GA 90VSD+
MOVOL:200V - Supply voltage:200 V
MOVOL:230V - Supply voltage:230 V
MOVOL:380V - Supply voltage:380 V
MOVOL:400V - Supply voltage:400 V
MOVOL:460V - Supply voltage:460 V
MOVOL:500V - Supply voltage:500 V
OILTYP:RIF - Oil type:Roto inject fluid oil
OILTYP:RXD - Oil type:Roto-Xtend Duty Fluid

6.4 - Air receiver AS1210, CE, MOM - RIF Oil, MHLW - RXD Oil

(((CAPPRM:AS1210 , CAPPRM:CE , CAPPRM:MOM) + MOVOL:400V , CAPPRM:CE + COOL:AIR + MOVOL:500V) + FREQ:50HZ , (MOVOL:380V , MOVOL:460V) + CAPPRM:ASME + FREQ:60HZ) + OILTYP:RIF , ((COOL:AIR + MOVOL:200V , FREQ:50HZ + MOVOL:400V , FREQ:60HZ + MOVOL:460V) + CAPPRM:MHLW , (COOL:AIR + MOVOL:230V , MOVOL:460V) + (MODEL:GA75VP_16 , MODEL:GA90VP_16) + CAPPRM:ASME + FREQ:60HZ) + OILTYP:RXD

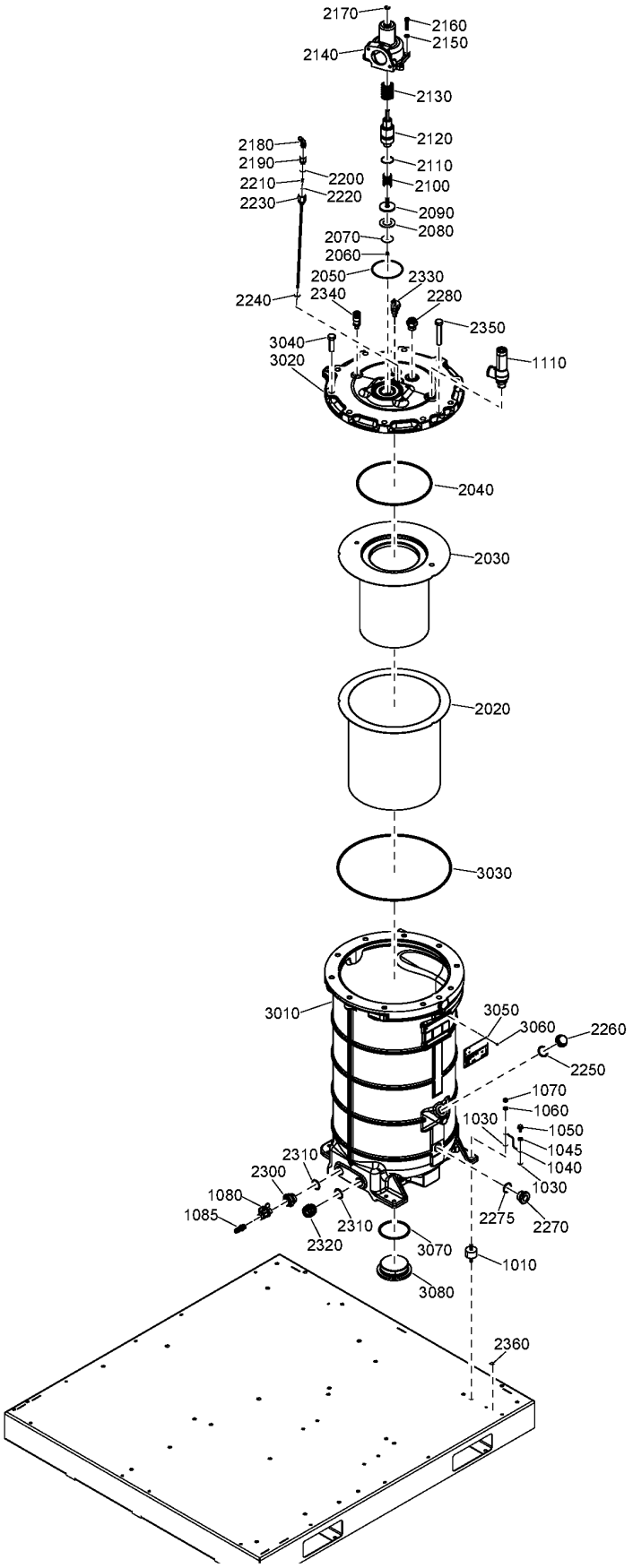

6.4 - Air receiver AS1210, CE, MOM - RIF Oil, MHLW - RXD Oil

(((CAPPRM:AS1210 , CAPPRM:CE , CAPPRM:MOM) + MOVOL:400V , CAPPRM:CE + COOL:AIR + MOVOL:500V) + FREQ:50HZ , (MOVOL:380V , MOVOL:460V) + CAPPRM:ASME + FREQ:60HZ) + OILTYP:RIF , ((COOL:AIR + MOVOL:200V , FREQ:50HZ + MOVOL:400V , FREQ:60HZ + MOVOL:460V) + CAPPRM:MHLW , (COOL:AIR + MOVOL:230V , MOVOL:460V) + (MODEL:GA75VP_16 , MODEL:GA90VP_16) + CAPPRM:ASME + FREQ:60HZ) + OILTYP:RXD

Ref	Part Number	Qty	Name	Validity
2080 •	1613 3223 01	1	WASHER	**(09/03/2017 - 12/07/2017)** ((MODEL:GA110VP_16 + MOVOL:380V + OILTYP:RIF , MODEL:GA75VP_16 + MOVOL:460V + OILTYP:RXD) + CAPPRM:ASME + FREQ:60HZ , CAPPRM:CE + FREQ:50HZ + MOVOL:400V + OILTYP:RIF) + COOL:AIR **(13/07/2017 - 19/07/2017)** (((MOVOL:230V , MOVOL:460V) + MODEL:GA75VP_16 + OILTYP:RXD , (MOVOL:380V , MOVOL:460V) + MODEL:GA110VP_16 + OILTYP:RIF) + CAPPRM:ASME + FREQ:60HZ , (MOVOL:400V , MOVOL:500V) + CAPPRM:CE + FREQ:50HZ + OILTYP:RIF) + COOL:AIR **(20/07/2017 - 20/08/2018)** ((((CAPPRM:AS1210 , CAPPRM:CE , CAPPRM:MOM) + MOVOL:400V , CAPPRM:CE + MOVOL:500V) + FREQ:50HZ , (MOVOL:380V , MOVOL:460V) + CAPPRM:ASME + FREQ:60HZ) + OILTYP:RIF , (((FREQ:50HZ , FREQ:60HZ) + MOVOL:200V , FREQ:50HZ + MOVOL:400V , FREQ:60HZ + MOVOL:460V) + CAPPRM:MHLW , (MODEL:GA75VP_16 , MODEL:GA90VP_16) + (MOVOL:230V , MOVOL:460V) + CAPPRM:ASME + FREQ:60HZ) + OILTYP:RXD) + COOL:AIR **(21/08/2018 - 04/12/2018)** ((((CAPPRM:AS1210 , CAPPRM:CE , CAPPRM:MOM) + MOVOL:400V , CAPPRM:CE + MOVOL:500V) + FREQ:50HZ , (MOVOL:380V , MOVOL:460V) + CAPPRM:ASME + FREQ:60HZ) + OILTYP:RIF , CAPPRM:MHLW + MOVOL:200V + OILTYP:RXD) + COOL:AIR , (((COOL:AIR + MOVOL:230V , MOVOL:460V) + (MODEL:GA75VP_16 , MODEL:GA90VP_16) + CAPPRM:ASME , CAPPRM:MHLW + MOVOL:460V) + FREQ:60HZ , CAPPRM:MHLW + FREQ:50HZ + MOVOL:400V) + OILTYP:RXD **(05/12/2018 - 30/12/2027)** **(31/12/2027 - ...)** (((CAPPRM:AS1210 , CAPPRM:CE , CAPPRM:MOM) + MOVOL:400V , CAPPRM:CE + COOL:AIR + MOVOL:500V) + FREQ:50HZ , (MOVOL:380V , MOVOL:460V) + CAPPRM:ASME + FREQ:60HZ) + OILTYP:RIF , (((CAPPRM:ASME + FREQ:60HZ + MOVOL:230V , CAPPRM:MHLW + MOVOL:200V) + COOL:AIR , CAPPRM:ASME + FREQ:60HZ + MOVOL:460V) + (MODEL:GA75VP_16 , MODEL:GA90VP_16) , (FREQ:50HZ + MOVOL:400V , FREQ:60HZ + MOVOL:460V) + CAPPRM:MHLW) + OILTYP:RXD
2090 •	1613 3221 00	1	PISTON VALVE	**(09/03/2017 - 12/07/2017)** ((MODEL:GA110VP_16 + MOVOL:380V + OILTYP:RIF , MODEL:GA75VP_16 + MOVOL:460V + OILTYP:RXD) + CAPPRM:ASME + FREQ:60HZ , CAPPRM:CE + FREQ:50HZ + MOVOL:400V + OILTYP:RIF) + COOL:AIR **(13/07/2017 - 19/07/2017)** (((MOVOL:230V , MOVOL:460V) + MODEL:GA75VP_16 + OILTYP:RXD , (MOVOL:380V , MOVOL:460V) + MODEL:GA110VP_16 + OILTYP:RIF) + CAPPRM:ASME + FREQ:60HZ , (MOVOL:400V , MOVOL:500V) + CAPPRM:CE + FREQ:50HZ + OILTYP:RIF) + COOL:AIR **(20/07/2017 - 20/08/2018)** ((((CAPPRM:AS1210 , CAPPRM:CE , CAPPRM:MOM) + MOVOL:400V , CAPPRM:CE + MOVOL:500V) + FREQ:50HZ , (MOVOL:380V , MOVOL:460V) + CAPPRM:ASME + FREQ:60HZ) + OILTYP:RIF , (((FREQ:50HZ , FREQ:60HZ) + MOVOL:200V , FREQ:50HZ + MOVOL:400V , FREQ:60HZ + MOVOL:460V) + CAPPRM:MHLW , (MODEL:GA75VP_16 , MODEL:GA90VP_16) + (MOVOL:230V , MOVOL:460V) + CAPPRM:ASME + FREQ:60HZ) + OILTYP:RXD) + COOL:AIR **(21/08/2018 - 04/12/2018)** ((((CAPPRM:AS1210 , CAPPRM:CE , CAPPRM:MOM) + MOVOL:400V , CAPPRM:CE + MOVOL:500V) + FREQ:50HZ , (MOVOL:380V , MOVOL:460V) + CAPPRM:ASME + FREQ:60HZ) + OILTYP:RIF , CAPPRM:MHLW + MOVOL:200V + OILTYP:RXD) + COOL:AIR , (((COOL:AIR + MOVOL:230V , MOVOL:460V) + (MODEL:GA75VP_16 , MODEL:GA90VP_16) + CAPPRM:ASME , CAPPRM:MHLW + MOVOL:460V) + FREQ:60HZ , CAPPRM:MHLW + FREQ:50HZ + MOVOL:400V) + OILTYP:RXD **(05/12/2018 - 30/12/2027)** **(31/12/2027 - ...)** (((CAPPRM:AS1210 , CAPPRM:CE , CAPPRM:MOM) + MOVOL:400V , CAPPRM:CE + COOL:AIR + MOVOL:500V) + FREQ:50HZ , (MOVOL:380V , MOVOL:460V) + CAPPRM:ASME + FREQ:60HZ) + OILTYP:RIF , (((CAPPRM:ASME + FREQ:60HZ + MOVOL:230V , CAPPRM:MHLW + MOVOL:200V) + COOL:AIR , CAPPRM:ASME + FREQ:60HZ + MOVOL:460V) + (MODEL:GA75VP_16 , MODEL:GA90VP_16) , (FREQ:50HZ + MOVOL:400V , FREQ:60HZ + MOVOL:460V) + CAPPRM:MHLW) + OILTYP:RXD

Legend:

CAPPRM:AS1210 - Component approval mechanical:AS1210
CAPPRM:ASME - Component approval mechanical:ASME
CAPPRM:CE - Component approval mechanical:CE
CAPPRM:MHLW - Component approval mechanical:MHLW
CAPPRM:MOM - Component approval mechanical:MOM
COOL:AIR - Cooling:Air cooled
COOL:WATER - Cooling:Water cooled
FREQ:50HZ - Frequency:50 Hz
FREQ:60HZ - Frequency:60 Hz
MODEL:GA110VP_16 - Model:GA 110VSD+
MODEL:GA75VP_16 - Model:GA 75VSD+
MODEL:GA90VP_16 - Model:GA 90VSD+
MOVOL:200V - Supply voltage:200 V
MOVOL:230V - Supply voltage:230 V
MOVOL:380V - Supply voltage:380 V
MOVOL:400V - Supply voltage:400 V
MOVOL:460V - Supply voltage:460 V
MOVOL:500V - Supply voltage:500 V
OILTYP:RIF - Oil type:Roto inject fluid oil
OILTYP:RXD - Oil type:Roto-Xtend Duty Fluid

6.4 - Air receiver AS1210, CE, MOM - RIF Oil, MHLW - RXD Oil

(((CAPPRM:AS1210 , CAPPRM:CE , CAPPRM:MOM) + MOVOL:400V , CAPPRM:CE + COOL:AIR + MOVOL:500V) + FREQ:50HZ , (MOVOL:380V , MOVOL:460V) + CAPPRM:ASME + FREQ:60HZ) + OILTYP:RIF , ((COOL:AIR + MOVOL:200V , FREQ:50HZ + MOVOL:400V , FREQ:60HZ + MOVOL:460V) + CAPPRM:MHLW , (COOL:AIR + MOVOL:230V , MOVOL:460V) + (MODEL:GA75VP_16 , MODEL:GA90VP_16) + CAPPRM:ASME + FREQ:60HZ) + OILTYP:RXD

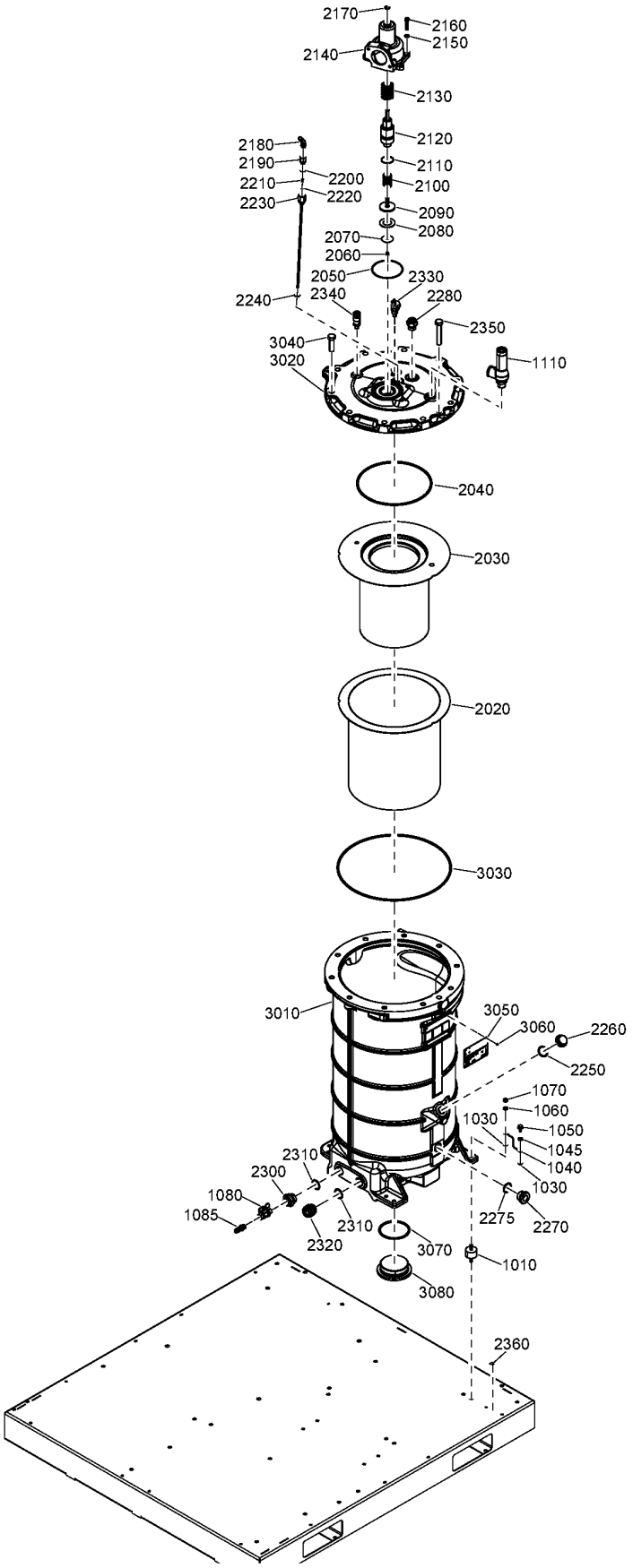

6.4 - Air receiver AS1210, CE, MOM - RIF Oil, MHLW - RXD Oil

(((CAPPRM:AS1210 , CAPPRM:CE , CAPPRM:MOM) + MOVOL:400V , CAPPRM:CE + COOL:AIR + MOVOL:500V) + FREQ:50HZ , (MOVOL:380V , MOVOL:460V) + CAPPRM:ASME + FREQ:60HZ) + OILTYP:RIF , ((COOL:AIR + MOVOL:200V , FREQ:50HZ + MOVOL:400V , FREQ:60HZ + MOVOL:460V) + CAPPRM:MHLW , (COOL:AIR + MOVOL:230V , MOVOL:460V) + (MODEL:GA75VP_16 , MODEL:GA90VP_16) + CAPPRM:ASME + FREQ:60HZ) + OILTYP:RXD

Ref	Part Number	Qty	Name	Validity
2100 •	1622 3662 00	1	SPRING	**(09/03/2017 - 12/07/2017)** ((MODEL:GA110VP_16 + MOVOL:380V + OILTYP:RIF , MODEL:GA75VP_16 + MOVOL:460V + OILTYP:RXD) + CAPPRM:ASME + FREQ:60HZ , CAPPRM:CE + FREQ:50HZ + MOVOL:400V + OILTYP:RIF) + COOL:AIR **(13/07/2017 - 19/07/2017)** (((MOVOL:230V , MOVOL:460V) + MODEL:GA75VP_16 + OILTYP:RXD , (MOVOL:380V , MOVOL:460V) + MODEL:GA110VP_16 + OILTYP:RIF) + CAPPRM:ASME + FREQ:60HZ , (MOVOL:400V , MOVOL:500V) + CAPPRM:CE + FREQ:50HZ + OILTYP:RIF) + COOL:AIR **(20/07/2017 - 20/08/2018)** ((((CAPPRM:AS1210 , CAPPRM:CE , CAPPRM:MOM) + MOVOL:400V , CAPPRM:CE + MOVOL:500V) + FREQ:50HZ , (MOVOL:380V , MOVOL:460V) + CAPPRM:ASME + FREQ:60HZ) + OILTYP:RIF , (((FREQ:50HZ , FREQ:60HZ) + MOVOL:200V , FREQ:50HZ + MOVOL:400V , FREQ:60HZ + MOVOL:460V) + CAPPRM:MHLW , (MODEL:GA75VP_16 , MODEL:GA90VP_16) + (MOVOL:230V , MOVOL:460V) + CAPPRM:ASME + FREQ:60HZ) + OILTYP:RXD) + COOL:AIR **(21/08/2018 - 04/12/2018)** ((((CAPPRM:AS1210 , CAPPRM:CE , CAPPRM:MOM) + MOVOL:400V , CAPPRM:CE + MOVOL:500V) + FREQ:50HZ , (MOVOL:380V , MOVOL:460V) + CAPPRM:ASME + FREQ:60HZ) + OILTYP:RIF , CAPPRM:MHLW + MOVOL:200V + OILTYP:RXD) + COOL:AIR , (((COOL:AIR + MOVOL:230V , MOVOL:460V) + (MODEL:GA75VP_16 , MODEL:GA90VP_16) + CAPPRM:ASME , CAPPRM:MHLW + MOVOL:460V) + FREQ:60HZ , CAPPRM:MHLW + FREQ:50HZ + MOVOL:400V) + OILTYP:RXD **(05/12/2018 - 30/12/2027)** **(31/12/2027 - ...)** (((CAPPRM:AS1210 , CAPPRM:CE , CAPPRM:MOM) + MOVOL:400V , CAPPRM:CE + COOL:AIR + MOVOL:500V) + FREQ:50HZ , (MOVOL:380V , MOVOL:460V) + CAPPRM:ASME + FREQ:60HZ) + OILTYP:RIF , (((CAPPRM:ASME + FREQ:60HZ + MOVOL:230V , CAPPRM:MHLW + MOVOL:200V) + COOL:AIR , CAPPRM:ASME + FREQ:60HZ + MOVOL:460V) + (MODEL:GA75VP_16 , MODEL:GA90VP_16) , (FREQ:50HZ + MOVOL:400V , FREQ:60HZ + MOVOL:460V) + CAPPRM:MHLW) + OILTYP:RXD
2110 •	0663 2101 01	1	O-RING	**(09/03/2017 - 12/07/2017)** ((MODEL:GA110VP_16 + MOVOL:380V + OILTYP:RIF , MODEL:GA75VP_16 + MOVOL:460V + OILTYP:RXD) + CAPPRM:ASME + FREQ:60HZ , CAPPRM:CE + FREQ:50HZ + MOVOL:400V + OILTYP:RIF) + COOL:AIR **(13/07/2017 - 19/07/2017)** (((MOVOL:230V , MOVOL:460V) + MODEL:GA75VP_16 + OILTYP:RXD , (MOVOL:380V , MOVOL:460V) + MODEL:GA110VP_16 + OILTYP:RIF) + CAPPRM:ASME + FREQ:60HZ , (MOVOL:400V , MOVOL:500V) + CAPPRM:CE + FREQ:50HZ + OILTYP:RIF) + COOL:AIR **(20/07/2017 - 20/08/2018)** ((((CAPPRM:AS1210 , CAPPRM:CE , CAPPRM:MOM) + MOVOL:400V , CAPPRM:CE + MOVOL:500V) + FREQ:50HZ , (MOVOL:380V , MOVOL:460V) + CAPPRM:ASME + FREQ:60HZ) + OILTYP:RIF , (((FREQ:50HZ , FREQ:60HZ) + MOVOL:200V , FREQ:50HZ + MOVOL:400V , FREQ:60HZ + MOVOL:460V) + CAPPRM:MHLW , (MODEL:GA75VP_16 , MODEL:GA90VP_16) + (MOVOL:230V , MOVOL:460V) + CAPPRM:ASME + FREQ:60HZ) + OILTYP:RXD) + COOL:AIR **(21/08/2018 - 04/12/2018)** ((((CAPPRM:AS1210 , CAPPRM:CE , CAPPRM:MOM) + MOVOL:400V , CAPPRM:CE + MOVOL:500V) + FREQ:50HZ , (MOVOL:380V , MOVOL:460V) + CAPPRM:ASME + FREQ:60HZ) + OILTYP:RIF , CAPPRM:MHLW + MOVOL:200V + OILTYP:RXD) + COOL:AIR , (((COOL:AIR + MOVOL:230V , MOVOL:460V) + (MODEL:GA75VP_16 , MODEL:GA90VP_16) + CAPPRM:ASME , CAPPRM:MHLW + MOVOL:460V) + FREQ:60HZ , CAPPRM:MHLW + FREQ:50HZ + MOVOL:400V) + OILTYP:RXD **(05/12/2018 - 30/12/2027)** **(31/12/2027 - ...)** (((CAPPRM:AS1210 , CAPPRM:CE , CAPPRM:MOM) + MOVOL:400V , CAPPRM:CE + COOL:AIR + MOVOL:500V) + FREQ:50HZ , (MOVOL:380V , MOVOL:460V) + CAPPRM:ASME + FREQ:60HZ) + OILTYP:RIF , (((CAPPRM:ASME + FREQ:60HZ + MOVOL:230V , CAPPRM:MHLW + MOVOL:200V) + COOL:AIR , CAPPRM:ASME + FREQ:60HZ + MOVOL:460V) + (MODEL:GA75VP_16 , MODEL:GA90VP_16) , (FREQ:50HZ + MOVOL:400V , FREQ:60HZ + MOVOL:460V) + CAPPRM:MHLW) + OILTYP:RXD

Legend:

CAPPRM:AS1210 - Component approval mechanical:AS1210
CAPPRM:ASME - Component approval mechanical:ASME
CAPPRM:CE - Component approval mechanical:CE
CAPPRM:MHLW - Component approval mechanical:MHLW
CAPPRM:MOM - Component approval mechanical:MOM
COOL:AIR - Cooling:Air cooled
COOL:WATER - Cooling:Water cooled
FREQ:50HZ - Frequency:50 Hz
FREQ:60HZ - Frequency:60 Hz
MODEL:GA110VP_16 - Model:GA 110VSD+
MODEL:GA75VP_16 - Model:GA 75VSD+
MODEL:GA90VP_16 - Model:GA 90VSD+
MOVOL:200V - Supply voltage:200 V
MOVOL:230V - Supply voltage:230 V
MOVOL:380V - Supply voltage:380 V
MOVOL:400V - Supply voltage:400 V
MOVOL:460V - Supply voltage:460 V
MOVOL:500V - Supply voltage:500 V
OILTYP:RIF - Oil type:Roto inject fluid oil
OILTYP:RXD - Oil type:Roto-Xtend Duty Fluid

6.4 - Air receiver AS1210, CE, MOM - RIF Oil, MHLW - RXD Oil

(((CAPPRM:AS1210 , CAPPRM:CE , CAPPRM:MOM) + MOVOL:400V , CAPPRM:CE + COOL:AIR + MOVOL:500V) + FREQ:50HZ , (MOVOL:380V , MOVOL:460V) + CAPPRM:ASME + FREQ:60HZ) + OILTYP:RIF , ((COOL:AIR + MOVOL:200V , FREQ:50HZ + MOVOL:400V , FREQ:60HZ + MOVOL:460V) + CAPPRM:MHLW , (COOL:AIR + MOVOL:230V , MOVOL:460V) + (MODEL:GA75VP_16 , MODEL:GA90VP_16) + CAPPRM:ASME + FREQ:60HZ) + OILTYP:RXD

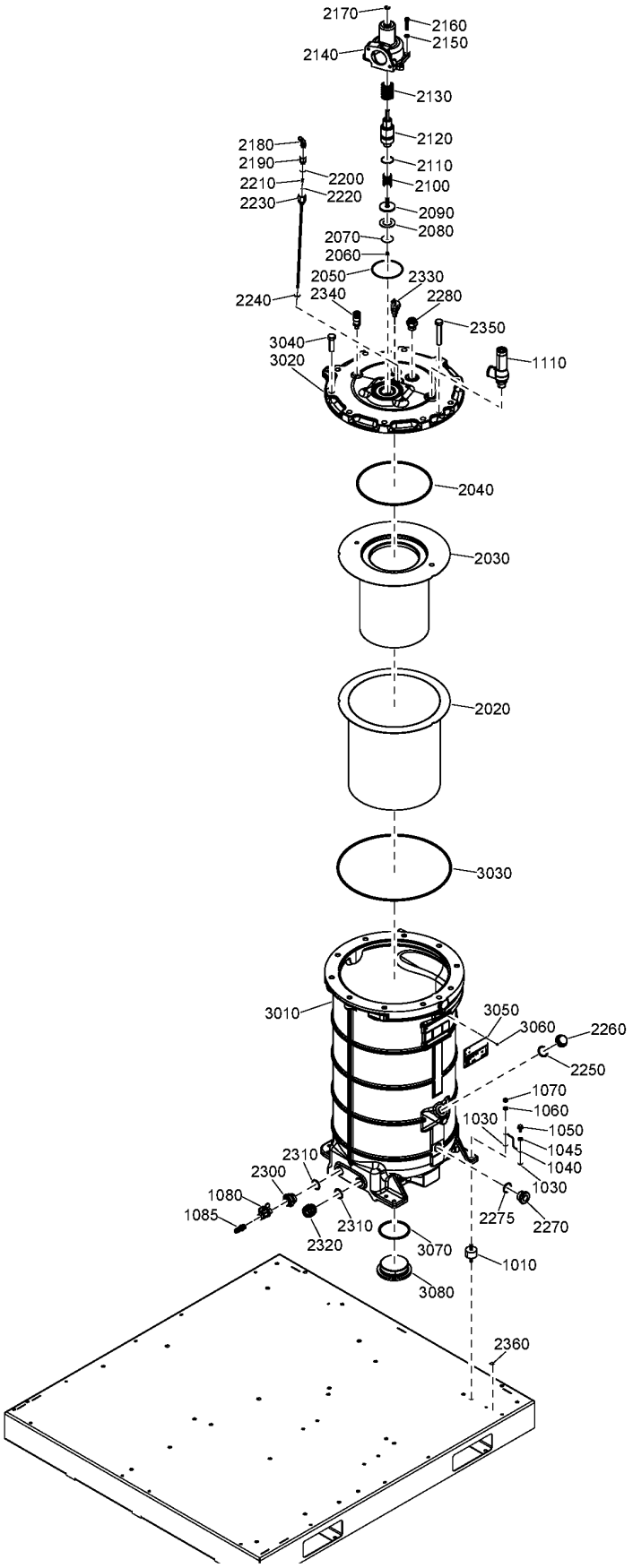

6.4 - Air receiver AS1210, CE, MOM - RIF Oil, MHLW - RXD Oil

(((CAPPRM:AS1210 , CAPPRM:CE , CAPPRM:MOM) + MOVOL:400V , CAPPRM:CE + COOL:AIR + MOVOL:500V) + FREQ:50HZ , (MOVOL:380V , MOVOL:460V) + CAPPRM:ASME + FREQ:60HZ) + OILTYP:RIF , ((COOL:AIR + MOVOL:200V , FREQ:50HZ + MOVOL:400V , FREQ:60HZ + MOVOL:460V) + CAPPRM:MHLW , (COOL:AIR + MOVOL:230V , MOVOL:460V) + (MODEL:GA75VP_16 , MODEL:GA90VP_16) + CAPPRM:ASME + FREQ:60HZ) + OILTYP:RXD

Ref	Part Number	Qty	Name	Validity
2120 •	1622 3663 00	1	PISTON	**(09/03/2017 - 12/07/2017)** ((MODEL:GA110VP_16 + MOVOL:380V + OILTYP:RIF , MODEL:GA75VP_16 + MOVOL:460V + OILTYP:RXD) + CAPPRM:ASME + FREQ:60HZ , CAPPRM:CE + FREQ:50HZ + MOVOL:400V + OILTYP:RIF) + COOL:AIR **(13/07/2017 - 19/07/2017)** (((MOVOL:230V , MOVOL:460V) + MODEL:GA75VP_16 + OILTYP:RXD , (MOVOL:380V , MOVOL:460V) + MODEL:GA110VP_16 + OILTYP:RIF) + CAPPRM:ASME + FREQ:60HZ , (MOVOL:400V , MOVOL:500V) + CAPPRM:CE + FREQ:50HZ + OILTYP:RIF) + COOL:AIR **(20/07/2017 - 20/08/2018)** ((((CAPPRM:AS1210 , CAPPRM:CE , CAPPRM:MOM) + MOVOL:400V , CAPPRM:CE + MOVOL:500V) + FREQ:50HZ , (MOVOL:380V , MOVOL:460V) + CAPPRM:ASME + FREQ:60HZ) + OILTYP:RIF , (((FREQ:50HZ , FREQ:60HZ) + MOVOL:200V , FREQ:50HZ + MOVOL:400V , FREQ:60HZ + MOVOL:460V) + CAPPRM:MHLW , (MODEL:GA75VP_16 , MODEL:GA90VP_16) + (MOVOL:230V , MOVOL:460V) + CAPPRM:ASME + FREQ:60HZ) + OILTYP:RXD) + COOL:AIR **(21/08/2018 - 04/12/2018)** ((((CAPPRM:AS1210 , CAPPRM:CE , CAPPRM:MOM) + MOVOL:400V , CAPPRM:CE + MOVOL:500V) + FREQ:50HZ , (MOVOL:380V , MOVOL:460V) + CAPPRM:ASME + FREQ:60HZ) + OILTYP:RIF , CAPPRM:MHLW + MOVOL:200V + OILTYP:RXD) + COOL:AIR , (((COOL:AIR + MOVOL:230V , MOVOL:460V) + (MODEL:GA75VP_16 , MODEL:GA90VP_16) + CAPPRM:ASME , CAPPRM:MHLW + MOVOL:460V) + FREQ:60HZ , CAPPRM:MHLW + FREQ:50HZ + MOVOL:400V) + OILTYP:RXD **(05/12/2018 - 30/12/2027)** **(31/12/2027 - ...)** (((CAPPRM:AS1210 , CAPPRM:CE , CAPPRM:MOM) + MOVOL:400V , CAPPRM:CE + COOL:AIR + MOVOL:500V) + FREQ:50HZ , (MOVOL:380V , MOVOL:460V) + CAPPRM:ASME + FREQ:60HZ) + OILTYP:RIF , (((CAPPRM:ASME + FREQ:60HZ + MOVOL:230V , CAPPRM:MHLW + MOVOL:200V) + COOL:AIR , CAPPRM:ASME + FREQ:60HZ + MOVOL:460V) + (MODEL:GA75VP_16 , MODEL:GA90VP_16) , (FREQ:50HZ + MOVOL:400V , FREQ:60HZ + MOVOL:460V) + CAPPRM:MHLW) + OILTYP:RXD
2130 •	1622 3664 00	1	SPRING	**(09/03/2017 - 12/07/2017)** ((MODEL:GA110VP_16 + MOVOL:380V + OILTYP:RIF , MODEL:GA75VP_16 + MOVOL:460V + OILTYP:RXD) + CAPPRM:ASME + FREQ:60HZ , CAPPRM:CE + FREQ:50HZ + MOVOL:400V + OILTYP:RIF) + COOL:AIR **(13/07/2017 - 19/07/2017)** (((MOVOL:230V , MOVOL:460V) + MODEL:GA75VP_16 + OILTYP:RXD , (MOVOL:380V , MOVOL:460V) + MODEL:GA110VP_16 + OILTYP:RIF) + CAPPRM:ASME + FREQ:60HZ , (MOVOL:400V , MOVOL:500V) + CAPPRM:CE + FREQ:50HZ + OILTYP:RIF) + COOL:AIR **(20/07/2017 - 20/08/2018)** ((((CAPPRM:AS1210 , CAPPRM:CE , CAPPRM:MOM) + MOVOL:400V , CAPPRM:CE + MOVOL:500V) + FREQ:50HZ , (MOVOL:380V , MOVOL:460V) + CAPPRM:ASME + FREQ:60HZ) + OILTYP:RIF , (((FREQ:50HZ , FREQ:60HZ) + MOVOL:200V , FREQ:50HZ + MOVOL:400V , FREQ:60HZ + MOVOL:460V) + CAPPRM:MHLW , (MODEL:GA75VP_16 , MODEL:GA90VP_16) + (MOVOL:230V , MOVOL:460V) + CAPPRM:ASME + FREQ:60HZ) + OILTYP:RXD) + COOL:AIR **(21/08/2018 - 04/12/2018)** ((((CAPPRM:AS1210 , CAPPRM:CE , CAPPRM:MOM) + MOVOL:400V , CAPPRM:CE + MOVOL:500V) + FREQ:50HZ , (MOVOL:380V , MOVOL:460V) + CAPPRM:ASME + FREQ:60HZ) + OILTYP:RIF , CAPPRM:MHLW + MOVOL:200V + OILTYP:RXD) + COOL:AIR , (((COOL:AIR + MOVOL:230V , MOVOL:460V) + (MODEL:GA75VP_16 , MODEL:GA90VP_16) + CAPPRM:ASME , CAPPRM:MHLW + MOVOL:460V) + FREQ:60HZ , CAPPRM:MHLW + FREQ:50HZ + MOVOL:400V) + OILTYP:RXD **(05/12/2018 - 30/12/2027)** **(31/12/2027 - ...)** (((CAPPRM:AS1210 , CAPPRM:CE , CAPPRM:MOM) + MOVOL:400V , CAPPRM:CE + COOL:AIR + MOVOL:500V) + FREQ:50HZ , (MOVOL:380V , MOVOL:460V) + CAPPRM:ASME + FREQ:60HZ) + OILTYP:RIF , (((CAPPRM:ASME + FREQ:60HZ + MOVOL:230V , CAPPRM:MHLW + MOVOL:200V) + COOL:AIR , CAPPRM:ASME + FREQ:60HZ + MOVOL:460V) + (MODEL:GA75VP_16 , MODEL:GA90VP_16) , (FREQ:50HZ + MOVOL:400V , FREQ:60HZ + MOVOL:460V) + CAPPRM:MHLW) + OILTYP:RXD

Legend:

CAPPRM:AS1210 - Component approval mechanical:AS1210
CAPPRM:ASME - Component approval mechanical:ASME
CAPPRM:CE - Component approval mechanical:CE
CAPPRM:MHLW - Component approval mechanical:MHLW
CAPPRM:MOM - Component approval mechanical:MOM
COOL:AIR - Cooling:Air cooled
COOL:WATER - Cooling:Water cooled
FREQ:50HZ - Frequency:50 Hz
FREQ:60HZ - Frequency:60 Hz
MODEL:GA110VP_16 - Model:GA 110VSD+
MODEL:GA75VP_16 - Model:GA 75VSD+
MODEL:GA90VP_16 - Model:GA 90VSD+
MOVOL:200V - Supply voltage:200 V
MOVOL:230V - Supply voltage:230 V
MOVOL:380V - Supply voltage:380 V
MOVOL:400V - Supply voltage:400 V
MOVOL:460V - Supply voltage:460 V
MOVOL:500V - Supply voltage:500 V
OILTYP:RIF - Oil type:Roto inject fluid oil
OILTYP:RXD - Oil type:Roto-Xtend Duty Fluid

6.4 - Air receiver AS1210, CE, MOM - RIF Oil, MHLW - RXD Oil

(((CAPPRM:AS1210 , CAPPRM:CE , CAPPRM:MOM) + MOVOL:400V , CAPPRM:CE + COOL:AIR + MOVOL:500V) + FREQ:50HZ , (MOVOL:380V , MOVOL:460V) + CAPPRM:ASME + FREQ:60HZ) + OILTYP:RIF , ((COOL:AIR + MOVOL:200V , FREQ:50HZ + MOVOL:400V , FREQ:60HZ + MOVOL:460V) + CAPPRM:MHLW , (COOL:AIR + MOVOL:230V , MOVOL:460V) + (MODEL:GA75VP_16 , MODEL:GA90VP_16) + CAPPRM:ASME + FREQ:60HZ) + OILTYP:RXD

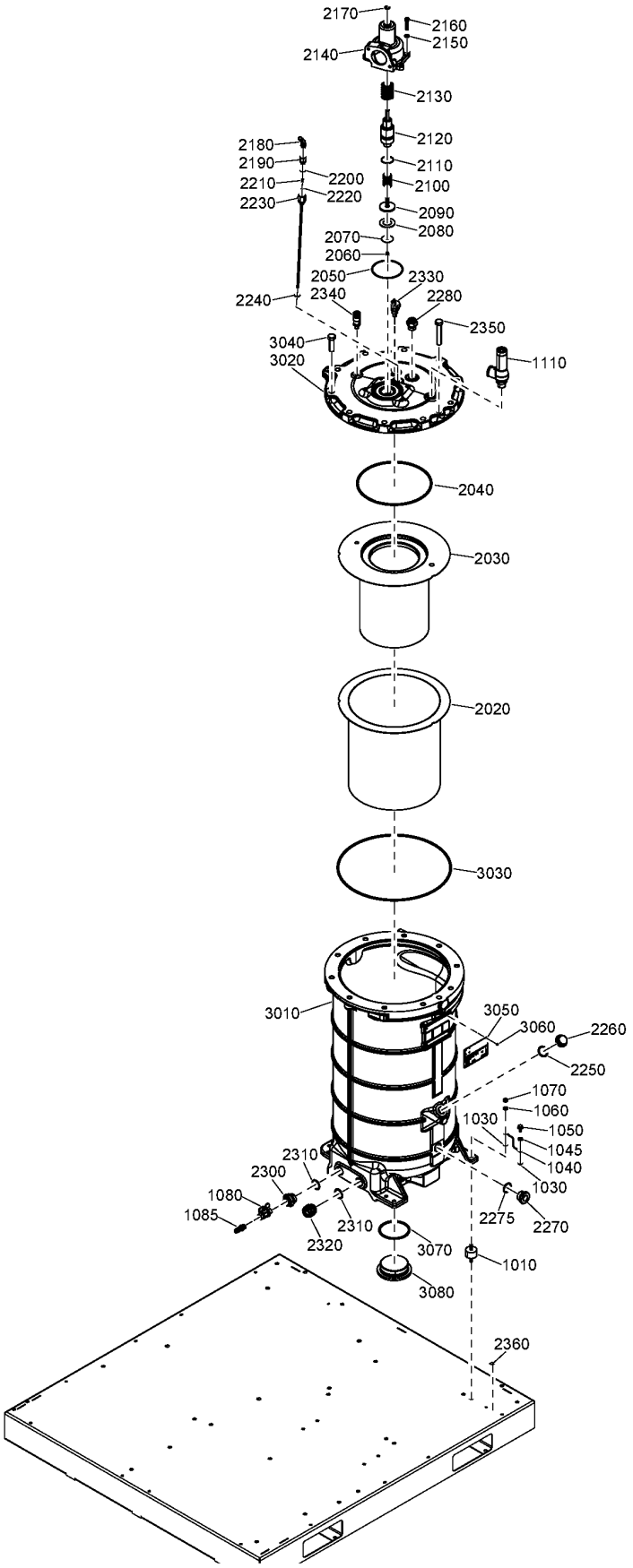

6.4 - Air receiver AS1210, CE, MOM - RIF Oil, MHLW - RXD Oil

(((CAPPRM:AS1210 , CAPPRM:CE , CAPPRM:MOM) + MOVOL:400V , CAPPRM:CE + COOL:AIR + MOVOL:500V) + FREQ:50HZ , (MOVOL:380V , MOVOL:460V) + CAPPRM:ASME + FREQ:60HZ) + OILTYP:RIF , ((COOL:AIR + MOVOL:200V , FREQ:50HZ + MOVOL:400V , FREQ:60HZ + MOVOL:460V) + CAPPRM:MHLW , (COOL:AIR + MOVOL:230V , MOVOL:460V) + (MODEL:GA75VP_16 , MODEL:GA90VP_16) + CAPPRM:ASME + FREQ:60HZ) + OILTYP:RXD

Ref	Part Number	Qty	Name	Validity
2140 •	1625 7277 01	1	HOUSING VALVE	**(09/03/2017 - 12/07/2017)** ((MODEL:GA110VP_16 + MOVOL:380V + OILTYP:RIF , MODEL:GA75VP_16 + MOVOL:460V + OILTYP:RXD) + CAPPRM:ASME + FREQ:60HZ , CAPPRM:CE + FREQ:50HZ + MOVOL:400V + OILTYP:RIF) + COOL:AIR **(13/07/2017 - 19/07/2017)** (((MOVOL:230V , MOVOL:460V) + MODEL:GA75VP_16 + OILTYP:RXD , (MOVOL:380V , MOVOL:460V) + MODEL:GA110VP_16 + OILTYP:RIF) + CAPPRM:ASME + FREQ:60HZ , (MOVOL:400V , MOVOL:500V) + CAPPRM:CE + FREQ:50HZ + OILTYP:RIF) + COOL:AIR **(20/07/2017 - 20/08/2018)** ((((CAPPRM:AS1210 , CAPPRM:CE , CAPPRM:MOM) + MOVOL:400V , CAPPRM:CE + MOVOL:500V) + FREQ:50HZ , (MOVOL:380V , MOVOL:460V) + CAPPRM:ASME + FREQ:60HZ) + OILTYP:RIF , (((FREQ:50HZ , FREQ:60HZ) + MOVOL:200V , FREQ:50HZ + MOVOL:400V , FREQ:60HZ + MOVOL:460V) + CAPPRM:MHLW , (MODEL:GA75VP_16 , MODEL:GA90VP_16) + (MOVOL:230V , MOVOL:460V) + CAPPRM:ASME + FREQ:60HZ) + OILTYP:RXD) + COOL:AIR **(21/08/2018 - 04/12/2018)** ((((CAPPRM:AS1210 , CAPPRM:CE , CAPPRM:MOM) + MOVOL:400V , CAPPRM:CE + MOVOL:500V) + FREQ:50HZ , (MOVOL:380V , MOVOL:460V) + CAPPRM:ASME + FREQ:60HZ) + OILTYP:RIF , CAPPRM:MHLW + MOVOL:200V + OILTYP:RXD) + COOL:AIR , (((COOL:AIR + MOVOL:230V , MOVOL:460V) + (MODEL:GA75VP_16 , MODEL:GA90VP_16) + CAPPRM:ASME , CAPPRM:MHLW + MOVOL:460V) + FREQ:60HZ , CAPPRM:MHLW + FREQ:50HZ + MOVOL:400V) + OILTYP:RXD **(05/12/2018 - 30/12/2027)** **(31/12/2027 - ...)** (((CAPPRM:AS1210 , CAPPRM:CE , CAPPRM:MOM) + MOVOL:400V , CAPPRM:CE + COOL:AIR + MOVOL:500V) + FREQ:50HZ , (MOVOL:380V , MOVOL:460V) + CAPPRM:ASME + FREQ:60HZ) + OILTYP:RIF , (((CAPPRM:ASME + FREQ:60HZ + MOVOL:230V , CAPPRM:MHLW + MOVOL:200V) + COOL:AIR , CAPPRM:ASME + FREQ:60HZ + MOVOL:460V) + (MODEL:GA75VP_16 , MODEL:GA90VP_16) , (FREQ:50HZ + MOVOL:400V , FREQ:60HZ + MOVOL:460V) + CAPPRM:MHLW) + OILTYP:RXD
2150 •	0301 2335 00	4	WASHER	**(09/03/2017 - 12/07/2017)** ((MODEL:GA110VP_16 + MOVOL:380V + OILTYP:RIF , MODEL:GA75VP_16 + MOVOL:460V + OILTYP:RXD) + CAPPRM:ASME + FREQ:60HZ , CAPPRM:CE + FREQ:50HZ + MOVOL:400V + OILTYP:RIF) + COOL:AIR **(13/07/2017 - 19/07/2017)** (((MOVOL:230V , MOVOL:460V) + MODEL:GA75VP_16 + OILTYP:RXD , (MOVOL:380V , MOVOL:460V) + MODEL:GA110VP_16 + OILTYP:RIF) + CAPPRM:ASME + FREQ:60HZ , (MOVOL:400V , MOVOL:500V) + CAPPRM:CE + FREQ:50HZ + OILTYP:RIF) + COOL:AIR **(20/07/2017 - 20/08/2018)** ((((CAPPRM:AS1210 , CAPPRM:CE , CAPPRM:MOM) + MOVOL:400V , CAPPRM:CE + MOVOL:500V) + FREQ:50HZ , (MOVOL:380V , MOVOL:460V) + CAPPRM:ASME + FREQ:60HZ) + OILTYP:RIF , (((FREQ:50HZ , FREQ:60HZ) + MOVOL:200V , FREQ:50HZ + MOVOL:400V , FREQ:60HZ + MOVOL:460V) + CAPPRM:MHLW , (MODEL:GA75VP_16 , MODEL:GA90VP_16) + (MOVOL:230V , MOVOL:460V) + CAPPRM:ASME + FREQ:60HZ) + OILTYP:RXD) + COOL:AIR **(21/08/2018 - 04/12/2018)** ((((CAPPRM:AS1210 , CAPPRM:CE , CAPPRM:MOM) + MOVOL:400V , CAPPRM:CE + MOVOL:500V) + FREQ:50HZ , (MOVOL:380V , MOVOL:460V) + CAPPRM:ASME + FREQ:60HZ) + OILTYP:RIF , CAPPRM:MHLW + MOVOL:200V + OILTYP:RXD) + COOL:AIR , (((COOL:AIR + MOVOL:230V , MOVOL:460V) + (MODEL:GA75VP_16 , MODEL:GA90VP_16) + CAPPRM:ASME , CAPPRM:MHLW + MOVOL:460V) + FREQ:60HZ , CAPPRM:MHLW + FREQ:50HZ + MOVOL:400V) + OILTYP:RXD **(05/12/2018 - 30/12/2027)** **(31/12/2027 - ...)** (((CAPPRM:AS1210 , CAPPRM:CE , CAPPRM:MOM) + MOVOL:400V , CAPPRM:CE + COOL:AIR + MOVOL:500V) + FREQ:50HZ , (MOVOL:380V , MOVOL:460V) + CAPPRM:ASME + FREQ:60HZ) + OILTYP:RIF , (((CAPPRM:ASME + FREQ:60HZ + MOVOL:230V , CAPPRM:MHLW + MOVOL:200V) + COOL:AIR , CAPPRM:ASME + FREQ:60HZ + MOVOL:460V) + (MODEL:GA75VP_16 , MODEL:GA90VP_16) , (FREQ:50HZ + MOVOL:400V , FREQ:60HZ + MOVOL:460V) + CAPPRM:MHLW) + OILTYP:RXD

Legend:

CAPPRM:AS1210 - Component approval mechanical:AS1210
CAPPRM:ASME - Component approval mechanical:ASME
CAPPRM:CE - Component approval mechanical:CE
CAPPRM:MHLW - Component approval mechanical:MHLW
CAPPRM:MOM - Component approval mechanical:MOM
COOL:AIR - Cooling:Air cooled
COOL:WATER - Cooling:Water cooled
FREQ:50HZ - Frequency:50 Hz
FREQ:60HZ - Frequency:60 Hz
MODEL:GA110VP_16 - Model:GA 110VSD+
MODEL:GA75VP_16 - Model:GA 75VSD+
MODEL:GA90VP_16 - Model:GA 90VSD+
MOVOL:200V - Supply voltage:200 V
MOVOL:230V - Supply voltage:230 V
MOVOL:380V - Supply voltage:380 V
MOVOL:400V - Supply voltage:400 V
MOVOL:460V - Supply voltage:460 V
MOVOL:500V - Supply voltage:500 V
OILTYP:RIF - Oil type:Roto inject fluid oil
OILTYP:RXD - Oil type:Roto-Xtend Duty Fluid

6.4 - Air receiver AS1210, CE, MOM - RIF Oil, MHLW - RXD Oil

(((CAPPRM:AS1210 , CAPPRM:CE , CAPPRM:MOM) + MOVOL:400V , CAPPRM:CE + COOL:AIR + MOVOL:500V) + FREQ:50HZ , (MOVOL:380V , MOVOL:460V) + CAPPRM:ASME + FREQ:60HZ) + OILTYP:RIF , ((COOL:AIR + MOVOL:200V , FREQ:50HZ + MOVOL:400V , FREQ:60HZ + MOVOL:460V) + CAPPRM:MHLW , (COOL:AIR + MOVOL:230V , MOVOL:460V) + (MODEL:GA75VP_16 , MODEL:GA90VP_16) + CAPPRM:ASME + FREQ:60HZ) + OILTYP:RXD

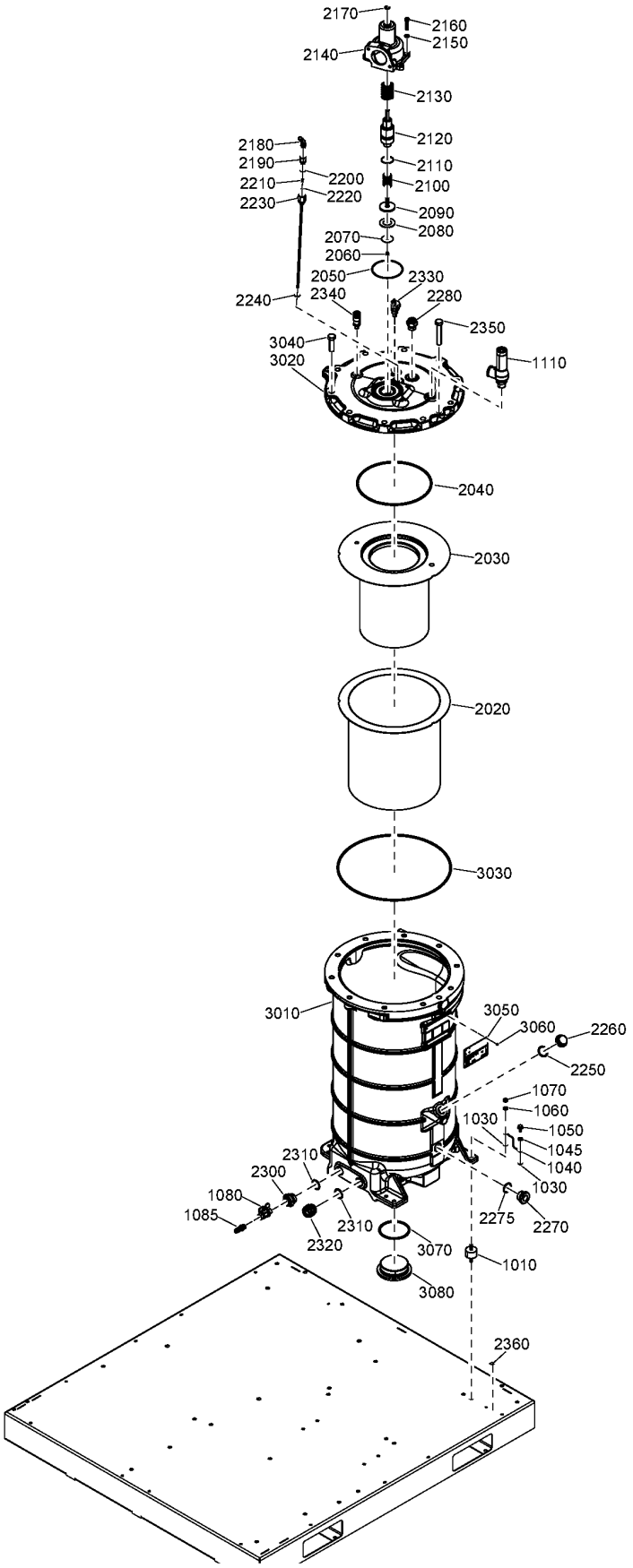

6.4 - Air receiver AS1210, CE, MOM - RIF Oil, MHLW - RXD Oil

(((CAPPRM:AS1210 , CAPPRM:CE , CAPPRM:MOM) + MOVOL:400V , CAPPRM:CE + COOL:AIR + MOVOL:500V) + FREQ:50HZ , (MOVOL:380V , MOVOL:460V) + CAPPRM:ASME + FREQ:60HZ) + OILTYP:RIF , ((COOL:AIR + MOVOL:200V , FREQ:50HZ + MOVOL:400V , FREQ:60HZ + MOVOL:460V) + CAPPRM:MHLW , (COOL:AIR + MOVOL:230V , MOVOL:460V) + (MODEL:GA75VP_16 , MODEL:GA90VP_16) + CAPPRM:ASME + FREQ:60HZ) + OILTYP:RXD

Ref	Part Number	Qty	Name	Validity
2160 •	0211 1328 03	4	SCREW	**(09/03/2017 - 12/07/2017)** ((MODEL:GA110VP_16 + MOVOL:380V + OILTYP:RIF , MODEL:GA75VP_16 + MOVOL:460V + OILTYP:RXD) + CAPPRM:ASME + FREQ:60HZ , CAPPRM:CE + FREQ:50HZ + MOVOL:400V + OILTYP:RIF) + COOL:AIR **(13/07/2017 - 19/07/2017)** (((MOVOL:230V , MOVOL:460V) + MODEL:GA75VP_16 + OILTYP:RXD , (MOVOL:380V , MOVOL:460V) + MODEL:GA110VP_16 + OILTYP:RIF) + CAPPRM:ASME + FREQ:60HZ , (MOVOL:400V , MOVOL:500V) + CAPPRM:CE + FREQ:50HZ + OILTYP:RIF) + COOL:AIR **(20/07/2017 - 20/08/2018)** ((((CAPPRM:AS1210 , CAPPRM:CE , CAPPRM:MOM) + MOVOL:400V , CAPPRM:CE + MOVOL:500V) + FREQ:50HZ , (MOVOL:380V , MOVOL:460V) + CAPPRM:ASME + FREQ:60HZ) + OILTYP:RIF , (((FREQ:50HZ , FREQ:60HZ) + MOVOL:200V , FREQ:50HZ + MOVOL:400V , FREQ:60HZ + MOVOL:460V) + CAPPRM:MHLW , (MODEL:GA75VP_16 , MODEL:GA90VP_16) + (MOVOL:230V , MOVOL:460V) + CAPPRM:ASME + FREQ:60HZ) + OILTYP:RXD) + COOL:AIR **(21/08/2018 - 04/12/2018)** ((((CAPPRM:AS1210 , CAPPRM:CE , CAPPRM:MOM) + MOVOL:400V , CAPPRM:CE + MOVOL:500V) + FREQ:50HZ , (MOVOL:380V , MOVOL:460V) + CAPPRM:ASME + FREQ:60HZ) + OILTYP:RIF , CAPPRM:MHLW + MOVOL:200V + OILTYP:RXD) + COOL:AIR , (((COOL:AIR + MOVOL:230V , MOVOL:460V) + (MODEL:GA75VP_16 , MODEL:GA90VP_16) + CAPPRM:ASME , CAPPRM:MHLW + MOVOL:460V) + FREQ:60HZ , CAPPRM:MHLW + FREQ:50HZ + MOVOL:400V) + OILTYP:RXD **(05/12/2018 - 30/12/2027)** **(31/12/2027 - ...)** (((CAPPRM:AS1210 , CAPPRM:CE , CAPPRM:MOM) + MOVOL:400V , CAPPRM:CE + COOL:AIR + MOVOL:500V) + FREQ:50HZ , (MOVOL:380V , MOVOL:460V) + CAPPRM:ASME + FREQ:60HZ) + OILTYP:RIF , (((CAPPRM:ASME + FREQ:60HZ + MOVOL:230V , CAPPRM:MHLW + MOVOL:200V) + COOL:AIR , CAPPRM:ASME + FREQ:60HZ + MOVOL:460V) + (MODEL:GA75VP_16 , MODEL:GA90VP_16) , (FREQ:50HZ + MOVOL:400V , FREQ:60HZ + MOVOL:460V) + CAPPRM:MHLW) + OILTYP:RXD
2170 •	0335 3111 00	1	CIRCLIPS	**(09/03/2017 - 12/07/2017)** ((MODEL:GA110VP_16 + MOVOL:380V + OILTYP:RIF , MODEL:GA75VP_16 + MOVOL:460V + OILTYP:RXD) + CAPPRM:ASME + FREQ:60HZ , CAPPRM:CE + FREQ:50HZ + MOVOL:400V + OILTYP:RIF) + COOL:AIR **(13/07/2017 - 19/07/2017)** (((MOVOL:230V , MOVOL:460V) + MODEL:GA75VP_16 + OILTYP:RXD , (MOVOL:380V , MOVOL:460V) + MODEL:GA110VP_16 + OILTYP:RIF) + CAPPRM:ASME + FREQ:60HZ , (MOVOL:400V , MOVOL:500V) + CAPPRM:CE + FREQ:50HZ + OILTYP:RIF) + COOL:AIR **(20/07/2017 - 20/08/2018)** ((((CAPPRM:AS1210 , CAPPRM:CE , CAPPRM:MOM) + MOVOL:400V , CAPPRM:CE + MOVOL:500V) + FREQ:50HZ , (MOVOL:380V , MOVOL:460V) + CAPPRM:ASME + FREQ:60HZ) + OILTYP:RIF , (((FREQ:50HZ , FREQ:60HZ) + MOVOL:200V , FREQ:50HZ + MOVOL:400V , FREQ:60HZ + MOVOL:460V) + CAPPRM:MHLW , (MODEL:GA75VP_16 , MODEL:GA90VP_16) + (MOVOL:230V , MOVOL:460V) + CAPPRM:ASME + FREQ:60HZ) + OILTYP:RXD) + COOL:AIR **(21/08/2018 - 04/12/2018)** ((((CAPPRM:AS1210 , CAPPRM:CE , CAPPRM:MOM) + MOVOL:400V , CAPPRM:CE + MOVOL:500V) + FREQ:50HZ , (MOVOL:380V , MOVOL:460V) + CAPPRM:ASME + FREQ:60HZ) + OILTYP:RIF , CAPPRM:MHLW + MOVOL:200V + OILTYP:RXD) + COOL:AIR , (((COOL:AIR + MOVOL:230V , MOVOL:460V) + (MODEL:GA75VP_16 , MODEL:GA90VP_16) + CAPPRM:ASME , CAPPRM:MHLW + MOVOL:460V) + FREQ:60HZ , CAPPRM:MHLW + FREQ:50HZ + MOVOL:400V) + OILTYP:RXD **(05/12/2018 - 30/12/2027)** **(31/12/2027 - ...)** (((CAPPRM:AS1210 , CAPPRM:CE , CAPPRM:MOM) + MOVOL:400V , CAPPRM:CE + COOL:AIR + MOVOL:500V) + FREQ:50HZ , (MOVOL:380V , MOVOL:460V) + CAPPRM:ASME + FREQ:60HZ) + OILTYP:RIF , (((CAPPRM:ASME + FREQ:60HZ + MOVOL:230V , CAPPRM:MHLW + MOVOL:200V) + COOL:AIR , CAPPRM:ASME + FREQ:60HZ + MOVOL:460V) + (MODEL:GA75VP_16 , MODEL:GA90VP_16) , (FREQ:50HZ + MOVOL:400V , FREQ:60HZ + MOVOL:460V) + CAPPRM:MHLW) + OILTYP:RXD

Legend:

CAPPRM:AS1210 - Component approval mechanical:AS1210
CAPPRM:ASME - Component approval mechanical:ASME
CAPPRM:CE - Component approval mechanical:CE
CAPPRM:MHLW - Component approval mechanical:MHLW
CAPPRM:MOM - Component approval mechanical:MOM
COOL:AIR - Cooling:Air cooled
COOL:WATER - Cooling:Water cooled
FREQ:50HZ - Frequency:50 Hz
FREQ:60HZ - Frequency:60 Hz
MODEL:GA110VP_16 - Model:GA 110VSD+
MODEL:GA75VP_16 - Model:GA 75VSD+
MODEL:GA90VP_16 - Model:GA 90VSD+
MOVOL:200V - Supply voltage:200 V
MOVOL:230V - Supply voltage:230 V
MOVOL:380V - Supply voltage:380 V
MOVOL:400V - Supply voltage:400 V
MOVOL:460V - Supply voltage:460 V
MOVOL:500V - Supply voltage:500 V
OILTYP:RIF - Oil type:Roto inject fluid oil
OILTYP:RXD - Oil type:Roto-Xtend Duty Fluid

6.4 - Air receiver AS1210, CE, MOM - RIF Oil, MHLW - RXD Oil

(((CAPPRM:AS1210 , CAPPRM:CE , CAPPRM:MOM) + MOVOL:400V , CAPPRM:CE + COOL:AIR + MOVOL:500V) + FREQ:50HZ , (MOVOL:380V , MOVOL:460V) + CAPPRM:ASME + FREQ:60HZ) + OILTYP:RIF , ((COOL:AIR + MOVOL:200V , FREQ:50HZ + MOVOL:400V , FREQ:60HZ + MOVOL:460V) + CAPPRM:MHLW , (COOL:AIR + MOVOL:230V , MOVOL:460V) + (MODEL:GA75VP_16 , MODEL:GA90VP_16) + CAPPRM:ASME + FREQ:60HZ) + OILTYP:RXD

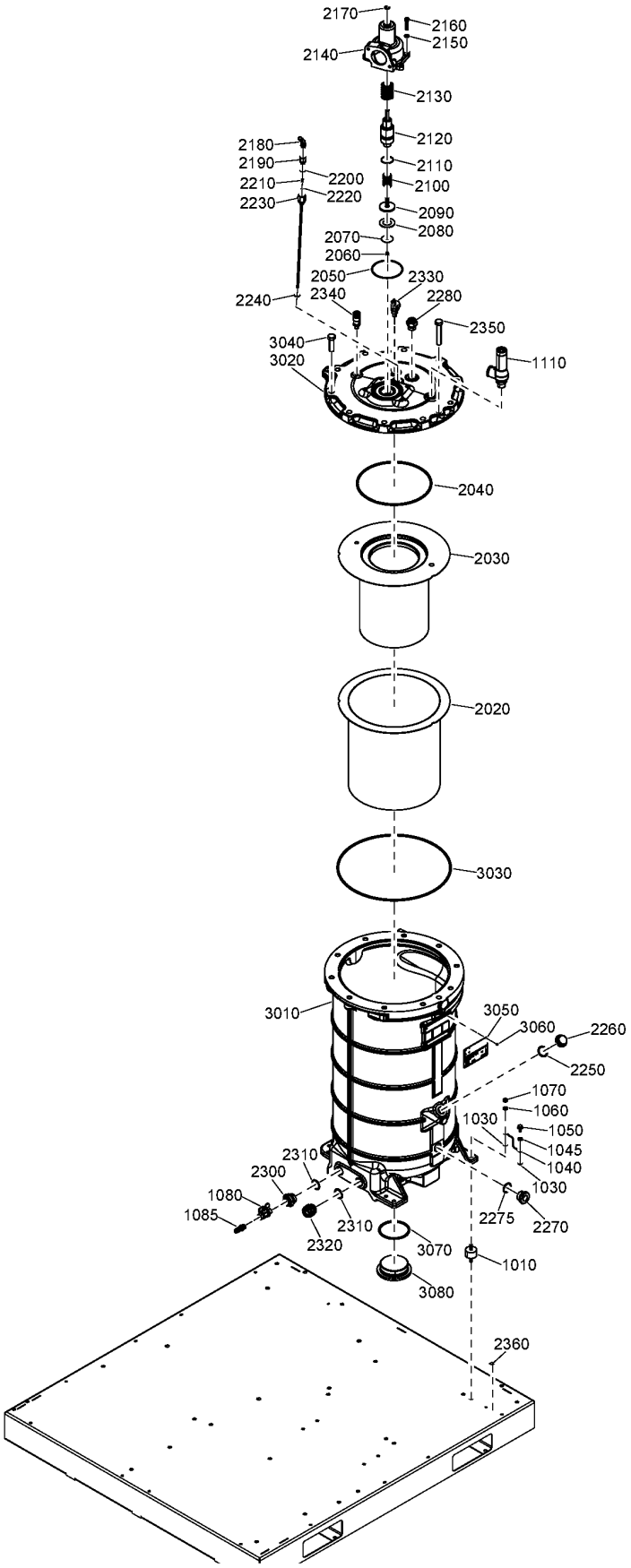

6.4 - Air receiver AS1210, CE, MOM - RIF Oil, MHLW - RXD Oil

(((CAPPRM:AS1210 , CAPPRM:CE , CAPPRM:MOM) + MOVOL:400V , CAPPRM:CE + COOL:AIR + MOVOL:500V) + FREQ:50HZ , (MOVOL:380V , MOVOL:460V) + CAPPRM:ASME + FREQ:60HZ) + OILTYP:RIF , ((COOL:AIR + MOVOL:200V , FREQ:50HZ + MOVOL:400V , FREQ:60HZ + MOVOL:460V) + CAPPRM:MHLW , (COOL:AIR + MOVOL:230V , MOVOL:460V) + (MODEL:GA75VP_16 , MODEL:GA90VP_16) + CAPPRM:ASME + FREQ:60HZ) + OILTYP:RXD

Ref	Part Number	Qty	Name	Validity
2180	• ~~0583 8121 00~~	1	ELBOW	**(09/03/2017 - 12/07/2017)** ((MODEL:GA110VP_16 + MOVOL:380V + OILTYP:RIF , MODEL:GA75VP_16 + MOVOL:460V + OILTYP:RXD) + CAPPRM:ASME + FREQ:60HZ , CAPPRM:CE + FREQ:50HZ + MOVOL:400V + OILTYP:RIF) + COOL:AIR **(13/07/2017 - 19/07/2017)** (((MOVOL:230V , MOVOL:460V) + MODEL:GA75VP_16 + OILTYP:RXD , (MOVOL:380V , MOVOL:460V) + MODEL:GA110VP_16 + OILTYP:RIF) + CAPPRM:ASME + FREQ:60HZ , (MOVOL:400V , MOVOL:500V) + CAPPRM:CE + FREQ:50HZ + OILTYP:RIF) + COOL:AIR **(20/07/2017 - 20/08/2018)** ((((CAPPRM:AS1210 , CAPPRM:CE , CAPPRM:MOM) + MOVOL:400V , CAPPRM:CE + MOVOL:500V) + FREQ:50HZ , (MOVOL:380V , MOVOL:460V) + CAPPRM:ASME + FREQ:60HZ) + OILTYP:RIF , (((FREQ:50HZ , FREQ:60HZ) + MOVOL:200V , FREQ:50HZ + MOVOL:400V , FREQ:60HZ + MOVOL:460V) + CAPPRM:MHLW , (MODEL:GA75VP_16 , MODEL:GA90VP_16) + (MOVOL:230V , MOVOL:460V) + CAPPRM:ASME + FREQ:60HZ) + OILTYP:RXD) + COOL:AIR **(21/08/2018 - 04/12/2018)** ((((CAPPRM:AS1210 , CAPPRM:CE , CAPPRM:MOM) + MOVOL:400V , CAPPRM:CE + MOVOL:500V) + FREQ:50HZ , (MOVOL:380V , MOVOL:460V) + CAPPRM:ASME + FREQ:60HZ) + OILTYP:RIF , CAPPRM:MHLW + MOVOL:200V + OILTYP:RXD) + COOL:AIR , (((COOL:AIR + MOVOL:230V , MOVOL:460V) + (MODEL:GA75VP_16 , MODEL:GA90VP_16) + CAPPRM:ASME , CAPPRM:MHLW + MOVOL:460V) + FREQ:60HZ , CAPPRM:MHLW + FREQ:50HZ + MOVOL:400V) + OILTYP:RXD **(05/12/2018 - 30/12/2027)**
	Substituted by:	0583 8121 58 - ELBOW G1/4 X 6 (quantity: 1)		
2190	• 1629 0314 25	1	NIPPLE	**(09/03/2017 - 12/07/2017)** ((MODEL:GA110VP_16 + MOVOL:380V + OILTYP:RIF , MODEL:GA75VP_16 + MOVOL:460V + OILTYP:RXD) + CAPPRM:ASME + FREQ:60HZ , CAPPRM:CE + FREQ:50HZ + MOVOL:400V + OILTYP:RIF) + COOL:AIR **(13/07/2017 - 19/07/2017)** (((MOVOL:230V , MOVOL:460V) + MODEL:GA75VP_16 + OILTYP:RXD , (MOVOL:380V , MOVOL:460V) + MODEL:GA110VP_16 + OILTYP:RIF) + CAPPRM:ASME + FREQ:60HZ , (MOVOL:400V , MOVOL:500V) + CAPPRM:CE + FREQ:50HZ + OILTYP:RIF) + COOL:AIR **(20/07/2017 - 20/08/2018)** ((((CAPPRM:AS1210 , CAPPRM:CE , CAPPRM:MOM) + MOVOL:400V , CAPPRM:CE + MOVOL:500V) + FREQ:50HZ , (MOVOL:380V , MOVOL:460V) + CAPPRM:ASME + FREQ:60HZ) + OILTYP:RIF , (((FREQ:50HZ , FREQ:60HZ) + MOVOL:200V , FREQ:50HZ + MOVOL:400V , FREQ:60HZ + MOVOL:460V) + CAPPRM:MHLW , (MODEL:GA75VP_16 , MODEL:GA90VP_16) + (MOVOL:230V , MOVOL:460V) + CAPPRM:ASME + FREQ:60HZ) + OILTYP:RXD) + COOL:AIR **(21/08/2018 - 04/12/2018)** ((((CAPPRM:AS1210 , CAPPRM:CE , CAPPRM:MOM) + MOVOL:400V , CAPPRM:CE + MOVOL:500V) + FREQ:50HZ , (MOVOL:380V , MOVOL:460V) + CAPPRM:ASME + FREQ:60HZ) + OILTYP:RIF , CAPPRM:MHLW + MOVOL:200V + OILTYP:RXD) + COOL:AIR , (((COOL:AIR + MOVOL:230V , MOVOL:460V) + (MODEL:GA75VP_16 , MODEL:GA90VP_16) + CAPPRM:ASME , CAPPRM:MHLW + MOVOL:460V) + FREQ:60HZ , CAPPRM:MHLW + FREQ:50HZ + MOVOL:400V) + OILTYP:RXD **(05/12/2018 - 30/12/2027)** **(31/12/2027 - ...)** (((CAPPRM:AS1210 , CAPPRM:CE , CAPPRM:MOM) + MOVOL:400V , CAPPRM:CE + COOL:AIR + MOVOL:500V) + FREQ:50HZ , (MOVOL:380V , MOVOL:460V) + CAPPRM:ASME + FREQ:60HZ) + OILTYP:RIF , (((CAPPRM:ASME + FREQ:60HZ + MOVOL:230V , CAPPRM:MHLW + MOVOL:200V) + COOL:AIR , CAPPRM:ASME + FREQ:60HZ + MOVOL:460V) + (MODEL:GA75VP_16 , MODEL:GA90VP_16) , (FREQ:50HZ + MOVOL:400V , FREQ:60HZ + MOVOL:460V) + CAPPRM:MHLW) + OILTYP:RXD

Legend:

CAPPRM:AS1210 - Component approval mechanical:AS1210
CAPPRM:ASME - Component approval mechanical:ASME
CAPPRM:CE - Component approval mechanical:CE
CAPPRM:MHLW - Component approval mechanical:MHLW
CAPPRM:MOM - Component approval mechanical:MOM
COOL:AIR - Cooling:Air cooled
COOL:WATER - Cooling:Water cooled
FREQ:50HZ - Frequency:50 Hz
FREQ:60HZ - Frequency:60 Hz
MODEL:GA110VP_16 - Model:GA 110VSD+
MODEL:GA75VP_16 - Model:GA 75VSD+
MODEL:GA90VP_16 - Model:GA 90VSD+
MOVOL:200V - Supply voltage:200 V
MOVOL:230V - Supply voltage:230 V
MOVOL:380V - Supply voltage:380 V
MOVOL:400V - Supply voltage:400 V
MOVOL:460V - Supply voltage:460 V
MOVOL:500V - Supply voltage:500 V
OILTYP:RIF - Oil type:Roto inject fluid oil
OILTYP:RXD - Oil type:Roto-Xtend Duty Fluid

6.4 - Air receiver AS1210, CE, MOM - RIF Oil, MHLW - RXD Oil

(((CAPPRM:AS1210 , CAPPRM:CE , CAPPRM:MOM) + MOVOL:400V , CAPPRM:CE + COOL:AIR + MOVOL:500V) + FREQ:50HZ , (MOVOL:380V , MOVOL:460V) + CAPPRM:ASME + FREQ:60HZ) + OILTYP:RIF , ((COOL:AIR + MOVOL:200V , FREQ:50HZ + MOVOL:400V , FREQ:60HZ + MOVOL:460V) + CAPPRM:MHLW , (COOL:AIR + MOVOL:230V , MOVOL:460V) + (MODEL:GA75VP_16 , MODEL:GA90VP_16) + CAPPRM:ASME + FREQ:60HZ) + OILTYP:RXD

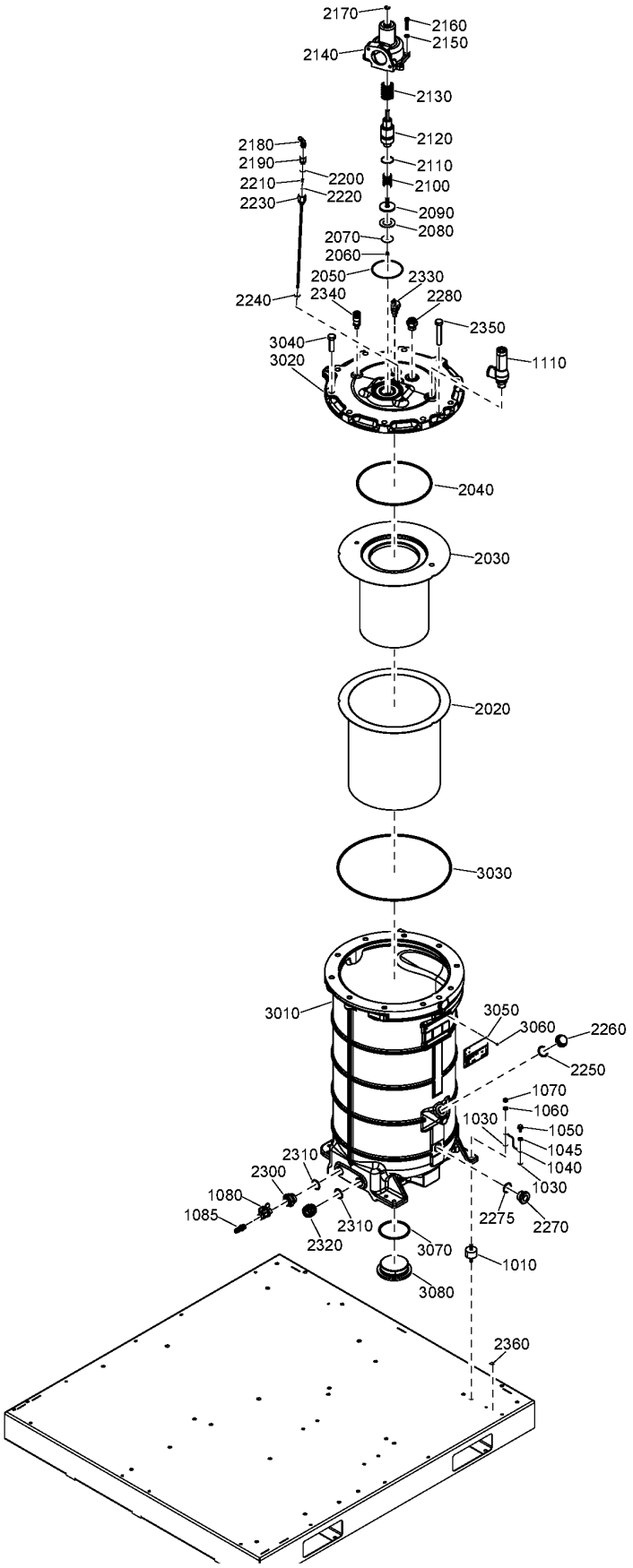

6.4 - Air receiver AS1210, CE, MOM - RIF Oil, MHLW - RXD Oil

(((CAPPRM:AS1210 , CAPPRM:CE , CAPPRM:MOM) + MOVOL:400V , CAPPRM:CE + COOL:AIR + MOVOL:500V) + FREQ:50HZ , (MOVOL:380V , MOVOL:460V) + CAPPRM:ASME + FREQ:60HZ) + OILTYP:RIF , ((COOL:AIR + MOVOL:200V , FREQ:50HZ + MOVOL:400V , FREQ:60HZ + MOVOL:460V) + CAPPRM:MHLW , (COOL:AIR + MOVOL:230V , MOVOL:460V) + (MODEL:GA75VP_16 , MODEL:GA90VP_16) + CAPPRM:ASME + FREQ:60HZ) + OILTYP:RXD

Ref	Part Number	Qty	Name	Validity
2200 •	0663 3119 00	1	O-RING	**(09/03/2017 - 12/07/2017)** ((MODEL:GA110VP_16 + MOVOL:380V + OILTYP:RIF , MODEL:GA75VP_16 + MOVOL:460V + OILTYP:RXD) + CAPPRM:ASME + FREQ:60HZ , CAPPRM:CE + FREQ:50HZ + MOVOL:400V + OILTYP:RIF) + COOL:AIR **(13/07/2017 - 19/07/2017)** (((MOVOL:230V , MOVOL:460V) + MODEL:GA75VP_16 + OILTYP:RXD , (MOVOL:380V , MOVOL:460V) + MODEL:GA110VP_16 + OILTYP:RIF) + CAPPRM:ASME + FREQ:60HZ , (MOVOL:400V , MOVOL:500V) + CAPPRM:CE + FREQ:50HZ + OILTYP:RIF) + COOL:AIR **(20/07/2017 - 20/08/2018)** ((((CAPPRM:AS1210 , CAPPRM:CE , CAPPRM:MOM) + MOVOL:400V , CAPPRM:CE + MOVOL:500V) + FREQ:50HZ , (MOVOL:380V , MOVOL:460V) + CAPPRM:ASME + FREQ:60HZ) + OILTYP:RIF , (((FREQ:50HZ , FREQ:60HZ) + MOVOL:200V , FREQ:50HZ + MOVOL:400V , FREQ:60HZ + MOVOL:460V) + CAPPRM:MHLW , (MODEL:GA75VP_16 , MODEL:GA90VP_16) + (MOVOL:230V , MOVOL:460V) + CAPPRM:ASME + FREQ:60HZ) + OILTYP:RXD) + COOL:AIR **(21/08/2018 - 04/12/2018)** ((((CAPPRM:AS1210 , CAPPRM:CE , CAPPRM:MOM) + MOVOL:400V , CAPPRM:CE + MOVOL:500V) + FREQ:50HZ , (MOVOL:380V , MOVOL:460V) + CAPPRM:ASME + FREQ:60HZ) + OILTYP:RIF , CAPPRM:MHLW + MOVOL:200V + OILTYP:RXD) + COOL:AIR , (((COOL:AIR + MOVOL:230V , MOVOL:460V) + (MODEL:GA75VP_16 , MODEL:GA90VP_16) + CAPPRM:ASME , CAPPRM:MHLW + MOVOL:460V) + FREQ:60HZ , CAPPRM:MHLW + FREQ:50HZ + MOVOL:400V) + OILTYP:RXD **(05/12/2018 - 30/12/2027)** **(31/12/2027 - ...)** (((CAPPRM:AS1210 , CAPPRM:CE , CAPPRM:MOM) + MOVOL:400V , CAPPRM:CE + COOL:AIR + MOVOL:500V) + FREQ:50HZ , (MOVOL:380V , MOVOL:460V) + CAPPRM:ASME + FREQ:60HZ) + OILTYP:RIF , (((CAPPRM:ASME + FREQ:60HZ + MOVOL:230V , CAPPRM:MHLW + MOVOL:200V) + COOL:AIR , CAPPRM:ASME + FREQ:60HZ + MOVOL:460V) + (MODEL:GA75VP_16 , MODEL:GA90VP_16) , (FREQ:50HZ + MOVOL:400V , FREQ:60HZ + MOVOL:460V) + CAPPRM:MHLW) + OILTYP:RXD
2210 •	1613 9005 01	1	NON RETURN VALVE	**(09/03/2017 - 12/07/2017)** ((MODEL:GA110VP_16 + MOVOL:380V + OILTYP:RIF , MODEL:GA75VP_16 + MOVOL:460V + OILTYP:RXD) + CAPPRM:ASME + FREQ:60HZ , CAPPRM:CE + FREQ:50HZ + MOVOL:400V + OILTYP:RIF) + COOL:AIR **(13/07/2017 - 19/07/2017)** (((MOVOL:230V , MOVOL:460V) + MODEL:GA75VP_16 + OILTYP:RXD , (MOVOL:380V , MOVOL:460V) + MODEL:GA110VP_16 + OILTYP:RIF) + CAPPRM:ASME + FREQ:60HZ , (MOVOL:400V , MOVOL:500V) + CAPPRM:CE + FREQ:50HZ + OILTYP:RIF) + COOL:AIR **(20/07/2017 - 20/08/2018)** ((((CAPPRM:AS1210 , CAPPRM:CE , CAPPRM:MOM) + MOVOL:400V , CAPPRM:CE + MOVOL:500V) + FREQ:50HZ , (MOVOL:380V , MOVOL:460V) + CAPPRM:ASME + FREQ:60HZ) + OILTYP:RIF , (((FREQ:50HZ , FREQ:60HZ) + MOVOL:200V , FREQ:50HZ + MOVOL:400V , FREQ:60HZ + MOVOL:460V) + CAPPRM:MHLW , (MODEL:GA75VP_16 , MODEL:GA90VP_16) + (MOVOL:230V , MOVOL:460V) + CAPPRM:ASME + FREQ:60HZ) + OILTYP:RXD) + COOL:AIR **(21/08/2018 - 04/12/2018)** ((((CAPPRM:AS1210 , CAPPRM:CE , CAPPRM:MOM) + MOVOL:400V , CAPPRM:CE + MOVOL:500V) + FREQ:50HZ , (MOVOL:380V , MOVOL:460V) + CAPPRM:ASME + FREQ:60HZ) + OILTYP:RIF , CAPPRM:MHLW + MOVOL:200V + OILTYP:RXD) + COOL:AIR , (((COOL:AIR + MOVOL:230V , MOVOL:460V) + (MODEL:GA75VP_16 , MODEL:GA90VP_16) + CAPPRM:ASME , CAPPRM:MHLW + MOVOL:460V) + FREQ:60HZ , CAPPRM:MHLW + FREQ:50HZ + MOVOL:400V) + OILTYP:RXD **(05/12/2018 - 30/12/2027)** **(31/12/2027 - ...)** (((CAPPRM:AS1210 , CAPPRM:CE , CAPPRM:MOM) + MOVOL:400V , CAPPRM:CE + COOL:AIR + MOVOL:500V) + FREQ:50HZ , (MOVOL:380V , MOVOL:460V) + CAPPRM:ASME + FREQ:60HZ) + OILTYP:RIF , (((CAPPRM:ASME + FREQ:60HZ + MOVOL:230V , CAPPRM:MHLW + MOVOL:200V) + COOL:AIR , CAPPRM:ASME + FREQ:60HZ + MOVOL:460V) + (MODEL:GA75VP_16 , MODEL:GA90VP_16) , (FREQ:50HZ + MOVOL:400V , FREQ:60HZ + MOVOL:460V) + CAPPRM:MHLW) + OILTYP:RXD

Legend:

CAPPRM:AS1210 - Component approval mechanical:AS1210
CAPPRM:ASME - Component approval mechanical:ASME
CAPPRM:CE - Component approval mechanical:CE
CAPPRM:MHLW - Component approval mechanical:MHLW
CAPPRM:MOM - Component approval mechanical:MOM
COOL:AIR - Cooling:Air cooled
COOL:WATER - Cooling:Water cooled
FREQ:50HZ - Frequency:50 Hz
FREQ:60HZ - Frequency:60 Hz
MODEL:GA110VP_16 - Model:GA 110VSD+
MODEL:GA75VP_16 - Model:GA 75VSD+
MODEL:GA90VP_16 - Model:GA 90VSD+
MOVOL:200V - Supply voltage:200 V
MOVOL:230V - Supply voltage:230 V
MOVOL:380V - Supply voltage:380 V
MOVOL:400V - Supply voltage:400 V
MOVOL:460V - Supply voltage:460 V
MOVOL:500V - Supply voltage:500 V
OILTYP:RIF - Oil type:Roto inject fluid oil
OILTYP:RXD - Oil type:Roto-Xtend Duty Fluid

6.4 - Air receiver AS1210, CE, MOM - RIF Oil, MHLW - RXD Oil

(((CAPPRM:AS1210 , CAPPRM:CE , CAPPRM:MOM) + MOVOL:400V , CAPPRM:CE + COOL:AIR + MOVOL:500V) + FREQ:50HZ , (MOVOL:380V , MOVOL:460V) + CAPPRM:ASME + FREQ:60HZ) + OILTYP:RIF , ((COOL:AIR + MOVOL:200V , FREQ:50HZ + MOVOL:400V , FREQ:60HZ + MOVOL:460V) + CAPPRM:MHLW , (COOL:AIR + MOVOL:230V , MOVOL:460V) + (MODEL:GA75VP_16 , MODEL:GA90VP_16) + CAPPRM:ASME + FREQ:60HZ) + OILTYP:RXD

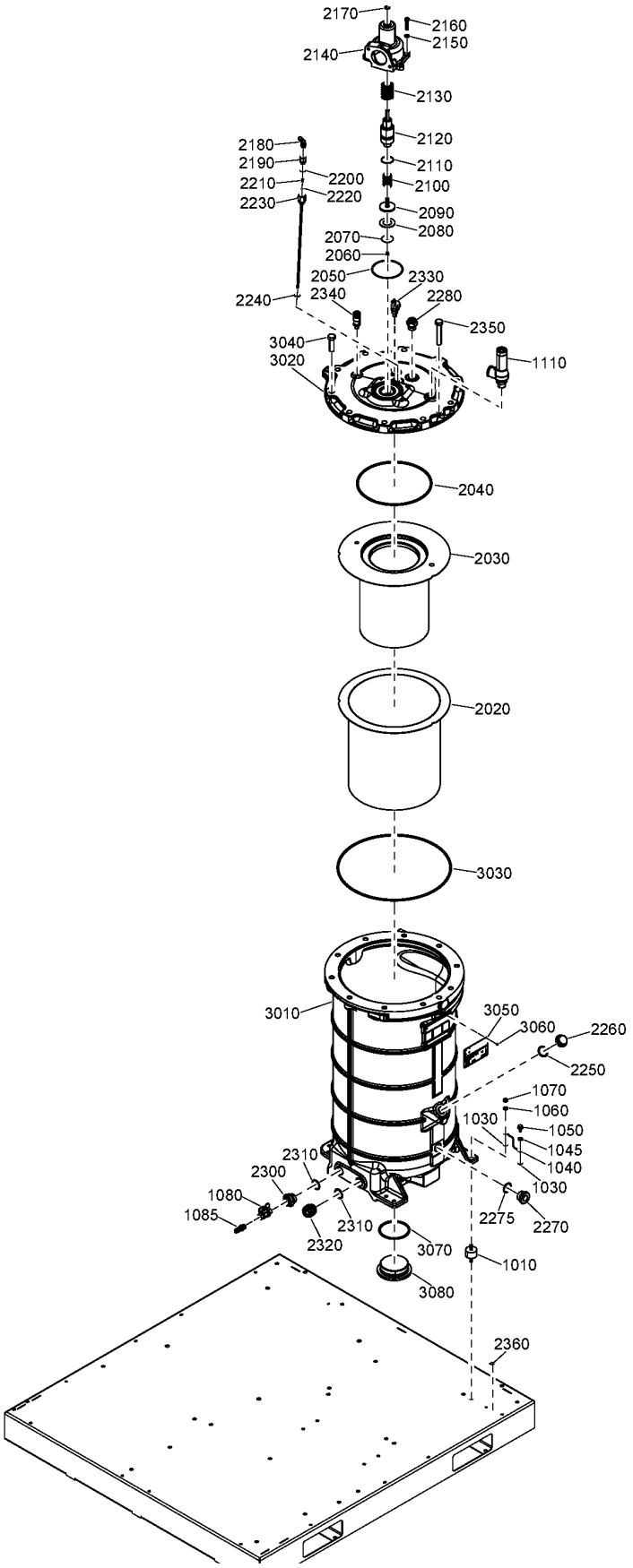

6.4 - Air receiver AS1210, CE, MOM - RIF Oil, MHLW - RXD Oil

(((CAPPRM:AS1210 , CAPPRM:CE , CAPPRM:MOM) + MOVOL:400V , CAPPRM:CE + COOL:AIR + MOVOL:500V) + FREQ:50HZ , (MOVOL:380V , MOVOL:460V) + CAPPRM:ASME + FREQ:60HZ) + OILTYP:RIF , ((COOL:AIR + MOVOL:200V , FREQ:50HZ + MOVOL:400V , FREQ:60HZ + MOVOL:460V) + CAPPRM:MHLW , (COOL:AIR + MOVOL:230V , MOVOL:460V) + (MODEL:GA75VP_16 , MODEL:GA90VP_16) + CAPPRM:ASME + FREQ:60HZ) + OILTYP:RXD

Ref	Part Number	Qty	Name	Validity
2220	• 0663 2108 11	1	O-RING	**(09/03/2017 - 12/07/2017)** ((MODEL:GA110VP_16 + MOVOL:380V + OILTYP:RIF , MODEL:GA75VP_16 + MOVOL:460V + OILTYP:RXD) + CAPPRM:ASME + FREQ:60HZ , CAPPRM:CE + FREQ:50HZ + MOVOL:400V + OILTYP:RIF) + COOL:AIR **(13/07/2017 - 19/07/2017)** (((MOVOL:230V , MOVOL:460V) + MODEL:GA75VP_16 + OILTYP:RXD , (MOVOL:380V , MOVOL:460V) + MODEL:GA110VP_16 + OILTYP:RIF) + CAPPRM:ASME + FREQ:60HZ , (MOVOL:400V , MOVOL:500V) + CAPPRM:CE + FREQ:50HZ + OILTYP:RIF) + COOL:AIR **(20/07/2017 - 20/08/2018)** ((((CAPPRM:AS1210 , CAPPRM:CE , CAPPRM:MOM) + MOVOL:400V , CAPPRM:CE + MOVOL:500V) + FREQ:50HZ , (MOVOL:380V , MOVOL:460V) + CAPPRM:ASME + FREQ:60HZ) + OILTYP:RIF , (((FREQ:50HZ , FREQ:60HZ) + MOVOL:200V , FREQ:50HZ + MOVOL:400V , FREQ:60HZ + MOVOL:460V) + CAPPRM:MHLW , (MODEL:GA75VP_16 , MODEL:GA90VP_16) + (MOVOL:230V , MOVOL:460V) + CAPPRM:ASME + FREQ:60HZ) + OILTYP:RXD) + COOL:AIR **(21/08/2018 - 04/12/2018)** ((((CAPPRM:AS1210 , CAPPRM:CE , CAPPRM:MOM) + MOVOL:400V , CAPPRM:CE + MOVOL:500V) + FREQ:50HZ , (MOVOL:380V , MOVOL:460V) + CAPPRM:ASME + FREQ:60HZ) + OILTYP:RIF , CAPPRM:MHLW + MOVOL:200V + OILTYP:RXD) + COOL:AIR , (((COOL:AIR + MOVOL:230V , MOVOL:460V) + (MODEL:GA75VP_16 , MODEL:GA90VP_16) + CAPPRM:ASME , CAPPRM:MHLW + MOVOL:460V) + FREQ:60HZ , CAPPRM:MHLW + FREQ:50HZ + MOVOL:400V) + OILTYP:RXD **(05/12/2018 - 30/12/2027)** **(31/12/2027 - ...)** (((CAPPRM:AS1210 , CAPPRM:CE , CAPPRM:MOM) + MOVOL:400V , CAPPRM:CE + COOL:AIR + MOVOL:500V) + FREQ:50HZ , (MOVOL:380V , MOVOL:460V) + CAPPRM:ASME + FREQ:60HZ) + OILTYP:RIF , (((CAPPRM:ASME + FREQ:60HZ + MOVOL:230V , CAPPRM:MHLW + MOVOL:200V) + COOL:AIR , CAPPRM:ASME + FREQ:60HZ + MOVOL:460V) + (MODEL:GA75VP_16 , MODEL:GA90VP_16) , (FREQ:50HZ + MOVOL:400V , FREQ:60HZ + MOVOL:460V) + CAPPRM:MHLW) + OILTYP:RXD
2230	• ~~1649 8001 04~~	1	SCAVANGE LINE PIPE	**(09/03/2017 - 12/07/2017)** ((MODEL:GA110VP_16 + MOVOL:380V + OILTYP:RIF , MODEL:GA75VP_16 + MOVOL:460V + OILTYP:RXD) + CAPPRM:ASME + FREQ:60HZ , CAPPRM:CE + FREQ:50HZ + MOVOL:400V + OILTYP:RIF) + COOL:AIR **(13/07/2017 - 19/07/2017)** (((MOVOL:230V , MOVOL:460V) + MODEL:GA75VP_16 + OILTYP:RXD , (MOVOL:380V , MOVOL:460V) + MODEL:GA110VP_16 + OILTYP:RIF) + CAPPRM:ASME + FREQ:60HZ , (MOVOL:400V , MOVOL:500V) + CAPPRM:CE + FREQ:50HZ + OILTYP:RIF) + COOL:AIR **(20/07/2017 - 20/08/2018)** ((((CAPPRM:AS1210 , CAPPRM:CE , CAPPRM:MOM) + MOVOL:400V , CAPPRM:CE + MOVOL:500V) + FREQ:50HZ , (MOVOL:380V , MOVOL:460V) + CAPPRM:ASME + FREQ:60HZ) + OILTYP:RIF , (((FREQ:50HZ , FREQ:60HZ) + MOVOL:200V , FREQ:50HZ + MOVOL:400V , FREQ:60HZ + MOVOL:460V) + CAPPRM:MHLW , (MODEL:GA75VP_16 , MODEL:GA90VP_16) + (MOVOL:230V , MOVOL:460V) + CAPPRM:ASME + FREQ:60HZ) + OILTYP:RXD) + COOL:AIR **(21/08/2018 - 04/12/2018)** ((((CAPPRM:AS1210 , CAPPRM:CE , CAPPRM:MOM) + MOVOL:400V , CAPPRM:CE + MOVOL:500V) + FREQ:50HZ , (MOVOL:380V , MOVOL:460V) + CAPPRM:ASME + FREQ:60HZ) + OILTYP:RIF , CAPPRM:MHLW + MOVOL:200V + OILTYP:RXD) + COOL:AIR , (((COOL:AIR + MOVOL:230V , MOVOL:460V) + (MODEL:GA75VP_16 , MODEL:GA90VP_16) + CAPPRM:ASME , CAPPRM:MHLW + MOVOL:460V) + FREQ:60HZ , CAPPRM:MHLW + FREQ:50HZ + MOVOL:400V) + OILTYP:RXD **(05/12/2018 - 16/01/2020)**

Substituted by: 1649 7001 00 - SCAVANGE LINE PIPE (quantity: 1)

Legend:

CAPPRM:AS1210 - Component approval mechanical:AS1210
CAPPRM:ASME - Component approval mechanical:ASME
CAPPRM:CE - Component approval mechanical:CE
CAPPRM:MHLW - Component approval mechanical:MHLW
CAPPRM:MOM - Component approval mechanical:MOM
COOL:AIR - Cooling:Air cooled
COOL:WATER - Cooling:Water cooled
FREQ:50HZ - Frequency:50 Hz
FREQ:60HZ - Frequency:60 Hz
MODEL:GA110VP_16 - Model:GA 110VSD+
MODEL:GA75VP_16 - Model:GA 75VSD+
MODEL:GA90VP_16 - Model:GA 90VSD+
MOVOL:200V - Supply voltage:200 V
MOVOL:230V - Supply voltage:230 V
MOVOL:380V - Supply voltage:380 V
MOVOL:400V - Supply voltage:400 V
MOVOL:460V - Supply voltage:460 V
MOVOL:500V - Supply voltage:500 V
OILTYP:RIF - Oil type:Roto inject fluid oil
OILTYP:RXD - Oil type:Roto-Xtend Duty Fluid

6.4 - Air receiver AS1210, CE, MOM - RIF Oil, MHLW - RXD Oil

(((CAPPRM:AS1210 , CAPPRM:CE , CAPPRM:MOM) + MOVOL:400V , CAPPRM:CE + COOL:AIR + MOVOL:500V) + FREQ:50HZ , (MOVOL:380V , MOVOL:460V) + CAPPRM:ASME + FREQ:60HZ) + OILTYP:RIF , ((COOL:AIR + MOVOL:200V , FREQ:50HZ + MOVOL:400V , FREQ:60HZ + MOVOL:460V) + CAPPRM:MHLW , (COOL:AIR + MOVOL:230V , MOVOL:460V) + (MODEL:GA75VP_16 , MODEL:GA90VP_16) + CAPPRM:ASME + FREQ:60HZ) + OILTYP:RXD

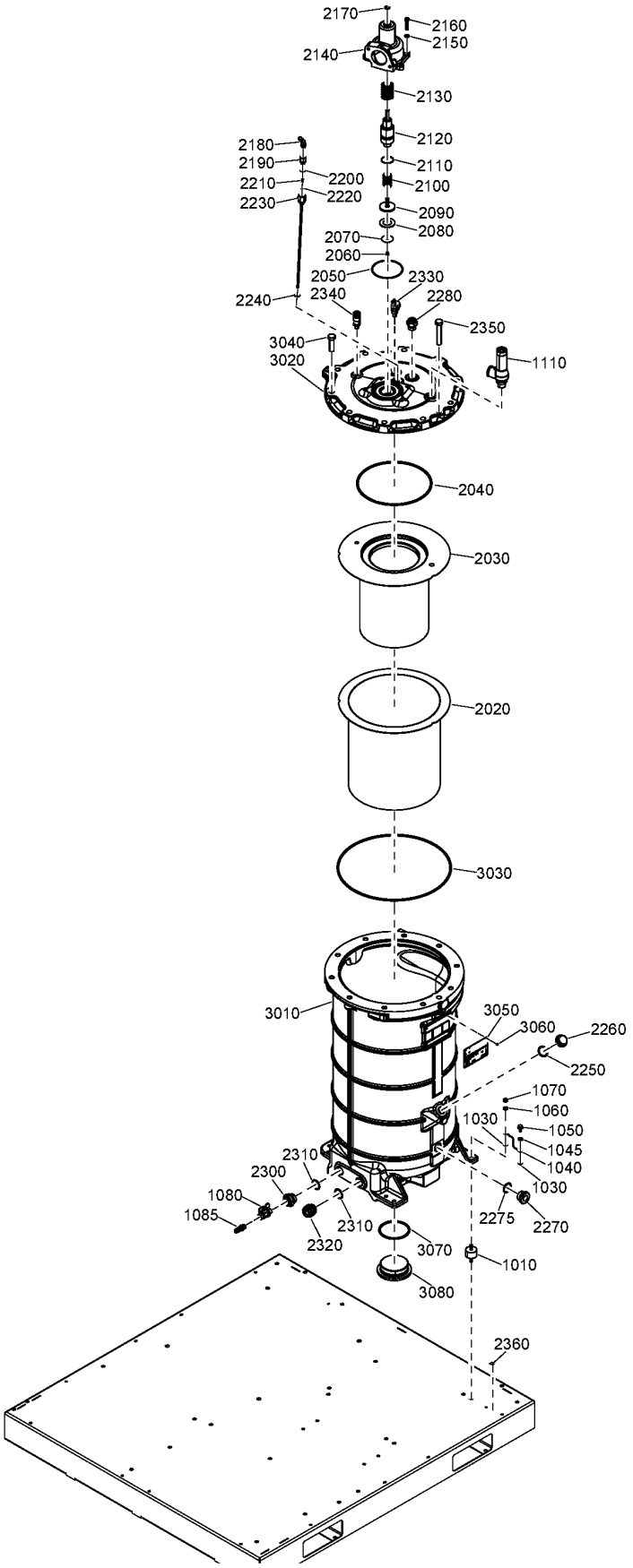

Ref	Part Number	Qty	Name	Validity
2240 •	0663 2113 43	1	O-RING	**(09/03/2017 - 12/07/2017)** ((MODEL:GA110VP_16 + MOVOL:380V + OILTYP:RIF , MODEL:GA75VP_16 + MOVOL:460V + OILTYP:RXD) + CAPPRM:ASME + FREQ:60HZ , CAPPRM:CE + FREQ:50HZ + MOVOL:400V + OILTYP:RIF) + COOL:AIR **(13/07/2017 - 19/07/2017)** (((MOVOL:230V , MOVOL:460V) + MODEL:GA75VP_16 + OILTYP:RXD , (MOVOL:380V , MOVOL:460V) + MODEL:GA110VP_16 + OILTYP:RIF) + CAPPRM:ASME + FREQ:60HZ , (MOVOL:400V , MOVOL:500V) + CAPPRM:CE + FREQ:50HZ + OILTYP:RIF) + COOL:AIR **(20/07/2017 - 20/08/2018)** ((((CAPPRM:AS1210 , CAPPRM:CE , CAPPRM:MOM) + MOVOL:400V , CAPPRM:CE + MOVOL:500V) + FREQ:50HZ , (MOVOL:380V , MOVOL:460V) + CAPPRM:ASME + FREQ:60HZ) + OILTYP:RIF , (((FREQ:50HZ , FREQ:60HZ) + MOVOL:200V , FREQ:50HZ + MOVOL:400V , FREQ:60HZ + MOVOL:460V) + CAPPRM:MHLW , (MODEL:GA75VP_16 , MODEL:GA90VP_16) + (MOVOL:230V , MOVOL:460V) + CAPPRM:ASME + FREQ:60HZ) + OILTYP:RXD) + COOL:AIR **(21/08/2018 - 04/12/2018)** ((((CAPPRM:AS1210 , CAPPRM:CE , CAPPRM:MOM) + MOVOL:400V , CAPPRM:CE + MOVOL:500V) + FREQ:50HZ , (MOVOL:380V , MOVOL:460V) + CAPPRM:ASME + FREQ:60HZ) + OILTYP:RIF , CAPPRM:MHLW + MOVOL:200V + OILTYP:RXD) + COOL:AIR , (((COOL:AIR + MOVOL:230V , MOVOL:460V) + (MODEL:GA75VP_16 , MODEL:GA90VP_16) + CAPPRM:ASME , CAPPRM:MHLW + MOVOL:460V) + FREQ:60HZ , CAPPRM:MHLW + FREQ:50HZ + MOVOL:400V) + OILTYP:RXD **(05/12/2018 - 16/01/2020)**
2250 •	0663 2102 15	1	O-RING	**(09/03/2017 - 12/07/2017)** ((MODEL:GA110VP_16 + MOVOL:380V + OILTYP:RIF , MODEL:GA75VP_16 + MOVOL:460V + OILTYP:RXD) + CAPPRM:ASME + FREQ:60HZ , CAPPRM:CE + FREQ:50HZ + MOVOL:400V + OILTYP:RIF) + COOL:AIR **(13/07/2017 - 19/07/2017)** (((MOVOL:230V , MOVOL:460V) + MODEL:GA75VP_16 + OILTYP:RXD , (MOVOL:380V , MOVOL:460V) + MODEL:GA110VP_16 + OILTYP:RIF) + CAPPRM:ASME + FREQ:60HZ , (MOVOL:400V , MOVOL:500V) + CAPPRM:CE + FREQ:50HZ + OILTYP:RIF) + COOL:AIR **(20/07/2017 - 20/08/2018)** ((((CAPPRM:AS1210 , CAPPRM:CE , CAPPRM:MOM) + MOVOL:400V , CAPPRM:CE + MOVOL:500V) + FREQ:50HZ , (MOVOL:380V , MOVOL:460V) + CAPPRM:ASME + FREQ:60HZ) + OILTYP:RIF , (((FREQ:50HZ , FREQ:60HZ) + MOVOL:200V , FREQ:50HZ + MOVOL:400V , FREQ:60HZ + MOVOL:460V) + CAPPRM:MHLW , (MODEL:GA75VP_16 , MODEL:GA90VP_16) + (MOVOL:230V , MOVOL:460V) + CAPPRM:ASME + FREQ:60HZ) + OILTYP:RXD) + COOL:AIR **(21/08/2018 - 04/12/2018)** ((((CAPPRM:AS1210 , CAPPRM:CE , CAPPRM:MOM) + MOVOL:400V , CAPPRM:CE + MOVOL:500V) + FREQ:50HZ , (MOVOL:380V , MOVOL:460V) + CAPPRM:ASME + FREQ:60HZ) + OILTYP:RIF , CAPPRM:MHLW + MOVOL:200V + OILTYP:RXD) + COOL:AIR , (((COOL:AIR + MOVOL:230V , MOVOL:460V) + (MODEL:GA75VP_16 , MODEL:GA90VP_16) + CAPPRM:ASME , CAPPRM:MHLW + MOVOL:460V) + FREQ:60HZ , CAPPRM:MHLW + FREQ:50HZ + MOVOL:400V) + OILTYP:RXD **(05/12/2018 - 30/12/2027)** **(31/12/2027 - ...)** (((CAPPRM:AS1210 , CAPPRM:CE , CAPPRM:MOM) + MOVOL:400V , CAPPRM:CE + COOL:AIR + MOVOL:500V) + FREQ:50HZ , (MOVOL:380V , MOVOL:460V) + CAPPRM:ASME + FREQ:60HZ) + OILTYP:RIF , (((CAPPRM:ASME + FREQ:60HZ + MOVOL:230V , CAPPRM:MHLW + MOVOL:200V) + COOL:AIR , CAPPRM:ASME + FREQ:60HZ + MOVOL:460V) + (MODEL:GA75VP_16 , MODEL:GA90VP_16) , (FREQ:50HZ + MOVOL:400V , FREQ:60HZ + MOVOL:460V) + CAPPRM:MHLW) + OILTYP:RXD

Legend:

CAPPRM:AS1210 - Component approval mechanical:AS1210
CAPPRM:ASME - Component approval mechanical:ASME
CAPPRM:CE - Component approval mechanical:CE
CAPPRM:MHLW - Component approval mechanical:MHLW
CAPPRM:MOM - Component approval mechanical:MOM
COOL:AIR - Cooling:Air cooled
COOL:WATER - Cooling:Water cooled
FREQ:50HZ - Frequency:50 Hz
FREQ:60HZ - Frequency:60 Hz
MODEL:GA110VP_16 - Model:GA 110VSD+
MODEL:GA75VP_16 - Model:GA 75VSD+
MODEL:GA90VP_16 - Model:GA 90VSD+
MOVOL:200V - Supply voltage:200 V
MOVOL:230V - Supply voltage:230 V
MOVOL:380V - Supply voltage:380 V
MOVOL:400V - Supply voltage:400 V
MOVOL:460V - Supply voltage:460 V
MOVOL:500V - Supply voltage:500 V
OILTYP:RIF - Oil type:Roto inject fluid oil
OILTYP:RXD - Oil type:Roto-Xtend Duty Fluid

6.4 - Air receiver AS1210, CE, MOM - RIF Oil, MHLW - RXD Oil

(((CAPPRM:AS1210 , CAPPRM:CE , CAPPRM:MOM) + MOVOL:400V , CAPPRM:CE + COOL:AIR + MOVOL:500V) + FREQ:50HZ , (MOVOL:380V , MOVOL:460V) + CAPPRM:ASME + FREQ:60HZ) + OILTYP:RIF , ((COOL:AIR + MOVOL:200V , FREQ:50HZ + MOVOL:400V , FREQ:60HZ + MOVOL:460V) + CAPPRM:MHLW , (COOL:AIR + MOVOL:230V , MOVOL:460V) + (MODEL:GA75VP_16 , MODEL:GA90VP_16) + CAPPRM:ASME + FREQ:60HZ) + OILTYP:RXD

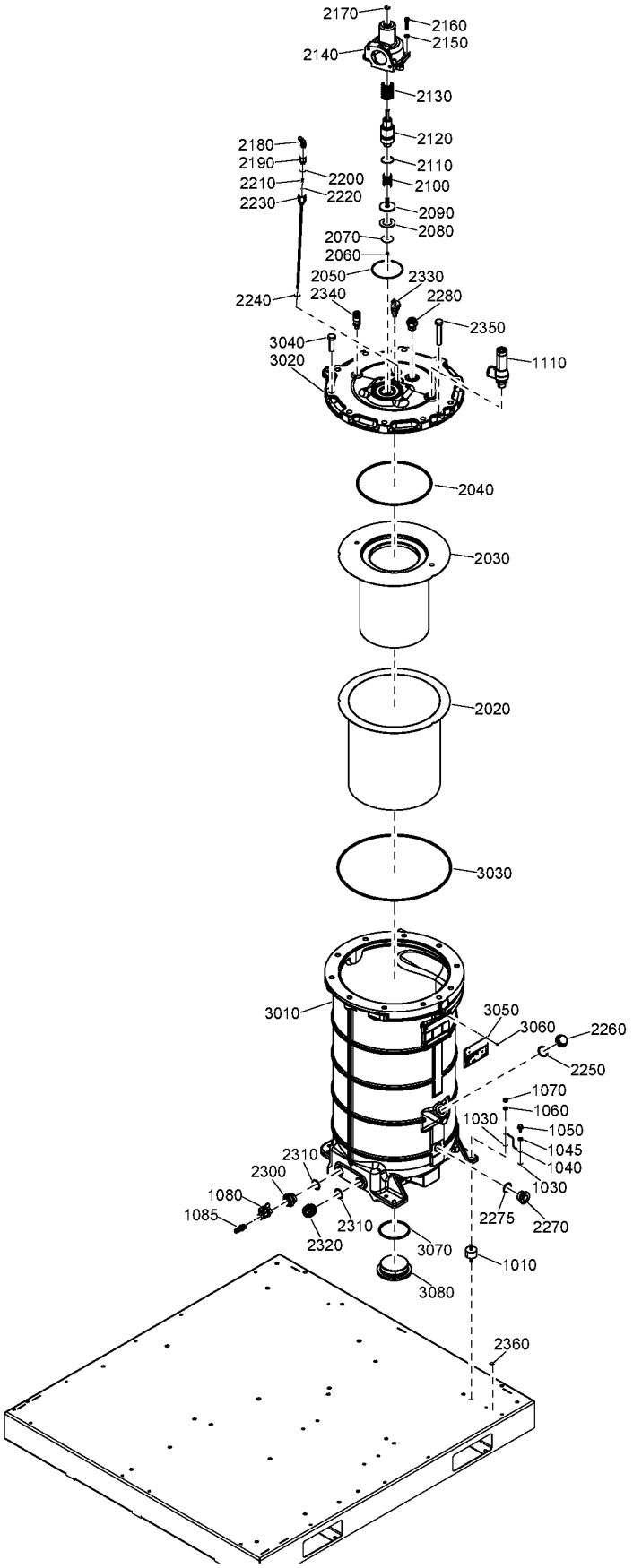

Ref	Part Number	Qty	Name	Validity
2260 •	1202 8992 00	1	PLUG	**(09/03/2017 - 12/07/2017)** ((MODEL:GA110VP_16 + MOVOL:380V + OILTYP:RIF , MODEL:GA75VP_16 + MOVOL:460V + OILTYP:RXD) + CAPPRM:ASME + FREQ:60HZ , CAPPRM:CE + FREQ:50HZ + MOVOL:400V + OILTYP:RIF) + COOL:AIR **(13/07/2017 - 19/07/2017)** (((MOVOL:230V , MOVOL:460V) + MODEL:GA75VP_16 + OILTYP:RXD , (MOVOL:380V , MOVOL:460V) + MODEL:GA110VP_16 + OILTYP:RIF) + CAPPRM:ASME + FREQ:60HZ , (MOVOL:400V , MOVOL:500V) + CAPPRM:CE + FREQ:50HZ + OILTYP:RIF) + COOL:AIR **(20/07/2017 - 20/08/2018)** ((((CAPPRM:AS1210 , CAPPRM:CE , CAPPRM:MOM) + MOVOL:400V , CAPPRM:CE + MOVOL:500V) + FREQ:50HZ , (MOVOL:380V , MOVOL:460V) + CAPPRM:ASME + FREQ:60HZ) + OILTYP:RIF , (((FREQ:50HZ , FREQ:60HZ) + MOVOL:200V , FREQ:50HZ + MOVOL:400V , FREQ:60HZ + MOVOL:460V) + CAPPRM:MHLW , (MODEL:GA75VP_16 , MODEL:GA90VP_16) + (MOVOL:230V , MOVOL:460V) + CAPPRM:ASME + FREQ:60HZ) + OILTYP:RXD) + COOL:AIR **(21/08/2018 - 04/12/2018)** ((((CAPPRM:AS1210 , CAPPRM:CE , CAPPRM:MOM) + MOVOL:400V , CAPPRM:CE + MOVOL:500V) + FREQ:50HZ , (MOVOL:380V , MOVOL:460V) + CAPPRM:ASME + FREQ:60HZ) + OILTYP:RIF , CAPPRM:MHLW + MOVOL:200V + OILTYP:RXD) + COOL:AIR , (((COOL:AIR + MOVOL:230V , MOVOL:460V) + (MODEL:GA75VP_16 , MODEL:GA90VP_16) + CAPPRM:ASME , CAPPRM:MHLW + MOVOL:460V) + FREQ:60HZ , CAPPRM:MHLW + FREQ:50HZ + MOVOL:400V) + OILTYP:RXD **(05/12/2018 - 30/12/2027)** **(31/12/2027 - ...)** (((CAPPRM:AS1210 , CAPPRM:CE , CAPPRM:MOM) + MOVOL:400V , CAPPRM:CE + COOL:AIR + MOVOL:500V) + FREQ:50HZ , (MOVOL:380V , MOVOL:460V) + CAPPRM:ASME + FREQ:60HZ) + OILTYP:RIF , (((CAPPRM:ASME + FREQ:60HZ + MOVOL:230V , CAPPRM:MHLW + MOVOL:200V) + COOL:AIR , CAPPRM:ASME + FREQ:60HZ + MOVOL:460V) + (MODEL:GA75VP_16 , MODEL:GA90VP_16) , (FREQ:50HZ + MOVOL:400V , FREQ:60HZ + MOVOL:460V) + CAPPRM:MHLW) + OILTYP:RXD
2270 •	1092 0000 72	1	SIGHT GLASS	**(20/07/2017 - 20/08/2018)** ((((CAPPRM:AS1210 , CAPPRM:CE , CAPPRM:MOM) + MOVOL:400V , CAPPRM:CE + MOVOL:500V) + FREQ:50HZ , (MOVOL:380V , MOVOL:460V) + CAPPRM:ASME + FREQ:60HZ) + OILTYP:RIF , (((FREQ:50HZ , FREQ:60HZ) + MOVOL:200V , FREQ:50HZ + MOVOL:400V , FREQ:60HZ + MOVOL:460V) + CAPPRM:MHLW , (MODEL:GA75VP_16 , MODEL:GA90VP_16) + (MOVOL:230V , MOVOL:460V) + CAPPRM:ASME + FREQ:60HZ) + OILTYP:RXD) + COOL:AIR **(21/08/2018 - 04/12/2018)** ((((CAPPRM:AS1210 , CAPPRM:CE , CAPPRM:MOM) + MOVOL:400V , CAPPRM:CE + MOVOL:500V) + FREQ:50HZ , (MOVOL:380V , MOVOL:460V) + CAPPRM:ASME + FREQ:60HZ) + OILTYP:RIF , CAPPRM:MHLW + MOVOL:200V + OILTYP:RXD) + COOL:AIR , (((COOL:AIR + MOVOL:230V , MOVOL:460V) + (MODEL:GA75VP_16 , MODEL:GA90VP_16) + CAPPRM:ASME , CAPPRM:MHLW + MOVOL:460V) + FREQ:60HZ , CAPPRM:MHLW + FREQ:50HZ + MOVOL:400V) + OILTYP:RXD **(05/12/2018 - 30/12/2027)** **(31/12/2027 - ...)** (((CAPPRM:AS1210 , CAPPRM:CE , CAPPRM:MOM) + MOVOL:400V , CAPPRM:CE + COOL:AIR + MOVOL:500V) + FREQ:50HZ , (MOVOL:380V , MOVOL:460V) + CAPPRM:ASME + FREQ:60HZ) + OILTYP:RIF , (((CAPPRM:ASME + FREQ:60HZ + MOVOL:230V , CAPPRM:MHLW + MOVOL:200V) + COOL:AIR , CAPPRM:ASME + FREQ:60HZ + MOVOL:460V) + (MODEL:GA75VP_16 , MODEL:GA90VP_16) , (FREQ:50HZ + MOVOL:400V , FREQ:60HZ + MOVOL:460V) + CAPPRM:MHLW) + OILTYP:RXD

Legend:

CAPPRM:AS1210 - Component approval mechanical:AS1210
CAPPRM:ASME - Component approval mechanical:ASME
CAPPRM:CE - Component approval mechanical:CE
CAPPRM:MHLW - Component approval mechanical:MHLW
CAPPRM:MOM - Component approval mechanical:MOM
COOL:AIR - Cooling:Air cooled
COOL:WATER - Cooling:Water cooled
FREQ:50HZ - Frequency:50 Hz
FREQ:60HZ - Frequency:60 Hz
MODEL:GA110VP_16 - Model:GA 110VSD+
MODEL:GA75VP_16 - Model:GA 75VSD+
MODEL:GA90VP_16 - Model:GA 90VSD+
MOVOL:200V - Supply voltage:200 V
MOVOL:230V - Supply voltage:230 V
MOVOL:380V - Supply voltage:380 V
MOVOL:400V - Supply voltage:400 V
MOVOL:460V - Supply voltage:460 V
MOVOL:500V - Supply voltage:500 V
OILTYP:RIF - Oil type:Roto inject fluid oil
OILTYP:RXD - Oil type:Roto-Xtend Duty Fluid

6.4 - Air receiver AS1210, CE, MOM - RIF Oil, MHLW - RXD Oil

(((CAPPRM:AS1210 , CAPPRM:CE , CAPPRM:MOM) + MOVOL:400V , CAPPRM:CE + COOL:AIR + MOVOL:500V) + FREQ:50HZ , (MOVOL:380V , MOVOL:460V) + CAPPRM:ASME + FREQ:60HZ) + OILTYP:RIF , ((COOL:AIR + MOVOL:200V , FREQ:50HZ + MOVOL:400V , FREQ:60HZ + MOVOL:460V) + CAPPRM:MHLW , (COOL:AIR + MOVOL:230V , MOVOL:460V) + (MODEL:GA75VP_16 , MODEL:GA90VP_16) + CAPPRM:ASME + FREQ:60HZ) + OILTYP:RXD

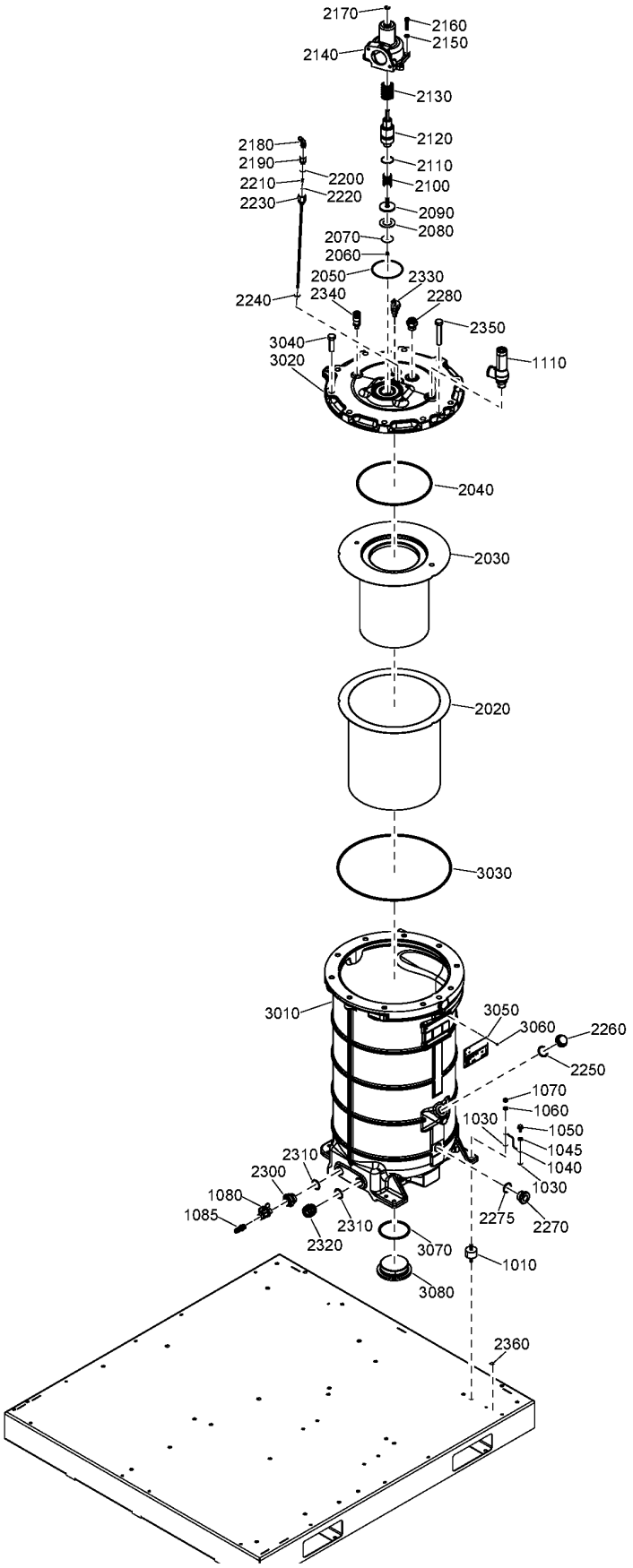

6.4 - Air receiver AS1210, CE, MOM - RIF Oil, MHLW - RXD Oil

(((CAPPRM:AS1210 , CAPPRM:CE , CAPPRM:MOM) + MOVOL:400V , CAPPRM:CE + COOL:AIR + MOVOL:500V) + FREQ:50HZ , (MOVOL:380V , MOVOL:460V) + CAPPRM:ASME + FREQ:60HZ) + OILTYP:RIF , ((COOL:AIR + MOVOL:200V , FREQ:50HZ + MOVOL:400V , FREQ:60HZ + MOVOL:460V) + CAPPRM:MHLW , (COOL:AIR + MOVOL:230V , MOVOL:460V) + (MODEL:GA75VP_16 , MODEL:GA90VP_16) + CAPPRM:ASME + FREQ:60HZ) + OILTYP:RXD

Ref	Part Number	Qty	Name	Validity
2270	• ~~1513 0168 00~~	1	SIGHT GLASS	**(09/03/2017 - 12/07/2017)** ((MODEL:GA110VP_16 + MOVOL:380V + OILTYP:RIF , MODEL:GA75VP_16 + MOVOL:460V + OILTYP:RXD) + CAPPRM:ASME + FREQ:60HZ , CAPPRM:CE + FREQ:50HZ + MOVOL:400V + OILTYP:RIF) + COOL:AIR **(13/07/2017 - 19/07/2017)** (((MOVOL:230V , MOVOL:460V) + MODEL:GA75VP_16 + OILTYP:RXD , (MOVOL:380V , MOVOL:460V) + MODEL:GA110VP_16 + OILTYP:RIF) + CAPPRM:ASME + FREQ:60HZ , (MOVOL:400V , MOVOL:500V) + CAPPRM:CE + FREQ:50HZ + OILTYP:RIF) + COOL:AIR
	Substituted by:	1092 0000 72 - SIGHT GLASS (quantity: 1)		
2275	• 0663 3130 00	1	O-RING	**(20/07/2017 - 20/08/2018)** ((((CAPPRM:AS1210 , CAPPRM:CE , CAPPRM:MOM) + MOVOL:400V , CAPPRM:CE + MOVOL:500V) + FREQ:50HZ , (MOVOL:380V , MOVOL:460V) + CAPPRM:ASME + FREQ:60HZ) + OILTYP:RIF , (((FREQ:50HZ , FREQ:60HZ) + MOVOL:200V , FREQ:50HZ + MOVOL:400V , FREQ:60HZ + MOVOL:460V) + CAPPRM:MHLW , (MODEL:GA75VP_16 , MODEL:GA90VP_16) + (MOVOL:230V , MOVOL:460V) + CAPPRM:ASME + FREQ:60HZ) + OILTYP:RXD) + COOL:AIR **(21/08/2018 - 04/12/2018)** ((((CAPPRM:AS1210 , CAPPRM:CE , CAPPRM:MOM) + MOVOL:400V , CAPPRM:CE + MOVOL:500V) + FREQ:50HZ , (MOVOL:380V , MOVOL:460V) + CAPPRM:ASME + FREQ:60HZ) + OILTYP:RIF , CAPPRM:MHLW + MOVOL:200V + OILTYP:RXD) + COOL:AIR , (((COOL:AIR + MOVOL:230V , MOVOL:460V) + (MODEL:GA75VP_16 , MODEL:GA90VP_16) + CAPPRM:ASME , CAPPRM:MHLW + MOVOL:460V) + FREQ:60HZ , CAPPRM:MHLW + FREQ:50HZ + MOVOL:400V) + OILTYP:RXD **(05/12/2018 - 30/12/2027)** **(31/12/2027 - ...)** (((CAPPRM:AS1210 , CAPPRM:CE , CAPPRM:MOM) + MOVOL:400V , CAPPRM:CE + COOL:AIR + MOVOL:500V) + FREQ:50HZ , (MOVOL:380V , MOVOL:460V) + CAPPRM:ASME + FREQ:60HZ) + OILTYP:RIF , (((CAPPRM:ASME + FREQ:60HZ + MOVOL:230V , CAPPRM:MHLW + MOVOL:200V) + COOL:AIR , CAPPRM:ASME + FREQ:60HZ + MOVOL:460V) + (MODEL:GA75VP_16 , MODEL:GA90VP_16) , (FREQ:50HZ + MOVOL:400V , FREQ:60HZ + MOVOL:460V) + CAPPRM:MHLW) + OILTYP:RXD

Legend:

CAPPRM:AS1210 - Component approval mechanical:AS1210	CAPPRM:ASME - Component approval mechanical:ASME	CAPPRM:CE - Component approval mechanical:CE
CAPPRM:MHLW - Component approval mechanical:MHLW	CAPPRM:MOM - Component approval mechanical:MOM	COOL:AIR - Cooling:Air cooled
COOL:WATER - Cooling:Water cooled	FREQ:50HZ - Frequency:50 Hz	FREQ:60HZ - Frequency:60 Hz
MODEL:GA110VP_16 - Model:GA 110VSD+	MODEL:GA75VP_16 - Model:GA 75VSD+	MODEL:GA90VP_16 - Model:GA 90VSD+
MOVOL:200V - Supply voltage:200 V	MOVOL:230V - Supply voltage:230 V	MOVOL:380V - Supply voltage:380 V
MOVOL:400V - Supply voltage:400 V	MOVOL:460V - Supply voltage:460 V	MOVOL:500V - Supply voltage:500 V
OILTYP:RIF - Oil type:Roto inject fluid oil	OILTYP:RXD - Oil type:Roto-Xtend Duty Fluid	

6.4 - Air receiver AS1210, CE, MOM - RIF Oil, MHLW - RXD Oil

(((CAPPRM:AS1210 , CAPPRM:CE , CAPPRM:MOM) + MOVOL:400V , CAPPRM:CE + COOL:AIR + MOVOL:500V) + FREQ:50HZ , (MOVOL:380V , MOVOL:460V) + CAPPRM:ASME + FREQ:60HZ) + OILTYP:RIF , ((COOL:AIR + MOVOL:200V , FREQ:50HZ + MOVOL:400V , FREQ:60HZ + MOVOL:460V) + CAPPRM:MHLW , (COOL:AIR + MOVOL:230V , MOVOL:460V) + (MODEL:GA75VP_16 , MODEL:GA90VP_16) + CAPPRM:ASME + FREQ:60HZ) + OILTYP:RXD

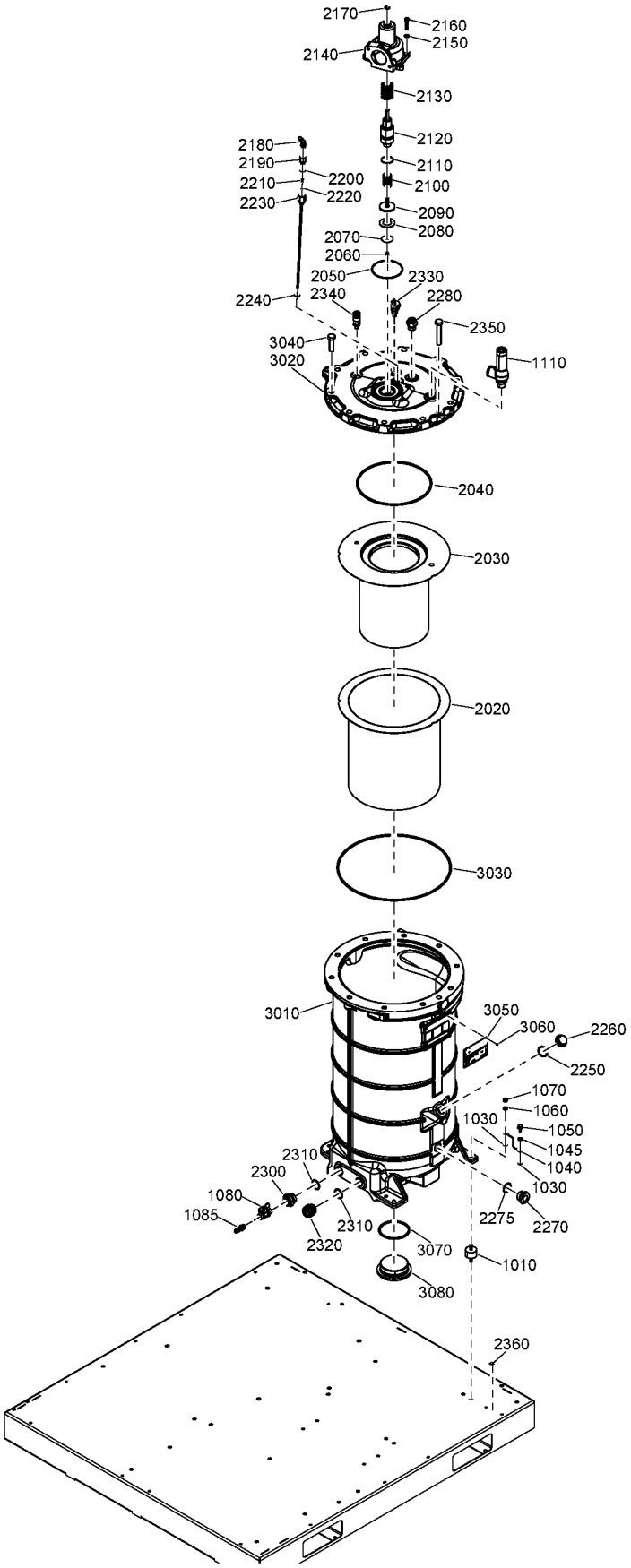

Ref	Part Number	Qty	Name	Validity
2280	• 0580 0017 36	1	NIPPLE	**(09/03/2017 - 12/07/2017)** ((MODEL:GA110VP_16 + MOVOL:380V + OILTYP:RIF , MODEL:GA75VP_16 + MOVOL:460V + OILTYP:RXD) + CAPPRM:ASME + FREQ:60HZ , CAPPRM:CE + FREQ:50HZ + MOVOL:400V + OILTYP:RIF) + COOL:AIR **(13/07/2017 - 19/07/2017)** (((MOVOL:230V , MOVOL:460V) + MODEL:GA75VP_16 + OILTYP:RXD , (MOVOL:380V , MOVOL:460V) + MODEL:GA110VP_16 + OILTYP:RIF) + CAPPRM:ASME + FREQ:60HZ , (MOVOL:400V , MOVOL:500V) + CAPPRM:CE + FREQ:50HZ + OILTYP:RIF) + COOL:AIR **(20/07/2017 - 20/08/2018)** ((((CAPPRM:AS1210 , CAPPRM:CE , CAPPRM:MOM) + MOVOL:400V , CAPPRM:CE + MOVOL:500V) + FREQ:50HZ , (MOVOL:380V , MOVOL:460V) + CAPPRM:ASME + FREQ:60HZ) + OILTYP:RIF , (((FREQ:50HZ , FREQ:60HZ) + MOVOL:200V , FREQ:50HZ + MOVOL:400V , FREQ:60HZ + MOVOL:460V) + CAPPRM:MHLW , (MODEL:GA75VP_16 , MODEL:GA90VP_16) + (MOVOL:230V , MOVOL:460V) + CAPPRM:ASME + FREQ:60HZ) + OILTYP:RXD) + COOL:AIR **(21/08/2018 - 04/12/2018)** ((((CAPPRM:AS1210 , CAPPRM:CE , CAPPRM:MOM) + MOVOL:400V , CAPPRM:CE + MOVOL:500V) + FREQ:50HZ , (MOVOL:380V , MOVOL:460V) + CAPPRM:ASME + FREQ:60HZ) + OILTYP:RIF , CAPPRM:MHLW + MOVOL:200V + OILTYP:RXD) + COOL:AIR , (((COOL:AIR + MOVOL:230V , MOVOL:460V) + (MODEL:GA75VP_16 , MODEL:GA90VP_16) + CAPPRM:ASME , CAPPRM:MHLW + MOVOL:460V) + FREQ:60HZ , CAPPRM:MHLW + FREQ:50HZ + MOVOL:400V) + OILTYP:RXD **(05/12/2018 - 30/12/2027)** **(31/12/2027 - ...)** (((CAPPRM:AS1210 , CAPPRM:CE , CAPPRM:MOM) + MOVOL:400V , CAPPRM:CE + COOL:AIR + MOVOL:500V) + FREQ:50HZ , (MOVOL:380V , MOVOL:460V) + CAPPRM:ASME + FREQ:60HZ) + OILTYP:RIF , (((CAPPRM:ASME + FREQ:60HZ + MOVOL:230V , CAPPRM:MHLW + MOVOL:200V) + COOL:AIR , CAPPRM:ASME + FREQ:60HZ + MOVOL:460V) + (MODEL:GA75VP_16 , MODEL:GA90VP_16) , (FREQ:50HZ + MOVOL:400V , FREQ:60HZ + MOVOL:460V) + CAPPRM:MHLW) + OILTYP:RXD
2300	• 1625 5934 00	1	NIPPLE	**(09/03/2017 - 12/07/2017)** ((MODEL:GA110VP_16 + MOVOL:380V + OILTYP:RIF , MODEL:GA75VP_16 + MOVOL:460V + OILTYP:RXD) + CAPPRM:ASME + FREQ:60HZ , CAPPRM:CE + FREQ:50HZ + MOVOL:400V + OILTYP:RIF) + COOL:AIR **(13/07/2017 - 19/07/2017)** (((MOVOL:230V , MOVOL:460V) + MODEL:GA75VP_16 + OILTYP:RXD , (MOVOL:380V , MOVOL:460V) + MODEL:GA110VP_16 + OILTYP:RIF) + CAPPRM:ASME + FREQ:60HZ , (MOVOL:400V , MOVOL:500V) + CAPPRM:CE + FREQ:50HZ + OILTYP:RIF) + COOL:AIR **(20/07/2017 - 20/08/2018)** ((((CAPPRM:AS1210 , CAPPRM:CE , CAPPRM:MOM) + MOVOL:400V , CAPPRM:CE + MOVOL:500V) + FREQ:50HZ , (MOVOL:380V , MOVOL:460V) + CAPPRM:ASME + FREQ:60HZ) + OILTYP:RIF , (((FREQ:50HZ , FREQ:60HZ) + MOVOL:200V , FREQ:50HZ + MOVOL:400V , FREQ:60HZ + MOVOL:460V) + CAPPRM:MHLW , (MODEL:GA75VP_16 , MODEL:GA90VP_16) + (MOVOL:230V , MOVOL:460V) + CAPPRM:ASME + FREQ:60HZ) + OILTYP:RXD) + COOL:AIR **(21/08/2018 - 04/12/2018)** ((((CAPPRM:AS1210 , CAPPRM:CE , CAPPRM:MOM) + MOVOL:400V , CAPPRM:CE + MOVOL:500V) + FREQ:50HZ , (MOVOL:380V , MOVOL:460V) + CAPPRM:ASME + FREQ:60HZ) + OILTYP:RIF , CAPPRM:MHLW + MOVOL:200V + OILTYP:RXD) + COOL:AIR , (((COOL:AIR + MOVOL:230V , MOVOL:460V) + (MODEL:GA75VP_16 , MODEL:GA90VP_16) + CAPPRM:ASME , CAPPRM:MHLW + MOVOL:460V) + FREQ:60HZ , CAPPRM:MHLW + FREQ:50HZ + MOVOL:400V) + OILTYP:RXD **(05/12/2018 - 30/12/2027)** **(31/12/2027 - ...)** (((CAPPRM:AS1210 , CAPPRM:CE , CAPPRM:MOM) + MOVOL:400V , CAPPRM:CE + COOL:AIR + MOVOL:500V) + FREQ:50HZ , (MOVOL:380V , MOVOL:460V) + CAPPRM:ASME + FREQ:60HZ) + OILTYP:RIF , (((CAPPRM:ASME + FREQ:60HZ + MOVOL:230V , CAPPRM:MHLW + MOVOL:200V) + COOL:AIR , CAPPRM:ASME + FREQ:60HZ + MOVOL:460V) + (MODEL:GA75VP_16 , MODEL:GA90VP_16) , (FREQ:50HZ + MOVOL:400V , FREQ:60HZ + MOVOL:460V) + CAPPRM:MHLW) + OILTYP:RXD

Legend:

CAPPRM:AS1210 - Component approval mechanical:AS1210
CAPPRM:ASME - Component approval mechanical:ASME
CAPPRM:CE - Component approval mechanical:CE
CAPPRM:MHLW - Component approval mechanical:MHLW
CAPPRM:MOM - Component approval mechanical:MOM
COOL:AIR - Cooling:Air cooled
COOL:WATER - Cooling:Water cooled
FREQ:50HZ - Frequency:50 Hz
FREQ:60HZ - Frequency:60 Hz
MODEL:GA110VP_16 - Model:GA 110VSD+
MODEL:GA75VP_16 - Model:GA 75VSD+
MODEL:GA90VP_16 - Model:GA 90VSD+
MOVOL:200V - Supply voltage:200 V
MOVOL:230V - Supply voltage:230 V
MOVOL:380V - Supply voltage:380 V
MOVOL:400V - Supply voltage:400 V
MOVOL:460V - Supply voltage:460 V
MOVOL:500V - Supply voltage:500 V
OILTYP:RIF - Oil type:Roto inject fluid oil
OILTYP:RXD - Oil type:Roto-Xtend Duty Fluid

6.4 - Air receiver AS1210, CE, MOM - RIF Oil, MHLW - RXD Oil

(((CAPPRM:AS1210 , CAPPRM:CE , CAPPRM:MOM) + MOVOL:400V , CAPPRM:CE + COOL:AIR + MOVOL:500V) + FREQ:50HZ , (MOVOL:380V , MOVOL:460V) + CAPPRM:ASME + FREQ:60HZ) + OILTYP:RIF , ((COOL:AIR + MOVOL:200V , FREQ:50HZ + MOVOL:400V , FREQ:60HZ + MOVOL:460V) + CAPPRM:MHLW , (COOL:AIR + MOVOL:230V , MOVOL:460V) + (MODEL:GA75VP_16 , MODEL:GA90VP_16) + CAPPRM:ASME + FREQ:60HZ) + OILTYP:RXD

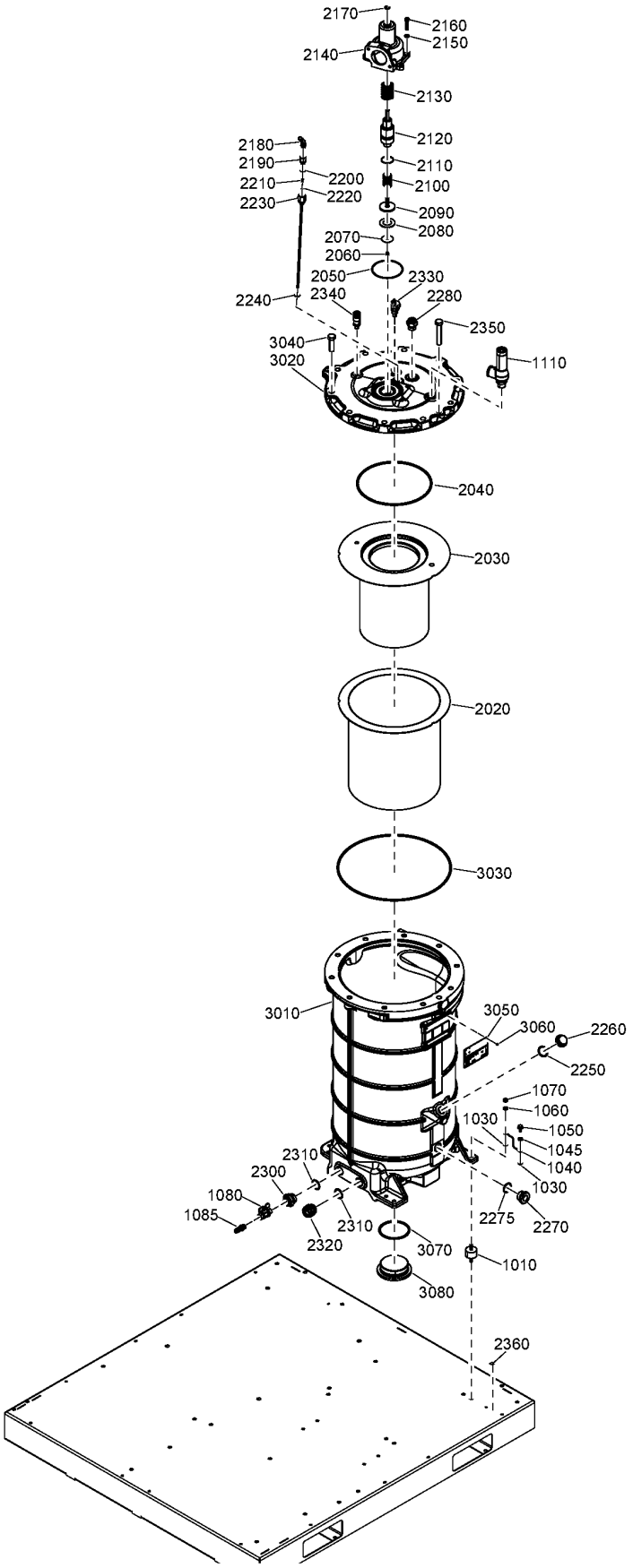

6.4 - Air receiver AS1210, CE, MOM - RIF Oil, MHLW - RXD Oil

(((CAPPRM:AS1210 , CAPPRM:CE , CAPPRM:MOM) + MOVOL:400V , CAPPRM:CE + COOL:AIR + MOVOL:500V) + FREQ:50HZ , (MOVOL:380V , MOVOL:460V) + CAPPRM:ASME + FREQ:60HZ) + OILTYP:RIF , ((COOL:AIR + MOVOL:200V , FREQ:50HZ + MOVOL:400V , FREQ:60HZ + MOVOL:460V) + CAPPRM:MHLW , (COOL:AIR + MOVOL:230V , MOVOL:460V) + (MODEL:GA75VP_16 , MODEL:GA90VP_16) + CAPPRM:ASME + FREQ:60HZ) + OILTYP:RXD

Ref	Part Number	Qty	Name	Validity
2310 •	0663 3130 00	2	O-RING	**(09/03/2017 - 12/07/2017)** ((MODEL:GA110VP_16 + MOVOL:380V + OILTYP:RIF , MODEL:GA75VP_16 + MOVOL:460V + OILTYP:RXD) + CAPPRM:ASME + FREQ:60HZ , CAPPRM:CE + FREQ:50HZ + MOVOL:400V + OILTYP:RIF) + COOL:AIR **(13/07/2017 - 19/07/2017)** (((MOVOL:230V , MOVOL:460V) + MODEL:GA75VP_16 + OILTYP:RXD , (MOVOL:380V , MOVOL:460V) + MODEL:GA110VP_16 + OILTYP:RIF) + CAPPRM:ASME + FREQ:60HZ , (MOVOL:400V , MOVOL:500V) + CAPPRM:CE + FREQ:50HZ + OILTYP:RIF) + COOL:AIR **(20/07/2017 - 20/08/2018)** ((((CAPPRM:AS1210 , CAPPRM:CE , CAPPRM:MOM) + MOVOL:400V , CAPPRM:CE + MOVOL:500V) + FREQ:50HZ , (MOVOL:380V , MOVOL:460V) + CAPPRM:ASME + FREQ:60HZ) + OILTYP:RIF , (((FREQ:50HZ , FREQ:60HZ) + MOVOL:200V , FREQ:50HZ + MOVOL:400V , FREQ:60HZ + MOVOL:460V) + CAPPRM:MHLW , (MODEL:GA75VP_16 , MODEL:GA90VP_16) + (MOVOL:230V , MOVOL:460V) + CAPPRM:ASME + FREQ:60HZ) + OILTYP:RXD) + COOL:AIR **(21/08/2018 - 04/12/2018)** ((((CAPPRM:AS1210 , CAPPRM:CE , CAPPRM:MOM) + MOVOL:400V , CAPPRM:CE + MOVOL:500V) + FREQ:50HZ , (MOVOL:380V , MOVOL:460V) + CAPPRM:ASME + FREQ:60HZ) + OILTYP:RIF , CAPPRM:MHLW + MOVOL:200V + OILTYP:RXD) + COOL:AIR , (((COOL:AIR + MOVOL:230V , MOVOL:460V) + (MODEL:GA75VP_16 , MODEL:GA90VP_16) + CAPPRM:ASME , CAPPRM:MHLW + MOVOL:460V) + FREQ:60HZ , CAPPRM:MHLW + FREQ:50HZ + MOVOL:400V) + OILTYP:RXD **(05/12/2018 - 30/12/2027)** **(31/12/2027 - ...)** (((CAPPRM:AS1210 , CAPPRM:CE , CAPPRM:MOM) + MOVOL:400V , CAPPRM:CE + COOL:AIR + MOVOL:500V) + FREQ:50HZ , (MOVOL:380V , MOVOL:460V) + CAPPRM:ASME + FREQ:60HZ) + OILTYP:RIF , (((CAPPRM:ASME + FREQ:60HZ + MOVOL:230V , CAPPRM:MHLW + MOVOL:200V) + COOL:AIR , CAPPRM:ASME + FREQ:60HZ + MOVOL:460V) + (MODEL:GA75VP_16 , MODEL:GA90VP_16) , (FREQ:50HZ + MOVOL:400V , FREQ:60HZ + MOVOL:460V) + CAPPRM:MHLW) + OILTYP:RXD
2320 •	1625 4290 00	1	NIPPLE	**(09/03/2017 - 12/07/2017)** ((MODEL:GA110VP_16 + MOVOL:380V + OILTYP:RIF , MODEL:GA75VP_16 + MOVOL:460V + OILTYP:RXD) + CAPPRM:ASME + FREQ:60HZ , CAPPRM:CE + FREQ:50HZ + MOVOL:400V + OILTYP:RIF) + COOL:AIR **(13/07/2017 - 19/07/2017)** (((MOVOL:230V , MOVOL:460V) + MODEL:GA75VP_16 + OILTYP:RXD , (MOVOL:380V , MOVOL:460V) + MODEL:GA110VP_16 + OILTYP:RIF) + CAPPRM:ASME + FREQ:60HZ , (MOVOL:400V , MOVOL:500V) + CAPPRM:CE + FREQ:50HZ + OILTYP:RIF) + COOL:AIR **(20/07/2017 - 20/08/2018)** ((((CAPPRM:AS1210 , CAPPRM:CE , CAPPRM:MOM) + MOVOL:400V , CAPPRM:CE + MOVOL:500V) + FREQ:50HZ , (MOVOL:380V , MOVOL:460V) + CAPPRM:ASME + FREQ:60HZ) + OILTYP:RIF , (((FREQ:50HZ , FREQ:60HZ) + MOVOL:200V , FREQ:50HZ + MOVOL:400V , FREQ:60HZ + MOVOL:460V) + CAPPRM:MHLW , (MODEL:GA75VP_16 , MODEL:GA90VP_16) + (MOVOL:230V , MOVOL:460V) + CAPPRM:ASME + FREQ:60HZ) + OILTYP:RXD) + COOL:AIR **(21/08/2018 - 04/12/2018)** ((((CAPPRM:AS1210 , CAPPRM:CE , CAPPRM:MOM) + MOVOL:400V , CAPPRM:CE + MOVOL:500V) + FREQ:50HZ , (MOVOL:380V , MOVOL:460V) + CAPPRM:ASME + FREQ:60HZ) + OILTYP:RIF , CAPPRM:MHLW + MOVOL:200V + OILTYP:RXD) + COOL:AIR , (((COOL:AIR + MOVOL:230V , MOVOL:460V) + (MODEL:GA75VP_16 , MODEL:GA90VP_16) + CAPPRM:ASME , CAPPRM:MHLW + MOVOL:460V) + FREQ:60HZ , CAPPRM:MHLW + FREQ:50HZ + MOVOL:400V) + OILTYP:RXD **(05/12/2018 - 30/12/2027)** **(31/12/2027 - ...)** (((CAPPRM:AS1210 , CAPPRM:CE , CAPPRM:MOM) + MOVOL:400V , CAPPRM:CE + COOL:AIR + MOVOL:500V) + FREQ:50HZ , (MOVOL:380V , MOVOL:460V) + CAPPRM:ASME + FREQ:60HZ) + OILTYP:RIF , (((CAPPRM:ASME + FREQ:60HZ + MOVOL:230V , CAPPRM:MHLW + MOVOL:200V) + COOL:AIR , CAPPRM:ASME + FREQ:60HZ + MOVOL:460V) + (MODEL:GA75VP_16 , MODEL:GA90VP_16) , (FREQ:50HZ + MOVOL:400V , FREQ:60HZ + MOVOL:460V) + CAPPRM:MHLW) + OILTYP:RXD

Legend:

CAPPRM:AS1210 - Component approval mechanical:AS1210
CAPPRM:ASME - Component approval mechanical:ASME
CAPPRM:CE - Component approval mechanical:CE
CAPPRM:MHLW - Component approval mechanical:MHLW
CAPPRM:MOM - Component approval mechanical:MOM
COOL:AIR - Cooling:Air cooled
COOL:WATER - Cooling:Water cooled
FREQ:50HZ - Frequency:50 Hz
FREQ:60HZ - Frequency:60 Hz
MODEL:GA110VP_16 - Model:GA 110VSD+
MODEL:GA75VP_16 - Model:GA 75VSD+
MODEL:GA90VP_16 - Model:GA 90VSD+
MOVOL:200V - Supply voltage:200 V
MOVOL:230V - Supply voltage:230 V
MOVOL:380V - Supply voltage:380 V
MOVOL:400V - Supply voltage:400 V
MOVOL:460V - Supply voltage:460 V
MOVOL:500V - Supply voltage:500 V
OILTYP:RIF - Oil type:Roto inject fluid oil
OILTYP:RXD - Oil type:Roto-Xtend Duty Fluid

6.4 - Air receiver AS1210, CE, MOM - RIF Oil, MHLW - RXD Oil

(((CAPPRM:AS1210 , CAPPRM:CE , CAPPRM:MOM) + MOVOL:400V , CAPPRM:CE + COOL:AIR + MOVOL:500V) + FREQ:50HZ , (MOVOL:380V , MOVOL:460V) + CAPPRM:ASME + FREQ:60HZ) + OILTYP:RIF , ((COOL:AIR + MOVOL:200V , FREQ:50HZ + MOVOL:400V , FREQ:60HZ + MOVOL:460V) + CAPPRM:MHLW , (COOL:AIR + MOVOL:230V , MOVOL:460V) + (MODEL:GA75VP_16 , MODEL:GA90VP_16) + CAPPRM:ASME + FREQ:60HZ) + OILTYP:RXD

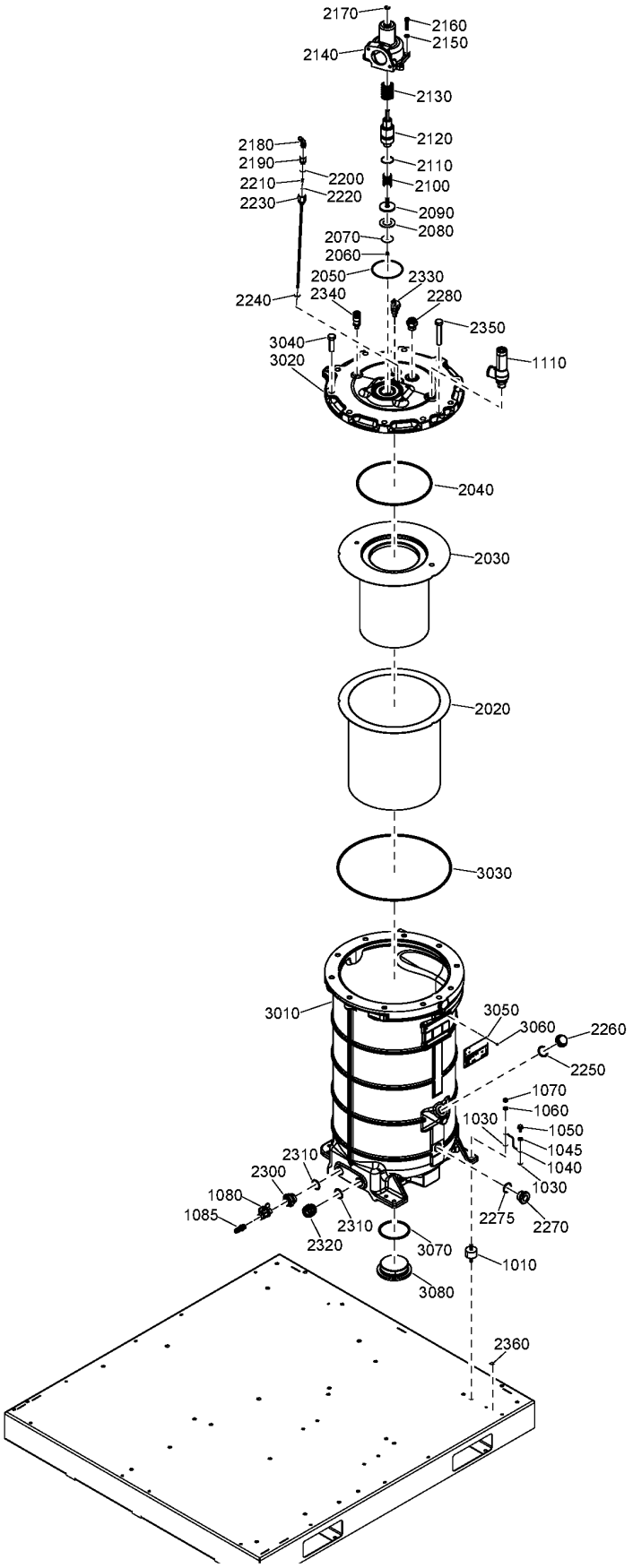

Ref	Part Number	Qty	Name	Validity
2330 •	1089 0637 29	1	TEMPERATURE SWITCH	**(09/03/2017 - 12/07/2017)** ((MODEL:GA110VP_16 + MOVOL:380V + OILTYP:RIF , MODEL:GA75VP_16 + MOVOL:460V + OILTYP:RXD) + CAPPRM:ASME + FREQ:60HZ , CAPPRM:CE + FREQ:50HZ + MOVOL:400V + OILTYP:RIF) + COOL:AIR **(13/07/2017 - 19/07/2017)** (((MOVOL:230V , MOVOL:460V) + MODEL:GA75VP_16 + OILTYP:RXD , (MOVOL:380V , MOVOL:460V) + MODEL:GA110VP_16 + OILTYP:RIF) + CAPPRM:ASME + FREQ:60HZ , (MOVOL:400V , MOVOL:500V) + CAPPRM:CE + FREQ:50HZ + OILTYP:RIF) + COOL:AIR **(20/07/2017 - 20/08/2018)** ((((CAPPRM:AS1210 , CAPPRM:CE , CAPPRM:MOM) + MOVOL:400V , CAPPRM:CE + MOVOL:500V) + FREQ:50HZ , (MOVOL:380V , MOVOL:460V) + CAPPRM:ASME + FREQ:60HZ) + OILTYP:RIF , (((FREQ:50HZ , FREQ:60HZ) + MOVOL:200V , FREQ:50HZ + MOVOL:400V , FREQ:60HZ + MOVOL:460V) + CAPPRM:MHLW , (MODEL:GA75VP_16 , MODEL:GA90VP_16) + (MOVOL:230V , MOVOL:460V) + CAPPRM:ASME + FREQ:60HZ) + OILTYP:RXD) + COOL:AIR **(21/08/2018 - 04/12/2018)** ((((CAPPRM:AS1210 , CAPPRM:CE , CAPPRM:MOM) + MOVOL:400V , CAPPRM:CE + MOVOL:500V) + FREQ:50HZ , (MOVOL:380V , MOVOL:460V) + CAPPRM:ASME + FREQ:60HZ) + OILTYP:RIF , CAPPRM:MHLW + MOVOL:200V + OILTYP:RXD) + COOL:AIR , (((COOL:AIR + MOVOL:230V , MOVOL:460V) + (MODEL:GA75VP_16 , MODEL:GA90VP_16) + CAPPRM:ASME , CAPPRM:MHLW + MOVOL:460V) + FREQ:60HZ , CAPPRM:MHLW + FREQ:50HZ + MOVOL:400V) + OILTYP:RXD **(05/12/2018 - 30/12/2027)** **(31/12/2027 - ...)** (((CAPPRM:AS1210 , CAPPRM:CE , CAPPRM:MOM) + MOVOL:400V , CAPPRM:CE + COOL:AIR + MOVOL:500V) + FREQ:50HZ , (MOVOL:380V , MOVOL:460V) + CAPPRM:ASME + FREQ:60HZ) + OILTYP:RIF , (((CAPPRM:ASME + FREQ:60HZ + MOVOL:230V , CAPPRM:MHLW + MOVOL:200V) + COOL:AIR , CAPPRM:ASME + FREQ:60HZ + MOVOL:460V) + (MODEL:GA75VP_16 , MODEL:GA90VP_16) , (FREQ:50HZ + MOVOL:400V , FREQ:60HZ + MOVOL:460V) + CAPPRM:MHLW) + OILTYP:RXD
2340 •	1089 9625 16	1	PRESSURE SENSOR	**(09/03/2017 - 12/07/2017)** ((MODEL:GA110VP_16 + MOVOL:380V + OILTYP:RIF , MODEL:GA75VP_16 + MOVOL:460V + OILTYP:RXD) + CAPPRM:ASME + FREQ:60HZ , CAPPRM:CE + FREQ:50HZ + MOVOL:400V + OILTYP:RIF) + COOL:AIR **(13/07/2017 - 19/07/2017)** (((MOVOL:230V , MOVOL:460V) + MODEL:GA75VP_16 + OILTYP:RXD , (MOVOL:380V , MOVOL:460V) + MODEL:GA110VP_16 + OILTYP:RIF) + CAPPRM:ASME + FREQ:60HZ , (MOVOL:400V , MOVOL:500V) + CAPPRM:CE + FREQ:50HZ + OILTYP:RIF) + COOL:AIR **(20/07/2017 - 20/08/2018)** ((((CAPPRM:AS1210 , CAPPRM:CE , CAPPRM:MOM) + MOVOL:400V , CAPPRM:CE + MOVOL:500V) + FREQ:50HZ , (MOVOL:380V , MOVOL:460V) + CAPPRM:ASME + FREQ:60HZ) + OILTYP:RIF , (((FREQ:50HZ , FREQ:60HZ) + MOVOL:200V , FREQ:50HZ + MOVOL:400V , FREQ:60HZ + MOVOL:460V) + CAPPRM:MHLW , (MODEL:GA75VP_16 , MODEL:GA90VP_16) + (MOVOL:230V , MOVOL:460V) + CAPPRM:ASME + FREQ:60HZ) + OILTYP:RXD) + COOL:AIR **(21/08/2018 - 04/12/2018)** ((((CAPPRM:AS1210 , CAPPRM:CE , CAPPRM:MOM) + MOVOL:400V , CAPPRM:CE + MOVOL:500V) + FREQ:50HZ , (MOVOL:380V , MOVOL:460V) + CAPPRM:ASME + FREQ:60HZ) + OILTYP:RIF , CAPPRM:MHLW + MOVOL:200V + OILTYP:RXD) + COOL:AIR , (((COOL:AIR + MOVOL:230V , MOVOL:460V) + (MODEL:GA75VP_16 , MODEL:GA90VP_16) + CAPPRM:ASME , CAPPRM:MHLW + MOVOL:460V) + FREQ:60HZ , CAPPRM:MHLW + FREQ:50HZ + MOVOL:400V) + OILTYP:RXD **(05/12/2018 - 30/12/2027)** **(31/12/2027 - ...)** (((CAPPRM:AS1210 , CAPPRM:CE , CAPPRM:MOM) + MOVOL:400V , CAPPRM:CE + COOL:AIR + MOVOL:500V) + FREQ:50HZ , (MOVOL:380V , MOVOL:460V) + CAPPRM:ASME + FREQ:60HZ) + OILTYP:RIF , (((CAPPRM:ASME + FREQ:60HZ + MOVOL:230V , CAPPRM:MHLW + MOVOL:200V) + COOL:AIR , CAPPRM:ASME + FREQ:60HZ + MOVOL:460V) + (MODEL:GA75VP_16 , MODEL:GA90VP_16) , (FREQ:50HZ + MOVOL:400V , FREQ:60HZ + MOVOL:460V) + CAPPRM:MHLW) + OILTYP:RXD

Legend:

CAPPRM:AS1210 - Component approval mechanical:AS1210
CAPPRM:ASME - Component approval mechanical:ASME
CAPPRM:CE - Component approval mechanical:CE
CAPPRM:MHLW - Component approval mechanical:MHLW
CAPPRM:MOM - Component approval mechanical:MOM
COOL:AIR - Cooling:Air cooled
COOL:WATER - Cooling:Water cooled
FREQ:50HZ - Frequency:50 Hz
FREQ:60HZ - Frequency:60 Hz
MODEL:GA110VP_16 - Model:GA 110VSD+
MODEL:GA75VP_16 - Model:GA 75VSD+
MODEL:GA90VP_16 - Model:GA 90VSD+
MOVOL:200V - Supply voltage:200 V
MOVOL:230V - Supply voltage:230 V
MOVOL:380V - Supply voltage:380 V
MOVOL:400V - Supply voltage:400 V
MOVOL:460V - Supply voltage:460 V
MOVOL:500V - Supply voltage:500 V
OILTYP:RIF - Oil type:Roto inject fluid oil
OILTYP:RXD - Oil type:Roto-Xtend Duty Fluid

6.4 - Air receiver AS1210, CE, MOM - RIF Oil, MHLW - RXD Oil

(((CAPPRM:AS1210 , CAPPRM:CE , CAPPRM:MOM) + MOVOL:400V , CAPPRM:CE + COOL:AIR + MOVOL:500V) + FREQ:50HZ , (MOVOL:380V , MOVOL:460V) + CAPPRM:ASME + FREQ:60HZ) + OILTYP:RIF , ((COOL:AIR + MOVOL:200V , FREQ:50HZ + MOVOL:400V , FREQ:60HZ + MOVOL:460V) + CAPPRM:MHLW , (COOL:AIR + MOVOL:230V , MOVOL:460V) + (MODEL:GA75VP_16 , MODEL:GA90VP_16) + CAPPRM:ASME + FREQ:60HZ) + OILTYP:RXD

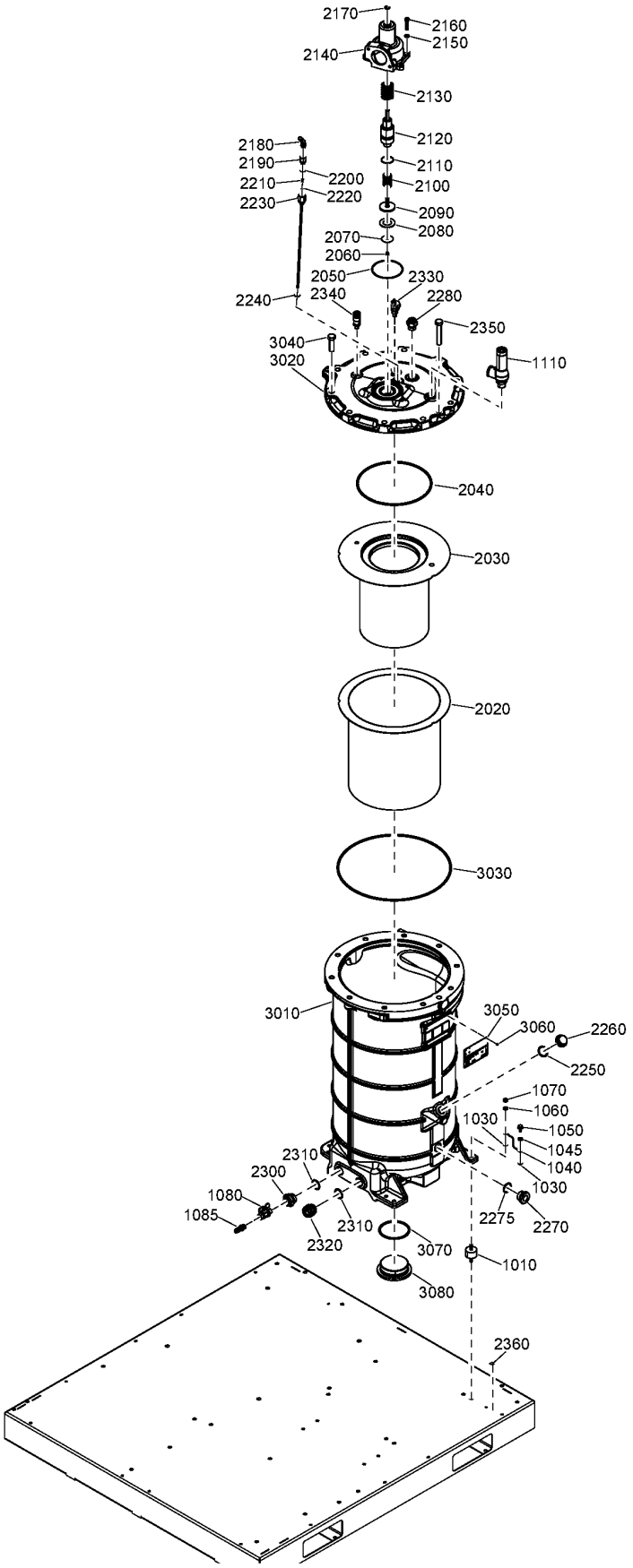

6.4 - Air receiver AS1210, CE, MOM - RIF Oil, MHLW - RXD Oil

(((CAPPRM:AS1210 , CAPPRM:CE , CAPPRM:MOM) + MOVOL:400V , CAPPRM:CE + COOL:AIR + MOVOL:500V) + FREQ:50HZ , (MOVOL:380V , MOVOL:460V) + CAPPRM:ASME + FREQ:60HZ) + OILTYP:RIF , ((COOL:AIR + MOVOL:200V , FREQ:50HZ + MOVOL:400V , FREQ:60HZ + MOVOL:460V) + CAPPRM:MHLW , (COOL:AIR + MOVOL:230V , MOVOL:460V) + (MODEL:GA75VP_16 , MODEL:GA90VP_16) + CAPPRM:ASME + FREQ:60HZ) + OILTYP:RXD

Ref	Part Number	Qty	Name	Validity
2350	• 0147 1111 06	1	SCREW	**(20/07/2017 - 20/08/2018)** ((((CAPPRM:AS1210 , CAPPRM:CE , CAPPRM:MOM) + MOVOL:400V , CAPPRM:CE + MOVOL:500V) + FREQ:50HZ , (MOVOL:380V , MOVOL:460V) + CAPPRM:ASME + FREQ:60HZ) + OILTYP:RIF , (((FREQ:50HZ , FREQ:60HZ) + MOVOL:200V , FREQ:50HZ + MOVOL:400V , FREQ:60HZ + MOVOL:460V) + CAPPRM:MHLW , (MODEL:GA75VP_16 , MODEL:GA90VP_16) + (MOVOL:230V , MOVOL:460V) + CAPPRM:ASME + FREQ:60HZ) + OILTYP:RXD) + COOL:AIR **(21/08/2018 - 04/12/2018)** ((((CAPPRM:AS1210 , CAPPRM:CE , CAPPRM:MOM) + MOVOL:400V , CAPPRM:CE + MOVOL:500V) + FREQ:50HZ , (MOVOL:380V , MOVOL:460V) + CAPPRM:ASME + FREQ:60HZ) + OILTYP:RIF , CAPPRM:MHLW + MOVOL:200V + OILTYP:RXD) + COOL:AIR , (((COOL:AIR + MOVOL:230V , MOVOL:460V) + (MODEL:GA75VP_16 , MODEL:GA90VP_16) + CAPPRM:ASME , CAPPRM:MHLW + MOVOL:460V) + FREQ:60HZ , CAPPRM:MHLW + FREQ:50HZ + MOVOL:400V) + OILTYP:RXD **(05/12/2018 - 30/12/2027)** **(31/12/2027 - ...)** (((CAPPRM:AS1210 , CAPPRM:CE , CAPPRM:MOM) + MOVOL:400V , CAPPRM:CE + COOL:AIR + MOVOL:500V) + FREQ:50HZ , (MOVOL:380V , MOVOL:460V) + CAPPRM:ASME + FREQ:60HZ) + OILTYP:RIF , (((CAPPRM:ASME + FREQ:60HZ + MOVOL:230V , CAPPRM:MHLW + MOVOL:200V) + COOL:AIR , CAPPRM:ASME + FREQ:60HZ + MOVOL:460V) + (MODEL:GA75VP_16 , MODEL:GA90VP_16) , (FREQ:50HZ + MOVOL:400V , FREQ:60HZ + MOVOL:460V) + CAPPRM:MHLW) + OILTYP:RXD
2350	• 0147 1487 12	1	HEXAGON BOLT	**(09/03/2017 - 12/07/2017)** ((MODEL:GA110VP_16 + MOVOL:380V + OILTYP:RIF , MODEL:GA75VP_16 + MOVOL:460V + OILTYP:RXD) + CAPPRM:ASME + FREQ:60HZ , CAPPRM:CE + FREQ:50HZ + MOVOL:400V + OILTYP:RIF) + COOL:AIR **(13/07/2017 - 19/07/2017)** (((MOVOL:230V , MOVOL:460V) + MODEL:GA75VP_16 + OILTYP:RXD , (MOVOL:380V , MOVOL:460V) + MODEL:GA110VP_16 + OILTYP:RIF) + CAPPRM:ASME + FREQ:60HZ , (MOVOL:400V , MOVOL:500V) + CAPPRM:CE + FREQ:50HZ + OILTYP:RIF) + COOL:AIR
2360	• 1079 9923 72	1	LABEL	**(09/03/2017 - 04/05/2017)** ((MODEL:GA110VP_16 + MOVOL:380V + OILTYP:RIF , MODEL:GA75VP_16 + MOVOL:460V + OILTYP:RXD) + CAPPRM:ASME + FREQ:60HZ , CAPPRM:CE + FREQ:50HZ + MOVOL:400V + OILTYP:RIF) + COOL:AIR

Legend:

CAPPRM:AS1210 - Component approval mechanical:AS1210
CAPPRM:ASME - Component approval mechanical:ASME
CAPPRM:CE - Component approval mechanical:CE
CAPPRM:MHLW - Component approval mechanical:MHLW
CAPPRM:MOM - Component approval mechanical:MOM
COOL:AIR - Cooling:Air cooled
COOL:WATER - Cooling:Water cooled
FREQ:50HZ - Frequency:50 Hz
FREQ:60HZ - Frequency:60 Hz
MODEL:GA110VP_16 - Model:GA 110VSD+
MODEL:GA75VP_16 - Model:GA 75VSD+
MODEL:GA90VP_16 - Model:GA 90VSD+
MOVOL:200V - Supply voltage:200 V
MOVOL:230V - Supply voltage:230 V
MOVOL:380V - Supply voltage:380 V
MOVOL:400V - Supply voltage:400 V
MOVOL:460V - Supply voltage:460 V
MOVOL:500V - Supply voltage:500 V
OILTYP:RIF - Oil type:Roto inject fluid oil
OILTYP:RXD - Oil type:Roto-Xtend Duty Fluid

6.4 - Air receiver AS1210, CE, MOM - RIF Oil, MHLW - RXD Oil

(((CAPPRM:AS1210 , CAPPRM:CE , CAPPRM:MOM) + MOVOL:400V , CAPPRM:CE + COOL:AIR + MOVOL:500V) + FREQ:50HZ , (MOVOL:380V , MOVOL:460V) + CAPPRM:ASME + FREQ:60HZ) + OILTYP:RIF , ((COOL:AIR + MOVOL:200V , FREQ:50HZ + MOVOL:400V , FREQ:60HZ + MOVOL:460V) + CAPPRM:MHLW , (COOL:AIR + MOVOL:230V , MOVOL:460V) + (MODEL:GA75VP_16 , MODEL:GA90VP_16) + CAPPRM:ASME + FREQ:60HZ) + OILTYP:RXD

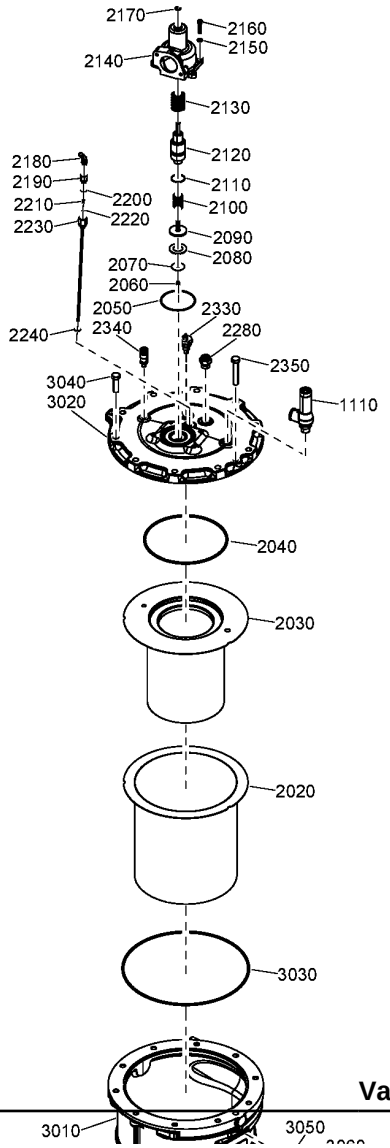

Ref	Part Number	Qty	Name	Validity
	• 1649 8003 01	1	OIL VESSEL	**(20/07/2017 - 20/08/2018)** ((MOVOL:200V , MOVOL:400V) + FREQ:50HZ , (MOVOL:200V , MOVOL:460V) + FREQ:60HZ) + CAPPRM:MHLW + COOL:AIR + OILTYP:RXD **(21/08/2018 - 30/12/2027)** (COOL:AIR + MOVOL:200V , FREQ:50HZ + MOVOL:400V , FREQ:60HZ + MOVOL:460V) + CAPPRM:MHLW + OILTYP:RXD **(31/12/2027 - ...)** ((MODEL:GA75VP_16 , MODEL:GA90VP_16) + COOL:AIR + MOVOL:200V , FREQ:50HZ + MOVOL:400V , FREQ:60HZ + MOVOL:460V) + CAPPRM:MHLW + OILTYP:RXD
	• 1649 8003 00			**(20/07/2017 - 04/12/2018)** CAPPRM:MOM + COOL:AIR + FREQ:50HZ + MOVOL:400V + OILTYP:RIF **(05/12/2018 - ...)** CAPPRM:MOM + FREQ:50HZ + MOVOL:400V + OILTYP:RIF
	• 1649 8002 98			**(09/03/2017 - 12/07/2017)** ((MODEL:GA110VP_16 + MOVOL:380V + OILTYP:RIF , MODEL:GA75VP_16 + MOVOL:460V + OILTYP:RXD) + CAPPRM:ASME + FREQ:60HZ , CAPPRM:CE + FREQ:50HZ + MOVOL:400V + OILTYP:RIF) + COOL:AIR **(13/07/2017 - 19/07/2017)** (((MOVOL:230V , MOVOL:460V) + MODEL:GA75VP_16 + OILTYP:RXD , (MOVOL:380V , MOVOL:460V) + MODEL:GA110VP_16 + OILTYP:RIF) + CAPPRM:ASME + FREQ:60HZ , (MOVOL:400V , MOVOL:500V) + CAPPRM:CE + FREQ:50HZ + OILTYP:RIF) + COOL:AIR **(20/07/2017 - 20/08/2018)** (((MODEL:GA75VP_16 , MODEL:GA90VP_16) + (MOVOL:230V , MOVOL:460V) + OILTYP:RXD , (MOVOL:380V , MOVOL:460V) + OILTYP:RIF) + CAPPRM:ASME + FREQ:60HZ , (MOVOL:400V , MOVOL:500V) + CAPPRM:CE + FREQ:50HZ + OILTYP:RIF) + COOL:AIR **(21/08/2018 - 04/12/2018)** ((MOVOL:380V , MOVOL:460V) + CAPPRM:ASME + FREQ:60HZ , (MOVOL:400V , MOVOL:500V) + CAPPRM:CE + FREQ:50HZ) + COOL:AIR + OILTYP:RIF , (COOL:AIR + MOVOL:230V , MOVOL:460V) + (MODEL:GA75VP_16 , MODEL:GA90VP_16) + CAPPRM:ASME + FREQ:60HZ + OILTYP:RXD **(05/12/2018 - ...)** ((COOL:AIR + MOVOL:230V , MOVOL:460V) + (MODEL:GA75VP_16 , MODEL:GA90VP_16) + OILTYP:RXD , (MOVOL:380V , MOVOL:460V) + OILTYP:RIF) + CAPPRM:ASME + FREQ:60HZ , (COOL:AIR + MOVOL:500V , MOVOL:400V) +

6.4 - Air receiver AS1210, CE, MOM - RIF Oil, MHLW - RXD Oil

(((CAPPRM:AS1210 , CAPPRM:CE , CAPPRM:MOM) + MOVOL:400V , CAPPRM:CE + COOL:AIR + MOVOL:500V) + FREQ:50HZ , (MOVOL:380V , MOVOL:460V) + CAPPRM:ASME + FREQ:60HZ) + OILTYP:RIF , ((COOL:AIR + MOVOL:200V , FREQ:50HZ + MOVOL:400V , FREQ:60HZ + MOVOL:460V) + CAPPRM:MHLW , (COOL:AIR + MOVOL:230V , MOVOL:460V) + (MODEL:GA75VP_16 , MODEL:GA90VP_16) + CAPPRM:ASME + FREQ:60HZ) + OILTYP:RXD

Ref	Part Number	Qty	Name	Validity
3020 ••	1649 8001 02	1	TOP COVER	**(09/03/2017 - 12/07/2017)** ((MODEL:GA110VP_16 + MOVOL:380V + OILTYP:RIF , MODEL:GA75VP_16 + MOVOL:460V + OILTYP:RXD) + CAPPRM:ASME + FREQ:60HZ , CAPPRM:CE + FREQ:50HZ + MOVOL:400V + OILTYP:RIF) + COOL:AIR **(13/07/2017 - 19/07/2017)** (((MOVOL:230V , MOVOL:460V) + MODEL:GA75VP_16 + OILTYP:RXD , (MOVOL:380V , MOVOL:460V) + MODEL:GA110VP_16 + OILTYP:RIF) + CAPPRM:ASME + FREQ:60HZ , (MOVOL:400V , MOVOL:500V) + CAPPRM:CE + FREQ:50HZ + OILTYP:RIF) + COOL:AIR **(20/07/2017 - 20/08/2018)** ((((CAPPRM:AS1210 , CAPPRM:CE , CAPPRM:MOM) + MOVOL:400V , CAPPRM:CE + MOVOL:500V) + FREQ:50HZ , (MOVOL:380V , MOVOL:460V) + CAPPRM:ASME + FREQ:60HZ) + OILTYP:RIF , (((FREQ:50HZ , FREQ:60HZ) + MOVOL:200V , FREQ:50HZ + MOVOL:400V , FREQ:60HZ + MOVOL:460V) + CAPPRM:MHLW , (MODEL:GA75VP_16 , MODEL:GA90VP_16) + (MOVOL:230V , MOVOL:460V) + CAPPRM:ASME + FREQ:60HZ) + OILTYP:RXD) + COOL:AIR **(21/08/2018 - 04/12/2018)** ((((CAPPRM:AS1210 , CAPPRM:CE , CAPPRM:MOM) + MOVOL:400V , CAPPRM:CE + MOVOL:500V) + FREQ:50HZ , (MOVOL:380V , MOVOL:460V) + CAPPRM:ASME + FREQ:60HZ) + OILTYP:RIF , CAPPRM:MHLW + MOVOL:200V + OILTYP:RXD) + COOL:AIR , (((COOL:AIR + MOVOL:230V , MOVOL:460V) + (MODEL:GA75VP_16 , MODEL:GA90VP_16) + CAPPRM:ASME , CAPPRM:MHLW + MOVOL:460V) + FREQ:60HZ , CAPPRM:MHLW + FREQ:50HZ + MOVOL:400V) + OILTYP:RXD **(05/12/2018 - 30/12/2027)** **(31/12/2027 - ...)** (((CAPPRM:AS1210 , CAPPRM:CE , CAPPRM:MOM) + MOVOL:400V , CAPPRM:CE + COOL:AIR + MOVOL:500V) + FREQ:50HZ , (MOVOL:380V , MOVOL:460V) + CAPPRM:ASME + FREQ:60HZ) + OILTYP:RIF , (((CAPPRM:ASME + FREQ:60HZ + MOVOL:230V , CAPPRM:MHLW + MOVOL:200V) + COOL:AIR , CAPPRM:ASME + FREQ:60HZ + MOVOL:460V) + (MODEL:GA75VP_16 , MODEL:GA90VP_16) , (FREQ:50HZ + MOVOL:400V , FREQ:60HZ + MOVOL:460V) + CAPPRM:MHLW) + OILTYP:RXD
3030 ••	0663 2105 07	1	O-RING	**(09/03/2017 - 12/07/2017)** ((MODEL:GA110VP_16 + MOVOL:380V + OILTYP:RIF , MODEL:GA75VP_16 + MOVOL:460V + OILTYP:RXD) + CAPPRM:ASME + FREQ:60HZ , CAPPRM:CE + FREQ:50HZ + MOVOL:400V + OILTYP:RIF) + COOL:AIR **(13/07/2017 - 19/07/2017)** (((MOVOL:230V , MOVOL:460V) + MODEL:GA75VP_16 + OILTYP:RXD , (MOVOL:380V , MOVOL:460V) + MODEL:GA110VP_16 + OILTYP:RIF) + CAPPRM:ASME + FREQ:60HZ , (MOVOL:400V , MOVOL:500V) + CAPPRM:CE + FREQ:50HZ + OILTYP:RIF) + COOL:AIR **(20/07/2017 - 20/08/2018)** ((((CAPPRM:AS1210 , CAPPRM:CE , CAPPRM:MOM) + MOVOL:400V , CAPPRM:CE + MOVOL:500V) + FREQ:50HZ , (MOVOL:380V , MOVOL:460V) + CAPPRM:ASME + FREQ:60HZ) + OILTYP:RIF , (((FREQ:50HZ , FREQ:60HZ) + MOVOL:200V , FREQ:50HZ + MOVOL:400V , FREQ:60HZ + MOVOL:460V) + CAPPRM:MHLW , (MODEL:GA75VP_16 , MODEL:GA90VP_16) + (MOVOL:230V , MOVOL:460V) + CAPPRM:ASME + FREQ:60HZ) + OILTYP:RXD) + COOL:AIR **(21/08/2018 - 04/12/2018)** ((((CAPPRM:AS1210 , CAPPRM:CE , CAPPRM:MOM) + MOVOL:400V , CAPPRM:CE + MOVOL:500V) + FREQ:50HZ , (MOVOL:380V , MOVOL:460V) + CAPPRM:ASME + FREQ:60HZ) + OILTYP:RIF , CAPPRM:MHLW + MOVOL:200V + OILTYP:RXD) + COOL:AIR , (((COOL:AIR + MOVOL:230V , MOVOL:460V) + (MODEL:GA75VP_16 , MODEL:GA90VP_16) + CAPPRM:ASME , CAPPRM:MHLW + MOVOL:460V) + FREQ:60HZ , CAPPRM:MHLW + FREQ:50HZ + MOVOL:400V) + OILTYP:RXD **(05/12/2018 - 30/12/2027)** **(31/12/2027 - ...)** (((CAPPRM:AS1210 , CAPPRM:CE , CAPPRM:MOM) + MOVOL:400V , CAPPRM:CE + COOL:AIR + MOVOL:500V) + FREQ:50HZ , (MOVOL:380V , MOVOL:460V) + CAPPRM:ASME + FREQ:60HZ) + OILTYP:RIF , (((CAPPRM:ASME + FREQ:60HZ + MOVOL:230V , CAPPRM:MHLW + MOVOL:200V) + COOL:AIR , CAPPRM:ASME + FREQ:60HZ + MOVOL:460V) + (MODEL:GA75VP_16 , MODEL:GA90VP_16) , (FREQ:50HZ + MOVOL:400V , FREQ:60HZ + MOVOL:460V) + CAPPRM:MHLW) + OILTYP:RXD

Legend:

CAPPRM:AS1210 - Component approval mechanical:AS1210
CAPPRM:ASME - Component approval mechanical:ASME
CAPPRM:CE - Component approval mechanical:CE
CAPPRM:MHLW - Component approval mechanical:MHLW
CAPPRM:MOM - Component approval mechanical:MOM
COOL:AIR - Cooling:Air cooled
COOL:WATER - Cooling:Water cooled
FREQ:50HZ - Frequency:50 Hz
FREQ:60HZ - Frequency:60 Hz
MODEL:GA110VP_16 - Model:GA 110VSD+
MODEL:GA75VP_16 - Model:GA 75VSD+
MODEL:GA90VP_16 - Model:GA 90VSD+
MOVOL:200V - Supply voltage:200 V
MOVOL:230V - Supply voltage:230 V
MOVOL:380V - Supply voltage:380 V
MOVOL:400V - Supply voltage:400 V
MOVOL:460V - Supply voltage:460 V
MOVOL:500V - Supply voltage:500 V
OILTYP:RIF - Oil type:Roto inject fluid oil
OILTYP:RXD - Oil type:Roto-Xtend Duty Fluid

(((CAPPRM:AS1210 , CAPPRM:CE , CAPPRM:MOM) + MOVOL:400V , CAPPRM:CE + COOL:AIR + MOVOL:500V) + FREQ:50HZ , (MOVOL:380V , MOVOL:460V) + CAPPRM:ASME + FREQ:60HZ) + OILTYP:RIF , ((COOL:AIR + MOVOL:200V , FREQ:50HZ + MOVOL:400V , FREQ:60HZ + MOVOL:460V) + CAPPRM:MHLW , (COOL:AIR + MOVOL:230V , MOVOL:460V) + (MODEL:GA75VP_16 , MODEL:GA90VP_16) + CAPPRM:ASME + FREQ:60HZ) + OILTYP:RXD

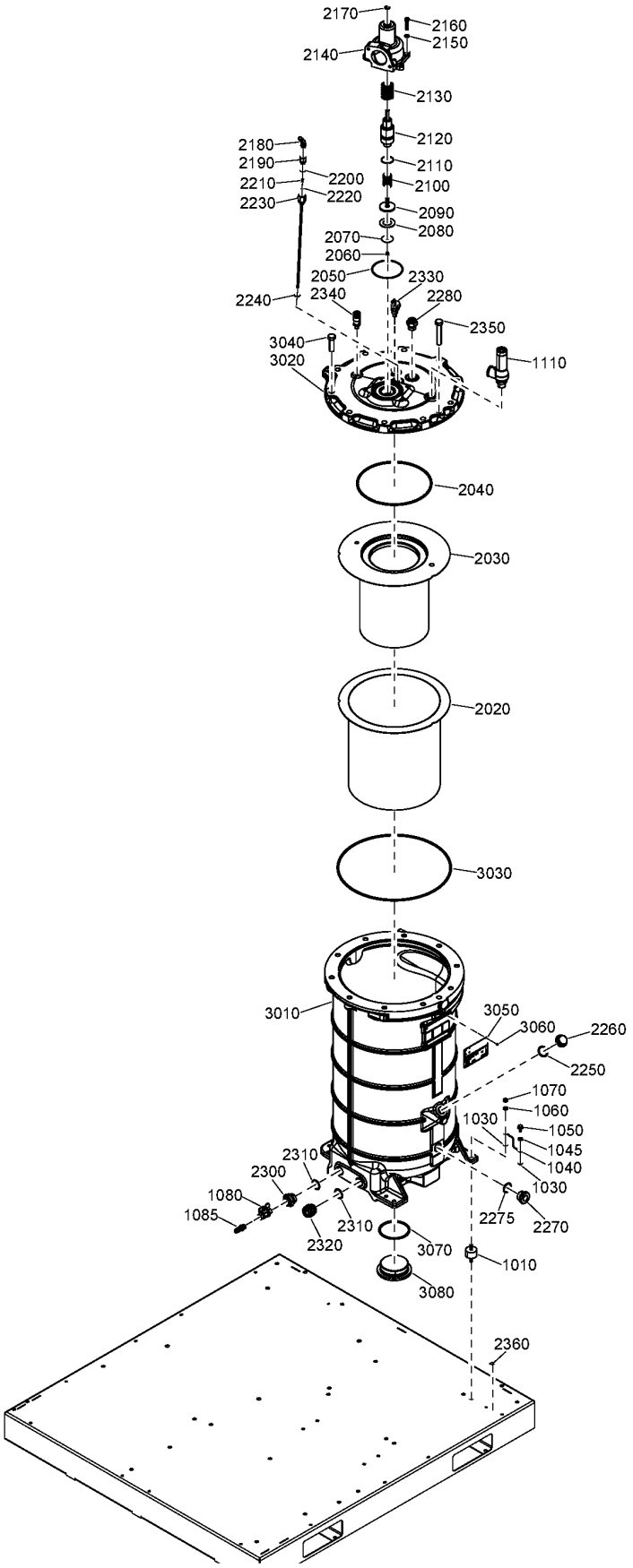

6.4 - Air receiver AS1210, CE, MOM - RIF Oil, MHLW - RXD Oil

(((CAPPRM:AS1210 , CAPPRM:CE , CAPPRM:MOM) + MOVOL:400V , CAPPRM:CE + COOL:AIR + MOVOL:500V) + FREQ:50HZ , (MOVOL:380V , MOVOL:460V) + CAPPRM:ASME + FREQ:60HZ) + OILTYP:RIF , ((COOL:AIR + MOVOL:200V , FREQ:50HZ + MOVOL:400V , FREQ:60HZ + MOVOL:460V) + CAPPRM:MHLW , (COOL:AIR + MOVOL:230V , MOVOL:460V) + (MODEL:GA75VP_16 , MODEL:GA90VP_16) + CAPPRM:ASME + FREQ:60HZ) + OILTYP:RXD

Ref	Part Number	Qty	Name	Validity
3040 ••	0147 1107 92	10	HEXAGON BOLT	**(09/03/2017 - 12/07/2017)** ((MODEL:GA110VP_16 + MOVOL:380V + OILTYP:RIF , MODEL:GA75VP_16 + MOVOL:460V + OILTYP:RXD) + CAPPRM:ASME + FREQ:60HZ , CAPPRM:CE + FREQ:50HZ + MOVOL:400V + OILTYP:RIF) + COOL:AIR **(13/07/2017 - 19/07/2017)** (((MOVOL:230V , MOVOL:460V) + MODEL:GA75VP_16 + OILTYP:RXD , (MOVOL:380V , MOVOL:460V) + MODEL:GA110VP_16 + OILTYP:RIF) + CAPPRM:ASME + FREQ:60HZ , (MOVOL:400V , MOVOL:500V) + CAPPRM:CE + FREQ:50HZ + OILTYP:RIF) + COOL:AIR **(20/07/2017 - 20/08/2018)** ((((CAPPRM:AS1210 , CAPPRM:CE , CAPPRM:MOM) + MOVOL:400V , CAPPRM:CE + MOVOL:500V) + FREQ:50HZ , (MOVOL:380V , MOVOL:460V) + CAPPRM:ASME + FREQ:60HZ) + OILTYP:RIF , (((FREQ:50HZ , FREQ:60HZ) + MOVOL:200V , FREQ:50HZ + MOVOL:400V , FREQ:60HZ + MOVOL:460V) + CAPPRM:MHLW , (MODEL:GA75VP_16 , MODEL:GA90VP_16) + (MOVOL:230V , MOVOL:460V) + CAPPRM:ASME + FREQ:60HZ) + OILTYP:RXD) + COOL:AIR **(21/08/2018 - 04/12/2018)** ((((CAPPRM:AS1210 , CAPPRM:CE , CAPPRM:MOM) + MOVOL:400V , CAPPRM:CE + MOVOL:500V) + FREQ:50HZ , (MOVOL:380V , MOVOL:460V) + CAPPRM:ASME + FREQ:60HZ) + OILTYP:RIF , CAPPRM:MHLW + MOVOL:200V + OILTYP:RXD) + COOL:AIR , (((COOL:AIR + MOVOL:230V , MOVOL:460V) + (MODEL:GA75VP_16 , MODEL:GA90VP_16) + CAPPRM:ASME , CAPPRM:MHLW + MOVOL:460V) + FREQ:60HZ , CAPPRM:MHLW + FREQ:50HZ + MOVOL:400V) + OILTYP:RXD **(05/12/2018 - 30/12/2027)** **(31/12/2027 - ...)** (((CAPPRM:AS1210 , CAPPRM:CE , CAPPRM:MOM) + MOVOL:400V , CAPPRM:CE + COOL:AIR + MOVOL:500V) + FREQ:50HZ , (MOVOL:380V , MOVOL:460V) + CAPPRM:ASME + FREQ:60HZ) + OILTYP:RIF , (((CAPPRM:ASME + FREQ:60HZ + MOVOL:230V , CAPPRM:MHLW + MOVOL:200V) + COOL:AIR , CAPPRM:ASME + FREQ:60HZ + MOVOL:460V) + (MODEL:GA75VP_16 , MODEL:GA90VP_16) , (FREQ:50HZ + MOVOL:400V , FREQ:60HZ + MOVOL:460V) + CAPPRM:MHLW) + OILTYP:RXD
3050 ••		1	DATA PLATE	**(20/07/2017 - 20/08/2018)** (((MOVOL:200V , MOVOL:400V) + FREQ:50HZ , (MOVOL:200V , MOVOL:460V) + FREQ:60HZ) + CAPPRM:MHLW + OILTYP:RXD , (CAPPRM:AS1210 , CAPPRM:MOM) + FREQ:50HZ + MOVOL:400V + OILTYP:RIF) + COOL:AIR **(21/08/2018 - 04/12/2018)** ((CAPPRM:AS1210 , CAPPRM:MOM) + COOL:AIR + OILTYP:RIF , CAPPRM:MHLW + OILTYP:RXD) + FREQ:50HZ + MOVOL:400V , (COOL:AIR + MOVOL:200V , FREQ:60HZ + MOVOL:460V) + CAPPRM:MHLW + OILTYP:RXD **(05/12/2018 - 30/12/2027)** ((CAPPRM:AS1210 , CAPPRM:MOM) + OILTYP:RIF , CAPPRM:MHLW + OILTYP:RXD) + FREQ:50HZ + MOVOL:400V , (COOL:AIR + MOVOL:200V , FREQ:60HZ + MOVOL:460V) + CAPPRM:MHLW + OILTYP:RXD **(31/12/2027 - ...)** ((MODEL:GA75VP_16 , MODEL:GA90VP_16) + COOL:AIR + MOVOL:200V , FREQ:50HZ + MOVOL:400V , FREQ:60HZ + MOVOL:460V) + CAPPRM:MHLW + OILTYP:RXD , (CAPPRM:AS1210 , CAPPRM:MOM) + FREQ:50HZ + MOVOL:400V + OILTYP:RIF

Legend:

CAPPRM:AS1210 - Component approval mechanical:AS1210
CAPPRM:ASME - Component approval mechanical:ASME
CAPPRM:CE - Component approval mechanical:CE
CAPPRM:MHLW - Component approval mechanical:MHLW
CAPPRM:MOM - Component approval mechanical:MOM
COOL:AIR - Cooling:Air cooled
COOL:WATER - Cooling:Water cooled
FREQ:50HZ - Frequency:50 Hz
FREQ:60HZ - Frequency:60 Hz
MODEL:GA110VP_16 - Model:GA 110VSD+
MODEL:GA75VP_16 - Model:GA 75VSD+
MODEL:GA90VP_16 - Model:GA 90VSD+
MOVOL:200V - Supply voltage:200 V
MOVOL:230V - Supply voltage:230 V
MOVOL:380V - Supply voltage:380 V
MOVOL:400V - Supply voltage:400 V
MOVOL:460V - Supply voltage:460 V
MOVOL:500V - Supply voltage:500 V
OILTYP:RIF - Oil type:Roto inject fluid oil
OILTYP:RXD - Oil type:Roto-Xtend Duty Fluid

6.4 - Air receiver AS1210, CE, MOM - RIF Oil, MHLW - RXD Oil

(((CAPPRM:AS1210 , CAPPRM:CE , CAPPRM:MOM) + MOVOL:400V , CAPPRM:CE + COOL:AIR + MOVOL:500V) + FREQ:50HZ , (MOVOL:380V , MOVOL:460V) + CAPPRM:ASME + FREQ:60HZ) + OILTYP:RIF , ((COOL:AIR + MOVOL:200V , FREQ:50HZ + MOVOL:400V , FREQ:60HZ + MOVOL:460V) + CAPPRM:MHLW , (COOL:AIR + MOVOL:230V , MOVOL:460V) + (MODEL:GA75VP_16 , MODEL:GA90VP_16) + CAPPRM:ASME + FREQ:60HZ) + OILTYP:RXD

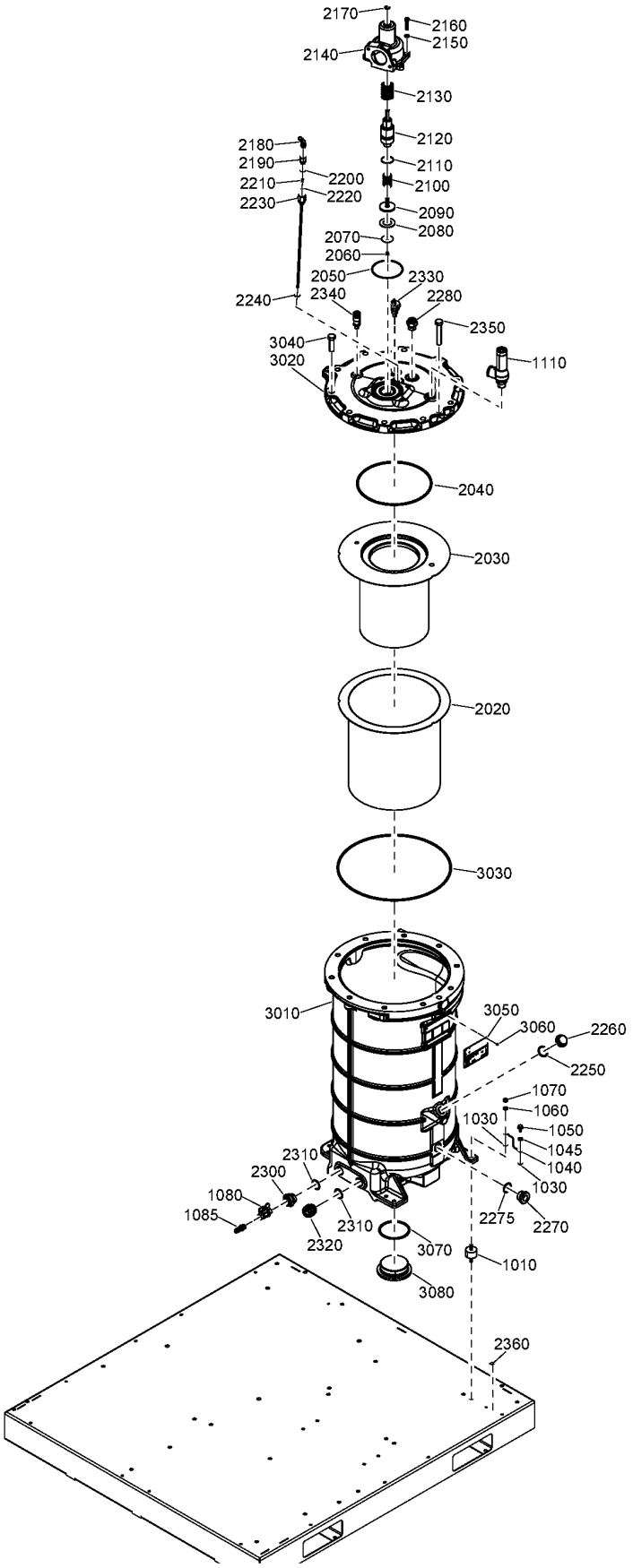

6.4 - Air receiver AS1210, CE, MOM - RIF Oil, MHLW - RXD Oil

(((CAPPRM:AS1210 , CAPPRM:CE , CAPPRM:MOM) + MOVOL:400V , CAPPRM:CE + COOL:AIR + MOVOL:500V) + FREQ:50HZ , (MOVOL:380V , MOVOL:460V) + CAPPRM:ASME + FREQ:60HZ) + OILTYP:RIF , ((COOL:AIR + MOVOL:200V , FREQ:50HZ + MOVOL:400V , FREQ:60HZ + MOVOL:460V) + CAPPRM:MHLW , (COOL:AIR + MOVOL:230V , MOVOL:460V) + (MODEL:GA75VP_16 , MODEL:GA90VP_16) + CAPPRM:ASME + FREQ:60HZ) + OILTYP:RXD

Ref	Part Number	Qty	Name	Validity
3050 ••		1	DATA PLATE	**(09/03/2017 - 12/07/2017)** ((MODEL:GA110VP_16 + MOVOL:380V + OILTYP:RIF , MODEL:GA75VP_16 + MOVOL:460V + OILTYP:RXD) + CAPPRM:ASME + FREQ:60HZ , CAPPRM:CE + FREQ:50HZ + MOVOL:400V + OILTYP:RIF) + COOL:AIR **(13/07/2017 - 19/07/2017)** (((MOVOL:230V , MOVOL:460V) + MODEL:GA75VP_16 + OILTYP:RXD , (MOVOL:380V , MOVOL:460V) + MODEL:GA110VP_16 + OILTYP:RIF) + CAPPRM:ASME + FREQ:60HZ , (MOVOL:400V , MOVOL:500V) + CAPPRM:CE + FREQ:50HZ + OILTYP:RIF) + COOL:AIR **(20/07/2017 - 20/08/2018)** (((MODEL:GA75VP_16 , MODEL:GA90VP_16) + (MOVOL:230V , MOVOL:460V) + OILTYP:RXD , (MOVOL:380V , MOVOL:460V) + OILTYP:RIF) + CAPPRM:ASME + FREQ:60HZ , (MOVOL:400V , MOVOL:500V) + CAPPRM:CE + FREQ:50HZ + OILTYP:RIF) + COOL:AIR **(21/08/2018 - 04/12/2018)** ((MOVOL:380V , MOVOL:460V) + CAPPRM:ASME + FREQ:60HZ , (MOVOL:400V , MOVOL:500V) + CAPPRM:CE + FREQ:50HZ) + COOL:AIR + OILTYP:RIF , (COOL:AIR + MOVOL:230V , MOVOL:460V) + (MODEL:GA75VP_16 , MODEL:GA90VP_16) + CAPPRM:ASME + FREQ:60HZ + OILTYP:RXD **(05/12/2018 - ...)** ((COOL:AIR + MOVOL:230V , MOVOL:460V) + (MODEL:GA75VP_16 , MODEL:GA90VP_16) + OILTYP:RXD , (MOVOL:380V , MOVOL:460V) + OILTYP:RIF) + CAPPRM:ASME + FREQ:60HZ , (COOL:AIR + MOVOL:500V , MOVOL:400V) + CAPPRM:CE + FREQ:50HZ + OILTYP:RIF
3060 ••	0244 4184 00	4	DRIVE SCREW	**(09/03/2017 - 12/07/2017)** ((MODEL:GA110VP_16 + MOVOL:380V + OILTYP:RIF , MODEL:GA75VP_16 + MOVOL:460V + OILTYP:RXD) + CAPPRM:ASME + FREQ:60HZ , CAPPRM:CE + FREQ:50HZ + MOVOL:400V + OILTYP:RIF) + COOL:AIR **(13/07/2017 - 19/07/2017)** (((MOVOL:230V , MOVOL:460V) + MODEL:GA75VP_16 + OILTYP:RXD , (MOVOL:380V , MOVOL:460V) + MODEL:GA110VP_16 + OILTYP:RIF) + CAPPRM:ASME + FREQ:60HZ , (MOVOL:400V , MOVOL:500V) + CAPPRM:CE + FREQ:50HZ + OILTYP:RIF) + COOL:AIR **(20/07/2017 - 20/08/2018)** ((((CAPPRM:AS1210 , CAPPRM:CE , CAPPRM:MOM) + MOVOL:400V , CAPPRM:CE + MOVOL:500V) + FREQ:50HZ , (MOVOL:380V , MOVOL:460V) + CAPPRM:ASME + FREQ:60HZ) + OILTYP:RIF , (((FREQ:50HZ , FREQ:60HZ) + MOVOL:200V , FREQ:50HZ + MOVOL:400V , FREQ:60HZ + MOVOL:460V) + CAPPRM:MHLW , (MODEL:GA75VP_16 , MODEL:GA90VP_16) + (MOVOL:230V , MOVOL:460V) + CAPPRM:ASME + FREQ:60HZ) + OILTYP:RXD) + COOL:AIR **(21/08/2018 - 04/12/2018)** ((((CAPPRM:AS1210 , CAPPRM:CE , CAPPRM:MOM) + MOVOL:400V , CAPPRM:CE + MOVOL:500V) + FREQ:50HZ , (MOVOL:380V , MOVOL:460V) + CAPPRM:ASME + FREQ:60HZ) + OILTYP:RIF , CAPPRM:MHLW + MOVOL:200V + OILTYP:RXD) + COOL:AIR , (((COOL:AIR + MOVOL:230V , MOVOL:460V) + (MODEL:GA75VP_16 , MODEL:GA90VP_16) + CAPPRM:ASME , CAPPRM:MHLW + MOVOL:460V) + FREQ:60HZ , CAPPRM:MHLW + FREQ:50HZ + MOVOL:400V) + OILTYP:RXD **(05/12/2018 - 30/12/2027)** **(31/12/2027 - ...)** (((CAPPRM:AS1210 , CAPPRM:CE , CAPPRM:MOM) + MOVOL:400V , CAPPRM:CE + COOL:AIR + MOVOL:500V) + FREQ:50HZ , (MOVOL:380V , MOVOL:460V) + CAPPRM:ASME + FREQ:60HZ) + OILTYP:RIF , (((CAPPRM:ASME + FREQ:60HZ + MOVOL:230V , CAPPRM:MHLW + MOVOL:200V) + COOL:AIR , CAPPRM:ASME + FREQ:60HZ + MOVOL:460V) + (MODEL:GA75VP_16 , MODEL:GA90VP_16) , (FREQ:50HZ + MOVOL:400V , FREQ:60HZ + MOVOL:460V) + CAPPRM:MHLW) + OILTYP:RXD

Legend:

CAPPRM:AS1210 - Component approval mechanical:AS1210
CAPPRM:ASME - Component approval mechanical:ASME
CAPPRM:CE - Component approval mechanical:CE
CAPPRM:MHLW - Component approval mechanical:MHLW
CAPPRM:MOM - Component approval mechanical:MOM
COOL:AIR - Cooling:Air cooled
COOL:WATER - Cooling:Water cooled
FREQ:50HZ - Frequency:50 Hz
FREQ:60HZ - Frequency:60 Hz
MODEL:GA110VP_16 - Model:GA 110VSD+
MODEL:GA75VP_16 - Model:GA 75VSD+
MODEL:GA90VP_16 - Model:GA 90VSD+
MOVOL:200V - Supply voltage:200 V
MOVOL:230V - Supply voltage:230 V
MOVOL:380V - Supply voltage:380 V
MOVOL:400V - Supply voltage:400 V
MOVOL:460V - Supply voltage:460 V
MOVOL:500V - Supply voltage:500 V
OILTYP:RIF - Oil type:Roto inject fluid oil
OILTYP:RXD - Oil type:Roto-Xtend Duty Fluid

6.4 - Air receiver AS1210, CE, MOM - RIF Oil, MHLW - RXD Oil

(((CAPPRM:AS1210 , CAPPRM:CE , CAPPRM:MOM) + MOVOL:400V , CAPPRM:CE + COOL:AIR + MOVOL:500V) + FREQ:50HZ , (MOVOL:380V , MOVOL:460V) + CAPPRM:ASME + FREQ:60HZ) + OILTYP:RIF , ((COOL:AIR + MOVOL:200V , FREQ:50HZ + MOVOL:400V , FREQ:60HZ + MOVOL:460V) + CAPPRM:MHLW , (COOL:AIR + MOVOL:230V , MOVOL:460V) + (MODEL:GA75VP_16 , MODEL:GA90VP_16) + CAPPRM:ASME + FREQ:60HZ) + OILTYP:RXD

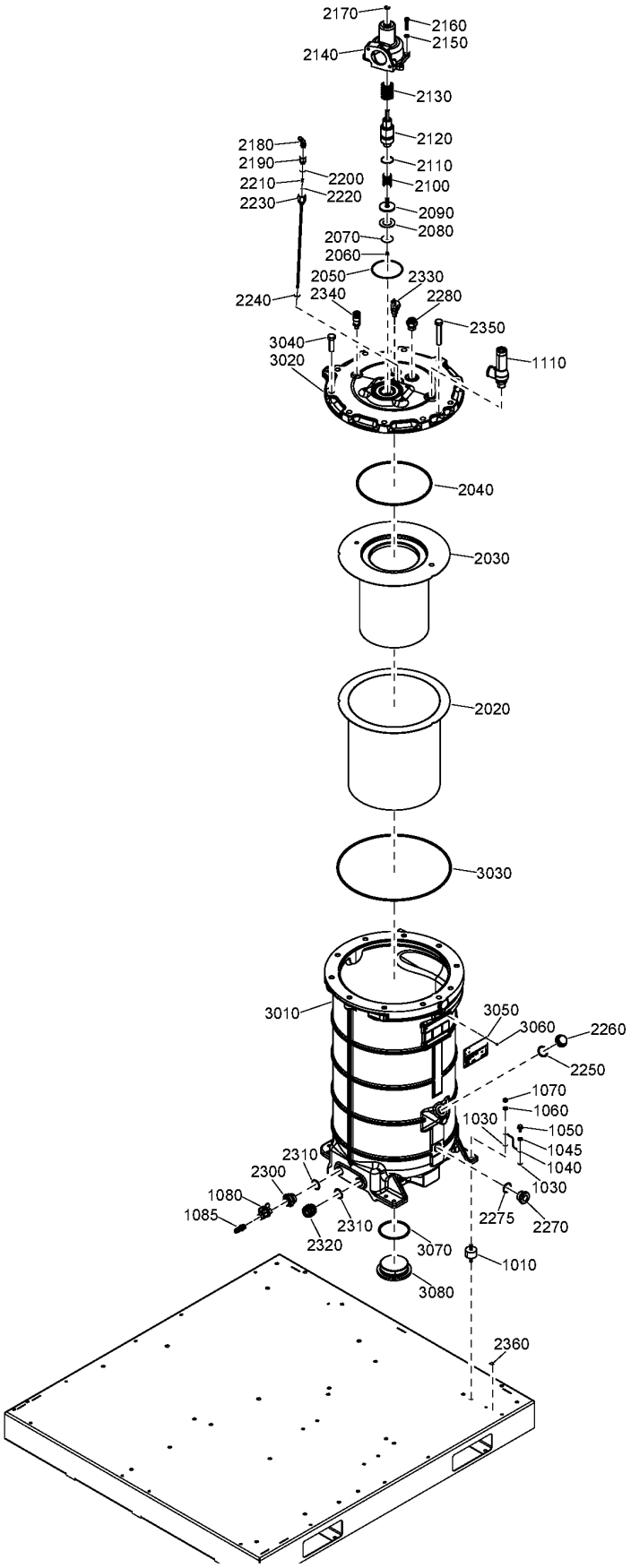

Ref	Part Number	Qty	Name	Validity
3070 ••	0663 2115 45	1	O-RING	**(09/03/2017 - 12/07/2017)** ((MODEL:GA110VP_16 + MOVOL:380V + OILTYP:RIF , MODEL:GA75VP_16 + MOVOL:460V + OILTYP:RXD) + CAPPRM:ASME + FREQ:60HZ , CAPPRM:CE + FREQ:50HZ + MOVOL:400V + OILTYP:RIF) + COOL:AIR **(13/07/2017 - 19/07/2017)** (((MOVOL:230V , MOVOL:460V) + MODEL:GA75VP_16 + OILTYP:RXD , (MOVOL:380V , MOVOL:460V) + MODEL:GA110VP_16 + OILTYP:RIF) + CAPPRM:ASME + FREQ:60HZ , (MOVOL:400V , MOVOL:500V) + CAPPRM:CE + FREQ:50HZ + OILTYP:RIF) + COOL:AIR **(20/07/2017 - 20/08/2018)** ((((CAPPRM:AS1210 , CAPPRM:CE , CAPPRM:MOM) + MOVOL:400V , CAPPRM:CE + MOVOL:500V) + FREQ:50HZ , (MOVOL:380V , MOVOL:460V) + CAPPRM:ASME + FREQ:60HZ) + OILTYP:RIF , (((FREQ:50HZ , FREQ:60HZ) + MOVOL:200V , FREQ:50HZ + MOVOL:400V , FREQ:60HZ + MOVOL:460V) + CAPPRM:MHLW , (MODEL:GA75VP_16 , MODEL:GA90VP_16) + (MOVOL:230V , MOVOL:460V) + CAPPRM:ASME + FREQ:60HZ) + OILTYP:RXD) + COOL:AIR **(21/08/2018 - 04/12/2018)** ((((CAPPRM:AS1210 , CAPPRM:CE , CAPPRM:MOM) + MOVOL:400V , CAPPRM:CE + MOVOL:500V) + FREQ:50HZ , (MOVOL:380V , MOVOL:460V) + CAPPRM:ASME + FREQ:60HZ) + OILTYP:RIF , CAPPRM:MHLW + MOVOL:200V + OILTYP:RXD) + COOL:AIR , (((COOL:AIR + MOVOL:230V , MOVOL:460V) + (MODEL:GA75VP_16 , MODEL:GA90VP_16) + CAPPRM:ASME , CAPPRM:MHLW + MOVOL:460V) + FREQ:60HZ , CAPPRM:MHLW + FREQ:50HZ + MOVOL:400V) + OILTYP:RXD **(05/12/2018 - 30/12/2027)** **(31/12/2027 - ...)** (((CAPPRM:AS1210 , CAPPRM:CE , CAPPRM:MOM) + MOVOL:400V , CAPPRM:CE + COOL:AIR + MOVOL:500V) + FREQ:50HZ , (MOVOL:380V , MOVOL:460V) + CAPPRM:ASME + FREQ:60HZ) + OILTYP:RIF , (((CAPPRM:ASME + FREQ:60HZ + MOVOL:230V , CAPPRM:MHLW + MOVOL:200V) + COOL:AIR , CAPPRM:ASME + FREQ:60HZ + MOVOL:460V) + (MODEL:GA75VP_16 , MODEL:GA90VP_16) , (FREQ:50HZ + MOVOL:400V , FREQ:60HZ + MOVOL:460V) + CAPPRM:MHLW) + OILTYP:RXD
3080 ••	1625 7620 00	1	PLUG	**(09/03/2017 - 12/07/2017)** ((MODEL:GA110VP_16 + MOVOL:380V + OILTYP:RIF , MODEL:GA75VP_16 + MOVOL:460V + OILTYP:RXD) + CAPPRM:ASME + FREQ:60HZ , CAPPRM:CE + FREQ:50HZ + MOVOL:400V + OILTYP:RIF) + COOL:AIR **(13/07/2017 - 19/07/2017)** (((MOVOL:230V , MOVOL:460V) + MODEL:GA75VP_16 + OILTYP:RXD , (MOVOL:380V , MOVOL:460V) + MODEL:GA110VP_16 + OILTYP:RIF) + CAPPRM:ASME + FREQ:60HZ , (MOVOL:400V , MOVOL:500V) + CAPPRM:CE + FREQ:50HZ + OILTYP:RIF) + COOL:AIR **(20/07/2017 - 20/08/2018)** ((((CAPPRM:AS1210 , CAPPRM:CE , CAPPRM:MOM) + MOVOL:400V , CAPPRM:CE + MOVOL:500V) + FREQ:50HZ , (MOVOL:380V , MOVOL:460V) + CAPPRM:ASME + FREQ:60HZ) + OILTYP:RIF , (((FREQ:50HZ , FREQ:60HZ) + MOVOL:200V , FREQ:50HZ + MOVOL:400V , FREQ:60HZ + MOVOL:460V) + CAPPRM:MHLW , (MODEL:GA75VP_16 , MODEL:GA90VP_16) + (MOVOL:230V , MOVOL:460V) + CAPPRM:ASME + FREQ:60HZ) + OILTYP:RXD) + COOL:AIR **(21/08/2018 - 04/12/2018)** ((((CAPPRM:AS1210 , CAPPRM:CE , CAPPRM:MOM) + MOVOL:400V , CAPPRM:CE + MOVOL:500V) + FREQ:50HZ , (MOVOL:380V , MOVOL:460V) + CAPPRM:ASME + FREQ:60HZ) + OILTYP:RIF , CAPPRM:MHLW + MOVOL:200V + OILTYP:RXD) + COOL:AIR , (((COOL:AIR + MOVOL:230V , MOVOL:460V) + (MODEL:GA75VP_16 , MODEL:GA90VP_16) + CAPPRM:ASME , CAPPRM:MHLW + MOVOL:460V) + FREQ:60HZ , CAPPRM:MHLW + FREQ:50HZ + MOVOL:400V) + OILTYP:RXD **(05/12/2018 - 30/12/2027)** **(31/12/2027 - ...)** (((CAPPRM:AS1210 , CAPPRM:CE , CAPPRM:MOM) + MOVOL:400V , CAPPRM:CE + COOL:AIR + MOVOL:500V) + FREQ:50HZ , (MOVOL:380V , MOVOL:460V) + CAPPRM:ASME + FREQ:60HZ) + OILTYP:RIF , (((CAPPRM:ASME + FREQ:60HZ + MOVOL:230V , CAPPRM:MHLW + MOVOL:200V) + COOL:AIR , CAPPRM:ASME + FREQ:60HZ + MOVOL:460V) + (MODEL:GA75VP_16 , MODEL:GA90VP_16) , (FREQ:50HZ + MOVOL:400V , FREQ:60HZ + MOVOL:460V) + CAPPRM:MHLW) + OILTYP:RXD

Legend:

CAPPRM:AS1210 - Component approval mechanical:AS1210
CAPPRM:ASME - Component approval mechanical:ASME
CAPPRM:CE - Component approval mechanical:CE
CAPPRM:MHLW - Component approval mechanical:MHLW
CAPPRM:MOM - Component approval mechanical:MOM
COOL:AIR - Cooling:Air cooled
COOL:WATER - Cooling:Water cooled
FREQ:50HZ - Frequency:50 Hz
FREQ:60HZ - Frequency:60 Hz
MODEL:GA110VP_16 - Model:GA 110VSD+
MODEL:GA75VP_16 - Model:GA 75VSD+
MODEL:GA90VP_16 - Model:GA 90VSD+
MOVOL:200V - Supply voltage:200 V
MOVOL:230V - Supply voltage:230 V
MOVOL:380V - Supply voltage:380 V
MOVOL:400V - Supply voltage:400 V
MOVOL:460V - Supply voltage:460 V
MOVOL:500V - Supply voltage:500 V
OILTYP:RIF - Oil type:Roto inject fluid oil
OILTYP:RXD - Oil type:Roto-Xtend Duty Fluid

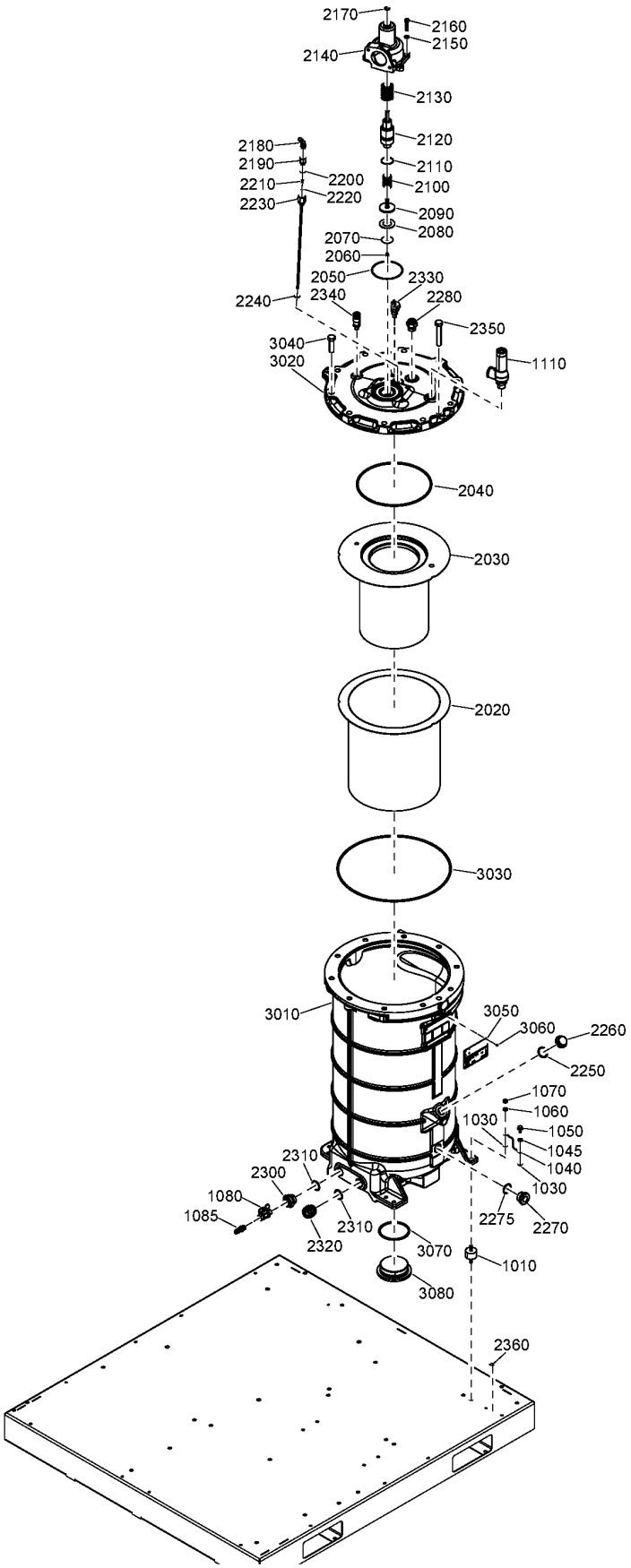
2170
2160
2150
2140
2130
2120
2180
2190
2110
2200
2210
2100
2220
2230
2090
2080
2070
2060
2050
2330
2340
2280
2240
2350
3040
3020
1110
2040
2030
2020
3030
3010
3050
3060
2260
2250
1070
1060
1030
1050
1045
1040
2310
2300
1030
1080
1085
2310
2275
2270
2320
3070
1010
3080
2360

Ref	Part Number	Qty	Name	Validity
1010	1649 8002 87	4	BUFFER	**(09/03/2017 - 12/07/2017)** COOL:AIR + MODEL:GA110VP_16 + MOVOL:575V **(13/07/2017 - 19/07/2017)** (MOVOL:230V , MOVOL:460V , MOVOL:575V) + COOL:AIR + MODEL:GA110VP_16 **(20/07/2017 - 20/08/2018)** ((MODEL:GA110VP_16 , MODEL:GA75VP_16 , MODEL:GA90VP_16) + MOVOL:575V , (MOVOL:230V , MOVOL:460V) + MODEL:GA110VP_16) + COOL:AIR **(21/08/2018 - 30/12/2027)** ((MODEL:GA110VP_16 , MODEL:GA75VP_16 , MODEL:GA90VP_16) + MOVOL:575V , (MOVOL:230V , MOVOL:460V) + MODEL:GA110VP_16) + COOL:AIR , COOL:WATER + MODEL:GA110VP_16 + MOVOL:460V **(31/12/2027 - ...)**
1030	0333 3227 00	2	WASHER	**(09/03/2017 - 12/07/2017)** COOL:AIR + MODEL:GA110VP_16 + MOVOL:575V **(13/07/2017 - 19/07/2017)** (MOVOL:230V , MOVOL:460V , MOVOL:575V) + COOL:AIR + MODEL:GA110VP_16 **(20/07/2017 - 20/08/2018)** ((MODEL:GA110VP_16 , MODEL:GA75VP_16 , MODEL:GA90VP_16) + MOVOL:575V , (MOVOL:230V , MOVOL:460V) + MODEL:GA110VP_16) + COOL:AIR **(21/08/2018 - 30/12/2027)** ((MODEL:GA110VP_16 , MODEL:GA75VP_16 , MODEL:GA90VP_16) + MOVOL:575V , (MOVOL:230V , MOVOL:460V) + MODEL:GA110VP_16) + COOL:AIR , COOL:WATER + MODEL:GA110VP_16 + MOVOL:460V **(31/12/2027 - ...)**
1040	1613 8967 12	1	GROUNDING WIRE	**(09/03/2017 - 12/07/2017)** COOL:AIR + MODEL:GA110VP_16 + MOVOL:575V **(13/07/2017 - 19/07/2017)** (MOVOL:230V , MOVOL:460V , MOVOL:575V) + COOL:AIR + MODEL:GA110VP_16 **(20/07/2017 - 20/08/2018)** ((MODEL:GA110VP_16 , MODEL:GA75VP_16 , MODEL:GA90VP_16) + MOVOL:575V , (MOVOL:230V , MOVOL:460V) + MODEL:GA110VP_16) + COOL:AIR **(21/08/2018 - 30/12/2027)** ((MODEL:GA110VP_16 , MODEL:GA75VP_16 , MODEL:GA90VP_16) + MOVOL:575V , (MOVOL:230V , MOVOL:460V) + MODEL:GA110VP_16) + COOL:AIR , COOL:WATER + MODEL:GA110VP_16 + MOVOL:460V **(31/12/2027 - ...)**
1045	0301 2335 00	1	WASHER	**(05/05/2017 - 12/07/2017)** COOL:AIR + MODEL:GA110VP_16 + MOVOL:575V **(13/07/2017 - 19/07/2017)** (MOVOL:230V , MOVOL:460V , MOVOL:575V) + COOL:AIR + MODEL:GA110VP_16 **(20/07/2017 - 20/08/2018)** ((MODEL:GA110VP_16 , MODEL:GA75VP_16 , MODEL:GA90VP_16) + MOVOL:575V , (MOVOL:230V , MOVOL:460V) + MODEL:GA110VP_16) + COOL:AIR **(21/08/2018 - 30/12/2027)** ((MODEL:GA110VP_16 , MODEL:GA75VP_16 , MODEL:GA90VP_16) + MOVOL:575V , (MOVOL:230V , MOVOL:460V) + MODEL:GA110VP_16) + COOL:AIR , COOL:WATER + MODEL:GA110VP_16 + MOVOL:460V **(31/12/2027 - ...)**
1050	0226 0301 00	1	TAPPING SCREW	**(09/03/2017 - 12/07/2017)** COOL:AIR + MODEL:GA110VP_16 + MOVOL:575V **(13/07/2017 - 19/07/2017)** (MOVOL:230V , MOVOL:460V , MOVOL:575V) + COOL:AIR + MODEL:GA110VP_16 **(20/07/2017 - 20/08/2018)** ((MODEL:GA110VP_16 , MODEL:GA75VP_16 , MODEL:GA90VP_16) + MOVOL:575V , (MOVOL:230V , MOVOL:460V) + MODEL:GA110VP_16) + COOL:AIR **(21/08/2018 - 30/12/2027)** ((MODEL:GA110VP_16 , MODEL:GA75VP_16 , MODEL:GA90VP_16) + MOVOL:575V , (MOVOL:230V , MOVOL:460V) + MODEL:GA110VP_16) + COOL:AIR , COOL:WATER + MODEL:GA110VP_16 + MOVOL:460V **(31/12/2027 - ...)**
1060	0301 2335 00	4	WASHER	**(09/03/2017 - 12/07/2017)** COOL:AIR + MODEL:GA110VP_16 + MOVOL:575V **(13/07/2017 - 19/07/2017)** (MOVOL:230V , MOVOL:460V , MOVOL:575V) + COOL:AIR + MODEL:GA110VP_16 **(20/07/2017 - 20/08/2018)** ((MODEL:GA110VP_16 , MODEL:GA75VP_16 , MODEL:GA90VP_16) + MOVOL:575V , (MOVOL:230V , MOVOL:460V) + MODEL:GA110VP_16) + COOL:AIR **(21/08/2018 - 30/12/2027)** ((MODEL:GA110VP_16 , MODEL:GA75VP_16 , MODEL:GA90VP_16) + MOVOL:575V , (MOVOL:230V , MOVOL:460V) + MODEL:GA110VP_16) + COOL:AIR , COOL:WATER + MODEL:GA110VP_16 + MOVOL:460V **(31/12/2027 - ...)**

Legend:

CAPPRM:ASME - Component approval mechanical:ASME
FREQ:60HZ - Frequency:60 Hz
MODEL:GA90VP_16 - Model:GA 90VSD+
MOVOL:575V - Supply voltage:575 V
COOL:AIR - Cooling:Air cooled
MODEL:GA110VP_16 - Model:GA 110VSD+
MOVOL:230V - Supply voltage:230 V
OILTYP:RXD - Oil type:Roto-Xtend Duty Fluid
COOL:WATER - Cooling:Water cooled
MODEL:GA75VP_16 - Model:GA 75VSD+
MOVOL:460V - Supply voltage:460 V

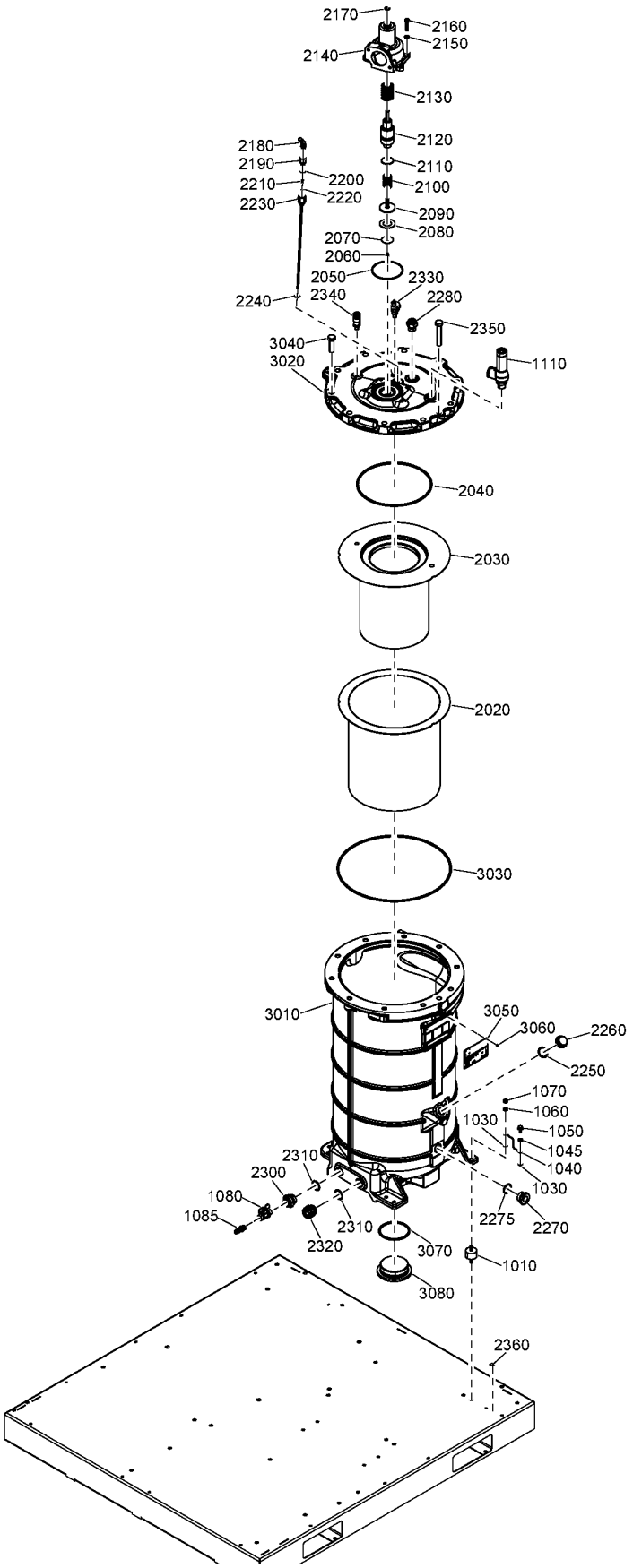
2170
2160
2150
2140
2130
2120
2180
2190
2110
2200
2210
2100
2220
2230
2090
2080
2070
2060
2050
2330
2340
2280
2240
2350
3040
3020
1110
2040
2030
2020
3030
3010
3050
3060
2260
2250
1070
1060
1030
1050
1045
1040
2310
2300
1030
1080
1085
2310
2275
2270
2320
3070
1010
3080
2360

Ref	Part Number	Qty	Name	Validity
1070	0266 2110 00	4	NUT	**(09/03/2017 - 12/07/2017)** COOL:AIR + MODEL:GA110VP_16 + MOVOL:575V **(13/07/2017 - 19/07/2017)** (MOVOL:230V , MOVOL:460V , MOVOL:575V) + COOL:AIR + MODEL:GA110VP_16 **(20/07/2017 - 20/08/2018)** ((MODEL:GA110VP_16 , MODEL:GA75VP_16 , MODEL:GA90VP_16) + MOVOL:575V , (MOVOL:230V , MOVOL:460V) + MODEL:GA110VP_16) + COOL:AIR **(21/08/2018 - 30/12/2027)** ((MODEL:GA110VP_16 , MODEL:GA75VP_16 , MODEL:GA90VP_16) + MOVOL:575V , (MOVOL:230V , MOVOL:460V) + MODEL:GA110VP_16) + COOL:AIR , COOL:WATER + MODEL:GA110VP_16 + MOVOL:460V **(31/12/2027 - ...)**
1080	0852 0011 51	1	BALL VALVE	**(09/03/2017 - 12/07/2017)** COOL:AIR + MODEL:GA110VP_16 + MOVOL:575V **(13/07/2017 - 19/07/2017)** (MOVOL:230V , MOVOL:460V , MOVOL:575V) + COOL:AIR + MODEL:GA110VP_16 **(20/07/2017 - 20/08/2018)** ((MODEL:GA110VP_16 , MODEL:GA75VP_16 , MODEL:GA90VP_16) + MOVOL:575V , (MOVOL:230V , MOVOL:460V) + MODEL:GA110VP_16) + COOL:AIR **(21/08/2018 - 30/12/2027)** ((MODEL:GA110VP_16 , MODEL:GA75VP_16 , MODEL:GA90VP_16) + MOVOL:575V , (MOVOL:230V , MOVOL:460V) + MODEL:GA110VP_16) + COOL:AIR , COOL:WATER + MODEL:GA110VP_16 + MOVOL:460V **(31/12/2027 - ...)**
1085	8202 1251 78	1	QUICK COUPLING	**(02/02/2017 - 12/07/2017)** COOL:AIR + MODEL:GA110VP_16 + MOVOL:575V **(13/07/2017 - 20/08/2018)** ((MODEL:GA110VP_16 , MODEL:GA75VP_16 , MODEL:GA90VP_16) + MOVOL:575V , (MOVOL:230V , MOVOL:460V) + MODEL:GA110VP_16) + COOL:AIR **(21/08/2018 - 30/12/2027)** ((MODEL:GA110VP_16 , MODEL:GA75VP_16 , MODEL:GA90VP_16) + MOVOL:575V , (MOVOL:230V , MOVOL:460V) + MODEL:GA110VP_16) + COOL:AIR , COOL:WATER + MODEL:GA110VP_16 + MOVOL:460V **(31/12/2027 - ...)**
1110	1649 8003 90	1	SAFETY VALVE	**(30/10/2017 - 20/08/2018)** ((MODEL:GA110VP_16 , MODEL:GA75VP_16 , MODEL:GA90VP_16) + MOVOL:575V , (MOVOL:230V , MOVOL:460V) + MODEL:GA110VP_16) + COOL:AIR **(21/08/2018 - 30/12/2027)** ((MODEL:GA110VP_16 , MODEL:GA75VP_16 , MODEL:GA90VP_16) + MOVOL:575V , (MOVOL:230V , MOVOL:460V) + MODEL:GA110VP_16) + COOL:AIR , COOL:WATER + MODEL:GA110VP_16 + MOVOL:460V **(31/12/2027 - ...)**
	1649 8002 92	1	VESSEL ASSEMBLY	**(06/07/2017 - 19/07/2017)** COOL:AIR + MODEL:GA110VP_16 + MOVOL:575V **(20/07/2017 - 16/01/2018)** COOL:AIR + MOVOL:575V **(16/05/2019 - ...)** COOL:AIR + MOVOL:575V
	1649 8002 88			**(09/03/2017 - 05/07/2017)** COOL:AIR + MODEL:GA110VP_16 + MOVOL:575V **(06/07/2017 - 12/07/2017)** **(13/07/2017 - 16/01/2018)** (MOVOL:230V , MOVOL:460V) + COOL:AIR + MODEL:GA110VP_16 **(17/01/2018 - 20/08/2018)** ((MODEL:GA110VP_16 , MODEL:GA75VP_16 , MODEL:GA90VP_16) + MOVOL:575V , (MOVOL:230V , MOVOL:460V) + MODEL:GA110VP_16) + COOL:AIR **(21/08/2018 - 15/05/2019)** ((MODEL:GA110VP_16 , MODEL:GA75VP_16 , MODEL:GA90VP_16) + MOVOL:575V , (MOVOL:230V , MOVOL:460V) + MODEL:GA110VP_16) + COOL:AIR , COOL:WATER + MODEL:GA110VP_16 + MOVOL:460V **(16/05/2019 - 30/12/2027)** (COOL:AIR + MOVOL:230V , MOVOL:460V) + MODEL:GA110VP_16 **(31/12/2027 - ...)** MODEL:GA110VP_16 + MOVOL:460V
2020	• ~~1649 8001 03~~	1	SHIELD ASSEMBLY	**(09/03/2017 - 12/07/2017)** COOL:AIR + MODEL:GA110VP_16 + MOVOL:575V **(13/07/2017 - 19/07/2017)** (MOVOL:230V , MOVOL:460V , MOVOL:575V) + COOL:AIR + MODEL:GA110VP_16 **(20/07/2017 - 20/08/2018)** ((MODEL:GA110VP_16 , MODEL:GA75VP_16 , MODEL:GA90VP_16) + MOVOL:575V , (MOVOL:230V , MOVOL:460V) + MODEL:GA110VP_16) + COOL:AIR **(21/08/2018 - 15/05/2019)** ((MODEL:GA110VP_16 , MODEL:GA75VP_16 , MODEL:GA90VP_16) + MOVOL:575V , (MOVOL:230V , MOVOL:460V) + MODEL:GA110VP_16) + COOL:AIR , COOL:WATER + MODEL:GA110VP_16 + MOVOL:460V **(16/05/2019 - 30/12/2027)** (COOL:AIR + MOVOL:230V , MOVOL:460V) + MODEL:GA110VP_16 **(31/12/2027 - ...)** MODEL:GA110VP_16 + MOVOL:460V

Legend:

CAPPRM:ASME - Component approval mechanical:ASME
FREQ:60HZ - Frequency:60 Hz
MODEL:GA90VP_16 - Model:GA 90VSD+
MOVOL:575V - Supply voltage:575 V
COOL:AIR - Cooling:Air cooled
MODEL:GA110VP_16 - Model:GA 110VSD+
MOVOL:230V - Supply voltage:230 V
OILTYP:RXD - Oil type:Roto-Xtend Duty Fluid
COOL:WATER - Cooling:Water cooled
MODEL:GA75VP_16 - Model:GA 75VSD+
MOVOL:460V - Supply voltage:460 V

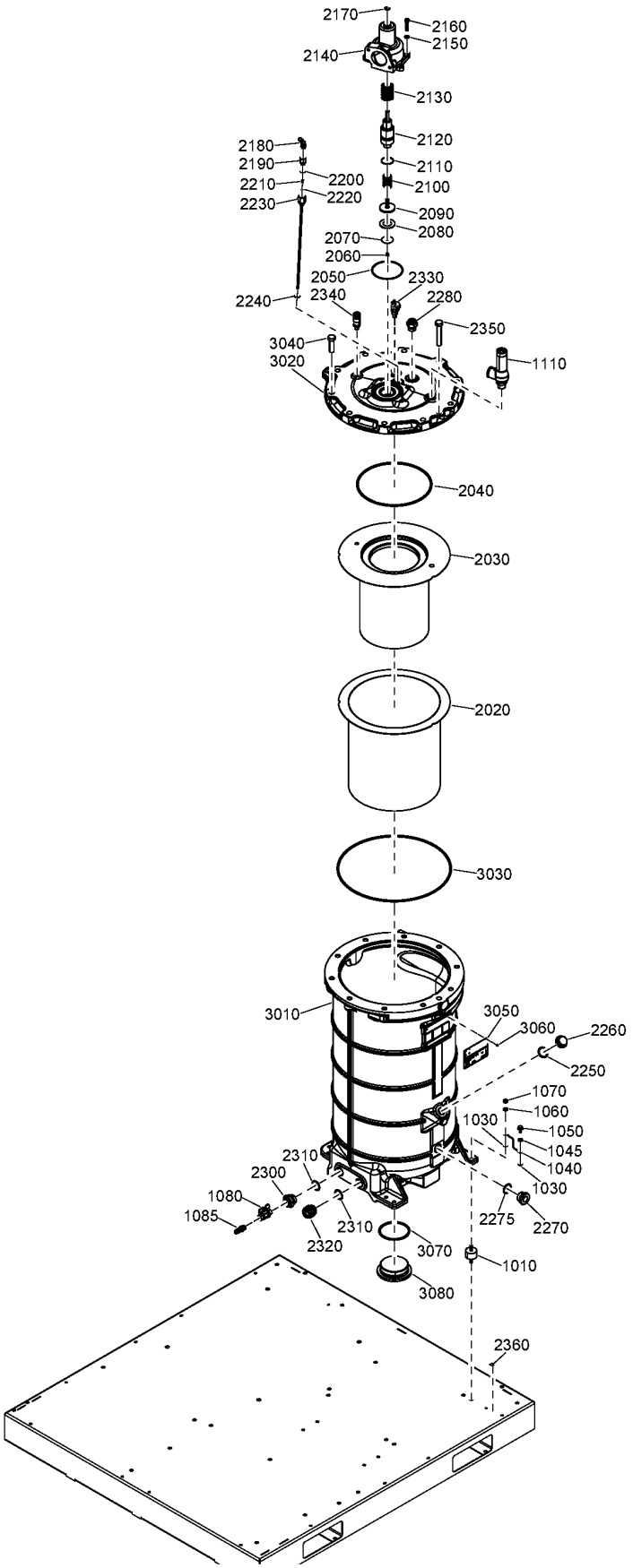
2170
2160
2150
2140
2130
2120
2180
2190
2110
2200
2210
2100
2220
2230
2090
2080
2070
2060
2050
2330
2340
2280
2240
2350
3040
3020
1110
2040
2030
2020
3030
3010
3050
3060
2260
2250
1070
1060
1030
1050
1045
1040
2310
2300
1030
1080
1085
2275
2270
2310
2320
3070
1010
3080
2360

Ref	Part Number	Qty	Name	Validity
	Substituted by:	1092 2040 98 - GA75-110VSD+ VESSEL SHIELD (quantity: 1)		
2030	• ~~1649 8001 41~~	1	OIL SEPARATOR	**(09/03/2017 - 12/07/2017)** COOL:AIR + MODEL:GA110VP_16 + MOVOL:575V **(13/07/2017 - 19/07/2017)** (MOVOL:230V , MOVOL:460V , MOVOL:575V) + COOL:AIR + MODEL:GA110VP_16 **(20/07/2017 - 20/08/2018)** ((MODEL:GA110VP_16 , MODEL:GA75VP_16 , MODEL:GA90VP_16) + MOVOL:575V , (MOVOL:230V , MOVOL:460V) + MODEL:GA110VP_16) + COOL:AIR **(21/08/2018 - 15/05/2019)** ((MODEL:GA110VP_16 , MODEL:GA75VP_16 , MODEL:GA90VP_16) + MOVOL:575V , (MOVOL:230V , MOVOL:460V) + MODEL:GA110VP_16) + COOL:AIR , COOL:WATER + MODEL:GA110VP_16 + MOVOL:460V **(16/05/2019 - 30/12/2027)** (COOL:AIR + MOVOL:230V , MOVOL:460V) + MODEL:GA110VP_16 **(31/12/2027 - ...)** MODEL:GA110VP_16 + MOVOL:460V
	Substituted by:	1630 1708 01 - SEPARATOR ELEMENT (quantity: 1)		
2040	• 0663 7170 00	1	O-RING	**(09/03/2017 - 12/07/2017)** COOL:AIR + MODEL:GA110VP_16 + MOVOL:575V **(13/07/2017 - 19/07/2017)** (MOVOL:230V , MOVOL:460V , MOVOL:575V) + COOL:AIR + MODEL:GA110VP_16 **(20/07/2017 - 20/08/2018)** ((MODEL:GA110VP_16 , MODEL:GA75VP_16 , MODEL:GA90VP_16) + MOVOL:575V , (MOVOL:230V , MOVOL:460V) + MODEL:GA110VP_16) + COOL:AIR **(21/08/2018 - 15/05/2019)** ((MODEL:GA110VP_16 , MODEL:GA75VP_16 , MODEL:GA90VP_16) + MOVOL:575V , (MOVOL:230V , MOVOL:460V) + MODEL:GA110VP_16) + COOL:AIR , COOL:WATER + MODEL:GA110VP_16 + MOVOL:460V **(16/05/2019 - 30/12/2027)** (COOL:AIR + MOVOL:230V , MOVOL:460V) + MODEL:GA110VP_16 **(31/12/2027 - ...)** MODEL:GA110VP_16 + MOVOL:460V
2050	• 0663 2116 70	1	O-RING	**(09/03/2017 - 12/07/2017)** COOL:AIR + MODEL:GA110VP_16 + MOVOL:575V **(13/07/2017 - 19/07/2017)** (MOVOL:230V , MOVOL:460V , MOVOL:575V) + COOL:AIR + MODEL:GA110VP_16 **(20/07/2017 - 20/08/2018)** ((MODEL:GA110VP_16 , MODEL:GA75VP_16 , MODEL:GA90VP_16) + MOVOL:575V , (MOVOL:230V , MOVOL:460V) + MODEL:GA110VP_16) + COOL:AIR **(21/08/2018 - 15/05/2019)** ((MODEL:GA110VP_16 , MODEL:GA75VP_16 , MODEL:GA90VP_16) + MOVOL:575V , (MOVOL:230V , MOVOL:460V) + MODEL:GA110VP_16) + COOL:AIR , COOL:WATER + MODEL:GA110VP_16 + MOVOL:460V **(16/05/2019 - 30/12/2027)** (COOL:AIR + MOVOL:230V , MOVOL:460V) + MODEL:GA110VP_16 **(31/12/2027 - ...)** MODEL:GA110VP_16 + MOVOL:460V
2060	• 0147 1244 03	1	HEXAGON BOLT	**(09/03/2017 - 12/07/2017)** COOL:AIR + MODEL:GA110VP_16 + MOVOL:575V **(13/07/2017 - 19/07/2017)** (MOVOL:230V , MOVOL:460V , MOVOL:575V) + COOL:AIR + MODEL:GA110VP_16 **(20/07/2017 - 20/08/2018)** ((MODEL:GA110VP_16 , MODEL:GA75VP_16 , MODEL:GA90VP_16) + MOVOL:575V , (MOVOL:230V , MOVOL:460V) + MODEL:GA110VP_16) + COOL:AIR **(21/08/2018 - 15/05/2019)** ((MODEL:GA110VP_16 , MODEL:GA75VP_16 , MODEL:GA90VP_16) + MOVOL:575V , (MOVOL:230V , MOVOL:460V) + MODEL:GA110VP_16) + COOL:AIR , COOL:WATER + MODEL:GA110VP_16 + MOVOL:460V **(16/05/2019 - 30/12/2027)** (COOL:AIR + MOVOL:230V , MOVOL:460V) + MODEL:GA110VP_16 **(31/12/2027 - ...)** MODEL:GA110VP_16 + MOVOL:460V
2070	• 1613 3222 00	1	WASHER	**(09/03/2017 - 12/07/2017)** COOL:AIR + MODEL:GA110VP_16 + MOVOL:575V **(13/07/2017 - 19/07/2017)** (MOVOL:230V , MOVOL:460V , MOVOL:575V) + COOL:AIR + MODEL:GA110VP_16 **(20/07/2017 - 20/08/2018)** ((MODEL:GA110VP_16 , MODEL:GA75VP_16 , MODEL:GA90VP_16) + MOVOL:575V , (MOVOL:230V , MOVOL:460V) + MODEL:GA110VP_16) + COOL:AIR **(21/08/2018 - 15/05/2019)** ((MODEL:GA110VP_16 , MODEL:GA75VP_16 , MODEL:GA90VP_16) + MOVOL:575V , (MOVOL:230V , MOVOL:460V) + MODEL:GA110VP_16) + COOL:AIR , COOL:WATER + MODEL:GA110VP_16 + MOVOL:460V **(16/05/2019 - 30/12/2027)** (COOL:AIR + MOVOL:230V , MOVOL:460V) + MODEL:GA110VP_16 **(31/12/2027 - ...)** MODEL:GA110VP_16 + MOVOL:460V

Legend:

CAPPRM:ASME - Component approval mechanical:ASME
FREQ:60HZ - Frequency:60 Hz
MODEL:GA90VP_16 - Model:GA 90VSD+
MOVOL:575V - Supply voltage:575 V
COOL:AIR - Cooling:Air cooled
MODEL:GA110VP_16 - Model:GA 110VSD+
MOVOL:230V - Supply voltage:230 V
OILTYP:RXD - Oil type:Roto-Xtend Duty Fluid
COOL:WATER - Cooling:Water cooled
MODEL:GA75VP_16 - Model:GA 75VSD+
MOVOL:460V - Supply voltage:460 V

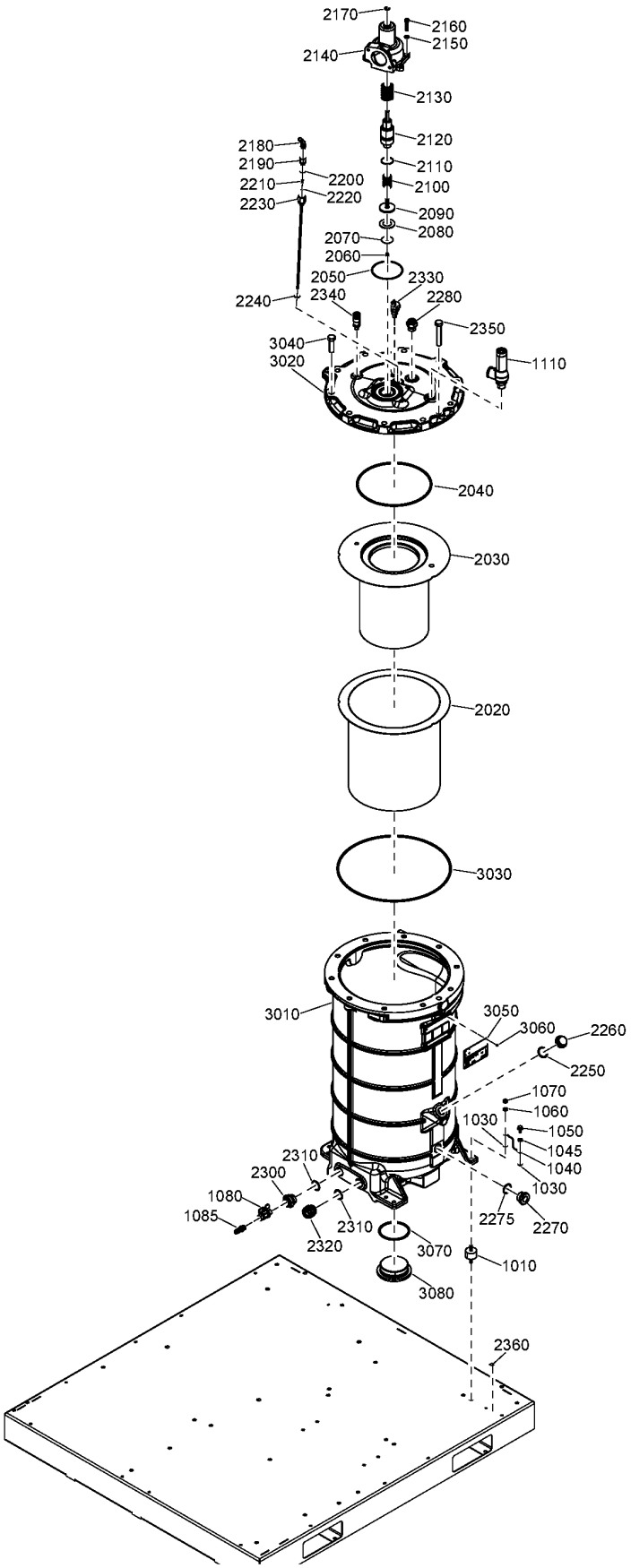
2170
2160
2150
2140
2130
2120
2180
2190
2110
2200
2210
2100
2220
2230
2090
2080
2070
2060
2050
2330
2340
2280
2240
2350
3040
3020
1110
2040
2030
2020
3030
3010
3050
3060
2260
2250
1070
1060
1030
1050
1045
1040
2310
2300
1030
1080
1085
2275
2270
2310
2320
3070
1010
3080
2360

Ref	Part Number	Qty	Name	Validity
2080	• 1613 3223 01	1	WASHER	**(09/03/2017 - 12/07/2017)** COOL:AIR + MODEL:GA110VP_16 + MOVOL:575V **(13/07/2017 - 19/07/2017)** (MOVOL:230V , MOVOL:460V , MOVOL:575V) + COOL:AIR + MODEL:GA110VP_16 **(20/07/2017 - 20/08/2018)** ((MODEL:GA110VP_16 , MODEL:GA75VP_16 , MODEL:GA90VP_16) + MOVOL:575V , (MOVOL:230V , MOVOL:460V) + MODEL:GA110VP_16) + COOL:AIR **(21/08/2018 - 15/05/2019)** ((MODEL:GA110VP_16 , MODEL:GA75VP_16 , MODEL:GA90VP_16) + MOVOL:575V , (MOVOL:230V , MOVOL:460V) + MODEL:GA110VP_16) + COOL:AIR , COOL:WATER + MODEL:GA110VP_16 + MOVOL:460V **(16/05/2019 - 30/12/2027)** (COOL:AIR + MOVOL:230V , MOVOL:460V) + MODEL:GA110VP_16 **(31/12/2027 - ...)** MODEL:GA110VP_16 + MOVOL:460V
2090	• 1613 3221 00	1	PISTON VALVE	**(09/03/2017 - 12/07/2017)** COOL:AIR + MODEL:GA110VP_16 + MOVOL:575V **(13/07/2017 - 19/07/2017)** (MOVOL:230V , MOVOL:460V , MOVOL:575V) + COOL:AIR + MODEL:GA110VP_16 **(20/07/2017 - 20/08/2018)** ((MODEL:GA110VP_16 , MODEL:GA75VP_16 , MODEL:GA90VP_16) + MOVOL:575V , (MOVOL:230V , MOVOL:460V) + MODEL:GA110VP_16) + COOL:AIR **(21/08/2018 - 15/05/2019)** ((MODEL:GA110VP_16 , MODEL:GA75VP_16 , MODEL:GA90VP_16) + MOVOL:575V , (MOVOL:230V , MOVOL:460V) + MODEL:GA110VP_16) + COOL:AIR , COOL:WATER + MODEL:GA110VP_16 + MOVOL:460V **(16/05/2019 - 30/12/2027)** (COOL:AIR + MOVOL:230V , MOVOL:460V) + MODEL:GA110VP_16 **(31/12/2027 - ...)** MODEL:GA110VP_16 + MOVOL:460V
2100	• 1622 3662 00	1	SPRING	**(09/03/2017 - 12/07/2017)** COOL:AIR + MODEL:GA110VP_16 + MOVOL:575V **(13/07/2017 - 19/07/2017)** (MOVOL:230V , MOVOL:460V , MOVOL:575V) + COOL:AIR + MODEL:GA110VP_16 **(20/07/2017 - 20/08/2018)** ((MODEL:GA110VP_16 , MODEL:GA75VP_16 , MODEL:GA90VP_16) + MOVOL:575V , (MOVOL:230V , MOVOL:460V) + MODEL:GA110VP_16) + COOL:AIR **(21/08/2018 - 15/05/2019)** ((MODEL:GA110VP_16 , MODEL:GA75VP_16 , MODEL:GA90VP_16) + MOVOL:575V , (MOVOL:230V , MOVOL:460V) + MODEL:GA110VP_16) + COOL:AIR , COOL:WATER + MODEL:GA110VP_16 + MOVOL:460V **(16/05/2019 - 30/12/2027)** (COOL:AIR + MOVOL:230V , MOVOL:460V) + MODEL:GA110VP_16 **(31/12/2027 - ...)** MODEL:GA110VP_16 + MOVOL:460V
2110	• 0663 2101 01	1	O-RING	**(09/03/2017 - 12/07/2017)** COOL:AIR + MODEL:GA110VP_16 + MOVOL:575V **(13/07/2017 - 19/07/2017)** (MOVOL:230V , MOVOL:460V , MOVOL:575V) + COOL:AIR + MODEL:GA110VP_16 **(20/07/2017 - 20/08/2018)** ((MODEL:GA110VP_16 , MODEL:GA75VP_16 , MODEL:GA90VP_16) + MOVOL:575V , (MOVOL:230V , MOVOL:460V) + MODEL:GA110VP_16) + COOL:AIR **(21/08/2018 - 15/05/2019)** ((MODEL:GA110VP_16 , MODEL:GA75VP_16 , MODEL:GA90VP_16) + MOVOL:575V , (MOVOL:230V , MOVOL:460V) + MODEL:GA110VP_16) + COOL:AIR , COOL:WATER + MODEL:GA110VP_16 + MOVOL:460V **(16/05/2019 - 30/12/2027)** (COOL:AIR + MOVOL:230V , MOVOL:460V) + MODEL:GA110VP_16 **(31/12/2027 - ...)** MODEL:GA110VP_16 + MOVOL:460V
2120	• 1622 3663 00	1	PISTON	**(09/03/2017 - 12/07/2017)** COOL:AIR + MODEL:GA110VP_16 + MOVOL:575V **(13/07/2017 - 19/07/2017)** (MOVOL:230V , MOVOL:460V , MOVOL:575V) + COOL:AIR + MODEL:GA110VP_16 **(20/07/2017 - 20/08/2018)** ((MODEL:GA110VP_16 , MODEL:GA75VP_16 , MODEL:GA90VP_16) + MOVOL:575V , (MOVOL:230V , MOVOL:460V) + MODEL:GA110VP_16) + COOL:AIR **(21/08/2018 - 15/05/2019)** ((MODEL:GA110VP_16 , MODEL:GA75VP_16 , MODEL:GA90VP_16) + MOVOL:575V , (MOVOL:230V , MOVOL:460V) + MODEL:GA110VP_16) + COOL:AIR , COOL:WATER + MODEL:GA110VP_16 + MOVOL:460V **(16/05/2019 - 30/12/2027)** (COOL:AIR + MOVOL:230V , MOVOL:460V) + MODEL:GA110VP_16 **(31/12/2027 - ...)** MODEL:GA110VP_16 + MOVOL:460V

Legend:

CAPPRM:ASME - Component approval mechanical:ASME
FREQ:60HZ - Frequency:60 Hz
MODEL:GA90VP_16 - Model:GA 90VSD+
MOVOL:575V - Supply voltage:575 V
COOL:AIR - Cooling:Air cooled
MODEL:GA110VP_16 - Model:GA 110VSD+
MOVOL:230V - Supply voltage:230 V
OILTYP:RXD - Oil type:Roto-Xtend Duty Fluid
COOL:WATER - Cooling:Water cooled
MODEL:GA75VP_16 - Model:GA 75VSD+
MOVOL:460V - Supply voltage:460 V

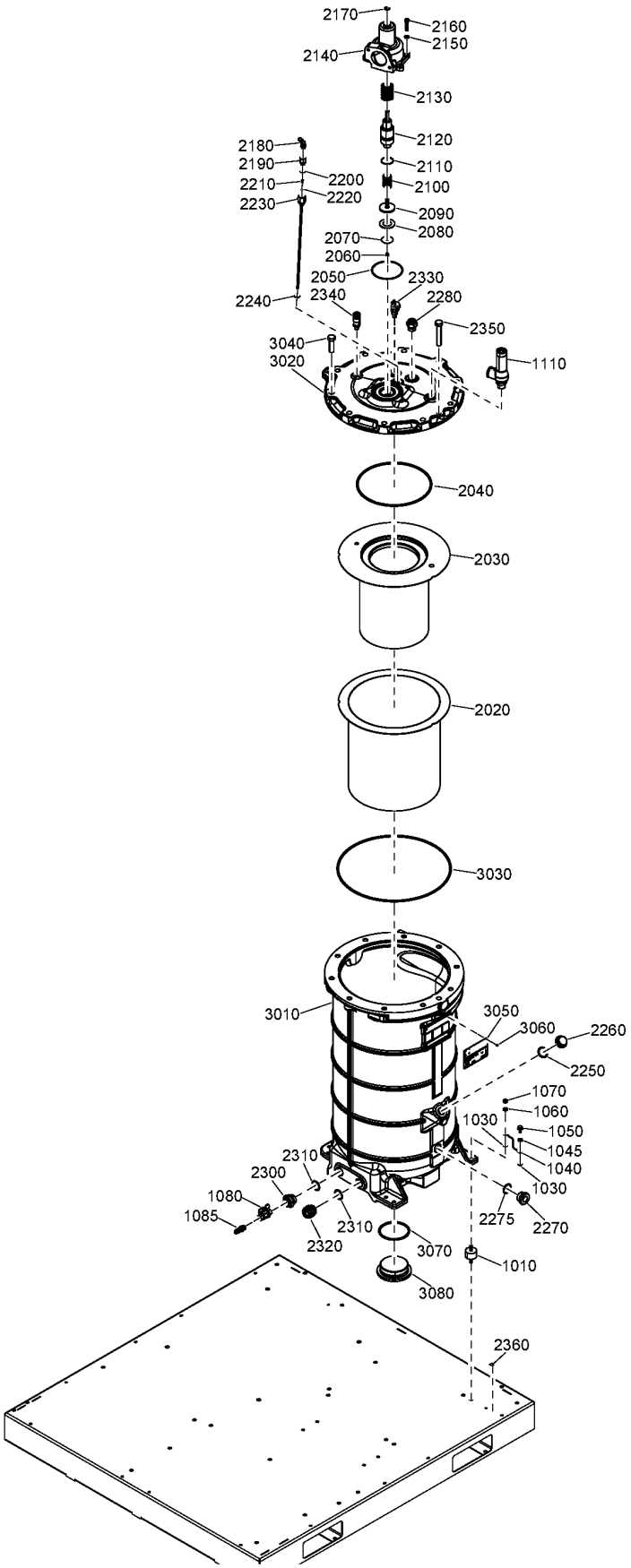
2170
2160
2150
2140
2130
2120
2180
2190
2110
2200
2210
2100
2220
2230
2090
2080
2070
2060
2050
2330
2340
2280
2240
2350
3040
3020
1110
2040
2030
2020
3030
3010
3050
3060
2260
2250
1070
1060
1030
1050
1045
1040
2310
2300
1030
1080
1085
2275
2270
2310
2320
3070
1010
3080
2360

Ref	Part Number	Qty	Name	Validity
2130	• 1622 3664 00	1	SPRING	**(09/03/2017 - 12/07/2017)** COOL:AIR + MODEL:GA110VP_16 + MOVOL:575V **(13/07/2017 - 19/07/2017)** (MOVOL:230V , MOVOL:460V , MOVOL:575V) + COOL:AIR + MODEL:GA110VP_16 **(20/07/2017 - 20/08/2018)** ((MODEL:GA110VP_16 , MODEL:GA75VP_16 , MODEL:GA90VP_16) + MOVOL:575V , (MOVOL:230V , MOVOL:460V) + MODEL:GA110VP_16) + COOL:AIR **(21/08/2018 - 15/05/2019)** ((MODEL:GA110VP_16 , MODEL:GA75VP_16 , MODEL:GA90VP_16) + MOVOL:575V , (MOVOL:230V , MOVOL:460V) + MODEL:GA110VP_16) + COOL:AIR , COOL:WATER + MODEL:GA110VP_16 + MOVOL:460V **(16/05/2019 - 30/12/2027)** (COOL:AIR + MOVOL:230V , MOVOL:460V) + MODEL:GA110VP_16 **(31/12/2027 - ...)** MODEL:GA110VP_16 + MOVOL:460V
2140	• 1625 7277 01	1	HOUSING VALVE	**(09/03/2017 - 12/07/2017)** COOL:AIR + MODEL:GA110VP_16 + MOVOL:575V **(13/07/2017 - 19/07/2017)** (MOVOL:230V , MOVOL:460V , MOVOL:575V) + COOL:AIR + MODEL:GA110VP_16 **(20/07/2017 - 20/08/2018)** ((MODEL:GA110VP_16 , MODEL:GA75VP_16 , MODEL:GA90VP_16) + MOVOL:575V , (MOVOL:230V , MOVOL:460V) + MODEL:GA110VP_16) + COOL:AIR **(21/08/2018 - 15/05/2019)** ((MODEL:GA110VP_16 , MODEL:GA75VP_16 , MODEL:GA90VP_16) + MOVOL:575V , (MOVOL:230V , MOVOL:460V) + MODEL:GA110VP_16) + COOL:AIR , COOL:WATER + MODEL:GA110VP_16 + MOVOL:460V **(16/05/2019 - 30/12/2027)** (COOL:AIR + MOVOL:230V , MOVOL:460V) + MODEL:GA110VP_16 **(31/12/2027 - ...)** MODEL:GA110VP_16 + MOVOL:460V
2150	• 0301 2335 00	4	WASHER	**(09/03/2017 - 12/07/2017)** COOL:AIR + MODEL:GA110VP_16 + MOVOL:575V **(13/07/2017 - 19/07/2017)** (MOVOL:230V , MOVOL:460V , MOVOL:575V) + COOL:AIR + MODEL:GA110VP_16 **(20/07/2017 - 20/08/2018)** ((MODEL:GA110VP_16 , MODEL:GA75VP_16 , MODEL:GA90VP_16) + MOVOL:575V , (MOVOL:230V , MOVOL:460V) + MODEL:GA110VP_16) + COOL:AIR **(21/08/2018 - 15/05/2019)** ((MODEL:GA110VP_16 , MODEL:GA75VP_16 , MODEL:GA90VP_16) + MOVOL:575V , (MOVOL:230V , MOVOL:460V) + MODEL:GA110VP_16) + COOL:AIR , COOL:WATER + MODEL:GA110VP_16 + MOVOL:460V **(16/05/2019 - 30/12/2027)** (COOL:AIR + MOVOL:230V , MOVOL:460V) + MODEL:GA110VP_16 **(31/12/2027 - ...)** MODEL:GA110VP_16 + MOVOL:460V
2160	• 0211 1328 03	4	SCREW	**(09/03/2017 - 12/07/2017)** COOL:AIR + MODEL:GA110VP_16 + MOVOL:575V **(13/07/2017 - 19/07/2017)** (MOVOL:230V , MOVOL:460V , MOVOL:575V) + COOL:AIR + MODEL:GA110VP_16 **(20/07/2017 - 20/08/2018)** ((MODEL:GA110VP_16 , MODEL:GA75VP_16 , MODEL:GA90VP_16) + MOVOL:575V , (MOVOL:230V , MOVOL:460V) + MODEL:GA110VP_16) + COOL:AIR **(21/08/2018 - 15/05/2019)** ((MODEL:GA110VP_16 , MODEL:GA75VP_16 , MODEL:GA90VP_16) + MOVOL:575V , (MOVOL:230V , MOVOL:460V) + MODEL:GA110VP_16) + COOL:AIR , COOL:WATER + MODEL:GA110VP_16 + MOVOL:460V **(16/05/2019 - 30/12/2027)** (COOL:AIR + MOVOL:230V , MOVOL:460V) + MODEL:GA110VP_16 **(31/12/2027 - ...)** MODEL:GA110VP_16 + MOVOL:460V
2170	• 0335 3111 00	1	CIRCLIP	**(09/03/2017 - 12/07/2017)** COOL:AIR + MODEL:GA110VP_16 + MOVOL:575V **(13/07/2017 - 19/07/2017)** (MOVOL:230V , MOVOL:460V , MOVOL:575V) + COOL:AIR + MODEL:GA110VP_16 **(20/07/2017 - 20/08/2018)** ((MODEL:GA110VP_16 , MODEL:GA75VP_16 , MODEL:GA90VP_16) + MOVOL:575V , (MOVOL:230V , MOVOL:460V) + MODEL:GA110VP_16) + COOL:AIR **(21/08/2018 - 15/05/2019)** ((MODEL:GA110VP_16 , MODEL:GA75VP_16 , MODEL:GA90VP_16) + MOVOL:575V , (MOVOL:230V , MOVOL:460V) + MODEL:GA110VP_16) + COOL:AIR , COOL:WATER + MODEL:GA110VP_16 + MOVOL:460V **(16/05/2019 - 30/12/2027)** (COOL:AIR + MOVOL:230V , MOVOL:460V) + MODEL:GA110VP_16 **(31/12/2027 - ...)** MODEL:GA110VP_16 + MOVOL:460V

Legend:

CAPPRM:ASME - Component approval mechanical:ASME
FREQ:60HZ - Frequency:60 Hz
MODEL:GA90VP_16 - Model:GA 90VSD+
MOVOL:575V - Supply voltage:575 V
COOL:AIR - Cooling:Air cooled
MODEL:GA110VP_16 - Model:GA 110VSD+
MOVOL:230V - Supply voltage:230 V
OILTYP:RXD - Oil type:Roto-Xtend Duty Fluid
COOL:WATER - Cooling:Water cooled
MODEL:GA75VP_16 - Model:GA 75VSD+
MOVOL:460V - Supply voltage:460 V

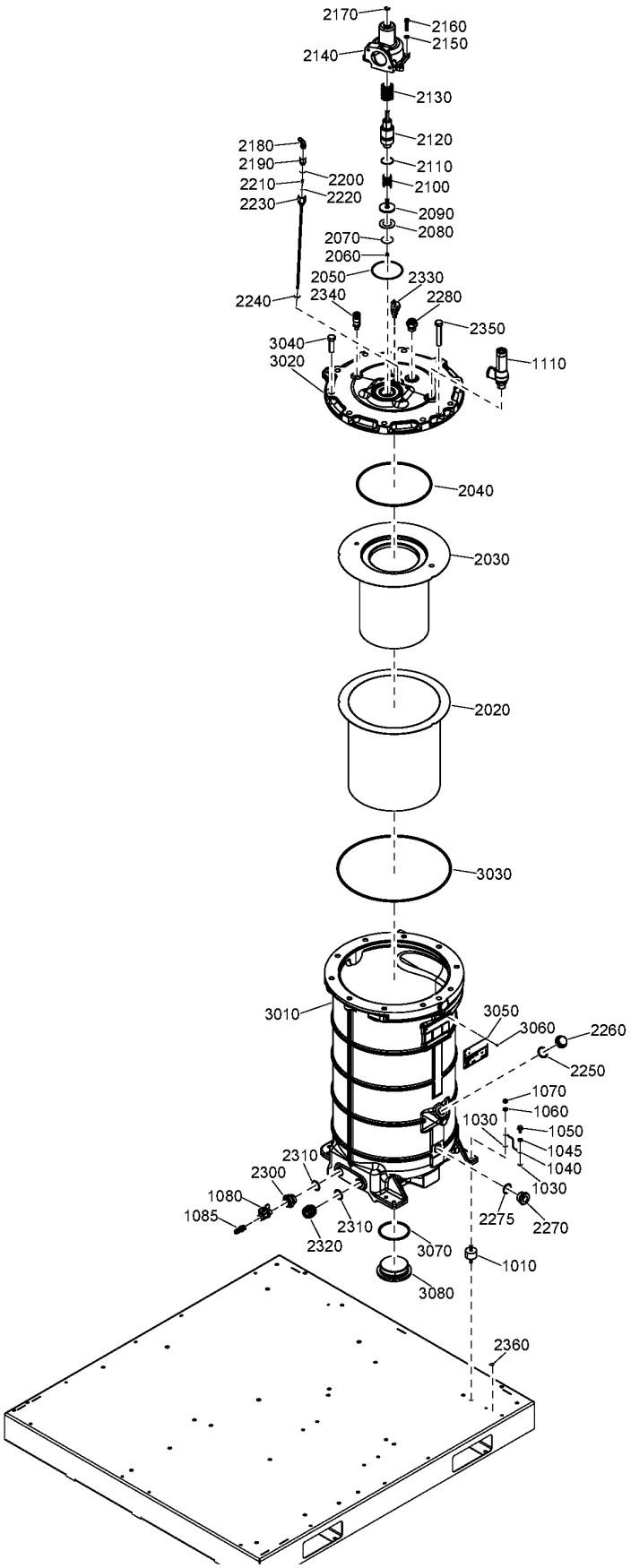
2170
2160
2150
2140
2130
2120
2180
2190
2110
2200
2210
2100
2220
2230
2090
2080
2070
2060
2050
2330
2340
2280
2240
2350
3040
3020
1110
2040
2030
2020
3030
3010
3050
3060
2260
2250
1070
1060
1030
1050
1045
1040
2310
2300
1030
1080
1085
2310
2275
2270
2320
3070
1010
3080
2360

Ref	Part Number	Qty	Name	Validity
2180	• ~~0583 8121 00~~	1	ELBOW	**(09/03/2017 - 12/07/2017)** COOL:AIR + MODEL:GA110VP_16 + MOVOL:575V **(13/07/2017 - 19/07/2017)** (MOVOL:230V , MOVOL:460V , MOVOL:575V) + COOL:AIR + MODEL:GA110VP_16 **(20/07/2017 - 20/08/2018)** ((MODEL:GA110VP_16 , MODEL:GA75VP_16 , MODEL:GA90VP_16) + MOVOL:575V , (MOVOL:230V , MOVOL:460V) + MODEL:GA110VP_16) + COOL:AIR **(21/08/2018 - 15/05/2019)** ((MODEL:GA110VP_16 , MODEL:GA75VP_16 , MODEL:GA90VP_16) + MOVOL:575V , (MOVOL:230V , MOVOL:460V) + MODEL:GA110VP_16) + COOL:AIR , COOL:WATER + MODEL:GA110VP_16 + MOVOL:460V **(16/05/2019 - 30/12/2027)** (COOL:AIR + MOVOL:230V , MOVOL:460V) + MODEL:GA110VP_16
	Substituted by:	0583 8121 58 - ELBOW G1/4 X 6 (quantity: 1)		
2190	• 1629 0314 25	1	NIPPLE	**(09/03/2017 - 12/07/2017)** COOL:AIR + MODEL:GA110VP_16 + MOVOL:575V **(13/07/2017 - 19/07/2017)** (MOVOL:230V , MOVOL:460V , MOVOL:575V) + COOL:AIR + MODEL:GA110VP_16 **(20/07/2017 - 20/08/2018)** ((MODEL:GA110VP_16 , MODEL:GA75VP_16 , MODEL:GA90VP_16) + MOVOL:575V , (MOVOL:230V , MOVOL:460V) + MODEL:GA110VP_16) + COOL:AIR **(21/08/2018 - 15/05/2019)** ((MODEL:GA110VP_16 , MODEL:GA75VP_16 , MODEL:GA90VP_16) + MOVOL:575V , (MOVOL:230V , MOVOL:460V) + MODEL:GA110VP_16) + COOL:AIR , COOL:WATER + MODEL:GA110VP_16 + MOVOL:460V **(16/05/2019 - 30/12/2027)** (COOL:AIR + MOVOL:230V , MOVOL:460V) + MODEL:GA110VP_16 **(31/12/2027 - ...)** MODEL:GA110VP_16 + MOVOL:460V
2200	• 0663 3119 00	1	O-RING	**(09/03/2017 - 12/07/2017)** COOL:AIR + MODEL:GA110VP_16 + MOVOL:575V **(13/07/2017 - 19/07/2017)** (MOVOL:230V , MOVOL:460V , MOVOL:575V) + COOL:AIR + MODEL:GA110VP_16 **(20/07/2017 - 20/08/2018)** ((MODEL:GA110VP_16 , MODEL:GA75VP_16 , MODEL:GA90VP_16) + MOVOL:575V , (MOVOL:230V , MOVOL:460V) + MODEL:GA110VP_16) + COOL:AIR **(21/08/2018 - 15/05/2019)** ((MODEL:GA110VP_16 , MODEL:GA75VP_16 , MODEL:GA90VP_16) + MOVOL:575V , (MOVOL:230V , MOVOL:460V) + MODEL:GA110VP_16) + COOL:AIR , COOL:WATER + MODEL:GA110VP_16 + MOVOL:460V **(16/05/2019 - 30/12/2027)** (COOL:AIR + MOVOL:230V , MOVOL:460V) + MODEL:GA110VP_16 **(31/12/2027 - ...)** MODEL:GA110VP_16 + MOVOL:460V
2210	• 1613 9005 01	1	NON RETURN VALVE	**(09/03/2017 - 12/07/2017)** COOL:AIR + MODEL:GA110VP_16 + MOVOL:575V **(13/07/2017 - 19/07/2017)** (MOVOL:230V , MOVOL:460V , MOVOL:575V) + COOL:AIR + MODEL:GA110VP_16 **(20/07/2017 - 20/08/2018)** ((MODEL:GA110VP_16 , MODEL:GA75VP_16 , MODEL:GA90VP_16) + MOVOL:575V , (MOVOL:230V , MOVOL:460V) + MODEL:GA110VP_16) + COOL:AIR **(21/08/2018 - 15/05/2019)** ((MODEL:GA110VP_16 , MODEL:GA75VP_16 , MODEL:GA90VP_16) + MOVOL:575V , (MOVOL:230V , MOVOL:460V) + MODEL:GA110VP_16) + COOL:AIR , COOL:WATER + MODEL:GA110VP_16 + MOVOL:460V **(16/05/2019 - 30/12/2027)** (COOL:AIR + MOVOL:230V , MOVOL:460V) + MODEL:GA110VP_16 **(31/12/2027 - ...)** MODEL:GA110VP_16 + MOVOL:460V
2220	• 0663 2108 11	1	O-RING	**(09/03/2017 - 12/07/2017)** COOL:AIR + MODEL:GA110VP_16 + MOVOL:575V **(13/07/2017 - 19/07/2017)** (MOVOL:230V , MOVOL:460V , MOVOL:575V) + COOL:AIR + MODEL:GA110VP_16 **(20/07/2017 - 20/08/2018)** ((MODEL:GA110VP_16 , MODEL:GA75VP_16 , MODEL:GA90VP_16) + MOVOL:575V , (MOVOL:230V , MOVOL:460V) + MODEL:GA110VP_16) + COOL:AIR **(21/08/2018 - 15/05/2019)** ((MODEL:GA110VP_16 , MODEL:GA75VP_16 , MODEL:GA90VP_16) + MOVOL:575V , (MOVOL:230V , MOVOL:460V) + MODEL:GA110VP_16) + COOL:AIR , COOL:WATER + MODEL:GA110VP_16 + MOVOL:460V **(16/05/2019 - 30/12/2027)** (COOL:AIR + MOVOL:230V , MOVOL:460V) + MODEL:GA110VP_16 **(31/12/2027 - ...)** MODEL:GA110VP_16 + MOVOL:460V

Legend:

CAPPRM:ASME - Component approval mechanical:ASME
FREQ:60HZ - Frequency:60 Hz
MODEL:GA90VP_16 - Model:GA 90VSD+
MOVOL:575V - Supply voltage:575 V
COOL:AIR - Cooling:Air cooled
MODEL:GA110VP_16 - Model:GA 110VSD+
MOVOL:230V - Supply voltage:230 V
OILTYP:RXD - Oil type:Roto-Xtend Duty Fluid
COOL:WATER - Cooling:Water cooled
MODEL:GA75VP_16 - Model:GA 75VSD+
MOVOL:460V - Supply voltage:460 V

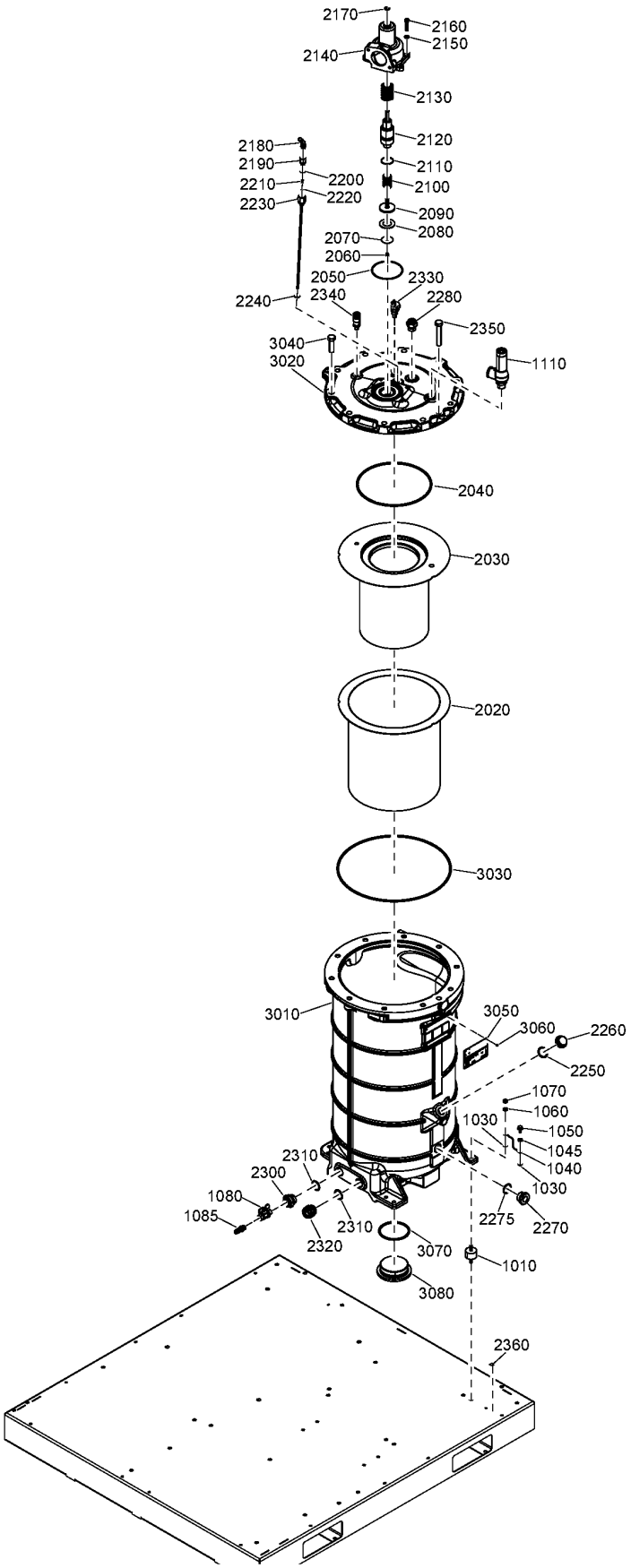
2170
2160
2150
2140
2130
2120
2180
2190
2110
2200
2210
2100
2220
2230
2090
2080
2070
2060
2050
2330
2340
2280
2240
2350
3040
3020
1110
2040
2030
2020
3030
3010
3050
3060
2260
2250
1070
1060
1030
1050
1045
1040
2310
2300
1030
1080
1085
2310
2275
2270
2320
3070
1010
3080
2360

Ref	Part Number	Qty	Name	Validity
2230	• ~~1649 8001 04~~	1	SCAVANGE LINE PIPE	**(09/03/2017 - 12/07/2017)** COOL:AIR + MODEL:GA110VP_16 + MOVOL:575V **(13/07/2017 - 19/07/2017)** (MOVOL:230V , MOVOL:460V , MOVOL:575V) + COOL:AIR + MODEL:GA110VP_16 **(20/07/2017 - 20/08/2018)** ((MODEL:GA110VP_16 , MODEL:GA75VP_16 , MODEL:GA90VP_16) + MOVOL:575V , (MOVOL:230V , MOVOL:460V) + MODEL:GA110VP_16) + COOL:AIR **(21/08/2018 - 15/05/2019)** ((MODEL:GA110VP_16 , MODEL:GA75VP_16 , MODEL:GA90VP_16) + MOVOL:575V , (MOVOL:230V , MOVOL:460V) + MODEL:GA110VP_16) + COOL:AIR , COOL:WATER + MODEL:GA110VP_16 + MOVOL:460V **(16/05/2019 - 16/01/2020)** (COOL:AIR + MOVOL:230V , MOVOL:460V) + MODEL:GA110VP_16
	Substituted by:	1649 7001 00 - SCAVANGE LINE PIPE (quantity: 1)		
2240	• 0663 2113 43	1	O-RING	**(09/03/2017 - 12/07/2017)** COOL:AIR + MODEL:GA110VP_16 + MOVOL:575V **(13/07/2017 - 19/07/2017)** (MOVOL:230V , MOVOL:460V , MOVOL:575V) + COOL:AIR + MODEL:GA110VP_16 **(20/07/2017 - 20/08/2018)** ((MODEL:GA110VP_16 , MODEL:GA75VP_16 , MODEL:GA90VP_16) + MOVOL:575V , (MOVOL:230V , MOVOL:460V) + MODEL:GA110VP_16) + COOL:AIR **(21/08/2018 - 15/05/2019)** ((MODEL:GA110VP_16 , MODEL:GA75VP_16 , MODEL:GA90VP_16) + MOVOL:575V , (MOVOL:230V , MOVOL:460V) + MODEL:GA110VP_16) + COOL:AIR , COOL:WATER + MODEL:GA110VP_16 + MOVOL:460V **(16/05/2019 - 16/01/2020)** (COOL:AIR + MOVOL:230V , MOVOL:460V) + MODEL:GA110VP_16
2250	• 0663 2102 15	1	O-RING	**(09/03/2017 - 12/07/2017)** COOL:AIR + MODEL:GA110VP_16 + MOVOL:575V **(13/07/2017 - 19/07/2017)** (MOVOL:230V , MOVOL:460V , MOVOL:575V) + COOL:AIR + MODEL:GA110VP_16 **(20/07/2017 - 20/08/2018)** ((MODEL:GA110VP_16 , MODEL:GA75VP_16 , MODEL:GA90VP_16) + MOVOL:575V , (MOVOL:230V , MOVOL:460V) + MODEL:GA110VP_16) + COOL:AIR **(21/08/2018 - 15/05/2019)** ((MODEL:GA110VP_16 , MODEL:GA75VP_16 , MODEL:GA90VP_16) + MOVOL:575V , (MOVOL:230V , MOVOL:460V) + MODEL:GA110VP_16) + COOL:AIR , COOL:WATER + MODEL:GA110VP_16 + MOVOL:460V **(16/05/2019 - 30/12/2027)** (COOL:AIR + MOVOL:230V , MOVOL:460V) + MODEL:GA110VP_16 **(31/12/2027 - ...)** MODEL:GA110VP_16 + MOVOL:460V
2260	• 1202 8992 00	1	PLUG	**(09/03/2017 - 12/07/2017)** COOL:AIR + MODEL:GA110VP_16 + MOVOL:575V **(13/07/2017 - 19/07/2017)** (MOVOL:230V , MOVOL:460V , MOVOL:575V) + COOL:AIR + MODEL:GA110VP_16 **(20/07/2017 - 20/08/2018)** ((MODEL:GA110VP_16 , MODEL:GA75VP_16 , MODEL:GA90VP_16) + MOVOL:575V , (MOVOL:230V , MOVOL:460V) + MODEL:GA110VP_16) + COOL:AIR **(21/08/2018 - 15/05/2019)** ((MODEL:GA110VP_16 , MODEL:GA75VP_16 , MODEL:GA90VP_16) + MOVOL:575V , (MOVOL:230V , MOVOL:460V) + MODEL:GA110VP_16) + COOL:AIR , COOL:WATER + MODEL:GA110VP_16 + MOVOL:460V **(16/05/2019 - 30/12/2027)** (COOL:AIR + MOVOL:230V , MOVOL:460V) + MODEL:GA110VP_16 **(31/12/2027 - ...)** MODEL:GA110VP_16 + MOVOL:460V
2270	• 1092 0000 72	1	SIGHT GLASS	**(06/07/2017 - 19/07/2017)** COOL:AIR + MODEL:GA110VP_16 + MOVOL:575V **(20/07/2017 - 20/08/2018)** ((MODEL:GA110VP_16 , MODEL:GA75VP_16 , MODEL:GA90VP_16) + MOVOL:575V , (MOVOL:230V , MOVOL:460V) + MODEL:GA110VP_16) + COOL:AIR **(21/08/2018 - 15/05/2019)** ((MODEL:GA110VP_16 , MODEL:GA75VP_16 , MODEL:GA90VP_16) + MOVOL:575V , (MOVOL:230V , MOVOL:460V) + MODEL:GA110VP_16) + COOL:AIR , COOL:WATER + MODEL:GA110VP_16 + MOVOL:460V **(16/05/2019 - 30/12/2027)** (COOL:AIR + MOVOL:230V , MOVOL:460V) + MODEL:GA110VP_16 **(31/12/2027 - ...)** MODEL:GA110VP_16 + MOVOL:460V

Legend:

CAPPRM:ASME - Component approval mechanical:ASME
FREQ:60HZ - Frequency:60 Hz
MODEL:GA90VP_16 - Model:GA 90VSD+
MOVOL:575V - Supply voltage:575 V
COOL:AIR - Cooling:Air cooled
MODEL:GA110VP_16 - Model:GA 110VSD+
MOVOL:230V - Supply voltage:230 V
OILTYP:RXD - Oil type:Roto-Xtend Duty Fluid
COOL:WATER - Cooling:Water cooled
MODEL:GA75VP_16 - Model:GA 75VSD+
MOVOL:460V - Supply voltage:460 V

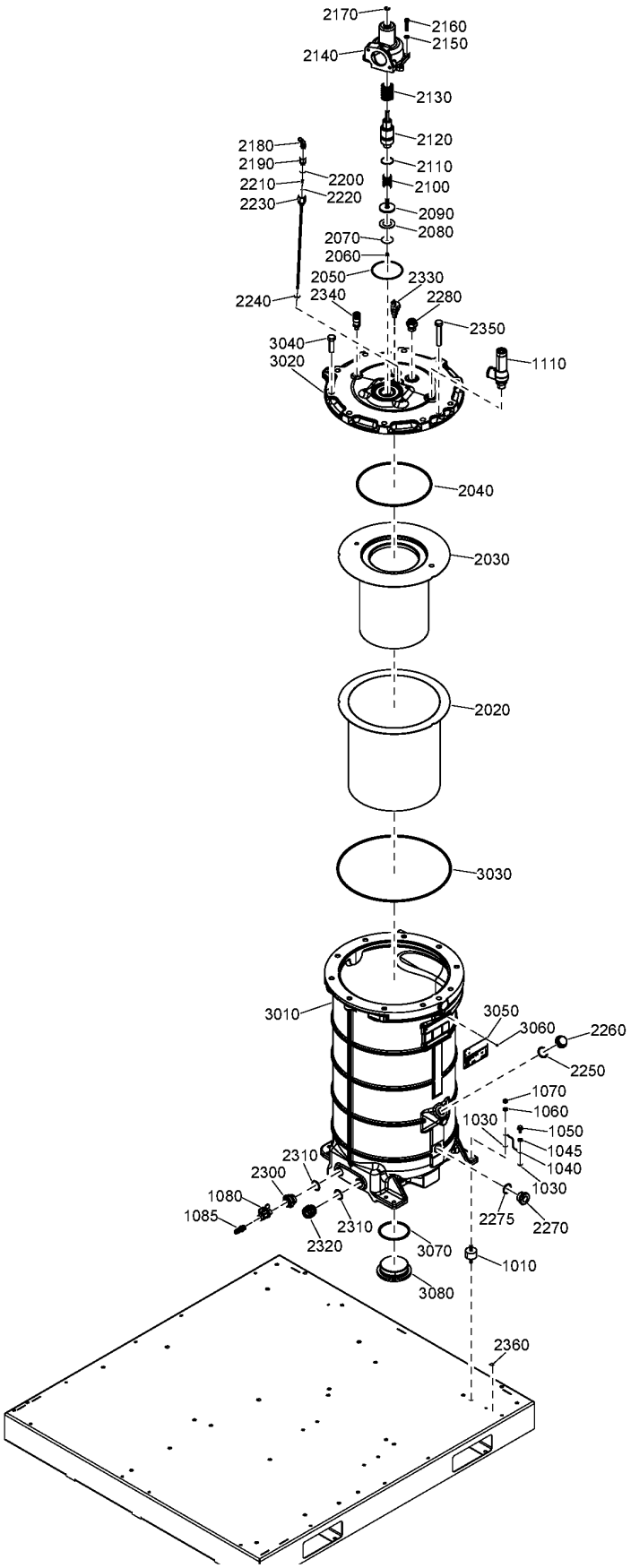
2170
2160
2150
2140
2130
2120
2180
2190
2110
2200
2210
2100
2220
2230
2090
2080
2070
2060
2050
2330
2340
2280
2240
2350
3040
3020
1110
2040
2030
2020
3030
3010
3050
3060
2260
2250
1070
1060
1030
1050
1045
1040
2310
2300
1030
1080
1085
2310
2275
2270
2320
3070
1010
3080
2360

Ref	Part Number	Qty	Name	Validity
2275	• 0663 3130 00	1	O-RING	**(06/07/2017 - 19/07/2017)** COOL:AIR + MODEL:GA110VP_16 + MOVOL:575V **(20/07/2017 - 20/08/2018)** ((MODEL:GA110VP_16 , MODEL:GA75VP_16 , MODEL:GA90VP_16) + MOVOL:575V , (MOVOL:230V , MOVOL:460V) + MODEL:GA110VP_16) + COOL:AIR **(21/08/2018 - 15/05/2019)** ((MODEL:GA110VP_16 , MODEL:GA75VP_16 , MODEL:GA90VP_16) + MOVOL:575V , (MOVOL:230V , MOVOL:460V) + MODEL:GA110VP_16) + COOL:AIR , COOL:WATER + MODEL:GA110VP_16 + MOVOL:460V **(16/05/2019 - 30/12/2027)** (COOL:AIR + MOVOL:230V , MOVOL:460V) + MODEL:GA110VP_16 **(31/12/2027 - ...)** MODEL:GA110VP_16 + MOVOL:460V
2280	• 0580 0017 36	1	NIPPLE	**(09/03/2017 - 12/07/2017)** COOL:AIR + MODEL:GA110VP_16 + MOVOL:575V **(13/07/2017 - 19/07/2017)** (MOVOL:230V , MOVOL:460V , MOVOL:575V) + COOL:AIR + MODEL:GA110VP_16 **(20/07/2017 - 20/08/2018)** ((MODEL:GA110VP_16 , MODEL:GA75VP_16 , MODEL:GA90VP_16) + MOVOL:575V , (MOVOL:230V , MOVOL:460V) + MODEL:GA110VP_16) + COOL:AIR **(21/08/2018 - 15/05/2019)** ((MODEL:GA110VP_16 , MODEL:GA75VP_16 , MODEL:GA90VP_16) + MOVOL:575V , (MOVOL:230V , MOVOL:460V) + MODEL:GA110VP_16) + COOL:AIR , COOL:WATER + MODEL:GA110VP_16 + MOVOL:460V **(16/05/2019 - 30/12/2027)** (COOL:AIR + MOVOL:230V , MOVOL:460V) + MODEL:GA110VP_16 **(31/12/2027 - ...)** MODEL:GA110VP_16 + MOVOL:460V
2300	• 1625 5934 00	1	NIPPLE	**(09/03/2017 - 12/07/2017)** COOL:AIR + MODEL:GA110VP_16 + MOVOL:575V **(13/07/2017 - 19/07/2017)** (MOVOL:230V , MOVOL:460V , MOVOL:575V) + COOL:AIR + MODEL:GA110VP_16 **(20/07/2017 - 20/08/2018)** ((MODEL:GA110VP_16 , MODEL:GA75VP_16 , MODEL:GA90VP_16) + MOVOL:575V , (MOVOL:230V , MOVOL:460V) + MODEL:GA110VP_16) + COOL:AIR **(21/08/2018 - 15/05/2019)** ((MODEL:GA110VP_16 , MODEL:GA75VP_16 , MODEL:GA90VP_16) + MOVOL:575V , (MOVOL:230V , MOVOL:460V) + MODEL:GA110VP_16) + COOL:AIR , COOL:WATER + MODEL:GA110VP_16 + MOVOL:460V **(16/05/2019 - 30/12/2027)** (COOL:AIR + MOVOL:230V , MOVOL:460V) + MODEL:GA110VP_16 **(31/12/2027 - ...)** MODEL:GA110VP_16 + MOVOL:460V
2310	• 0663 3130 00	2	O-RING	**(09/03/2017 - 12/07/2017)** COOL:AIR + MODEL:GA110VP_16 + MOVOL:575V **(13/07/2017 - 19/07/2017)** (MOVOL:230V , MOVOL:460V , MOVOL:575V) + COOL:AIR + MODEL:GA110VP_16 **(20/07/2017 - 20/08/2018)** ((MODEL:GA110VP_16 , MODEL:GA75VP_16 , MODEL:GA90VP_16) + MOVOL:575V , (MOVOL:230V , MOVOL:460V) + MODEL:GA110VP_16) + COOL:AIR **(21/08/2018 - 15/05/2019)** ((MODEL:GA110VP_16 , MODEL:GA75VP_16 , MODEL:GA90VP_16) + MOVOL:575V , (MOVOL:230V , MOVOL:460V) + MODEL:GA110VP_16) + COOL:AIR , COOL:WATER + MODEL:GA110VP_16 + MOVOL:460V **(16/05/2019 - 30/12/2027)** (COOL:AIR + MOVOL:230V , MOVOL:460V) + MODEL:GA110VP_16 **(31/12/2027 - ...)** MODEL:GA110VP_16 + MOVOL:460V
2320	• 1625 4290 00	1	NIPPLE	**(09/03/2017 - 12/07/2017)** COOL:AIR + MODEL:GA110VP_16 + MOVOL:575V **(13/07/2017 - 19/07/2017)** (MOVOL:230V , MOVOL:460V , MOVOL:575V) + COOL:AIR + MODEL:GA110VP_16 **(20/07/2017 - 20/08/2018)** ((MODEL:GA110VP_16 , MODEL:GA75VP_16 , MODEL:GA90VP_16) + MOVOL:575V , (MOVOL:230V , MOVOL:460V) + MODEL:GA110VP_16) + COOL:AIR **(21/08/2018 - 15/05/2019)** ((MODEL:GA110VP_16 , MODEL:GA75VP_16 , MODEL:GA90VP_16) + MOVOL:575V , (MOVOL:230V , MOVOL:460V) + MODEL:GA110VP_16) + COOL:AIR , COOL:WATER + MODEL:GA110VP_16 + MOVOL:460V **(16/05/2019 - 30/12/2027)** (COOL:AIR + MOVOL:230V , MOVOL:460V) + MODEL:GA110VP_16 **(31/12/2027 - ...)** MODEL:GA110VP_16 + MOVOL:460V

Legend:

CAPPRM:ASME - Component approval mechanical:ASME
FREQ:60HZ - Frequency:60 Hz
MODEL:GA90VP_16 - Model:GA 90VSD+
MOVOL:575V - Supply voltage:575 V
COOL:AIR - Cooling:Air cooled
MODEL:GA110VP_16 - Model:GA 110VSD+
MOVOL:230V - Supply voltage:230 V
OILTYP:RXD - Oil type:Roto-Xtend Duty Fluid
COOL:WATER - Cooling:Water cooled
MODEL:GA75VP_16 - Model:GA 75VSD+
MOVOL:460V - Supply voltage:460 V

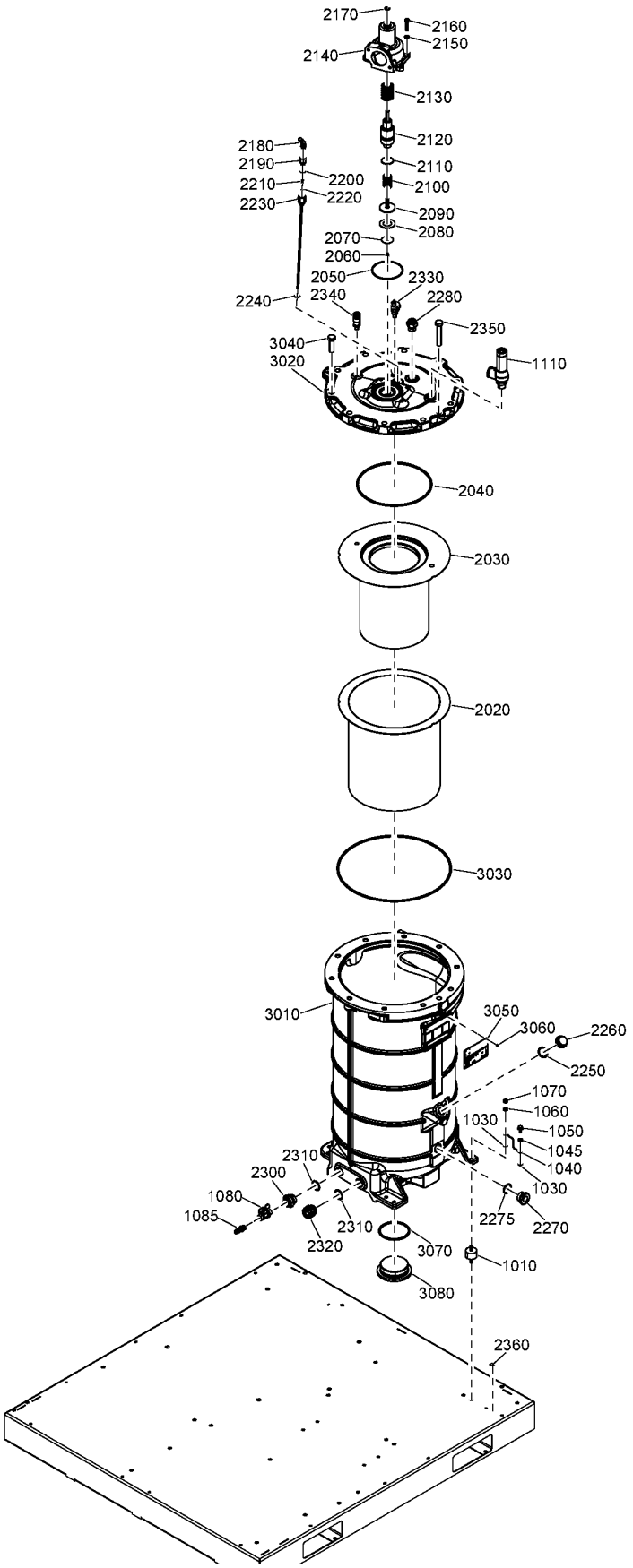
2170
2160
2150
2140
2130
2120
2180
2190
2110
2200
2210
2100
2220
2230
2090
2080
2070
2060
2050
2330
2340
2280
2240
2350
3040
3020
1110
2040
2030
2020
3030
3010
3050
3060
2260
2250
1070
1060
1030
1050
1045
1040
2310
2300
1030
1080
1085
2275
2270
2310
2320
3070
1010
3080
2360

Ref	Part Number	Qty	Name	Validity
2330	• 1089 0637 29	1	TEMPERATURE SWITCH	**(09/03/2017 - 12/07/2017)** COOL:AIR + MODEL:GA110VP_16 + MOVOL:575V **(13/07/2017 - 19/07/2017)** (MOVOL:230V , MOVOL:460V , MOVOL:575V) + COOL:AIR + MODEL:GA110VP_16 **(20/07/2017 - 20/08/2018)** ((MODEL:GA110VP_16 , MODEL:GA75VP_16 , MODEL:GA90VP_16) + MOVOL:575V , (MOVOL:230V , MOVOL:460V) + MODEL:GA110VP_16) + COOL:AIR **(21/08/2018 - 15/05/2019)** ((MODEL:GA110VP_16 , MODEL:GA75VP_16 , MODEL:GA90VP_16) + MOVOL:575V , (MOVOL:230V , MOVOL:460V) + MODEL:GA110VP_16) + COOL:AIR , COOL:WATER + MODEL:GA110VP_16 + MOVOL:460V **(16/05/2019 - 30/12/2027)** (COOL:AIR + MOVOL:230V , MOVOL:460V) + MODEL:GA110VP_16 **(31/12/2027 - ...)** MODEL:GA110VP_16 + MOVOL:460V
2340	• 1089 9625 16	1	PRESSURE SENSOR	**(09/03/2017 - 12/07/2017)** COOL:AIR + MODEL:GA110VP_16 + MOVOL:575V **(13/07/2017 - 19/07/2017)** (MOVOL:230V , MOVOL:460V , MOVOL:575V) + COOL:AIR + MODEL:GA110VP_16 **(20/07/2017 - 20/08/2018)** ((MODEL:GA110VP_16 , MODEL:GA75VP_16 , MODEL:GA90VP_16) + MOVOL:575V , (MOVOL:230V , MOVOL:460V) + MODEL:GA110VP_16) + COOL:AIR **(21/08/2018 - 15/05/2019)** ((MODEL:GA110VP_16 , MODEL:GA75VP_16 , MODEL:GA90VP_16) + MOVOL:575V , (MOVOL:230V , MOVOL:460V) + MODEL:GA110VP_16) + COOL:AIR , COOL:WATER + MODEL:GA110VP_16 + MOVOL:460V **(16/05/2019 - 30/12/2027)** (COOL:AIR + MOVOL:230V , MOVOL:460V) + MODEL:GA110VP_16 **(31/12/2027 - ...)** MODEL:GA110VP_16 + MOVOL:460V
2350	• 0147 1111 06	1	SCREW	**(06/07/2017 - 19/07/2017)** COOL:AIR + MODEL:GA110VP_16 + MOVOL:575V **(20/07/2017 - 20/08/2018)** ((MODEL:GA110VP_16 , MODEL:GA75VP_16 , MODEL:GA90VP_16) + MOVOL:575V , (MOVOL:230V , MOVOL:460V) + MODEL:GA110VP_16) + COOL:AIR **(21/08/2018 - 15/05/2019)** ((MODEL:GA110VP_16 , MODEL:GA75VP_16 , MODEL:GA90VP_16) + MOVOL:575V , (MOVOL:230V , MOVOL:460V) + MODEL:GA110VP_16) + COOL:AIR , COOL:WATER + MODEL:GA110VP_16 + MOVOL:460V **(16/05/2019 - 30/12/2027)** (COOL:AIR + MOVOL:230V , MOVOL:460V) + MODEL:GA110VP_16 **(31/12/2027 - ...)** MODEL:GA110VP_16 + MOVOL:460V
	• 1649 8003 02	1	OIL VESSEL	**(06/07/2017 - 19/07/2017)** COOL:AIR + MODEL:GA110VP_16 + MOVOL:575V **(20/07/2017 - 16/01/2018)** COOL:AIR + MOVOL:575V **(16/05/2019 - ...)** COOL:AIR + MOVOL:575V
	• 1649 8002 98			**(09/03/2017 - 05/07/2017)** COOL:AIR + MODEL:GA110VP_16 + MOVOL:575V **(06/07/2017 - 12/07/2017)** **(13/07/2017 - 16/01/2018)** (MOVOL:230V , MOVOL:460V) + COOL:AIR + MODEL:GA110VP_16 **(17/01/2018 - 20/08/2018)** ((MODEL:GA110VP_16 , MODEL:GA75VP_16 , MODEL:GA90VP_16) + MOVOL:575V , (MOVOL:230V , MOVOL:460V) + MODEL:GA110VP_16) + COOL:AIR **(21/08/2018 - 15/05/2019)** ((MODEL:GA110VP_16 , MODEL:GA75VP_16 , MODEL:GA90VP_16) + MOVOL:575V , (MOVOL:230V , MOVOL:460V) + MODEL:GA110VP_16) + COOL:AIR , COOL:WATER + MODEL:GA110VP_16 + MOVOL:460V **(16/05/2019 - 30/12/2027)** (COOL:AIR + MOVOL:230V , MOVOL:460V) + MODEL:GA110VP_16 **(31/12/2027 - ...)** MODEL:GA110VP_16 + MOVOL:460V
3010	••	1	VESSEL OIL	**(09/03/2017 - 12/07/2017)** COOL:AIR + MODEL:GA110VP_16 + MOVOL:575V **(13/07/2017 - 19/07/2017)** (MOVOL:230V , MOVOL:460V , MOVOL:575V) + COOL:AIR + MODEL:GA110VP_16 **(20/07/2017 - 20/08/2018)** ((MODEL:GA110VP_16 , MODEL:GA75VP_16 , MODEL:GA90VP_16) + MOVOL:575V , (MOVOL:230V , MOVOL:460V) + MODEL:GA110VP_16) + COOL:AIR **(21/08/2018 - 15/05/2019)** ((MODEL:GA110VP_16 , MODEL:GA75VP_16 , MODEL:GA90VP_16) + MOVOL:575V , (MOVOL:230V , MOVOL:460V) + MODEL:GA110VP_16) + COOL:AIR , COOL:WATER + MODEL:GA110VP_16 + MOVOL:460V **(16/05/2019 - 30/12/2027)** (COOL:AIR + MOVOL:230V , MOVOL:460V) + MODEL:GA110VP_16 **(31/12/2027 - ...)** MODEL:GA110VP_16 + MOVOL:460V

Legend:

CAPPRM:ASME - Component approval mechanical:ASME
FREQ:60HZ - Frequency:60 Hz
MODEL:GA90VP_16 - Model:GA 90VSD+
MOVOL:575V - Supply voltage:575 V
COOL:AIR - Cooling:Air cooled
MODEL:GA110VP_16 - Model:GA 110VSD+
MOVOL:230V - Supply voltage:230 V
OILTYP:RXD - Oil type:Roto-Xtend Duty Fluid
COOL:WATER - Cooling:Water cooled
MODEL:GA75VP_16 - Model:GA 75VSD+
MOVOL:460V - Supply voltage:460 V

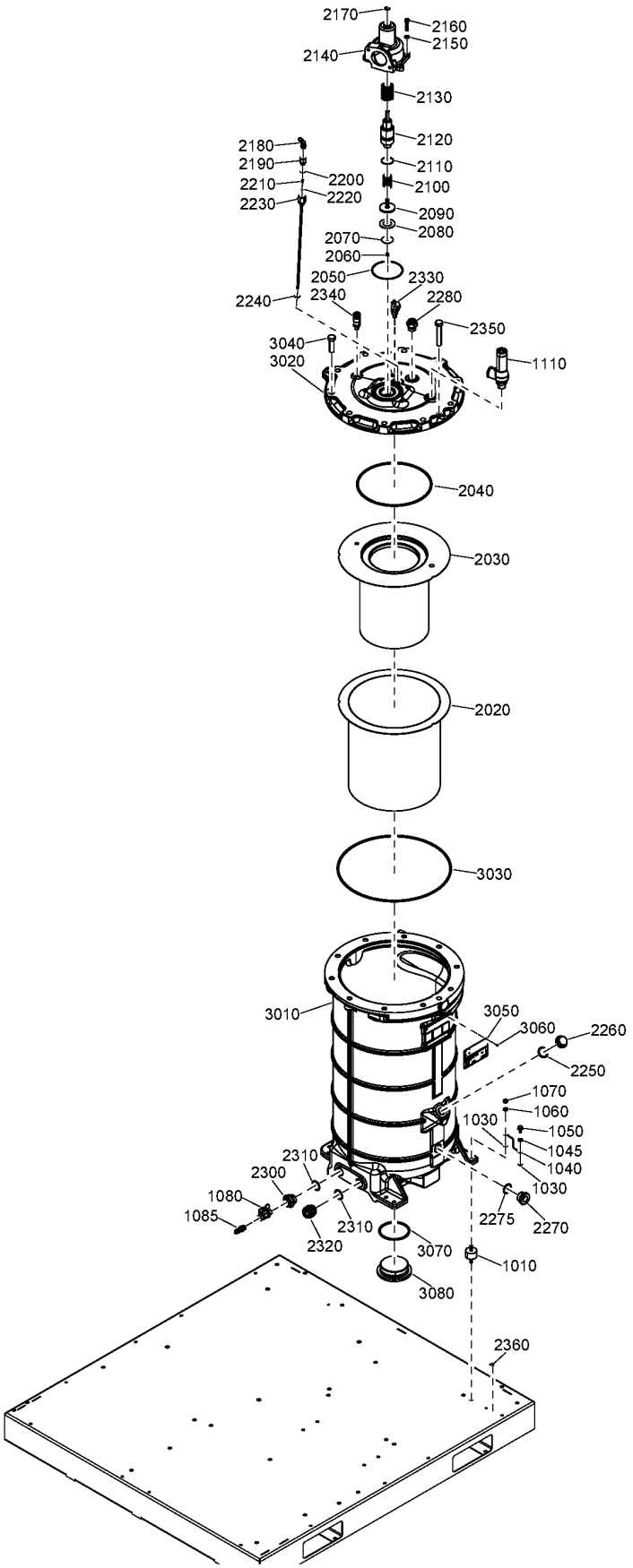
2170
2160
2150
2140
2130
2120
2180
2190
2110
2200
2210
2100
2220
2230
2090
2080
2070
2060
2050
2330
2340
2280
2240
2350
3040
3020
1110
2040
2030
2020
3030
3010
3050
3060
2260
2250
1070
1060
1030
1050
1045
1040
2310
2300
1030
1080
1085
2275
2270
2310
2320
3070
1010
3080
2360

Ref	Part Number	Qty	Name	Validity
3020 ••	1649 8001 02	1	TOP COVER	**(09/03/2017 - 12/07/2017)** COOL:AIR + MODEL:GA110VP_16 + MOVOL:575V **(13/07/2017 - 19/07/2017)** (MOVOL:230V , MOVOL:460V , MOVOL:575V) + COOL:AIR + MODEL:GA110VP_16 **(20/07/2017 - 20/08/2018)** ((MODEL:GA110VP_16 , MODEL:GA75VP_16 , MODEL:GA90VP_16) + MOVOL:575V , (MOVOL:230V , MOVOL:460V) + MODEL:GA110VP_16) + COOL:AIR **(21/08/2018 - 15/05/2019)** ((MODEL:GA110VP_16 , MODEL:GA75VP_16 , MODEL:GA90VP_16) + MOVOL:575V , (MOVOL:230V , MOVOL:460V) + MODEL:GA110VP_16) + COOL:AIR , COOL:WATER + MODEL:GA110VP_16 + MOVOL:460V **(16/05/2019 - 30/12/2027)** (COOL:AIR + MOVOL:230V , MOVOL:460V) + MODEL:GA110VP_16 **(31/12/2027 - ...)** MODEL:GA110VP_16 + MOVOL:460V
3030 ••	0663 2105 07	1	O-RING	**(09/03/2017 - 12/07/2017)** COOL:AIR + MODEL:GA110VP_16 + MOVOL:575V **(13/07/2017 - 19/07/2017)** (MOVOL:230V , MOVOL:460V , MOVOL:575V) + COOL:AIR + MODEL:GA110VP_16 **(20/07/2017 - 20/08/2018)** ((MODEL:GA110VP_16 , MODEL:GA75VP_16 , MODEL:GA90VP_16) + MOVOL:575V , (MOVOL:230V , MOVOL:460V) + MODEL:GA110VP_16) + COOL:AIR **(21/08/2018 - 15/05/2019)** ((MODEL:GA110VP_16 , MODEL:GA75VP_16 , MODEL:GA90VP_16) + MOVOL:575V , (MOVOL:230V , MOVOL:460V) + MODEL:GA110VP_16) + COOL:AIR , COOL:WATER + MODEL:GA110VP_16 + MOVOL:460V **(16/05/2019 - 30/12/2027)** (COOL:AIR + MOVOL:230V , MOVOL:460V) + MODEL:GA110VP_16 **(31/12/2027 - ...)** MODEL:GA110VP_16 + MOVOL:460V
3040 ••	0147 1107 92	10	HEXAGON BOLT	**(09/03/2017 - 12/07/2017)** COOL:AIR + MODEL:GA110VP_16 + MOVOL:575V **(13/07/2017 - 19/07/2017)** (MOVOL:230V , MOVOL:460V , MOVOL:575V) + COOL:AIR + MODEL:GA110VP_16 **(20/07/2017 - 20/08/2018)** ((MODEL:GA110VP_16 , MODEL:GA75VP_16 , MODEL:GA90VP_16) + MOVOL:575V , (MOVOL:230V , MOVOL:460V) + MODEL:GA110VP_16) + COOL:AIR **(21/08/2018 - 15/05/2019)** ((MODEL:GA110VP_16 , MODEL:GA75VP_16 , MODEL:GA90VP_16) + MOVOL:575V , (MOVOL:230V , MOVOL:460V) + MODEL:GA110VP_16) + COOL:AIR , COOL:WATER + MODEL:GA110VP_16 + MOVOL:460V **(16/05/2019 - 30/12/2027)** (COOL:AIR + MOVOL:230V , MOVOL:460V) + MODEL:GA110VP_16 **(31/12/2027 - ...)** MODEL:GA110VP_16 + MOVOL:460V
3050 ••		1	DATA PLATE	**(06/07/2017 - 19/07/2017)** COOL:AIR + MODEL:GA110VP_16 + MOVOL:575V **(20/07/2017 - 16/01/2018)** COOL:AIR + MOVOL:575V **(21/08/2018 - 21/08/2018)** COOL:AIR + MOVOL:575V
3050 ••		1	DATA PLATE	**(09/03/2017 - 05/07/2017)** COOL:AIR + MODEL:GA110VP_16 + MOVOL:575V **(06/07/2017 - 12/07/2017)** **(13/07/2017 - 16/01/2018)** (MOVOL:230V , MOVOL:460V) + COOL:AIR + MODEL:GA110VP_16 **(17/01/2018 - 20/08/2018)** ((MODEL:GA110VP_16 , MODEL:GA75VP_16 , MODEL:GA90VP_16) + MOVOL:575V , (MOVOL:230V , MOVOL:460V) + MODEL:GA110VP_16) + COOL:AIR **(21/08/2018 - 15/05/2019)** ((MODEL:GA110VP_16 , MODEL:GA75VP_16 , MODEL:GA90VP_16) + MOVOL:575V , (MOVOL:230V , MOVOL:460V) + MODEL:GA110VP_16) + COOL:AIR , COOL:WATER + MODEL:GA110VP_16 + MOVOL:460V **(16/05/2019 - 30/12/2027)** (COOL:AIR + MOVOL:230V , MOVOL:460V) + MODEL:GA110VP_16 **(31/12/2027 - ...)** MODEL:GA110VP_16 + MOVOL:460V
3060 ••	0244 4184 00	4	DRIVE SCREW	**(09/03/2017 - 12/07/2017)** COOL:AIR + MODEL:GA110VP_16 + MOVOL:575V **(13/07/2017 - 19/07/2017)** (MOVOL:230V , MOVOL:460V , MOVOL:575V) + COOL:AIR + MODEL:GA110VP_16 **(20/07/2017 - 20/08/2018)** ((MODEL:GA110VP_16 , MODEL:GA75VP_16 , MODEL:GA90VP_16) + MOVOL:575V , (MOVOL:230V , MOVOL:460V) + MODEL:GA110VP_16) + COOL:AIR **(21/08/2018 - 15/05/2019)** ((MODEL:GA110VP_16 , MODEL:GA75VP_16 , MODEL:GA90VP_16) + MOVOL:575V , (MOVOL:230V , MOVOL:460V) + MODEL:GA110VP_16) + COOL:AIR , COOL:WATER + MODEL:GA110VP_16 + MOVOL:460V **(16/05/2019 - 30/12/2027)** (COOL:AIR + MOVOL:230V , MOVOL:460V) + MODEL:GA110VP_16 **(31/12/2027 - ...)** MODEL:GA110VP_16 + MOVOL:460V

Legend:

CAPPRM:ASME - Component approval mechanical:ASME
FREQ:60HZ - Frequency:60 Hz
MODEL:GA90VP_16 - Model:GA 90VSD+
MOVOL:575V - Supply voltage:575 V
COOL:AIR - Cooling:Air cooled
MODEL:GA110VP_16 - Model:GA 110VSD+
MOVOL:230V - Supply voltage:230 V
OILTYP:RXD - Oil type:Roto-Xtend Duty Fluid
COOL:WATER - Cooling:Water cooled
MODEL:GA75VP_16 - Model:GA 75VSD+
MOVOL:460V - Supply voltage:460 V

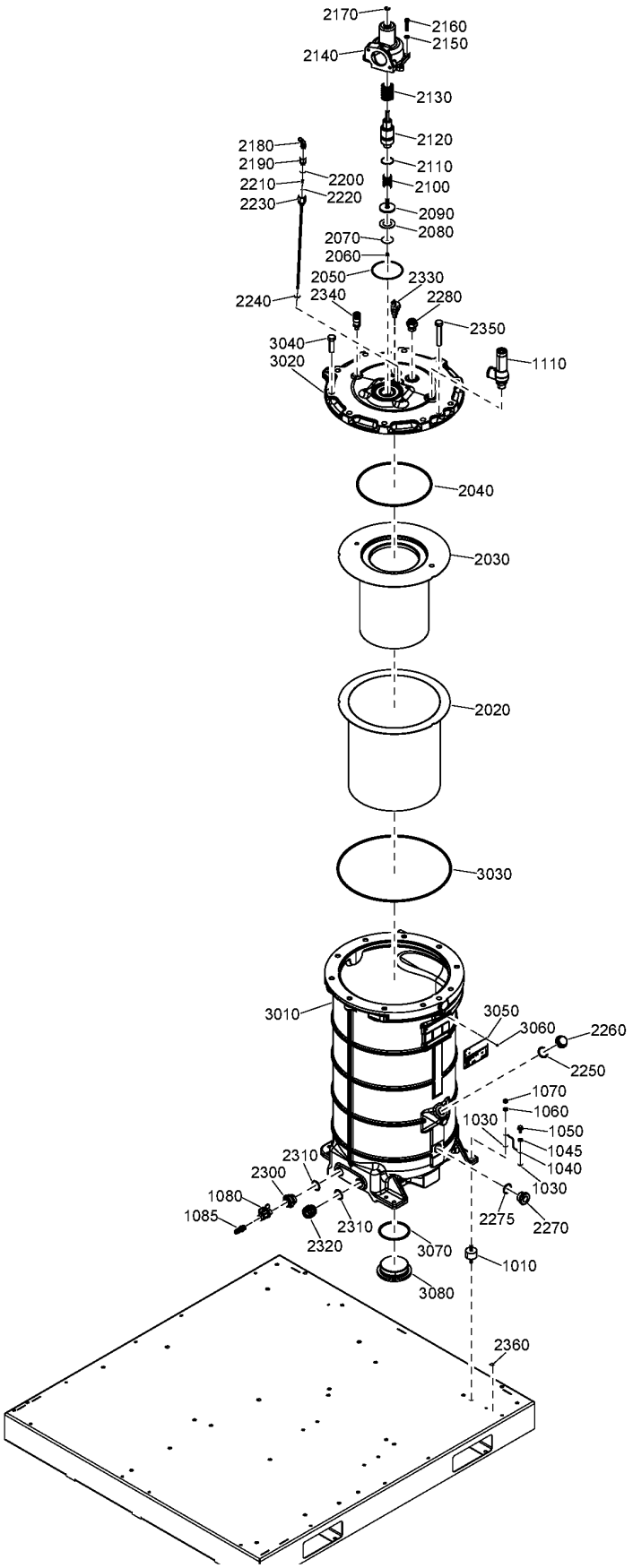
2170
2160
2150
2140
2130
2120
2180
2190
2110
2200
2210
2100
2220
2230
2090
2080
2070
2060
2050
2330
2340
2280
2240
2350
3040
3020
1110
2040
2030
2020
3030
3010
3050
3060
2260
2250
1070
1060
1030
1050
1045
1040
2310
2300
1030
1080
1085
2310
2275
2270
2320
3070
1010
3080
2360

Ref	Part Number	Qty	Name	Validity
3070	•• 0663 2115 45	1	O-RING	**(09/03/2017 - 12/07/2017)** COOL:AIR + MODEL:GA110VP_16 + MOVOL:575V **(13/07/2017 - 19/07/2017)** (MOVOL:230V , MOVOL:460V , MOVOL:575V) + COOL:AIR + MODEL:GA110VP_16 **(20/07/2017 - 20/08/2018)** ((MODEL:GA110VP_16 , MODEL:GA75VP_16 , MODEL:GA90VP_16) + MOVOL:575V , (MOVOL:230V , MOVOL:460V) + MODEL:GA110VP_16) + COOL:AIR **(21/08/2018 - 15/05/2019)** ((MODEL:GA110VP_16 , MODEL:GA75VP_16 , MODEL:GA90VP_16) + MOVOL:575V , (MOVOL:230V , MOVOL:460V) + MODEL:GA110VP_16) + COOL:AIR , COOL:WATER + MODEL:GA110VP_16 + MOVOL:460V **(16/05/2019 - 30/12/2027)** (COOL:AIR + MOVOL:230V , MOVOL:460V) + MODEL:GA110VP_16 **(31/12/2027 - ...)** MODEL:GA110VP_16 + MOVOL:460V
3080	•• 1625 7620 00	1	PLUG	**(09/03/2017 - 12/07/2017)** COOL:AIR + MODEL:GA110VP_16 + MOVOL:575V **(13/07/2017 - 19/07/2017)** (MOVOL:230V , MOVOL:460V , MOVOL:575V) + COOL:AIR + MODEL:GA110VP_16 **(20/07/2017 - 20/08/2018)** ((MODEL:GA110VP_16 , MODEL:GA75VP_16 , MODEL:GA90VP_16) + MOVOL:575V , (MOVOL:230V , MOVOL:460V) + MODEL:GA110VP_16) + COOL:AIR **(21/08/2018 - 15/05/2019)** ((MODEL:GA110VP_16 , MODEL:GA75VP_16 , MODEL:GA90VP_16) + MOVOL:575V , (MOVOL:230V , MOVOL:460V) + MODEL:GA110VP_16) + COOL:AIR , COOL:WATER + MODEL:GA110VP_16 + MOVOL:460V **(16/05/2019 - 30/12/2027)** (COOL:AIR + MOVOL:230V , MOVOL:460V) + MODEL:GA110VP_16 **(31/12/2027 - ...)** MODEL:GA110VP_16 + MOVOL:460V

Legend:

CAPPRM:ASME - Component approval mechanical:ASME
FREQ:60HZ - Frequency:60 Hz
MODEL:GA90VP_16 - Model:GA 90VSD+
MOVOL:575V - Supply voltage:575 V
COOL:AIR - Cooling:Air cooled
MODEL:GA110VP_16 - Model:GA 110VSD+
MOVOL:230V - Supply voltage:230 V
OILTYP:RXD - Oil type:Roto-Xtend Duty Fluid
COOL:WATER - Cooling:Water cooled
MODEL:GA75VP_16 - Model:GA 75VSD+
MOVOL:460V - Supply voltage:460 V

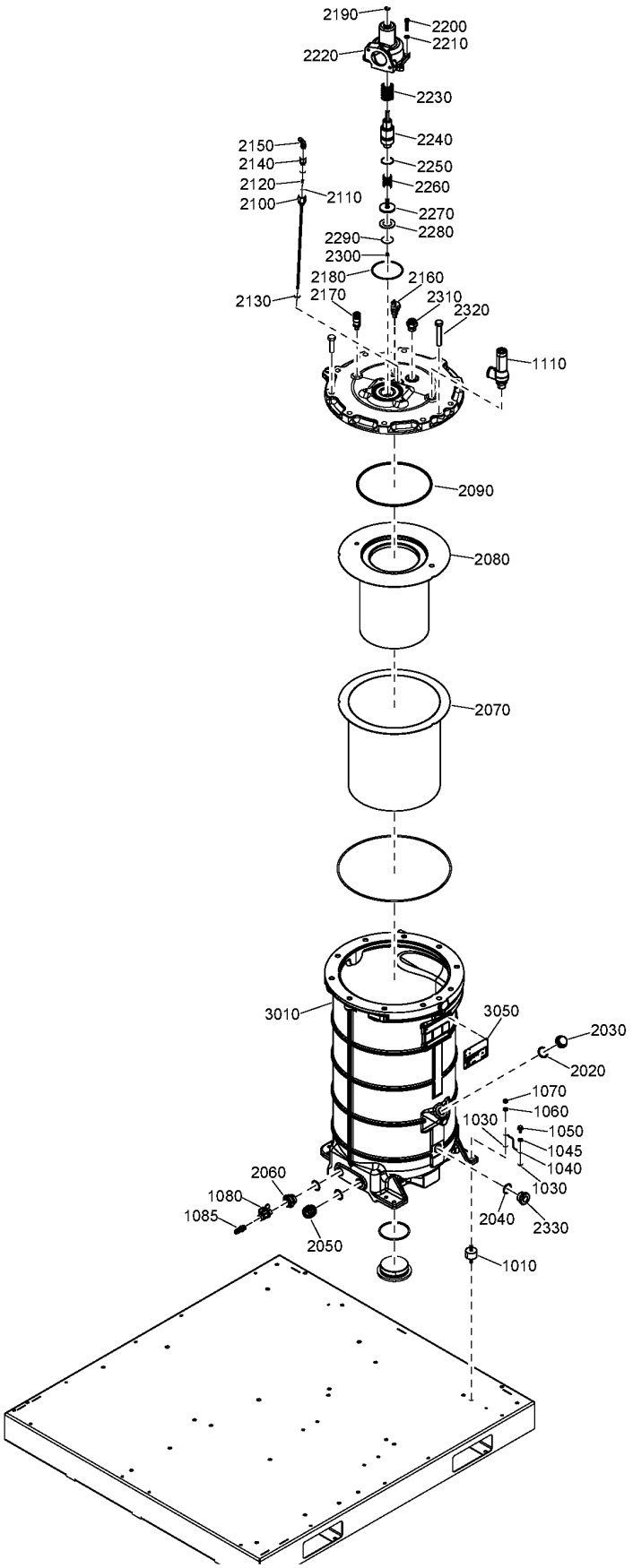
2190
2200
2210
2220
2230
2240
2250
2260
2270
2280
2290
2300
2150
2140
2120
2100
2110
2180
2160
2170
2310
2320
2130
1110
2090
2080
2070
3010
3050
2030
2020
1070
1060
1030
1050
1045
1040
1030
2060
1080
1085
2050
2040
2330
1010

Ref	Part Number	Qty	Name	Validity
1010	1649 8002 87	4	BUFFER	**(09/03/2017 - 12/07/2017)** COOL:AIR + MODEL:GA110VP_16 + MOVOL:575V **(13/07/2017 - 19/07/2017)** (MOVOL:230V , MOVOL:460V , MOVOL:575V) + COOL:AIR + MODEL:GA110VP_16 **(20/07/2017 - 20/08/2018)** ((MODEL:GA110VP_16 , MODEL:GA75VP_16 , MODEL:GA90VP_16) + MOVOL:575V , (MOVOL:230V , MOVOL:460V) + MODEL:GA110VP_16) + COOL:AIR **(21/08/2018 - 30/12/2027)** ((MODEL:GA110VP_16 , MODEL:GA75VP_16 , MODEL:GA90VP_16) + MOVOL:575V , (MOVOL:230V , MOVOL:460V) + MODEL:GA110VP_16) + COOL:AIR , COOL:WATER + MODEL:GA110VP_16 + MOVOL:460V **(31/12/2027 - ...)**
1030	0333 3227 00	2	WASHER	**(09/03/2017 - 12/07/2017)** COOL:AIR + MODEL:GA110VP_16 + MOVOL:575V **(13/07/2017 - 19/07/2017)** (MOVOL:230V , MOVOL:460V , MOVOL:575V) + COOL:AIR + MODEL:GA110VP_16 **(20/07/2017 - 20/08/2018)** ((MODEL:GA110VP_16 , MODEL:GA75VP_16 , MODEL:GA90VP_16) + MOVOL:575V , (MOVOL:230V , MOVOL:460V) + MODEL:GA110VP_16) + COOL:AIR **(21/08/2018 - 30/12/2027)** ((MODEL:GA110VP_16 , MODEL:GA75VP_16 , MODEL:GA90VP_16) + MOVOL:575V , (MOVOL:230V , MOVOL:460V) + MODEL:GA110VP_16) + COOL:AIR , COOL:WATER + MODEL:GA110VP_16 + MOVOL:460V **(31/12/2027 - ...)**
1040	1613 8967 12	1	GROUNDING WIRE	**(09/03/2017 - 12/07/2017)** COOL:AIR + MODEL:GA110VP_16 + MOVOL:575V **(13/07/2017 - 19/07/2017)** (MOVOL:230V , MOVOL:460V , MOVOL:575V) + COOL:AIR + MODEL:GA110VP_16 **(20/07/2017 - 20/08/2018)** ((MODEL:GA110VP_16 , MODEL:GA75VP_16 , MODEL:GA90VP_16) + MOVOL:575V , (MOVOL:230V , MOVOL:460V) + MODEL:GA110VP_16) + COOL:AIR **(21/08/2018 - 30/12/2027)** ((MODEL:GA110VP_16 , MODEL:GA75VP_16 , MODEL:GA90VP_16) + MOVOL:575V , (MOVOL:230V , MOVOL:460V) + MODEL:GA110VP_16) + COOL:AIR , COOL:WATER + MODEL:GA110VP_16 + MOVOL:460V **(31/12/2027 - ...)**
1045	0301 2335 00	1	WASHER	**(05/05/2017 - 12/07/2017)** COOL:AIR + MODEL:GA110VP_16 + MOVOL:575V **(13/07/2017 - 19/07/2017)** (MOVOL:230V , MOVOL:460V , MOVOL:575V) + COOL:AIR + MODEL:GA110VP_16 **(20/07/2017 - 20/08/2018)** ((MODEL:GA110VP_16 , MODEL:GA75VP_16 , MODEL:GA90VP_16) + MOVOL:575V , (MOVOL:230V , MOVOL:460V) + MODEL:GA110VP_16) + COOL:AIR **(21/08/2018 - 30/12/2027)** ((MODEL:GA110VP_16 , MODEL:GA75VP_16 , MODEL:GA90VP_16) + MOVOL:575V , (MOVOL:230V , MOVOL:460V) + MODEL:GA110VP_16) + COOL:AIR , COOL:WATER + MODEL:GA110VP_16 + MOVOL:460V **(31/12/2027 - ...)**
1050	0226 0301 00	1	TAPPING SCREW	**(09/03/2017 - 12/07/2017)** COOL:AIR + MODEL:GA110VP_16 + MOVOL:575V **(13/07/2017 - 19/07/2017)** (MOVOL:230V , MOVOL:460V , MOVOL:575V) + COOL:AIR + MODEL:GA110VP_16 **(20/07/2017 - 20/08/2018)** ((MODEL:GA110VP_16 , MODEL:GA75VP_16 , MODEL:GA90VP_16) + MOVOL:575V , (MOVOL:230V , MOVOL:460V) + MODEL:GA110VP_16) + COOL:AIR **(21/08/2018 - 30/12/2027)** ((MODEL:GA110VP_16 , MODEL:GA75VP_16 , MODEL:GA90VP_16) + MOVOL:575V , (MOVOL:230V , MOVOL:460V) + MODEL:GA110VP_16) + COOL:AIR , COOL:WATER + MODEL:GA110VP_16 + MOVOL:460V **(31/12/2027 - ...)**
1060	0301 2335 00	4	WASHER	**(09/03/2017 - 12/07/2017)** COOL:AIR + MODEL:GA110VP_16 + MOVOL:575V **(13/07/2017 - 19/07/2017)** (MOVOL:230V , MOVOL:460V , MOVOL:575V) + COOL:AIR + MODEL:GA110VP_16 **(20/07/2017 - 20/08/2018)** ((MODEL:GA110VP_16 , MODEL:GA75VP_16 , MODEL:GA90VP_16) + MOVOL:575V , (MOVOL:230V , MOVOL:460V) + MODEL:GA110VP_16) + COOL:AIR **(21/08/2018 - 30/12/2027)** ((MODEL:GA110VP_16 , MODEL:GA75VP_16 , MODEL:GA90VP_16) + MOVOL:575V , (MOVOL:230V , MOVOL:460V) + MODEL:GA110VP_16) + COOL:AIR , COOL:WATER + MODEL:GA110VP_16 + MOVOL:460V **(31/12/2027 - ...)**

Legend:

CAPPRM:ASME - Component approval mechanical:ASME
FREQ:60HZ - Frequency:60 Hz
MODEL:GA90VP_16 - Model:GA 90VSD+
MOVOL:575V - Supply voltage:575 V
COOL:AIR - Cooling:Air cooled
MODEL:GA110VP_16 - Model:GA 110VSD+
MOVOL:230V - Supply voltage:230 V
OILTYP:RXD - Oil type:Roto-Xtend Duty Fluid
COOL:WATER - Cooling:Water cooled
MODEL:GA75VP_16 - Model:GA 75VSD+
MOVOL:460V - Supply voltage:460 V

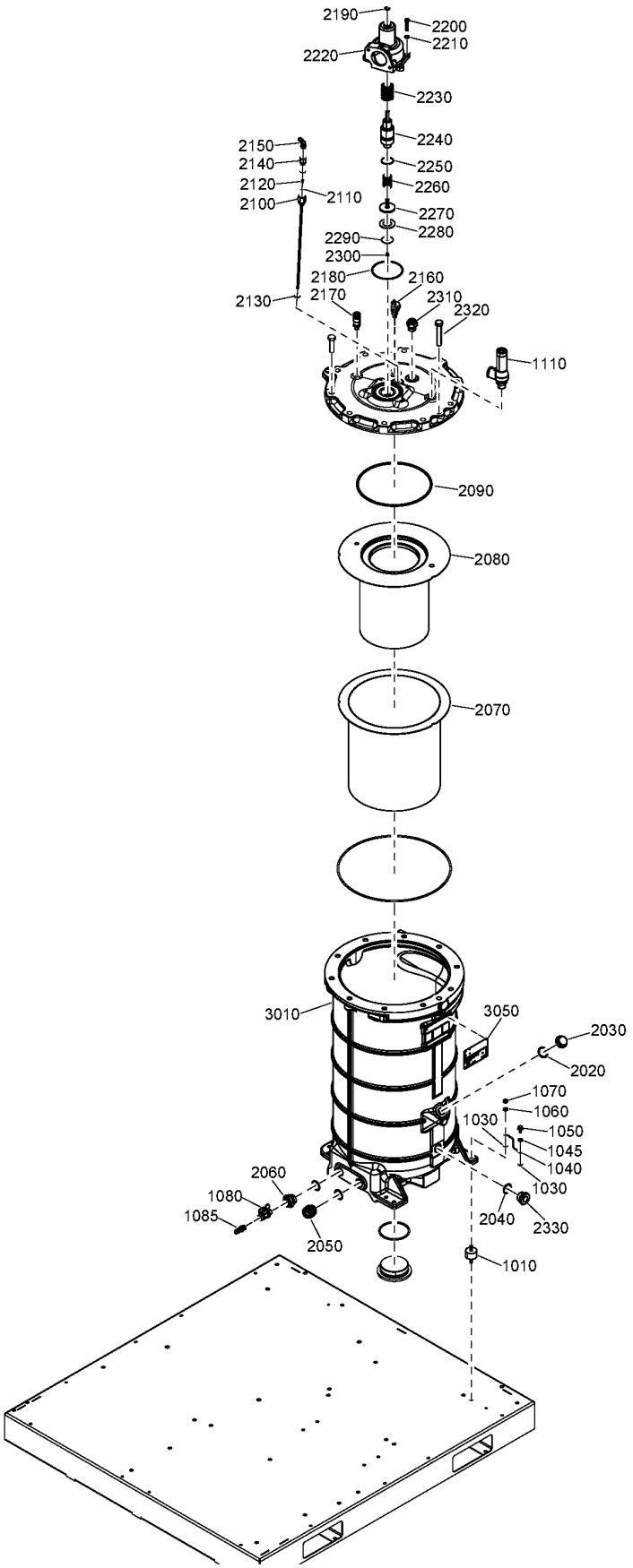
2190
2200
2210
2220
2230
2240
2250
2260
2270
2280
2290
2300
2150
2140
2120
2100
2110
2180
2160
2170
2310
2320
2130
1110
2090
2080
2070
3010
3050
2030
2020
1070
1060
1030
1050
1045
1040
1030
2060
1080
1085
2050
2040
2330
1010

Ref	Part Number	Qty	Name	Validity
1070	0266 2110 00	4	NUT	**(09/03/2017 - 12/07/2017)** COOL:AIR + MODEL:GA110VP_16 + MOVOL:575V **(13/07/2017 - 19/07/2017)** (MOVOL:230V , MOVOL:460V , MOVOL:575V) + COOL:AIR + MODEL:GA110VP_16 **(20/07/2017 - 20/08/2018)** ((MODEL:GA110VP_16 , MODEL:GA75VP_16 , MODEL:GA90VP_16) + MOVOL:575V , (MOVOL:230V , MOVOL:460V) + MODEL:GA110VP_16) + COOL:AIR **(21/08/2018 - 30/12/2027)** ((MODEL:GA110VP_16 , MODEL:GA75VP_16 , MODEL:GA90VP_16) + MOVOL:575V , (MOVOL:230V , MOVOL:460V) + MODEL:GA110VP_16) + COOL:AIR , COOL:WATER + MODEL:GA110VP_16 + MOVOL:460V **(31/12/2027 - ...)**
1080	0852 0011 51	1	BALL VALVE	**(09/03/2017 - 12/07/2017)** COOL:AIR + MODEL:GA110VP_16 + MOVOL:575V **(13/07/2017 - 19/07/2017)** (MOVOL:230V , MOVOL:460V , MOVOL:575V) + COOL:AIR + MODEL:GA110VP_16 **(20/07/2017 - 20/08/2018)** ((MODEL:GA110VP_16 , MODEL:GA75VP_16 , MODEL:GA90VP_16) + MOVOL:575V , (MOVOL:230V , MOVOL:460V) + MODEL:GA110VP_16) + COOL:AIR **(21/08/2018 - 30/12/2027)** ((MODEL:GA110VP_16 , MODEL:GA75VP_16 , MODEL:GA90VP_16) + MOVOL:575V , (MOVOL:230V , MOVOL:460V) + MODEL:GA110VP_16) + COOL:AIR , COOL:WATER + MODEL:GA110VP_16 + MOVOL:460V **(31/12/2027 - ...)**
1085	8202 1251 78	1	QUICK COUPLING	**(02/02/2017 - 12/07/2017)** COOL:AIR + MODEL:GA110VP_16 + MOVOL:575V **(13/07/2017 - 20/08/2018)** ((MODEL:GA110VP_16 , MODEL:GA75VP_16 , MODEL:GA90VP_16) + MOVOL:575V , (MOVOL:230V , MOVOL:460V) + MODEL:GA110VP_16) + COOL:AIR **(21/08/2018 - 30/12/2027)** ((MODEL:GA110VP_16 , MODEL:GA75VP_16 , MODEL:GA90VP_16) + MOVOL:575V , (MOVOL:230V , MOVOL:460V) + MODEL:GA110VP_16) + COOL:AIR , COOL:WATER + MODEL:GA110VP_16 + MOVOL:460V **(31/12/2027 - ...)**
1110	1649 8003 90	1	SAFETY VALVE	**(30/10/2017 - 20/08/2018)** ((MODEL:GA110VP_16 , MODEL:GA75VP_16 , MODEL:GA90VP_16) + MOVOL:575V , (MOVOL:230V , MOVOL:460V) + MODEL:GA110VP_16) + COOL:AIR **(21/08/2018 - 30/12/2027)** ((MODEL:GA110VP_16 , MODEL:GA75VP_16 , MODEL:GA90VP_16) + MOVOL:575V , (MOVOL:230V , MOVOL:460V) + MODEL:GA110VP_16) + COOL:AIR , COOL:WATER + MODEL:GA110VP_16 + MOVOL:460V **(31/12/2027 - ...)**
	1649 8002 88	1	VESSEL ASSEMBLY	**(09/03/2017 - 05/07/2017)** COOL:AIR + MODEL:GA110VP_16 + MOVOL:575V **(06/07/2017 - 12/07/2017)** **(13/07/2017 - 16/01/2018)** (MOVOL:230V , MOVOL:460V) + COOL:AIR + MODEL:GA110VP_16 **(17/01/2018 - 20/08/2018)** ((MODEL:GA110VP_16 , MODEL:GA75VP_16 , MODEL:GA90VP_16) + MOVOL:575V , (MOVOL:230V , MOVOL:460V) + MODEL:GA110VP_16) + COOL:AIR **(21/08/2018 - 15/05/2019)** ((MODEL:GA110VP_16 , MODEL:GA75VP_16 , MODEL:GA90VP_16) + MOVOL:575V , (MOVOL:230V , MOVOL:460V) + MODEL:GA110VP_16) + COOL:AIR , COOL:WATER + MODEL:GA110VP_16 + MOVOL:460V **(16/05/2019 - 30/12/2027)** (COOL:AIR + MOVOL:230V , MOVOL:460V) + MODEL:GA110VP_16 **(31/12/2027 - ...)** MODEL:GA110VP_16 + MOVOL:460V
	1649 8002 92			**(06/07/2017 - 19/07/2017)** COOL:AIR + MODEL:GA110VP_16 + MOVOL:575V **(20/07/2017 - 16/01/2018)** COOL:AIR + MOVOL:575V **(16/05/2019 - ...)** COOL:AIR + MOVOL:575V
2020 •	0663 2102 15	1	O-RING	**(17/01/2020 - ...)** COOL:AIR + MOVOL:575V
2030 •	1202 8992 00	1	PLUG	**(17/01/2020 - ...)** COOL:AIR + MOVOL:575V
2040 •	0663 3130 00	3	O-RING	**(17/01/2020 - ...)** COOL:AIR + MOVOL:575V
2050 •	1625 4290 00	1	NIPPLE	**(17/01/2020 - ...)** COOL:AIR + MOVOL:575V
2060 •	1625 5934 00	1	NIPPLE	**(17/01/2020 - ...)** COOL:AIR + MOVOL:575V
2070 •	~~1649 8001 03~~	1	SHIELD ASSEMBLY	**(17/01/2020 - ...)** COOL:AIR + MOVOL:575V
	Substituted by:	1092 2040 98 - GA75-110VSD+ VESSEL SHIELD (quantity: 1)		
2080 •	1630 1708 01	1	OIL SEPARATOR ELEMENT	**(17/01/2020 - ...)**
2090 •	0663 7170 00	1	O-RING	**(17/01/2020 - ...)** COOL:AIR + MOVOL:575V

Legend:

CAPPRM:ASME - Component approval mechanical:ASME
FREQ:60HZ - Frequency:60 Hz
MODEL:GA90VP_16 - Model:GA 90VSD+
MOVOL:575V - Supply voltage:575 V
COOL:AIR - Cooling:Air cooled
MODEL:GA110VP_16 - Model:GA 110VSD+
MOVOL:230V - Supply voltage:230 V
OILTYP:RXD - Oil type:Roto-Xtend Duty Fluid
COOL:WATER - Cooling:Water cooled
MODEL:GA75VP_16 - Model:GA 75VSD+
MOVOL:460V - Supply voltage:460 V

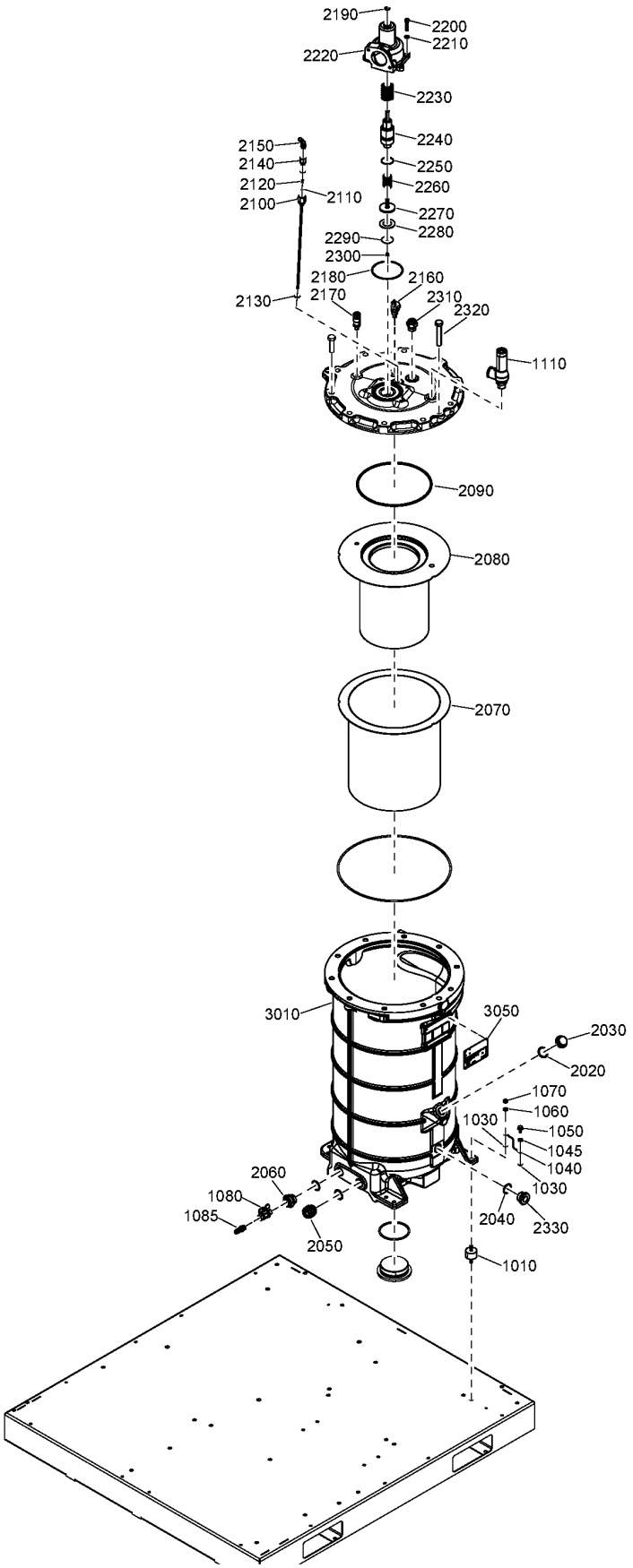
2190
2200
2210
2220
2230
2240
2250
2260
2270
2280
2290
2300
2150
2140
2120
2100
2110
2180
2160
2170
2310
2320
2130
1110
2090
2080
2070
3010
3050
2030
2020
1070
1060
1030
1050
1045
1040
1030
2060
1080
1085
2050
2040
2330
1010

Ref	Part Number	Qty	Name	Validity
2100	• 1649 7001 00	1	SCAVANGE LINE PIPE	**(17/01/2020 - ...)** COOL:AIR + MOVOL:575V
2110	• 0663 2108 11	1	O-RING	**(17/01/2020 - ...)** COOL:AIR + MOVOL:575V
2120	• 1613 9005 01	1	NON RETURN VALVE	**(17/01/2020 - ...)** COOL:AIR + MOVOL:575V
2130	• 0663 3119 00	2	O-RING	**(17/01/2020 - ...)** COOL:AIR + MOVOL:575V
2140	• 1629 0314 25	1	NIPPLE	**(17/01/2020 - ...)** COOL:AIR + MOVOL:575V
2150	• 0583 8121 58	1	ELBOW	**(17/01/2020 - ...)** COOL:AIR + MOVOL:575V
2160	• 1089 0637 29	1	TEMPERATURE SWITCH	**(17/01/2020 - ...)** COOL:AIR + MOVOL:575V
2170	• 1089 9625 16	1	PRESSURE SENSOR	**(17/01/2020 - ...)** COOL:AIR + MOVOL:575V
2180	• 0663 2116 70	1	O-RING	**(17/01/2020 - ...)** COOL:AIR + MOVOL:575V
2190	• 0335 3111 00	1	CIRCLIPS	**(17/01/2020 - ...)** COOL:AIR + MOVOL:575V
2200	• 0211 1328 03	4	SCREW	**(17/01/2020 - ...)** COOL:AIR + MOVOL:575V
2210	• 0301 2335 00	4	WASHER	**(17/01/2020 - ...)** COOL:AIR + MOVOL:575V
2220	• 1625 7277 01	1	HOUSING VALVE	**(17/01/2020 - ...)** COOL:AIR + MOVOL:575V
2230	• 1622 3664 00	1	SPRING	**(17/01/2020 - ...)** COOL:AIR + MOVOL:575V
2240	• 1622 3663 00	1	PISTON	**(17/01/2020 - ...)** COOL:AIR + MOVOL:575V
2250	• 0663 2101 01	1	O-RING	**(17/01/2020 - ...)** COOL:AIR + MOVOL:575V
2260	• 1622 3662 00	1	SPRING	**(17/01/2020 - ...)** COOL:AIR + MOVOL:575V
2270	• 1613 3221 00	1	PISTON VALVE	**(17/01/2020 - ...)** COOL:AIR + MOVOL:575V
2280	• 1613 3223 01	1	WASHER	**(17/01/2020 - ...)** COOL:AIR + MOVOL:575V
2290	• 1613 3222 00	1	WASHER	**(17/01/2020 - ...)** COOL:AIR + MOVOL:575V
2300	• 0147 1244 03	1	HEXAGON BOLT	**(17/01/2020 - ...)** COOL:AIR + MOVOL:575V
2310	• 0580 0017 36	1	NIPPLE	**(17/01/2020 - ...)** COOL:AIR + MOVOL:575V
2320	• 0147 1111 06	1	SCREW	**(17/01/2020 - ...)** COOL:AIR + MOVOL:575V
2330	• 1092 0000 72	1	SIGHT GLASS	**(17/01/2020 - ...)** COOL:AIR + MOVOL:575V
	• 1649 8003 02	1	OIL VESSEL	**(06/07/2017 - 19/07/2017)** COOL:AIR + MODEL:GA110VP_16 + MOVOL:575V **(20/07/2017 - 16/01/2018)** COOL:AIR + MOVOL:575V **(16/05/2019 - ...)** COOL:AIR + MOVOL:575V
	• 1649 8002 98			**(09/03/2017 - 05/07/2017)** COOL:AIR + MODEL:GA110VP_16 + MOVOL:575V **(06/07/2017 - 12/07/2017)** **(13/07/2017 - 16/01/2018)** (MOVOL:230V , MOVOL:460V) + COOL:AIR + MODEL:GA110VP_16 **(17/01/2018 - 20/08/2018)** ((MODEL:GA110VP_16 , MODEL:GA75VP_16 , MODEL:GA90VP_16) + MOVOL:575V , (MOVOL:230V , MOVOL:460V) + MODEL:GA110VP_16) + COOL:AIR **(21/08/2018 - 15/05/2019)** ((MODEL:GA110VP_16 , MODEL:GA75VP_16 , MODEL:GA90VP_16) + MOVOL:575V , (MOVOL:230V , MOVOL:460V) + MODEL:GA110VP_16) + COOL:AIR , COOL:WATER + MODEL:GA110VP_16 + MOVOL:460V **(16/05/2019 - 30/12/2027)** (COOL:AIR + MOVOL:230V , MOVOL:460V) + MODEL:GA110VP_16 **(31/12/2027 - ...)** MODEL:GA110VP_16 + MOVOL:460V
3010	••	1	VESSEL OIL	**(09/03/2017 - 12/07/2017)** COOL:AIR + MODEL:GA110VP_16 + MOVOL:575V **(13/07/2017 - 19/07/2017)** (MOVOL:230V , MOVOL:460V , MOVOL:575V) + COOL:AIR + MODEL:GA110VP_16 **(20/07/2017 - 20/08/2018)** ((MODEL:GA110VP_16 , MODEL:GA75VP_16 , MODEL:GA90VP_16) + MOVOL:575V , (MOVOL:230V , MOVOL:460V) + MODEL:GA110VP_16) + COOL:AIR **(21/08/2018 - 15/05/2019)** ((MODEL:GA110VP_16 , MODEL:GA75VP_16 , MODEL:GA90VP_16) + MOVOL:575V , (MOVOL:230V , MOVOL:460V) + MODEL:GA110VP_16) + COOL:AIR , COOL:WATER + MODEL:GA110VP_16 + MOVOL:460V **(16/05/2019 - 30/12/2027)** (COOL:AIR + MOVOL:230V , MOVOL:460V) + MODEL:GA110VP_16 **(31/12/2027 - ...)** MODEL:GA110VP_16 + MOVOL:460V

Legend:

CAPPRM:ASME - Component approval mechanical:ASME
FREQ:60HZ - Frequency:60 Hz
MODEL:GA90VP_16 - Model:GA 90VSD+
MOVOL:575V - Supply voltage:575 V
COOL:AIR - Cooling:Air cooled
MODEL:GA110VP_16 - Model:GA 110VSD+
MOVOL:230V - Supply voltage:230 V
OILTYP:RXD - Oil type:Roto-Xtend Duty Fluid
COOL:WATER - Cooling:Water cooled
MODEL:GA75VP_16 - Model:GA 75VSD+
MOVOL:460V - Supply voltage:460 V

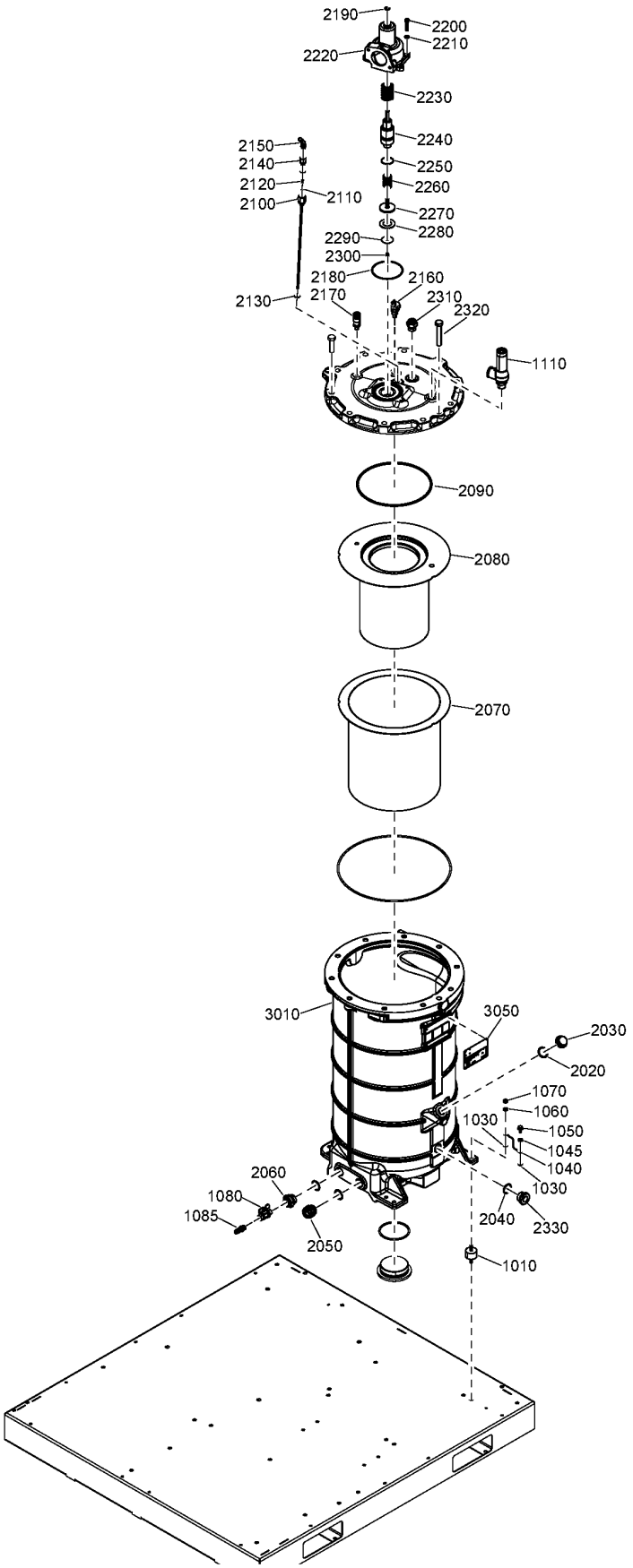
2190
2200
2210
2220
2230
2240
2250
2260
2270
2280
2290
2300
2150
2140
2120
2100
2110
2180
2160
2170
2310
2320
2130
1110
2090
2080
2070
3010
3050
2030
2020
1070
1060
1030
1050
1045
1040
1030
2060
1080
1085
2050
2040
2330
1010

Ref	Part Number	Qty	Name	Validity
3050	••	1	PLATE DATA	**(09/03/2017 - 05/07/2017)** COOL:AIR + MODEL:GA110VP_16 + MOVOL:575V **(06/07/2017 - 12/07/2017)** **(13/07/2017 - 16/01/2018)** (MOVOL:230V , MOVOL:460V) + COOL:AIR + MODEL:GA110VP_16 **(17/01/2018 - 20/08/2018)** ((MODEL:GA110VP_16 , MODEL:GA75VP_16 , MODEL:GA90VP_16) + MOVOL:575V , (MOVOL:230V , MOVOL:460V) + MODEL:GA110VP_16) + COOL:AIR **(21/08/2018 - 15/05/2019)** ((MODEL:GA110VP_16 , MODEL:GA75VP_16 , MODEL:GA90VP_16) + MOVOL:575V , (MOVOL:230V , MOVOL:460V) + MODEL:GA110VP_16) + COOL:AIR , COOL:WATER + MODEL:GA110VP_16 + MOVOL:460V **(16/05/2019 - 30/12/2027)** (COOL:AIR + MOVOL:230V , MOVOL:460V) + MODEL:GA110VP_16 **(31/12/2027 - ...)** MODEL:GA110VP_16 + MOVOL:460V

Legend:

CAPPRM:ASME - Component approval mechanical:ASME
COOL:AIR - Cooling:Air cooled
COOL:WATER - Cooling:Water cooled
FREQ:60HZ - Frequency:60 Hz
MODEL:GA110VP_16 - Model:GA 110VSD+
MODEL:GA75VP_16 - Model:GA 75VSD+
MODEL:GA90VP_16 - Model:GA 90VSD+
MOVOL:230V - Supply voltage:230 V
MOVOL:460V - Supply voltage:460 V
MOVOL:575V - Supply voltage:575 V
OILTYP:RXD - Oil type:Roto-Xtend Duty Fluid

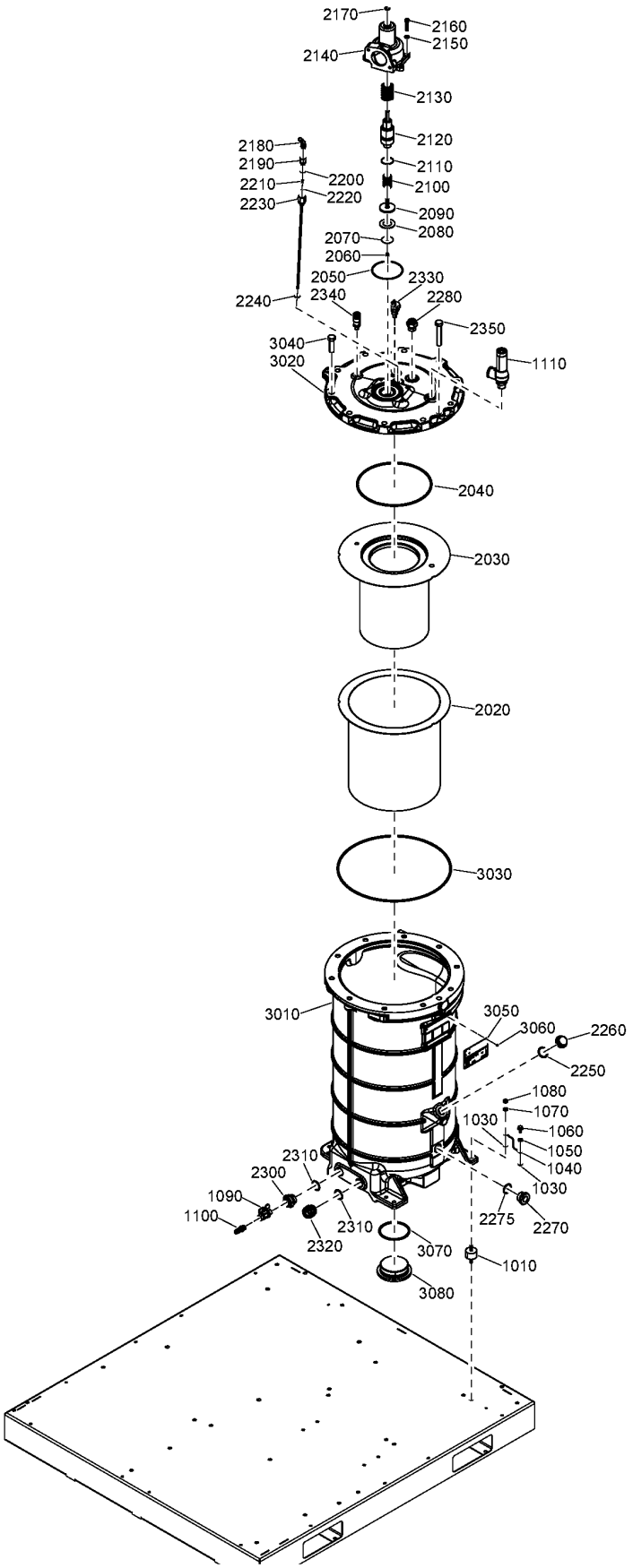
2170
2160
2150
2140
2130
2120
2180
2190
2110
2200
2210
2100
2220
2230
2090
2080
2070
2060
2050
2330
2340
2280
2240
2350
3040
3020
1110
2040
2030
2020
3030
3010
3050
3060
2260
2250
1080
1070
1030
1060
1050
1040
2310
2300
1030
1090
1100
2310
2275
2270
2320
3070
1010
3080

Ref	Part Number	Qty	Name	Validity
1010	1649 8002 87	4	BUFFER	(21/08/2018 - ...)
1030	0333 3227 00	2	WASHER	(21/08/2018 - ...)
1040	1613 8967 12	1	GROUNDING WIRE	(21/08/2018 - ...)
1050	0301 2335 00	1	WASHER	(21/08/2018 - ...)
1060	0226 0301 00	1	TAPPING SCREW	(21/08/2018 - ...)
1070	0301 2335 00	4	WASHER	(21/08/2018 - ...)
1080	0266 2110 00	4	NUT	(21/08/2018 - ...)
1090	0852 0011 51	1	BALL VALVE	(21/08/2018 - ...)
1100	8202 1251 78	1	QUICK COUPLING	(21/08/2018 - ...)
1110	1649 8003 90	1	SAFETY VALVE	(21/08/2018 - ...)
	1649 8002 88	1	VESSEL ASSEMBLY	(21/08/2018 - ...)
2020	• ~~1649 8001 03~~	1	SHIELD ASSEMBLY	
	Substituted by:	1092 2040 98 - GA75-110VSD+ VESSEL SHIELD (quantity: 1)		
2030	• ~~1649 8001 41~~	1	OIL SEPARATOR	
	Substituted by:	1630 1708 01 - SEPARATOR ELEMENT (quantity: 1)		
2040	• 0663 7170 00	1	O-RING	
2050	• 0663 2116 70	1	O-RING	
2060	• 0147 1244 03	1	HEXAGON BOLT	
2070	• 1613 3222 00	1	WASHER	
2080	• 1613 3223 01	1	WASHER	
2090	• 1613 3221 00	1	PISTON VALVE	
2100	• 1622 3662 00	1	SPRING	
2110	• 0663 2101 01	1	O-RING	
2120	• 1622 3663 00	1	PISTON	
2130	• 1622 3664 00	1	SPRING	
2140	• 1625 7277 01	1	HOUSING VALVE	
2150	• 0301 2335 00	4	WASHER	
2160	• 0211 1328 03	4	HEXAGON BOLT	
2170	• 0335 3111 00	1	CIRCLIPS	
2180	• ~~0583 8121 00~~	1	ELBOW	(21/08/2018 - 30/12/2027)
	Substituted by:	0583 8121 58 - ELBOW G1/4 X 6 (quantity: 1)		
2190	• 1629 0314 25	1	NIPPLE	
2200	• 0663 3119 00	1	O-RING	
2210	• 1613 9005 01	1	NON RETURN VALVE	
2220	• 0663 2108 11	1	O-RING	
2230	• ~~1649 8001 04~~	1	SCAVANGE LINE PIPE	(21/08/2018 - 16/01/2020)
	Substituted by:	1649 7001 00 - SCAVANGE LINE PIPE (quantity: 1)		
2230	• 1649 7001 00	1	SCAVANGE LINE PIPE	(17/01/2020 - ...)
2240	• 0663 2113 43	1	O-RING	(21/08/2018 - 16/01/2020)
2240	• 0663 3119 00	1	O-RING	(17/01/2020 - ...)
2250	• 0663 2102 15	1	O-RING	
2260	• 1202 8992 00	1	PLUG	
2270	• 1092 0000 72	1	SIGHT GLASS	
2275	• 0663 3130 00	1	O-RING	
2280	• 0580 0017 36	1	NIPPLE	
2300	• 1625 5934 00	1	NIPPLE	
2310	• 0663 3130 00	2	O-RING	
2320	• 1625 4290 00	1	NIPPLE	
2330	• 1089 0637 29	1	TEMPERATURE SWITCH	
2340	• 1089 9625 16	1	PRESSURE SENSOR	
2350	• 0147 1111 06	1	SCREW	

Legend:

CAPPRM:ASME - Component approval mechanical:ASME
COOL:WATER - Cooling:Water cooled
FREQ:60HZ - Frequency:60 Hz
MODEL:GA110VP_16 - Model:GA 110VSD+
MOVOL:380V - Supply voltage:380 V
MOVOL:460V - Supply voltage:460 V
OILTYP:RIF - Oil type:Roto inject fluid oil

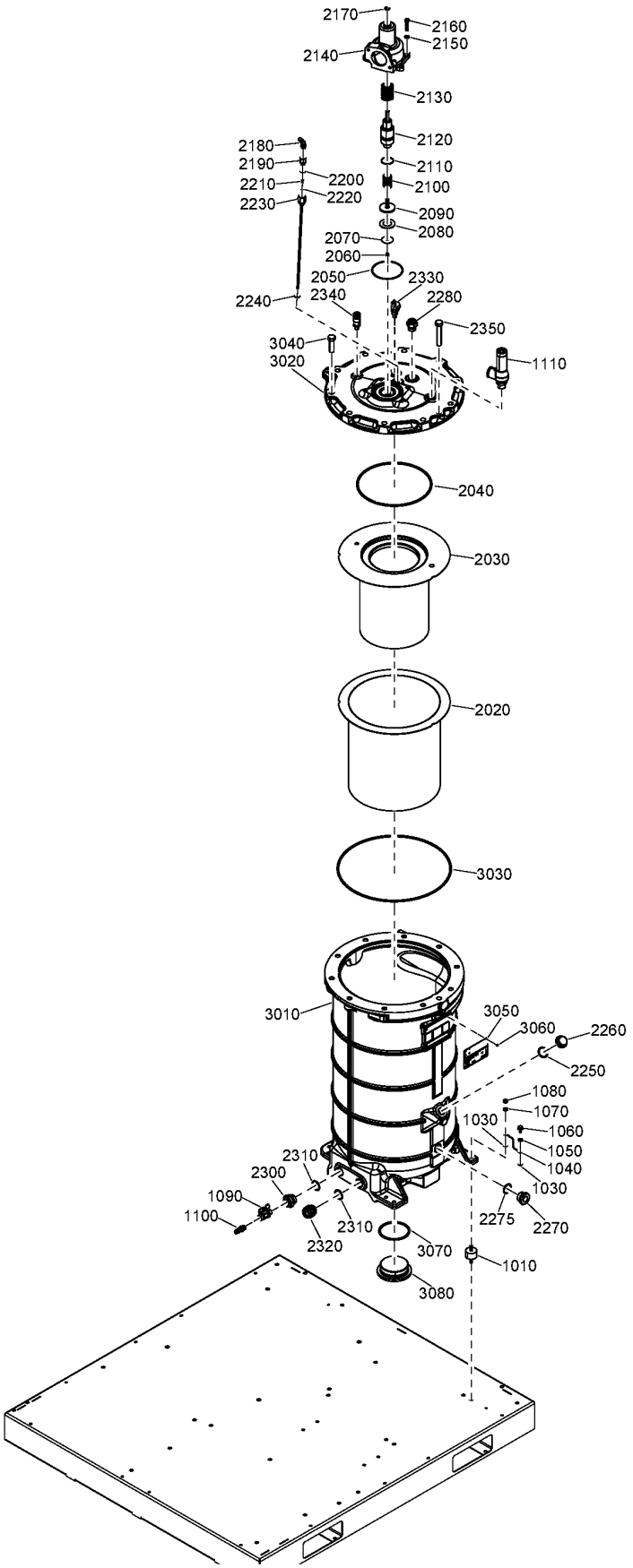
2170
2160
2150
2140
2130
2120
2180
2190
2110
2200
2210
2100
2220
2230
2090
2080
2070
2060
2050
2330
2340
2280
2240
2350
3040
3020
1110
2040
2030
2020
3030
3010
3050
3060
2260
2250
1080
1070
1030
1060
1050
1040
2310
2300
1030
1090
1100
2310
2275
2270
2320
3070
1010
3080

Ref	Part Number	Qty	Name	Validity
	• 1649 8002 98	1	OIL VESSEL	
3010	••	1	VESSEL OIL	
3020	•• 1649 8001 02	1	TOP COVER	
3030	•• 0663 2105 07	1	O-RING	
3040	•• 0147 1107 92	10	HEXAGON BOLT	
3050	••	1	DATA PLATE	
3060	•• 0244 4184 00	4	DRIVE SCREW	
3070	•• 0663 2115 45	1	O-RING	
3080	•• 1625 7620 00	1	PLUG	

Legend:

CAPPRM:ASME - Component approval mechanical:ASME
COOL:WATER - Cooling:Water cooled
FREQ:60HZ - Frequency:60 Hz
MODEL:GA110VP_16 - Model:GA 110VSD+
MOVOL:380V - Supply voltage:380 V
MOVOL:460V - Supply voltage:460 V
OILTYP:RIF - Oil type:Roto inject fluid oil

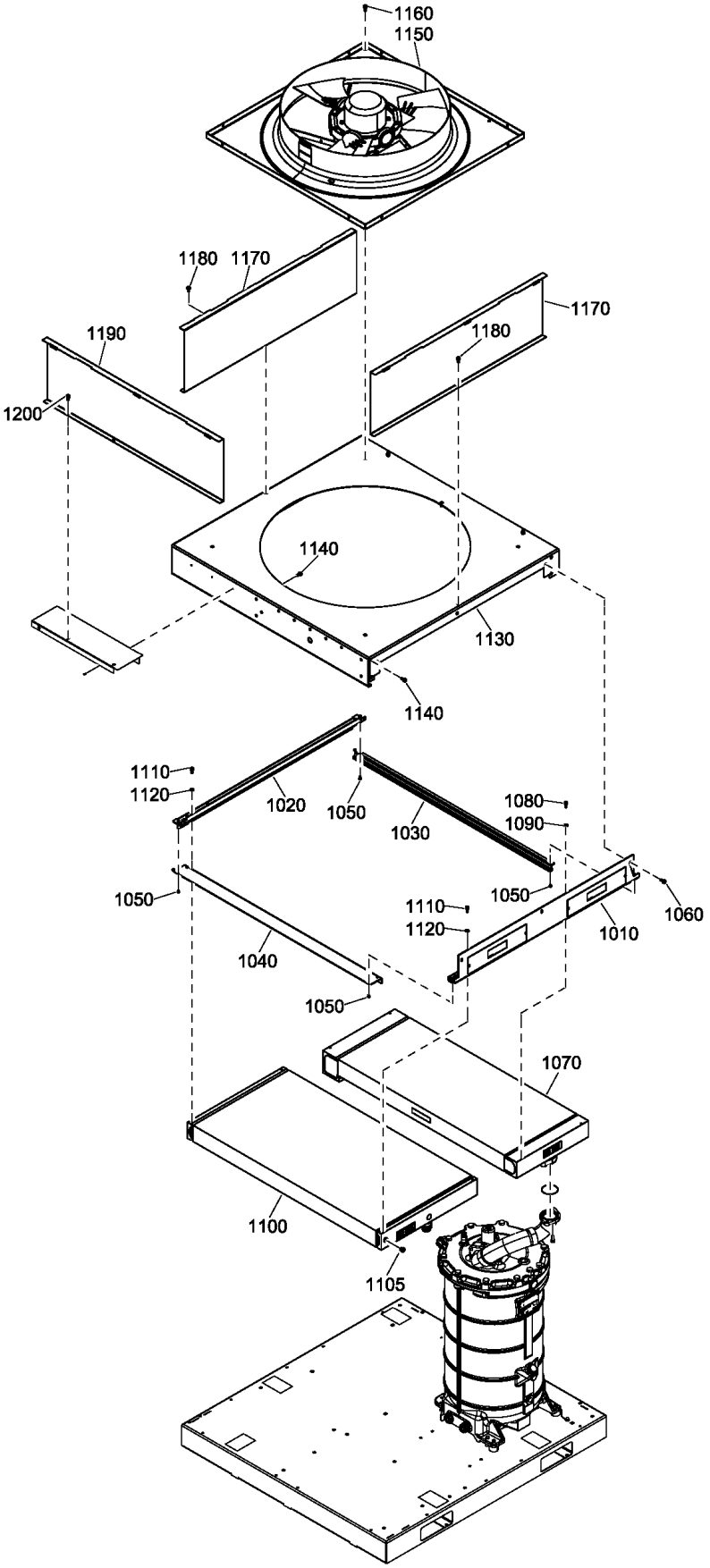
1160
1150
1180
1170
1170
1190
1180
1200
1140
1130
1140
1110
1120
1020
1050
1030
1080
1090
1050
1050
1110
1120
1060
1010
1040
1050
1070
1100
1105

Ref	Part Number	Qty	Name	Validity
1010	1649 8002 76	1	FRONT PLATE	**(20/07/2017 - ...)**
1020	1649 8002 85	1	BACK PLATE	**(20/07/2017 - ...)**
1030	1649 8002 78	1	SIDE PLATE - AFTER COOLER	**(20/07/2017 - ...)** MODEL:GA110VP_16 , MODEL:GA90VP_16
	• 1202 6584 01	1	SEAL	
1030	1649 8002 80	1	SIDE PLATE - AFTER COOLER	**(20/07/2017 - ...)** MODEL:GA75VP_16
	• 1202 6584 01	1	SEAL	
1040	1649 8002 82	1	SIDE PLATE - OIL COOLER	**(20/07/2017 - ...)** MODEL:GA110VP_16
1040	1649 8002 84	1	SIDE PLATE - OIL COOLER	**(20/07/2017 - ...)** MODEL:GA75VP_16
1040	1649 8002 83	1	SIDE PLATE - OIL COOLER	**(20/07/2017 - ...)** MODEL:GA90VP_16
1050	0216 1957 26	6	SCREW	**(20/07/2017 - ...)** MODEL:GA75VP_16 , MODEL:GA90VP_16
1050	0216 1957 26	4	SCREW	**(20/07/2017 - ...)** MODEL:GA110VP_16
1060	0147 1963 08	3	SCREW	**(20/07/2017 - ...)**
1070	1649 8002 03	1	AFTER COOLER	**(20/07/2017 - ...)** MODEL:GA110VP_16 , MODEL:GA90VP_16
1070	1649 8002 01	1	AFTER COOLER	**(20/07/2017 - ...)** MODEL:GA75VP_16
1080	0211 1323 03	4	SCREW	**(20/07/2017 - ...)**
1090	0301 2335 00	4	PLAIN WASHER	**(20/07/2017 - ...)**
1100	1649 8002 04	1	OIL COOLER	**(20/07/2017 - ...)** MODEL:GA110VP_16
	1649 8002 02			**(20/07/2017 - ...)** MODEL:GA90VP_16
	1649 8002 00			**(20/07/2017 - ...)** MODEL:GA75VP_16
1105	• 0686 3718 15	1	PLUG	**(20/07/2017 - ...)** MODEL:GA90VP_16
1110	0211 1323 03	4	SCREW	**(20/07/2017 - ...)**
1120	0301 2335 00	4	PLAIN WASHER	**(20/07/2017 - ...)**
1130	1649 8001 65	1	FAN PLATE	**(20/07/2017 - ...)**
1140	0147 1963 08	8	SCREW	**(20/07/2017 - ...)**
1150	1649 8002 12	1	FAN	**(13/07/2017 - ...)** (MOVOL:200V , MOVOL:400V , MOVOL:500V) + CAPPRE:IEC + FREQ:50HZ + MODEL:GA75VP_16
1150	1649 8002 14	1	FAN	**(13/07/2017 - ...)** (MOVOL:200V , MOVOL:400V , MOVOL:500V) + CAPPRE:IEC + FREQ:50HZ + MODEL:GA110VP_16
1150	1649 8003 53	1	FAN	**(20/07/2017 - ...)** ((MOVOL:200V , MOVOL:380V , MOVOL:460V) + CAPPRE:IEC , (MOVOL:230V , MOVOL:460V , MOVOL:575V) + CAPPRE:ULCUL) + FREQ:60HZ + MODEL:GA110VP_16
1150	1649 8002 13	1	FAN	**(13/07/2017 - ...)** (MOVOL:200V , MOVOL:400V , MOVOL:500V) + CAPPRE:IEC + FREQ:50HZ + MODEL:GA90VP_16
1150	1649 8003 52	1	FAN	**(20/07/2017 - ...)** ((MOVOL:200V , MOVOL:380V , MOVOL:460V) + CAPPRE:IEC , (MOVOL:230V , MOVOL:460V , MOVOL:575V) + CAPPRE:ULCUL) + (MODEL:GA75VP_16 , MODEL:GA90VP_16) + FREQ:60HZ
1160	0147 1963 08	5	SCREW	**(20/07/2017 - ...)**
1170	1649 8003 50	2	FAN PROTECTION PLATE	**(20/07/2017 - 30/12/2027)**
1180	0147 1963 08	2	SCREW	**(20/07/2017 - ...)**
1190	1649 8003 51	1	FAN PROTECTION PLATE	**(20/07/2017 - 30/12/2027)**
1200	0147 1963 08	2	SCREW	**(20/07/2017 - ...)**

Legend:

CAPPRE:IEC - Component approval electrical:IEC
CAPPRE:ULCUL - Component approval electrical:UL/cUL
FREQ:50HZ - Frequency:50 Hz
FREQ:60HZ - Frequency:60 Hz
MODEL:GA110VP_16 - Model:GA 110VSD+
MODEL:GA75VP_16 - Model:GA 75VSD+
MODEL:GA90VP_16 - Model:GA 90VSD+
MOVOL:200V - Supply voltage:200 V
MOVOL:230V - Supply voltage:230 V
MOVOL:380V - Supply voltage:380 V
MOVOL:400V - Supply voltage:400 V
MOVOL:460V - Supply voltage:460 V
MOVOL:500V - Supply voltage:500 V
MOVOL:575V - Supply voltage:575 V

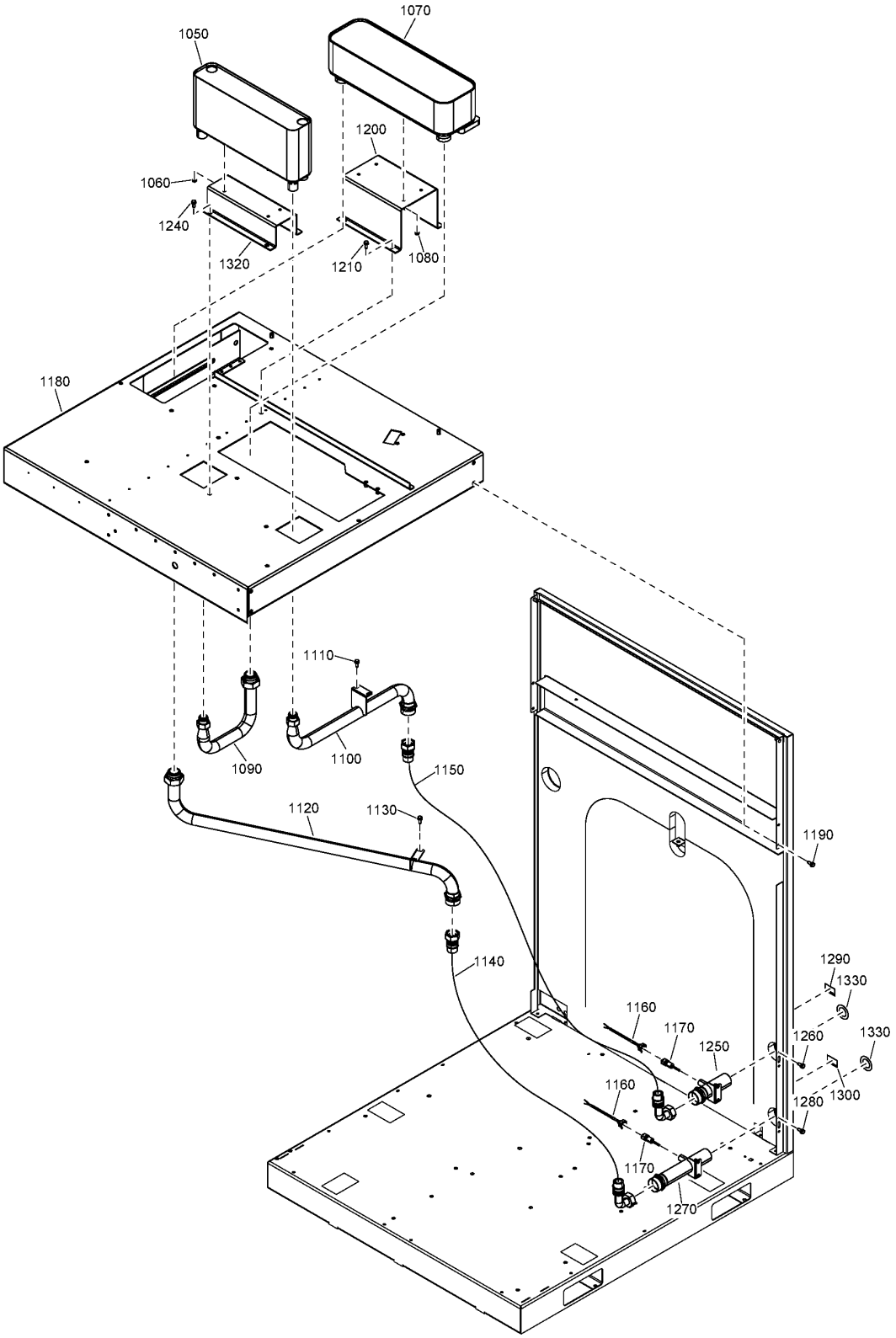
1070
1050
1200
1060
1240
1320
1210
1080
1180
1110
1090
1100
1150
1120
1130
1190
1140
1290
1330
1160
1170
1250
1260
1330
1160
1280
1300
1170
1270

Ref	Part Number	Qty	Name	Validity
1050	1649 8004 48	1	OIL COOLER	(21/08/2018 - ...)
1060	0266 2110 00	3	NUT	(21/08/2018 - ...)
1070	1649 8004 47	1	AFTER COOLER	(21/08/2018 - ...)
1080	0266 2110 00	4	NUT	(21/08/2018 - ...)
1090	1649 8004 52	1	PIPE	(21/08/2018 - ...)
1100	1649 8004 50	1	PIPE	(21/08/2018 - ...)
1110	0147 1963 08	2	HEXAGON BOLT	(21/08/2018 - ...)
1120	1649 8004 49	1	PIPE	(21/08/2018 - ...)
1130	0147 1963 08	2	HEXAGON BOLT	(21/08/2018 - ...)
1140	1649 8004 63	1	FLEXIBLE	(21/08/2018 - ...)
1150	1649 8004 64	1	FLEXIBLE	(21/08/2018 - ...)
1160	~~1622 9961 01~~	2	CABLE TEMPERATURE SENSOR	(21/08/2018 - ...)
	Substituted by:	1622 0663 01 - CABLE TEMP.SENSOR (quantity: 1)		
1170	1089 0708 12	2	THERMOMETER PT1000	(21/08/2018 - ...)
1180	1649 8004 53	1	COOLING PLATE	(21/08/2018 - ...)
1190	0147 1963 08	12	HEXAGON BOLT	(21/08/2018 - ...)
1200	1649 8004 55	1	AFTER COOLER SUPPORT	(21/08/2018 - ...)
1210	0147 1963 08	4	HEXAGON BOLT	(21/08/2018 - ...)
1240	0147 1963 08	3	HEXAGON BOLT	(21/08/2018 - ...)
1250	1649 8004 67	1	PIPE	(21/08/2018 - ...)
1260	0147 1963 08	2	HEXAGON BOLT	(21/08/2018 - ...)
1270	1649 8004 71	1	PIPE	(21/08/2018 - ...)
1280	0147 1963 08	2	HEXAGON BOLT	(21/08/2018 - ...)
1290	1079 9913 79	1	STICKER	(21/08/2018 - ...)
1300	1079 9913 69	1	STICKER	(21/08/2018 - ...)
1320	1649 8004 73	1	OIL COOLER SUPPORT	(21/08/2018 - ...)
1330	1631 1072 00	2	RING SEAL AIR OUTLET	(07/05/2019 - ...)

Legend:
IDRY:N - Integrated dryer:No

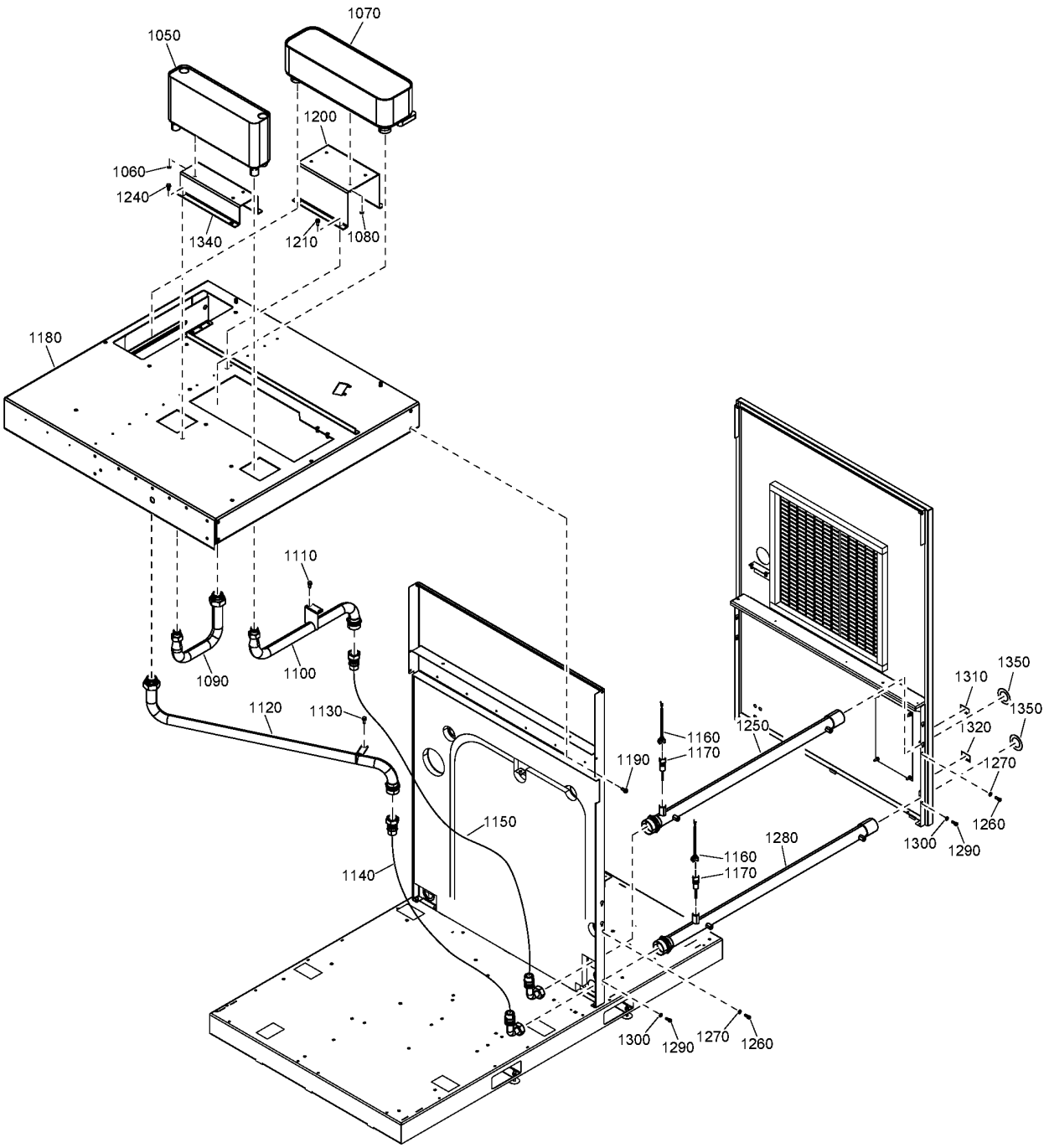
1070
1050
1200
1060
1240
1340
1210
1080
1180
1110
1090
1100
1120
1130
1150
1140
1160
1170
1190
1250
1280
1310
1350
1350
1320
1270
1260
1300
1290
1160
1170
1300
1290
1270
1260

Ref	Part Number	Qty	Name	Validity
1050	1649 8004 48	1	OIL COOLER	(21/08/2018 - ...)
1060	0266 2110 00	3	NUT	(21/08/2018 - ...)
1070	1649 8004 47	1	AFTER COOLER	(21/08/2018 - ...)
1080	0266 2110 00	4	NUT	(21/08/2018 - ...)
1090	1649 8004 52	1	PIPE	(21/08/2018 - ...)
1100	1649 8004 50	1	PIPE	(21/08/2018 - ...)
1110	0147 1963 08	2	HEXAGON BOLT	(21/08/2018 - ...)
1120	1649 8004 49	1	PIPE	(21/08/2018 - ...)
1130	0147 1963 08	2	HEXAGON BOLT	(21/08/2018 - ...)
1140	1649 8004 63	1	FLEXIBLE	(21/08/2018 - ...)
1150	1649 8004 64	1	FLEXIBLE	(21/08/2018 - ...)
1160	~~1622 9961 01~~	2	CABLE TEMPERATURE SENSOR	(21/08/2018 - ...)
	Substituted by:	1622 0663 01 - CABLE TEMP.SENSOR (quantity: 1)		
1170	1089 0708 12	2	THERMOMETER PT1000	(21/08/2018 - ...)
1180	1649 8004 53	1	COOLING PLATE	(21/08/2018 - ...)
1190	0147 1963 08	12	HEXAGON BOLT	(21/08/2018 - ...)
1200	1649 8004 55	1	AFTER COOLER SUPPORT	(21/08/2018 - ...)
1210	0147 1963 08	4	HEXAGON BOLT	(21/08/2018 - ...)
1240	0147 1963 08	3	HEXAGON BOLT	(21/08/2018 - ...)
1250	1649 8004 51	1	PIPE	(21/08/2018 - ...)
1260	0211 1246 03	2	SCREW	(21/08/2018 - ...)
1270	0301 2321 00	2	WASHER	(21/08/2018 - ...)
1280	1649 8004 72	1	PIPE	(21/08/2018 - ...)
1290	0211 1246 03	2	SCREW	(21/08/2018 - ...)
1300	0301 2321 00	2	WASHER	(21/08/2018 - ...)
1310	1079 9913 79	1	STICKER	(21/08/2018 - ...)
1320	1079 9913 69	1	STICKER	(21/08/2018 - ...)
1340	1649 8004 73	1	OIL COOLER SUPPORT	(21/08/2018 - ...)
1350	1631 1072 00	2	SEAL RING	(07/05/2019 - ...)

Legend:
IDRY:Y - Integrated dryer:Yes

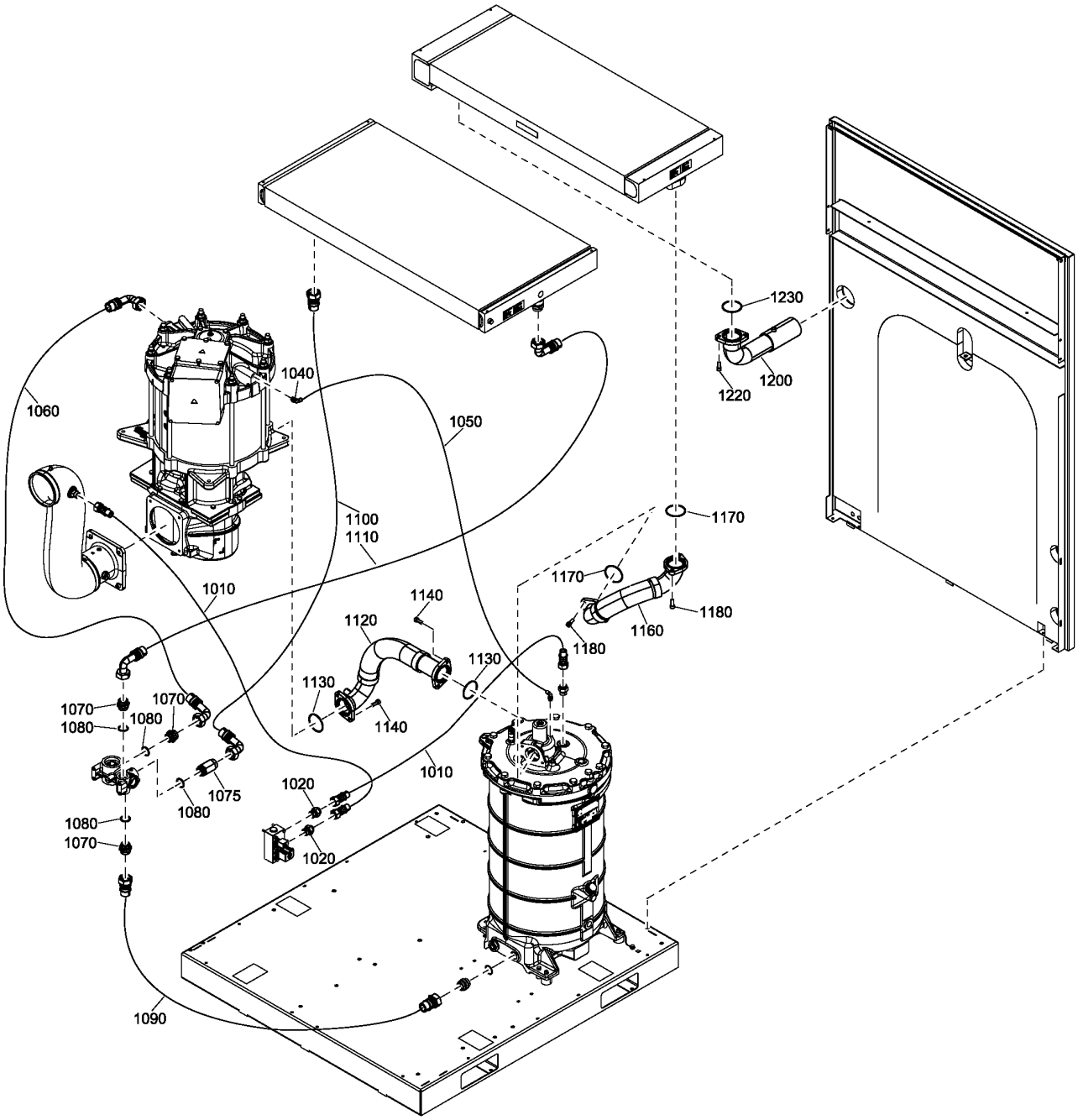
1230
1200
1220
1040
1060
1050
1100
1110
1170
1170
1010
1140
1120
1180
1160
1180
1130
1130
1140
1070
1070
1080
1080
1075
1080
1020
1010
1080
1070
1020
1090

8 - Hoses & Nipples Air-cooled - Pack - 380V-460V/60Hz, 400V/50Hz (02/03/2017 - 05/12/2017)

((MOVOL:380V , MOVOL:460V) + FREQ:60HZ , FREQ:50HZ + MOVOL:400V) + COOL:AIR + IDRY:N

Ref	Part Number	Qty	Name	Validity
1010	1649 8003 40	2	HOSE	**(02/03/2017 - 12/07/2017)** (FREQ:50HZ + MOVOL:400V , FREQ:60HZ + MOVOL:460V) **(13/07/2017 - 05/12/2017)**
1020	0580 0017 36	2	PIPE FITTING	**(20/07/2017 - 05/12/2017)**
1040		1	PIPE FITTING	**(02/03/2017 - 12/07/2017)** (FREQ:50HZ + MOVOL:400V , FREQ:60HZ + MOVOL:460V) **(13/07/2017 - 05/12/2017)**
	Substituted by:	0583 8121 58 - ELBOW G1/4 X 6 (quantity: 1)		
	Service kits:	2901 9901 03 - MOTOR OVERHAUL KIT		
1050	~~0070 6002 68~~	AR	TUBE 4X6	**(02/03/2017 - 12/07/2017)** (FREQ:50HZ + MOVOL:400V , FREQ:60HZ + MOVOL:460V) **(13/07/2017 - 05/12/2017)**
	Substituted by:	0070 7250 04 - TUBE ID4 OD6 BLACK (quantity: 1)		
1060	1625 2073 15	1	HOSE	**(05/05/2017 - 12/07/2017)** (FREQ:50HZ + MOVOL:400V , FREQ:60HZ + MOVOL:460V) **(13/07/2017 - 05/12/2017)**
1070	1625 4290 00	3	NIPPLE	**(06/07/2017 - 12/07/2017)** (FREQ:50HZ + MOVOL:400V , FREQ:60HZ + MOVOL:460V) **(13/07/2017 - 05/12/2017)**
1075	1625 4288 00	1	NIPPLE	**(06/07/2017 - 12/07/2017)** (FREQ:50HZ + MOVOL:400V , FREQ:60HZ + MOVOL:460V) **(13/07/2017 - 05/12/2017)**
1080	0663 3130 00	4	O-RING	**(02/03/2017 - 12/07/2017)** (FREQ:50HZ + MOVOL:400V , FREQ:60HZ + MOVOL:460V) **(13/07/2017 - 05/12/2017)**
1090	1625 2073 01	1	HOSE	**(02/03/2017 - 12/07/2017)** (FREQ:50HZ + MOVOL:400V , FREQ:60HZ + MOVOL:460V) **(13/07/2017 - 05/12/2017)**
1100	1625 2073 17	1	HOSE	**(05/05/2017 - 12/07/2017)** (FREQ:50HZ + MOVOL:400V , FREQ:60HZ + MOVOL:460V) **(13/07/2017 - 05/12/2017)**
1110	1625 2073 16	1	HOSE	**(05/05/2017 - 12/07/2017)** (FREQ:50HZ + MOVOL:400V , FREQ:60HZ + MOVOL:460V) **(13/07/2017 - 05/12/2017)**
1120	1649 8001 80	1	PIPE	**(02/03/2017 - 12/07/2017)** (FREQ:50HZ + MOVOL:400V , FREQ:60HZ + MOVOL:460V) **(13/07/2017 - 05/12/2017)**
1130		2	O-RING	**(02/03/2017 - 12/07/2017)** (FREQ:50HZ + MOVOL:400V , FREQ:60HZ + MOVOL:460V) **(13/07/2017 - 05/12/2017)**
	Service kits:	2901 9901 03 - MOTOR OVERHAUL KIT		
1140	0211 1363 03	4	SCREW	**(02/03/2017 - 12/07/2017)** (FREQ:50HZ + MOVOL:400V , FREQ:60HZ + MOVOL:460V) **(13/07/2017 - 05/12/2017)**
1160	1649 8001 82	1	PIPE	**(02/03/2017 - 12/07/2017)** (FREQ:50HZ + MOVOL:400V , FREQ:60HZ + MOVOL:460V) **(13/07/2017 - 05/12/2017)**
1170		2	O-RING	**(02/03/2017 - 12/07/2017)** (FREQ:50HZ + MOVOL:400V , FREQ:60HZ + MOVOL:460V) **(13/07/2017 - 05/12/2017)**
	Service kits:	2901 9901 03 - MOTOR OVERHAUL KIT		
1180	0211 1363 03	4	SCREW	**(02/03/2017 - 12/07/2017)** (FREQ:50HZ + MOVOL:400V , FREQ:60HZ + MOVOL:460V) **(13/07/2017 - 05/12/2017)**
1200	1649 8001 42	1	PIPE	**(02/03/2017 - 12/07/2017)** (FREQ:50HZ + MOVOL:400V , FREQ:60HZ + MOVOL:460V) **(13/07/2017 - 05/12/2017)**
1220	0211 1363 03	2	SCREW	**(02/03/2017 - 12/07/2017)** (FREQ:50HZ + MOVOL:400V , FREQ:60HZ + MOVOL:460V) **(13/07/2017 - 05/12/2017)**
1230		1	O-RING	**(02/03/2017 - 12/07/2017)** (FREQ:50HZ + MOVOL:400V , FREQ:60HZ + MOVOL:460V) **(13/07/2017 - 05/12/2017)**
	Service kits:	2901 9901 03 - MOTOR OVERHAUL KIT		

Legend:

COOL:AIR - Cooling:Air cooled
IDRY:N - Integrated dryer:No
MOVOL:460V - Supply voltage:460 V
FREQ:50HZ - Frequency:50 Hz
MOVOL:380V - Supply voltage:380 V
FREQ:60HZ - Frequency:60 Hz
MOVOL:400V - Supply voltage:400 V

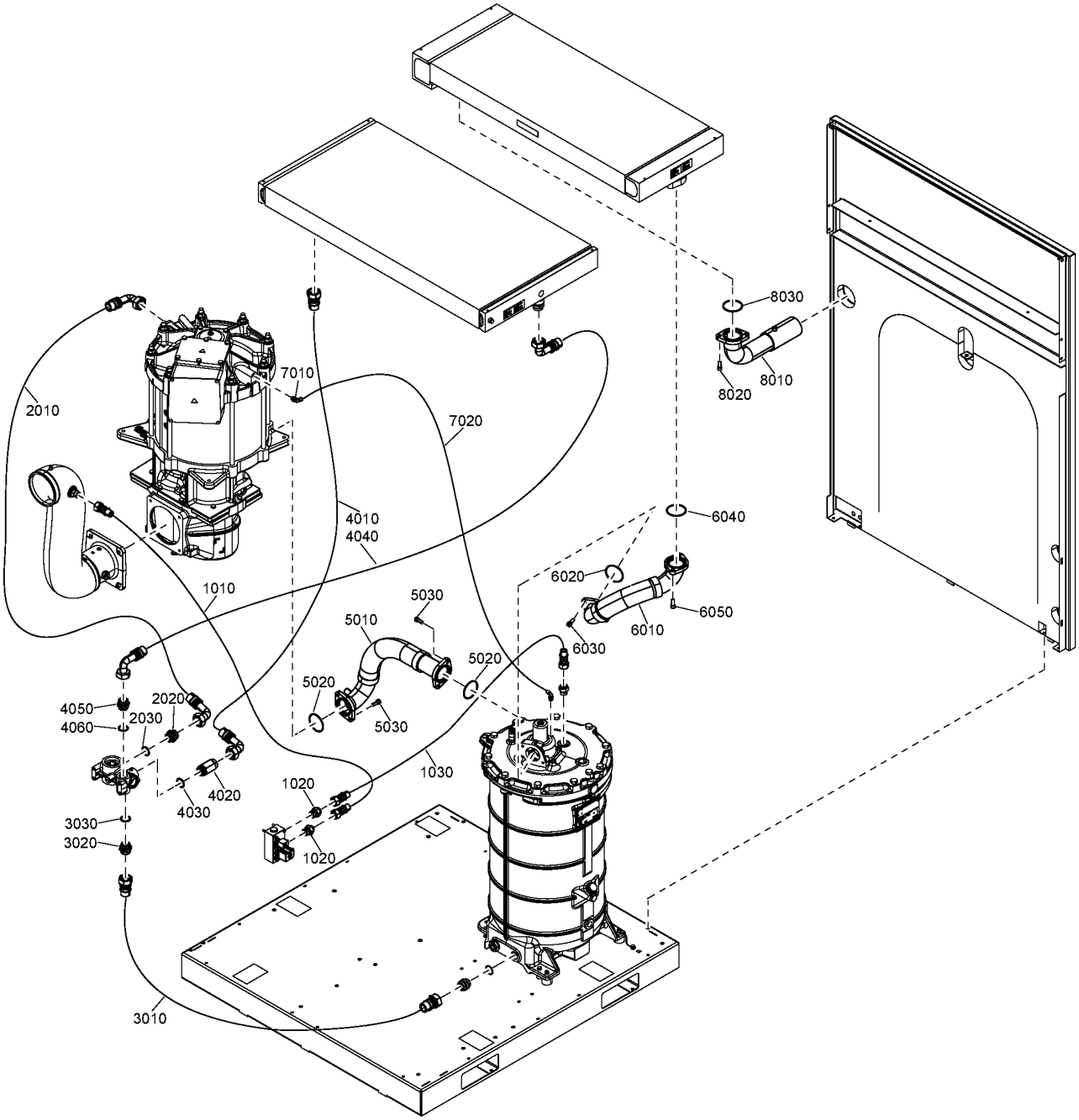
8030
8010
8020
7010
2010
7020
4010
4040
6040
6020
6050
6010
6030
1010
5030
5010
5020
5020
5030
4050
4060
2020
2030
4020
4030
1020
1030
3030
3020
1020
3010

9 - Hoses & Nipples Air-cooled - Pack - 380V-460V/60Hz, 400V/50Hz (06/12/2017 - ...)

((MOVOL:380V , MOVOL:460V) + FREQ:60HZ , FREQ:50HZ + MOVOL:400V) + COOL:AIR + IDRY:N

Ref	Part Number	Qty	Name	Validity
1010	1649 8003 40	1	HOSE	**(19/04/2018 - 20/08/2018)** ((MOVOL:200V , MOVOL:230V , MOVOL:380V , MOVOL:460V , MOVOL:575V) + FREQ:60HZ , (MOVOL:200V , MOVOL:400V , MOVOL:500V) + FREQ:50HZ) **(21/08/2018 - ...)** ((MOVOL:200V , MOVOL:230V , MOVOL:575V) + COOL:AIR , MOVOL:380V , MOVOL:460V) + FREQ:60HZ , ((MOVOL:200V , MOVOL:500V) + COOL:AIR , MOVOL:400V) + FREQ:50HZ
1020	0580 0017 36	2	NIPPLE	**(06/12/2017 - 20/08/2018)** ((MOVOL:200V , MOVOL:230V , MOVOL:380V , MOVOL:460V , MOVOL:575V) + FREQ:60HZ , (MOVOL:200V , MOVOL:400V , MOVOL:500V) + FREQ:50HZ) **(21/08/2018 - ...)** ((MOVOL:200V , MOVOL:230V , MOVOL:575V) + COOL:AIR , MOVOL:380V , MOVOL:460V) + FREQ:60HZ , ((MOVOL:200V , MOVOL:500V) + COOL:AIR , MOVOL:400V) + FREQ:50HZ
1030	1649 8003 40	1	HOSE	**(19/04/2018 - 20/08/2018)** ((MOVOL:200V , MOVOL:230V , MOVOL:380V , MOVOL:460V , MOVOL:575V) + FREQ:60HZ , (MOVOL:200V , MOVOL:400V , MOVOL:500V) + FREQ:50HZ) **(21/08/2018 - ...)** ((MOVOL:200V , MOVOL:230V , MOVOL:575V) + COOL:AIR , MOVOL:380V , MOVOL:460V) + FREQ:60HZ , ((MOVOL:200V , MOVOL:500V) + COOL:AIR , MOVOL:400V) + FREQ:50HZ
2010	1625 2073 15	1	HOSE	**(06/12/2017 - 20/08/2018)** ((MOVOL:200V , MOVOL:230V , MOVOL:380V , MOVOL:460V , MOVOL:575V) + FREQ:60HZ , (MOVOL:200V , MOVOL:400V , MOVOL:500V) + FREQ:50HZ) **(21/08/2018 - ...)** ((MOVOL:200V , MOVOL:230V , MOVOL:575V) + COOL:AIR , MOVOL:380V , MOVOL:460V) + FREQ:60HZ , ((MOVOL:200V , MOVOL:500V) + COOL:AIR , MOVOL:400V) + FREQ:50HZ
2020	1625 4290 00	1	NIPPLE	**(06/12/2017 - 20/08/2018)** ((MOVOL:200V , MOVOL:230V , MOVOL:380V , MOVOL:460V , MOVOL:575V) + FREQ:60HZ , (MOVOL:200V , MOVOL:400V , MOVOL:500V) + FREQ:50HZ) **(21/08/2018 - ...)** ((MOVOL:200V , MOVOL:230V , MOVOL:575V) + COOL:AIR , MOVOL:380V , MOVOL:460V) + FREQ:60HZ , ((MOVOL:200V , MOVOL:500V) + COOL:AIR , MOVOL:400V) + FREQ:50HZ
2030	0663 3130 00	1	O-RING	**(06/12/2017 - 20/08/2018)** ((MOVOL:200V , MOVOL:230V , MOVOL:380V , MOVOL:460V , MOVOL:575V) + FREQ:60HZ , (MOVOL:200V , MOVOL:400V , MOVOL:500V) + FREQ:50HZ) **(21/08/2018 - ...)** ((MOVOL:200V , MOVOL:230V , MOVOL:575V) + COOL:AIR , MOVOL:380V , MOVOL:460V) + FREQ:60HZ , ((MOVOL:200V , MOVOL:500V) + COOL:AIR , MOVOL:400V) + FREQ:50HZ
3010	1625 2073 01	1	HOSE	**(06/12/2017 - 20/08/2018)** ((MOVOL:200V , MOVOL:230V , MOVOL:380V , MOVOL:460V , MOVOL:575V) + FREQ:60HZ , (MOVOL:200V , MOVOL:400V , MOVOL:500V) + FREQ:50HZ) **(21/08/2018 - ...)** ((MOVOL:200V , MOVOL:230V , MOVOL:575V) + COOL:AIR , MOVOL:380V , MOVOL:460V) + FREQ:60HZ , ((MOVOL:200V , MOVOL:500V) + COOL:AIR , MOVOL:400V) + FREQ:50HZ
3020	1625 4290 00	1	NIPPLE	**(06/12/2017 - 20/08/2018)** ((MOVOL:200V , MOVOL:230V , MOVOL:380V , MOVOL:460V , MOVOL:575V) + FREQ:60HZ , (MOVOL:200V , MOVOL:400V , MOVOL:500V) + FREQ:50HZ) **(21/08/2018 - ...)** ((MOVOL:200V , MOVOL:230V , MOVOL:575V) + COOL:AIR , MOVOL:380V , MOVOL:460V) + FREQ:60HZ , ((MOVOL:200V , MOVOL:500V) + COOL:AIR , MOVOL:400V) + FREQ:50HZ
3030	0663 3130 00	1	O-RING	**(06/12/2017 - 20/08/2018)** ((MOVOL:200V , MOVOL:230V , MOVOL:380V , MOVOL:460V , MOVOL:575V) + FREQ:60HZ , (MOVOL:200V , MOVOL:400V , MOVOL:500V) + FREQ:50HZ) **(21/08/2018 - ...)** ((MOVOL:200V , MOVOL:230V , MOVOL:575V) + COOL:AIR , MOVOL:380V , MOVOL:460V) + FREQ:60HZ , ((MOVOL:200V , MOVOL:500V) + COOL:AIR , MOVOL:400V) + FREQ:50HZ
4010	1625 2073 17	1	HOSE	**(06/12/2017 - ...)** ((MOVOL:200V , MOVOL:230V , MOVOL:380V , MOVOL:460V , MOVOL:575V) + FREQ:60HZ , (MOVOL:200V , MOVOL:400V , MOVOL:500V) + FREQ:50HZ)
4020	1625 4288 00	1	NIPPLE	**(06/12/2017 - ...)** ((MOVOL:200V , MOVOL:230V , MOVOL:380V , MOVOL:460V , MOVOL:575V) + FREQ:60HZ , (MOVOL:200V , MOVOL:400V , MOVOL:500V) + FREQ:50HZ)
4030	0663 3130 00	1	O-RING	**(06/12/2017 - ...)** ((MOVOL:200V , MOVOL:230V , MOVOL:380V , MOVOL:460V , MOVOL:575V) + FREQ:60HZ , (MOVOL:200V , MOVOL:400V , MOVOL:500V) + FREQ:50HZ)

Legend:

COOL:AIR - Cooling:Air cooled
IDRY:N - Integrated dryer:No
MOVOL:380V - Supply voltage:380 V
MOVOL:500V - Supply voltage:500 V
FREQ:50HZ - Frequency:50 Hz
MOVOL:200V - Supply voltage:200 V
MOVOL:400V - Supply voltage:400 V
MOVOL:575V - Supply voltage:575 V
FREQ:60HZ - Frequency:60 Hz
MOVOL:230V - Supply voltage:230 V
MOVOL:460V - Supply voltage:460 V

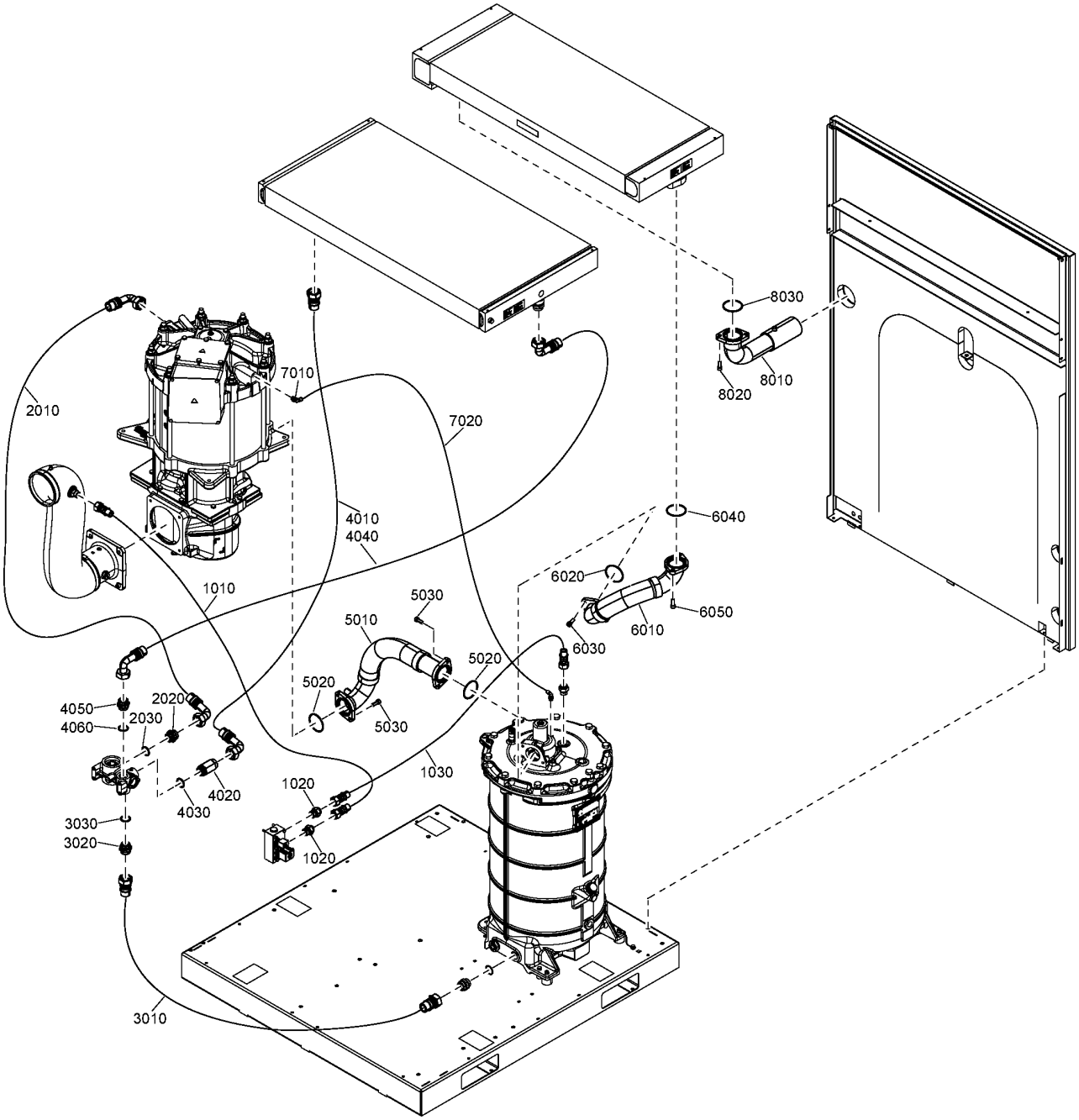
8030
8010
8020
7010
2010
7020
4010
4040
6040
6020
6050
6010
6030
1010
5030
5010
5020
5020
5030
4050
4060
2020
2030
4020
4030
1020
1030
3030
3020
1020
3010

Ref	Part Number	Qty	Name	Validity
4040	1625 2073 16	1	HOSE	**(06/12/2017 - ...)** ((MOVOL:200V , MOVOL:230V , MOVOL:380V , MOVOL:460V , MOVOL:575V) + FREQ:60HZ , (MOVOL:200V , MOVOL:400V , MOVOL:500V) + FREQ:50HZ)
4050	1625 4290 00	1	NIPPLE	**(06/12/2017 - ...)** ((MOVOL:200V , MOVOL:230V , MOVOL:380V , MOVOL:460V , MOVOL:575V) + FREQ:60HZ , (MOVOL:200V , MOVOL:400V , MOVOL:500V) + FREQ:50HZ)
4060	0663 3130 00	1	O-RING	**(06/12/2017 - ...)** ((MOVOL:200V , MOVOL:230V , MOVOL:380V , MOVOL:460V , MOVOL:575V) + FREQ:60HZ , (MOVOL:200V , MOVOL:400V , MOVOL:500V) + FREQ:50HZ)
5010	1649 8001 80	1	HOSE	**(06/12/2017 - 20/08/2018)** ((MOVOL:200V , MOVOL:230V , MOVOL:380V , MOVOL:460V , MOVOL:575V) + FREQ:60HZ , (MOVOL:200V , MOVOL:400V , MOVOL:500V) + FREQ:50HZ) **(21/08/2018 - ...)** ((MOVOL:200V , MOVOL:230V , MOVOL:575V) + COOL:AIR , MOVOL:380V , MOVOL:460V) + FREQ:60HZ , ((MOVOL:200V , MOVOL:500V) + COOL:AIR , MOVOL:400V) + FREQ:50HZ
5020	0663 7138 00	2	O-RING	**(06/12/2017 - 20/08/2018)** ((MOVOL:200V , MOVOL:230V , MOVOL:380V , MOVOL:460V , MOVOL:575V) + FREQ:60HZ , (MOVOL:200V , MOVOL:400V , MOVOL:500V) + FREQ:50HZ) **(21/08/2018 - ...)** ((MOVOL:200V , MOVOL:230V , MOVOL:575V) + COOL:AIR , MOVOL:380V , MOVOL:460V) + FREQ:60HZ , ((MOVOL:200V , MOVOL:500V) + COOL:AIR , MOVOL:400V) + FREQ:50HZ
5030	0211 1363 03	4	SCREW	**(06/12/2017 - 20/08/2018)** ((MOVOL:200V , MOVOL:230V , MOVOL:380V , MOVOL:460V , MOVOL:575V) + FREQ:60HZ , (MOVOL:200V , MOVOL:400V , MOVOL:500V) + FREQ:50HZ) **(21/08/2018 - ...)** ((MOVOL:200V , MOVOL:230V , MOVOL:575V) + COOL:AIR , MOVOL:380V , MOVOL:460V) + FREQ:60HZ , ((MOVOL:200V , MOVOL:500V) + COOL:AIR , MOVOL:400V) + FREQ:50HZ
6010	1649 8001 82	1	HOSE	**(06/12/2017 - ...)** ((MOVOL:200V , MOVOL:230V , MOVOL:380V , MOVOL:460V , MOVOL:575V) + FREQ:60HZ , (MOVOL:200V , MOVOL:400V , MOVOL:500V) + FREQ:50HZ)
6020	0663 7138 00	1	O-RING	**(19/04/2018 - ...)** ((MOVOL:200V , MOVOL:230V , MOVOL:380V , MOVOL:460V , MOVOL:575V) + FREQ:60HZ , (MOVOL:200V , MOVOL:400V , MOVOL:500V) + FREQ:50HZ)
6030	0211 1363 03	2	SCREW	**(19/04/2018 - ...)** ((MOVOL:200V , MOVOL:230V , MOVOL:380V , MOVOL:460V , MOVOL:575V) + FREQ:60HZ , (MOVOL:200V , MOVOL:400V , MOVOL:500V) + FREQ:50HZ)
6040	0663 7138 00	1	O-RING	**(19/04/2018 - ...)** ((MOVOL:200V , MOVOL:230V , MOVOL:380V , MOVOL:460V , MOVOL:575V) + FREQ:60HZ , (MOVOL:200V , MOVOL:400V , MOVOL:500V) + FREQ:50HZ)
6050	0211 1363 03	2	SCREW	**(19/04/2018 - ...)** ((MOVOL:200V , MOVOL:230V , MOVOL:380V , MOVOL:460V , MOVOL:575V) + FREQ:60HZ , (MOVOL:200V , MOVOL:400V , MOVOL:500V) + FREQ:50HZ)
7010	~~0583 8121 00~~	1	ELBOW	**(06/12/2017 - 20/08/2018)** ((MOVOL:200V , MOVOL:230V , MOVOL:380V , MOVOL:460V , MOVOL:575V) + FREQ:60HZ , (MOVOL:200V , MOVOL:400V , MOVOL:500V) + FREQ:50HZ) **(21/08/2018 - 30/12/2027)** ((MOVOL:200V , MOVOL:230V , MOVOL:575V) + COOL:AIR , MOVOL:380V , MOVOL:460V) + FREQ:60HZ , ((MOVOL:200V , MOVOL:500V) + COOL:AIR , MOVOL:400V) + FREQ:50HZ
	Substituted by:	0583 8121 58 - ELBOW G1/4 X 6 (quantity: 1)		
7020	~~0070 6002 68~~	AR	TUBE 4X6	**(06/12/2017 - 20/08/2018)** ((MOVOL:200V , MOVOL:230V , MOVOL:380V , MOVOL:460V , MOVOL:575V) + FREQ:60HZ , (MOVOL:200V , MOVOL:400V , MOVOL:500V) + FREQ:50HZ) **(21/08/2018 - ...)** ((MOVOL:200V , MOVOL:230V , MOVOL:575V) + COOL:AIR , MOVOL:380V , MOVOL:460V) + FREQ:60HZ , ((MOVOL:200V , MOVOL:500V) + COOL:AIR , MOVOL:400V) + FREQ:50HZ
	Substituted by:	0070 7250 04 - TUBE ID4 OD6 BLACK (quantity: 1)		
8010	1649 8001 42	1	PIPE	**(06/12/2017 - ...)**
8020	0211 1363 03	2	SCREW	**(06/12/2017 - ...)**
8030	0663 7138 00	1	O-RING	**(06/12/2017 - ...)**

Legend:

COOL:AIR - Cooling:Air cooled
IDRY:N - Integrated dryer:No
MOVOL:380V - Supply voltage:380 V
MOVOL:500V - Supply voltage:500 V
FREQ:50HZ - Frequency:50 Hz
MOVOL:200V - Supply voltage:200 V
MOVOL:400V - Supply voltage:400 V
MOVOL:575V - Supply voltage:575 V
FREQ:60HZ - Frequency:60 Hz
MOVOL:230V - Supply voltage:230 V
MOVOL:460V - Supply voltage:460 V

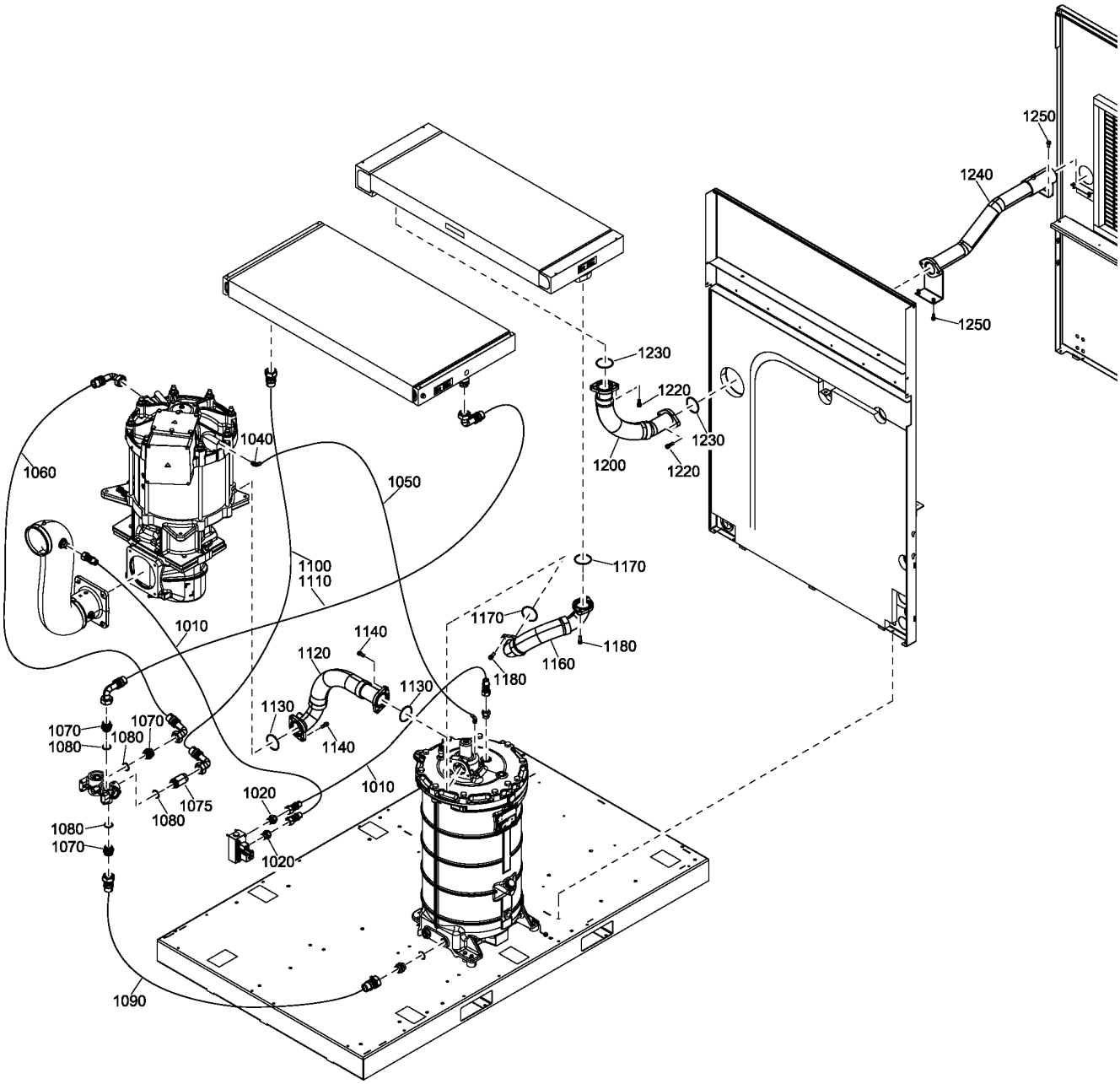
1250
1240
1250
1230
1220
1230
1200
1220
1040
1060
1050
1100
1110
1170
1170
1180
1160
1180
1140
1120
1130
1130
1140
1010
1010
1070
1070
1080
1080
1075
1080
1080
1070
1020
1020
1090

10 - Hoses & Nipples Air-cooled - Pack Trafo - (200V-230V-575V/60Hz, 200V-500V/50Hz) (20/07/2017 - 05/12/2017)

((MOVOL:200V , MOVOL:230V , MOVOL:575V) + FREQ:60HZ , (MOVOL:200V , MOVOL:500V) + FREQ:50HZ) + COOL:AIR + IDRY:N

Ref	Part Number	Qty	Name	Validity
1010	1649 8003 40	2	HOSE	(20/07/2017 - 05/12/2017)
1020	0580 0017 36	2	PIPE FITTING	(20/07/2017 - 05/12/2017)
1040		1	PIPE FITTING	(20/07/2017 - 05/12/2017)
	Substituted by:	0583 8121 58 - ELBOW G1/4 X 6 (quantity: 1)		
	Service kits:	2901 9901 03 - MOTOR OVERHAUL KIT		
1050	~~0070 6002 68~~	5	TUBE	(20/07/2017 - 05/12/2017)
	Substituted by:	0070 7250 04 - TUBE ID4 OD6 BLACK (quantity: 1)		
1060	1625 2073 15	1	HOSE	(20/07/2017 - 05/12/2017)
1070	1625 4290 00	3	NIPPLE	(20/07/2017 - 05/12/2017)
1075	1625 4288 00	1	NIPPLE	(20/07/2017 - 05/12/2017)
1080	0663 3130 00	4	O-RING	(20/07/2017 - 05/12/2017)
1090	1625 2073 01	1	HOSE	(20/07/2017 - 05/12/2017)
1100	1625 2073 17	1	HOSE	(20/07/2017 - 05/12/2017)
1110	1625 2073 16	1	HOSE	(20/07/2017 - 05/12/2017)
1120	1649 8001 80	1	HOSE	(20/07/2017 - 05/12/2017)
1130		2	O-RING	(20/07/2017 - 05/12/2017)
	Service kits:	2901 9901 03 - MOTOR OVERHAUL KIT		
1140	0211 1363 03	4	SCREW	(20/07/2017 - 05/12/2017)
1160	1649 8001 82	1	PIPE	(20/07/2017 - 05/12/2017)
1170		2	O-RING	(20/07/2017 - 05/12/2017)
	Service kits:	2901 9901 03 - MOTOR OVERHAUL KIT		
1180	0211 1363 03	4	SCREW	(20/07/2017 - 05/12/2017)
1200	1649 8001 78	1	PIPE	(20/07/2017 - 05/12/2017)
1220	0211 1363 03	4	SCREW	(20/07/2017 - 05/12/2017)
1230		2	O-RING	(20/07/2017 - 05/12/2017)
	Service kits:	2901 9901 03 - MOTOR OVERHAUL KIT		
1240	1649 8003 26	1	PIPE	(20/07/2017 - 05/12/2017)
1250	0147 1963 08	4	SCREW	(20/07/2017 - 05/12/2017)

Legend:

COOL:AIR - Cooling:Air cooled
FREQ:50HZ - Frequency:50 Hz
FREQ:60HZ - Frequency:60 Hz
IDRY:N - Integrated dryer:No
MOVOL:200V - Supply voltage:200 V
MOVOL:230V - Supply voltage:230 V
MOVOL:500V - Supply voltage:500 V
MOVOL:575V - Supply voltage:575 V

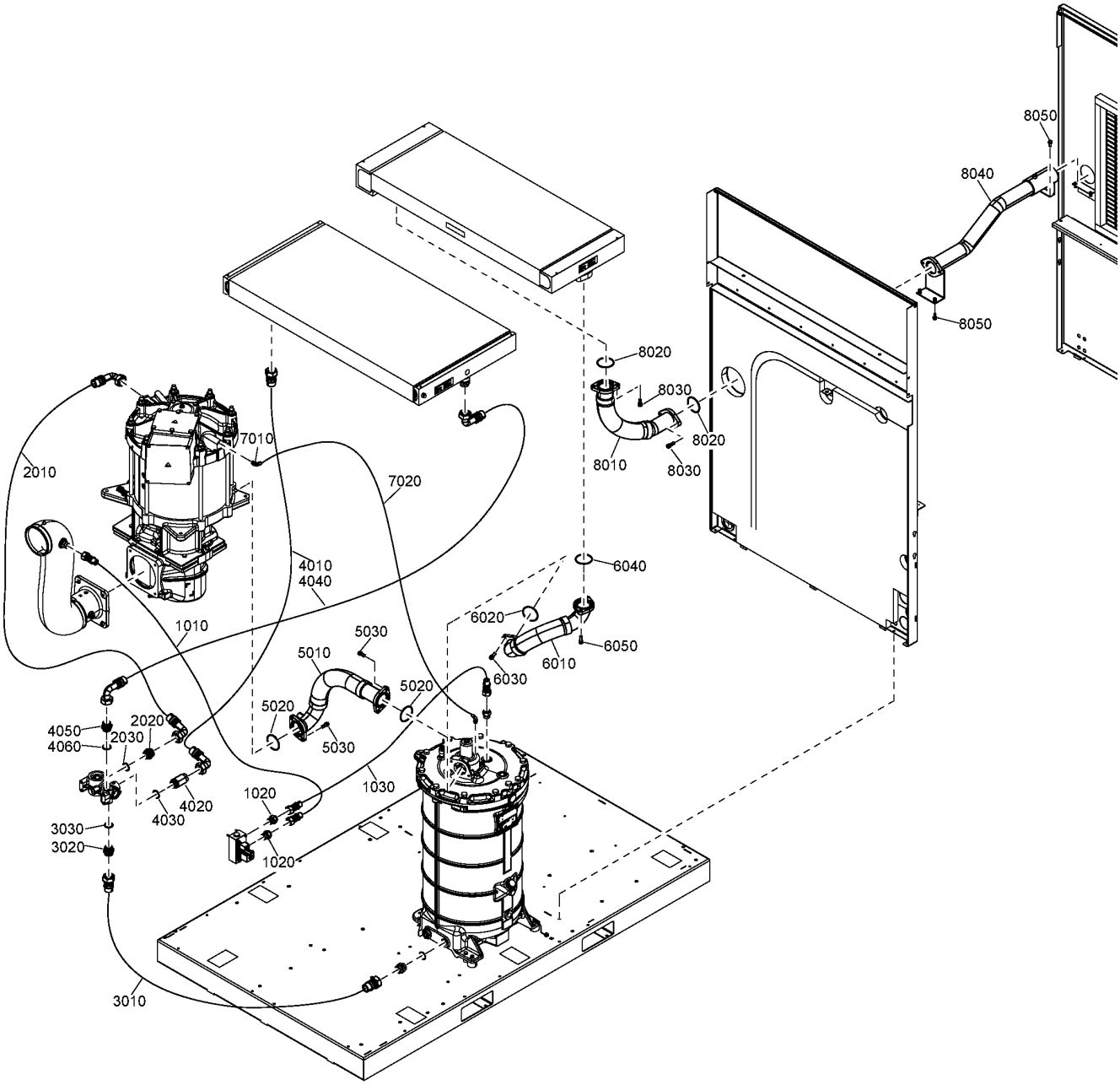
8050
8040
8050
8020
8030
8020
8010
8030
7010
2010
7020
4010
4040
6040
6020
6050
6010
6030
1010
5030
5010
5020
5020
5030
2020
4050
2030
4060
1030
1020
4020
4030
3030
3020
1020
3010

Ref	Part Number	Qty	Name	Validity
1010	1649 8003 40	1	HOSE	**(19/04/2018 - 20/08/2018)** ((MOVOL:200V , MOVOL:230V , MOVOL:380V , MOVOL:460V , MOVOL:575V) + FREQ:60HZ , (MOVOL:200V , MOVOL:400V , MOVOL:500V) + FREQ:50HZ) **(21/08/2018 - ...)** ((MOVOL:200V , MOVOL:230V , MOVOL:575V) + COOL:AIR , MOVOL:380V , MOVOL:460V) + FREQ:60HZ , ((MOVOL:200V , MOVOL:500V) + COOL:AIR , MOVOL:400V) + FREQ:50HZ
1020	0580 0017 36	2	NIPPLE	**(06/12/2017 - 20/08/2018)** ((MOVOL:200V , MOVOL:230V , MOVOL:380V , MOVOL:460V , MOVOL:575V) + FREQ:60HZ , (MOVOL:200V , MOVOL:400V , MOVOL:500V) + FREQ:50HZ) **(21/08/2018 - ...)** ((MOVOL:200V , MOVOL:230V , MOVOL:575V) + COOL:AIR , MOVOL:380V , MOVOL:460V) + FREQ:60HZ , ((MOVOL:200V , MOVOL:500V) + COOL:AIR , MOVOL:400V) + FREQ:50HZ
1030	1649 8003 40	1	HOSE	**(19/04/2018 - 20/08/2018)** ((MOVOL:200V , MOVOL:230V , MOVOL:380V , MOVOL:460V , MOVOL:575V) + FREQ:60HZ , (MOVOL:200V , MOVOL:400V , MOVOL:500V) + FREQ:50HZ) **(21/08/2018 - ...)** ((MOVOL:200V , MOVOL:230V , MOVOL:575V) + COOL:AIR , MOVOL:380V , MOVOL:460V) + FREQ:60HZ , ((MOVOL:200V , MOVOL:500V) + COOL:AIR , MOVOL:400V) + FREQ:50HZ
2010	1625 2073 15	1	HOSE	**(06/12/2017 - 20/08/2018)** ((MOVOL:200V , MOVOL:230V , MOVOL:380V , MOVOL:460V , MOVOL:575V) + FREQ:60HZ , (MOVOL:200V , MOVOL:400V , MOVOL:500V) + FREQ:50HZ) **(21/08/2018 - ...)** ((MOVOL:200V , MOVOL:230V , MOVOL:575V) + COOL:AIR , MOVOL:380V , MOVOL:460V) + FREQ:60HZ , ((MOVOL:200V , MOVOL:500V) + COOL:AIR , MOVOL:400V) + FREQ:50HZ
2020	1625 4290 00	1	NIPPLE	**(06/12/2017 - 20/08/2018)** ((MOVOL:200V , MOVOL:230V , MOVOL:380V , MOVOL:460V , MOVOL:575V) + FREQ:60HZ , (MOVOL:200V , MOVOL:400V , MOVOL:500V) + FREQ:50HZ) **(21/08/2018 - ...)** ((MOVOL:200V , MOVOL:230V , MOVOL:575V) + COOL:AIR , MOVOL:380V , MOVOL:460V) + FREQ:60HZ , ((MOVOL:200V , MOVOL:500V) + COOL:AIR , MOVOL:400V) + FREQ:50HZ
2030	0663 3130 00	1	O-RING	**(06/12/2017 - 20/08/2018)** ((MOVOL:200V , MOVOL:230V , MOVOL:380V , MOVOL:460V , MOVOL:575V) + FREQ:60HZ , (MOVOL:200V , MOVOL:400V , MOVOL:500V) + FREQ:50HZ) **(21/08/2018 - ...)** ((MOVOL:200V , MOVOL:230V , MOVOL:575V) + COOL:AIR , MOVOL:380V , MOVOL:460V) + FREQ:60HZ , ((MOVOL:200V , MOVOL:500V) + COOL:AIR , MOVOL:400V) + FREQ:50HZ
3010	1625 2073 01	1	HOSE	**(06/12/2017 - 20/08/2018)** ((MOVOL:200V , MOVOL:230V , MOVOL:380V , MOVOL:460V , MOVOL:575V) + FREQ:60HZ , (MOVOL:200V , MOVOL:400V , MOVOL:500V) + FREQ:50HZ) **(21/08/2018 - ...)** ((MOVOL:200V , MOVOL:230V , MOVOL:575V) + COOL:AIR , MOVOL:380V , MOVOL:460V) + FREQ:60HZ , ((MOVOL:200V , MOVOL:500V) + COOL:AIR , MOVOL:400V) + FREQ:50HZ
3020	1625 4290 00	1	NIPPLE	**(06/12/2017 - 20/08/2018)** ((MOVOL:200V , MOVOL:230V , MOVOL:380V , MOVOL:460V , MOVOL:575V) + FREQ:60HZ , (MOVOL:200V , MOVOL:400V , MOVOL:500V) + FREQ:50HZ) **(21/08/2018 - ...)** ((MOVOL:200V , MOVOL:230V , MOVOL:575V) + COOL:AIR , MOVOL:380V , MOVOL:460V) + FREQ:60HZ , ((MOVOL:200V , MOVOL:500V) + COOL:AIR , MOVOL:400V) + FREQ:50HZ
3030	0663 3130 00	1	O-RING	**(06/12/2017 - 20/08/2018)** ((MOVOL:200V , MOVOL:230V , MOVOL:380V , MOVOL:460V , MOVOL:575V) + FREQ:60HZ , (MOVOL:200V , MOVOL:400V , MOVOL:500V) + FREQ:50HZ) **(21/08/2018 - ...)** ((MOVOL:200V , MOVOL:230V , MOVOL:575V) + COOL:AIR , MOVOL:380V , MOVOL:460V) + FREQ:60HZ , ((MOVOL:200V , MOVOL:500V) + COOL:AIR , MOVOL:400V) + FREQ:50HZ
4010	1625 2073 17	1	HOSE	**(06/12/2017 - ...)** ((MOVOL:200V , MOVOL:230V , MOVOL:380V , MOVOL:460V , MOVOL:575V) + FREQ:60HZ , (MOVOL:200V , MOVOL:400V , MOVOL:500V) + FREQ:50HZ)
4020	1625 4288 00	1	NIPPLE	**(06/12/2017 - ...)** ((MOVOL:200V , MOVOL:230V , MOVOL:380V , MOVOL:460V , MOVOL:575V) + FREQ:60HZ , (MOVOL:200V , MOVOL:400V , MOVOL:500V) + FREQ:50HZ)
4030	0663 3130 00	1	O-RING	**(06/12/2017 - ...)** ((MOVOL:200V , MOVOL:230V , MOVOL:380V , MOVOL:460V , MOVOL:575V) + FREQ:60HZ , (MOVOL:200V , MOVOL:400V , MOVOL:500V) + FREQ:50HZ)

Legend:

COOL:AIR - Cooling:Air cooled
IDRY:N - Integrated dryer:No
MOVOL:380V - Supply voltage:380 V
MOVOL:500V - Supply voltage:500 V
FREQ:50HZ - Frequency:50 Hz
MOVOL:200V - Supply voltage:200 V
MOVOL:400V - Supply voltage:400 V
MOVOL:575V - Supply voltage:575 V
FREQ:60HZ - Frequency:60 Hz
MOVOL:230V - Supply voltage:230 V
MOVOL:460V - Supply voltage:460 V

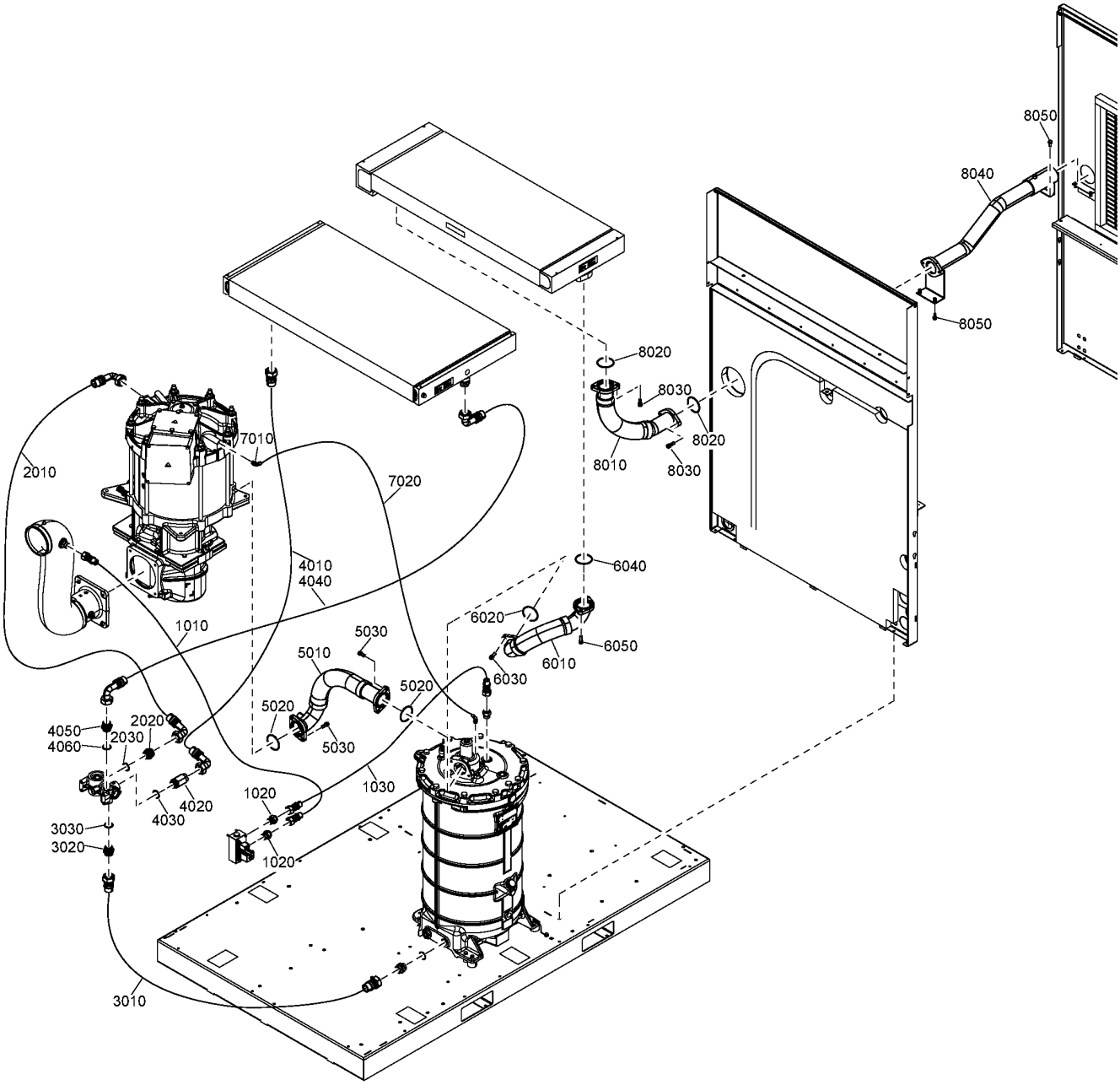
8050
8040
8050
8020
8030
8020
8010
8030
7010
2010
7020
4010
4040
6040
6020
6050
6010
6030
1010
5030
5010
5020
5020
5030
4050
4060
2020
2030
4020
4030
1020
1030
3030
3020
1020
3010

Ref	Part Number	Qty	Name	Validity
4040	1625 2073 16	1	HOSE	**(06/12/2017 - ...)** ((MOVOL:200V , MOVOL:230V , MOVOL:380V , MOVOL:460V , MOVOL:575V) + FREQ:60HZ , (MOVOL:200V , MOVOL:400V , MOVOL:500V) + FREQ:50HZ)
4050	1625 4290 00	1	NIPPLE	**(06/12/2017 - ...)** ((MOVOL:200V , MOVOL:230V , MOVOL:380V , MOVOL:460V , MOVOL:575V) + FREQ:60HZ , (MOVOL:200V , MOVOL:400V , MOVOL:500V) + FREQ:50HZ)
4060	0663 3130 00	1	O-RING	**(06/12/2017 - ...)** ((MOVOL:200V , MOVOL:230V , MOVOL:380V , MOVOL:460V , MOVOL:575V) + FREQ:60HZ , (MOVOL:200V , MOVOL:400V , MOVOL:500V) + FREQ:50HZ)
5010	1649 8001 80	1	HOSE	**(06/12/2017 - 20/08/2018)** ((MOVOL:200V , MOVOL:230V , MOVOL:380V , MOVOL:460V , MOVOL:575V) + FREQ:60HZ , (MOVOL:200V , MOVOL:400V , MOVOL:500V) + FREQ:50HZ) **(21/08/2018 - ...)** ((MOVOL:200V , MOVOL:230V , MOVOL:575V) + COOL:AIR , MOVOL:380V , MOVOL:460V) + FREQ:60HZ , ((MOVOL:200V , MOVOL:500V) + COOL:AIR , MOVOL:400V) + FREQ:50HZ
5020	0663 7138 00	2	O-RING	**(06/12/2017 - 20/08/2018)** ((MOVOL:200V , MOVOL:230V , MOVOL:380V , MOVOL:460V , MOVOL:575V) + FREQ:60HZ , (MOVOL:200V , MOVOL:400V , MOVOL:500V) + FREQ:50HZ) **(21/08/2018 - ...)** ((MOVOL:200V , MOVOL:230V , MOVOL:575V) + COOL:AIR , MOVOL:380V , MOVOL:460V) + FREQ:60HZ , ((MOVOL:200V , MOVOL:500V) + COOL:AIR , MOVOL:400V) + FREQ:50HZ
5030	0211 1363 03	4	SCREW	**(06/12/2017 - 20/08/2018)** ((MOVOL:200V , MOVOL:230V , MOVOL:380V , MOVOL:460V , MOVOL:575V) + FREQ:60HZ , (MOVOL:200V , MOVOL:400V , MOVOL:500V) + FREQ:50HZ) **(21/08/2018 - ...)** ((MOVOL:200V , MOVOL:230V , MOVOL:575V) + COOL:AIR , MOVOL:380V , MOVOL:460V) + FREQ:60HZ , ((MOVOL:200V , MOVOL:500V) + COOL:AIR , MOVOL:400V) + FREQ:50HZ
6010	1649 8001 82	1	HOSE	**(06/12/2017 - ...)** ((MOVOL:200V , MOVOL:230V , MOVOL:380V , MOVOL:460V , MOVOL:575V) + FREQ:60HZ , (MOVOL:200V , MOVOL:400V , MOVOL:500V) + FREQ:50HZ)
6020	0663 7138 00	1	O-RING	**(19/04/2018 - ...)** ((MOVOL:200V , MOVOL:230V , MOVOL:380V , MOVOL:460V , MOVOL:575V) + FREQ:60HZ , (MOVOL:200V , MOVOL:400V , MOVOL:500V) + FREQ:50HZ)
6030	0211 1363 03	2	SCREW	**(19/04/2018 - ...)** ((MOVOL:200V , MOVOL:230V , MOVOL:380V , MOVOL:460V , MOVOL:575V) + FREQ:60HZ , (MOVOL:200V , MOVOL:400V , MOVOL:500V) + FREQ:50HZ)
6040	0663 7138 00	1	O-RING	**(19/04/2018 - ...)** ((MOVOL:200V , MOVOL:230V , MOVOL:380V , MOVOL:460V , MOVOL:575V) + FREQ:60HZ , (MOVOL:200V , MOVOL:400V , MOVOL:500V) + FREQ:50HZ)
6050	0211 1363 03	2	SCREW	**(19/04/2018 - ...)** ((MOVOL:200V , MOVOL:230V , MOVOL:380V , MOVOL:460V , MOVOL:575V) + FREQ:60HZ , (MOVOL:200V , MOVOL:400V , MOVOL:500V) + FREQ:50HZ)
7010	~~0583 8121 00~~	1	ELBOW	**(06/12/2017 - 20/08/2018)** ((MOVOL:200V , MOVOL:230V , MOVOL:380V , MOVOL:460V , MOVOL:575V) + FREQ:60HZ , (MOVOL:200V , MOVOL:400V , MOVOL:500V) + FREQ:50HZ) **(21/08/2018 - 30/12/2027)** ((MOVOL:200V , MOVOL:230V , MOVOL:575V) + COOL:AIR , MOVOL:380V , MOVOL:460V) + FREQ:60HZ , ((MOVOL:200V , MOVOL:500V) + COOL:AIR , MOVOL:400V) + FREQ:50HZ
	Substituted by:	0583 8121 58 - ELBOW G1/4 X 6 (quantity: 1)		
7020	~~0070 6002 68~~	AR	TUBE 4X6	**(06/12/2017 - 20/08/2018)** ((MOVOL:200V , MOVOL:230V , MOVOL:380V , MOVOL:460V , MOVOL:575V) + FREQ:60HZ , (MOVOL:200V , MOVOL:400V , MOVOL:500V) + FREQ:50HZ) **(21/08/2018 - ...)** ((MOVOL:200V , MOVOL:230V , MOVOL:575V) + COOL:AIR , MOVOL:380V , MOVOL:460V) + FREQ:60HZ , ((MOVOL:200V , MOVOL:500V) + COOL:AIR , MOVOL:400V) + FREQ:50HZ
	Substituted by:	0070 7250 04 - TUBE ID4 OD6 BLACK (quantity: 1)		
8010	1649 8001 78	1	HOSE	**(06/12/2017 - ...)**
8020	0663 7138 00	2	O-RING	**(06/12/2017 - ...)**
8030	0211 1363 03	4	SCREW	**(06/12/2017 - ...)**
8040	1649 8003 26	1	PIPE	**(06/12/2017 - ...)**
8050	0147 1963 08	2	HEXAGON BOLT	**(19/04/2018 - ...)**

Legend:

COOL:AIR - Cooling:Air cooled
IDRY:N - Integrated dryer:No
MOVOL:380V - Supply voltage:380 V
MOVOL:500V - Supply voltage:500 V
FREQ:50HZ - Frequency:50 Hz
MOVOL:200V - Supply voltage:200 V
MOVOL:400V - Supply voltage:400 V
MOVOL:575V - Supply voltage:575 V
FREQ:60HZ - Frequency:60 Hz
MOVOL:230V - Supply voltage:230 V
MOVOL:460V - Supply voltage:460 V

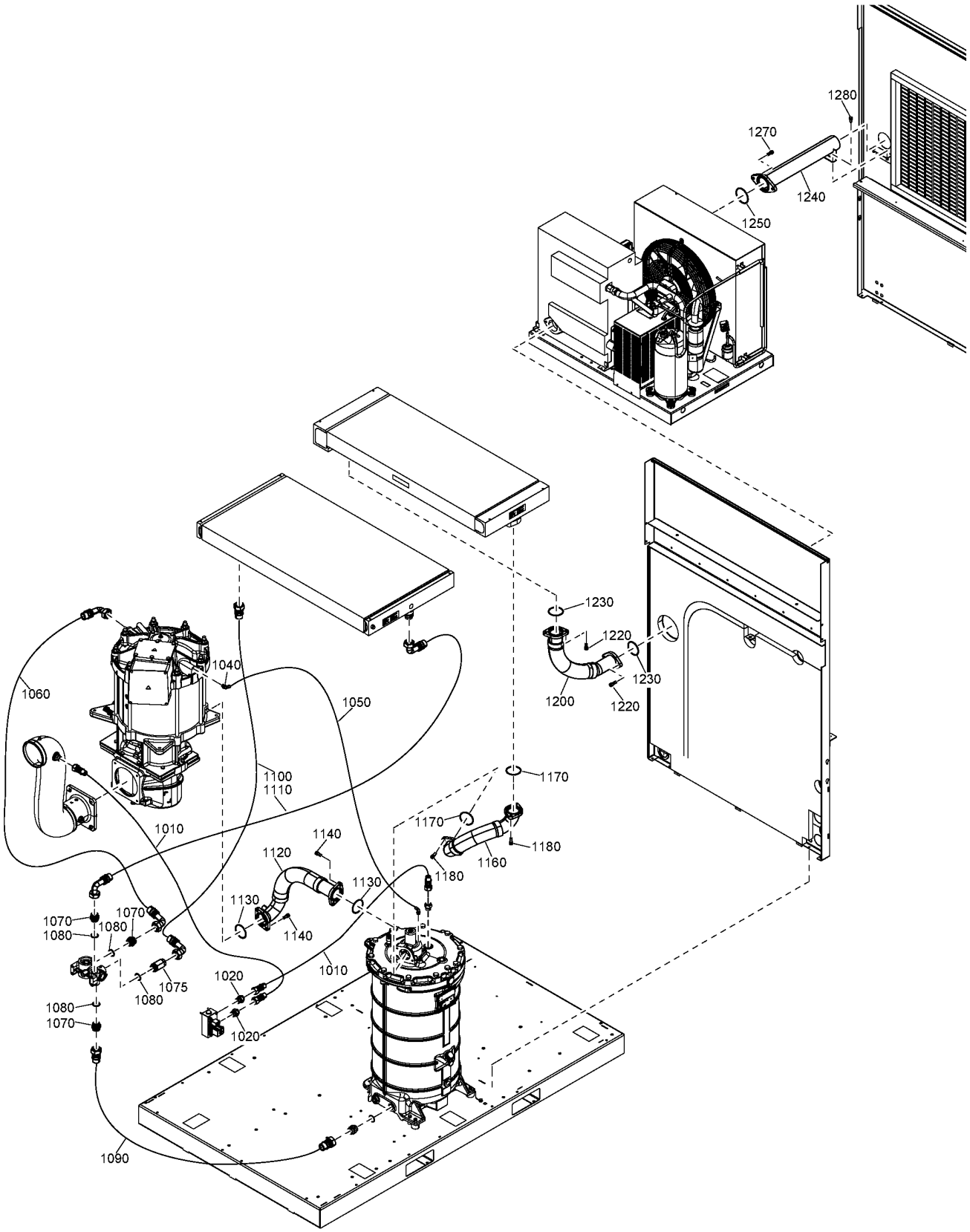
1280
1270
1240
1250
1230
1220
1230
1200
1220
1040
1060
1050
1100
1110
1170
1170
1180
1160
1180
1140
1120
1130
1130
1140
1010
1010
1070
1070
1080
1080
1075
1080
1020
1020
1080
1070
1090

Ref	Part Number	Qty	Name	Validity
1010	1649 8003 40	2	HOSE	**(02/03/2017 - 05/07/2017)** FREQ:50HZ + MOVOL:400V **(06/07/2017 - 12/07/2017)** ((MOVOL:380V , MOVOL:575V) + FREQ:60HZ , FREQ:50HZ + MOVOL:400V) **(13/07/2017 - 05/12/2017)**
1020	0580 0017 36	2	PIPE FITTING	**(06/07/2017 - 12/07/2017)** FREQ:60HZ + MOVOL:575V **(13/07/2017 - 19/07/2017)** ((MOVOL:200V , MOVOL:230V , MOVOL:575V) + FREQ:60HZ , (MOVOL:200V , MOVOL:500V) + FREQ:50HZ) **(20/07/2017 - 05/12/2017)**
1040		1	PIPE FITTING	**(02/03/2017 - 05/07/2017)** FREQ:50HZ + MOVOL:400V **(06/07/2017 - 12/07/2017)** ((MOVOL:380V , MOVOL:575V) + FREQ:60HZ , FREQ:50HZ + MOVOL:400V) **(13/07/2017 - 05/12/2017)**
	Substituted by:	0583 8121 58 - ELBOW G1/4 X 6 (quantity: 1)		
	Service kits:	2901 9901 03 - MOTOR OVERHAUL KIT		
1050	~~0070 6002 68~~	AR	TUBE	**(02/03/2017 - 05/07/2017)** FREQ:50HZ + MOVOL:400V **(06/07/2017 - 12/07/2017)** (FREQ:50HZ + MOVOL:400V , FREQ:60HZ + MOVOL:380V) **(13/07/2017 - 05/12/2017)** ((MOVOL:380V , MOVOL:460V) + FREQ:60HZ , FREQ:50HZ + MOVOL:400V)
	Substituted by:	0070 7250 04 - TUBE ID4 OD6 BLACK (quantity: 1)		
1050	~~0070 6002 68~~	AR	TUBE	**(06/07/2017 - 12/07/2017)** FREQ:60HZ + MOVOL:575V **(13/07/2017 - 05/12/2017)** ((MOVOL:200V , MOVOL:230V , MOVOL:575V) + FREQ:60HZ , (MOVOL:200V , MOVOL:500V) + FREQ:50HZ)
	Substituted by:	0070 7250 04 - TUBE ID4 OD6 BLACK (quantity: 1)		
1060	1625 2073 15	1	HOSE	**(05/05/2017 - 05/07/2017)** FREQ:50HZ + MOVOL:400V **(06/07/2017 - 12/07/2017)** ((MOVOL:380V , MOVOL:575V) + FREQ:60HZ , FREQ:50HZ + MOVOL:400V) **(13/07/2017 - 05/12/2017)**
1070	1625 4290 00	3	NIPPLE	**(06/07/2017 - 12/07/2017)** ((MOVOL:380V , MOVOL:575V) + FREQ:60HZ , FREQ:50HZ + MOVOL:400V) **(13/07/2017 - 05/12/2017)**
1075	1625 4288 00	1	NIPPLE	**(06/07/2017 - 12/07/2017)** ((MOVOL:380V , MOVOL:575V) + FREQ:60HZ , FREQ:50HZ + MOVOL:400V) **(13/07/2017 - 05/12/2017)**
1080	0663 3130 00	4	O-RING	**(02/03/2017 - 05/07/2017)** FREQ:50HZ + MOVOL:400V **(06/07/2017 - 12/07/2017)** ((MOVOL:380V , MOVOL:575V) + FREQ:60HZ , FREQ:50HZ + MOVOL:400V) **(13/07/2017 - 05/12/2017)**
1090	1625 2073 01	1	HOSE	**(02/03/2017 - 05/07/2017)** FREQ:50HZ + MOVOL:400V **(06/07/2017 - 12/07/2017)** ((MOVOL:380V , MOVOL:575V) + FREQ:60HZ , FREQ:50HZ + MOVOL:400V) **(13/07/2017 - 05/12/2017)**
1100	1625 2073 17	1	HOSE	**(05/05/2017 - 05/07/2017)** FREQ:50HZ + MOVOL:400V **(06/07/2017 - 12/07/2017)** ((MOVOL:380V , MOVOL:575V) + FREQ:60HZ , FREQ:50HZ + MOVOL:400V) **(13/07/2017 - 05/12/2017)**
1110	1625 2073 16	1	HOSE	**(05/05/2017 - 05/07/2017)** FREQ:50HZ + MOVOL:400V **(06/07/2017 - 12/07/2017)** ((MOVOL:380V , MOVOL:575V) + FREQ:60HZ , FREQ:50HZ + MOVOL:400V) **(13/07/2017 - 05/12/2017)**
1120	1649 8001 80	1	PIPE	**(02/03/2017 - 05/07/2017)** FREQ:50HZ + MOVOL:400V **(06/07/2017 - 12/07/2017)** ((MOVOL:380V , MOVOL:575V) + FREQ:60HZ , FREQ:50HZ + MOVOL:400V) **(13/07/2017 - 05/12/2017)**
1130		2	O-RING	**(02/03/2017 - 05/07/2017)** FREQ:50HZ + MOVOL:400V **(06/07/2017 - 12/07/2017)** ((MOVOL:380V , MOVOL:575V) + FREQ:60HZ , FREQ:50HZ + MOVOL:400V) **(13/07/2017 - 05/12/2017)**
	Service kits:	2901 9901 03 - MOTOR OVERHAUL KIT		
1140	0211 1363 03	4	SCREW	**(02/03/2017 - 05/07/2017)** FREQ:50HZ + MOVOL:400V **(06/07/2017 - 12/07/2017)** ((MOVOL:380V , MOVOL:575V) + FREQ:60HZ , FREQ:50HZ + MOVOL:400V) **(13/07/2017 - 05/12/2017)**
1160	1649 8001 82	1	PIPE	**(02/03/2017 - 05/07/2017)** FREQ:50HZ + MOVOL:400V **(06/07/2017 - 12/07/2017)** ((MOVOL:380V , MOVOL:575V) + FREQ:60HZ , FREQ:50HZ + MOVOL:400V) **(13/07/2017 - 05/12/2017)**

Legend:

COOL:AIR - Cooling:Air cooled
IDRY:Y - Integrated dryer:Yes
MOVOL:380V - Supply voltage:380 V
MOVOL:500V - Supply voltage:500 V
FREQ:50HZ - Frequency:50 Hz
MOVOL:200V - Supply voltage:200 V
MOVOL:400V - Supply voltage:400 V
MOVOL:575V - Supply voltage:575 V
FREQ:60HZ - Frequency:60 Hz
MOVOL:230V - Supply voltage:230 V
MOVOL:460V - Supply voltage:460 V

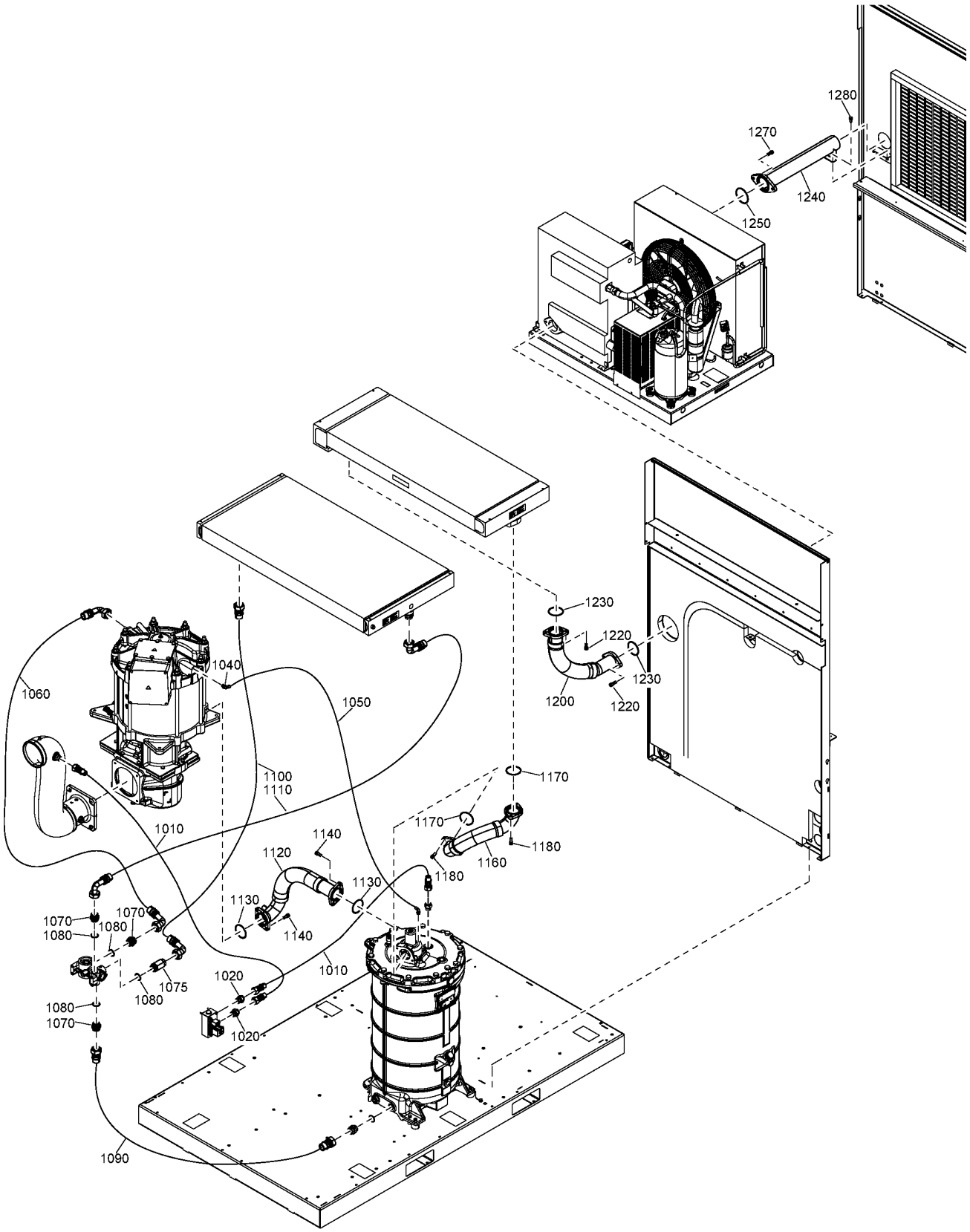
1280
1270
1240
1250
1230
1220
1230
1200
1220
1040
1060
1050
1100
1110
1170
1170
1180
1160
1180
1140
1120
1130
1130
1140
1010
1010
1070
1070
1080
1080
1075
1080
1020
1020
1080
1070
1090

Ref	Part Number	Qty	Name	Validity
1170		2	O-RING	**(02/03/2017 - 05/07/2017)** FREQ:50HZ + MOVOL:400V **(06/07/2017 - 12/07/2017)** ((MOVOL:380V , MOVOL:575V) + FREQ:60HZ , FREQ:50HZ + MOVOL:400V) **(13/07/2017 - 05/12/2017)**
	Service kits:	2901 9901 03 - MOTOR OVERHAUL KIT		
1180	0211 1363 03	4	SCREW	**(02/03/2017 - 05/07/2017)** FREQ:50HZ + MOVOL:400V **(06/07/2017 - 12/07/2017)** ((MOVOL:380V , MOVOL:575V) + FREQ:60HZ , FREQ:50HZ + MOVOL:400V) **(13/07/2017 - 05/12/2017)**
1200	1649 8001 78	1	PIPE	**(02/03/2017 - 05/07/2017)** FREQ:50HZ + MOVOL:400V **(06/07/2017 - 12/07/2017)** ((MOVOL:380V , MOVOL:575V) + FREQ:60HZ , FREQ:50HZ + MOVOL:400V) **(13/07/2017 - 05/12/2017)**
1220	0211 1363 03	4	SCREW	**(02/03/2017 - 05/07/2017)** FREQ:50HZ + MOVOL:400V **(06/07/2017 - 12/07/2017)** ((MOVOL:380V , MOVOL:575V) + FREQ:60HZ , FREQ:50HZ + MOVOL:400V) **(13/07/2017 - 05/12/2017)**
1230		2	O-RING	**(02/03/2017 - 05/07/2017)** FREQ:50HZ + MOVOL:400V **(06/07/2017 - 12/07/2017)** ((MOVOL:380V , MOVOL:575V) + FREQ:60HZ , FREQ:50HZ + MOVOL:400V) **(13/07/2017 - 05/12/2017)**
	Service kits:	2901 9901 03 - MOTOR OVERHAUL KIT		
1240	1625 8217 00	1	PIPE	**(02/03/2017 - 05/07/2017)** FREQ:50HZ + MOVOL:400V **(06/07/2017 - 12/07/2017)** ((MOVOL:380V , MOVOL:575V) + FREQ:60HZ , FREQ:50HZ + MOVOL:400V) **(13/07/2017 - 05/12/2017)**
1250	0663 2104 98	1	O-RING	**(02/03/2017 - 05/07/2017)** FREQ:50HZ + MOVOL:400V **(06/07/2017 - 12/07/2017)** ((MOVOL:380V , MOVOL:575V) + FREQ:60HZ , FREQ:50HZ + MOVOL:400V) **(13/07/2017 - 05/12/2017)**
1270	0211 1363 03	2	SCREW	**(02/03/2017 - 05/07/2017)** FREQ:50HZ + MOVOL:400V **(06/07/2017 - 12/07/2017)** ((MOVOL:380V , MOVOL:575V) + FREQ:60HZ , FREQ:50HZ + MOVOL:400V) **(13/07/2017 - 05/12/2017)**
1280	0147 1963 08	2	SCREW	**(02/03/2017 - 05/07/2017)** FREQ:50HZ + MOVOL:400V **(06/07/2017 - 12/07/2017)** ((MOVOL:380V , MOVOL:575V) + FREQ:60HZ , FREQ:50HZ + MOVOL:400V) **(13/07/2017 - 05/12/2017)**

Legend:

COOL:AIR - Cooling:Air cooled
IDRY:Y - Integrated dryer:Yes
MOVOL:380V - Supply voltage:380 V
MOVOL:500V - Supply voltage:500 V
FREQ:50HZ - Frequency:50 Hz
MOVOL:200V - Supply voltage:200 V
MOVOL:400V - Supply voltage:400 V
MOVOL:575V - Supply voltage:575 V
FREQ:60HZ - Frequency:60 Hz
MOVOL:230V - Supply voltage:230 V
MOVOL:460V - Supply voltage:460 V

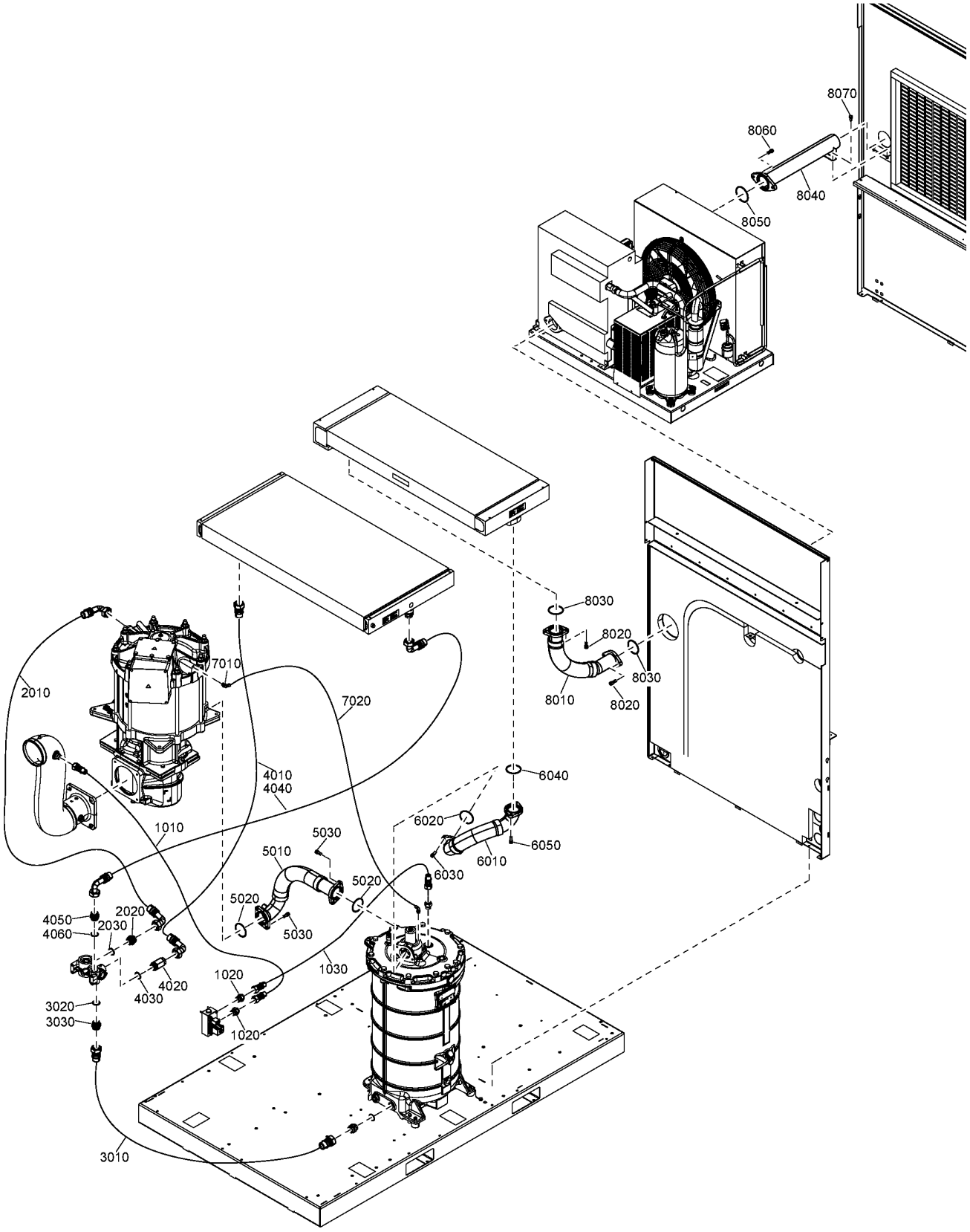
8070
8060
8040
8050
8030
8020
8030
8010
8020
7010
2010
7020
4010
4040
6040
6020
6050
6010
6030
1010
5030
5010
5020
5020
5030
4050
4060
2020
2030
4020
4030
1020
1030
3020
3030
1020
3010

Ref	Part Number	Qty	Name	Validity
1010	1649 8003 40	1	HOSE	**(19/04/2018 - 20/08/2018)** **(21/08/2018 - ...)** ((MOVOL:200V , MOVOL:230V , MOVOL:575V) + COOL:AIR , MOVOL:380V , MOVOL:460V) + FREQ:60HZ , ((MOVOL:200V , MOVOL:500V) + COOL:AIR , MOVOL:400V) + FREQ:50HZ
1020	0580 0017 36	2	NIPPLE	**(06/12/2017 - 20/08/2018)** **(21/08/2018 - ...)** ((MOVOL:200V , MOVOL:230V , MOVOL:575V) + COOL:AIR , MOVOL:380V , MOVOL:460V) + FREQ:60HZ , ((MOVOL:200V , MOVOL:500V) + COOL:AIR , MOVOL:400V) + FREQ:50HZ
1030	1649 8003 40	1	HOSE	**(19/04/2018 - 20/08/2018)** **(21/08/2018 - ...)** ((MOVOL:200V , MOVOL:230V , MOVOL:575V) + COOL:AIR , MOVOL:380V , MOVOL:460V) + FREQ:60HZ , ((MOVOL:200V , MOVOL:500V) + COOL:AIR , MOVOL:400V) + FREQ:50HZ
2010	1625 2073 15	1	HOSE	**(06/12/2017 - 20/08/2018)** **(21/08/2018 - ...)** ((MOVOL:200V , MOVOL:230V , MOVOL:575V) + COOL:AIR , MOVOL:380V , MOVOL:460V) + FREQ:60HZ , ((MOVOL:200V , MOVOL:500V) + COOL:AIR , MOVOL:400V) + FREQ:50HZ
2020	1625 4290 00	1	NIPPLE	**(06/12/2017 - 20/08/2018)** **(21/08/2018 - ...)** ((MOVOL:200V , MOVOL:230V , MOVOL:575V) + COOL:AIR , MOVOL:380V , MOVOL:460V) + FREQ:60HZ , ((MOVOL:200V , MOVOL:500V) + COOL:AIR , MOVOL:400V) + FREQ:50HZ
2030	0663 3130 00	1	O-RING	**(06/12/2017 - 20/08/2018)** **(21/08/2018 - ...)** ((MOVOL:200V , MOVOL:230V , MOVOL:575V) + COOL:AIR , MOVOL:380V , MOVOL:460V) + FREQ:60HZ , ((MOVOL:200V , MOVOL:500V) + COOL:AIR , MOVOL:400V) + FREQ:50HZ
3010	1625 2073 01	1	HOSE	**(06/12/2017 - 20/08/2018)** **(21/08/2018 - ...)** ((MOVOL:200V , MOVOL:230V , MOVOL:575V) + COOL:AIR , MOVOL:380V , MOVOL:460V) + FREQ:60HZ , ((MOVOL:200V , MOVOL:500V) + COOL:AIR , MOVOL:400V) + FREQ:50HZ
3020	1625 4290 00	1	NIPPLE	**(06/12/2017 - 20/08/2018)** **(21/08/2018 - ...)** ((MOVOL:200V , MOVOL:230V , MOVOL:575V) + COOL:AIR , MOVOL:380V , MOVOL:460V) + FREQ:60HZ , ((MOVOL:200V , MOVOL:500V) + COOL:AIR , MOVOL:400V) + FREQ:50HZ
3030	0663 3130 00	1	O-RING	**(06/12/2017 - 20/08/2018)** **(21/08/2018 - ...)** ((MOVOL:200V , MOVOL:230V , MOVOL:575V) + COOL:AIR , MOVOL:380V , MOVOL:460V) + FREQ:60HZ , ((MOVOL:200V , MOVOL:500V) + COOL:AIR , MOVOL:400V) + FREQ:50HZ
4010	1625 2073 17	1	HOSE	**(06/12/2017 - ...)**
4020	1625 4288 00	1	NIPPLE	**(06/12/2017 - ...)**
4030	0663 3130 00	1	O-RING	**(06/12/2017 - ...)**
4040	1625 2073 16	1	HOSE	**(06/12/2017 - ...)**
4050	1625 4290 00	1	NIPPLE	**(06/12/2017 - ...)**
4060	0663 3130 00	1	O-RING	**(06/12/2017 - ...)**
5010	1649 8001 80	1	HOSE	**(06/12/2017 - 20/08/2018)** **(21/08/2018 - ...)** ((MOVOL:200V , MOVOL:230V , MOVOL:575V) + COOL:AIR , MOVOL:380V , MOVOL:460V) + FREQ:60HZ , ((MOVOL:200V , MOVOL:500V) + COOL:AIR , MOVOL:400V) + FREQ:50HZ
5020	0663 7138 00	2	O-RING	**(06/12/2017 - 20/08/2018)** **(21/08/2018 - ...)** ((MOVOL:200V , MOVOL:230V , MOVOL:575V) + COOL:AIR , MOVOL:380V , MOVOL:460V) + FREQ:60HZ , ((MOVOL:200V , MOVOL:500V) + COOL:AIR , MOVOL:400V) + FREQ:50HZ
5030	0211 1363 03	4	SCREW	**(06/12/2017 - 20/08/2018)** **(21/08/2018 - ...)** ((MOVOL:200V , MOVOL:230V , MOVOL:575V) + COOL:AIR , MOVOL:380V , MOVOL:460V) + FREQ:60HZ , ((MOVOL:200V , MOVOL:500V) + COOL:AIR , MOVOL:400V) + FREQ:50HZ
6010	1649 8001 82	1	HOSE	**(06/12/2017 - ...)**
6020	0663 7138 00	1	O-RING	**(19/04/2018 - ...)**
6030	0211 1363 03	2	SCREW	**(19/04/2018 - ...)**

Legend:

COOL:AIR - Cooling:Air cooled
IDRY:Y - Integrated dryer:Yes
MOVOL:380V - Supply voltage:380 V
MOVOL:500V - Supply voltage:500 V
FREQ:50HZ - Frequency:50 Hz
MOVOL:200V - Supply voltage:200 V
MOVOL:400V - Supply voltage:400 V
MOVOL:575V - Supply voltage:575 V
FREQ:60HZ - Frequency:60 Hz
MOVOL:230V - Supply voltage:230 V
MOVOL:460V - Supply voltage:460 V

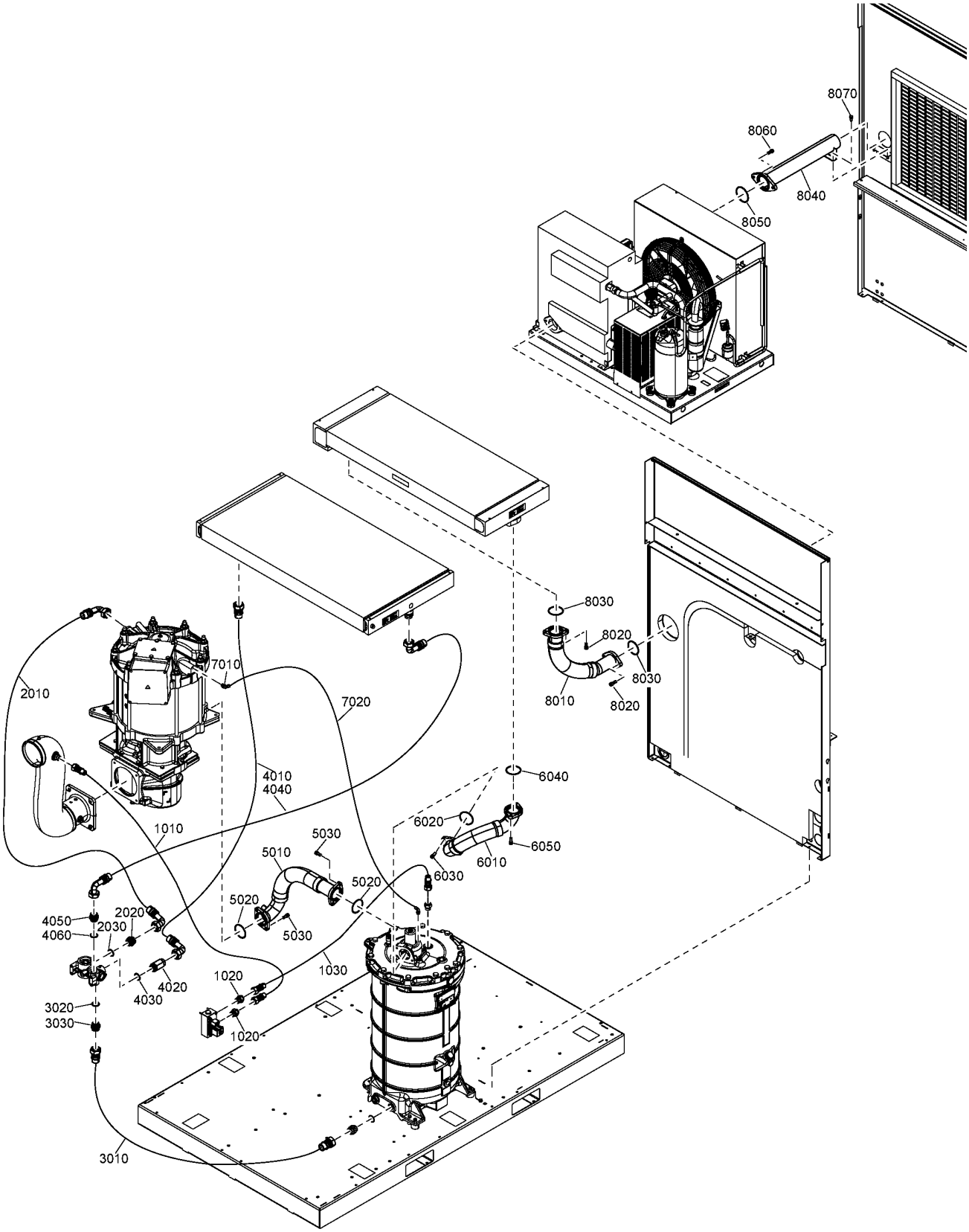
8070
8060
8040
8050
8030
8020
8030
8010
8020
7010
2010
7020
4010
4040
6040
6020
6050
6010
6030
1010
5030
5010
5020
5020
5030
4050
4060
2020
2030
4020
4030
1020
1030
3020
3030
1020
3010

Ref	Part Number	Qty	Name	Validity
6040	0663 7138 00	1	O-RING	**(19/04/2018 - ...)**
6050	0211 1363 03	2	SCREW	**(19/04/2018 - ...)**
7010	~~0583 8121 00~~	1	ELBOW	**(06/12/2017 - 20/08/2018)** **(21/08/2018 - 30/12/2027)** ((MOVOL:200V , MOVOL:230V , MOVOL:575V) + COOL:AIR , MOVOL:380V , MOVOL:460V) + FREQ:60HZ , ((MOVOL:200V , MOVOL:500V) + COOL:AIR , MOVOL:400V) + FREQ:50HZ
	Substituted by:	0583 8121 58 - ELBOW G1/4 X 6 (quantity: 1)		
7020	~~0070 6002 68~~	AR	TUBE 4X6	**(06/12/2017 - 20/08/2018)** **(21/08/2018 - ...)** ((MOVOL:200V , MOVOL:230V , MOVOL:575V) + COOL:AIR , MOVOL:380V , MOVOL:460V) + FREQ:60HZ , ((MOVOL:200V , MOVOL:500V) + COOL:AIR , MOVOL:400V) + FREQ:50HZ
	Substituted by:	0070 7250 04 - TUBE ID4 OD6 BLACK (quantity: 1)		
8010	1649 8001 78	1	HOSE	**(06/12/2017 - ...)**
8020	0663 7138 00	2	O-RING	**(06/12/2017 - ...)**
8030	0211 1363 03	4	SCREW	**(06/12/2017 - ...)**
8040	1625 8217 00	1	PIPE	**(06/12/2017 - ...)**
8050	0663 2104 98	1	O-RING	**(06/12/2017 - ...)**
8060	0211 1363 03	2	SCREW	**(06/12/2017 - ...)**
8070	0147 1963 08	2	HEXAGON BOLT	**(06/12/2017 - ...)**

Legend:

COOL:AIR - Cooling:Air cooled
FREQ:50HZ - Frequency:50 Hz
FREQ:60HZ - Frequency:60 Hz
IDRY:Y - Integrated dryer:Yes
MOVOL:200V - Supply voltage:200 V
MOVOL:230V - Supply voltage:230 V
MOVOL:380V - Supply voltage:380 V
MOVOL:400V - Supply voltage:400 V
MOVOL:460V - Supply voltage:460 V
MOVOL:500V - Supply voltage:500 V
MOVOL:575V - Supply voltage:575 V

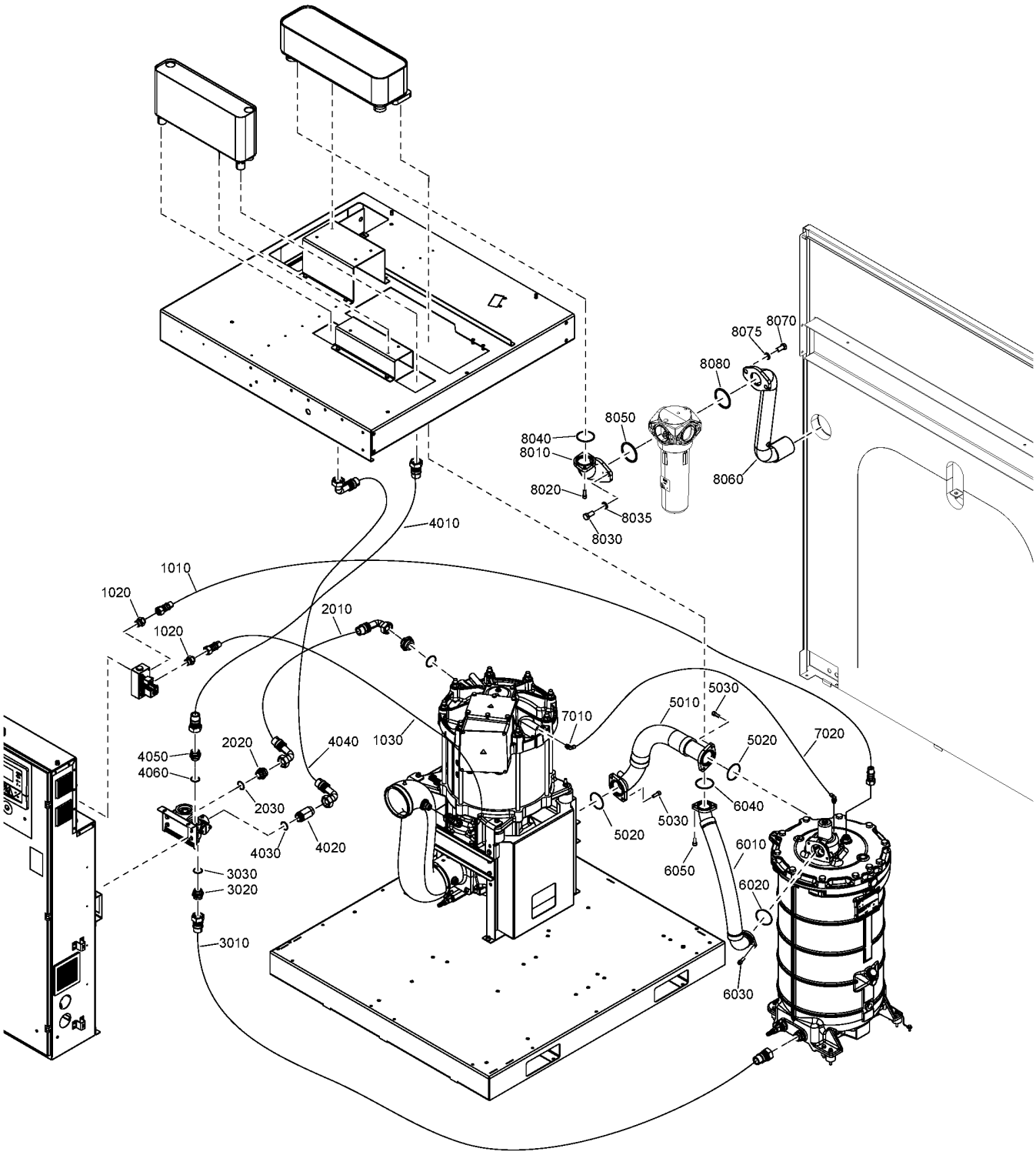
8070
8075
8080
8050
8040
8010
8020
8035
8030
8060
4010
1010
1020
1020
2010
5030
5010
7010
7020
5020
1030
4040
2020
4050
4060
2030
4030
4020
5030
6040
5020
6010
6050
6020
3030
3020
3010
6030

Ref	Part Number	Qty	Name	Validity
1010	1649 8003 40	1	HOSE	**(19/04/2018 - 20/08/2018)** ((MOVOL:200V , MOVOL:230V , MOVOL:380V , MOVOL:460V , MOVOL:575V) + FREQ:60HZ , (MOVOL:200V , MOVOL:400V , MOVOL:500V) + FREQ:50HZ) + COOL:AIR **(21/08/2018 - ...)** ((MOVOL:200V , MOVOL:230V , MOVOL:575V) + COOL:AIR , MOVOL:380V , MOVOL:460V) + FREQ:60HZ , ((MOVOL:200V , MOVOL:500V) + COOL:AIR , MOVOL:400V) + FREQ:50HZ
1020	0580 0017 36	2	NIPPLE	**(06/12/2017 - 20/08/2018)** ((MOVOL:200V , MOVOL:230V , MOVOL:380V , MOVOL:460V , MOVOL:575V) + FREQ:60HZ , (MOVOL:200V , MOVOL:400V , MOVOL:500V) + FREQ:50HZ) + COOL:AIR **(21/08/2018 - ...)** ((MOVOL:200V , MOVOL:230V , MOVOL:575V) + COOL:AIR , MOVOL:380V , MOVOL:460V) + FREQ:60HZ , ((MOVOL:200V , MOVOL:500V) + COOL:AIR , MOVOL:400V) + FREQ:50HZ
1030	1649 8003 40	1	HOSE	**(19/04/2018 - 20/08/2018)** ((MOVOL:200V , MOVOL:230V , MOVOL:380V , MOVOL:460V , MOVOL:575V) + FREQ:60HZ , (MOVOL:200V , MOVOL:400V , MOVOL:500V) + FREQ:50HZ) + COOL:AIR **(21/08/2018 - ...)** ((MOVOL:200V , MOVOL:230V , MOVOL:575V) + COOL:AIR , MOVOL:380V , MOVOL:460V) + FREQ:60HZ , ((MOVOL:200V , MOVOL:500V) + COOL:AIR , MOVOL:400V) + FREQ:50HZ
2010	1625 2073 15	1	HOSE	**(06/12/2017 - 20/08/2018)** ((MOVOL:200V , MOVOL:230V , MOVOL:380V , MOVOL:460V , MOVOL:575V) + FREQ:60HZ , (MOVOL:200V , MOVOL:400V , MOVOL:500V) + FREQ:50HZ) + COOL:AIR **(21/08/2018 - ...)** ((MOVOL:200V , MOVOL:230V , MOVOL:575V) + COOL:AIR , MOVOL:380V , MOVOL:460V) + FREQ:60HZ , ((MOVOL:200V , MOVOL:500V) + COOL:AIR , MOVOL:400V) + FREQ:50HZ
2020	1625 4290 00	1	NIPPLE	**(06/12/2017 - 20/08/2018)** ((MOVOL:200V , MOVOL:230V , MOVOL:380V , MOVOL:460V , MOVOL:575V) + FREQ:60HZ , (MOVOL:200V , MOVOL:400V , MOVOL:500V) + FREQ:50HZ) + COOL:AIR **(21/08/2018 - ...)** ((MOVOL:200V , MOVOL:230V , MOVOL:575V) + COOL:AIR , MOVOL:380V , MOVOL:460V) + FREQ:60HZ , ((MOVOL:200V , MOVOL:500V) + COOL:AIR , MOVOL:400V) + FREQ:50HZ
2030	0663 3130 00	1	O-RING	**(06/12/2017 - 20/08/2018)** ((MOVOL:200V , MOVOL:230V , MOVOL:380V , MOVOL:460V , MOVOL:575V) + FREQ:60HZ , (MOVOL:200V , MOVOL:400V , MOVOL:500V) + FREQ:50HZ) + COOL:AIR **(21/08/2018 - ...)** ((MOVOL:200V , MOVOL:230V , MOVOL:575V) + COOL:AIR , MOVOL:380V , MOVOL:460V) + FREQ:60HZ , ((MOVOL:200V , MOVOL:500V) + COOL:AIR , MOVOL:400V) + FREQ:50HZ
3010	1625 2073 01	1	HOSE	**(06/12/2017 - 20/08/2018)** ((MOVOL:200V , MOVOL:230V , MOVOL:380V , MOVOL:460V , MOVOL:575V) + FREQ:60HZ , (MOVOL:200V , MOVOL:400V , MOVOL:500V) + FREQ:50HZ) + COOL:AIR **(21/08/2018 - ...)** ((MOVOL:200V , MOVOL:230V , MOVOL:575V) + COOL:AIR , MOVOL:380V , MOVOL:460V) + FREQ:60HZ , ((MOVOL:200V , MOVOL:500V) + COOL:AIR , MOVOL:400V) + FREQ:50HZ
3020	1625 4290 00	1	NIPPLE	**(06/12/2017 - 20/08/2018)** ((MOVOL:200V , MOVOL:230V , MOVOL:380V , MOVOL:460V , MOVOL:575V) + FREQ:60HZ , (MOVOL:200V , MOVOL:400V , MOVOL:500V) + FREQ:50HZ) + COOL:AIR **(21/08/2018 - ...)** ((MOVOL:200V , MOVOL:230V , MOVOL:575V) + COOL:AIR , MOVOL:380V , MOVOL:460V) + FREQ:60HZ , ((MOVOL:200V , MOVOL:500V) + COOL:AIR , MOVOL:400V) + FREQ:50HZ
3030	0663 3130 00	1	O-RING	**(06/12/2017 - 20/08/2018)** ((MOVOL:200V , MOVOL:230V , MOVOL:380V , MOVOL:460V , MOVOL:575V) + FREQ:60HZ , (MOVOL:200V , MOVOL:400V , MOVOL:500V) + FREQ:50HZ) + COOL:AIR **(21/08/2018 - ...)** ((MOVOL:200V , MOVOL:230V , MOVOL:575V) + COOL:AIR , MOVOL:380V , MOVOL:460V) + FREQ:60HZ , ((MOVOL:200V , MOVOL:500V) + COOL:AIR , MOVOL:400V) + FREQ:50HZ
4010	1649 8004 74	1	HOSE	**(21/08/2018 - ...)**
4020	1625 4288 00	1	NIPPLE	**(21/08/2018 - ...)**

Legend:

COOL:AIR - Cooling:Air cooled
COOL:WATER - Cooling:Water cooled
FREQ:50HZ - Frequency:50 Hz
FREQ:60HZ - Frequency:60 Hz
IDRY:N - Integrated dryer:No
MOVOL:200V - Supply voltage:200 V
MOVOL:230V - Supply voltage:230 V
MOVOL:380V - Supply voltage:380 V
MOVOL:400V - Supply voltage:400 V
MOVOL:460V - Supply voltage:460 V
MOVOL:500V - Supply voltage:500 V
MOVOL:575V - Supply voltage:575 V

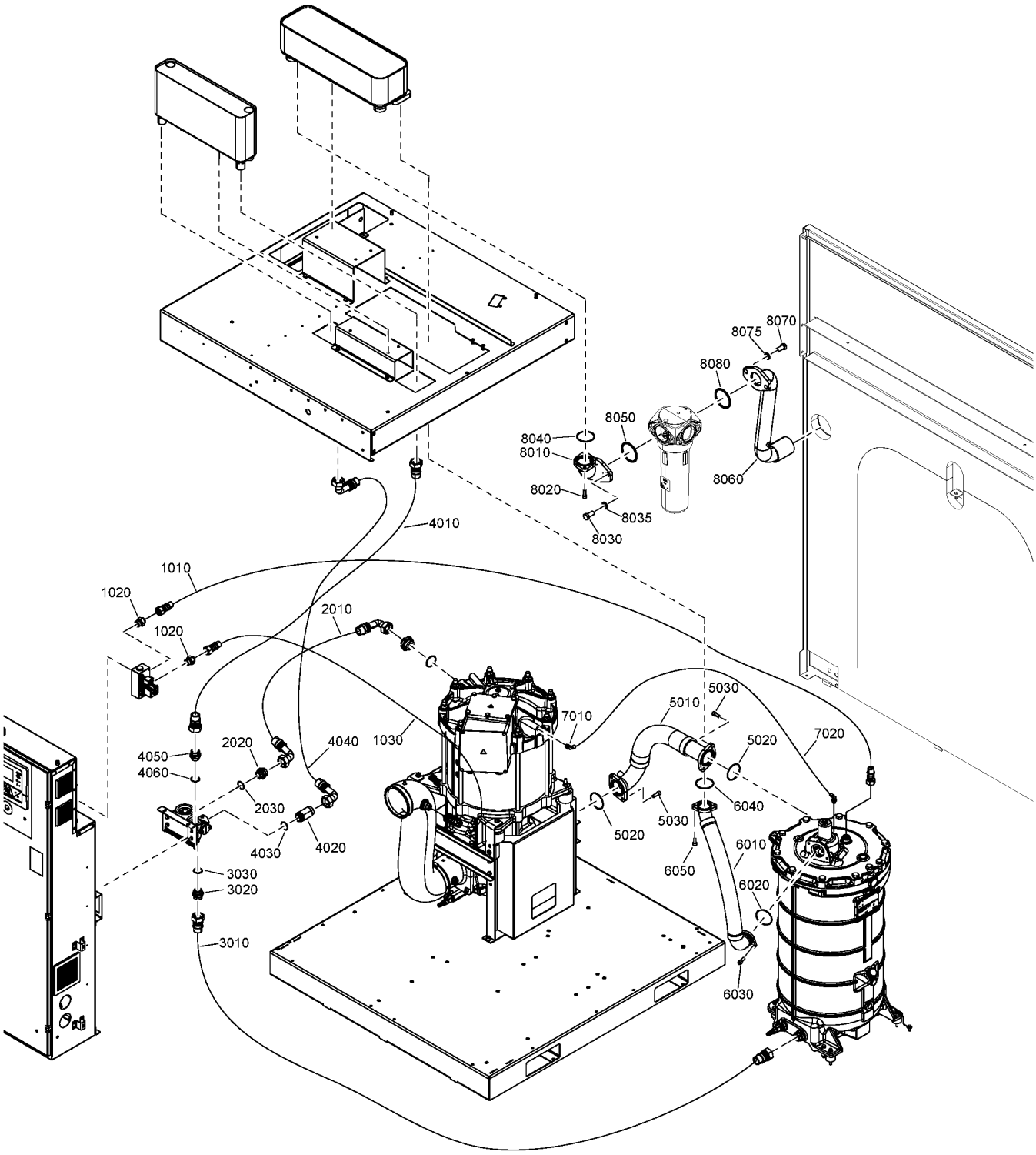
8070
8075
8080
8050
8040
8010
8020
8035
8030
8060
4010
1010
1020
1020
2010
5030
5010
7010
7020
5020
4050
4060
2020
4040
1030
2030
4030
4020
5020
5030
6040
6010
6050
6020
3030
3020
3010
6030

Ref	Part Number	Qty	Name	Validity
4030	0663 3130 00	1	O-RING	**(21/08/2018 - ...)**
4040	1625 2073 17	1	HOSE	**(12/02/2019 - ...)**
4050	1625 4290 00	1	NIPPLE	**(21/08/2018 - ...)**
4060	0663 3130 00	1	O-RING	**(21/08/2018 - ...)**
5010	1649 8001 80	1	HOSE	**(06/12/2017 - 20/08/2018)** ((MOVOL:200V , MOVOL:230V , MOVOL:380V , MOVOL:460V , MOVOL:575V) + FREQ:60HZ , (MOVOL:200V , MOVOL:400V , MOVOL:500V) + FREQ:50HZ) + COOL:AIR **(21/08/2018 - ...)** ((MOVOL:200V , MOVOL:230V , MOVOL:575V) + COOL:AIR , MOVOL:380V , MOVOL:460V) + FREQ:60HZ , ((MOVOL:200V , MOVOL:500V) + COOL:AIR , MOVOL:400V) + FREQ:50HZ
5020	0663 7138 00	2	O-RING	**(06/12/2017 - 20/08/2018)** ((MOVOL:200V , MOVOL:230V , MOVOL:380V , MOVOL:460V , MOVOL:575V) + FREQ:60HZ , (MOVOL:200V , MOVOL:400V , MOVOL:500V) + FREQ:50HZ) + COOL:AIR **(21/08/2018 - ...)** ((MOVOL:200V , MOVOL:230V , MOVOL:575V) + COOL:AIR , MOVOL:380V , MOVOL:460V) + FREQ:60HZ , ((MOVOL:200V , MOVOL:500V) + COOL:AIR , MOVOL:400V) + FREQ:50HZ
5030	0211 1363 03	4	SCREW	**(06/12/2017 - 20/08/2018)** ((MOVOL:200V , MOVOL:230V , MOVOL:380V , MOVOL:460V , MOVOL:575V) + FREQ:60HZ , (MOVOL:200V , MOVOL:400V , MOVOL:500V) + FREQ:50HZ) + COOL:AIR **(21/08/2018 - ...)** ((MOVOL:200V , MOVOL:230V , MOVOL:575V) + COOL:AIR , MOVOL:380V , MOVOL:460V) + FREQ:60HZ , ((MOVOL:200V , MOVOL:500V) + COOL:AIR , MOVOL:400V) + FREQ:50HZ
6010	1649 8004 46	1	HOSE	**(21/08/2018 - ...)**
6020	0663 7138 00	1	O-RING	**(21/08/2018 - ...)**
6030	0211 1363 03	2	SCREW	**(21/08/2018 - ...)**
6040	0663 7138 00	1	O-RING	**(21/08/2018 - ...)**
6050	0211 1363 03	2	SCREW	**(21/08/2018 - ...)**
7010	~~0583 8121 00~~	1	ELBOW	**(06/12/2017 - 20/08/2018)** ((MOVOL:200V , MOVOL:230V , MOVOL:380V , MOVOL:460V , MOVOL:575V) + FREQ:60HZ , (MOVOL:200V , MOVOL:400V , MOVOL:500V) + FREQ:50HZ) + COOL:AIR **(21/08/2018 - 30/12/2027)** ((MOVOL:200V , MOVOL:230V , MOVOL:575V) + COOL:AIR , MOVOL:380V , MOVOL:460V) + FREQ:60HZ , ((MOVOL:200V , MOVOL:500V) + COOL:AIR , MOVOL:400V) + FREQ:50HZ
	Substituted by:	0583 8121 58 - ELBOW G1/4 X 6 (quantity: 1)		
7020	~~0070 6002 68~~	AR	TUBE 4X6	**(06/12/2017 - 20/08/2018)** ((MOVOL:200V , MOVOL:230V , MOVOL:380V , MOVOL:460V , MOVOL:575V) + FREQ:60HZ , (MOVOL:200V , MOVOL:400V , MOVOL:500V) + FREQ:50HZ) + COOL:AIR **(21/08/2018 - ...)** ((MOVOL:200V , MOVOL:230V , MOVOL:575V) + COOL:AIR , MOVOL:380V , MOVOL:460V) + FREQ:60HZ , ((MOVOL:200V , MOVOL:500V) + COOL:AIR , MOVOL:400V) + FREQ:50HZ
	Substituted by:	0070 7250 04 - TUBE ID4 OD6 BLACK (quantity: 1)		
8010	1649 8004 69	1	PIPE	**(21/08/2018 - ...)**
8020	0211 1363 03	2	SCREW	**(21/08/2018 - ...)**
8030	0147 1474 03	2	HEXAGON BOLT	**(21/08/2018 - 06/05/2019)**
8030	0147 1476 03	2	HEXAGON BOLT	**(07/05/2019 - ...)**
8035	0301 2378 00	2	WASHER	**(07/05/2019 - ...)**
8040	0663 7138 00	1	O-RING	**(21/08/2018 - ...)**
8050	0663 3143 00	1	O-RING	**(21/08/2018 - ...)**
8060	1649 8004 68	1	OUTLET PIPE	**(21/08/2018 - ...)**
8070	0147 1476 03	2	HEXAGON BOLT	**(07/05/2019 - ...)**
8070	0147 1474 03	2	HEXAGON BOLT	**(21/08/2018 - 06/05/2019)**
8075	0301 2378 00	2	WASHER	**(07/05/2019 - ...)**
8080	0663 3143 00	1	O-RING	**(21/08/2018 - ...)**

Legend:

COOL:AIR - Cooling:Air cooled
COOL:WATER - Cooling:Water cooled
FREQ:50HZ - Frequency:50 Hz
FREQ:60HZ - Frequency:60 Hz
IDRY:N - Integrated dryer:No
MOVOL:200V - Supply voltage:200 V
MOVOL:230V - Supply voltage:230 V
MOVOL:380V - Supply voltage:380 V
MOVOL:400V - Supply voltage:400 V
MOVOL:460V - Supply voltage:460 V
MOVOL:500V - Supply voltage:500 V
MOVOL:575V - Supply voltage:575 V

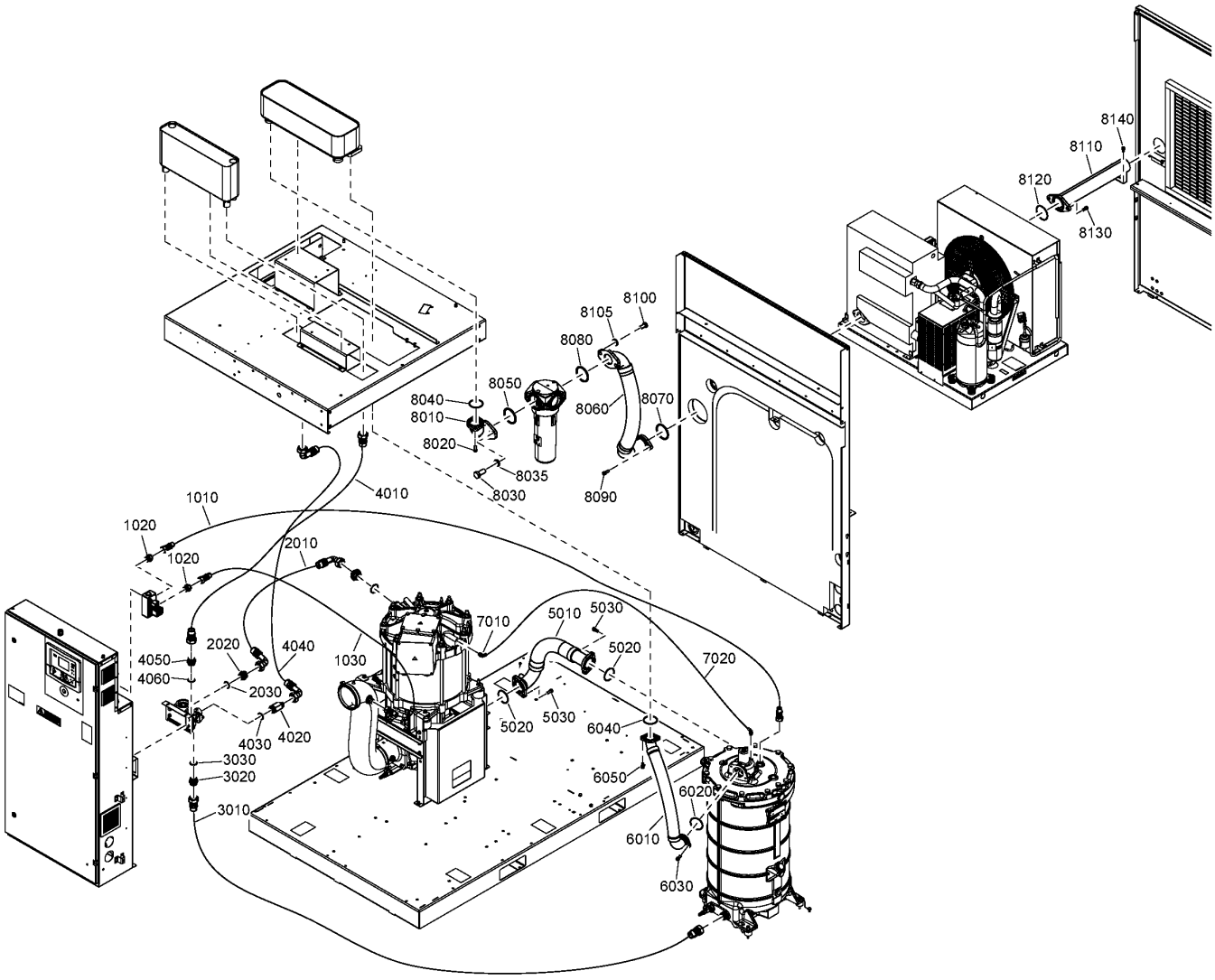
8140
8110
8120
8130
8100
8105
8080
8050
8040
8010
8020
8060
8070
8035
8030
8090
1010
4010
1020
1020
2010
7010
5010
5030
5020
7020
2020
4040
4050
4060
1030
2030
4030
4020
5020
5030
6040
3030
3020
3010
6050
6020
6010
6030

Ref	Part Number	Qty	Name	Validity
1010	1649 8003 40	1	HOSE	**(19/04/2018 - 20/08/2018)** ((MOVOL:200V , MOVOL:230V , MOVOL:380V , MOVOL:460V , MOVOL:575V) + FREQ:60HZ , (MOVOL:200V , MOVOL:400V , MOVOL:500V) + FREQ:50HZ) + COOL:AIR **(21/08/2018 - ...)** ((MOVOL:200V , MOVOL:230V , MOVOL:575V) + COOL:AIR , MOVOL:380V , MOVOL:460V) + FREQ:60HZ , ((MOVOL:200V , MOVOL:500V) + COOL:AIR , MOVOL:400V) + FREQ:50HZ
1020	0580 0017 36	2	NIPPLE	**(06/12/2017 - 20/08/2018)** ((MOVOL:200V , MOVOL:230V , MOVOL:380V , MOVOL:460V , MOVOL:575V) + FREQ:60HZ , (MOVOL:200V , MOVOL:400V , MOVOL:500V) + FREQ:50HZ) + COOL:AIR **(21/08/2018 - ...)** ((MOVOL:200V , MOVOL:230V , MOVOL:575V) + COOL:AIR , MOVOL:380V , MOVOL:460V) + FREQ:60HZ , ((MOVOL:200V , MOVOL:500V) + COOL:AIR , MOVOL:400V) + FREQ:50HZ
1030	1649 8003 40	1	HOSE	**(19/04/2018 - 20/08/2018)** ((MOVOL:200V , MOVOL:230V , MOVOL:380V , MOVOL:460V , MOVOL:575V) + FREQ:60HZ , (MOVOL:200V , MOVOL:400V , MOVOL:500V) + FREQ:50HZ) + COOL:AIR **(21/08/2018 - ...)** ((MOVOL:200V , MOVOL:230V , MOVOL:575V) + COOL:AIR , MOVOL:380V , MOVOL:460V) + FREQ:60HZ , ((MOVOL:200V , MOVOL:500V) + COOL:AIR , MOVOL:400V) + FREQ:50HZ
2010	1625 2073 15	1	HOSE	**(06/12/2017 - 20/08/2018)** ((MOVOL:200V , MOVOL:230V , MOVOL:380V , MOVOL:460V , MOVOL:575V) + FREQ:60HZ , (MOVOL:200V , MOVOL:400V , MOVOL:500V) + FREQ:50HZ) + COOL:AIR **(21/08/2018 - ...)** ((MOVOL:200V , MOVOL:230V , MOVOL:575V) + COOL:AIR , MOVOL:380V , MOVOL:460V) + FREQ:60HZ , ((MOVOL:200V , MOVOL:500V) + COOL:AIR , MOVOL:400V) + FREQ:50HZ
2020	1625 4290 00	1	NIPPLE	**(06/12/2017 - 20/08/2018)** ((MOVOL:200V , MOVOL:230V , MOVOL:380V , MOVOL:460V , MOVOL:575V) + FREQ:60HZ , (MOVOL:200V , MOVOL:400V , MOVOL:500V) + FREQ:50HZ) + COOL:AIR **(21/08/2018 - ...)** ((MOVOL:200V , MOVOL:230V , MOVOL:575V) + COOL:AIR , MOVOL:380V , MOVOL:460V) + FREQ:60HZ , ((MOVOL:200V , MOVOL:500V) + COOL:AIR , MOVOL:400V) + FREQ:50HZ
2030	0663 3130 00	1	O-RING	**(06/12/2017 - 20/08/2018)** ((MOVOL:200V , MOVOL:230V , MOVOL:380V , MOVOL:460V , MOVOL:575V) + FREQ:60HZ , (MOVOL:200V , MOVOL:400V , MOVOL:500V) + FREQ:50HZ) + COOL:AIR **(21/08/2018 - ...)** ((MOVOL:200V , MOVOL:230V , MOVOL:575V) + COOL:AIR , MOVOL:380V , MOVOL:460V) + FREQ:60HZ , ((MOVOL:200V , MOVOL:500V) + COOL:AIR , MOVOL:400V) + FREQ:50HZ
3010	1625 2073 01	1	HOSE	**(06/12/2017 - 20/08/2018)** ((MOVOL:200V , MOVOL:230V , MOVOL:380V , MOVOL:460V , MOVOL:575V) + FREQ:60HZ , (MOVOL:200V , MOVOL:400V , MOVOL:500V) + FREQ:50HZ) + COOL:AIR **(21/08/2018 - ...)** ((MOVOL:200V , MOVOL:230V , MOVOL:575V) + COOL:AIR , MOVOL:380V , MOVOL:460V) + FREQ:60HZ , ((MOVOL:200V , MOVOL:500V) + COOL:AIR , MOVOL:400V) + FREQ:50HZ
3020	1625 4290 00	1	NIPPLE	**(06/12/2017 - 20/08/2018)** ((MOVOL:200V , MOVOL:230V , MOVOL:380V , MOVOL:460V , MOVOL:575V) + FREQ:60HZ , (MOVOL:200V , MOVOL:400V , MOVOL:500V) + FREQ:50HZ) + COOL:AIR **(21/08/2018 - ...)** ((MOVOL:200V , MOVOL:230V , MOVOL:575V) + COOL:AIR , MOVOL:380V , MOVOL:460V) + FREQ:60HZ , ((MOVOL:200V , MOVOL:500V) + COOL:AIR , MOVOL:400V) + FREQ:50HZ
3030	0663 3130 00	1	O-RING	**(06/12/2017 - 20/08/2018)** ((MOVOL:200V , MOVOL:230V , MOVOL:380V , MOVOL:460V , MOVOL:575V) + FREQ:60HZ , (MOVOL:200V , MOVOL:400V , MOVOL:500V) + FREQ:50HZ) + COOL:AIR **(21/08/2018 - ...)** ((MOVOL:200V , MOVOL:230V , MOVOL:575V) + COOL:AIR , MOVOL:380V , MOVOL:460V) + FREQ:60HZ , ((MOVOL:200V , MOVOL:500V) + COOL:AIR , MOVOL:400V) + FREQ:50HZ
4010	1649 8004 74	1	HOSE	**(21/08/2018 - ...)**
4020	1625 4288 00	1	NIPPLE	**(21/08/2018 - ...)**

Legend:

COOL:AIR - Cooling:Air cooled
COOL:WATER - Cooling:Water cooled
FREQ:50HZ - Frequency:50 Hz
FREQ:60HZ - Frequency:60 Hz
IDRY:Y - Integrated dryer:Yes
MOVOL:200V - Supply voltage:200 V
MOVOL:230V - Supply voltage:230 V
MOVOL:380V - Supply voltage:380 V
MOVOL:400V - Supply voltage:400 V
MOVOL:460V - Supply voltage:460 V
MOVOL:500V - Supply voltage:500 V
MOVOL:575V - Supply voltage:575 V

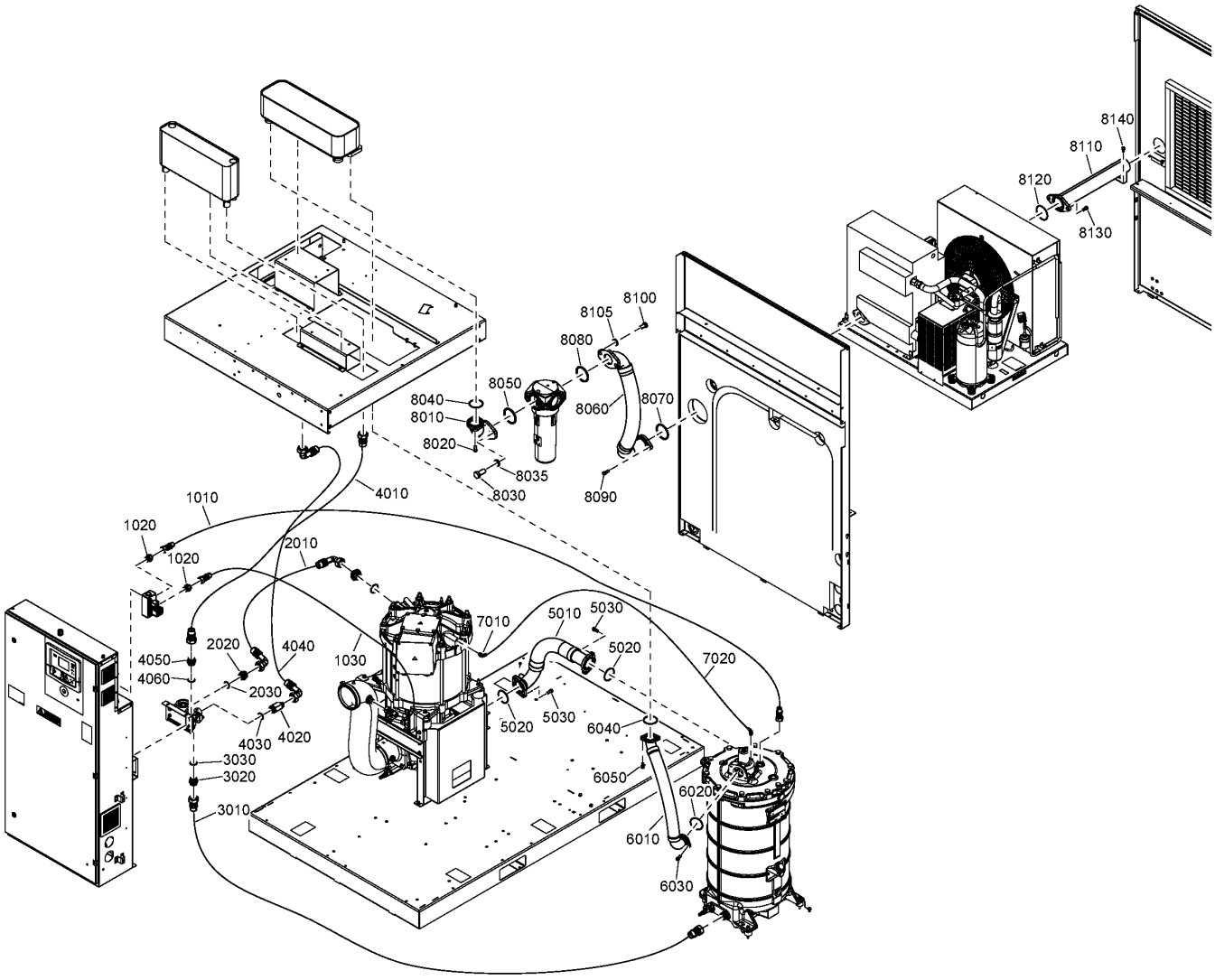
8140
8110
8120
8130
8100
8105
8080
8050
8040
8010
8020
8060
8070
8035
8030
8090
1010
4010
1020
1020
2010
7010
5010
5030
5020
7020
2020
4040
4050
4060
1030
2030
4030
4020
5020
5030
6040
3030
3020
3010
6050
6020
6010
6030

Ref	Part Number	Qty	Name	Validity
4030	0663 3130 00	1	O-RING	**(21/08/2018 - ...)**
4040	1625 2073 17	1	HOSE	**(12/02/2019 - ...)**
4050	1625 4290 00	1	NIPPLE	**(21/08/2018 - ...)**
4060	0663 3130 00	1	O-RING	**(21/08/2018 - ...)**
5010	1649 8001 80	1	HOSE	**(06/12/2017 - 20/08/2018)** ((MOVOL:200V , MOVOL:230V , MOVOL:380V , MOVOL:460V , MOVOL:575V) + FREQ:60HZ , (MOVOL:200V , MOVOL:400V , MOVOL:500V) + FREQ:50HZ) + COOL:AIR **(21/08/2018 - ...)** ((MOVOL:200V , MOVOL:230V , MOVOL:575V) + COOL:AIR , MOVOL:380V , MOVOL:460V) + FREQ:60HZ , ((MOVOL:200V , MOVOL:500V) + COOL:AIR , MOVOL:400V) + FREQ:50HZ
5020	0663 7138 00	2	O-RING	**(06/12/2017 - 20/08/2018)** ((MOVOL:200V , MOVOL:230V , MOVOL:380V , MOVOL:460V , MOVOL:575V) + FREQ:60HZ , (MOVOL:200V , MOVOL:400V , MOVOL:500V) + FREQ:50HZ) + COOL:AIR **(21/08/2018 - ...)** ((MOVOL:200V , MOVOL:230V , MOVOL:575V) + COOL:AIR , MOVOL:380V , MOVOL:460V) + FREQ:60HZ , ((MOVOL:200V , MOVOL:500V) + COOL:AIR , MOVOL:400V) + FREQ:50HZ
5030	0211 1363 03	4	SCREW	**(06/12/2017 - 20/08/2018)** ((MOVOL:200V , MOVOL:230V , MOVOL:380V , MOVOL:460V , MOVOL:575V) + FREQ:60HZ , (MOVOL:200V , MOVOL:400V , MOVOL:500V) + FREQ:50HZ) + COOL:AIR **(21/08/2018 - ...)** ((MOVOL:200V , MOVOL:230V , MOVOL:575V) + COOL:AIR , MOVOL:380V , MOVOL:460V) + FREQ:60HZ , ((MOVOL:200V , MOVOL:500V) + COOL:AIR , MOVOL:400V) + FREQ:50HZ
6010	1649 8004 46	1	HOSE	**(21/08/2018 - ...)**
6020	0663 7138 00	1	O-RING	**(21/08/2018 - ...)**
6030	0211 1363 03	2	SCREW	**(21/08/2018 - ...)**
6040	0663 7138 00	1	O-RING	**(21/08/2018 - ...)**
6050	0211 1363 03	2	SCREW	**(21/08/2018 - ...)**
7010	~~0583 8121 00~~	1	ELBOW	**(06/12/2017 - 20/08/2018)** ((MOVOL:200V , MOVOL:230V , MOVOL:380V , MOVOL:460V , MOVOL:575V) + FREQ:60HZ , (MOVOL:200V , MOVOL:400V , MOVOL:500V) + FREQ:50HZ) + COOL:AIR **(21/08/2018 - 30/12/2027)** ((MOVOL:200V , MOVOL:230V , MOVOL:575V) + COOL:AIR , MOVOL:380V , MOVOL:460V) + FREQ:60HZ , ((MOVOL:200V , MOVOL:500V) + COOL:AIR , MOVOL:400V) + FREQ:50HZ
	Substituted by:	0583 8121 58 - ELBOW G1/4 X 6 (quantity: 1)		
7020	~~0070 6002 68~~	AR	TUBE 4X6	**(06/12/2017 - 20/08/2018)** ((MOVOL:200V , MOVOL:230V , MOVOL:380V , MOVOL:460V , MOVOL:575V) + FREQ:60HZ , (MOVOL:200V , MOVOL:400V , MOVOL:500V) + FREQ:50HZ) + COOL:AIR **(21/08/2018 - ...)** ((MOVOL:200V , MOVOL:230V , MOVOL:575V) + COOL:AIR , MOVOL:380V , MOVOL:460V) + FREQ:60HZ , ((MOVOL:200V , MOVOL:500V) + COOL:AIR , MOVOL:400V) + FREQ:50HZ
	Substituted by:	0070 7250 04 - TUBE ID4 OD6 BLACK (quantity: 1)		
8010	1649 8004 69	1	PIPE	**(21/08/2018 - ...)**
8020	0211 1363 03	2	SCREW	**(21/08/2018 - ...)**
8030	0147 1476 03	2	HEXAGON BOLT	**(07/05/2019 - ...)**
8030	0147 1474 03	2	HEXAGON BOLT	**(21/08/2018 - 06/05/2019)**
8035	0301 2378 00	2	WASHER	**(07/05/2019 - ...)**
8040	0663 7138 00	1	O-RING	**(21/08/2018 - ...)**
8050	0663 3143 00	1	O-RING	**(21/08/2018 - ...)**
8060	1649 8004 45	1	HOSE	**(21/08/2018 - ...)**
8070	0663 7138 00	1	O-RING	**(21/08/2018 - ...)**
8080	0663 3143 00	1	O-RING	**(21/08/2018 - ...)**
8090	0211 1363 03	2	SCREW	**(21/08/2018 - ...)**
8100	0147 1474 03	2	HEXAGON BOLT	**(21/08/2018 - 06/05/2019)**

Legend:

COOL:AIR - Cooling:Air cooled
COOL:WATER - Cooling:Water cooled
FREQ:50HZ - Frequency:50 Hz
FREQ:60HZ - Frequency:60 Hz
IDRY:Y - Integrated dryer:Yes
MOVOL:200V - Supply voltage:200 V
MOVOL:230V - Supply voltage:230 V
MOVOL:380V - Supply voltage:380 V
MOVOL:400V - Supply voltage:400 V
MOVOL:460V - Supply voltage:460 V
MOVOL:500V - Supply voltage:500 V
MOVOL:575V - Supply voltage:575 V

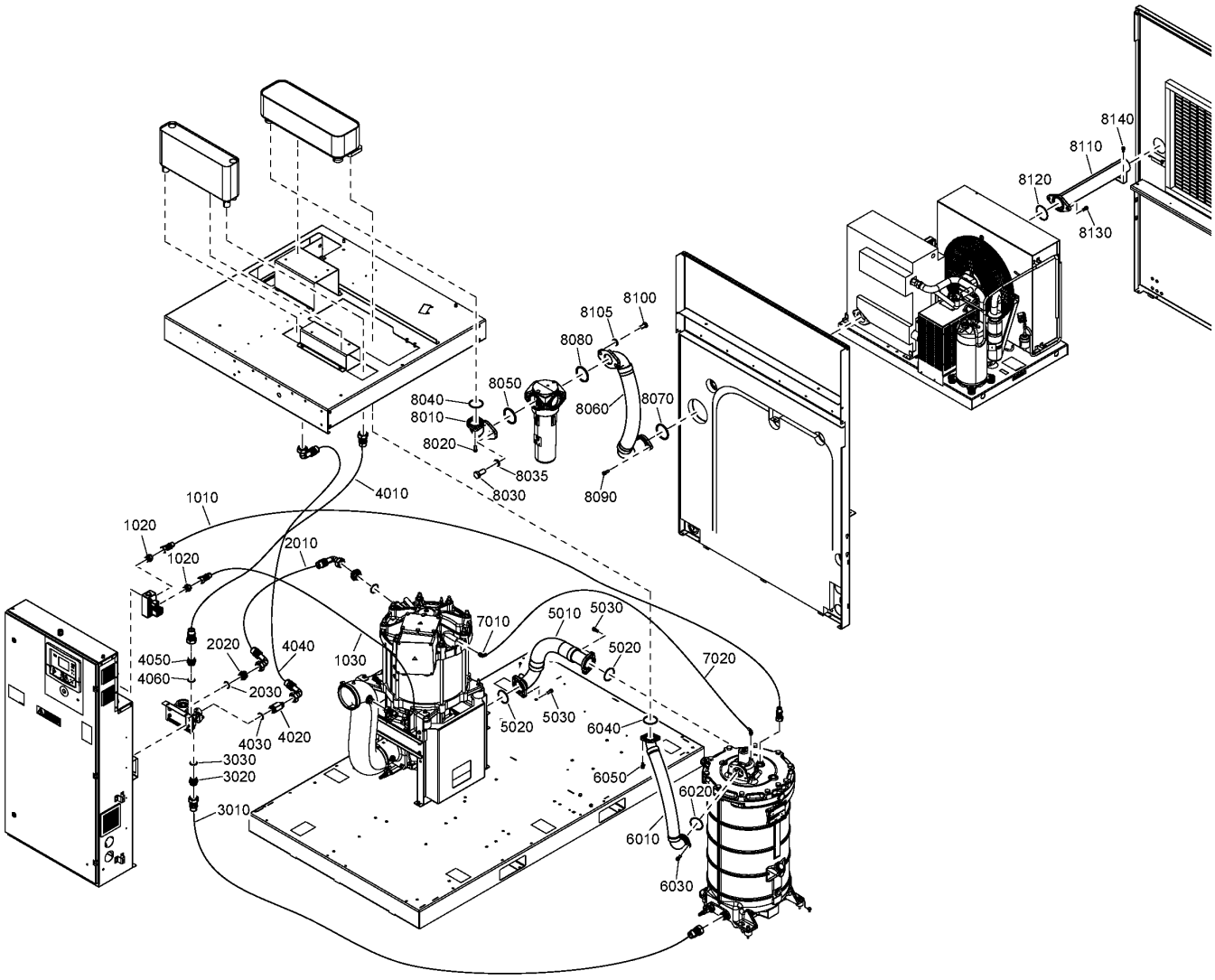
8140
8110
8120
8130
8100
8105
8080
8050
8040
8010
8020
8060
8070
8035
8030
8090
1010
4010
1020
1020
2010
7010
5010
5030
5020
7020
2020
4040
1030
4050
4060
2030
5020
5030
6040
4030
4020
3030
3020
6050
6020
3010
6010
6030

Ref	Part Number	Qty	Name	Validity
8100	0147 1476 03	2	HEXAGON BOLT	**(07/05/2019 - ...)**
8105	0301 2378 00	2	WASHER	**(07/05/2019 - ...)**
8110	1625 8217 00	1	PIPE	**(21/08/2018 - ...)**
8120	0663 2104 98	1	O-RING	**(21/08/2018 - ...)**
8130	0211 1363 03	2	SCREW	**(21/08/2018 - ...)**
8140	0147 1963 08	2	HEXAGON BOLT	**(21/08/2018 - ...)**

Legend:

COOL:AIR - Cooling:Air cooled
COOL:WATER - Cooling:Water cooled
FREQ:50HZ - Frequency:50 Hz
FREQ:60HZ - Frequency:60 Hz
IDRY:Y - Integrated dryer:Yes
MOVOL:200V - Supply voltage:200 V
MOVOL:230V - Supply voltage:230 V
MOVOL:380V - Supply voltage:380 V
MOVOL:400V - Supply voltage:400 V
MOVOL:460V - Supply voltage:460 V
MOVOL:500V - Supply voltage:500 V
MOVOL:575V - Supply voltage:575 V

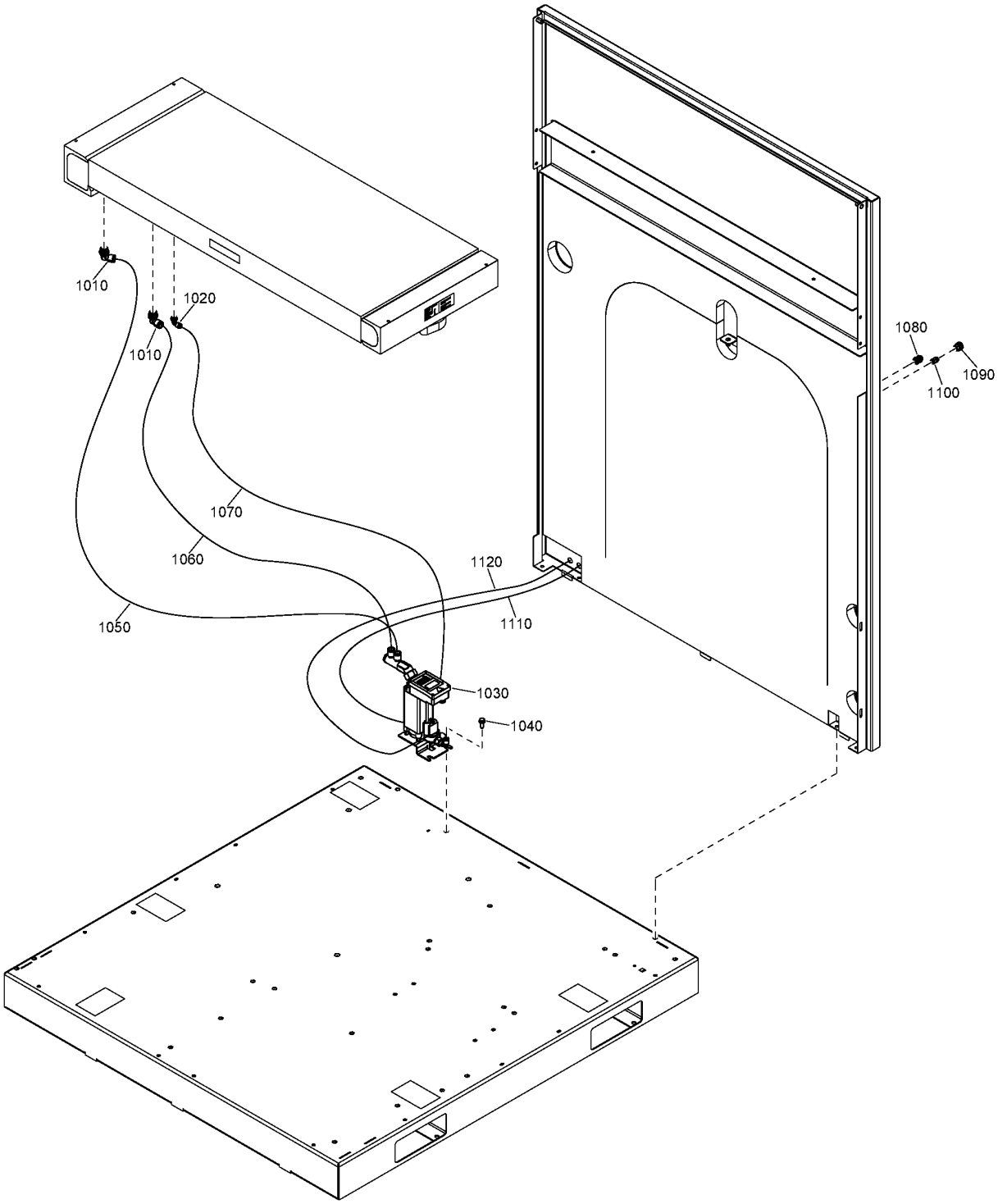
1010
1020
1010
1070
1060
1050
1120
1110
1030
1040
1080
1090
1100

Ref	Part Number	Qty	Name	Validity
1010	0583 8120 81	2	PIPE FITTING	**(02/03/2017 - 12/07/2017)** (FREQ:50HZ + MOVOL:400V , FREQ:60HZ + MOVOL:460V) **(13/07/2017 - 19/07/2017)** ((MOVOL:380V , MOVOL:460V) + FREQ:60HZ , FREQ:50HZ + MOVOL:400V) **(20/07/2017 - ...)**
1020	0583 8120 74	1	PIPE FITTING	**(02/03/2017 - 12/07/2017)** (FREQ:50HZ + MOVOL:400V , FREQ:60HZ + MOVOL:460V) **(13/07/2017 - 19/07/2017)** ((MOVOL:380V , MOVOL:460V) + FREQ:60HZ , FREQ:50HZ + MOVOL:400V) **(20/07/2017 - ...)**
1030	1649 8003 41	1	LD202 DRAIN	**(02/03/2017 - 12/07/2017)** (FREQ:50HZ + MOVOL:400V , FREQ:60HZ + MOVOL:460V) **(13/07/2017 - 19/07/2017)** ((MOVOL:380V , MOVOL:460V) + FREQ:60HZ , FREQ:50HZ + MOVOL:400V) **(20/07/2017 - ...)**
	• 2902 0161 02	1	LD DRAIN 4000H MAINTENANCE KIT	
	• ~~2902 0161 03~~	1	LD DRAIN 8000H MAINTENANCE KIT	
	Substituted by:	2200 9020 17 - KIT WEAR DRAIN (quantity: 1)		
1040	0147 1963 08	1	SCREW	**(02/03/2017 - 12/07/2017)** (FREQ:50HZ + MOVOL:400V , FREQ:60HZ + MOVOL:460V) **(13/07/2017 - 19/07/2017)** ((MOVOL:380V , MOVOL:460V) + FREQ:60HZ , FREQ:50HZ + MOVOL:400V) **(20/07/2017 - ...)**
1050	0070 6002 06	AR	TUBE	**(02/03/2017 - 12/07/2017)** (FREQ:50HZ + MOVOL:400V , FREQ:60HZ + MOVOL:460V) **(13/07/2017 - 19/07/2017)** ((MOVOL:380V , MOVOL:460V) + FREQ:60HZ , FREQ:50HZ + MOVOL:400V) **(20/07/2017 - ...)**
1060	0070 6002 06	AR	TUBE	**(02/03/2017 - 12/07/2017)** (FREQ:50HZ + MOVOL:400V , FREQ:60HZ + MOVOL:460V) **(13/07/2017 - 19/07/2017)** ((MOVOL:380V , MOVOL:460V) + FREQ:60HZ , FREQ:50HZ + MOVOL:400V) **(20/07/2017 - ...)**
1070	0070 6002 05	AR	TUBE	**(02/03/2017 - 12/07/2017)** (FREQ:50HZ + MOVOL:400V , FREQ:60HZ + MOVOL:460V) **(13/07/2017 - 19/07/2017)** ((MOVOL:380V , MOVOL:460V) + FREQ:60HZ , FREQ:50HZ + MOVOL:400V) **(20/07/2017 - ...)**
1080	0583 8100 70	1	PIPE FITTING	**(02/03/2017 - 12/07/2017)** (FREQ:50HZ + MOVOL:400V , FREQ:60HZ + MOVOL:460V) **(13/07/2017 - 19/07/2017)** ((MOVOL:380V , MOVOL:460V) + FREQ:60HZ , FREQ:50HZ + MOVOL:400V) **(20/07/2017 - ...)**
1090	0581 0000 43	1	BULKHEAD	**(02/03/2017 - 12/07/2017)** (FREQ:50HZ + MOVOL:400V , FREQ:60HZ + MOVOL:460V) **(13/07/2017 - 19/07/2017)** ((MOVOL:380V , MOVOL:460V) + FREQ:60HZ , FREQ:50HZ + MOVOL:400V) **(20/07/2017 - 30/12/2027)**
1100	0583 8100 66	1	FITTING	**(02/03/2017 - 12/07/2017)** (FREQ:50HZ + MOVOL:400V , FREQ:60HZ + MOVOL:460V) **(13/07/2017 - 19/07/2017)** ((MOVOL:380V , MOVOL:460V) + FREQ:60HZ , FREQ:50HZ + MOVOL:400V) **(20/07/2017 - ...)**
1110	0070 6002 04	AR	TUBE	**(02/03/2017 - 12/07/2017)** (FREQ:50HZ + MOVOL:400V , FREQ:60HZ + MOVOL:460V) **(13/07/2017 - 19/07/2017)** ((MOVOL:380V , MOVOL:460V) + FREQ:60HZ , FREQ:50HZ + MOVOL:400V) **(20/07/2017 - ...)**
1120	0070 6002 05	AR	TUBE	**(02/03/2017 - 12/07/2017)** (FREQ:50HZ + MOVOL:400V , FREQ:60HZ + MOVOL:460V) **(13/07/2017 - 19/07/2017)** ((MOVOL:380V , MOVOL:460V) + FREQ:60HZ , FREQ:50HZ + MOVOL:400V) **(20/07/2017 - ...)**

Legend:

COOL:AIR - Cooling:Air cooled
IDRY:N - Integrated dryer:No
MOVOL:230V - Supply voltage:230 V
MOVOL:460V - Supply voltage:460 V
FREQ:50HZ - Frequency:50 Hz
MODEL:GA75VP_16 - Model:GA 75VSD+
MOVOL:380V - Supply voltage:380 V
MOVOL:500V - Supply voltage:500 V
FREQ:60HZ - Frequency:60 Hz
MOVOL:200V - Supply voltage:200 V
MOVOL:400V - Supply voltage:400 V
MOVOL:575V - Supply voltage:575 V

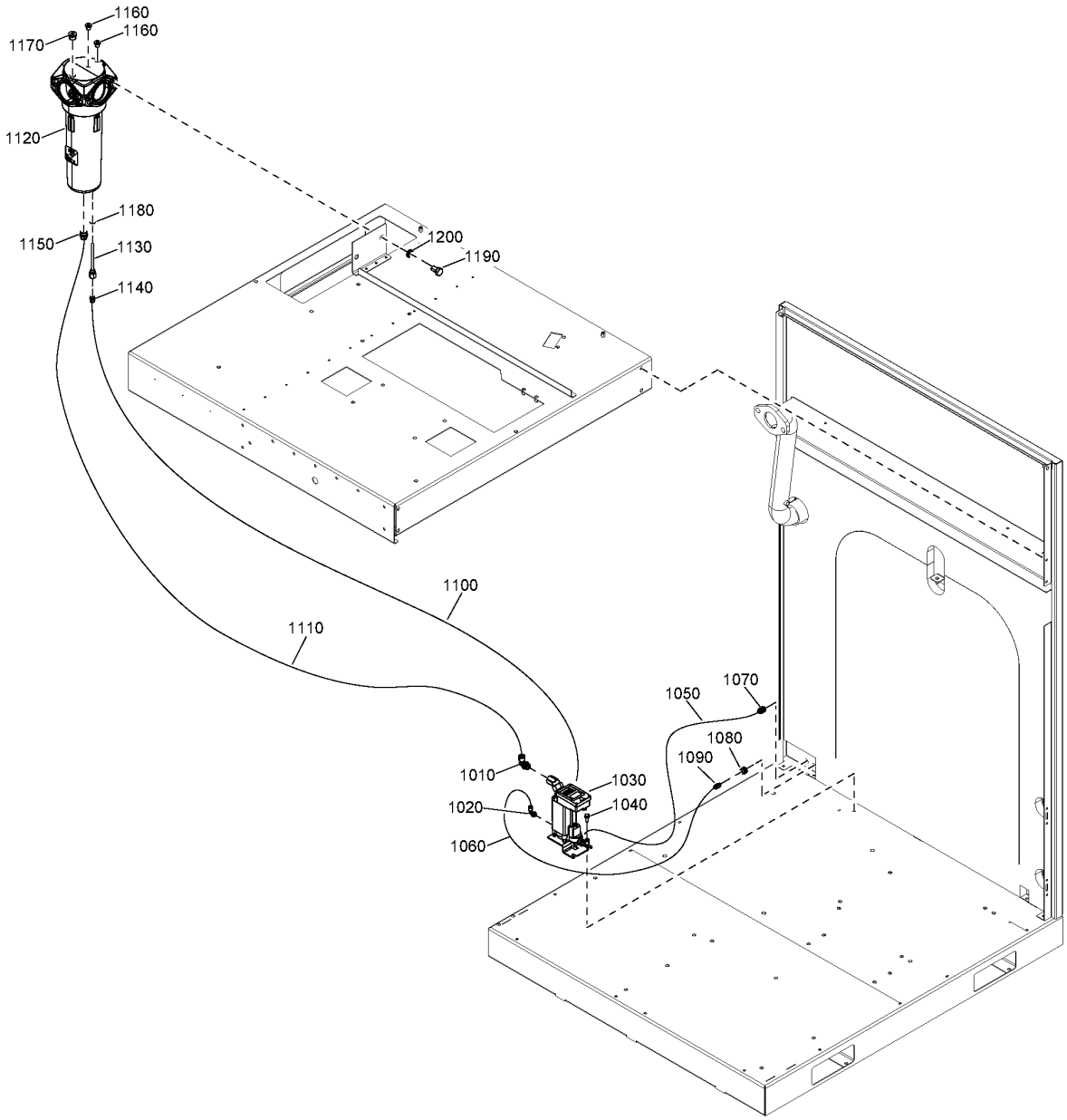
1160
1160
1170
1120
1180
1150
1130
1140
1200
1190
1100
1110
1070
1050
1080
1090
1010
1030
1020
1040
1060

Ref	Part Number	Qty	Name	Validity	R.
1010	0583 8120 81	1	ELBOW	(21/08/2018 - ...)	
1020	0583 8120 74	1	ELBOW	(21/08/2018 - ...)	
1030	1649 8003 41	1	LD202 DRAIN	(21/08/2018 - ...)	
	• 2902 0161 02	1	LD DRAIN 4000H MAINTENANCE KIT		
	• ~~2902 0161 03~~	1	LD DRAIN 8000H MAINTENANCE KIT		
	Substituted by:	2200 9020 17 - KIT WEAR DRAIN (quantity: 1)			
1040	0147 1963 08	1	HEXAGON BOLT	(21/08/2018 - ...)	
1050	0070 6002 06	AR	TUBE 8.5X12	(21/08/2018 - ...)	
1060	0070 6002 05	AR	TUBE 5.5X8	(21/08/2018 - ...)	
1070	0583 8100 70	1	PIPE FITTING	(21/08/2018 - ...)	
1080	0581 0000 43	1	BULKHEAD	(21/08/2018 - 30/12/2027)	
1090	0583 8100 66	1	FITTING	(21/08/2018 - ...)	
1100	0070 6002 04	AR	TUBE 4X6	(21/08/2018 - ...)	
1110	0070 6002 05	AR	TUBE 5.5X8	(21/08/2018 - ...)	
1120	1613 9370 83	1	WSD 250	(21/08/2018 - ...)	
	• 0663 6147 00	1	O-RING		Ø114.5x3
	• 0663 6136 00	1	O-RING		Ø59.5x3
	• 0663 2111 27	1	O-RING		Ø31.5x3
1130	1625 8228 02	1	PIPE	(01/02/2020 - ...)	
1130	~~1625 8282 00~~	1	PIPE	(21/08/2018 - 31/01/2020)	
	Substituted by:	1625 8228 02 - PIPE G 1/4 AX120 (quantity: 1)			
1140	0583 8100 69	1	PIPE FITTING	(21/08/2018 - ...)	
1150	0583 8100 71	1	PIPE FITTING	(21/08/2018 - ...)	
1160	0686 3718 15	2	PLUG	(21/08/2018 - ...)	
1170	0686 3718 17	1	PLUG	(21/08/2018 - ...)	
1180	0663 3119 00	1	O-RING	(21/08/2018 - ...)	
1190	0147 1474 03	2	HEXAGON BOLT	(21/08/2018 - ...)	
1200	0301 2378 00	2	WASHER	(07/05/2019 - ...)	

Legend:

COOL:WATER - Cooling:Water cooled
FREQ:50HZ - Frequency:50 Hz
FREQ:60HZ - Frequency:60 Hz
IDRY:N - Integrated dryer:No
MODEL:GA75VP_16 - Model:GA 75VSD+
MOVOL:380V - Supply voltage:380 V
MOVOL:400V - Supply voltage:400 V
MOVOL:460V - Supply voltage:460 V

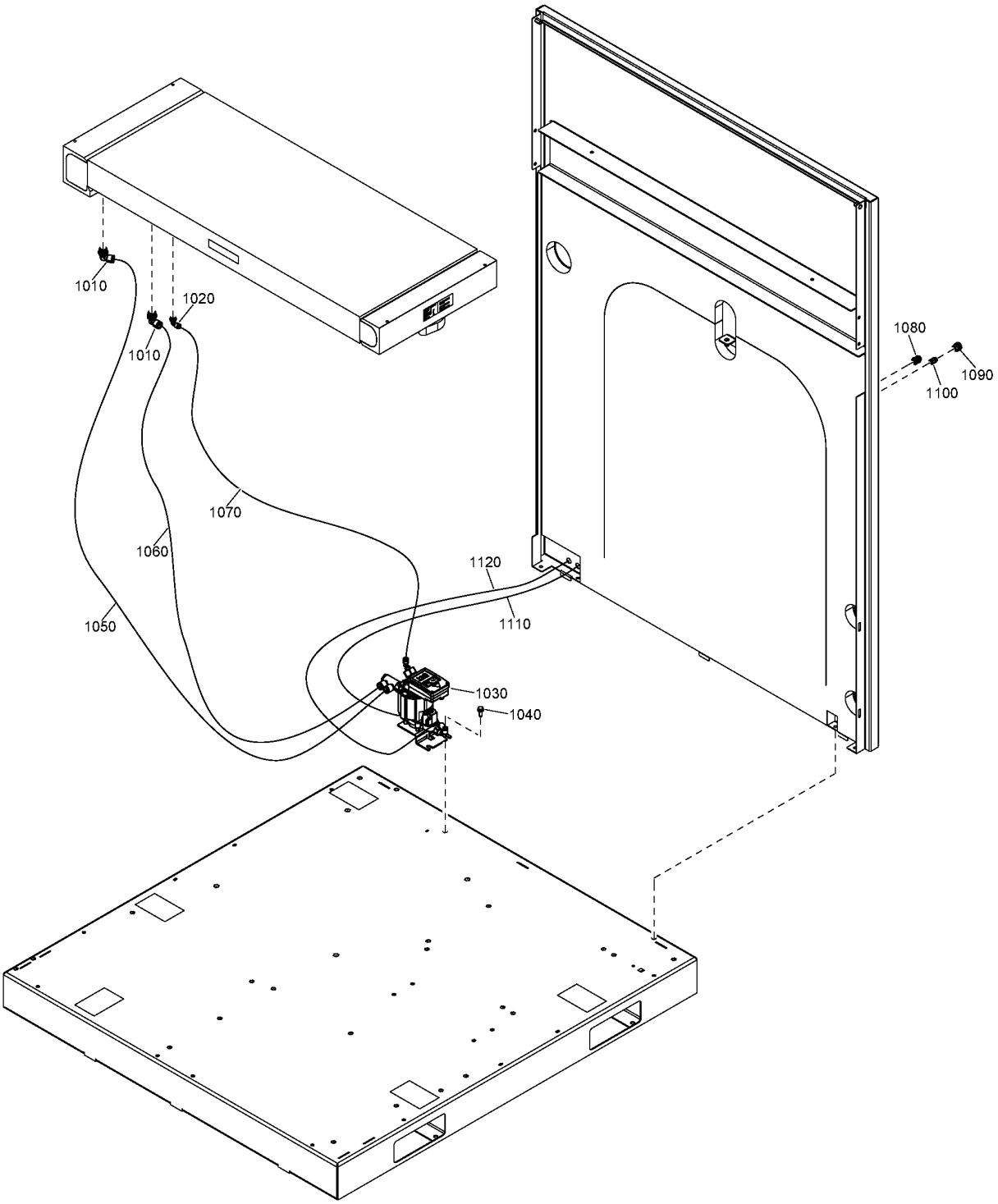
1010
1020
1010
1080
1090
1100
1070
1060
1120
1110
1050
1030
1040

Ref	Part Number	Qty	Name	Validity
1010	0583 8120 81	2	PIPE FITTING	**(02/03/2017 - 05/07/2017)** FREQ:50HZ + MODEL:GA110VP_16 + MOVOL:400V **(06/07/2017 - 12/07/2017)** FREQ:50HZ + MOVOL:400V **(13/07/2017 - 19/07/2017)** ((MOVOL:380V , MOVOL:460V) + FREQ:60HZ , FREQ:50HZ + MOVOL:400V) **(20/07/2017 - 30/12/2027)** **(31/12/2027 - ...)** ((MOVOL:380V , MOVOL:460V , MOVOL:575V) + FREQ:60HZ , (MOVOL:400V , MOVOL:500V) + FREQ:50HZ) + (MODEL:GA110VP_16 , MODEL:GA90VP_16) , (FREQ:60HZ + MOVOL:230V , MOVOL:200V) + MODEL:GA90VP_16
1020	0583 8120 74	1	PIPE FITTING	**(02/03/2017 - 05/07/2017)** FREQ:50HZ + MODEL:GA110VP_16 + MOVOL:400V **(06/07/2017 - 12/07/2017)** FREQ:50HZ + MOVOL:400V **(13/07/2017 - 19/07/2017)** ((MOVOL:380V , MOVOL:460V) + FREQ:60HZ , FREQ:50HZ + MOVOL:400V) **(20/07/2017 - 30/12/2027)** **(31/12/2027 - ...)** ((MOVOL:380V , MOVOL:460V , MOVOL:575V) + FREQ:60HZ , (MOVOL:400V , MOVOL:500V) + FREQ:50HZ) + (MODEL:GA110VP_16 , MODEL:GA90VP_16) , (FREQ:60HZ + MOVOL:230V , MOVOL:200V) + MODEL:GA90VP_16
1030	1649 8002 15	1	LD300 DRAIN	**(02/03/2017 - 05/07/2017)** FREQ:50HZ + MODEL:GA110VP_16 + MOVOL:400V **(06/07/2017 - 12/07/2017)** FREQ:50HZ + MOVOL:400V **(13/07/2017 - 19/07/2017)** ((MOVOL:380V , MOVOL:460V) + FREQ:60HZ , FREQ:50HZ + MOVOL:400V) **(20/07/2017 - 30/12/2027)** **(31/12/2027 - ...)** ((MOVOL:380V , MOVOL:460V , MOVOL:575V) + FREQ:60HZ , (MOVOL:400V , MOVOL:500V) + FREQ:50HZ) + (MODEL:GA110VP_16 , MODEL:GA90VP_16) , (FREQ:60HZ + MOVOL:230V , MOVOL:200V) + MODEL:GA90VP_16
	• 2902 0161 02	1	LD DRAIN 4000H MAINTENANCE KIT	
	• ~~2902 0161 03~~	1	LD DRAIN 8000H MAINTENANCE KIT	
	Substituted by:	2200 9020 17 - KIT WEAR DRAIN (quantity: 1)		
1040	0147 1963 08	1	SCREW	**(02/03/2017 - 05/07/2017)** FREQ:50HZ + MODEL:GA110VP_16 + MOVOL:400V **(06/07/2017 - 12/07/2017)** FREQ:50HZ + MOVOL:400V **(13/07/2017 - 19/07/2017)** ((MOVOL:380V , MOVOL:460V) + FREQ:60HZ , FREQ:50HZ + MOVOL:400V) **(20/07/2017 - 30/12/2027)** **(31/12/2027 - ...)** ((MOVOL:380V , MOVOL:460V , MOVOL:575V) + FREQ:60HZ , (MOVOL:400V , MOVOL:500V) + FREQ:50HZ) + (MODEL:GA110VP_16 , MODEL:GA90VP_16) , (FREQ:60HZ + MOVOL:230V , MOVOL:200V) + MODEL:GA90VP_16
1050	0070 6002 06	AR	TUBE 8.5X12	**(02/03/2017 - 05/07/2017)** FREQ:50HZ + MODEL:GA110VP_16 + MOVOL:400V **(06/07/2017 - 12/07/2017)** FREQ:50HZ + MOVOL:400V **(13/07/2017 - 19/07/2017)** ((MOVOL:380V , MOVOL:460V) + FREQ:60HZ , FREQ:50HZ + MOVOL:400V) **(20/07/2017 - 30/12/2027)** **(31/12/2027 - ...)** ((MOVOL:380V , MOVOL:460V , MOVOL:575V) + FREQ:60HZ , (MOVOL:400V , MOVOL:500V) + FREQ:50HZ) + (MODEL:GA110VP_16 , MODEL:GA90VP_16) , (FREQ:60HZ + MOVOL:230V , MOVOL:200V) + MODEL:GA90VP_16
1060	0070 6002 06	AR	TUBE 8.5X12	**(02/03/2017 - 05/07/2017)** FREQ:50HZ + MODEL:GA110VP_16 + MOVOL:400V **(06/07/2017 - 12/07/2017)** FREQ:50HZ + MOVOL:400V **(13/07/2017 - 19/07/2017)** ((MOVOL:380V , MOVOL:460V) + FREQ:60HZ , FREQ:50HZ + MOVOL:400V) **(20/07/2017 - 30/12/2027)** **(31/12/2027 - ...)** ((MOVOL:380V , MOVOL:460V , MOVOL:575V) + FREQ:60HZ , (MOVOL:400V , MOVOL:500V) + FREQ:50HZ) + (MODEL:GA110VP_16 , MODEL:GA90VP_16) , (FREQ:60HZ + MOVOL:230V , MOVOL:200V) + MODEL:GA90VP_16

Legend:

COOL:AIR - Cooling:Air cooled
IDRY:N - Integrated dryer:No
MOVOL:200V - Supply voltage:200 V
MOVOL:400V - Supply voltage:400 V
MOVOL:575V - Supply voltage:575 V
FREQ:50HZ - Frequency:50 Hz
MODEL:GA110VP_16 - Model:GA 110VSD+
MOVOL:230V - Supply voltage:230 V
MOVOL:460V - Supply voltage:460 V
FREQ:60HZ - Frequency:60 Hz
MODEL:GA90VP_16 - Model:GA 90VSD+
MOVOL:380V - Supply voltage:380 V
MOVOL:500V - Supply voltage:500 V

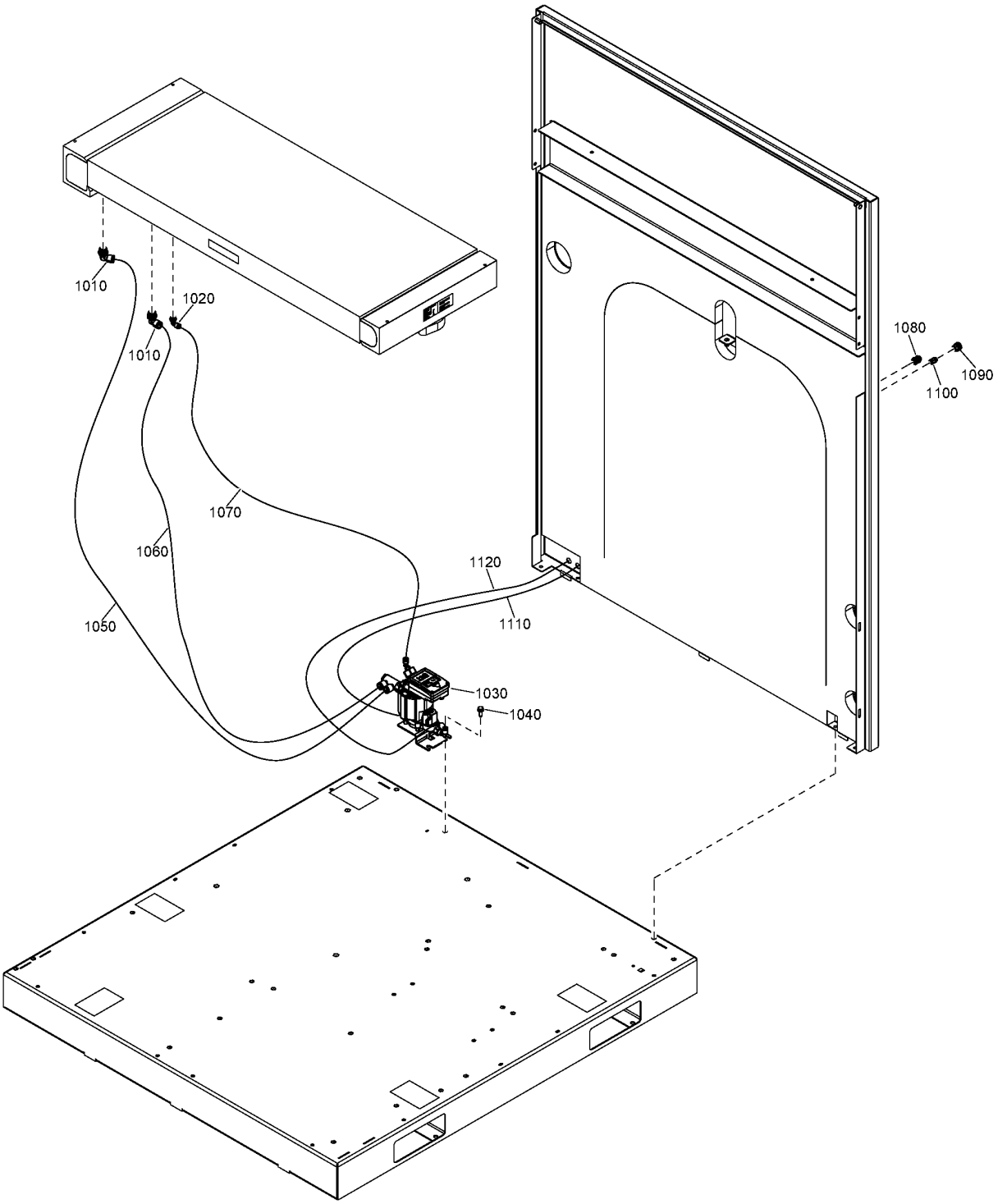
1010
1020
1010
1080
1090
1100
1070
1060
1120
1110
1050
1030
1040

Ref	Part Number	Qty	Name	Validity
1070	0070 6002 05	AR	TUBE 5.5X8	**(02/03/2017 - 05/07/2017)** FREQ:50HZ + MODEL:GA110VP_16 + MOVOL:400V **(06/07/2017 - 12/07/2017)** FREQ:50HZ + MOVOL:400V **(13/07/2017 - 19/07/2017)** ((MOVOL:380V , MOVOL:460V) + FREQ:60HZ , FREQ:50HZ + MOVOL:400V) **(20/07/2017 - 30/12/2027)** **(31/12/2027 - ...)** ((MOVOL:380V , MOVOL:460V , MOVOL:575V) + FREQ:60HZ , (MOVOL:400V , MOVOL:500V) + FREQ:50HZ) + (MODEL:GA110VP_16 , MODEL:GA90VP_16) , (FREQ:60HZ + MOVOL:230V , MOVOL:200V) + MODEL:GA90VP_16
1080	0583 8100 70	1	PIPE FITTING	**(02/03/2017 - 05/07/2017)** FREQ:50HZ + MODEL:GA110VP_16 + MOVOL:400V **(06/07/2017 - 12/07/2017)** FREQ:50HZ + MOVOL:400V **(13/07/2017 - 19/07/2017)** ((MOVOL:380V , MOVOL:460V) + FREQ:60HZ , FREQ:50HZ + MOVOL:400V) **(20/07/2017 - 30/12/2027)** **(31/12/2027 - ...)** ((MOVOL:380V , MOVOL:460V , MOVOL:575V) + FREQ:60HZ , (MOVOL:400V , MOVOL:500V) + FREQ:50HZ) + (MODEL:GA110VP_16 , MODEL:GA90VP_16) , (FREQ:60HZ + MOVOL:230V , MOVOL:200V) + MODEL:GA90VP_16
1090	0581 0000 43	1	BULKHEAD	**(02/03/2017 - 05/07/2017)** FREQ:50HZ + MODEL:GA110VP_16 + MOVOL:400V **(06/07/2017 - 12/07/2017)** FREQ:50HZ + MOVOL:400V **(13/07/2017 - 19/07/2017)** ((MOVOL:380V , MOVOL:460V) + FREQ:60HZ , FREQ:50HZ + MOVOL:400V) **(20/07/2017 - 30/12/2027)**
1100	0583 8100 66	1	FITTING	**(02/03/2017 - 05/07/2017)** FREQ:50HZ + MODEL:GA110VP_16 + MOVOL:400V **(06/07/2017 - 12/07/2017)** FREQ:50HZ + MOVOL:400V **(13/07/2017 - 19/07/2017)** ((MOVOL:380V , MOVOL:460V) + FREQ:60HZ , FREQ:50HZ + MOVOL:400V) **(20/07/2017 - 30/12/2027)** **(31/12/2027 - ...)** ((MOVOL:380V , MOVOL:460V , MOVOL:575V) + FREQ:60HZ , (MOVOL:400V , MOVOL:500V) + FREQ:50HZ) + (MODEL:GA110VP_16 , MODEL:GA90VP_16) , (FREQ:60HZ + MOVOL:230V , MOVOL:200V) + MODEL:GA90VP_16
1110	0070 6002 04	AR	TUBE 4X6	**(02/03/2017 - 05/07/2017)** FREQ:50HZ + MODEL:GA110VP_16 + MOVOL:400V **(06/07/2017 - 12/07/2017)** FREQ:50HZ + MOVOL:400V **(13/07/2017 - 19/07/2017)** ((MOVOL:380V , MOVOL:460V) + FREQ:60HZ , FREQ:50HZ + MOVOL:400V) **(20/07/2017 - 30/12/2027)** **(31/12/2027 - ...)** ((MOVOL:380V , MOVOL:460V , MOVOL:575V) + FREQ:60HZ , (MOVOL:400V , MOVOL:500V) + FREQ:50HZ) + (MODEL:GA110VP_16 , MODEL:GA90VP_16) , (FREQ:60HZ + MOVOL:230V , MOVOL:200V) + MODEL:GA90VP_16
1120	0070 6002 05	AR	TUBE 5.5X8	**(02/03/2017 - 05/07/2017)** FREQ:50HZ + MODEL:GA110VP_16 + MOVOL:400V **(06/07/2017 - 12/07/2017)** FREQ:50HZ + MOVOL:400V **(13/07/2017 - 19/07/2017)** ((MOVOL:380V , MOVOL:460V) + FREQ:60HZ , FREQ:50HZ + MOVOL:400V) **(20/07/2017 - 30/12/2027)** **(31/12/2027 - ...)** ((MOVOL:380V , MOVOL:460V , MOVOL:575V) + FREQ:60HZ , (MOVOL:400V , MOVOL:500V) + FREQ:50HZ) + (MODEL:GA110VP_16 , MODEL:GA90VP_16) , (FREQ:60HZ + MOVOL:230V , MOVOL:200V) + MODEL:GA90VP_16

Legend:

COOL:AIR - Cooling:Air cooled
IDRY:N - Integrated dryer:No
MOVOL:200V - Supply voltage:200 V
MOVOL:400V - Supply voltage:400 V
MOVOL:575V - Supply voltage:575 V
FREQ:50HZ - Frequency:50 Hz
MODEL:GA110VP_16 - Model:GA 110VSD+
MOVOL:230V - Supply voltage:230 V
MOVOL:460V - Supply voltage:460 V
FREQ:60HZ - Frequency:60 Hz
MODEL:GA90VP_16 - Model:GA 90VSD+
MOVOL:380V - Supply voltage:380 V
MOVOL:500V - Supply voltage:500 V

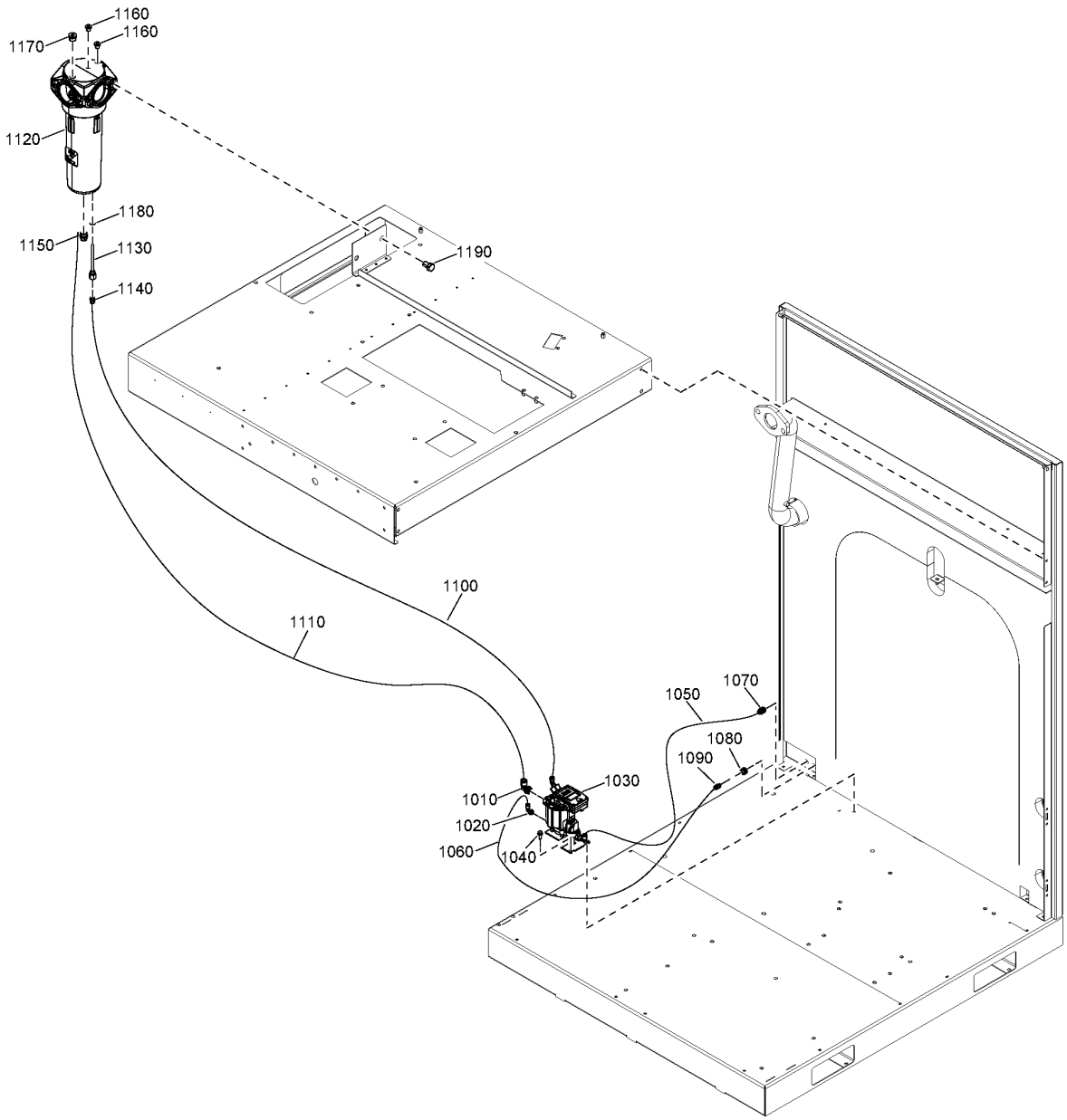
1160
1160
1170
1120
1180
1150
1130
1140
1190
1100
1110
1070
1050
1080
1090
1030
1010
1020
1060
1040

Ref	Part Number	Qty	Name	Validity	R.
1010	0583 8120 81	1	ELBOW	(21/08/2018 - ...)	
1020	0583 8120 74	1	ELBOW	(21/08/2018 - ...)	
1030	1649 8002 15	1	LD203 DRAIN	(21/08/2018 - ...)	
	• 2902 0161 02	1	LD DRAIN 4000H MAINTENANCE KIT		
	• ~~2902 0161 03~~	1	LD DRAIN 8000H MAINTENANCE KIT		
	Substituted by:	2200 9020 17 - KIT WEAR DRAIN (quantity: 1)			
1040	0147 1963 08	1	HEXAGON BOLT	(21/08/2018 - ...)	
1050	0070 6002 06	AR	TUBE 8.5X12	(21/08/2018 - ...)	
1060	0070 6002 05	AR	TUBE 5.5X8	(21/08/2018 - ...)	
1070	0583 8100 70	1	PIPE FITTING	(21/08/2018 - ...)	
1080	0581 0000 43	1	BULKHEAD	(21/08/2018 - 30/12/2027)	
1090	0583 8100 66	1	FITTING	(21/08/2018 - ...)	
1100	0070 6002 04	AR	TUBE 4X6	(21/08/2018 - ...)	
1110	0070 6002 05	AR	TUBE 5.5X8	(21/08/2018 - ...)	
1120	1613 9370 83	1	WSD 250	(21/08/2018 - ...)	
	• 0663 6147 00	1	O-RING		Ø114.5x3
	• 0663 6136 00	1	O-RING		Ø59.5x3
	• 0663 2111 27	1	O-RING		Ø31.5x3
1130	~~1625 8282 00~~	1	PIPE	(21/08/2018 - 31/01/2020)	
	Substituted by:	1625 8228 02 - PIPE G 1/4 AX120 (quantity: 1)			
1130	1625 8228 02	1	PIPE	(01/02/2020 - ...)	
1140	0583 8100 69	1	PIPE FITTING	(21/08/2018 - ...)	
1150	0583 8100 71	1	PIPE FITTING	(21/08/2018 - ...)	
1160	0686 3718 15	2	PLUG	(21/08/2018 - ...)	
1170	0686 3718 17	1	PLUG	(21/08/2018 - ...)	
1180	0663 3119 00	1	O-RING	(21/08/2018 - ...)	
1190	0147 1474 03	2	HEXAGON BOLT	(21/08/2018 - ...)	

Legend:

COOL:WATER - Cooling:Water cooled
IDRY:N - Integrated dryer:No
MOVOL:380V - Supply voltage:380 V
FREQ:50HZ - Frequency:50 Hz
MODEL:GA110VP_16 - Model:GA 110VSD+
MOVOL:400V - Supply voltage:400 V
FREQ:60HZ - Frequency:60 Hz
MODEL:GA90VP_16 - Model:GA 90VSD+
MOVOL:460V - Supply voltage:460 V

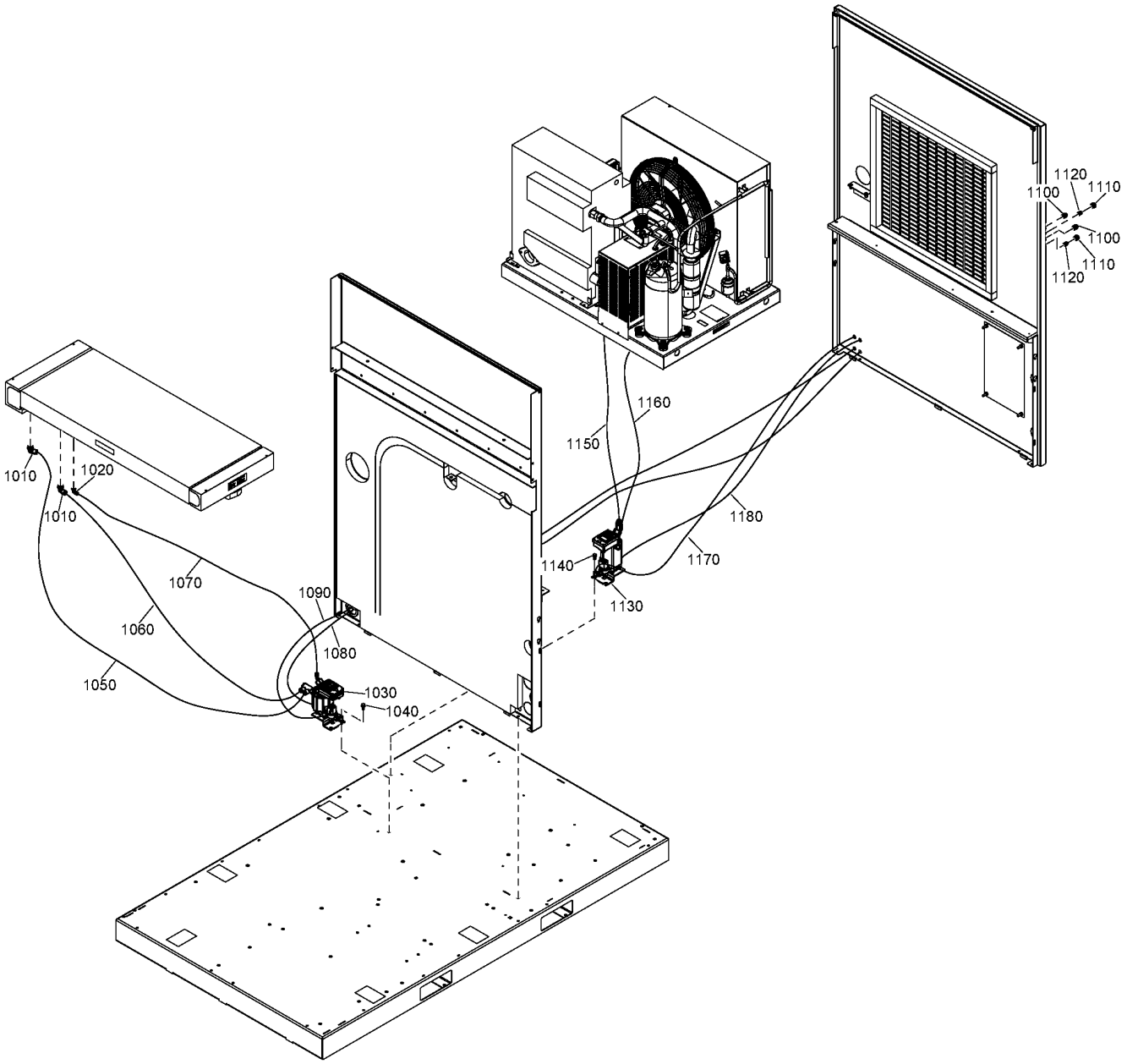
1120
1110
1100
1100
1110
1120
1160
1150
1010
1020
1010
1180
1140
1170
1070
1090
1130
1060
1080
1050
1030
1040

Ref	Part Number	Qty	Name	Validity
1010	0583 8120 81	2	PIPE FITTING	**(02/03/2017 - 12/07/2017)** FREQ:50HZ + MOVOL:400V **(13/07/2017 - 19/07/2017)** ((MOVOL:380V , MOVOL:460V) + FREQ:60HZ , FREQ:50HZ + MOVOL:400V) **(20/07/2017 - ...)**
1020	0583 8120 74	1	PIPE FITTING	**(02/03/2017 - 12/07/2017)** FREQ:50HZ + MOVOL:400V **(13/07/2017 - 19/07/2017)** ((MOVOL:380V , MOVOL:460V) + FREQ:60HZ , FREQ:50HZ + MOVOL:400V) **(20/07/2017 - ...)**
1030	1649 8003 41	1	LD202 DRAIN	**(02/03/2017 - 12/07/2017)** FREQ:50HZ + MOVOL:400V **(13/07/2017 - 19/07/2017)** ((MOVOL:380V , MOVOL:460V) + FREQ:60HZ , FREQ:50HZ + MOVOL:400V) **(20/07/2017 - ...)**
	• 2902 0161 02	1	LD DRAIN 4000H MAINTENANCE KIT	
	• ~~2902 0161 03~~	1	LD DRAIN 8000H MAINTENANCE KIT	
	Substituted by:	2200 9020 17 - KIT WEAR DRAIN (quantity: 1)		
1040	0147 1963 08	1	SCREW	**(02/03/2017 - 12/07/2017)** FREQ:50HZ + MOVOL:400V **(13/07/2017 - 19/07/2017)** ((MOVOL:380V , MOVOL:460V) + FREQ:60HZ , FREQ:50HZ + MOVOL:400V) **(20/07/2017 - ...)**
1050	0070 6002 06	AR	TUBE 8.5X12	**(02/03/2017 - 12/07/2017)** FREQ:50HZ + MOVOL:400V **(13/07/2017 - 19/07/2017)** ((MOVOL:380V , MOVOL:460V) + FREQ:60HZ , FREQ:50HZ + MOVOL:400V) **(20/07/2017 - ...)**
1060	0070 6002 06	AR	TUBE 8.5X12	**(02/03/2017 - 12/07/2017)** FREQ:50HZ + MOVOL:400V **(13/07/2017 - 19/07/2017)** ((MOVOL:380V , MOVOL:460V) + FREQ:60HZ , FREQ:50HZ + MOVOL:400V) **(20/07/2017 - ...)**
1070	0070 6002 05	AR	TUBE 5.5X8	**(02/03/2017 - 12/07/2017)** FREQ:50HZ + MOVOL:400V **(13/07/2017 - 19/07/2017)** ((MOVOL:380V , MOVOL:460V) + FREQ:60HZ , FREQ:50HZ + MOVOL:400V) **(20/07/2017 - ...)**
1080	0070 6002 04	AR	TUBE 4X6	**(02/03/2017 - 12/07/2017)** FREQ:50HZ + MOVOL:400V **(13/07/2017 - 19/07/2017)** ((MOVOL:380V , MOVOL:460V) + FREQ:60HZ , FREQ:50HZ + MOVOL:400V) **(20/07/2017 - ...)**
1090	0070 6002 05	AR	TUBE 5.5X8	**(02/03/2017 - 12/07/2017)** FREQ:50HZ + MOVOL:400V **(13/07/2017 - 19/07/2017)** ((MOVOL:380V , MOVOL:460V) + FREQ:60HZ , FREQ:50HZ + MOVOL:400V) **(20/07/2017 - ...)**
1100	0583 8100 70	2	PIPE FITTING	**(02/03/2017 - 12/07/2017)** FREQ:50HZ + MOVOL:400V **(13/07/2017 - 19/07/2017)** ((MOVOL:380V , MOVOL:460V) + FREQ:60HZ , FREQ:50HZ + MOVOL:400V) **(20/07/2017 - ...)**
1110	0581 0000 43	2	BULKHEAD	**(02/03/2017 - 12/07/2017)** FREQ:50HZ + MOVOL:400V **(13/07/2017 - 19/07/2017)** ((MOVOL:380V , MOVOL:460V) + FREQ:60HZ , FREQ:50HZ + MOVOL:400V) **(20/07/2017 - 30/12/2027)**
1120	0583 8100 66	2	FITTING	**(02/03/2017 - 12/07/2017)** FREQ:50HZ + MOVOL:400V **(13/07/2017 - 19/07/2017)** ((MOVOL:380V , MOVOL:460V) + FREQ:60HZ , FREQ:50HZ + MOVOL:400V) **(20/07/2017 - ...)**
1130	1649 8003 42	1	LD202 DRAIN	**(02/03/2017 - 12/07/2017)** FREQ:50HZ + MOVOL:400V **(13/07/2017 - 19/07/2017)** ((MOVOL:380V , MOVOL:460V) + FREQ:60HZ , FREQ:50HZ + MOVOL:400V) **(20/07/2017 - ...)**
	• ~~2902 0161 03~~	1	LD DRAIN 8000H MAINTENANCE KIT	
	Substituted by:	2200 9020 17 - KIT WEAR DRAIN (quantity: 1)		
	• 2902 0161 02	1	LD DRAIN 4000H MAINTENANCE KIT	
1140	0147 1963 08	1	SCREW	**(02/03/2017 - 12/07/2017)** FREQ:50HZ + MOVOL:400V **(13/07/2017 - 19/07/2017)** ((MOVOL:380V , MOVOL:460V) + FREQ:60HZ , FREQ:50HZ + MOVOL:400V) **(20/07/2017 - ...)**
1150	0070 6002 06	AR	TUBE 8.5X12	**(02/03/2017 - 12/07/2017)** FREQ:50HZ + MOVOL:400V **(13/07/2017 - 19/07/2017)** ((MOVOL:380V , MOVOL:460V) + FREQ:60HZ , FREQ:50HZ + MOVOL:400V) **(20/07/2017 - ...)**
1160	0070 6002 05	AR	TUBE 5.5X8	**(02/03/2017 - 12/07/2017)** FREQ:50HZ + MOVOL:400V **(13/07/2017 - 19/07/2017)** ((MOVOL:380V , MOVOL:460V) + FREQ:60HZ , FREQ:50HZ + MOVOL:400V) **(20/07/2017 - ...)**

Legend:

COOL:AIR - Cooling:Air cooled
IDRY:Y - Integrated dryer:Yes
MOVOL:230V - Supply voltage:230 V
MOVOL:460V - Supply voltage:460 V
FREQ:50HZ - Frequency:50 Hz
MODEL:GA75VP_16 - Model:GA 75VSD+
MOVOL:380V - Supply voltage:380 V
MOVOL:500V - Supply voltage:500 V
FREQ:60HZ - Frequency:60 Hz
MOVOL:200V - Supply voltage:200 V
MOVOL:400V - Supply voltage:400 V
MOVOL:575V - Supply voltage:575 V

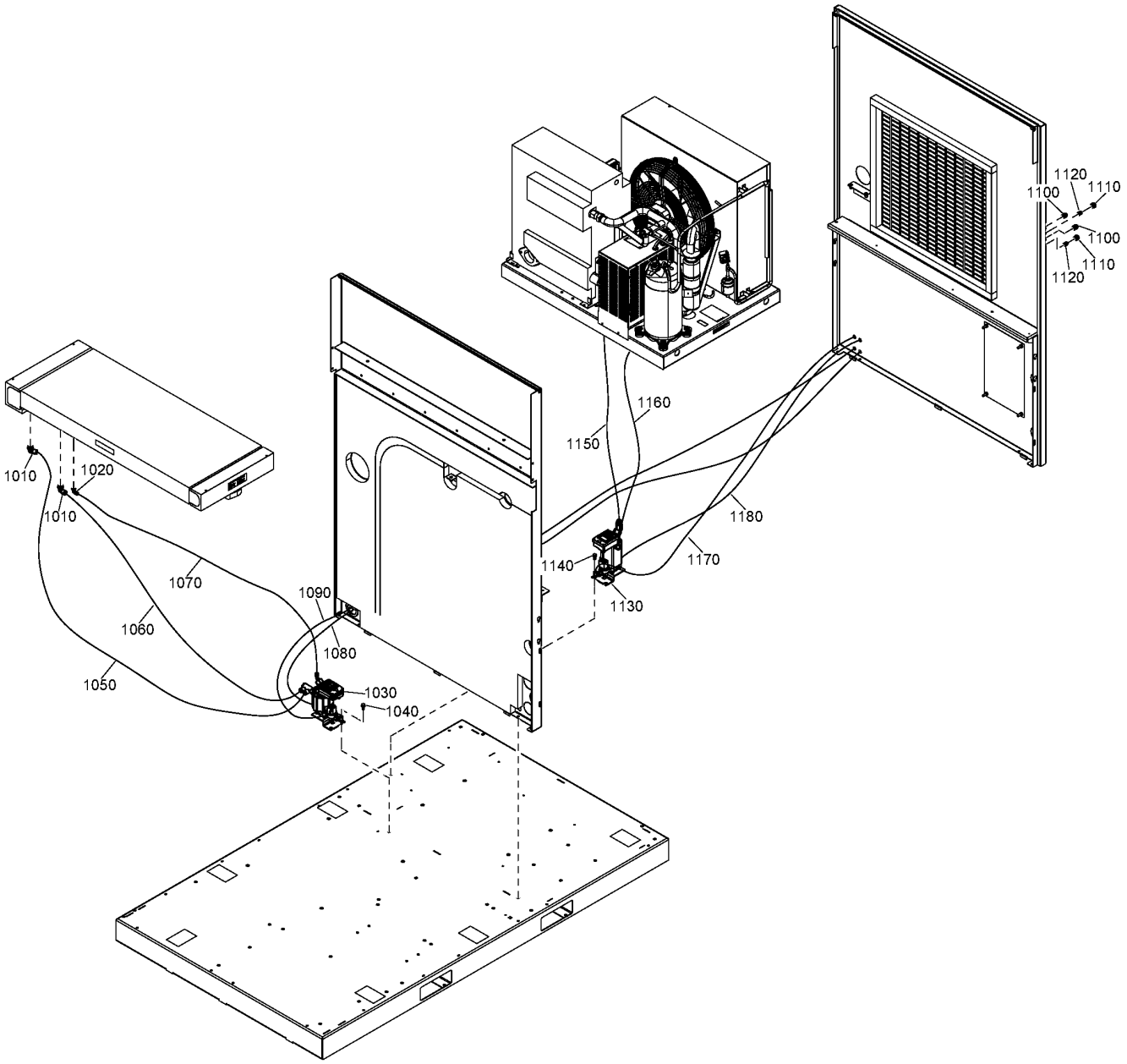
1120
1110
1100
1100
1110
1120
1160
1150
1010
1020
1010
1180
1140
1170
1070
1090
1130
1060
1080
1050
1030
1040

Ref	Part Number	Qty	Name	Validity
1170	0070 6002 05	AR	TUBE 5.5X8	**(02/03/2017 - 12/07/2017)** FREQ:50HZ + MOVOL:400V **(13/07/2017 - 19/07/2017)** ((MOVOL:380V , MOVOL:460V) + FREQ:60HZ , FREQ:50HZ + MOVOL:400V) **(20/07/2017 - ...)**
1180	0070 6002 04	AR	TUBE 4X6	**(02/03/2017 - 12/07/2017)** FREQ:50HZ + MOVOL:400V **(13/07/2017 - 19/07/2017)** ((MOVOL:380V , MOVOL:460V) + FREQ:60HZ , FREQ:50HZ + MOVOL:400V) **(20/07/2017 - ...)**

Legend:

COOL:AIR - Cooling:Air cooled	FREQ:50HZ - Frequency:50 Hz	FREQ:60HZ - Frequency:60 Hz
IDRY:Y - Integrated dryer:Yes	MODEL:GA75VP_16 - Model:GA 75VSD+	MOVOL:200V - Supply voltage:200 V
MOVOL:230V - Supply voltage:230 V	MOVOL:380V - Supply voltage:380 V	MOVOL:400V - Supply voltage:400 V
MOVOL:460V - Supply voltage:460 V	MOVOL:500V - Supply voltage:500 V	MOVOL:575V - Supply voltage:575 V

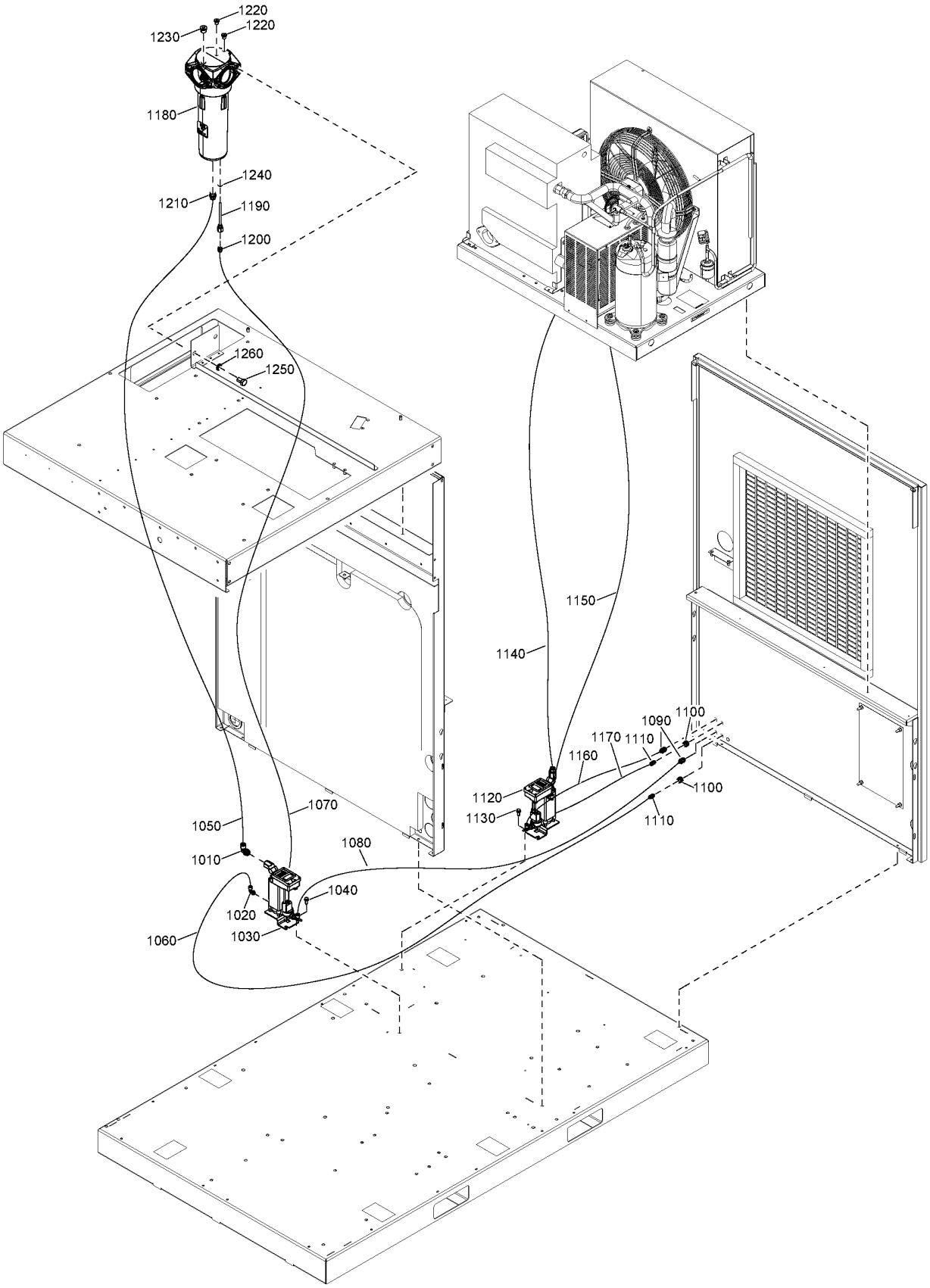
1220
1220
1230
1180
1240
1210
1190
1200
1260
1250
1150
1140
1090
1100
1170
1110
1160
1100
1120
1130
1110
1070
1050
1080
1010
1040
1020
1030
1060

Ref	Part Number	Qty	Name	Validity	R.
1010	0583 8120 81	1	ELBOW	(21/08/2018 - ...)	
1020	0583 8120 74	1	ELBOW	(21/08/2018 - ...)	
1030	1649 8003 41	1	LD202 DRAIN	(21/08/2018 - ...)	
	• 2902 0161 02	1	LD DRAIN 4000H MAINTENANCE KIT		
	• ~~2902 0161 03~~	1	LD DRAIN 8000H MAINTENANCE KIT		
	Substituted by:	2200 9020 17 - KIT WEAR DRAIN (quantity: 1)			
1040	0147 1963 08	1	HEXAGON BOLT	(21/08/2018 - ...)	
1050	0070 6002 06	AR	TUBE 8.5X12	(21/08/2018 - ...)	
1060	0070 6002 05	AR	TUBE 5.5X8	(21/08/2018 - ...)	
1070	0070 6002 04	AR	TUBE 4X6	(21/08/2018 - ...)	
1080	0070 6002 05	AR	TUBE 5.5X8	(21/08/2018 - ...)	
1090	0583 8100 70	2	PIPE FITTING	(21/08/2018 - ...)	
1100	0581 0000 43	2	BULKHEAD	(21/08/2018 - 30/12/2027)	
1110	0583 8100 66	2	FITTING	(21/08/2018 - ...)	
1120	1649 8003 42	1	LD202 DRAIN	(21/08/2018 - ...)	
	• 2902 0161 02	1	LD DRAIN 4000H MAINTENANCE KIT		
	• ~~2902 0161 03~~	1	LD DRAIN 8000H MAINTENANCE KIT		
	Substituted by:	2200 9020 17 - KIT WEAR DRAIN (quantity: 1)			
1130	0147 1963 08	1	HEXAGON BOLT	(21/08/2018 - ...)	
1140	0070 6002 06	AR	TUBE 8.5X12	(21/08/2018 - ...)	
1150	0070 6002 05	AR	TUBE 5.5X8	(21/08/2018 - ...)	
1160	0070 6002 05	AR	TUBE 5.5X8	(21/08/2018 - ...)	
1170	0070 6002 04	AR	TUBE 4X6	(21/08/2018 - ...)	
1180	1613 9370 83	1	WSD 250	(21/08/2018 - ...)	
	• 0663 6147 00	1	O-RING		Ø114.5x3
	• 0663 6136 00	1	O-RING		Ø59.5x3
	• 0663 2111 27	1	O-RING		Ø31.5x3
1190	~~1625 8282 00~~	1	PIPE	(21/08/2018 - 31/01/2020)	
	Substituted by:	1625 8228 02 - PIPE G 1/4 AX120 (quantity: 1)			
1190	1625 8228 02	1	PIPE	(01/02/2020 - ...)	
1200	0583 8100 69	1	PIPE FITTING	(21/08/2018 - ...)	
1210	0583 8100 71	1	PIPE FITTING	(21/08/2018 - ...)	
1220	0686 3718 15	2	PLUG	(21/08/2018 - ...)	
1230	0686 3718 17	1	PLUG	(21/08/2018 - ...)	
1240	0663 3119 00	1	O-RING	(21/08/2018 - ...)	
1250	0147 1474 03	2	HEXAGON BOLT	(21/08/2018 - ...)	
1260	0301 2378 00	2	WASHER	(07/05/2019 - ...)	

Legend:

COOL:WATER - Cooling:Water cooled
IDRY:Y - Integrated dryer:Yes
MOVOL:400V - Supply voltage:400 V
FREQ:50HZ - Frequency:50 Hz
MODEL:GA75VP_16 - Model:GA 75VSD+
MOVOL:460V - Supply voltage:460 V
FREQ:60HZ - Frequency:60 Hz
MOVOL:380V - Supply voltage:380 V

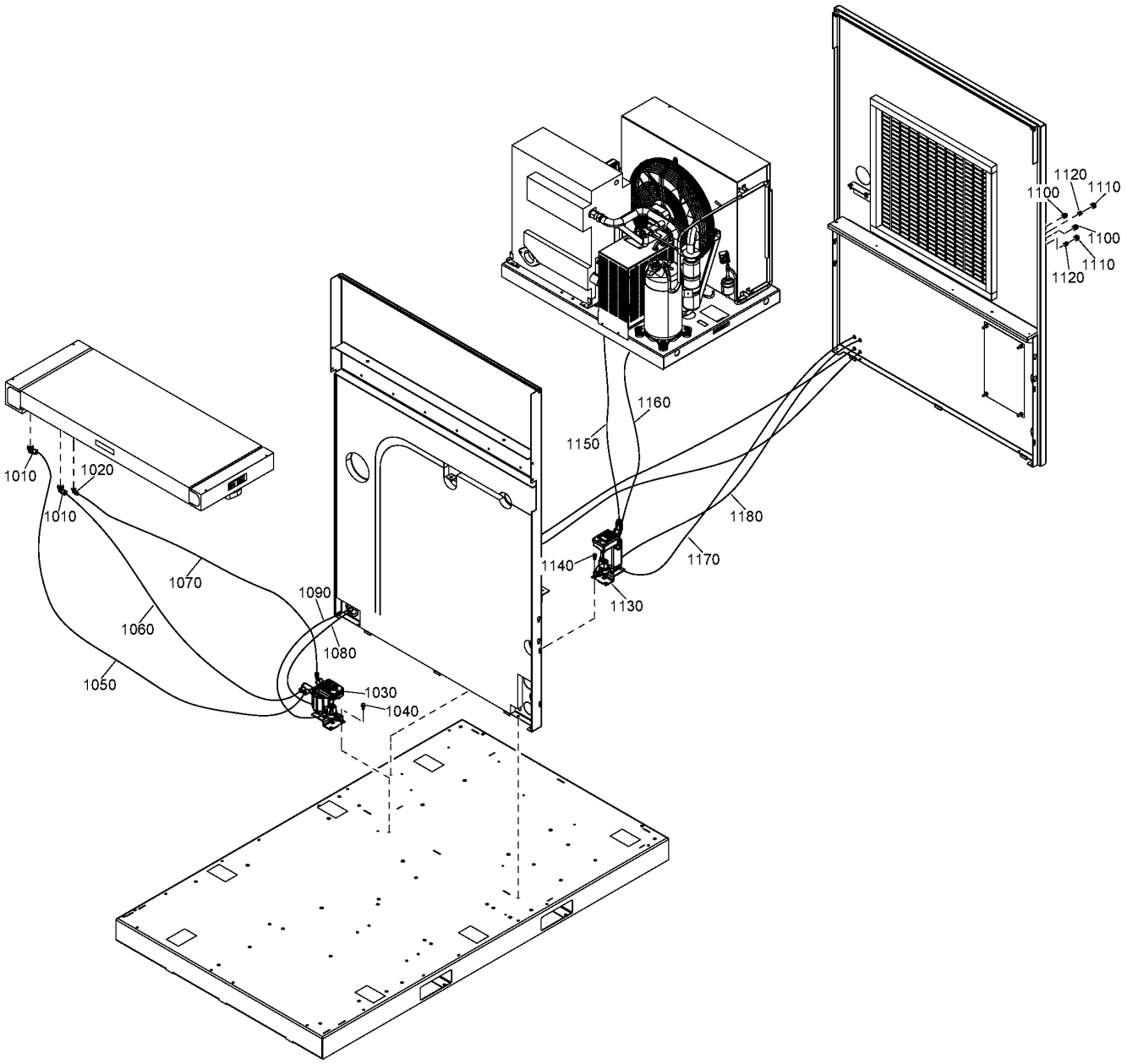
1120
1110
1100
1100
1110
1120
1160
1150
1010
1020
1010
1180
1140
1170
1070
1090
1130
1060
1080
1050
1030
1040

Ref	Part Number	Qty	Name	Validity
1010	0583 8120 81	2	PIPE FITTING	**(02/03/2017 - 12/07/2017)** ((MOVOL:380V , MOVOL:575V) + FREQ:60HZ , FREQ:50HZ + MOVOL:400V) + MODEL:GA110VP_16 **(13/07/2017 - 30/12/2027)** **(31/12/2027 - ...)** ((MOVOL:380V , MOVOL:460V , MOVOL:575V) + FREQ:60HZ , (MOVOL:400V , MOVOL:500V) + FREQ:50HZ) + (MODEL:GA110VP_16 , MODEL:GA90VP_16) , (FREQ:60HZ + MOVOL:230V , MOVOL:200V) + MODEL:GA90VP_16
1020	0583 8120 74	1	PIPE FITTING	**(02/03/2017 - 12/07/2017)** ((MOVOL:380V , MOVOL:575V) + FREQ:60HZ , FREQ:50HZ + MOVOL:400V) + MODEL:GA110VP_16 **(13/07/2017 - 30/12/2027)** **(31/12/2027 - ...)** ((MOVOL:380V , MOVOL:460V , MOVOL:575V) + FREQ:60HZ , (MOVOL:400V , MOVOL:500V) + FREQ:50HZ) + (MODEL:GA110VP_16 , MODEL:GA90VP_16) , (FREQ:60HZ + MOVOL:230V , MOVOL:200V) + MODEL:GA90VP_16
1030	1649 8002 15	1	LD300 DRAIN	**(02/03/2017 - 12/07/2017)** ((MOVOL:380V , MOVOL:575V) + FREQ:60HZ , FREQ:50HZ + MOVOL:400V) + MODEL:GA110VP_16 **(13/07/2017 - 30/12/2027)** **(31/12/2027 - ...)** ((MOVOL:380V , MOVOL:460V , MOVOL:575V) + FREQ:60HZ , (MOVOL:400V , MOVOL:500V) + FREQ:50HZ) + (MODEL:GA110VP_16 , MODEL:GA90VP_16) , (FREQ:60HZ + MOVOL:230V , MOVOL:200V) + MODEL:GA90VP_16
	• 2902 0161 02	1	LD DRAIN 4000H MAINTENANCE KIT	
	• ~~2902 0161 03~~	1	LD DRAIN 8000H MAINTENANCE KIT	
	Substituted by:	2200 9020 17 - KIT WEAR DRAIN (quantity: 1)		
1040	0147 1963 08	1	SCREW	**(02/03/2017 - 12/07/2017)** ((MOVOL:380V , MOVOL:575V) + FREQ:60HZ , FREQ:50HZ + MOVOL:400V) + MODEL:GA110VP_16 **(13/07/2017 - 30/12/2027)** **(31/12/2027 - ...)** ((MOVOL:380V , MOVOL:460V , MOVOL:575V) + FREQ:60HZ , (MOVOL:400V , MOVOL:500V) + FREQ:50HZ) + (MODEL:GA110VP_16 , MODEL:GA90VP_16) , (FREQ:60HZ + MOVOL:230V , MOVOL:200V) + MODEL:GA90VP_16
1050	0070 6002 06	AR	TUBE 8.5X12	**(02/03/2017 - 12/07/2017)** ((MOVOL:380V , MOVOL:575V) + FREQ:60HZ , FREQ:50HZ + MOVOL:400V) + MODEL:GA110VP_16 **(13/07/2017 - 30/12/2027)** **(31/12/2027 - ...)** ((MOVOL:380V , MOVOL:460V , MOVOL:575V) + FREQ:60HZ , (MOVOL:400V , MOVOL:500V) + FREQ:50HZ) + (MODEL:GA110VP_16 , MODEL:GA90VP_16) , (FREQ:60HZ + MOVOL:230V , MOVOL:200V) + MODEL:GA90VP_16
1060	0070 6002 06	AR	TUBE 8.5X12	**(02/03/2017 - 12/07/2017)** ((MOVOL:380V , MOVOL:575V) + FREQ:60HZ , FREQ:50HZ + MOVOL:400V) + MODEL:GA110VP_16 **(13/07/2017 - 30/12/2027)** **(31/12/2027 - ...)** ((MOVOL:380V , MOVOL:460V , MOVOL:575V) + FREQ:60HZ , (MOVOL:400V , MOVOL:500V) + FREQ:50HZ) + (MODEL:GA110VP_16 , MODEL:GA90VP_16) , (FREQ:60HZ + MOVOL:230V , MOVOL:200V) + MODEL:GA90VP_16
1070	0070 6002 05	AR	TUBE 5.5X8	**(02/03/2017 - 12/07/2017)** ((MOVOL:380V , MOVOL:575V) + FREQ:60HZ , FREQ:50HZ + MOVOL:400V) + MODEL:GA110VP_16 **(13/07/2017 - 30/12/2027)** **(31/12/2027 - ...)** ((MOVOL:380V , MOVOL:460V , MOVOL:575V) + FREQ:60HZ , (MOVOL:400V , MOVOL:500V) + FREQ:50HZ) + (MODEL:GA110VP_16 , MODEL:GA90VP_16) , (FREQ:60HZ + MOVOL:230V , MOVOL:200V) + MODEL:GA90VP_16
1080	0070 6002 04	AR	TUBE 4X6	**(02/03/2017 - 12/07/2017)** ((MOVOL:380V , MOVOL:575V) + FREQ:60HZ , FREQ:50HZ + MOVOL:400V) + MODEL:GA110VP_16 **(13/07/2017 - 30/12/2027)** **(31/12/2027 - ...)** ((MOVOL:380V , MOVOL:460V , MOVOL:575V) + FREQ:60HZ , (MOVOL:400V , MOVOL:500V) + FREQ:50HZ) + (MODEL:GA110VP_16 , MODEL:GA90VP_16) , (FREQ:60HZ + MOVOL:230V , MOVOL:200V) + MODEL:GA90VP_16
1090	0070 6002 05	AR	TUBE 5.5X8	**(02/03/2017 - 12/07/2017)** ((MOVOL:380V , MOVOL:575V) + FREQ:60HZ , FREQ:50HZ + MOVOL:400V) + MODEL:GA110VP_16 **(13/07/2017 - 30/12/2027)** **(31/12/2027 - ...)** ((MOVOL:380V , MOVOL:460V , MOVOL:575V) + FREQ:60HZ , (MOVOL:400V , MOVOL:500V) + FREQ:50HZ) + (MODEL:GA110VP_16 , MODEL:GA90VP_16) , (FREQ:60HZ + MOVOL:230V , MOVOL:200V) + MODEL:GA90VP_16

Legend:

COOL:AIR - Cooling:Air cooled
IDRY:Y - Integrated dryer:Yes
MOVOL:200V - Supply voltage:200 V
MOVOL:400V - Supply voltage:400 V
MOVOL:575V - Supply voltage:575 V
FREQ:50HZ - Frequency:50 Hz
MODEL:GA110VP_16 - Model:GA 110VSD+
MOVOL:230V - Supply voltage:230 V
MOVOL:460V - Supply voltage:460 V
FREQ:60HZ - Frequency:60 Hz
MODEL:GA90VP_16 - Model:GA 90VSD+
MOVOL:380V - Supply voltage:380 V
MOVOL:500V - Supply voltage:500 V

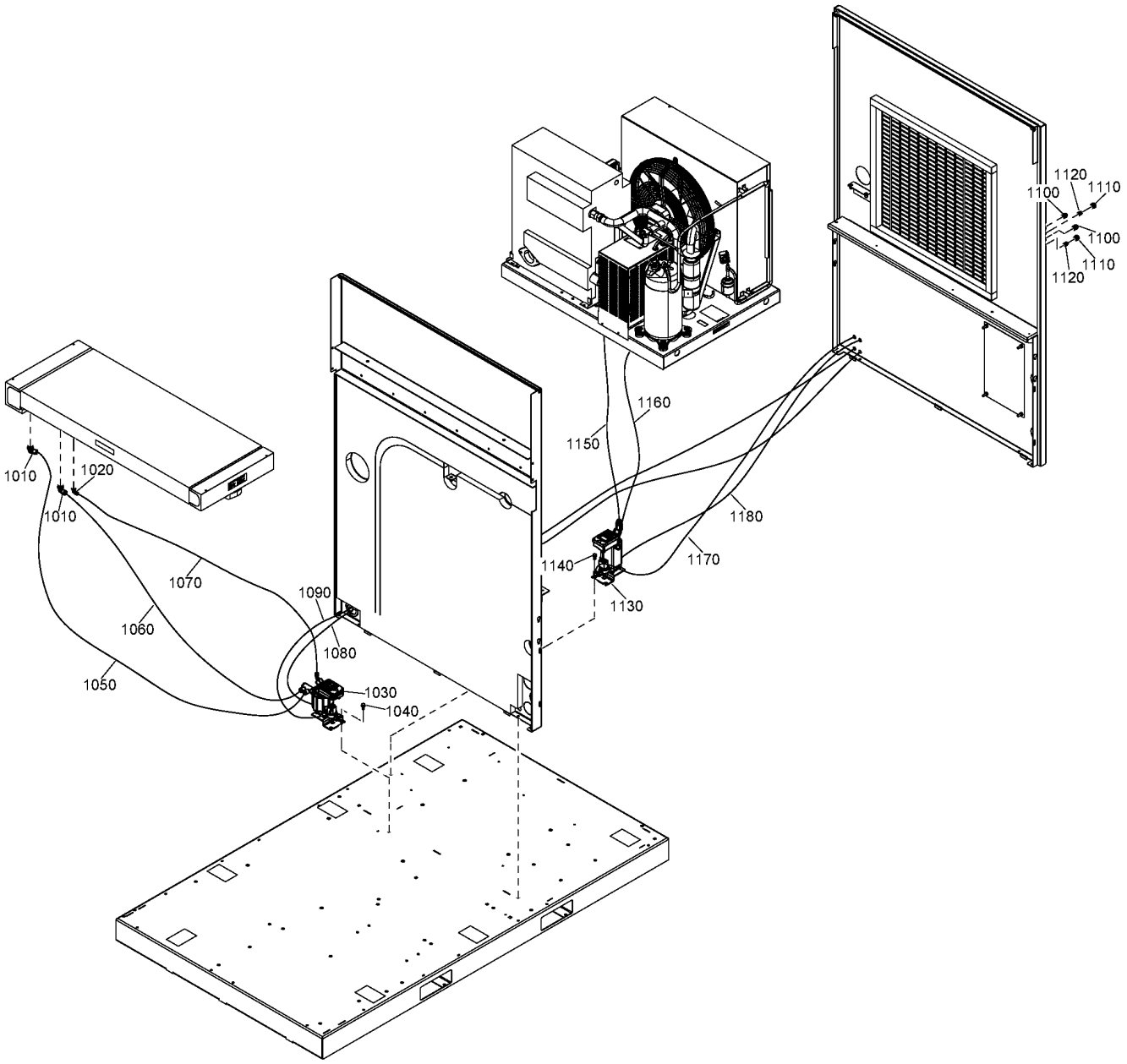
1120
1110
1100
1100
1110
1120
1160
1150
1010
1020
1010
1180
1140
1170
1070
1090
1130
1060
1080
1050
1030
1040

Ref	Part Number	Qty	Name	Validity
1100	0583 8100 70	2	PIPE FITTING	**(02/03/2017 - 12/07/2017)** ((MOVOL:380V , MOVOL:575V) + FREQ:60HZ , FREQ:50HZ + MOVOL:400V) + MODEL:GA110VP_16 **(13/07/2017 - 30/12/2027)** **(31/12/2027 - ...)** ((MOVOL:380V , MOVOL:460V , MOVOL:575V) + FREQ:60HZ , (MOVOL:400V , MOVOL:500V) + FREQ:50HZ) + (MODEL:GA110VP_16 , MODEL:GA90VP_16) , (FREQ:60HZ + MOVOL:230V , MOVOL:200V) + MODEL:GA90VP_16
1110	0581 0000 43	2	BULKHEAD	**(02/03/2017 - 12/07/2017)** ((MOVOL:380V , MOVOL:575V) + FREQ:60HZ , FREQ:50HZ + MOVOL:400V) + MODEL:GA110VP_16 **(13/07/2017 - 30/12/2027)**
1120	0583 8100 66	2	FITTING	**(02/03/2017 - 12/07/2017)** ((MOVOL:380V , MOVOL:575V) + FREQ:60HZ , FREQ:50HZ + MOVOL:400V) + MODEL:GA110VP_16 **(13/07/2017 - 30/12/2027)** **(31/12/2027 - ...)** ((MOVOL:380V , MOVOL:460V , MOVOL:575V) + FREQ:60HZ , (MOVOL:400V , MOVOL:500V) + FREQ:50HZ) + (MODEL:GA110VP_16 , MODEL:GA90VP_16) , (FREQ:60HZ + MOVOL:230V , MOVOL:200V) + MODEL:GA90VP_16
1130	1649 8003 42	1	LD202 DRAIN	**(02/03/2017 - 12/07/2017)** ((MOVOL:380V , MOVOL:575V) + FREQ:60HZ , FREQ:50HZ + MOVOL:400V) + MODEL:GA110VP_16 **(13/07/2017 - 30/12/2027)** **(31/12/2027 - ...)** ((MOVOL:380V , MOVOL:460V , MOVOL:575V) + FREQ:60HZ , (MOVOL:400V , MOVOL:500V) + FREQ:50HZ) + (MODEL:GA110VP_16 , MODEL:GA90VP_16) , (FREQ:60HZ + MOVOL:230V , MOVOL:200V) + MODEL:GA90VP_16
	• 2902 0161 02	1	LD DRAIN 4000H MAINTENANCE KIT	
	• ~~2902 0161 03~~	1	LD DRAIN 8000H MAINTENANCE KIT	
	Substituted by:	2200 9020 17 - KIT WEAR DRAIN (quantity: 1)		
1140	0147 1963 08	1	SCREW	**(02/03/2017 - 12/07/2017)** ((MOVOL:380V , MOVOL:575V) + FREQ:60HZ , FREQ:50HZ + MOVOL:400V) + MODEL:GA110VP_16 **(13/07/2017 - 30/12/2027)** **(31/12/2027 - ...)** ((MOVOL:380V , MOVOL:460V , MOVOL:575V) + FREQ:60HZ , (MOVOL:400V , MOVOL:500V) + FREQ:50HZ) + (MODEL:GA110VP_16 , MODEL:GA90VP_16) , (FREQ:60HZ + MOVOL:230V , MOVOL:200V) + MODEL:GA90VP_16
1150	0070 6002 06	AR	TUBE 8.5X12	**(02/03/2017 - 12/07/2017)** ((MOVOL:380V , MOVOL:575V) + FREQ:60HZ , FREQ:50HZ + MOVOL:400V) + MODEL:GA110VP_16 **(13/07/2017 - 30/12/2027)** **(31/12/2027 - ...)** ((MOVOL:380V , MOVOL:460V , MOVOL:575V) + FREQ:60HZ , (MOVOL:400V , MOVOL:500V) + FREQ:50HZ) + (MODEL:GA110VP_16 , MODEL:GA90VP_16) , (FREQ:60HZ + MOVOL:230V , MOVOL:200V) + MODEL:GA90VP_16
1160	0070 6002 05	AR	TUBE 5.5X8	**(02/03/2017 - 12/07/2017)** ((MOVOL:380V , MOVOL:575V) + FREQ:60HZ , FREQ:50HZ + MOVOL:400V) + MODEL:GA110VP_16 **(13/07/2017 - 30/12/2027)** **(31/12/2027 - ...)** ((MOVOL:380V , MOVOL:460V , MOVOL:575V) + FREQ:60HZ , (MOVOL:400V , MOVOL:500V) + FREQ:50HZ) + (MODEL:GA110VP_16 , MODEL:GA90VP_16) , (FREQ:60HZ + MOVOL:230V , MOVOL:200V) + MODEL:GA90VP_16
1170	0070 6002 05	AR	TUBE 5.5X8	**(02/03/2017 - 12/07/2017)** ((MOVOL:380V , MOVOL:575V) + FREQ:60HZ , FREQ:50HZ + MOVOL:400V) + MODEL:GA110VP_16 **(13/07/2017 - 30/12/2027)** **(31/12/2027 - ...)** ((MOVOL:380V , MOVOL:460V , MOVOL:575V) + FREQ:60HZ , (MOVOL:400V , MOVOL:500V) + FREQ:50HZ) + (MODEL:GA110VP_16 , MODEL:GA90VP_16) , (FREQ:60HZ + MOVOL:230V , MOVOL:200V) + MODEL:GA90VP_16
1180	0070 6002 04	AR	TUBE 4X6	**(02/03/2017 - 12/07/2017)** ((MOVOL:380V , MOVOL:575V) + FREQ:60HZ , FREQ:50HZ + MOVOL:400V) + MODEL:GA110VP_16 **(13/07/2017 - 30/12/2027)** **(31/12/2027 - ...)** ((MOVOL:380V , MOVOL:460V , MOVOL:575V) + FREQ:60HZ , (MOVOL:400V , MOVOL:500V) + FREQ:50HZ) + (MODEL:GA110VP_16 , MODEL:GA90VP_16) , (FREQ:60HZ + MOVOL:230V , MOVOL:200V) + MODEL:GA90VP_16

Legend:

COOL:AIR - Cooling:Air cooled
IDRY:Y - Integrated dryer:Yes
MOVOL:200V - Supply voltage:200 V
MOVOL:400V - Supply voltage:400 V
MOVOL:575V - Supply voltage:575 V
FREQ:50HZ - Frequency:50 Hz
MODEL:GA110VP_16 - Model:GA 110VSD+
MOVOL:230V - Supply voltage:230 V
MOVOL:460V - Supply voltage:460 V
FREQ:60HZ - Frequency:60 Hz
MODEL:GA90VP_16 - Model:GA 90VSD+
MOVOL:380V - Supply voltage:380 V
MOVOL:500V - Supply voltage:500 V

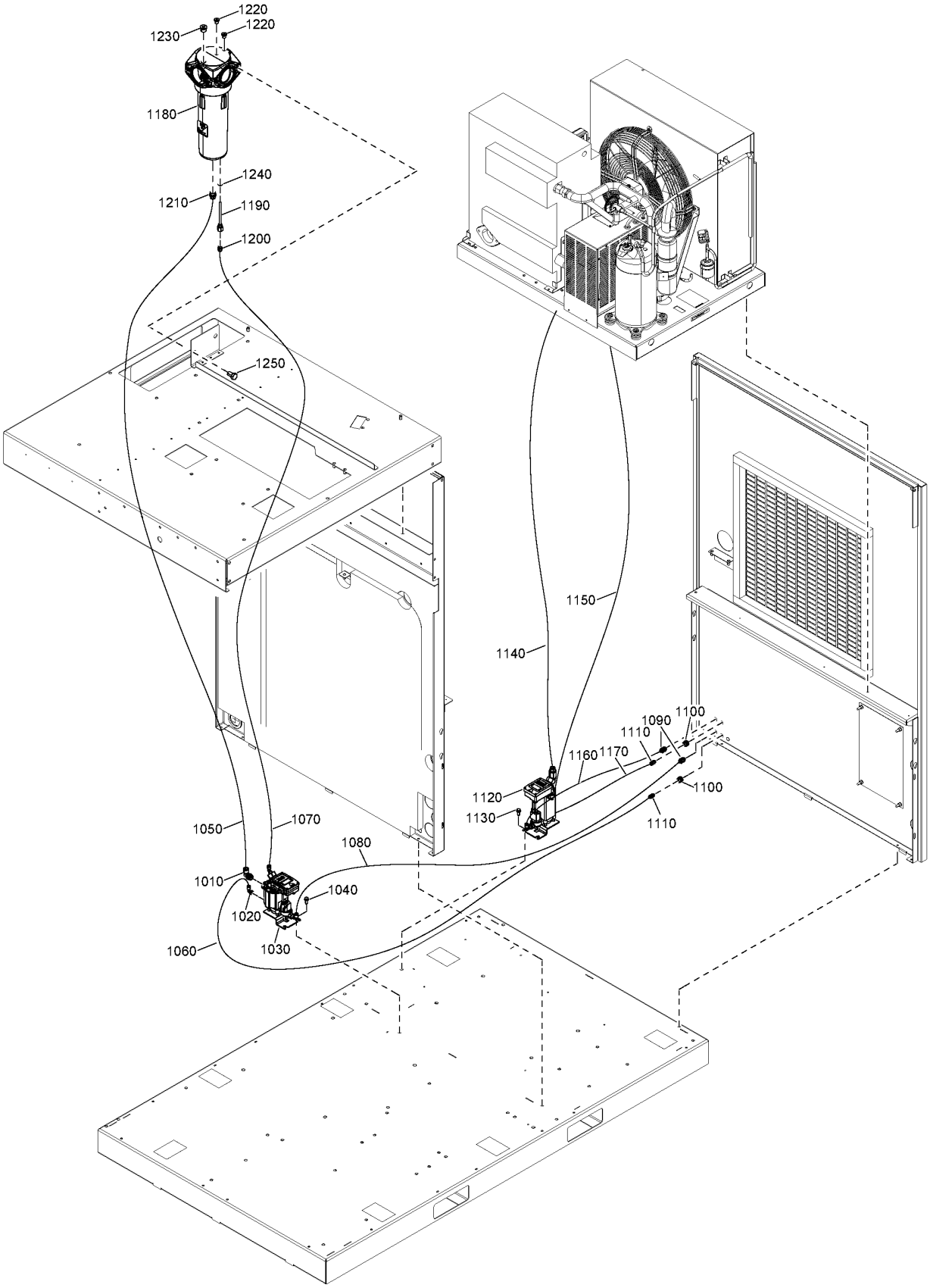
1220
1220
1230
1180
1240
1210
1190
1200
1250
1150
1140
1100
1090
1110
1160
1170
1100
1120
1130
1110
1050
1070
1080
1010
1040
1020
1030
1060

Ref	Part Number	Qty	Name	Validity	R.
1010	0583 8120 81	1	ELBOW	(21/08/2018 - ...)	
1020	0583 8120 74	1	ELBOW	(21/08/2018 - ...)	
1030	1649 8002 15	1	LD203 DRAIN	(21/08/2018 - ...)	
	• 2902 0161 02	1	LD DRAIN 4000H MAINTENANCE KIT		
	• ~~2902 0161 03~~	1	LD DRAIN 8000H MAINTENANCE KIT		
	Substituted by:	2200 9020 17 - KIT WEAR DRAIN (quantity: 1)			
1040	0147 1963 08	1	HEXAGON BOLT	(21/08/2018 - ...)	
1050	0070 6002 06	AR	TUBE 8.5X12	(21/08/2018 - ...)	
1060	0070 6002 05	AR	TUBE 5.5X8	(21/08/2018 - ...)	
1070	0070 6002 04	AR	TUBE 4X6	(21/08/2018 - ...)	
1080	0070 6002 05	AR	TUBE 5.5X8	(21/08/2018 - ...)	
1090	0583 8100 70	2	PIPE FITTING	(21/08/2018 - ...)	
1100	0581 0000 43	2	BULKHEAD	(21/08/2018 - 30/12/2027)	
1110	0583 8100 66	2	FITTING	(21/08/2018 - ...)	
1120	1649 8003 42	1	LD202 DRAIN	(21/08/2018 - ...)	
	• 2902 0161 02	1	LD DRAIN 4000H MAINTENANCE KIT		
	• ~~2902 0161 03~~	1	LD DRAIN 8000H MAINTENANCE KIT		
	Substituted by:	2200 9020 17 - KIT WEAR DRAIN (quantity: 1)			
1130	0147 1963 08	1	HEXAGON BOLT	(21/08/2018 - ...)	
1140	0070 6002 06	AR	TUBE 8.5X12	(21/08/2018 - ...)	
1150	0070 6002 05	AR	TUBE 5.5X8	(21/08/2018 - ...)	
1160	0070 6002 05	AR	TUBE 5.5X8	(21/08/2018 - ...)	
1170	0070 6002 04	AR	TUBE 4X6	(21/08/2018 - ...)	
1180	1613 9370 83	1	WSD 250	(21/08/2018 - ...)	
	• 0663 6147 00	1	O-RING		Ø114.5x3
	• 0663 6136 00	1	O-RING		Ø59.5x3
	• 0663 2111 27	1	O-RING		Ø31.5x3
1190	1625 8228 02	1	PIPE	(01/02/2020 - ...)	
1190	~~1625 8282 00~~	1	PIPE	(21/08/2018 - 31/01/2020)	
	Substituted by:	1625 8228 02 - PIPE G 1/4 AX120 (quantity: 1)			
1200	0583 8100 69	1	PIPE FITTING	(21/08/2018 - ...)	
1210	0583 8100 71	1	PIPE FITTING	(21/08/2018 - ...)	
1220	0686 3718 15	2	PLUG	(21/08/2018 - ...)	
1230	0686 3718 17	1	PLUG	(21/08/2018 - ...)	
1240	0663 3119 00	1	O-RING	(21/08/2018 - ...)	
1250	0147 1474 03	2	HEXAGON BOLT	(21/08/2018 - ...)	

Legend:

COOL:WATER - Cooling:Water cooled
IDRY:Y - Integrated dryer:Yes
MOVOL:380V - Supply voltage:380 V
FREQ:50HZ - Frequency:50 Hz
MODEL:GA110VP_16 - Model:GA 110VSD+
MOVOL:400V - Supply voltage:400 V
FREQ:60HZ - Frequency:60 Hz
MODEL:GA90VP_16 - Model:GA 90VSD+
MOVOL:460V - Supply voltage:460 V

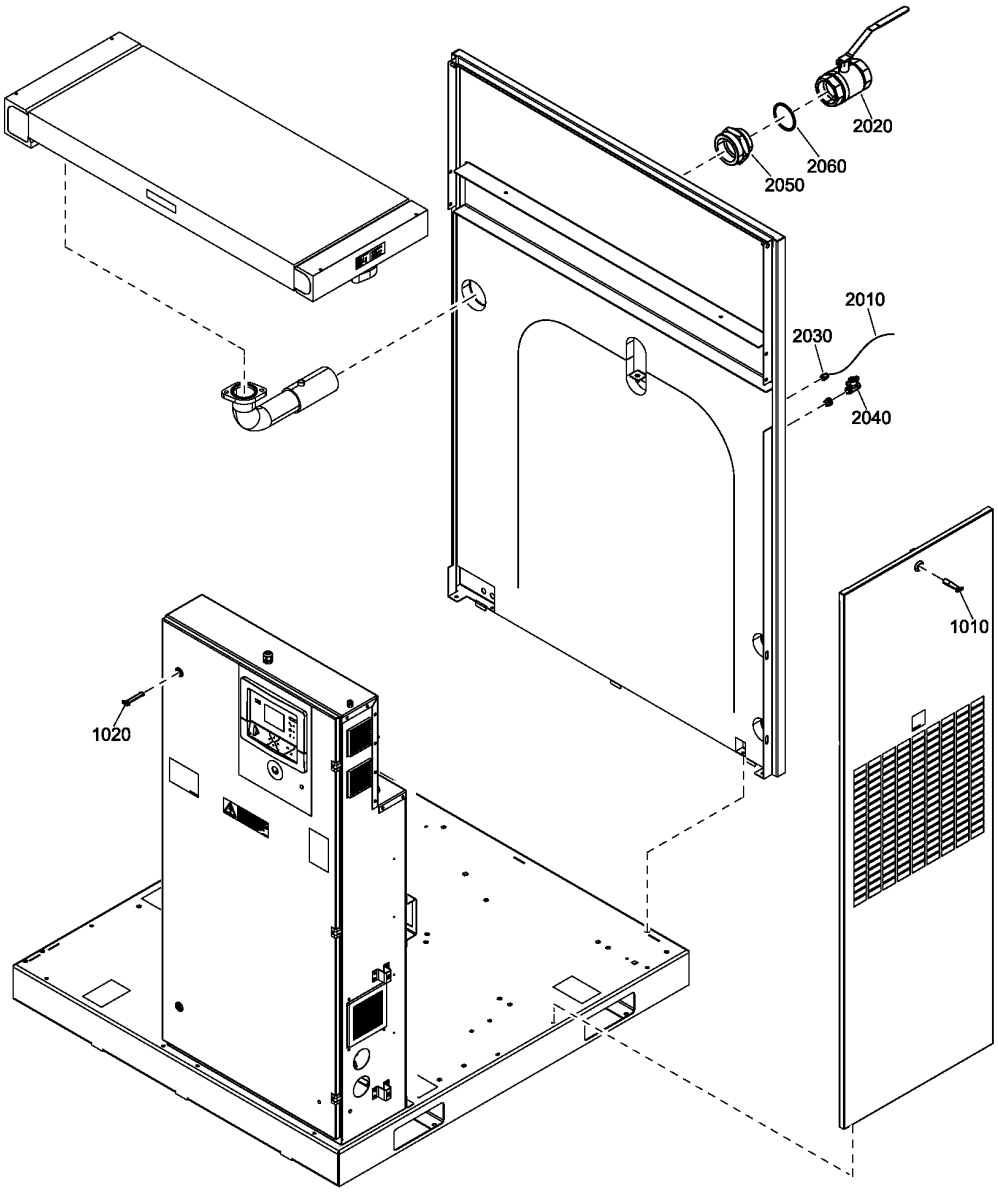
2020
2060
2050
2010
2030
2040
1010
1020

Ref	Part Number	Qty	Name	Validity
1010	1089 9068 01	1	KEY	**(02/03/2017 - 20/08/2018)** COOL:AIR **(21/08/2018 - ...)**
1020	1089 9154 02	1	KEY	**(02/03/2017 - 20/08/2018)** COOL:AIR **(21/08/2018 - ...)**
2010	0070 6002 03	AR	PLASTIC TUBE 6X8	**(11/01/2018 - 20/08/2018)** COOL:AIR **(21/08/2018 - ...)**
2020	0852 0011 05	1	BALL VALVE	**(28/08/2017 - 20/08/2018)** COOL:AIR **(21/08/2018 - ...)**
2030	0583 8100 76	1	COUPLING	**(28/08/2017 - 20/08/2018)** COOL:AIR **(21/08/2018 - ...)**
2040	0852 0010 55	1	BALL VALVE	**(28/08/2017 - 20/08/2018)** COOL:AIR **(21/08/2018 - ...)**
2050	1625 2022 00	1	ADAPTER	**(28/08/2017 - 20/08/2018)** CAPPRE:ULCUL + COOL:AIR **(21/08/2018 - ...)** CAPPRE:ULCUL
2060	0653 1331 00	1	FLAT GASKET	**(28/08/2017 - 20/08/2018)** CAPPRE:ULCUL + COOL:AIR **(21/08/2018 - ...)** CAPPRE:ULCUL

Legend:

CAPPRE:ULCUL - Component approval electrical:UL/cUL
COOL:AIR - Cooling:Air cooled
IDRY:N - Integrated dryer:No

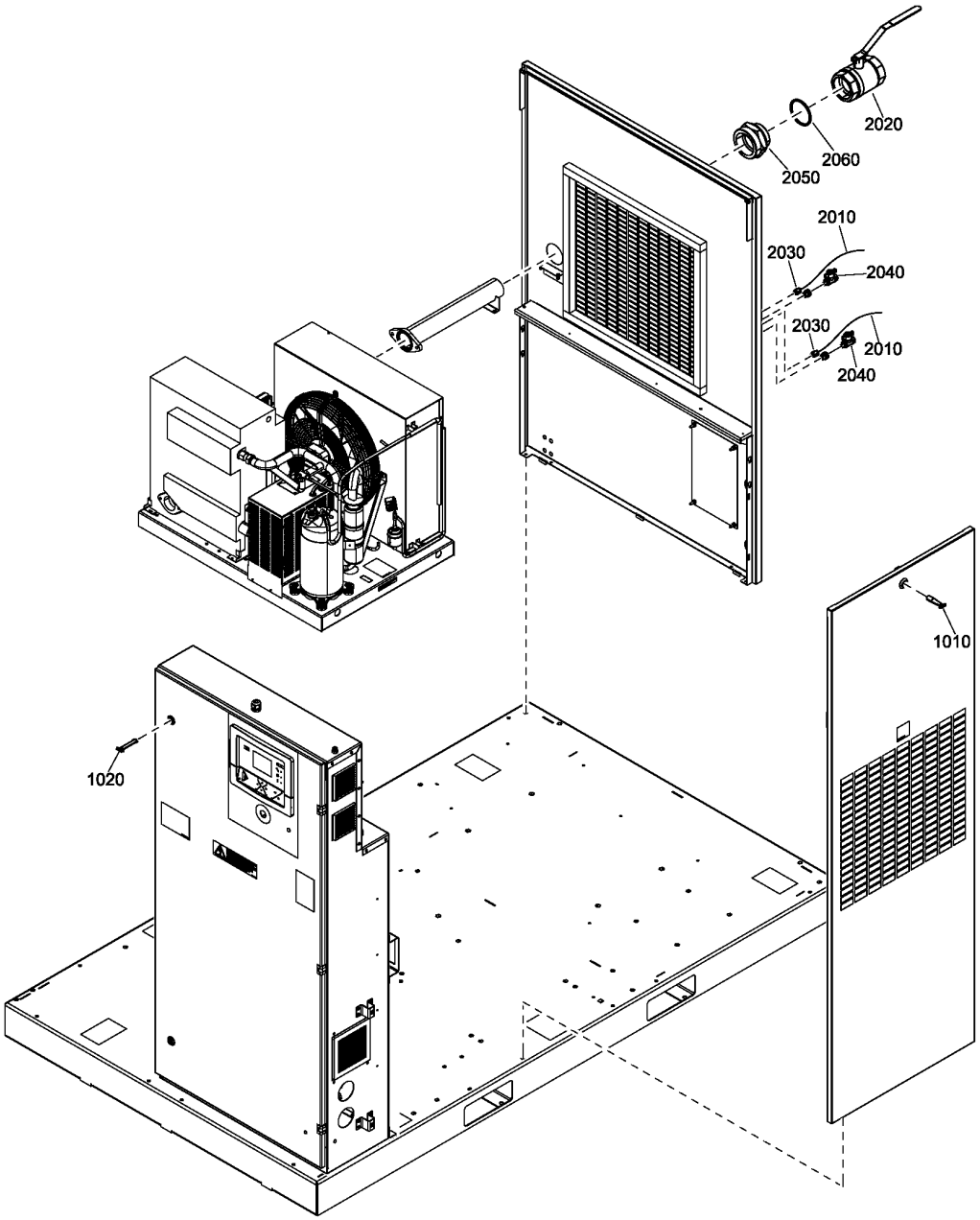
2020
2060
2050
2010
2030
2040
2030
2010
2040
1010
1020

Ref	Part Number	Qty	Name	Validity
1010	1089 9068 01	1	KEY	**(02/03/2017 - 20/08/2018)** COOL:AIR **(21/08/2018 - ...)**
1020	1089 9154 02	1	KEY	**(02/03/2017 - 20/08/2018)** COOL:AIR **(21/08/2018 - ...)**
2010	0070 6002 03	AR	PLASTIC TUBE 6X8	**(11/01/2018 - 20/08/2018)** COOL:AIR **(21/08/2018 - ...)**
2020	0852 0011 05	1	BALL VALVE	**(28/08/2017 - 20/08/2018)** COOL:AIR **(21/08/2018 - ...)**
2030	0583 8100 76	2	COUPLING	**(28/08/2017 - 20/08/2018)** COOL:AIR **(21/08/2018 - ...)**
2040	0852 0010 55	2	BALL VALVE	**(28/08/2017 - 20/08/2018)** COOL:AIR **(21/08/2018 - ...)**
2050	1625 2022 00	1	ADAPTER	**(28/08/2017 - 20/08/2018)** CAPPRE:ULCUL + COOL:AIR **(21/08/2018 - ...)** CAPPRE:ULCUL
2060	0653 1331 00	1	FLAT GASKET	**(28/08/2017 - 20/08/2018)** CAPPRE:ULCUL + COOL:AIR **(21/08/2018 - ...)** CAPPRE:ULCUL

Legend:

CAPPRE:ULCUL - Component approval electrical:UL/cUL
COOL:AIR - Cooling:Air cooled
IDRY:Y - Integrated dryer:Yes

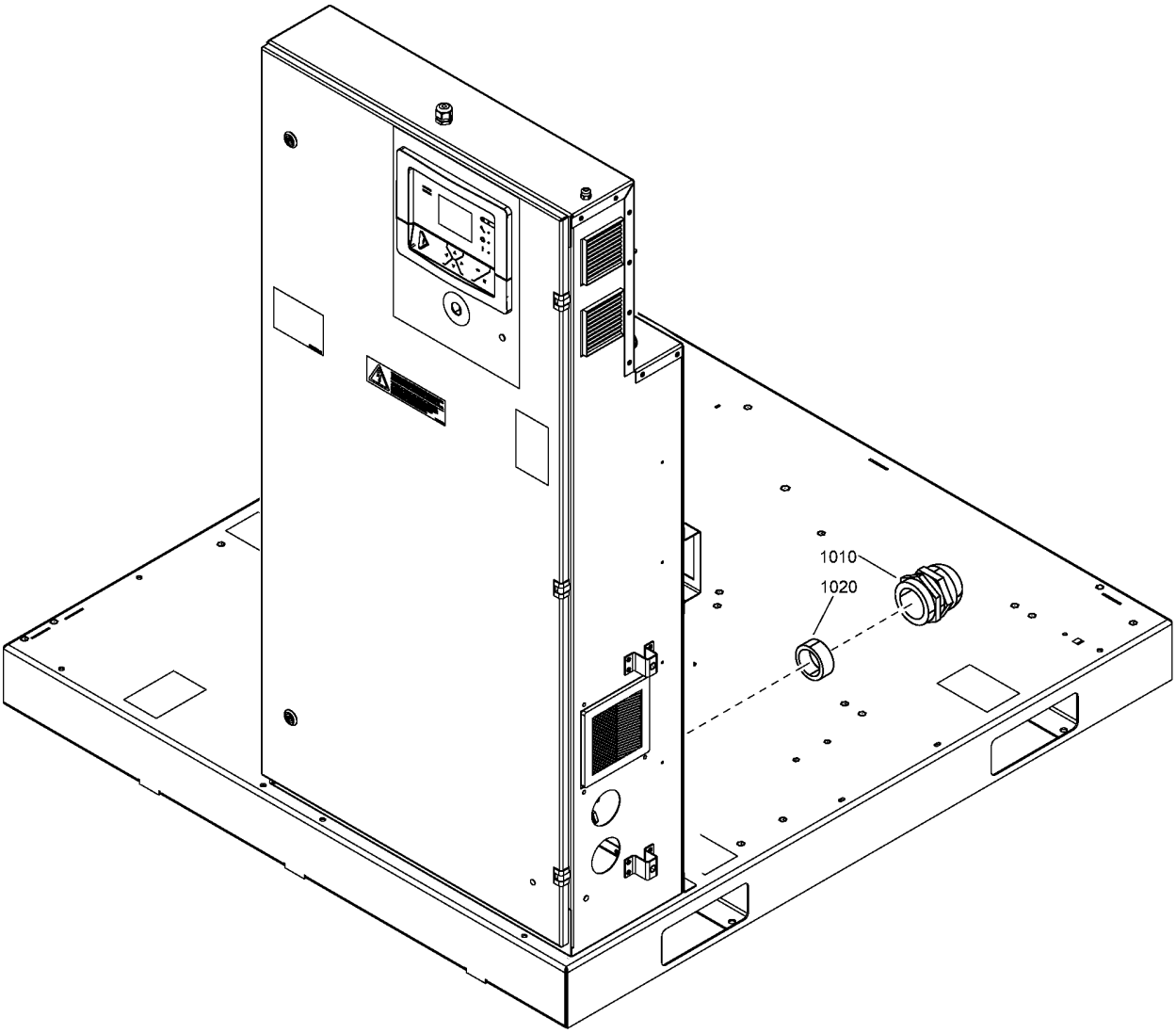
1010
1020

Ref	Part Number	Qty	Name	Validity
1010	0698 5140 77	1	CABLE GLAND	**(11/04/2018 - ...)**
1020	0698 5148 56	1	SEAL	**(11/04/2018 - ...)**

Legend:

FREQ:50HZ - Frequency:50 Hz
FREQ:60HZ - Frequency:60 Hz
MOVOL:380V - Supply voltage:380 V
MOVOL:400V - Supply voltage:400 V
MOVOL:460V - Supply voltage:460 V

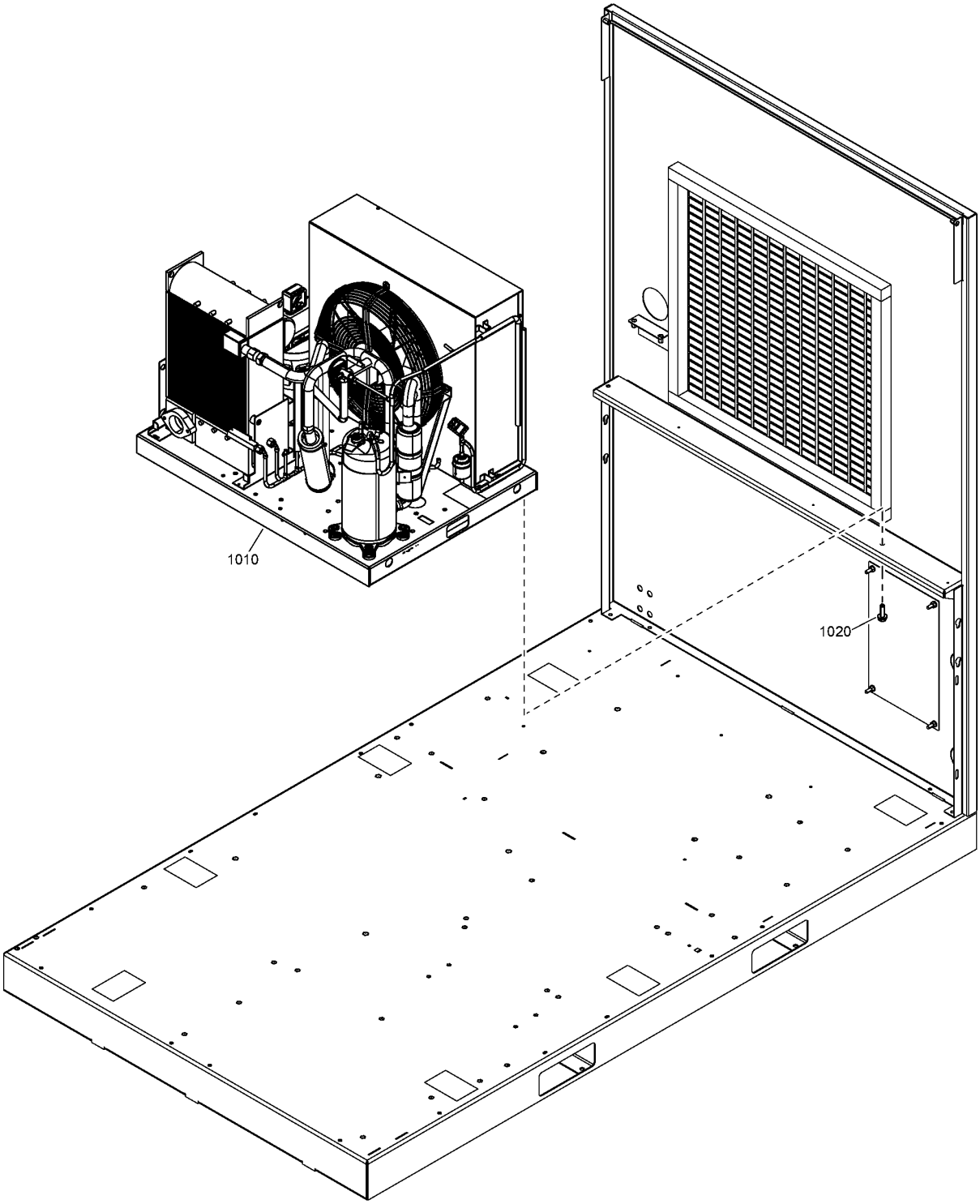
1010
1020

20.1 - Assembly GA 75L VSD+ - ID 255

(((MOVOL:200V , MOVOL:380V , MOVOL:460V) + CAPPRE:IEC , (MOVOL:230V , MOVOL:460V , MOVOL:575V) + CAPPRE:ULCUL) + FREQ:60HZ , (MOVOL:200V , MOVOL:400V , MOVOL:500V) + CAPPRE:IEC + FREQ:50HZ) + IDRY:Y + MODEL:GA75VP_16

Ref	Part Number	Qty	Name	Validity
1010	8092 2662 98	1	AIR DRYER	**(13/07/2017 - ...)** (MOVOL:200V , MOVOL:400V , MOVOL:500V) + CAPPRE:IEC + FREQ:50HZ
1010	8092 2663 14	1	AIR DRYER	**(20/07/2017 - ...)** (MOVOL:200V , MOVOL:380V) + CAPPRE:IEC + FREQ:60HZ
1010	8092 2663 06	1	AIR DRYER	**(20/07/2017 - ...)** ((MOVOL:230V , MOVOL:460V) + CAPPRE:ULCUL , CAPPRE:IEC + MOVOL:460V) + FREQ:60HZ
1020	1079 1472 06	4	BOLT	**(20/07/2017 - ...)**

Legend:

CAPPRE:IEC - Component approval electrical:IEC
CAPPRE:ULCUL - Component approval electrical:UL/cUL
FREQ:50HZ - Frequency:50 Hz
FREQ:60HZ - Frequency:60 Hz
IDRY:Y - Integrated dryer:Yes
MODEL:GA75VP_16 - Model:GA 75VSD+
MOVOL:200V - Supply voltage:200 V
MOVOL:230V - Supply voltage:230 V
MOVOL:380V - Supply voltage:380 V
MOVOL:400V - Supply voltage:400 V
MOVOL:460V - Supply voltage:460 V
MOVOL:500V - Supply voltage:500 V
MOVOL:575V - Supply voltage:575 V

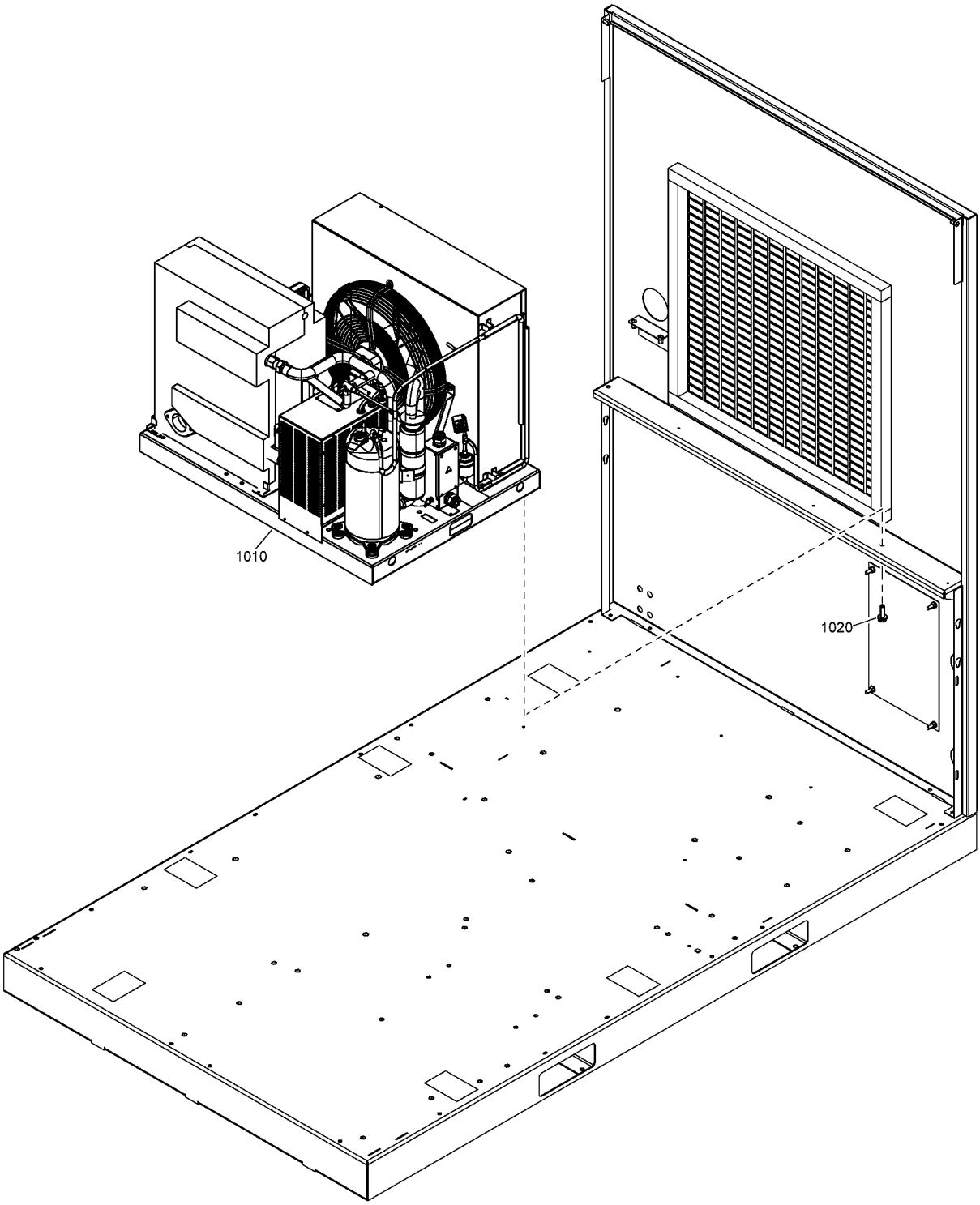
1010
1020

20.2 - Assembly GA 90 VSD+ - ID 286

(((MOVOL:200V , MOVOL:380V , MOVOL:460V) + CAPPRE:IEC , (MOVOL:230V , MOVOL:460V , MOVOL:575V) + CAPPRE:ULCUL) + FREQ:60HZ , (MOVOL:200V , MOVOL:400V , MOVOL:500V) + CAPPRE:IEC + FREQ:50HZ) + IDRY:Y + MODEL:GA90VP_16

Ref	Part Number	Qty	Name	Validity
1010	8092 2663 22	1	AIR DRYER	**(20/07/2017 - ...)** (MOVOL:200V , MOVOL:400V , MOVOL:500V) + CAPPRE:IEC + FREQ:50HZ
1010	1627 1653 80	1	AIR DRYER	**(20/07/2017 - ...)** CAPPRE:ULCUL + FREQ:60HZ + MOVOL:575V
1010	8092 2663 89	1	AIR DRYER	**(20/07/2017 - ...)** (MOVOL:200V , MOVOL:380V) + CAPPRE:IEC + FREQ:60HZ
1010	8092 2663 30	1	AIR DRYER	**(20/07/2017 - ...)** ((MOVOL:230V , MOVOL:460V) + CAPPRE:ULCUL , CAPPRE:IEC + MOVOL:460V) + FREQ:60HZ
1020	1079 1472 06	4	HEXAGON BOLT	**(20/07/2017 - ...)**

Legend:

CAPPRE:IEC - Component approval electrical:IEC
CAPPRE:ULCUL - Component approval electrical:UL/cUL
FREQ:50HZ - Frequency:50 Hz
FREQ:60HZ - Frequency:60 Hz
IDRY:Y - Integrated dryer:Yes
MODEL:GA90VP_16 - Model:GA 90VSD+
MOVOL:200V - Supply voltage:200 V
MOVOL:230V - Supply voltage:230 V
MOVOL:380V - Supply voltage:380 V
MOVOL:400V - Supply voltage:400 V
MOVOL:460V - Supply voltage:460 V
MOVOL:500V - Supply voltage:500 V
MOVOL:575V - Supply voltage:575 V

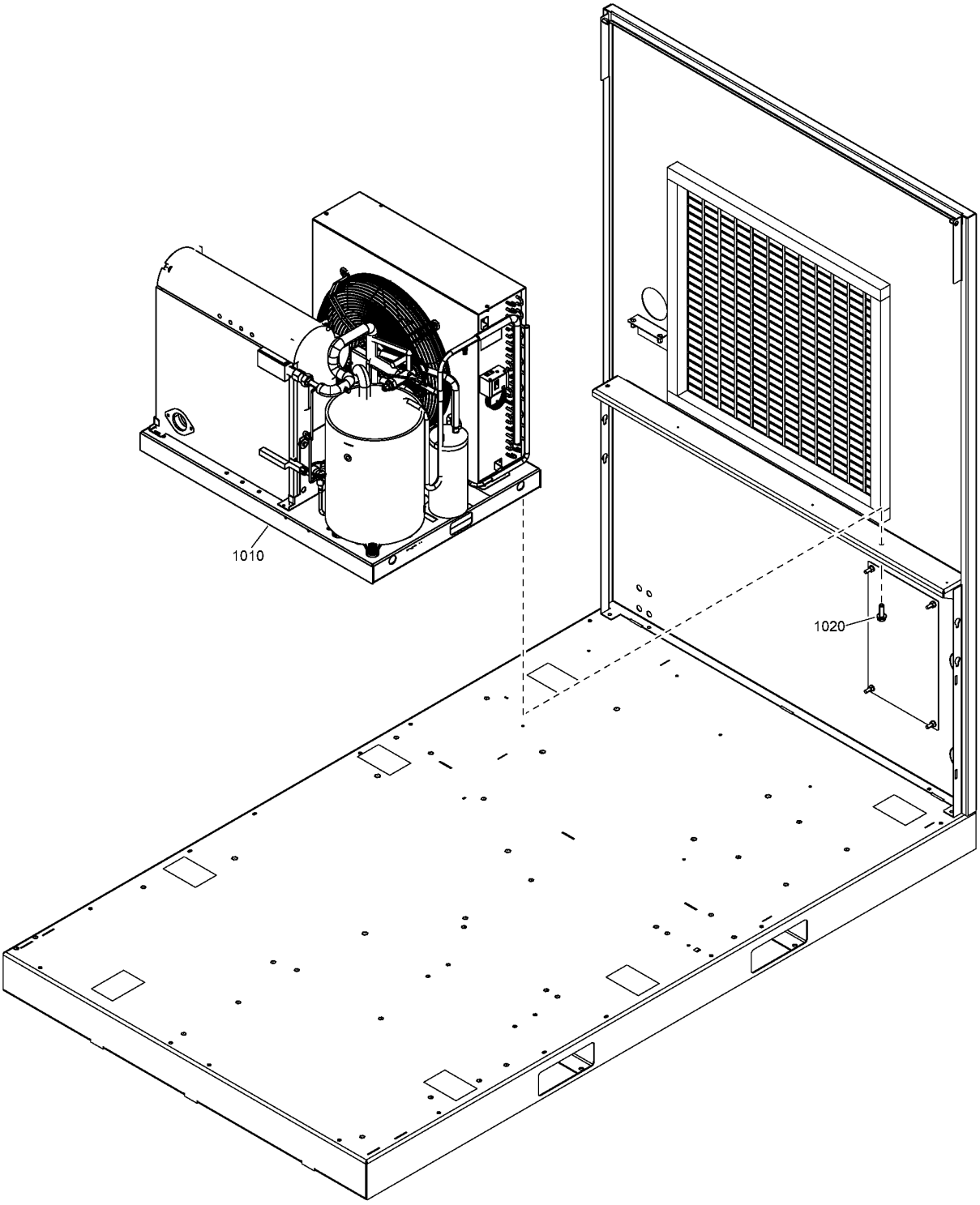
1010
1020

20.3 - Assembly GA 110 VSD+ - ID 340

(((MOVOL:200V , MOVOL:380V , MOVOL:460V) + CAPPRE:IEC , (MOVOL:230V , MOVOL:460V , MOVOL:575V) + CAPPRE:ULCUL) + FREQ:60HZ , (MOVOL:200V , MOVOL:400V , MOVOL:500V) + CAPPRE:IEC + FREQ:50HZ) + IDRY:Y + MODEL:GA110VP_16

Ref	Part Number	Qty	Name	Validity
1010	2200 9029 63	1	AIR DRYER	**(09/03/2017 - ...)** CAPPRE:ULCUL + FREQ:60HZ + MOVOL:575V
1010	2200 9029 65	1	AIR DRYER	**(13/07/2017 - ...)** (MOVOL:200V , MOVOL:400V , MOVOL:500V) + CAPPRE:IEC + FREQ:50HZ
1010	2200 9029 61	1	AIR DRYER	**(20/07/2017 - ...)** ((MOVOL:230V , MOVOL:460V) + CAPPRE:ULCUL , CAPPRE:IEC + MOVOL:460V) + FREQ:60HZ
1010	2200 9029 62	1	AIR DRYER	**(13/07/2017 - ...)** (MOVOL:200V , MOVOL:380V) + CAPPRE:IEC + FREQ:60HZ
1020	1079 1472 06	4	HEXAGON BOLT	**(20/07/2017 - ...)**

Legend:

CAPPRE:IEC - Component approval electrical:IEC
CAPPRE:ULCUL - Component approval electrical:UL/cUL
FREQ:50HZ - Frequency:50 Hz
FREQ:60HZ - Frequency:60 Hz
IDRY:Y - Integrated dryer:Yes
MODEL:GA110VP_16 - Model:GA 110VSD+
MOVOL:200V - Supply voltage:200 V
MOVOL:230V - Supply voltage:230 V
MOVOL:380V - Supply voltage:380 V
MOVOL:400V - Supply voltage:400 V
MOVOL:460V - Supply voltage:460 V
MOVOL:500V - Supply voltage:500 V
MOVOL:575V - Supply voltage:575 V

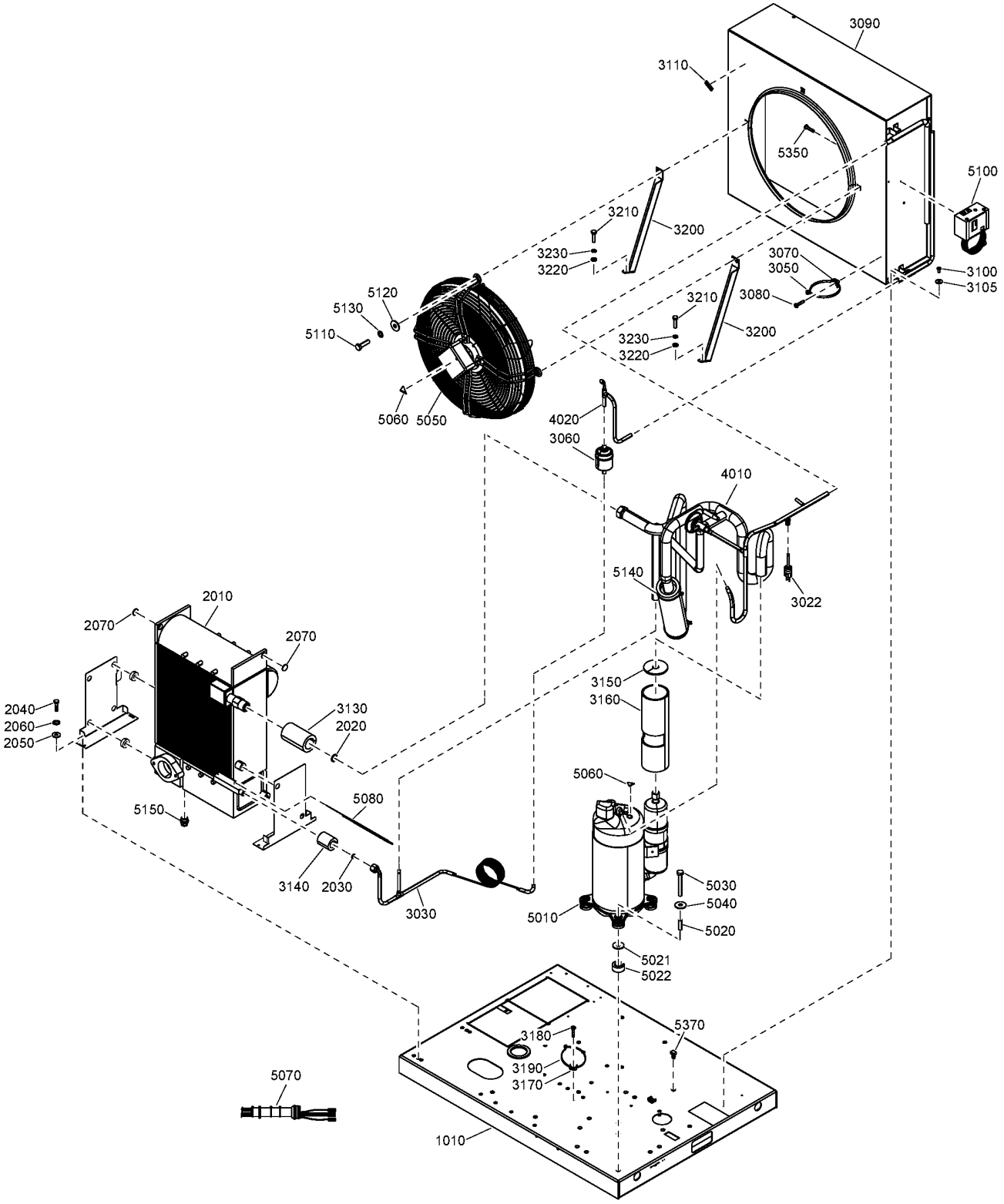
3090
3110
5350
5100
3210
3200
3230
3220
3070
3050
3100
3105
3080
5120
5130
5110
5060
5050
4020
3060
4010
5140
3022
2010
2070
2070
2040
2060
2050
3130
2020
3150
3160
5060
5080
5150
3140
2030
3030
5010
5030
5040
5020
5021
5022
5370
3180
3190
3170
5070
1010

Ref	Part Number	Qty	Name	Validity	R.
	8092 2662 98	1	AIR DRYER	**(13/07/2017 - ...)** (MOVOL:200V , MOVOL:400V , MOVOL:500V) + CAPPRE:IEC + FREQ:50HZ	R410A
	8092 2663 14	1	AIR DRYER	**(13/07/2017 - ...)** (MOVOL:200V , MOVOL:380V) + CAPPRE:IEC + FREQ:60HZ	R410A
	8092 2663 06	1	AIR DRYER	**(13/07/2017 - ...)** (MOVOL:230V , MOVOL:460V) + CAPPRE:ULCUL + FREQ:60HZ	R410A
1010	1624 9506 80	1	FRAME	**(09/03/2017 - 12/07/2017)** CAPPRE:IEC + FREQ:50HZ + MOVOL:400V **(13/07/2017 - 19/07/2017)** (MOVOL:200V , MOVOL:400V , MOVOL:500V) + CAPPRE:IEC + FREQ:50HZ **(20/07/2017 - ...)**	
	• 1622 0000 20	1	DECAL SYMBOLS		
	• 1627 1828 00	1	DECAL WARNING		
2010	1603 6401 01	1	HEAT EXCHANGER	**(09/03/2017 - 12/07/2017)** CAPPRE:IEC + FREQ:50HZ + MOVOL:400V **(13/07/2017 - 19/07/2017)** (MOVOL:200V , MOVOL:400V , MOVOL:500V) + CAPPRE:IEC + FREQ:50HZ **(20/07/2017 - ...)**	
2020	~~1617 0315 00~~ **Substituted by:**	1 1617 0165 00 - RING (quantity: 1)	RING	**(09/03/2017 - 12/07/2017)** CAPPRE:IEC + FREQ:50HZ + MOVOL:400V **(13/07/2017 - 19/07/2017)** (MOVOL:200V , MOVOL:400V , MOVOL:500V) + CAPPRE:IEC + FREQ:50HZ **(20/07/2017 - ...)**	
2030	1617 0092 03	1	RING	**(09/03/2017 - 12/07/2017)** CAPPRE:IEC + FREQ:50HZ + MOVOL:400V **(13/07/2017 - 19/07/2017)** (MOVOL:200V , MOVOL:400V , MOVOL:500V) + CAPPRE:IEC + FREQ:50HZ **(20/07/2017 - ...)**	
2040	0147 1247 03	4	HEXAGON BOLT	**(09/03/2017 - 12/07/2017)** CAPPRE:IEC + FREQ:50HZ + MOVOL:400V **(13/07/2017 - 19/07/2017)** (MOVOL:200V , MOVOL:400V , MOVOL:500V) + CAPPRE:IEC + FREQ:50HZ **(20/07/2017 - ...)**	
2050	0300 0274 64	4	WASHER	**(09/03/2017 - 12/07/2017)** CAPPRE:IEC + FREQ:50HZ + MOVOL:400V **(13/07/2017 - 19/07/2017)** (MOVOL:200V , MOVOL:400V , MOVOL:500V) + CAPPRE:IEC + FREQ:50HZ **(20/07/2017 - ...)**	
2060	0333 3220 00	4	WASHER	**(09/03/2017 - 12/07/2017)** CAPPRE:IEC + FREQ:50HZ + MOVOL:400V **(13/07/2017 - 19/07/2017)** (MOVOL:200V , MOVOL:400V , MOVOL:500V) + CAPPRE:IEC + FREQ:50HZ **(20/07/2017 - ...)**	
2070	1624 2451 00	2	INSULATION	**(09/03/2017 - 12/07/2017)** CAPPRE:IEC + FREQ:50HZ + MOVOL:400V **(13/07/2017 - 19/07/2017)** (MOVOL:200V , MOVOL:400V , MOVOL:500V) + CAPPRE:IEC + FREQ:50HZ **(20/07/2017 - ...)**	
3022	1089 9139 16	1	HP SWITCH	**(09/03/2017 - 12/07/2017)** CAPPRE:IEC + FREQ:50HZ + MOVOL:400V **(13/07/2017 - 19/07/2017)** (MOVOL:200V , MOVOL:400V , MOVOL:500V) + CAPPRE:IEC + FREQ:50HZ **(20/07/2017 - ...)**	
3030	1624 9733 08	1	CAPILLARY	**(09/03/2017 - 12/07/2017)** CAPPRE:IEC + FREQ:50HZ + MOVOL:400V **(13/07/2017 - 31/07/2018)** (MOVOL:200V , MOVOL:400V , MOVOL:500V) + CAPPRE:IEC + FREQ:50HZ	
3030	1624 9733 05	1	CAPILLARY	**(20/07/2017 - 19/03/2019)** ((MOVOL:200V , MOVOL:380V , MOVOL:460V) + CAPPRE:IEC , (MOVOL:230V , MOVOL:460V) + CAPPRE:ULCUL) + FREQ:60HZ	
3050	0348 0101 13	1	CABLE TIE	**(09/03/2017 - 12/07/2017)** CAPPRE:IEC + FREQ:50HZ + MOVOL:400V **(13/07/2017 - 19/07/2017)** (MOVOL:200V , MOVOL:400V , MOVOL:500V) + CAPPRE:IEC + FREQ:50HZ **(20/07/2017 - ...)**	
3060	1624 2293 00	1	FILTER DRYER	**(09/03/2017 - 12/07/2017)** CAPPRE:IEC + FREQ:50HZ + MOVOL:400V **(13/07/2017 - 19/07/2017)** (MOVOL:200V , MOVOL:400V , MOVOL:500V) + CAPPRE:IEC + FREQ:50HZ **(20/07/2017 - ...)**	

Legend:

CAPPRE:IEC - Component approval electrical:IEC
CAPPRE:ULCUL - Component approval electrical:UL/cUL
FREQ:50HZ - Frequency:50 Hz
FREQ:60HZ - Frequency:60 Hz
IDRY:Y - Integrated dryer:Yes
MODEL:GA75VP_16 - Model:GA 75VSD+
MOVOL:200V - Supply voltage:200 V
MOVOL:230V - Supply voltage:230 V
MOVOL:380V - Supply voltage:380 V
MOVOL:400V - Supply voltage:400 V
MOVOL:460V - Supply voltage:460 V
MOVOL:500V - Supply voltage:500 V

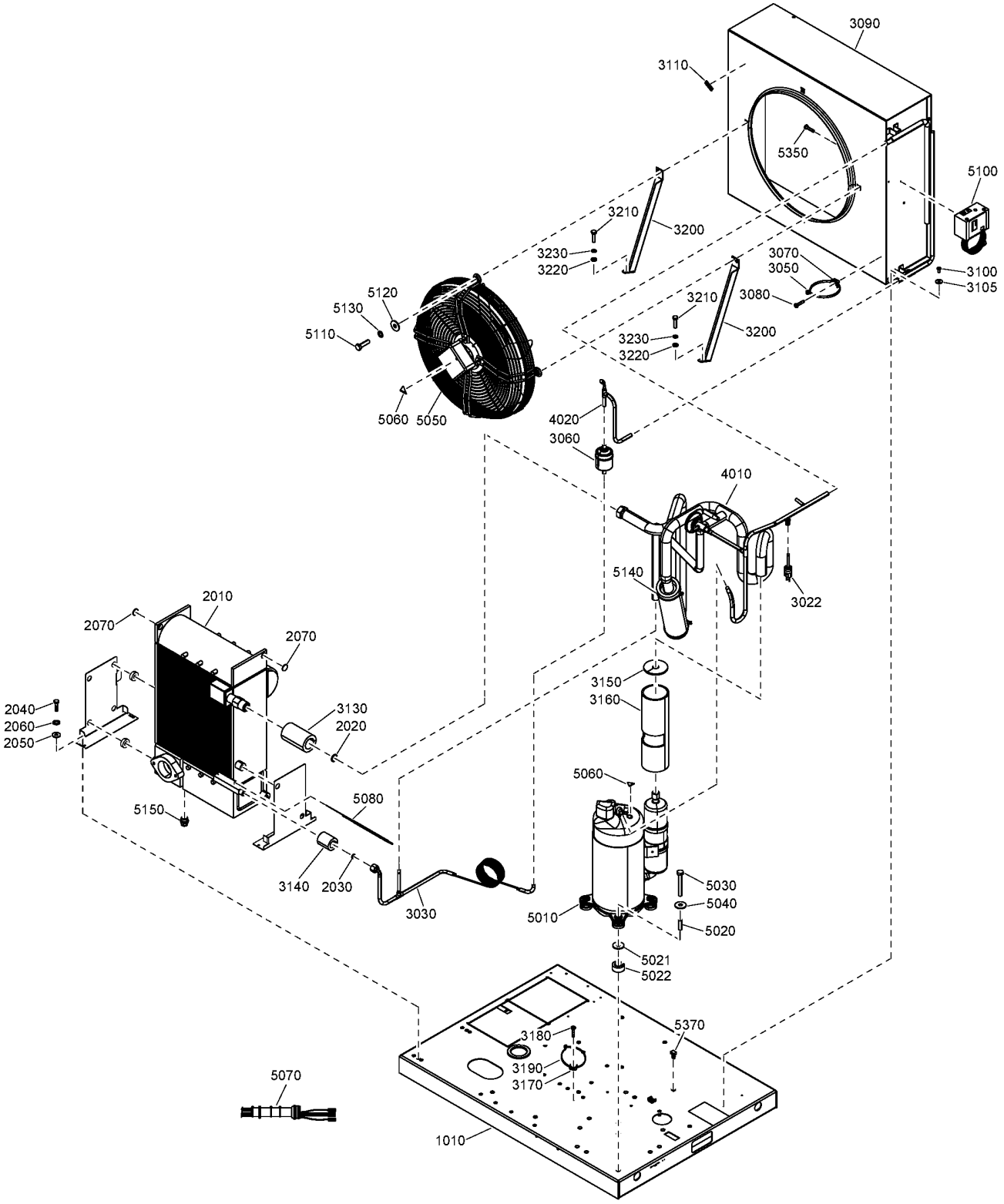
3090
3110
5350
5100
3210
3200
3230
3220
3070
3050
3100
3105
3080
5120
5130
5110
5060
5050
4020
3060
4010
5140
3022
2010
2070
2070
2040
2060
2050
3130
2020
3150
3160
5060
5080
5150
3140
2030
3030
5010
5030
5040
5020
5021
5022
3180
5370
3190
3170
5070
1010

Ref	Part Number	Qty	Name	Validity	R.
3070	0348 0110 03	1	ANCHOR PLATE	**(09/03/2017 - 12/07/2017)** CAPPRE:IEC + FREQ:50HZ + MOVOL:400V **(13/07/2017 - 19/07/2017)** (MOVOL:200V , MOVOL:400V , MOVOL:500V) + CAPPRE:IEC + FREQ:50HZ **(20/07/2017 - ...)**	
3080	~~0226 3343 07~~	1	TAPPING SCREW	**(09/03/2017 - 12/07/2017)** CAPPRE:IEC + FREQ:50HZ + MOVOL:400V **(13/07/2017 - 19/07/2017)** (MOVOL:200V , MOVOL:400V , MOVOL:500V) + CAPPRE:IEC + FREQ:50HZ **(20/07/2017 - ...)**	
	Substituted by:	0226 0047 13 - TAPPING SCREW (quantity: 1)			
3090	1627 1547 00	1	CONDENSER	**(09/03/2017 - 12/07/2017)** CAPPRE:IEC + FREQ:50HZ + MOVOL:400V **(13/07/2017 - 19/07/2017)** (MOVOL:200V , MOVOL:400V , MOVOL:500V) + CAPPRE:IEC + FREQ:50HZ **(20/07/2017 - ...)**	
3100	0226 3256 00	4	SCREW	**(09/03/2017 - 12/07/2017)** CAPPRE:IEC + FREQ:50HZ + MOVOL:400V **(13/07/2017 - 19/07/2017)** (MOVOL:200V , MOVOL:400V , MOVOL:500V) + CAPPRE:IEC + FREQ:50HZ **(20/07/2017 - ...)**	
3105	0300 0274 70	4	WASHER	**(09/03/2017 - 12/07/2017)** CAPPRE:IEC + FREQ:50HZ + MOVOL:400V **(13/07/2017 - 19/07/2017)** (MOVOL:200V , MOVOL:400V , MOVOL:500V) + CAPPRE:IEC + FREQ:50HZ **(20/07/2017 - ...)**	
3110	1617 2385 00	1	ROTATION ARROW	**(09/03/2017 - 12/07/2017)** CAPPRE:IEC + FREQ:50HZ + MOVOL:400V **(13/07/2017 - 19/07/2017)** (MOVOL:200V , MOVOL:400V , MOVOL:500V) + CAPPRE:IEC + FREQ:50HZ **(20/07/2017 - ...)**	
3130	2204 1608 05	2	INSULATION	**(17/09/2018 - ...)**	
3130	1624 2386 00	2	INSULATION OUTLET HE	**(09/03/2017 - 12/07/2017)** CAPPRE:IEC + FREQ:50HZ + MOVOL:400V **(13/07/2017 - 19/07/2017)** (MOVOL:200V , MOVOL:400V , MOVOL:500V) + CAPPRE:IEC + FREQ:50HZ **(20/07/2017 - 16/09/2018)**	
3140	1617 2361 00	1	INSULATION INLET HE	**(09/03/2017 - 12/07/2017)** CAPPRE:IEC + FREQ:50HZ + MOVOL:400V **(13/07/2017 - 19/07/2017)** (MOVOL:200V , MOVOL:400V , MOVOL:500V) + CAPPRE:IEC + FREQ:50HZ **(20/07/2017 - ...)**	
3150	1624 9614 00	1	INSULATION THERMAL	**(09/03/2017 - 12/07/2017)** CAPPRE:IEC + FREQ:50HZ + MOVOL:400V **(13/07/2017 - 19/07/2017)** (MOVOL:200V , MOVOL:400V , MOVOL:500V) + CAPPRE:IEC + FREQ:50HZ **(20/07/2017 - ...)**	
3160	1624 9712 00	1	INSULATION THERMAL	**(09/03/2017 - 12/07/2017)** CAPPRE:IEC + FREQ:50HZ + MOVOL:400V **(13/07/2017 - 19/07/2017)** (MOVOL:200V , MOVOL:400V , MOVOL:500V) + CAPPRE:IEC + FREQ:50HZ **(20/07/2017 - ...)**	
3170	0348 0110 03	1	ANCHOR PLATE	**(09/03/2017 - 12/07/2017)** CAPPRE:IEC + FREQ:50HZ + MOVOL:400V **(13/07/2017 - 19/07/2017)** (MOVOL:200V , MOVOL:400V , MOVOL:500V) + CAPPRE:IEC + FREQ:50HZ **(20/07/2017 - ...)**	
3180	~~0226 3343 07~~	1	TAPPING SCREW	**(09/03/2017 - 12/07/2017)** CAPPRE:IEC + FREQ:50HZ + MOVOL:400V **(13/07/2017 - 19/07/2017)** (MOVOL:200V , MOVOL:400V , MOVOL:500V) + CAPPRE:IEC + FREQ:50HZ **(20/07/2017 - ...)**	
	Substituted by:	0226 0047 13 - TAPPING SCREW (quantity: 1)			
3190	0348 0101 13	1	CABLE TIE	**(09/03/2017 - 12/07/2017)** CAPPRE:IEC + FREQ:50HZ + MOVOL:400V **(13/07/2017 - 19/07/2017)** (MOVOL:200V , MOVOL:400V , MOVOL:500V) + CAPPRE:IEC + FREQ:50HZ **(20/07/2017 - ...)**	
3200	1624 9983 00	2	SUPPORT	**(09/03/2017 - 12/07/2017)** CAPPRE:IEC + FREQ:50HZ + MOVOL:400V **(13/07/2017 - 19/07/2017)** (MOVOL:200V , MOVOL:400V , MOVOL:500V) + CAPPRE:IEC + FREQ:50HZ **(20/07/2017 - ...)**	

Legend:

CAPPRE:IEC - Component approval electrical:IEC
CAPPRE:ULCUL - Component approval electrical:UL/cUL
FREQ:50HZ - Frequency:50 Hz
FREQ:60HZ - Frequency:60 Hz
IDRY:Y - Integrated dryer:Yes
MODEL:GA75VP_16 - Model:GA 75VSD+
MOVOL:200V - Supply voltage:200 V
MOVOL:230V - Supply voltage:230 V
MOVOL:380V - Supply voltage:380 V
MOVOL:400V - Supply voltage:400 V
MOVOL:460V - Supply voltage:460 V
MOVOL:500V - Supply voltage:500 V

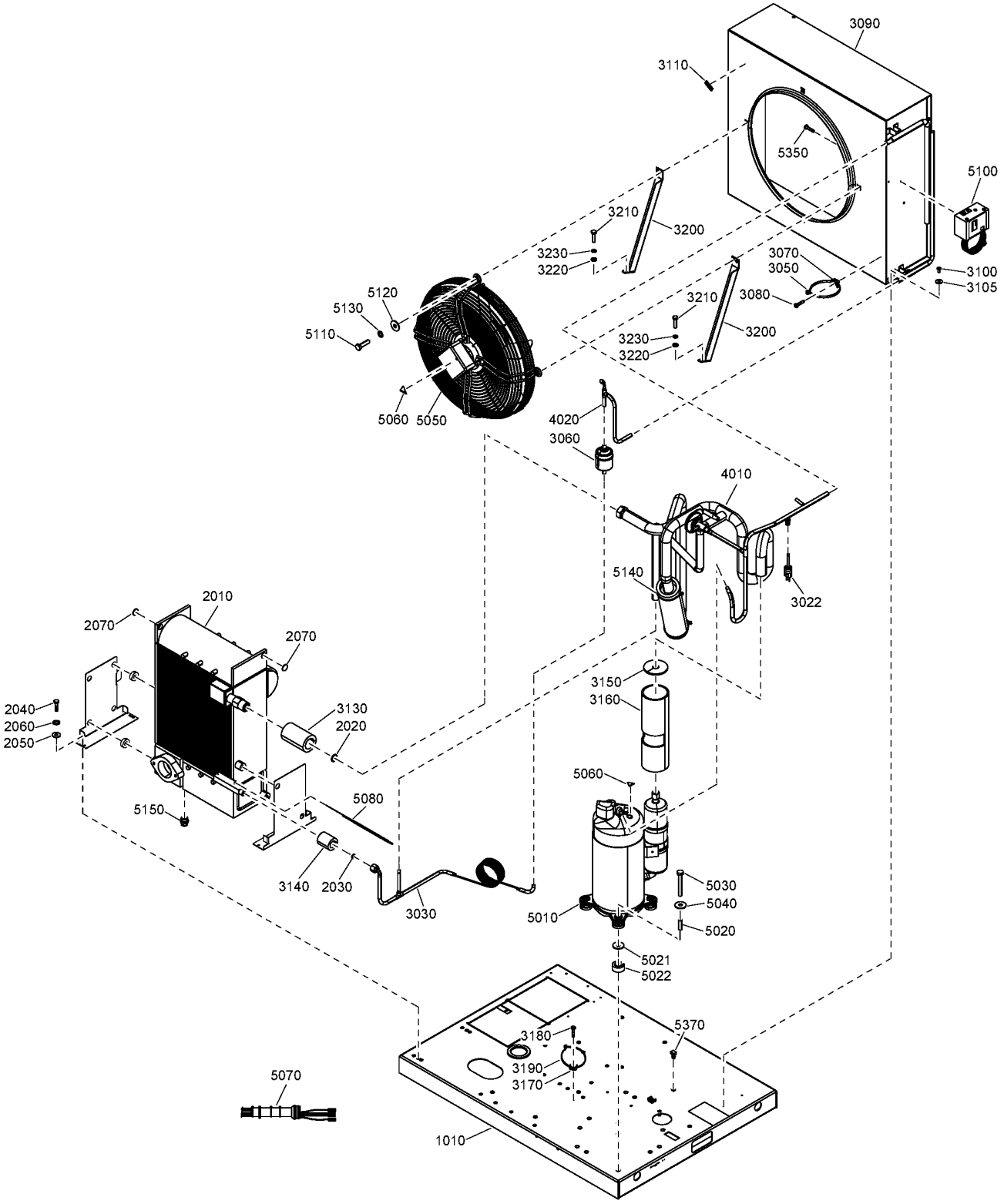
3090
3110
5350
5100
3210
3200
3230
3220
3070
3050
3100
3105
3080
5120
5130
5110
5060
5050
4020
3060
4010
5140
3022
2010
2070
2070
2040
2060
2050
3130
2020
3150
3160
5060
5080
5150
3140
2030
3030
5010
5030
5040
5020
5021
5022
3180
5370
3190
3170
5070
1010

Ref	Part Number	Qty	Name	Validity	R.
3210	0147 1249 03	2	HEXAGON BOLT	**(09/03/2017 - 12/07/2017)** CAPPRE:IEC + FREQ:50HZ + MOVOL:400V **(13/07/2017 - 19/07/2017)** (MOVOL:200V , MOVOL:400V , MOVOL:500V) + CAPPRE:IEC + FREQ:50HZ **(20/07/2017 - ...)**	
3220	0301 2321 00	2	PLAIN WASHER	**(09/03/2017 - 12/07/2017)** CAPPRE:IEC + FREQ:50HZ + MOVOL:400V **(13/07/2017 - 19/07/2017)** (MOVOL:200V , MOVOL:400V , MOVOL:500V) + CAPPRE:IEC + FREQ:50HZ **(20/07/2017 - ...)**	
3230	0333 3120 00	2	WASHER	**(09/03/2017 - 12/07/2017)** CAPPRE:IEC + FREQ:50HZ + MOVOL:400V **(13/07/2017 - 19/07/2017)** (MOVOL:200V , MOVOL:400V , MOVOL:500V) + CAPPRE:IEC + FREQ:50HZ **(20/07/2017 - ...)**	
4010	1627 1553 00	1	PIPE	**(09/03/2017 - 12/07/2017)** CAPPRE:IEC + FREQ:50HZ + MOVOL:400V **(13/07/2017 - 31/07/2018)** (MOVOL:200V , MOVOL:400V , MOVOL:500V) + CAPPRE:IEC + FREQ:50HZ	
4010	1627 1556 00	1	PIPE	**(20/07/2017 - 19/03/2019)** ((MOVOL:200V , MOVOL:380V , MOVOL:460V) + CAPPRE:IEC , (MOVOL:230V , MOVOL:460V) + CAPPRE:ULCUL) + FREQ:60HZ	
4020	1624 9517 00	1	PIPE ASSEMBLY	**(09/03/2017 - 12/07/2017)** CAPPRE:IEC + FREQ:50HZ + MOVOL:400V **(13/07/2017 - 19/07/2017)** (MOVOL:200V , MOVOL:400V , MOVOL:500V) + CAPPRE:IEC + FREQ:50HZ **(20/07/2017 - 31/07/2018)** **(01/08/2018 - 19/03/2019)** ((MOVOL:200V , MOVOL:380V , MOVOL:460V) + CAPPRE:IEC , (MOVOL:230V , MOVOL:460V) + CAPPRE:ULCUL) + FREQ:60HZ	
	• 1624 9352 00	1	VALVE SCHRAEDER		
5010	1617 4638 00	1	COMPRESSOR NN31Y	**(20/07/2017 - ...)** ((MOVOL:200V , MOVOL:380V , MOVOL:460V) + CAPPRE:IEC , (MOVOL:230V , MOVOL:460V) + CAPPRE:ULCUL) + FREQ:60HZ	
5010	1617 4640 00	1	COMPRESSOR NN37Y	**(09/03/2017 - 12/07/2017)** CAPPRE:IEC + FREQ:50HZ + MOVOL:400V **(13/07/2017 - ...)** (MOVOL:200V , MOVOL:400V , MOVOL:500V) + CAPPRE:IEC + FREQ:50HZ	
5020	1624 2698 00	4	BUSHING	**(09/03/2017 - 12/07/2017)** CAPPRE:IEC + FREQ:50HZ + MOVOL:400V **(13/07/2017 - 19/07/2017)** (MOVOL:200V , MOVOL:400V , MOVOL:500V) + CAPPRE:IEC + FREQ:50HZ **(20/07/2017 - ...)**	
5021	0300 8019 00	4	PLAIN WASHER	**(09/03/2017 - 12/07/2017)** CAPPRE:IEC + FREQ:50HZ + MOVOL:400V **(13/07/2017 - 19/07/2017)** (MOVOL:200V , MOVOL:400V , MOVOL:500V) + CAPPRE:IEC + FREQ:50HZ **(20/07/2017 - ...)**	
5022	1627 1696 00	4	BUSHING	**(09/03/2017 - 12/07/2017)** CAPPRE:IEC + FREQ:50HZ + MOVOL:400V **(13/07/2017 - 19/07/2017)** (MOVOL:200V , MOVOL:400V , MOVOL:500V) + CAPPRE:IEC + FREQ:50HZ **(20/07/2017 - ...)**	
5030	0147 1332 03	4	HEXAGON BOLT	**(09/03/2017 - 12/07/2017)** CAPPRE:IEC + FREQ:50HZ + MOVOL:400V **(13/07/2017 - 19/07/2017)** (MOVOL:200V , MOVOL:400V , MOVOL:500V) + CAPPRE:IEC + FREQ:50HZ **(20/07/2017 - ...)**	
5040	0300 8019 00	4	PLAIN WASHER	**(09/03/2017 - 12/07/2017)** CAPPRE:IEC + FREQ:50HZ + MOVOL:400V **(13/07/2017 - 19/07/2017)** (MOVOL:200V , MOVOL:400V , MOVOL:500V) + CAPPRE:IEC + FREQ:50HZ **(20/07/2017 - ...)**	
5050	1624 9609 00	1	FAN	**(20/07/2017 - ...)** ((MOVOL:230V , MOVOL:460V) + CAPPRE:ULCUL , CAPPRE:IEC + MOVOL:460V) + FREQ:60HZ	
5050	1624 9608 00	1	FAN	**(09/03/2017 - 12/07/2017)** CAPPRE:IEC + FREQ:50HZ + MOVOL:400V **(13/07/2017 - 19/07/2017)** (MOVOL:200V , MOVOL:400V , MOVOL:500V) + CAPPRE:IEC + FREQ:50HZ **(20/07/2017 - ...)** ((MOVOL:200V , MOVOL:380V) + FREQ:60HZ , (MOVOL:200V , MOVOL:400V , MOVOL:500V) + FREQ:50HZ) + CAPPRE:IEC	

Legend:

CAPPRE:IEC - Component approval electrical:IEC
CAPPRE:ULCUL - Component approval electrical:UL/cUL
FREQ:50HZ - Frequency:50 Hz
FREQ:60HZ - Frequency:60 Hz
IDRY:Y - Integrated dryer:Yes
MODEL:GA75VP_16 - Model:GA 75VSD+
MOVOL:200V - Supply voltage:200 V
MOVOL:230V - Supply voltage:230 V
MOVOL:380V - Supply voltage:380 V
MOVOL:400V - Supply voltage:400 V
MOVOL:460V - Supply voltage:460 V
MOVOL:500V - Supply voltage:500 V

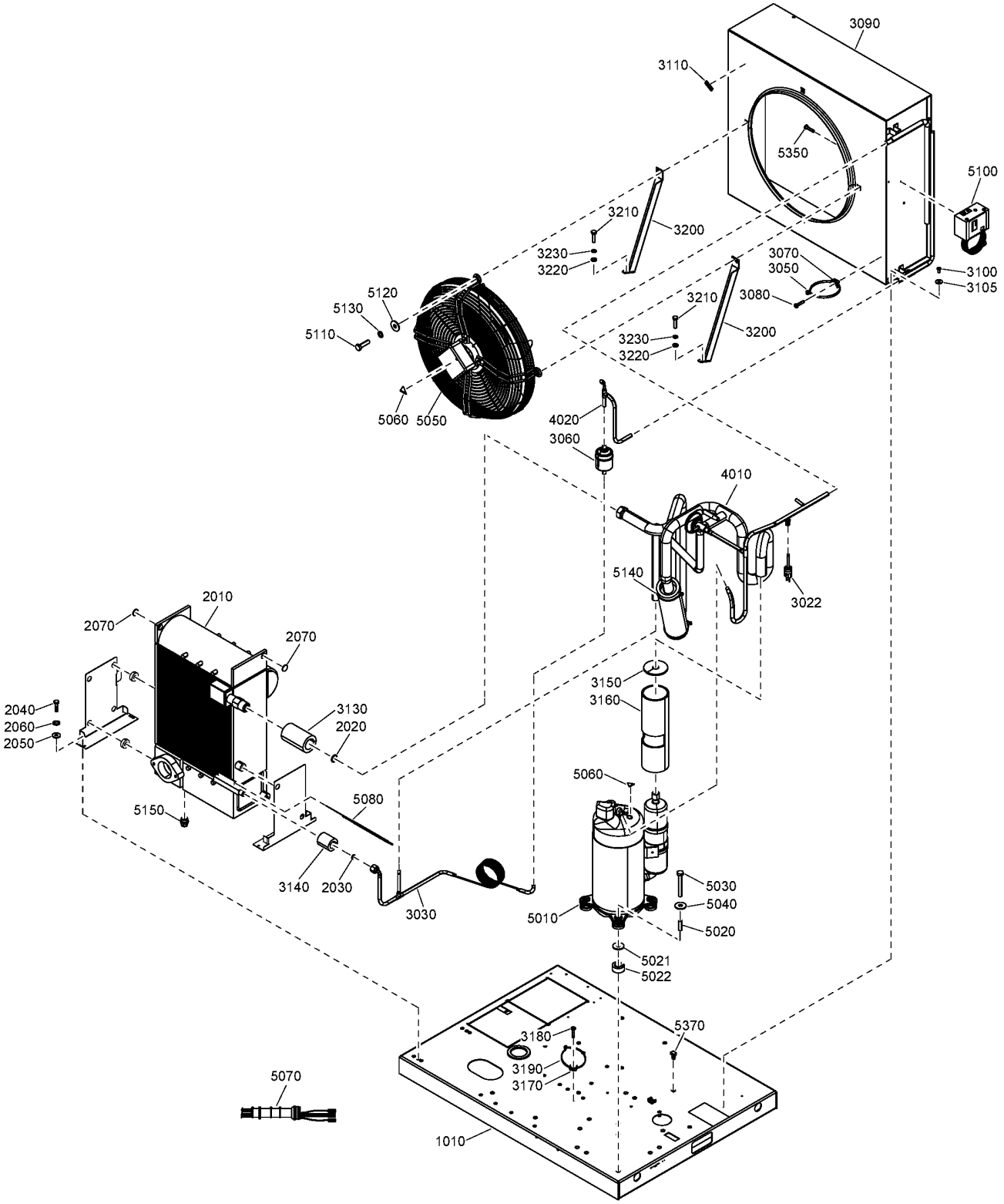
3090
3110
5350
5100
3210
3200
3230
3220
3070
3050
3100
3105
3080
5120
5130
5110
5060
5050
4020
3060
4010
5140
3022
2010
2070
2070
2040
2060
2050
3130
2020
3150
3160
5060
5080
5150
3140
2030
3030
5010
5030
5040
5020
5021
5022
5370
3180
3190
3170
5070
1010

Ref	Part Number	Qty	Name	Validity	R.
5060	1088 1001 01	4	WARNING MARK	**(09/03/2017 - 12/07/2017)** CAPPRE:IEC + FREQ:50HZ + MOVOL:400V **(13/07/2017 - 19/07/2017)** (MOVOL:200V , MOVOL:400V , MOVOL:500V) + CAPPRE:IEC + FREQ:50HZ **(20/07/2017 - ...)**	
5070	1624 1940 00	1	WIRING	**(09/03/2017 - 12/07/2017)** CAPPRE:IEC + FREQ:50HZ + MOVOL:400V **(13/07/2017 - 19/07/2017)** (MOVOL:200V , MOVOL:400V , MOVOL:500V) + CAPPRE:IEC + FREQ:50HZ **(20/07/2017 - ...)**	
5080	1617 3077 90	1	TEMPERATURE SENSOR	**(09/03/2017 - 12/07/2017)** CAPPRE:IEC + FREQ:50HZ + MOVOL:400V **(13/07/2017 - 19/07/2017)** (MOVOL:200V , MOVOL:400V , MOVOL:500V) + CAPPRE:IEC + FREQ:50HZ **(20/07/2017 - ...)**	
5100	1089 9139 25	1	PRESSURE SWITCH	**(24/03/2017 - 12/07/2017)** CAPPRE:IEC + FREQ:50HZ + MOVOL:400V **(13/07/2017 - 19/07/2017)** (MOVOL:200V , MOVOL:400V , MOVOL:500V) + CAPPRE:IEC + FREQ:50HZ **(20/07/2017 - ...)**	
5110	0147 1326 03	4	SCREW	**(09/03/2017 - 12/07/2017)** CAPPRE:IEC + FREQ:50HZ + MOVOL:400V **(13/07/2017 - 19/07/2017)** (MOVOL:200V , MOVOL:400V , MOVOL:500V) + CAPPRE:IEC + FREQ:50HZ **(20/07/2017 - ...)**	
5120	0300 8019 00	4	PLAIN WASHER	**(09/03/2017 - 12/07/2017)** CAPPRE:IEC + FREQ:50HZ + MOVOL:400V **(13/07/2017 - 19/07/2017)** (MOVOL:200V , MOVOL:400V , MOVOL:500V) + CAPPRE:IEC + FREQ:50HZ **(20/07/2017 - ...)**	
5130	0333 3227 00	4	WASHER	**(09/03/2017 - 12/07/2017)** CAPPRE:IEC + FREQ:50HZ + MOVOL:400V **(13/07/2017 - 19/07/2017)** (MOVOL:200V , MOVOL:400V , MOVOL:500V) + CAPPRE:IEC + FREQ:50HZ **(20/07/2017 - ...)**	
5140	0348 0101 13	4	CABLE TIE	**(09/03/2017 - 12/07/2017)** CAPPRE:IEC + FREQ:50HZ + MOVOL:400V **(13/07/2017 - 19/07/2017)** (MOVOL:200V , MOVOL:400V , MOVOL:500V) + CAPPRE:IEC + FREQ:50HZ **(20/07/2017 - ...)**	
5150	0583 8100 71	1	PIPE FITTING	**(09/03/2017 - 12/07/2017)** CAPPRE:IEC + FREQ:50HZ + MOVOL:400V **(13/07/2017 - 19/07/2017)** (MOVOL:200V , MOVOL:400V , MOVOL:500V) + CAPPRE:IEC + FREQ:50HZ **(20/07/2017 - ...)**	
5350	~~0226 3343 07~~	2	TAPPING SCREW	**(24/03/2017 - 12/07/2017)** CAPPRE:IEC + FREQ:50HZ + MOVOL:400V **(13/07/2017 - 19/07/2017)** (MOVOL:200V , MOVOL:400V , MOVOL:500V) + CAPPRE:IEC + FREQ:50HZ **(20/07/2017 - ...)**	
	Substituted by:	0226 0047 13 - TAPPING SCREW (quantity: 1)			
5370	0348 0111 06	1	CONNECTOR	**(09/03/2017 - 12/07/2017)** CAPPRE:IEC + FREQ:50HZ + MOVOL:400V **(13/07/2017 - 19/07/2017)** (MOVOL:200V , MOVOL:400V , MOVOL:500V) + CAPPRE:IEC + FREQ:50HZ **(20/07/2017 - ...)**	

Legend:

CAPPRE:IEC - Component approval electrical:IEC
CAPPRE:ULCUL - Component approval electrical:UL/cUL
FREQ:50HZ - Frequency:50 Hz
FREQ:60HZ - Frequency:60 Hz
IDRY:Y - Integrated dryer:Yes
MODEL:GA75VP_16 - Model:GA 75VSD+
MOVOL:200V - Supply voltage:200 V
MOVOL:230V - Supply voltage:230 V
MOVOL:380V - Supply voltage:380 V
MOVOL:400V - Supply voltage:400 V
MOVOL:460V - Supply voltage:460 V
MOVOL:500V - Supply voltage:500 V

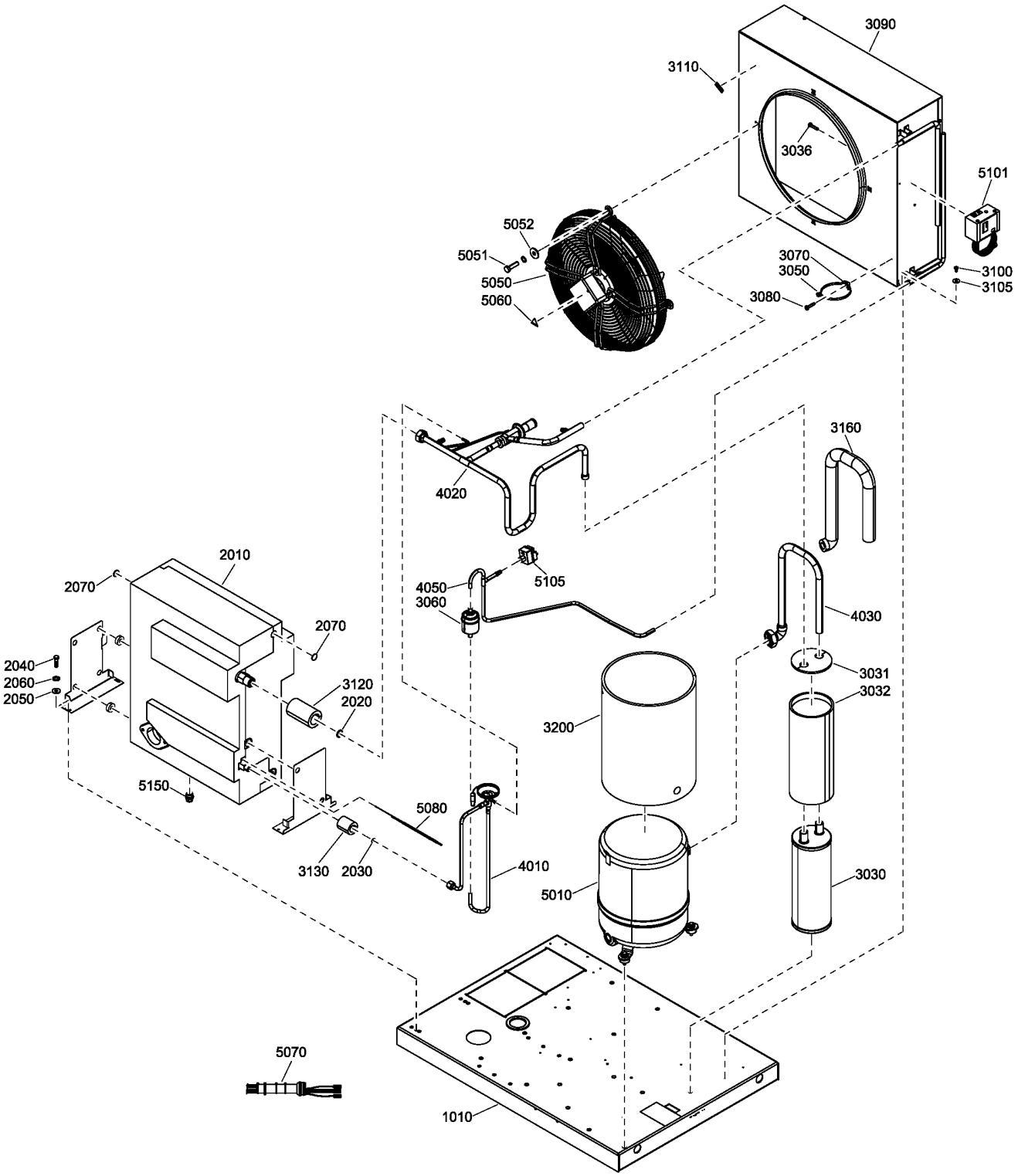
3090
3110
3036
5101
5052
5051
5050
5060
3070
3050
3080
3100
3105
3160
4020
2010
2070
4050
3060
5105
4030
2070
2040
2060
2050
3120
2020
3031
3032
3200
5150
5080
3130
2030
4010
5010
3030
5070
1010

Ref	Part Number	Qty	Name	Validity	R.
	1627 1653 80	1	AIR DRYER	(20/07/2017 - ...)	R134A
1010	1627 1651 80	1	FRAME	(20/07/2017 - ...)	
	• 1622 0000 20	1	DECAL SYMBOLS		
	• 1079 9930 30	1	LABEL		
2010	1603 6401 02	1	HEAT EXCHANGER	(20/07/2017 - ...)	
2020	~~1617 0315 00~~	1	RING (ALL)	(20/07/2017 - ...)	
	Substituted by:	1617 0165 00 - RING (quantity: 1)			
2030	1617 0092 03	1	RING	(20/07/2017 - ...)	
2040	0147 1247 03	4	HEXAGON BOLT	(20/07/2017 - ...)	
2050	0300 0274 64	4	WASHER	(20/07/2017 - ...)	
2060	0333 3220 00	4	WASHER	(20/07/2017 - ...)	
2070	1624 2451 00	2	INSULATION	(20/07/2017 - ...)	
3030	1627 1657 00	1	SEPARATOR REFRIGERANT	(20/07/2017 - ...)	
3031	1627 1659 00	1	INSULATION THERMAL	(20/07/2017 - ...)	
3032	1627 1658 00	1	INSULATION THERMAL	(20/07/2017 - ...)	
3036	~~0226 3343 07~~	3	TAPPING SCREW	(20/07/2017 - ...)	
	Substituted by:	0226 0047 13 - TAPPING SCREW (quantity: 1)			
3050	0348 0101 13	1	CABLE TIE	(20/07/2017 - ...)	
3060	1624 2293 00	1	FILTER DRYER	(20/07/2017 - ...)	
3070	0348 0110 03	1	ANCHOR PLATE	(20/07/2017 - ...)	
3080	~~0226 3343 07~~	1	TAPPING SCREW	(20/07/2017 - ...)	
	Substituted by:	0226 0047 13 - TAPPING SCREW (quantity: 1)			
3090	1627 1547 00	1	CONDENSER	(20/07/2017 - ...)	
3100	0226 3256 00	4	SCREW	(20/07/2017 - ...)	
3105	0300 0274 70	4	WASHER	(20/07/2017 - ...)	
3110	1617 2385 00	1	ROTATION ARROW	(20/07/2017 - ...)	
3120	1624 2386 00	1	INSULATION OUTLET HE	(20/07/2017 - ...)	
3130	1617 2361 00	2	INSULATION INLET HE	(20/07/2017 - ...)	
3160	1627 1837 00	1	INSULATION THERMAL	(20/07/2017 - ...)	
3200	2202 9604 00	1	INSULATION	(20/07/2017 - ...)	
4010	1627 1655 00	1	PIPE ASSY	(20/07/2017 - ...)	
4020	1627 1656 00	1	PIPE	(20/07/2017 - ...)	
	• 2202 8185 01	1	BYPASS VALVE		
4030	1627 1660 00	1	PIPE	(20/07/2017 - ...)	
4050	1627 1664 00	1	PIPE ASSY	(20/07/2017 - ...)	
5010	1614 7168 12	1	COMPRESSOR	(20/07/2017 - ...)	
5050	1624 9609 00	1	FAN	(20/07/2017 - ...)	
5051	0147 1326 03	4	SCREW	(20/07/2017 - ...)	
5052	0300 8019 00	4	PLAIN WASHER	(20/07/2017 - ...)	
5060	1088 1001 01	4	WARNING MARK	(20/07/2017 - ...)	
5070	1627 1708 00	1	WIRING	(20/07/2017 - ...)	
5080	1617 3077 90	1	TEMPERATURE SENSOR	(20/07/2017 - ...)	
5101	1089 9139 35	1	PRESSURE SWITCH	(20/07/2017 - ...)	
5105	1627 1852 00	1	HIGH PRESSURE SWITCH	(20/07/2017 - ...)	
5150	0583 8100 71	1	PIPE FITTING	(20/07/2017 - ...)	

Legend:

CAPPRE:ULCUL - Component approval electrical:UL/cUL
FREQ:60HZ - Frequency:60 Hz
IDRY:Y - Integrated dryer:Yes
MODEL:GA75VP_16 - Model:GA 75VSD+
MOVOL:575V - Supply voltage:575 V

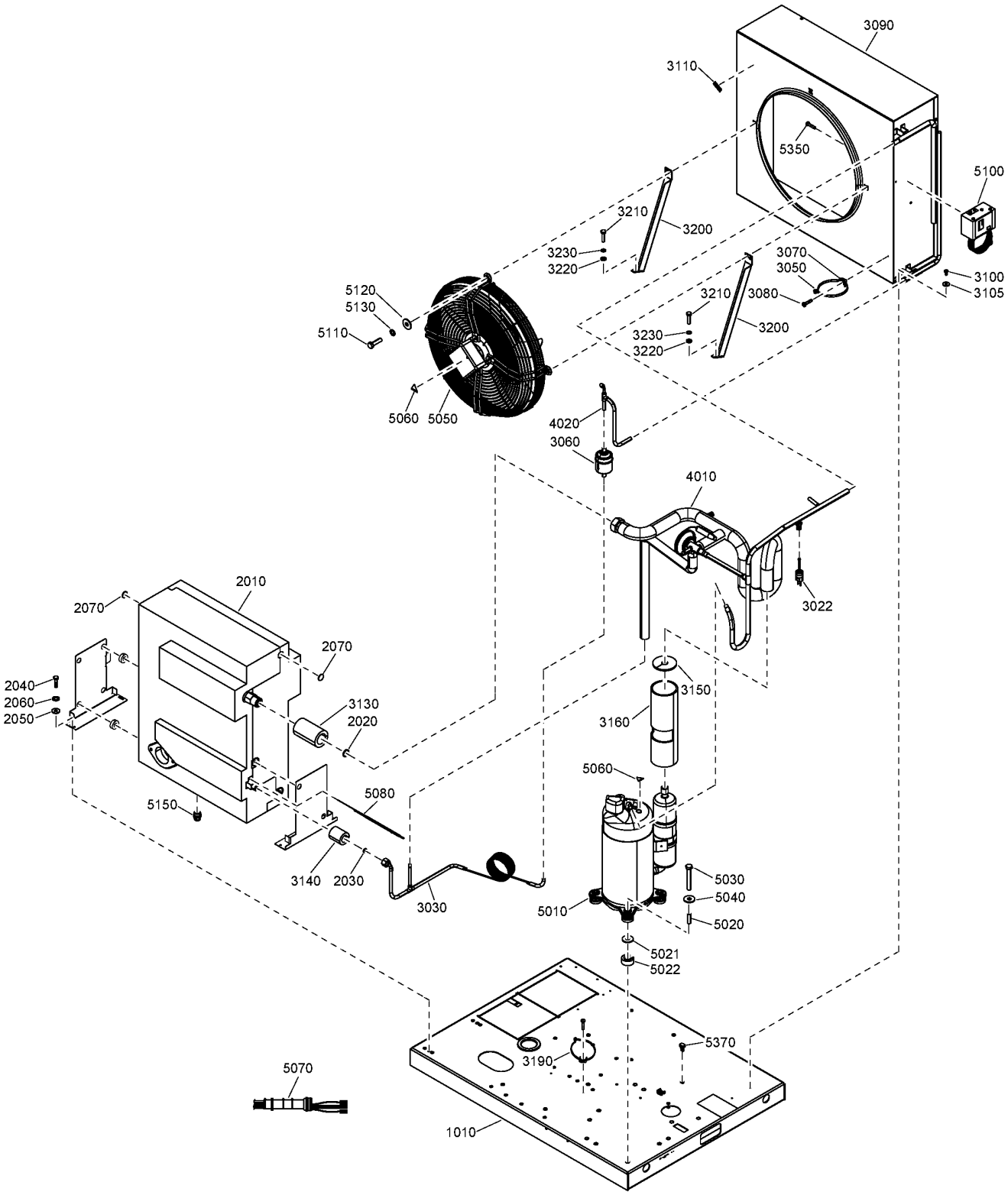
3090
3110
5350
5100
3210
3200
3230
3220
3070
3050
3100
3105
3210
3080
3200
3230
3220
5120
5130
5110
5060
5050
4020
3060
4010
3022
2010
2070
2070
2040
2060
2050
3130
2020
3150
3160
5060
5080
5150
3140
2030
3030
5030
5040
5020
5010
5021
5022
5370
3190
5070
1010

Ref	Part Number	Qty	Name	Validity	R.
	8092 2663 22	1	AIR DRYER	**(20/07/2017 - ...)** (MOVOL:200V , MOVOL:400V , MOVOL:500V) + CAPPRE:IEC + FREQ:50HZ	R410A
	8092 2663 30	1	AIR DRYER	**(20/07/2017 - ...)** ((MOVOL:230V , MOVOL:460V) + CAPPRE:ULCUL , CAPPRE:IEC + MOVOL:460V) + FREQ:60HZ	R410A
1010	1624 9506 80	1	FRAME	**(20/07/2017 - ...)**	
	• 1622 0000 20	1	DECAL SYMBOLS		
	• 1627 1828 00	1	DECAL WARNING		
2010	1603 6401 02	1	HEAT EXCHANGER	**(20/07/2017 - ...)**	
2020	~~1617 0315 00~~	1	RING	**(20/07/2017 - ...)**	
	Substituted by:	1617 0165 00 - RING (quantity: 1)			
2030	1617 0092 03	1	RING	**(20/07/2017 - ...)**	
2040	0147 1247 03	4	HEXAGON BOLT	**(20/07/2017 - ...)**	
2050	0300 0274 64	4	WASHER	**(20/07/2017 - ...)**	
2060	0333 3220 00	4	WASHER	**(20/07/2017 - ...)**	
2070	1624 2451 00	2	INSULATION	**(20/07/2017 - ...)**	
3022	1089 9139 16	1	HP SWITCH	**(20/07/2017 - ...)**	
3030	1624 9733 05	1	CAPILLARY	**(20/07/2017 - 31/07/2018)** ((MOVOL:230V , MOVOL:460V) + CAPPRE:ULCUL , CAPPRE:IEC + MOVOL:460V) + FREQ:60HZ	
3030	1624 9733 06	1	CAPILLARY	**(20/07/2017 - 27/09/2018)** (MOVOL:200V , MOVOL:400V , MOVOL:500V) + CAPPRE:IEC + FREQ:50HZ	
3050	0348 0101 13	1	CABLE TIE	**(20/07/2017 - ...)**	
3060	1624 2293 00	1	FILTER DRYER	**(20/07/2017 - ...)**	
3070	0348 0110 03	1	ANCHOR PLATE	**(20/07/2017 - ...)**	
3080	~~0226 3343 07~~	1	TAPPING SCREW	**(20/07/2017 - ...)**	
	Substituted by:	0226 0047 13 - TAPPING SCREW (quantity: 1)			
3090	1627 1547 00	1	CONDENSER	**(20/07/2017 - ...)**	
3100	0226 3256 00	4	SCREW	**(20/07/2017 - ...)**	
3105	0300 0274 70	4	WASHER	**(20/07/2017 - ...)**	
3110	1617 2385 00	1	ROTATION ARROW	**(20/07/2017 - ...)**	
3130	1624 9718 00	1	INSULATION	**(20/07/2017 - ...)**	
3140	1617 2361 00	1	INSULATION INLET HE	**(20/07/2017 - ...)**	
3150	1624 9614 00	1	INSULATION THERMAL	**(20/07/2017 - ...)**	
3160	1624 9712 00	1	INSULATION THERMAL	**(20/07/2017 - ...)**	
3190	0348 0101 13	1	CABLE TIE	**(20/07/2017 - ...)**	
3200	1624 9983 00	2	SUPPORT CONDENSER	**(20/07/2017 - ...)**	
3210	0147 1249 03	2	HEXAGON BOLT	**(20/07/2017 - ...)**	
3220	0301 2321 00	2	PLAIN WASHER	**(20/07/2017 - ...)**	
3230	0333 3120 00	2	WASHER	**(20/07/2017 - ...)**	
4010	1627 1557 00	1	PIPE	**(20/07/2017 - 31/07/2018)** ((MOVOL:230V , MOVOL:460V) + CAPPRE:ULCUL , CAPPRE:IEC + MOVOL:460V) + FREQ:60HZ	
4010	1627 1554 00	1	PIPE	**(20/07/2017 - 27/09/2018)** (MOVOL:200V , MOVOL:400V , MOVOL:500V) + CAPPRE:IEC + FREQ:50HZ	
4020	1624 9517 00	1	PIPE ASSEMBLY	**(20/07/2017 - 31/07/2018)** **(01/08/2018 - 27/09/2018)** (MOVOL:200V , MOVOL:400V , MOVOL:500V) + CAPPRE:IEC + FREQ:50HZ	
	• 1624 9352 00	1	VALVE SCHRAEDER		
5010	1617 4638 00	1	COMPRESSOR NN31Y	**(20/07/2017 - ...)** ((MOVOL:230V , MOVOL:460V) + CAPPRE:ULCUL , CAPPRE:IEC + MOVOL:460V) + FREQ:60HZ	
5010	1617 4640 00	1	COMPRESSOR NN37Y	**(20/07/2017 - ...)** (MOVOL:200V , MOVOL:400V , MOVOL:500V) + CAPPRE:IEC + FREQ:50HZ	
5020	1624 2698 00	4	BUSHING	**(20/07/2017 - ...)**	
5021	0300 8019 00	4	PLAIN WASHER	**(20/07/2017 - ...)**	

Legend:

CAPPRE:IEC - Component approval electrical:IEC
CAPPRE:ULCUL - Component approval electrical:UL/cUL
FREQ:50HZ - Frequency:50 Hz
FREQ:60HZ - Frequency:60 Hz
IDRY:Y - Integrated dryer:Yes
MODEL:GA90VP_16 - Model:GA 90VSD+
MOVOL:200V - Supply voltage:200 V
MOVOL:230V - Supply voltage:230 V
MOVOL:400V - Supply voltage:400 V
MOVOL:460V - Supply voltage:460 V
MOVOL:500V - Supply voltage:500 V

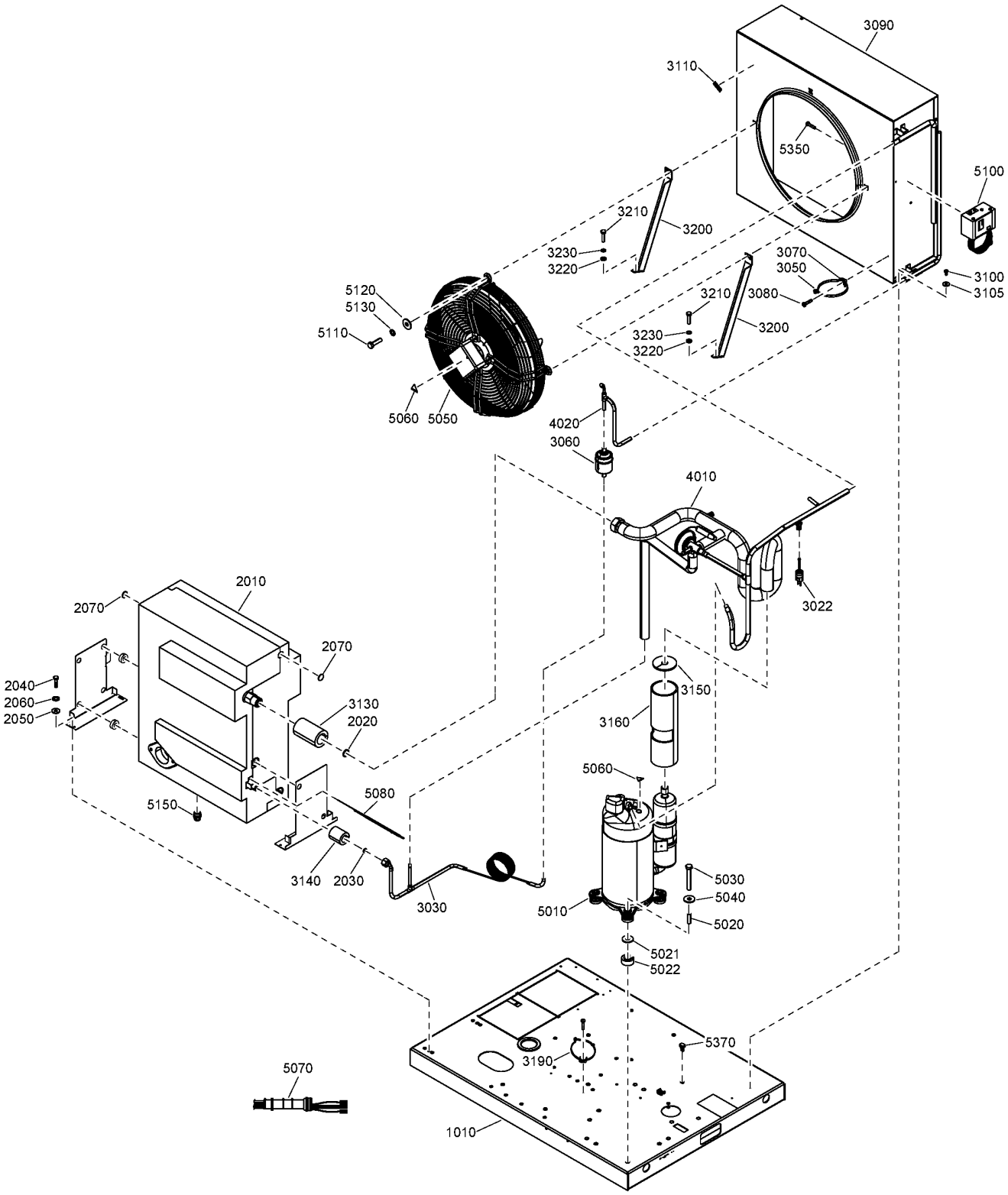
3090
3110
5350
5100
3210
3200
3230
3220
3070
3050
3100
3105
3210
3080
3200
3230
3220
5120
5130
5110
5060
5050
4020
3060
4010
3022
2010
2070
2070
2040
2060
2050
3130
2020
3150
3160
5060
5080
5150
3140
2030
3030
5030
5040
5020
5010
5021
5022
5370
3190
5070
1010

20.6 - Components - GA 90 VSD+ - ID 286 (200V-400V-500V/50Hz, 460V/60Hz) - IEC, 230V-460V/60Hz UL-cUL (20/07/2017 - 27/09/2018)

(((MOVOL:200V , MOVOL:400V , MOVOL:500V) + FREQ:50HZ , FREQ:60HZ + MOVOL:460V) + CAPPRE:IEC , (MOVOL:230V , MOVOL:460V) + CAPPRE:ULCUL + FREQ:60HZ) + IDRY:Y + MODEL:GA90VP_16

Ref	Part Number	Qty	Name	Validity	R.
5022	1627 1696 00	4	BUSHING	**(20/07/2017 - ...)**	
5030	0147 1332 03	4	HEXAGON BOLT	**(20/07/2017 - ...)**	
5040	0300 8019 00	4	PLAIN WASHER	**(20/07/2017 - ...)**	
5050	1624 9608 00	1	FAN	**(20/07/2017 - ...)** (MOVOL:200V , MOVOL:400V , MOVOL:500V) + CAPPRE:IEC + FREQ:50HZ	
5050	1624 9609 00	1	FAN	**(20/07/2017 - ...)** ((MOVOL:230V , MOVOL:460V) + CAPPRE:ULCUL , CAPPRE:IEC + MOVOL:460V) + FREQ:60HZ	
5060	1088 1001 01	4	WARNING MARK	**(20/07/2017 - ...)**	
5070	1624 1940 00	1	WIRING	**(20/07/2017 - ...)**	
5080	1617 3077 90	1	TEMPERATURE SENSOR	**(20/07/2017 - ...)**	
5100	1089 9139 25	1	PRESSURE SWITCH	**(20/07/2017 - ...)**	
5110	0147 1326 03	4	SCREW	**(20/07/2017 - ...)**	
5120	0300 8019 00	4	PLAIN WASHER	**(20/07/2017 - ...)**	
5130	0333 3227 00	4	WASHER	**(20/07/2017 - ...)**	
5150	0583 8100 71	1	PIPE FITTING	**(20/07/2017 - ...)**	
5350	~~0226 3343 07~~	2	TAPPING SCREW	**(20/07/2017 - ...)**	
	Substituted by:	0226 0047 13 - TAPPING SCREW (quantity: 1)			
5370	0348 0111 06	1	CONNECTOR	**(20/07/2017 - ...)**	

Legend:

CAPPRE:IEC - Component approval electrical:IEC
CAPPRE:ULCUL - Component approval electrical:UL/cUL
FREQ:50HZ - Frequency:50 Hz
FREQ:60HZ - Frequency:60 Hz
IDRY:Y - Integrated dryer:Yes
MODEL:GA90VP_16 - Model:GA 90VSD+
MOVOL:200V - Supply voltage:200 V
MOVOL:230V - Supply voltage:230 V
MOVOL:400V - Supply voltage:400 V
MOVOL:460V - Supply voltage:460 V
MOVOL:500V - Supply voltage:500 V

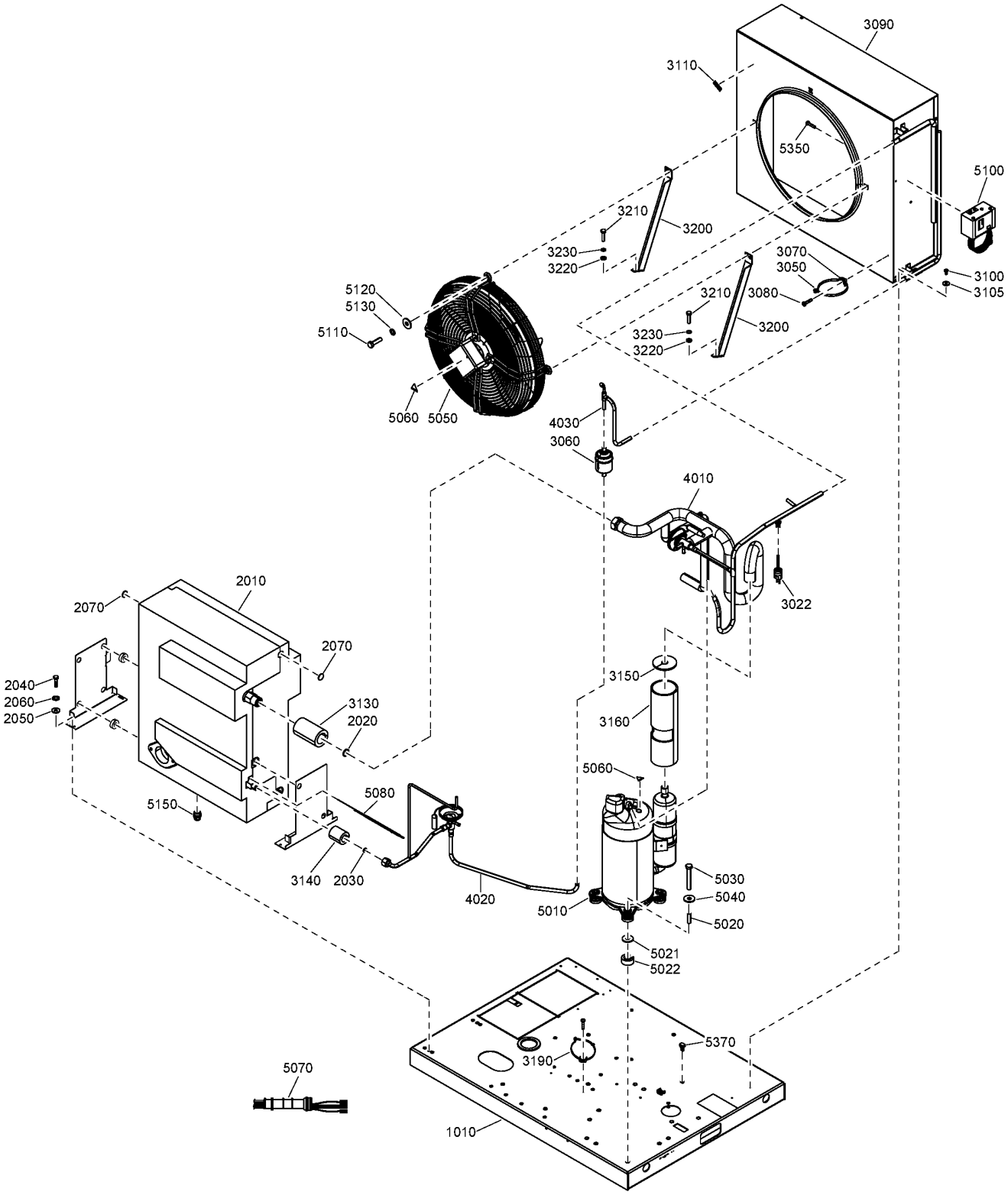
3090
3110
5350
5100
3210
3200
3230
3220
3070
3050
3100
3105
3080
5120
5130
5110
5060
5050
4030
3060
4010
3022
2010
2070
2040
2060
2050
3130
2020
3150
3160
5060
5080
5150
3140
2030
4020
5010
5030
5040
5020
5021
5022
5370
3190
5070
1010

Ref	Part Number	Qty	Name	Validity	R.
	8092 2663 22	1	AIR DRYER	**(20/07/2017 - ...)** (MOVOL:200V , MOVOL:400V , MOVOL:500V) + CAPPRE:IEC + FREQ:50HZ	R410A
	8092 2663 30	1	AIR DRYER	**(20/07/2017 - ...)** ((MOVOL:230V , MOVOL:460V) + CAPPRE:ULCUL , CAPPRE:IEC + MOVOL:460V) + FREQ:60HZ	R410A
1010	1624 9506 80	1	FRAME	**(20/07/2017 - ...)**	
	• 1622 0000 20	1	DECAL SYMBOLS		
	• 1627 1828 00	1	DECAL WARNING		
2010	1603 6401 02	1	HEAT EXCHANGER	**(20/07/2017 - ...)**	
2020	~~1617 0315 00~~	1	RING	**(20/07/2017 - ...)**	
	Substituted by:	1617 0165 00 - RING (quantity: 1)			
2030	1617 0092 03	1	RING	**(20/07/2017 - ...)**	
2040	0147 1247 03	4	HEXAGON BOLT	**(20/07/2017 - ...)**	
2050	0300 0274 64	4	WASHER	**(20/07/2017 - ...)**	
2060	0333 3220 00	4	WASHER	**(20/07/2017 - ...)**	
2070	1624 2451 00	2	INSULATION	**(20/07/2017 - ...)**	
3022	1089 9139 16	1	HP SWITCH	**(20/07/2017 - ...)**	
3050	0348 0101 13	1	CABLE TIE	**(20/07/2017 - ...)**	
3060	1624 2293 00	1	FILTER DRYER	**(20/07/2017 - ...)**	
3070	0348 0110 03	1	ANCHOR PLATE	**(20/07/2017 - ...)**	
3080	~~0226 3343 07~~	1	TAPPING SCREW	**(20/07/2017 - ...)**	
	Substituted by:	0226 0047 13 - TAPPING SCREW (quantity: 1)			
3090	1627 1547 00	1	CONDENSER	**(20/07/2017 - ...)**	
3100	0226 3256 00	4	SCREW	**(20/07/2017 - ...)**	
3105	0300 0274 70	4	WASHER	**(20/07/2017 - ...)**	
3110	1617 2385 00	1	ROTATION ARROW	**(20/07/2017 - ...)**	
3130	1624 9718 00	1	INSULATION	**(20/07/2017 - ...)**	
3140	1617 2361 00	1	INSULATION INLET HE	**(20/07/2017 - ...)**	
3150	1624 9614 00	1	INSULATION THERMAL	**(20/07/2017 - ...)**	
3160	1624 9712 00	1	INSULATION THERMAL	**(20/07/2017 - ...)**	
3190	0348 0101 13	1	CABLE TIE	**(20/07/2017 - ...)**	
3200	1624 9983 00	2	SUPPORT CONDENSER	**(20/07/2017 - ...)**	
3210	0147 1249 03	2	HEXAGON BOLT	**(20/07/2017 - ...)**	
3220	0301 2321 00	2	PLAIN WASHER	**(20/07/2017 - ...)**	
3230	0333 3120 00	2	WASHER	**(20/07/2017 - ...)**	
4010	2204 2103 00	1	PIPE ASSEMBLY	**(28/09/2018 - ...)** (MOVOL:200V , MOVOL:400V , MOVOL:500V) + CAPPRE:IEC + FREQ:50HZ	
4010	2204 2104 00	1	PIPE ASSEMBLY	**(28/09/2018 - ...)** ((MOVOL:230V , MOVOL:460V) + CAPPRE:ULCUL , CAPPRE:IEC + MOVOL:460V) + FREQ:60HZ	
4020	2204 2093 00	1	PIPE	**(28/09/2018 - ...)**	
4030	1624 9517 00	1	PIPE ASSEMBLY	**(28/09/2018 - ...)**	
5010	1617 4638 00	1	COMPRESSOR NN31Y	**(20/07/2017 - ...)** ((MOVOL:230V , MOVOL:460V) + CAPPRE:ULCUL , CAPPRE:IEC + MOVOL:460V) + FREQ:60HZ	
5010	1617 4640 00	1	COMPRESSOR NN37Y	**(20/07/2017 - ...)** (MOVOL:200V , MOVOL:400V , MOVOL:500V) + CAPPRE:IEC + FREQ:50HZ	
5020	1624 2698 00	4	BUSHING	**(20/07/2017 - ...)**	
5021	0300 8019 00	4	PLAIN WASHER	**(20/07/2017 - ...)**	
5022	1627 1696 00	4	BUSHING	**(20/07/2017 - ...)**	
5030	0147 1332 03	4	HEXAGON BOLT	**(20/07/2017 - ...)**	
5040	0300 8019 00	4	PLAIN WASHER	**(20/07/2017 - ...)**	
5050	1624 9608 00	1	FAN	**(20/07/2017 - ...)** (MOVOL:200V , MOVOL:400V , MOVOL:500V) + CAPPRE:IEC + FREQ:50HZ	

Legend:

CAPPRE:IEC - Component approval electrical:IEC
CAPPRE:ULCUL - Component approval electrical:UL/cUL
FREQ:50HZ - Frequency:50 Hz
FREQ:60HZ - Frequency:60 Hz
IDRY:Y - Integrated dryer:Yes
MODEL:GA90VP_16 - Model:GA 90VSD+
MOVOL:200V - Supply voltage:200 V
MOVOL:230V - Supply voltage:230 V
MOVOL:400V - Supply voltage:400 V
MOVOL:460V - Supply voltage:460 V
MOVOL:500V - Supply voltage:500 V

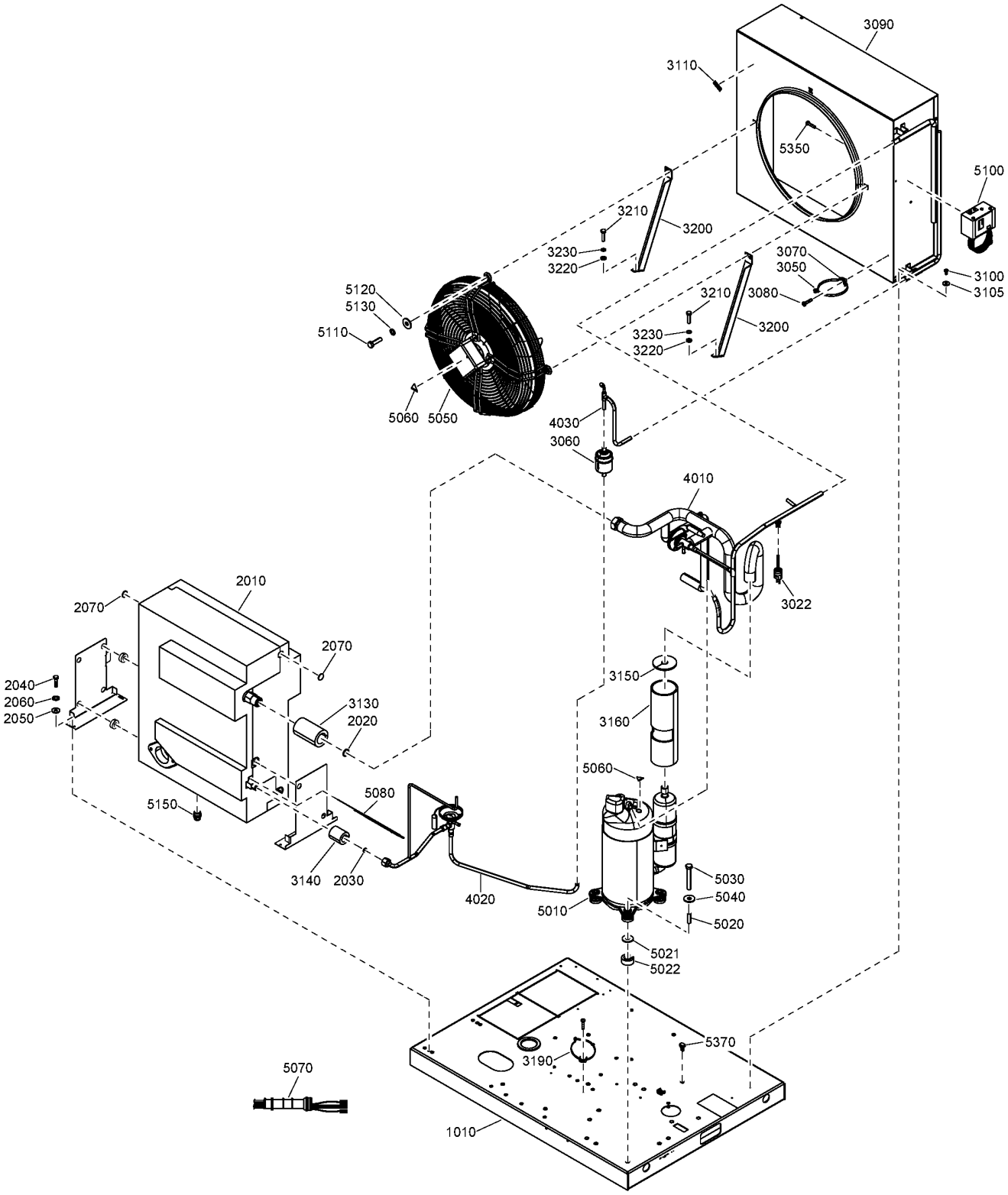
3090
3110
5350
5100
3210
3200
3230
3220
3070
3050
3100
3105
3080
5120
5130
5110
5060
5050
4030
3060
4010
3022
2010
2070
2040
2060
2050
3130
2020
3150
3160
5060
5080
5150
3140
2030
4020
5010
5030
5040
5020
5021
5022
5370
3190
5070
1010

20.7 - Components - GA 90 VSD+ - ID 286 (200V-400V-500V/50Hz, 460V/60Hz) - IEC, 230V-460V/60Hz UL-cUL (28/09/2018 - ...)

(((MOVOL:200V , MOVOL:400V , MOVOL:500V) + FREQ:50HZ , FREQ:60HZ + MOVOL:460V) + CAPPRE:IEC , (MOVOL:230V , MOVOL:460V) + CAPPRE:ULCUL + FREQ:60HZ) + IDRY:Y + MODEL:GA90VP_16

Ref	Part Number	Qty	Name	Validity	R.
5050	1624 9609 00	1	FAN	**(20/07/2017 - ...)** ((MOVOL:230V , MOVOL:460V) + CAPPRE:ULCUL , CAPPRE:IEC + MOVOL:460V) + FREQ:60HZ	
5060	1088 1001 01	4	WARNING MARK	**(20/07/2017 - ...)**	
5070	1624 1940 00	1	WIRING	**(20/07/2017 - ...)**	
5080	1617 3077 90	1	TEMPERATURE SENSOR	**(20/07/2017 - ...)**	
5100	1089 9139 25	1	PRESSURE SWITCH	**(20/07/2017 - ...)**	
5110	0147 1326 03	4	SCREW	**(20/07/2017 - ...)**	
5120	0300 8019 00	4	PLAIN WASHER	**(20/07/2017 - ...)**	
5130	0333 3227 00	4	WASHER	**(20/07/2017 - ...)**	
5150	0583 8100 71	1	PIPE FITTING	**(20/07/2017 - ...)**	
5350	~~0226 3343 07~~	2	TAPPING SCREW	**(20/07/2017 - ...)**	
	Substituted by:	0226 0047 13 - TAPPING SCREW (quantity: 1)			
5370	0348 0111 06	1	CONNECTOR	**(20/07/2017 - ...)**	

Legend:

CAPPRE:IEC - Component approval electrical:IEC
CAPPRE:ULCUL - Component approval electrical:UL/cUL
FREQ:50HZ - Frequency:50 Hz
FREQ:60HZ - Frequency:60 Hz
IDRY:Y - Integrated dryer:Yes
MODEL:GA90VP_16 - Model:GA 90VSD+
MOVOL:200V - Supply voltage:200 V
MOVOL:230V - Supply voltage:230 V
MOVOL:400V - Supply voltage:400 V
MOVOL:460V - Supply voltage:460 V
MOVOL:500V - Supply voltage:500 V

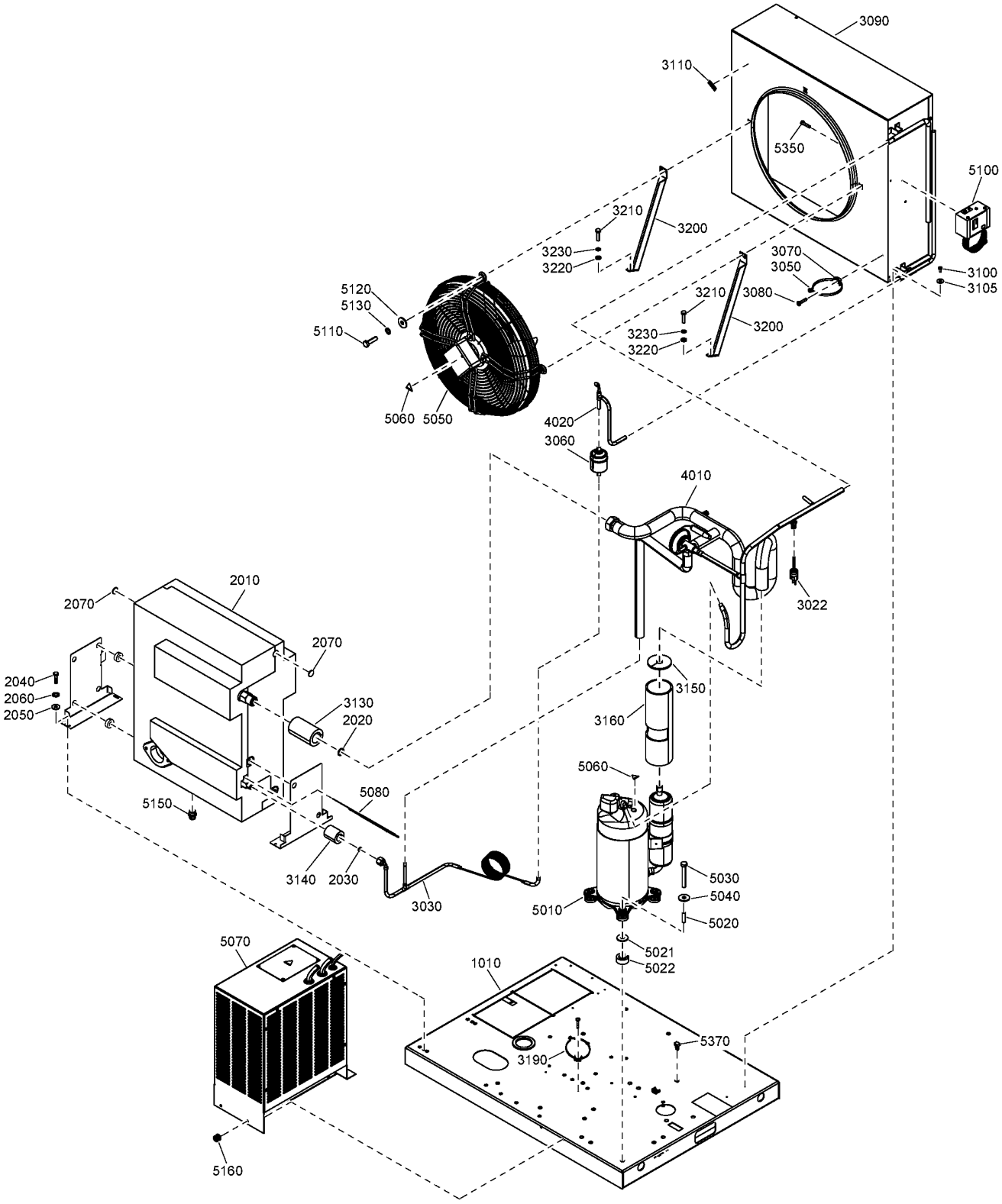
3090
3110
5350
5100
3210
3200
3230
3220
3070
3050
3100
3105
3210
3080
3200
3230
3220
5120
5130
5110
5060
5050
4020
3060
4010
3022
2010
2070
2070
2040
2060
2050
3130
2020
3150
3160
5060
5150
5080
3140
2030
3030
5030
5040
5010
5020
5021
5022
5070
1010
5370
3190
5160

Ref	Part Number	Qty	Name	Validity	R.
	8092 2663 89	1	AIR DRYER	(20/07/2017 - ...)	R410A
1010	1624 9506 80	1	FRAME	(20/07/2017 - ...)	
	• 1622 0000 20	1	DECAL SYMBOLS		
	• 1627 1828 00	1	DECAL WARNING		
2010	1603 6401 02	1	HEAT EXCHANGER	(20/07/2017 - ...)	
2020	~~1617 0315 00~~	1	RING (ALL)	(20/07/2017 - ...)	
	Substituted by:	1617 0165 00 - RING (quantity: 1)			
2030	1617 0092 03	1	RING	(20/07/2017 - ...)	
2040	0147 1247 03	4	HEXAGON BOLT	(20/07/2017 - ...)	
2050	0300 0274 64	4	WASHER	(20/07/2017 - ...)	
2060	0333 3220 00	4	WASHER	(20/07/2017 - ...)	
2070	1624 2451 00	2	INSULATION	(20/07/2017 - ...)	
3022	1089 9139 16	1	HP SWITCH	(20/07/2017 - ...)	
3030	1624 9733 05	1	CAPILLARY	(20/07/2017 - 31/07/2018)	
3050	0348 0101 13	1	CABLE TIE	(20/07/2017 - ...)	
3060	1624 2293 00	1	FILTER DRYER	(20/07/2017 - ...)	
3070	0348 0110 03	1	ANCHOR PLATE	(20/07/2017 - ...)	
3080	~~0226 3343 07~~	1	TAPPING SCREW	(20/07/2017 - ...)	
	Substituted by:	0226 0047 13 - TAPPING SCREW (quantity: 1)			
3090	1627 1547 00	1	CONDENSER	(20/07/2017 - ...)	
3100	0226 3256 00	4	SCREW	(20/07/2017 - ...)	
3105	0300 0274 70	4	WASHER	(20/07/2017 - ...)	
3110	1617 2385 00	1	ROTATION ARROW	(20/07/2017 - ...)	
3130	1624 9718 00	1	INSULATION	(20/07/2017 - ...)	
3140	1617 2361 00	1	INSULATION INLET HE	(20/07/2017 - ...)	
3150	1624 9614 00	1	INSULATION THERMAL	(20/07/2017 - ...)	
3160	1624 9712 00	1	INSULATION THERMAL	(20/07/2017 - ...)	
3190	0348 0101 13	1	CABLE TIE	(20/07/2017 - ...)	
3200	1624 9983 00	2	SUPPORT	(20/07/2017 - ...)	
3210	0147 1249 03	2	HEXAGON BOLT	(20/07/2017 - ...)	
3220	0301 2321 00	2	PLAIN WASHER	(20/07/2017 - ...)	
3230	0333 3120 00	2	WASHER	(20/07/2017 - ...)	
4010	1627 1557 00	1	PIPE	(20/07/2017 - 31/07/2018)	
4020	1624 9517 00	1	PIPE ASSEMBLY	(20/07/2017 - 31/07/2018)	
	• 1624 9352 00	1	VALVE SCHRAEDER		
5010	1617 4638 00	1	COMPRESSOR NN31Y	(20/07/2017 - ...)	
5020	1624 2698 00	4	BUSHING	(20/07/2017 - ...)	
5021	0300 8019 00	4	PLAIN WASHER	(20/07/2017 - ...)	
5022	1627 1696 00	4	BUSHING	(20/07/2017 - ...)	
5030	0147 1106 72	4	SCREW	(20/07/2017 - ...)	
5040	0300 8019 00	4	PLAIN WASHER	(20/07/2017 - ...)	
5050	1624 9608 00	1	FAN	(20/07/2017 - ...)	
5060	1088 1001 01	4	WARNING MARK	(20/07/2017 - ...)	
5070	1624 9978 00	1	TRANSFORMER	(20/07/2017 - ...)	
5080	1617 3077 90	1	TEMPERATURE SENSOR	(20/07/2017 - ...)	
5100	1089 9139 25	1	PRESSURE SWITCH	(20/07/2017 - ...)	
5110	0147 1326 03	4	SCREW	(20/07/2017 - ...)	
5120	0300 8019 00	4	PLAIN WASHER	(20/07/2017 - ...)	
5130	0333 3227 00	4	WASHER	(20/07/2017 - ...)	
5150	0583 8100 71	1	PIPE FITTING	(20/07/2017 - ...)	
5160	0129 3270 38	4	RIVET	(20/07/2017 - ...)	

Legend:

CAPPRE:IEC - Component approval electrical:IEC
FREQ:60HZ - Frequency:60 Hz
IDRY:Y - Integrated dryer:Yes
MODEL:GA90VP_16 - Model:GA 90VSD+
MOVOL:200V - Supply voltage:200 V
MOVOL:380V - Supply voltage:380 V

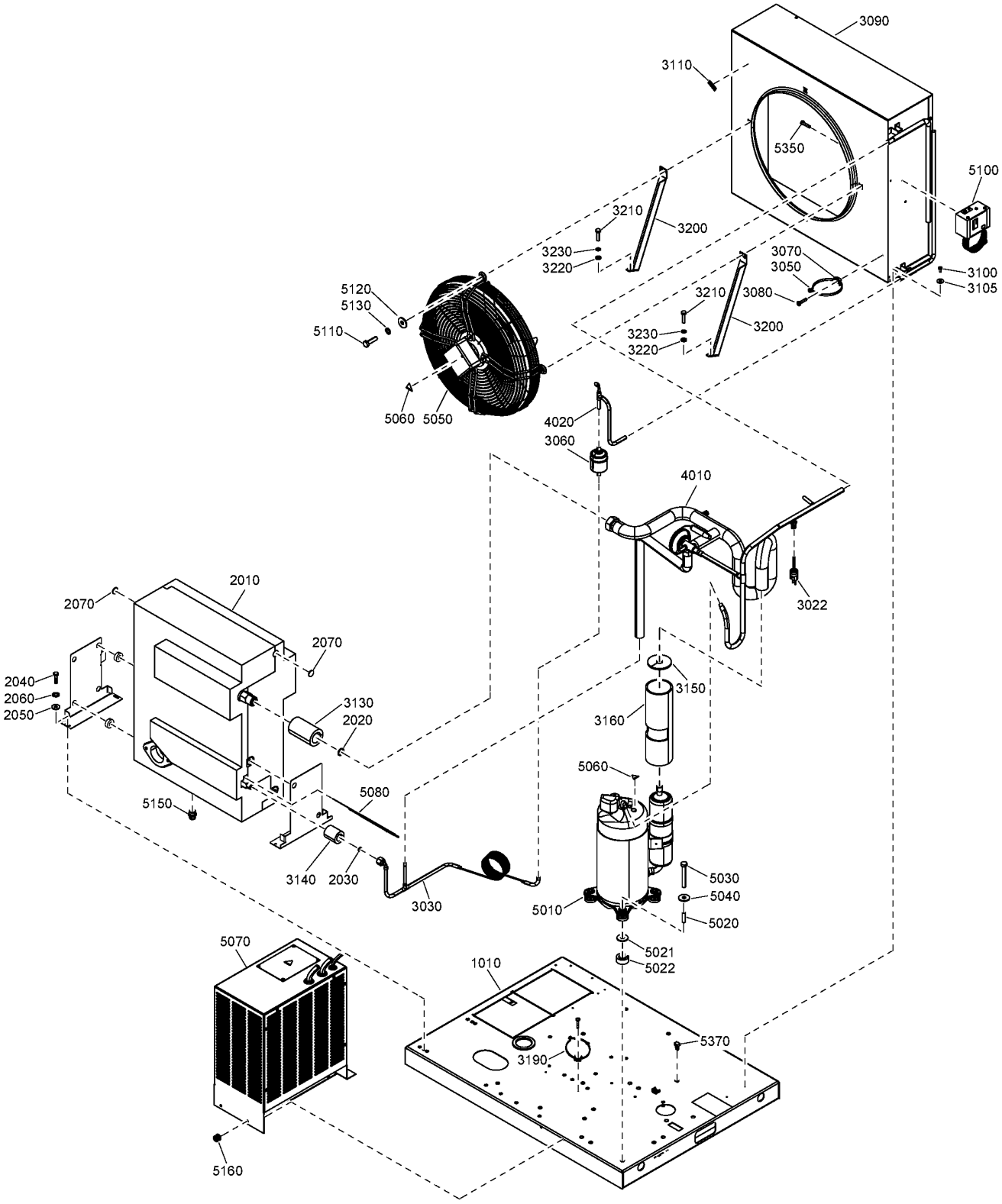
3090
3110
5350
5100
3210
3200
3230
3220
3070
3050
3100
3105
3210
3080
3200
3230
3220
5120
5130
5110
5060
5050
4020
3060
4010
3022
2010
2070
2070
2040
2060
2050
3130
2020
3150
3160
5060
5150
5080
3140
2030
3030
5010
5030
5040
5020
5021
5022
5070
1010
5370
3190
5160

Ref	Part Number	Qty	Name	Validity	R.
5350	~~0226 3343 07~~	2	TAPPING SCREW	(20/07/2017 - ...)	
	Substituted by:	0226 0047 13 - TAPPING SCREW (quantity: 1)			
5370	0348 0111 06	1	CONNECTOR	(20/07/2017 - ...)	

Legend:

CAPPRE:IEC - Component approval electrical:IEC
FREQ:60HZ - Frequency:60 Hz
IDRY:Y - Integrated dryer:Yes
MODEL:GA90VP_16 - Model:GA 90VSD+
MOVOL:200V - Supply voltage:200 V
MOVOL:380V - Supply voltage:380 V

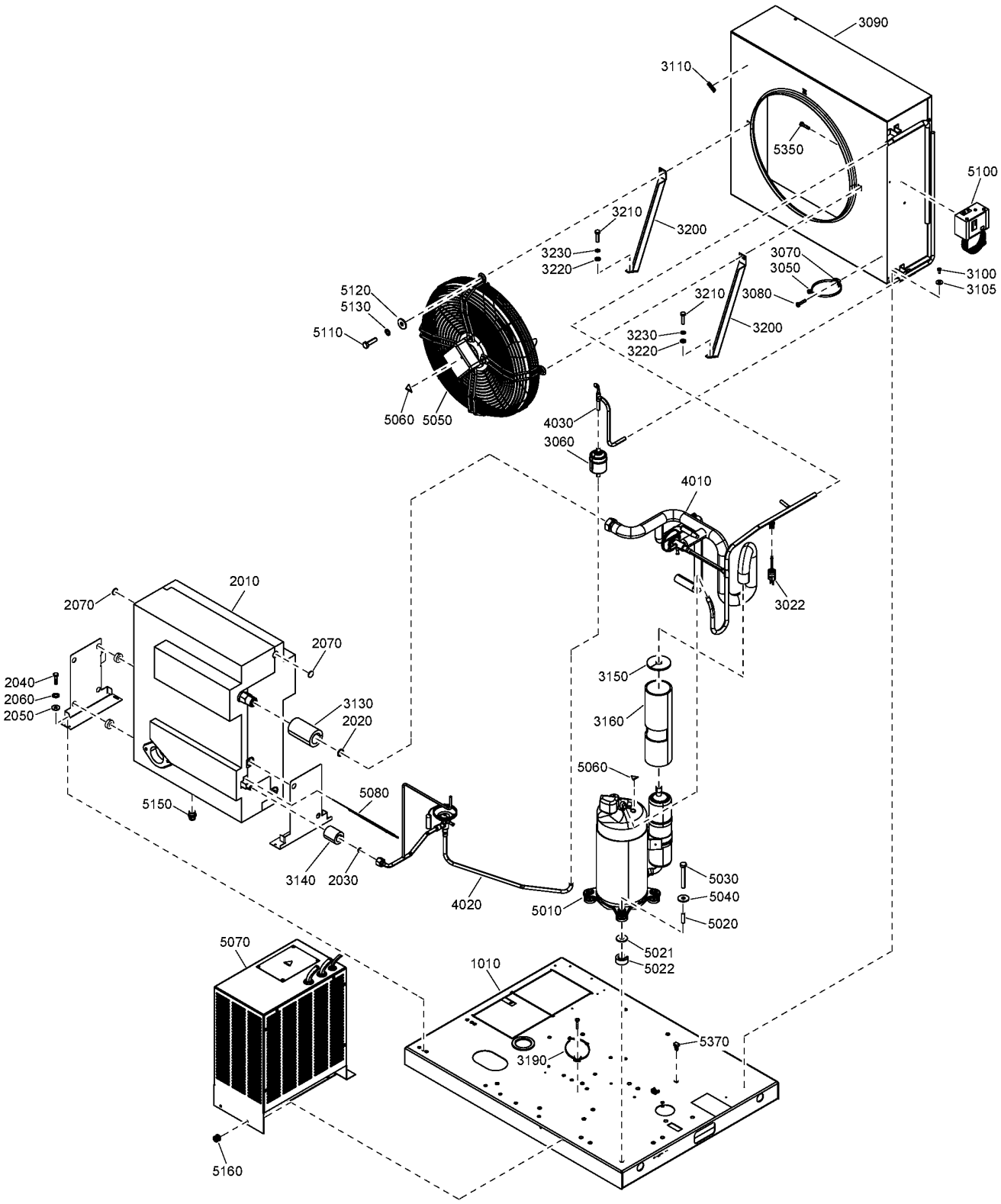
3090
3110
5350
5100
3210
3200
3230
3220
3070
3050
3100
3105
3210
3080
3200
3230
3220
5120
5130
5110
5060
5050
4030
3060
4010
3022
2010
2070
2070
2040
2060
2050
3130
2020
3150
3160
5060
5080
5150
3140
2030
4020
5010
5030
5040
5020
5021
5022
5070
1010
5370
3190
5160

Ref	Part Number	Qty	Name	Validity	R.
	8092 2663 89	1	AIR DRYER	(20/07/2017 - ...)	R410A
1010	1624 9506 80	1	FRAME	(20/07/2017 - ...)	
	• 1622 0000 20	1	DECAL SYMBOLS		
	• 1627 1828 00	1	DECAL WARNING		
2010	1603 6401 02	1	HEAT EXCHANGER	(20/07/2017 - ...)	
2020	~~1617 0315 00~~	1	RING (ALL)	(20/07/2017 - ...)	
	Substituted by:	1617 0165 00 - RING (quantity: 1)			
2030	1617 0092 03	1	RING	(20/07/2017 - ...)	
2040	0147 1247 03	4	HEXAGON BOLT	(20/07/2017 - ...)	
2050	0300 0274 64	4	WASHER	(20/07/2017 - ...)	
2060	0333 3220 00	4	WASHER	(20/07/2017 - ...)	
2070	1624 2451 00	2	INSULATION	(20/07/2017 - ...)	
3022	1089 9139 16	1	HP SWITCH	(20/07/2017 - ...)	
3050	0348 0101 13	1	CABLE TIE	(20/07/2017 - ...)	
3060	1624 2293 00	1	FILTER DRYER	(20/07/2017 - ...)	
3070	0348 0110 03	1	ANCHOR PLATE	(20/07/2017 - ...)	
3080	~~0226 3343 07~~	1	TAPPING SCREW	(20/07/2017 - ...)	
	Substituted by:	0226 0047 13 - TAPPING SCREW (quantity: 1)			
3090	1627 1547 00	1	CONDENSER	(20/07/2017 - ...)	
3100	0226 3256 00	4	SCREW	(20/07/2017 - ...)	
3105	0300 0274 70	4	WASHER	(20/07/2017 - ...)	
3110	1617 2385 00	1	ROTATION ARROW	(20/07/2017 - ...)	
3130	1624 9718 00	1	INSULATION	(20/07/2017 - ...)	
3140	1617 2361 00	1	INSULATION INLET HE	(20/07/2017 - ...)	
3150	1624 9614 00	1	INSULATION THERMAL	(20/07/2017 - ...)	
3160	1624 9712 00	1	INSULATION THERMAL	(20/07/2017 - ...)	
3190	0348 0101 13	1	CABLE TIE	(20/07/2017 - ...)	
3200	1624 9983 00	2	SUPPORT	(20/07/2017 - ...)	
3210	0147 1249 03	2	HEXAGON BOLT	(20/07/2017 - ...)	
3220	0301 2321 00	2	PLAIN WASHER	(20/07/2017 - ...)	
3230	0333 3120 00	2	WASHER	(20/07/2017 - ...)	
4010	2204 2104 00	1	PIPE ASSEMBLY	(31/07/2018 - ...)	
4020	2204 2093 00	1	PIPE	(31/07/2018 - ...)	
4030	1624 9517 00	1	PIPE ASSEMBLY	(31/07/2018 - ...)	
5010	1617 4638 00	1	COMPRESSOR NN31Y	(20/07/2017 - ...)	
5020	1624 2698 00	4	BUSHING	(20/07/2017 - ...)	
5021	0300 8019 00	4	PLAIN WASHER	(20/07/2017 - ...)	
5022	1627 1696 00	4	BUSHING	(20/07/2017 - ...)	
5030	0147 1106 72	4	SCREW	(20/07/2017 - ...)	
5040	0300 8019 00	4	PLAIN WASHER	(20/07/2017 - ...)	
5050	1624 9608 00	1	FAN	(20/07/2017 - ...)	
5060	1088 1001 01	4	WARNING MARK	(20/07/2017 - ...)	
5070	1624 9978 00	1	TRANSFORMER	(20/07/2017 - ...)	
5080	1617 3077 90	1	TEMPERATURE SENSOR	(20/07/2017 - ...)	
5100	1089 9139 25	1	PRESSURE SWITCH	(20/07/2017 - ...)	
5110	0147 1326 03	4	SCREW	(20/07/2017 - ...)	
5120	0300 8019 00	4	PLAIN WASHER	(20/07/2017 - ...)	
5130	0333 3227 00	4	WASHER	(20/07/2017 - ...)	
5150	0583 8100 71	1	PIPE FITTING	(20/07/2017 - ...)	
5160	0129 3270 38	4	RIVET	(20/07/2017 - ...)	
5350	~~0226 3343 07~~	2	TAPPING SCREW	(20/07/2017 - ...)	

Legend:

CAPPRE:IEC - Component approval electrical:IEC
FREQ:60HZ - Frequency:60 Hz
IDRY:Y - Integrated dryer:Yes
MODEL:GA90VP_16 - Model:GA 90VSD+
MOVOL:200V - Supply voltage:200 V
MOVOL:380V - Supply voltage:380 V

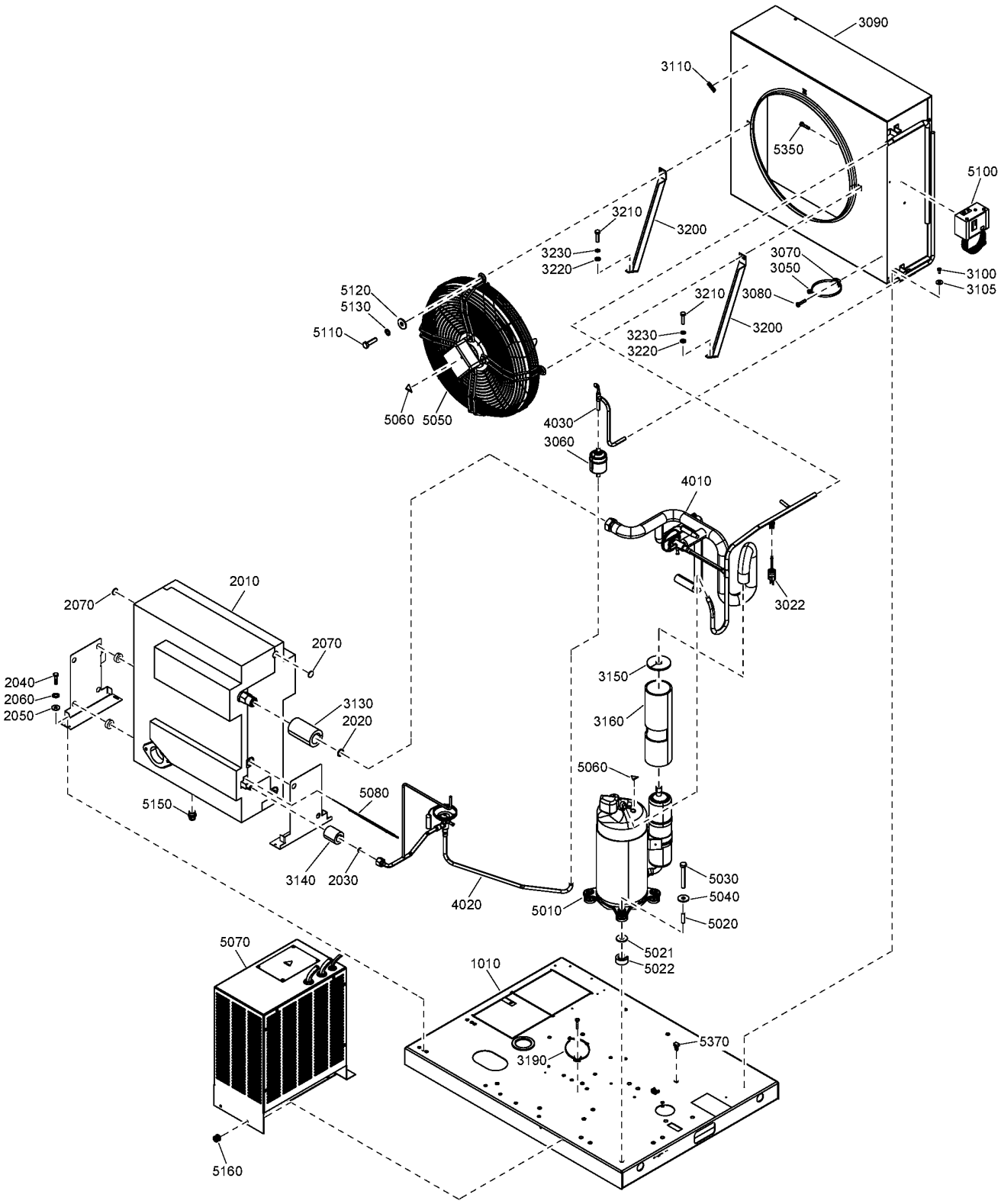
3090
3110
5350
5100
3210
3200
3230
3220
3070
3050
3100
3105
3210
3080
3200
3230
3220
5120
5130
5110
5060
5050
4030
3060
4010
3022
2010
2070
2070
2040
2060
2050
3130
2020
3150
3160
5060
5080
5150
3140
2030
4020
5010
5030
5040
5020
5021
5022
5070
1010
5370
3190
5160

Ref	Part Number	Qty	Name	Validity	R.
	Substituted by:	0226 0047 13 - TAPPING SCREW (quantity: 1)			
5370	0348 0111 06	1	CONNECTOR	**(20/07/2017 - ...)**	

Legend:

CAPPRE:IEC - Component approval electrical:IEC
FREQ:60HZ - Frequency:60 Hz
IDRY:Y - Integrated dryer:Yes
MODEL:GA90VP_16 - Model:GA 90VSD+
MOVOL:200V - Supply voltage:200 V
MOVOL:380V - Supply voltage:380 V

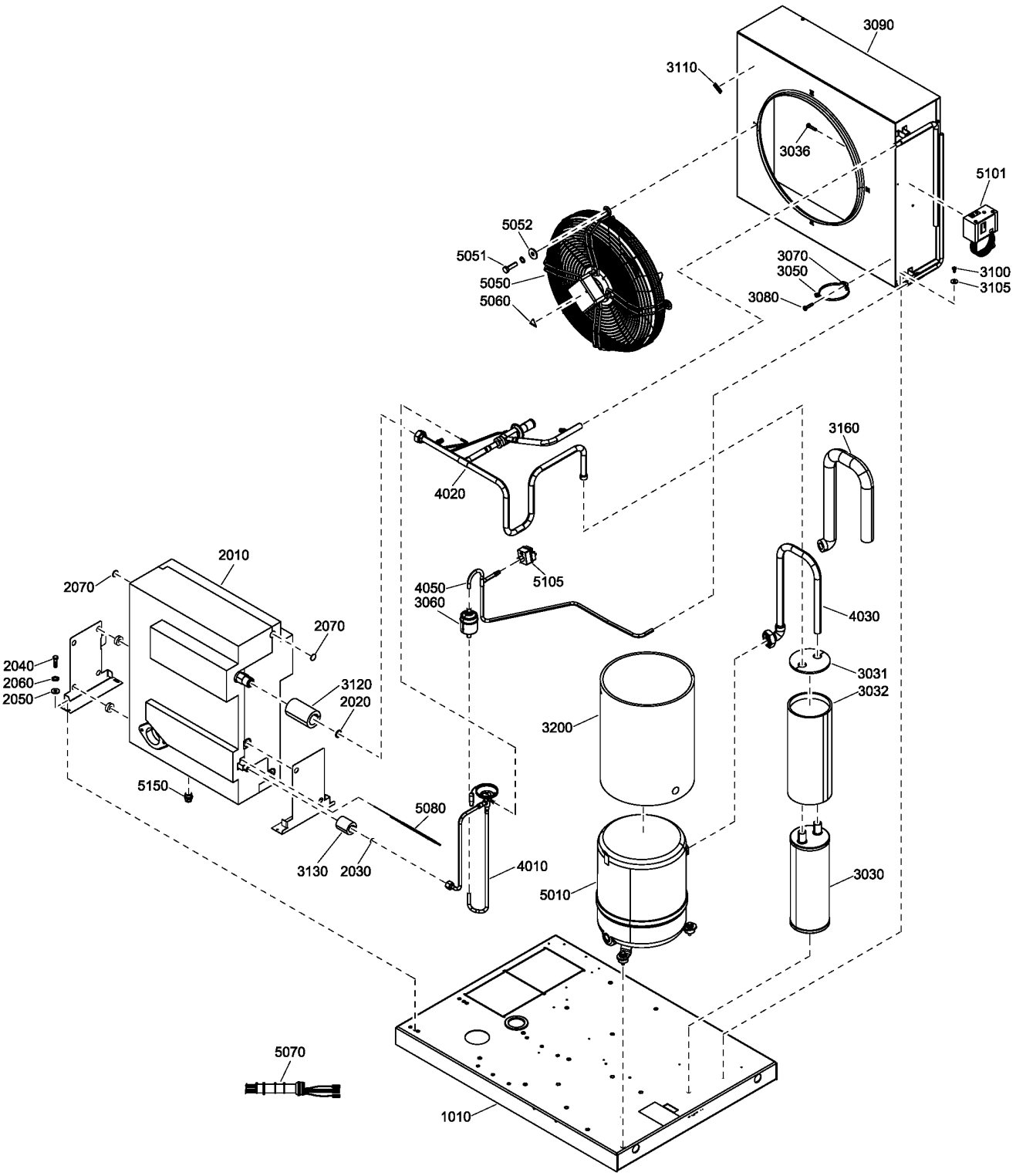
3090
3110
3036
5101
5052
5051
5050
5060
3070
3050
3080
3100
3105
3160
4020
2010
2070
5105
4050
3060
4030
2070
2040
2060
2050
3120
2020
3031
3032
3200
5150
5080
3130
2030
4010
5010
3030
5070
1010

Ref	Part Number	Qty	Name	Validity	R.
	1627 1653 80	1	AIR DRYER	(20/07/2017 - ...)	R134A
1010	1627 1651 80	1	FRAME	(20/07/2017 - ...)	
	• 1622 0000 20	1	DECAL SYMBOLS		
	• 1079 9930 30	1	LABEL		
2010	1603 6401 02	1	HEAT EXCHANGER	(20/07/2017 - ...)	
2020	~~1617 0315 00~~	1	RING (ALL)	(20/07/2017 - ...)	
	Substituted by:	1617 0165 00 - RING (quantity: 1)			
2030	1617 0092 03	1	RING	(20/07/2017 - ...)	
2040	0147 1247 03	4	HEXAGON BOLT	(20/07/2017 - ...)	
2050	0300 0274 64	4	WASHER	(20/07/2017 - ...)	
2060	0333 3220 00	4	WASHER	(20/07/2017 - ...)	
2070	1624 2451 00	2	INSULATION	(20/07/2017 - ...)	
3030	1627 1657 00	1	REFRIGERANT SEPARATOR	(20/07/2017 - ...)	
3031	1627 1659 00	1	INSULATION THERMAL	(20/07/2017 - ...)	
3032	1627 1658 00	1	INSULATION THERMAL	(20/07/2017 - ...)	
3036	~~0226 3343 07~~	3	TAPPING SCREW	(20/07/2017 - ...)	
	Substituted by:	0226 0047 13 - TAPPING SCREW (quantity: 1)			
3050	0348 0101 13	1	CABLE TIE	(20/07/2017 - ...)	
3060	1624 2293 00	1	FILTER DRYER	(20/07/2017 - ...)	
3070	0348 0110 03	1	ANCHOR PLATE	(20/07/2017 - ...)	
3080	~~0226 3343 07~~	1	TAPPING SCREW	(20/07/2017 - ...)	
	Substituted by:	0226 0047 13 - TAPPING SCREW (quantity: 1)			
3090	1627 1547 00	1	CONDENSER	(20/07/2017 - ...)	
3100	0226 3256 00	4	SCREW	(20/07/2017 - ...)	
3105	0300 0274 70	4	WASHER	(20/07/2017 - ...)	
3110	1617 2385 00	1	ROTATION ARROW	(20/07/2017 - ...)	
3120	1624 2386 00	1	INSULATION OUTLET HE	(20/07/2017 - ...)	
3130	1617 2361 00	2	INSULATION INLET HE	(20/07/2017 - ...)	
3160	1627 1837 00	1	INSULATION THERMAL	(20/07/2017 - ...)	
3200	2202 9604 00	1	INSULATION	(20/07/2017 - ...)	
4010	1627 1655 00	1	PIPE ASSY	(20/07/2017 - ...)	
4020	1627 1656 00	1	PIPE	(20/07/2017 - ...)	
	• 2202 8185 01	1	BYPASS VALVE		
4030	1627 1660 00	1	PIPE	(20/07/2017 - ...)	
4050	1627 1664 00	1	PIPE ASSY	(20/07/2017 - ...)	
5010	1614 7168 12	1	COMPRESSOR	(20/07/2017 - ...)	
5050	1624 9609 00	1	FAN	(20/07/2017 - ...)	
5051	0147 1326 03	4	SCREW	(20/07/2017 - ...)	
5052	0300 8019 00	4	PLAIN WASHER	(20/07/2017 - ...)	
5060	1088 1001 01	4	WARNING MARK	(20/07/2017 - ...)	
5070	1627 1708 00	1	WIRING	(20/07/2017 - ...)	
5080	1617 3077 90	1	TEMPERATURE SENSOR	(20/07/2017 - ...)	
5101	1089 9139 35	1	PRESSURE SWITCH	(20/07/2017 - ...)	
5105	1627 1852 00	1	HIGH PRESSURE SWITCH	(20/07/2017 - ...)	
5150	0583 8100 71	1	PIPE FITTING	(20/07/2017 - ...)	

Legend:

CAPPRE:ULCUL - Component approval electrical:UL/cUL
FREQ:60HZ - Frequency:60 Hz
IDRY:Y - Integrated dryer:Yes
MODEL:GA90VP_16 - Model:GA 90VSD+
MOVOL:575V - Supply voltage:575 V

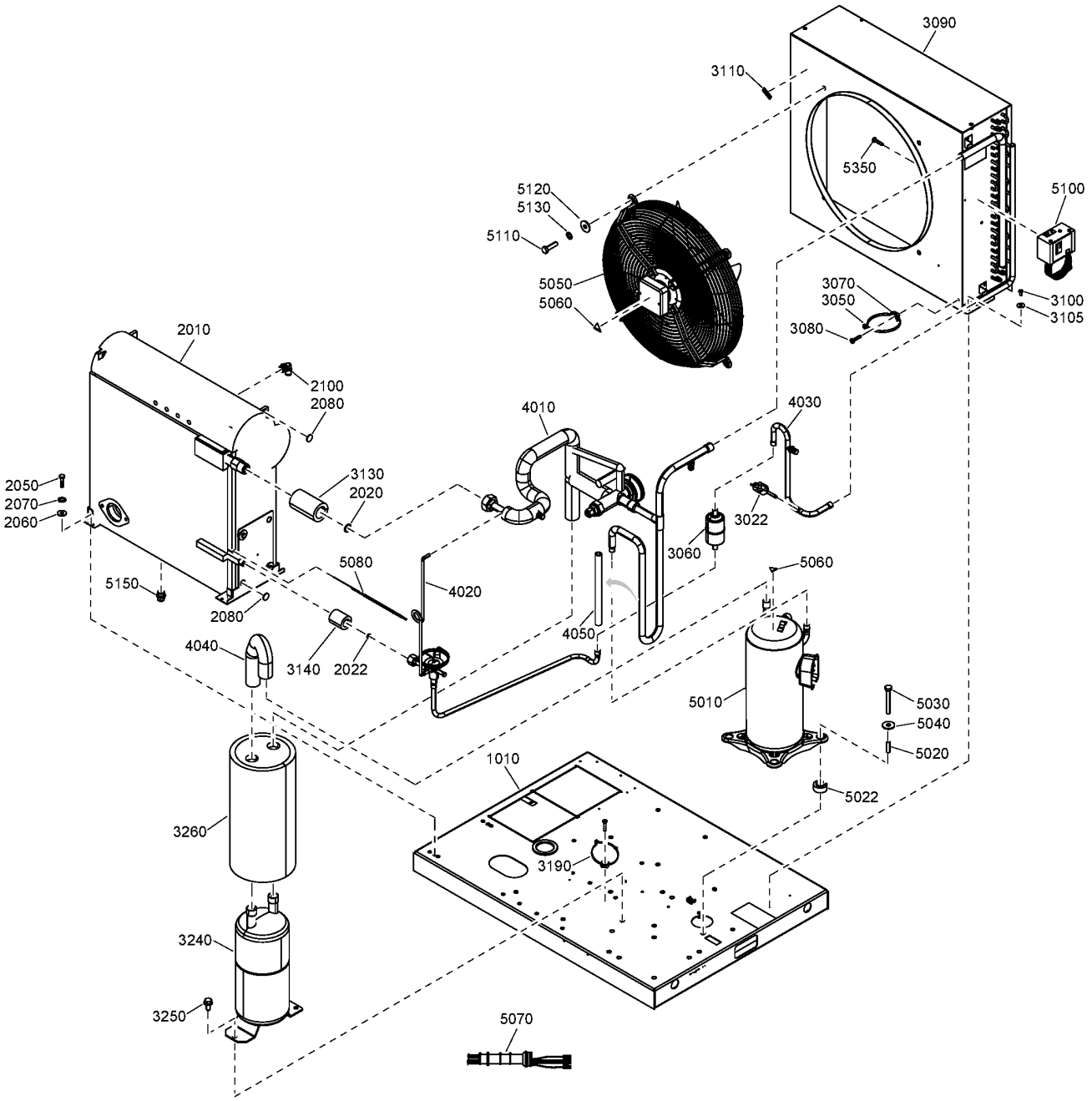
3090
3110
5350
5100
5120
5130
5110
5050
5060
3070
3050
3080
3100
3105
2010
2100
2080
4010
4030
2050
2070
2060
3130
2020
3022
3060
5060
5080
4020
5150
2080
4050
4040
3140
2022
5010
5030
5040
5020
1010
5022
3260
3190
3240
3250
5070

20.11 - Components - GA 110 VSD+ - ID 340 (200V-400V-500V/50Hz, 460V/60Hz) - IEC, 230V-460V/60Hz UL-cUL

(((MOVOL:200V , MOVOL:400V , MOVOL:500V) + FREQ:50HZ , FREQ:60HZ + MOVOL:460V) + CAPPRE:IEC , (MOVOL:230V , MOVOL:460V) + CAPPRE:ULCUL + FREQ:60HZ) + IDRY:Y + MODEL:GA110VP_16

Ref	Part Number	Qty	Name	Validity	R.
	2200 9029 65	1	AIR DRYER	**(09/03/2017 - ...)** (MOVOL:200V , MOVOL:400V , MOVOL:500V) + CAPPRE:IEC + FREQ:50HZ	R410A
	2200 9029 61	1	AIR DRYER	**(20/07/2017 - ...)** ((MOVOL:230V , MOVOL:460V) + CAPPRE:ULCUL , CAPPRE:IEC + MOVOL:460V) + FREQ:60HZ	R410A
1010	1624 9506 80	1	FRAME ASSEMBLY	**(09/03/2017 - 12/07/2017)** CAPPRE:IEC + FREQ:50HZ + MOVOL:400V **(13/07/2017 - 19/07/2017)** (MOVOL:200V , MOVOL:400V , MOVOL:500V) + CAPPRE:IEC + FREQ:50HZ **(20/07/2017 - 30/12/2027)** **(31/12/2027 - ...)** (((MOVOL:400V , MOVOL:500V) + FREQ:50HZ , FREQ:60HZ + MOVOL:460V) + CAPPRE:IEC , CAPPRE:ULCUL + FREQ:60HZ + MOVOL:460V)	
	• 1622 0000 20	1	DECAL SYMBOLS		
	• 1627 1828 00	1	DECAL WARNING		
2010	2204 1604 80	1	HEAT EXCHANGER	**(09/03/2017 - 12/07/2017)** CAPPRE:IEC + FREQ:50HZ + MOVOL:400V **(13/07/2017 - 19/07/2017)** (MOVOL:200V , MOVOL:400V , MOVOL:500V) + CAPPRE:IEC + FREQ:50HZ **(20/07/2017 - 30/12/2027)** **(31/12/2027 - ...)** (((MOVOL:400V , MOVOL:500V) + FREQ:50HZ , FREQ:60HZ + MOVOL:460V) + CAPPRE:IEC , CAPPRE:ULCUL + FREQ:60HZ + MOVOL:460V)	
2020	~~1617 0315 00~~	1	RING (ALL)	**(09/03/2017 - 12/07/2017)** CAPPRE:IEC + FREQ:50HZ + MOVOL:400V **(13/07/2017 - 19/07/2017)** (MOVOL:200V , MOVOL:400V , MOVOL:500V) + CAPPRE:IEC + FREQ:50HZ **(20/07/2017 - 30/12/2027)** **(31/12/2027 - ...)** (((MOVOL:400V , MOVOL:500V) + FREQ:50HZ , FREQ:60HZ + MOVOL:460V) + CAPPRE:IEC , CAPPRE:ULCUL + FREQ:60HZ + MOVOL:460V)	
	Substituted by:	1617 0165 00 - RING (quantity: 1)			
2022	1617 0092 03	1	RING	**(09/03/2017 - 12/07/2017)** CAPPRE:IEC + FREQ:50HZ + MOVOL:400V **(13/07/2017 - 19/07/2017)** (MOVOL:200V , MOVOL:400V , MOVOL:500V) + CAPPRE:IEC + FREQ:50HZ **(20/07/2017 - 30/12/2027)** **(31/12/2027 - ...)** (((MOVOL:400V , MOVOL:500V) + FREQ:50HZ , FREQ:60HZ + MOVOL:460V) + CAPPRE:IEC , CAPPRE:ULCUL + FREQ:60HZ + MOVOL:460V)	
2050	0147 1247 03	4	HEXAGON BOLT	**(09/03/2017 - 12/07/2017)** CAPPRE:IEC + FREQ:50HZ + MOVOL:400V **(13/07/2017 - 19/07/2017)** (MOVOL:200V , MOVOL:400V , MOVOL:500V) + CAPPRE:IEC + FREQ:50HZ **(20/07/2017 - 30/12/2027)** **(31/12/2027 - ...)** (((MOVOL:400V , MOVOL:500V) + FREQ:50HZ , FREQ:60HZ + MOVOL:460V) + CAPPRE:IEC , CAPPRE:ULCUL + FREQ:60HZ + MOVOL:460V)	
2060	0300 0274 64	4	WASHER	**(09/03/2017 - 12/07/2017)** CAPPRE:IEC + FREQ:50HZ + MOVOL:400V **(13/07/2017 - 19/07/2017)** (MOVOL:200V , MOVOL:400V , MOVOL:500V) + CAPPRE:IEC + FREQ:50HZ **(20/07/2017 - 30/12/2027)** **(31/12/2027 - ...)** (((MOVOL:400V , MOVOL:500V) + FREQ:50HZ , FREQ:60HZ + MOVOL:460V) + CAPPRE:IEC , CAPPRE:ULCUL + FREQ:60HZ + MOVOL:460V)	
2070	0333 3220 00	4	WASHER	**(09/03/2017 - 12/07/2017)** CAPPRE:IEC + FREQ:50HZ + MOVOL:400V **(13/07/2017 - 19/07/2017)** (MOVOL:200V , MOVOL:400V , MOVOL:500V) + CAPPRE:IEC + FREQ:50HZ **(20/07/2017 - 30/12/2027)** **(31/12/2027 - ...)** (((MOVOL:400V , MOVOL:500V) + FREQ:50HZ , FREQ:60HZ + MOVOL:460V) + CAPPRE:IEC , CAPPRE:ULCUL + FREQ:60HZ + MOVOL:460V)	
2080	1624 2451 00	2	INSULATION	**(09/03/2017 - 12/07/2017)** CAPPRE:IEC + FREQ:50HZ + MOVOL:400V **(13/07/2017 - 19/07/2017)** (MOVOL:200V , MOVOL:400V , MOVOL:500V) + CAPPRE:IEC + FREQ:50HZ **(20/07/2017 - 08/03/2018)**	

Legend:

CAPPRE:IEC - Component approval electrical:IEC
CAPPRE:ULCUL - Component approval electrical:UL/cUL
FREQ:50HZ - Frequency:50 Hz
FREQ:60HZ - Frequency:60 Hz
IDRY:Y - Integrated dryer:Yes
MODEL:GA110VP_16 - Model:GA 110VSD+
MOVOL:200V - Supply voltage:200 V
MOVOL:230V - Supply voltage:230 V
MOVOL:400V - Supply voltage:400 V
MOVOL:460V - Supply voltage:460 V
MOVOL:500V - Supply voltage:500 V

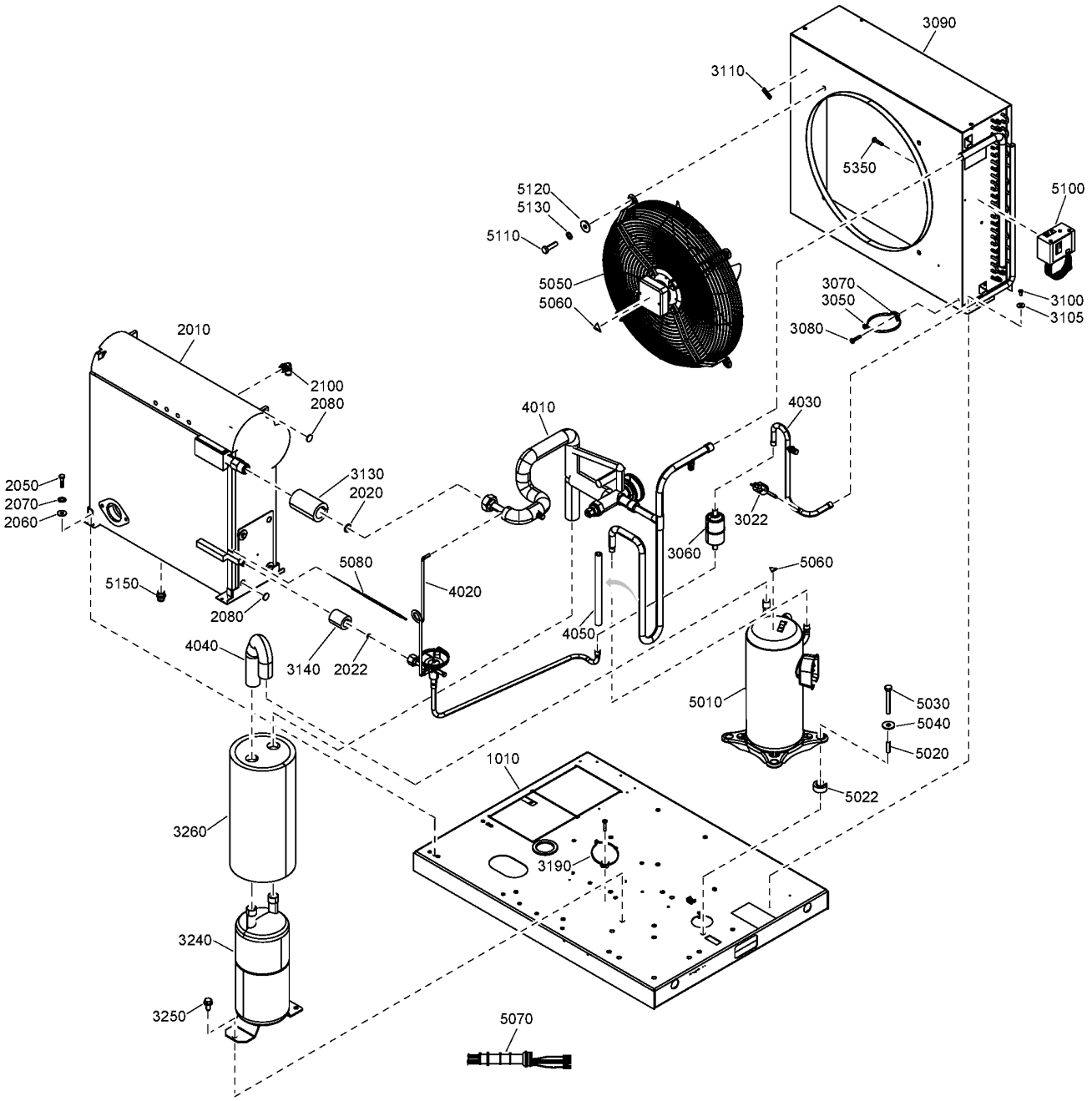
3090
3110
5350
5120
5130
5110
5100
5050
5060
3070
3050
3080
3100
3105
2010
2100
2080
4010
4030
2050
2070
2060
3130
2020
3022
3060
5060
5080
4020
5150
2080
4050
4040
3140
2022
5010
5030
5040
5020
1010
5022
3260
3190
3240
3250
5070

20.11 - Components - GA 110 VSD+ - ID 340 (200V-400V-500V/50Hz, 460V/60Hz) - IEC, 230V-460V/60Hz UL-cUL

(((MOVOL:200V , MOVOL:400V , MOVOL:500V) + FREQ:50HZ , FREQ:60HZ + MOVOL:460V) + CAPPRE:IEC , (MOVOL:230V , MOVOL:460V) + CAPPRE:ULCUL + FREQ:60HZ) + IDRY:Y + MODEL:GA110VP_16

Ref	Part Number	Qty	Name	Validity	R.
2100	0583 8120 81	1	PIPE FITTING	**(24/05/2017 - 12/07/2017)** CAPPRE:IEC + FREQ:50HZ + MOVOL:400V **(13/07/2017 - 19/07/2017)** (MOVOL:200V , MOVOL:400V , MOVOL:500V) + CAPPRE:IEC + FREQ:50HZ **(20/07/2017 - 30/12/2027)** **(31/12/2027 - ...)** (((MOVOL:400V , MOVOL:500V) + FREQ:50HZ , FREQ:60HZ + MOVOL:460V) + CAPPRE:IEC , CAPPRE:ULCUL + FREQ:60HZ + MOVOL:460V)	
3022	1089 9139 16	1	HP SWITCH	**(09/03/2017 - 12/07/2017)** CAPPRE:IEC + FREQ:50HZ + MOVOL:400V **(13/07/2017 - 19/07/2017)** (MOVOL:200V , MOVOL:400V , MOVOL:500V) + CAPPRE:IEC + FREQ:50HZ **(20/07/2017 - 30/12/2027)** **(31/12/2027 - ...)** (((MOVOL:400V , MOVOL:500V) + FREQ:50HZ , FREQ:60HZ + MOVOL:460V) + CAPPRE:IEC , CAPPRE:ULCUL + FREQ:60HZ + MOVOL:460V)	
3050	0348 0101 13	1	CABLE TIE	**(09/03/2017 - 12/07/2017)** CAPPRE:IEC + FREQ:50HZ + MOVOL:400V **(13/07/2017 - 19/07/2017)** (MOVOL:200V , MOVOL:400V , MOVOL:500V) + CAPPRE:IEC + FREQ:50HZ **(20/07/2017 - 30/12/2027)** **(31/12/2027 - ...)** (((MOVOL:400V , MOVOL:500V) + FREQ:50HZ , FREQ:60HZ + MOVOL:460V) + CAPPRE:IEC , CAPPRE:ULCUL + FREQ:60HZ + MOVOL:460V)	
3060	1617 4617 00	1	FILTER	**(09/03/2017 - 12/07/2017)** CAPPRE:IEC + FREQ:50HZ + MOVOL:400V **(13/07/2017 - 19/07/2017)** (MOVOL:200V , MOVOL:400V , MOVOL:500V) + CAPPRE:IEC + FREQ:50HZ **(20/07/2017 - 30/12/2027)** **(31/12/2027 - ...)** (((MOVOL:400V , MOVOL:500V) + FREQ:50HZ , FREQ:60HZ + MOVOL:460V) + CAPPRE:IEC , CAPPRE:ULCUL + FREQ:60HZ + MOVOL:460V)	
3070	0348 0110 03	1	ANCHOR PLATE	**(09/03/2017 - 12/07/2017)** CAPPRE:IEC + FREQ:50HZ + MOVOL:400V **(13/07/2017 - 19/07/2017)** (MOVOL:200V , MOVOL:400V , MOVOL:500V) + CAPPRE:IEC + FREQ:50HZ **(20/07/2017 - 30/12/2027)** **(31/12/2027 - ...)** (((MOVOL:400V , MOVOL:500V) + FREQ:50HZ , FREQ:60HZ + MOVOL:460V) + CAPPRE:IEC , CAPPRE:ULCUL + FREQ:60HZ + MOVOL:460V)	
3080	~~0226 3343 07~~	1	TAPPING SCREW	**(09/03/2017 - 12/07/2017)** CAPPRE:IEC + FREQ:50HZ + MOVOL:400V **(13/07/2017 - 19/07/2017)** (MOVOL:200V , MOVOL:400V , MOVOL:500V) + CAPPRE:IEC + FREQ:50HZ **(20/07/2017 - 30/12/2027)** **(31/12/2027 - ...)** (((MOVOL:400V , MOVOL:500V) + FREQ:50HZ , FREQ:60HZ + MOVOL:460V) + CAPPRE:IEC , CAPPRE:ULCUL + FREQ:60HZ + MOVOL:460V)	
	Substituted by:	0226 0047 13 - TAPPING SCREW (quantity: 1)			
3090	2204 1606 00	1	CONDENSER	**(09/03/2017 - 12/07/2017)** CAPPRE:IEC + FREQ:50HZ + MOVOL:400V **(13/07/2017 - 19/07/2017)** (MOVOL:200V , MOVOL:400V , MOVOL:500V) + CAPPRE:IEC + FREQ:50HZ **(20/07/2017 - 30/12/2027)** **(31/12/2027 - ...)** (((MOVOL:400V , MOVOL:500V) + FREQ:50HZ , FREQ:60HZ + MOVOL:460V) + CAPPRE:IEC , CAPPRE:ULCUL + FREQ:60HZ + MOVOL:460V)	
3100	0226 3256 00	4	SCREW	**(09/03/2017 - 12/07/2017)** CAPPRE:IEC + FREQ:50HZ + MOVOL:400V **(13/07/2017 - 19/07/2017)** (MOVOL:200V , MOVOL:400V , MOVOL:500V) + CAPPRE:IEC + FREQ:50HZ **(20/07/2017 - 30/12/2027)** **(31/12/2027 - ...)** (((MOVOL:400V , MOVOL:500V) + FREQ:50HZ , FREQ:60HZ + MOVOL:460V) + CAPPRE:IEC , CAPPRE:ULCUL + FREQ:60HZ + MOVOL:460V)	
3105	0300 0274 70	4	WASHER	**(09/03/2017 - 12/07/2017)** CAPPRE:IEC + FREQ:50HZ + MOVOL:400V **(13/07/2017 - 19/07/2017)** (MOVOL:200V , MOVOL:400V , MOVOL:500V) + CAPPRE:IEC + FREQ:50HZ **(20/07/2017 - 30/12/2027)** **(31/12/2027 - ...)** (((MOVOL:400V , MOVOL:500V) + FREQ:50HZ , FREQ:60HZ + MOVOL:460V) + CAPPRE:IEC , CAPPRE:ULCUL + FREQ:60HZ + MOVOL:460V)	

Legend:

CAPPRE:IEC - Component approval electrical:IEC
FREQ:60HZ - Frequency:60 Hz
MOVOL:200V - Supply voltage:200 V
MOVOL:460V - Supply voltage:460 V
CAPPRE:ULCUL - Component approval electrical:UL/cUL
IDRY:Y - Integrated dryer:Yes
MOVOL:230V - Supply voltage:230 V
MOVOL:500V - Supply voltage:500 V
FREQ:50HZ - Frequency:50 Hz
MODEL:GA110VP_16 - Model:GA 110VSD+
MOVOL:400V - Supply voltage:400 V

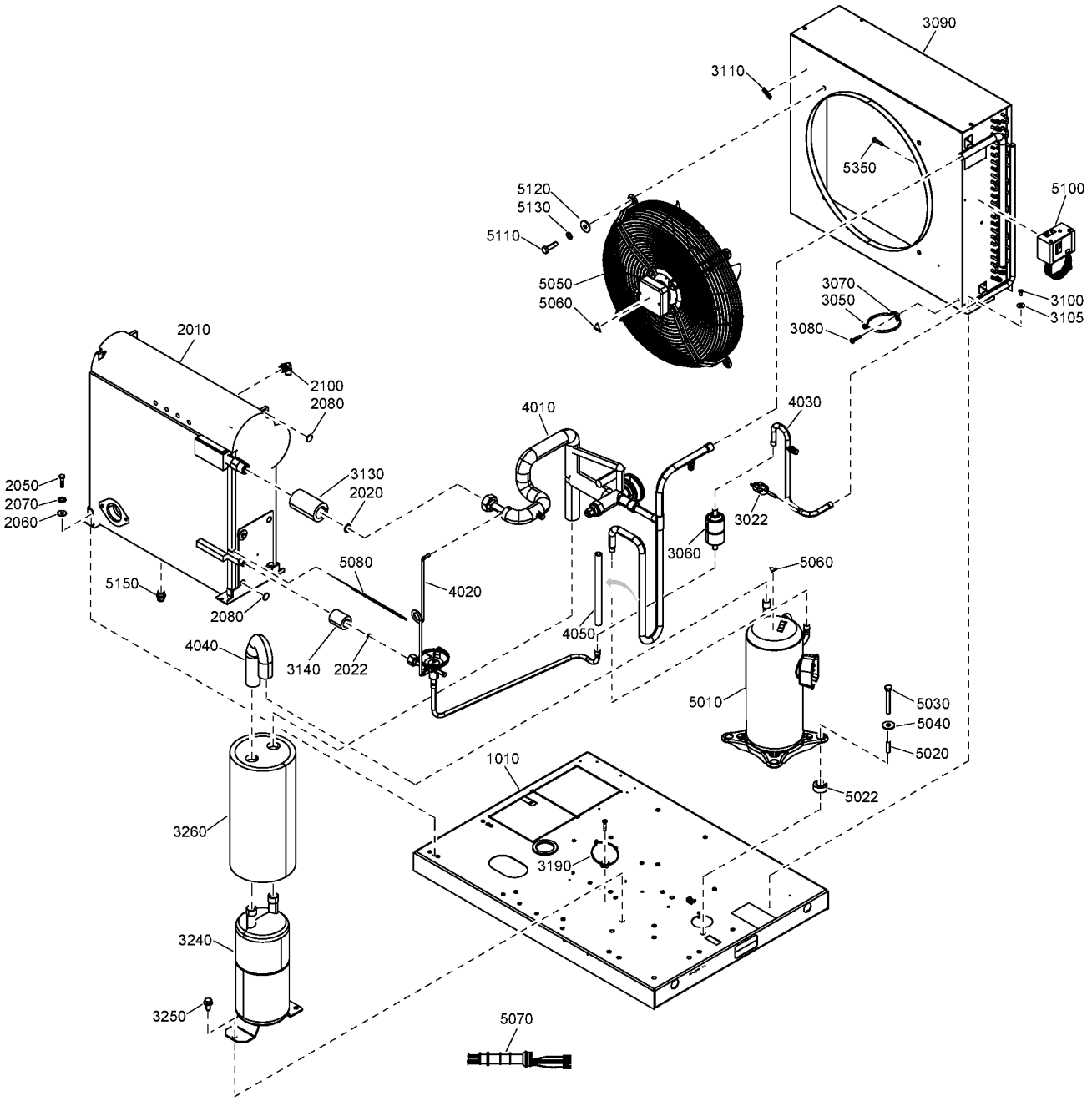
3090
3110
5350
5120
5130
5110
5100
5050
5060
3070
3050
3080
3100
3105
2010
2100
2080
4010
4030
2050
2070
2060
3130
2020
3022
3060
5060
5080
4020
5150
2080
4050
4040
3140
2022
5010
5030
5040
5020
1010
5022
3260
3190
3240
3250
5070

Ref	Part Number	Qty	Name	Validity	R.
3110	1617 2385 00	1	ROTATION ARROW	**(09/03/2017 - 12/07/2017)** CAPPRE:IEC + FREQ:50HZ + MOVOL:400V **(13/07/2017 - 19/07/2017)** (MOVOL:200V , MOVOL:400V , MOVOL:500V) + CAPPRE:IEC + FREQ:50HZ **(20/07/2017 - 30/12/2027)** **(31/12/2027 - ...)** (((MOVOL:400V , MOVOL:500V) + FREQ:50HZ , FREQ:60HZ + MOVOL:460V) + CAPPRE:IEC , CAPPRE:ULCUL + FREQ:60HZ + MOVOL:460V)	
3130	1624 9718 00	1	INSULATION	**(09/03/2017 - 12/07/2017)** CAPPRE:IEC + FREQ:50HZ + MOVOL:400V **(13/07/2017 - 19/07/2017)** (MOVOL:200V , MOVOL:400V , MOVOL:500V) + CAPPRE:IEC + FREQ:50HZ **(20/07/2017 - 08/03/2018)**	
3140	1617 2361 00	1	INLET INSULATION	**(09/03/2017 - 12/07/2017)** CAPPRE:IEC + FREQ:50HZ + MOVOL:400V **(13/07/2017 - 19/07/2017)** (MOVOL:200V , MOVOL:400V , MOVOL:500V) + CAPPRE:IEC + FREQ:50HZ **(20/07/2017 - 08/03/2018)**	
3140	1624 2386 00	1	OUTLET INSULATION	**(09/03/2018 - 30/12/2027)** **(31/12/2027 - ...)** (((MOVOL:400V , MOVOL:500V) + FREQ:50HZ , FREQ:60HZ + MOVOL:460V) + CAPPRE:IEC , CAPPRE:ULCUL + FREQ:60HZ + MOVOL:460V)	
3190	0348 0101 13	1	CABLE TIE	**(09/03/2017 - 12/07/2017)** CAPPRE:IEC + FREQ:50HZ + MOVOL:400V **(13/07/2017 - 19/07/2017)** (MOVOL:200V , MOVOL:400V , MOVOL:500V) + CAPPRE:IEC + FREQ:50HZ **(20/07/2017 - 30/12/2027)** **(31/12/2027 - ...)** (((MOVOL:400V , MOVOL:500V) + FREQ:50HZ , FREQ:60HZ + MOVOL:460V) + CAPPRE:IEC , CAPPRE:ULCUL + FREQ:60HZ + MOVOL:460V)	
3240	1617 3887 00	1	LIQUID SEPARATOR	**(09/03/2017 - 12/07/2017)** CAPPRE:IEC + FREQ:50HZ + MOVOL:400V **(13/07/2017 - 30/12/2027)** (MOVOL:200V , MOVOL:400V , MOVOL:500V) + CAPPRE:IEC + FREQ:50HZ **(31/12/2027 - ...)** (MOVOL:400V , MOVOL:500V) + CAPPRE:IEC + FREQ:50HZ	
3240	1617 2361 00	1	INSULATION INLET HE	**(20/07/2017 - 30/12/2027)** ((MOVOL:230V , MOVOL:460V) + CAPPRE:ULCUL , CAPPRE:IEC + MOVOL:460V) + FREQ:60HZ **(31/12/2027 - ...)** FREQ:60HZ + MOVOL:460V	
3250	1624 2386 00	1	INSULATION OUTLET HE	**(20/07/2017 - 30/12/2027)** ((MOVOL:230V , MOVOL:460V) + CAPPRE:ULCUL , CAPPRE:IEC + MOVOL:460V) + FREQ:60HZ **(31/12/2027 - ...)** FREQ:60HZ + MOVOL:460V	
3250	1619 2766 00	3	SCREW	**(09/03/2017 - 12/07/2017)** CAPPRE:IEC + FREQ:50HZ + MOVOL:400V **(13/07/2017 - 30/12/2027)** (MOVOL:200V , MOVOL:400V , MOVOL:500V) + CAPPRE:IEC + FREQ:50HZ **(31/12/2027 - ...)** (MOVOL:400V , MOVOL:500V) + CAPPRE:IEC + FREQ:50HZ	
3260	1617 2584 80	1	INSULATION	**(09/03/2017 - 12/07/2017)** CAPPRE:IEC + FREQ:50HZ + MOVOL:400V **(13/07/2017 - 30/12/2027)** (MOVOL:200V , MOVOL:400V , MOVOL:500V) + CAPPRE:IEC + FREQ:50HZ **(31/12/2027 - ...)** (MOVOL:400V , MOVOL:500V) + CAPPRE:IEC + FREQ:50HZ	
4010	2204 1608 50	1	PIPE	**(20/07/2017 - 30/12/2027)** ((MOVOL:230V , MOVOL:460V) + CAPPRE:ULCUL , CAPPRE:IEC + MOVOL:460V) + FREQ:60HZ **(31/12/2027 - ...)** FREQ:60HZ + MOVOL:460V	
	• 1624 9352 00	2	VALVE SCHRAEDER	**(18/01/2019 - ...)**	
4010	2204 1608 01	1	PIPE	**(09/03/2017 - 12/07/2017)** CAPPRE:IEC + FREQ:50HZ + MOVOL:400V **(13/07/2017 - 30/12/2027)** (MOVOL:200V , MOVOL:400V , MOVOL:500V) + CAPPRE:IEC + FREQ:50HZ **(31/12/2027 - ...)** (MOVOL:400V , MOVOL:500V) + CAPPRE:IEC + FREQ:50HZ	
	• 1624 9352 00	2	VALVE SCHRAEDER	**(18/01/2019 - ...)**	

Legend:

CAPPRE:IEC - Component approval electrical:IEC
CAPPRE:ULCUL - Component approval electrical:UL/cUL
FREQ:50HZ - Frequency:50 Hz
FREQ:60HZ - Frequency:60 Hz
IDRY:Y - Integrated dryer:Yes
MODEL:GA110VP_16 - Model:GA 110VSD+
MOVOL:200V - Supply voltage:200 V
MOVOL:230V - Supply voltage:230 V
MOVOL:400V - Supply voltage:400 V
MOVOL:460V - Supply voltage:460 V
MOVOL:500V - Supply voltage:500 V

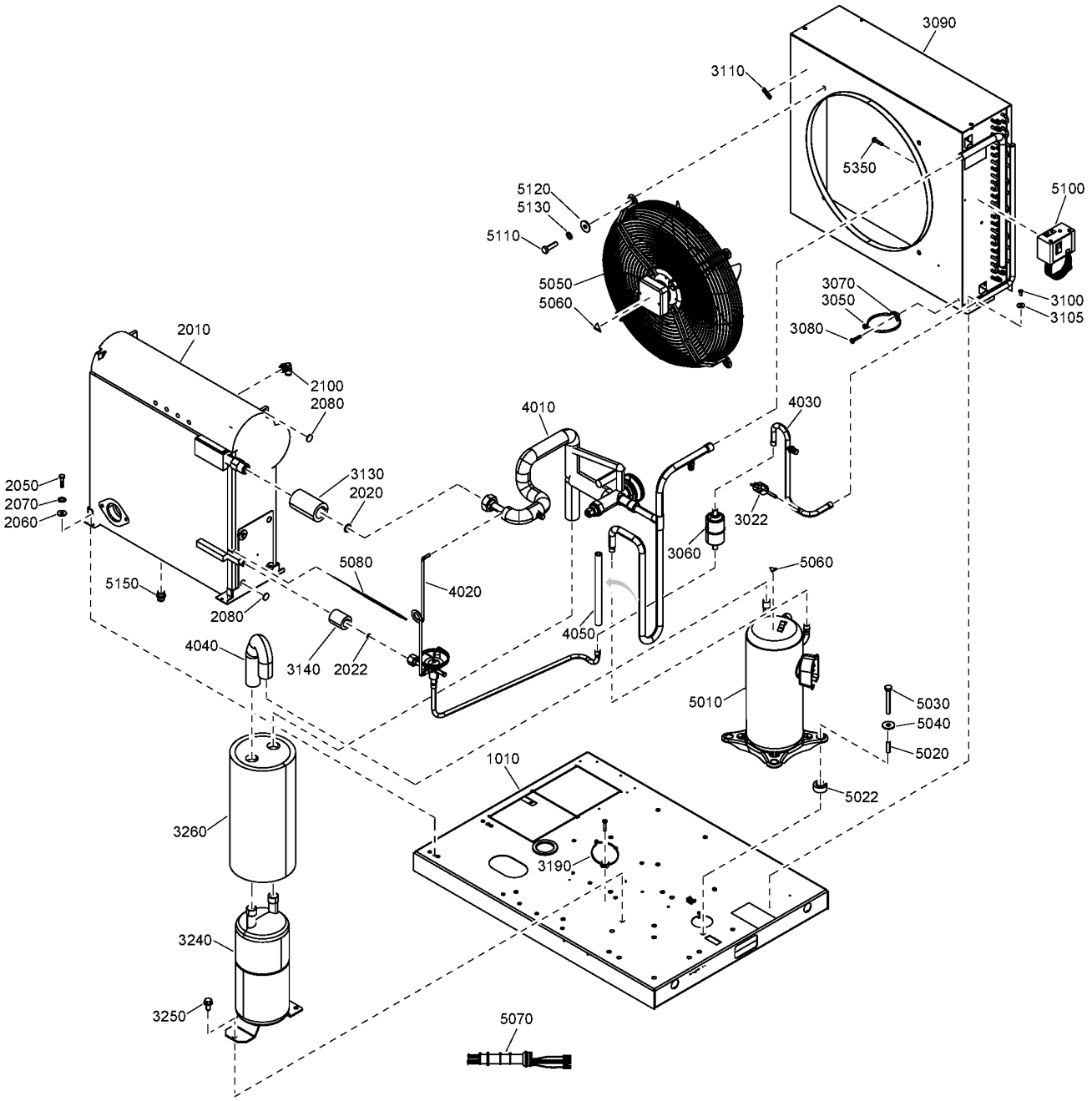
3090
3110
5350
5120
5130
5110
5100
5050
5060
3070
3050
3080
3100
3105
2010
2100
2080
4010
4030
2050
2070
2060
3130
2020
3022
3060
5060
5080
4020
5150
2080
4050
4040
3140
2022
5010
5030
5040
5020
1010
5022
3260
3190
3240
3250
5070

Ref	Part Number	Qty	Name	Validity	R.
4020	2204 1608 03	1	PIPE	**(09/03/2017 - 12/07/2017)** CAPPRE:IEC + FREQ:50HZ + MOVOL:400V **(13/07/2017 - 19/07/2017)** (MOVOL:200V , MOVOL:400V , MOVOL:500V) + CAPPRE:IEC + FREQ:50HZ **(20/07/2017 - 30/12/2027)** **(31/12/2027 - ...)** (((MOVOL:400V , MOVOL:500V) + FREQ:50HZ , FREQ:60HZ + MOVOL:460V) + CAPPRE:IEC , CAPPRE:ULCUL + FREQ:60HZ + MOVOL:460V)	
	• 1624 2488 07	1	REGULATOR VALVE	**(30/10/2019 - ...)**	
4030	2204 1608 30	1	PIPE	**(09/03/2017 - 12/07/2017)** CAPPRE:IEC + FREQ:50HZ + MOVOL:400V **(13/07/2017 - 19/07/2017)** (MOVOL:200V , MOVOL:400V , MOVOL:500V) + CAPPRE:IEC + FREQ:50HZ **(20/07/2017 - 30/12/2027)** **(31/12/2027 - ...)** (((MOVOL:400V , MOVOL:500V) + FREQ:50HZ , FREQ:60HZ + MOVOL:460V) + CAPPRE:IEC , CAPPRE:ULCUL + FREQ:60HZ + MOVOL:460V)	
	• 1624 9352 00	1	VALVE SCHRAEDER	**(18/01/2019 - ...)**	
4040	2204 1608 19	1	PIPE	**(09/03/2017 - 12/07/2017)** CAPPRE:IEC + FREQ:50HZ + MOVOL:400V **(13/07/2017 - 30/12/2027)** (MOVOL:200V , MOVOL:400V , MOVOL:500V) + CAPPRE:IEC + FREQ:50HZ **(31/12/2027 - ...)** (MOVOL:400V , MOVOL:500V) + CAPPRE:IEC + FREQ:50HZ	
4050	2204 1608 35	1	INSULATION	**(09/03/2018 - 30/12/2027)** (MOVOL:200V , MOVOL:400V , MOVOL:500V) + CAPPRE:IEC + FREQ:50HZ **(31/12/2027 - ...)** (MOVOL:400V , MOVOL:500V) + CAPPRE:IEC + FREQ:50HZ	
5010	2204 1512 00	1	COMPRESSOR	**(09/03/2017 - 12/07/2017)** CAPPRE:IEC + FREQ:50HZ + MOVOL:400V **(13/07/2017 - 30/12/2027)** (MOVOL:200V , MOVOL:400V , MOVOL:500V) + CAPPRE:IEC + FREQ:50HZ **(31/12/2027 - ...)** (MOVOL:400V , MOVOL:500V) + CAPPRE:IEC + FREQ:50HZ	
5010	1617 4641 00	1	COMPRESSOR	**(20/07/2017 - 30/12/2027)** ((MOVOL:230V , MOVOL:460V) + CAPPRE:ULCUL , CAPPRE:IEC + MOVOL:460V) + FREQ:60HZ **(31/12/2027 - ...)** FREQ:60HZ + MOVOL:460V	
5020	1617 4586 00	4	SPACER	**(09/03/2017 - 12/07/2017)** CAPPRE:IEC + FREQ:50HZ + MOVOL:400V **(13/07/2017 - 30/12/2027)** (MOVOL:200V , MOVOL:400V , MOVOL:500V) + CAPPRE:IEC + FREQ:50HZ **(31/12/2027 - ...)** (MOVOL:400V , MOVOL:500V) + CAPPRE:IEC + FREQ:50HZ	
5020	1624 2698 00	4	BUSHING	**(20/07/2017 - 30/12/2027)** ((MOVOL:230V , MOVOL:460V) + CAPPRE:ULCUL , CAPPRE:IEC + MOVOL:460V) + FREQ:60HZ **(31/12/2027 - ...)** FREQ:60HZ + MOVOL:460V	
5022	1627 1696 00	4	BUSHING	**(09/03/2017 - 12/07/2017)** CAPPRE:IEC + FREQ:50HZ + MOVOL:400V **(13/07/2017 - 19/07/2017)** (MOVOL:200V , MOVOL:400V , MOVOL:500V) + CAPPRE:IEC + FREQ:50HZ **(20/07/2017 - 30/12/2027)** **(31/12/2027 - ...)** (((MOVOL:400V , MOVOL:500V) + FREQ:50HZ , FREQ:60HZ + MOVOL:460V) + CAPPRE:IEC , CAPPRE:ULCUL + FREQ:60HZ + MOVOL:460V)	
5030	0147 1332 03	4	HEXAGON BOLT	**(09/03/2017 - 12/07/2017)** CAPPRE:IEC + FREQ:50HZ + MOVOL:400V **(13/07/2017 - 19/07/2017)** (MOVOL:200V , MOVOL:400V , MOVOL:500V) + CAPPRE:IEC + FREQ:50HZ **(20/07/2017 - 30/12/2027)** **(31/12/2027 - ...)** (((MOVOL:400V , MOVOL:500V) + FREQ:50HZ , FREQ:60HZ + MOVOL:460V) + CAPPRE:IEC , CAPPRE:ULCUL + FREQ:60HZ + MOVOL:460V)	
5040	0300 8019 00	4	PLAIN WASHER	**(09/03/2017 - 12/07/2017)** CAPPRE:IEC + FREQ:50HZ + MOVOL:400V **(13/07/2017 - 19/07/2017)** (MOVOL:200V , MOVOL:400V , MOVOL:500V) + CAPPRE:IEC + FREQ:50HZ **(20/07/2017 - 30/12/2027)** **(31/12/2027 - ...)** (((MOVOL:400V , MOVOL:500V) + FREQ:50HZ , FREQ:60HZ + MOVOL:460V) + CAPPRE:IEC , CAPPRE:ULCUL + FREQ:60HZ + MOVOL:460V)	

Legend:

CAPPRE:IEC - Component approval electrical:IEC
FREQ:60HZ - Frequency:60 Hz
MOVOL:200V - Supply voltage:200 V
MOVOL:460V - Supply voltage:460 V
CAPPRE:ULCUL - Component approval electrical:UL/cUL
IDRY:Y - Integrated dryer:Yes
MOVOL:230V - Supply voltage:230 V
MOVOL:500V - Supply voltage:500 V
FREQ:50HZ - Frequency:50 Hz
MODEL:GA110VP_16 - Model:GA 110VSD+
MOVOL:400V - Supply voltage:400 V

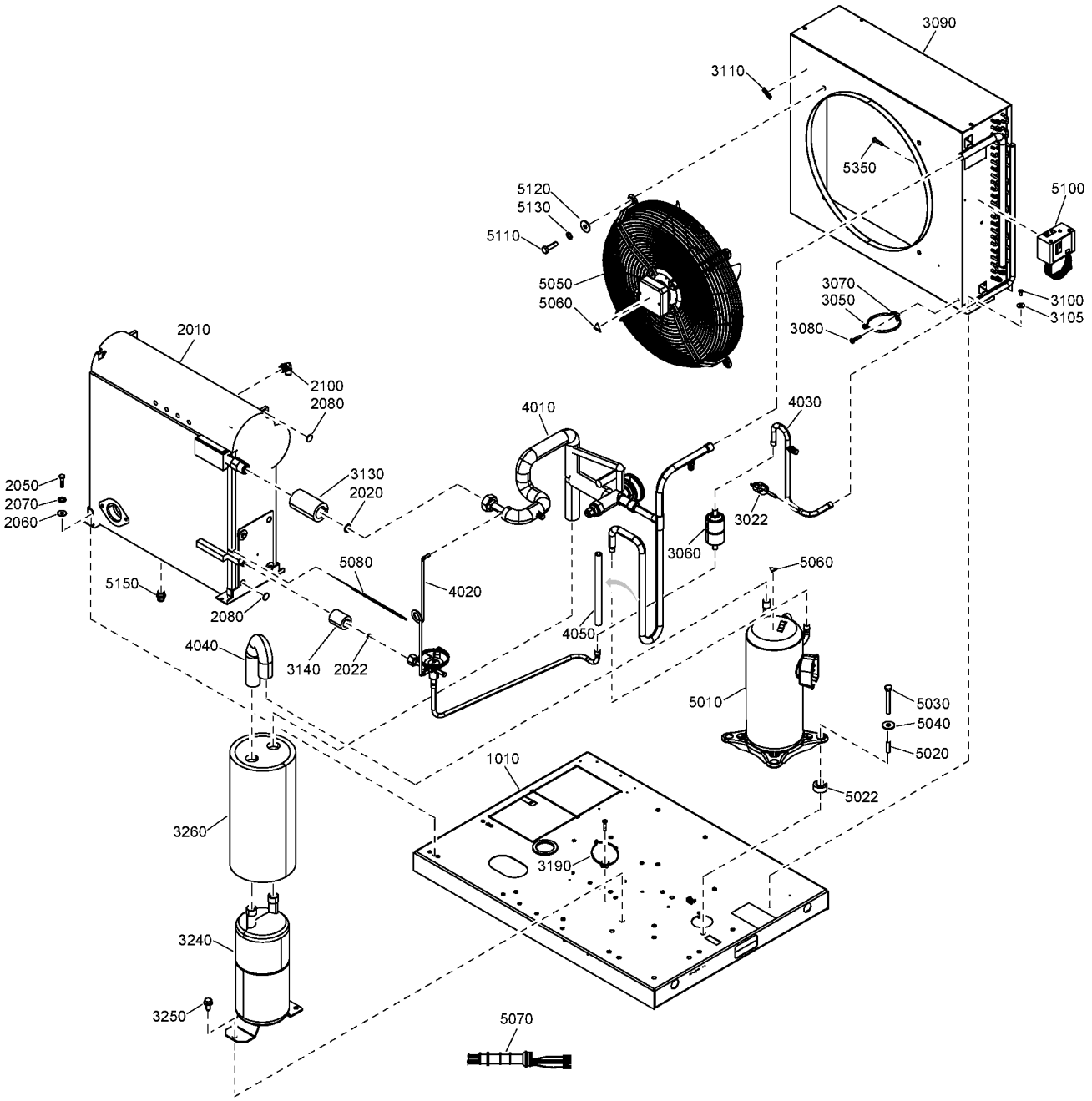
3090
3110
5350
5120
5130
5110
5100
5050
5060
3070
3050
3080
3100
3105
2010
2100
2080
4010
4030
2050
2070
2060
3130
2020
3022
3060
5060
5080
4020
5150
2080
4050
4040
3140
2022
5010
5030
5040
5020
1010
5022
3260
3190
3240
3250
5070

Ref	Part Number	Qty	Name	Validity	R.
5050	1624 9666 00	1	FAN	**(09/03/2017 - 12/07/2017)** CAPPRE:IEC + FREQ:50HZ + MOVOL:400V **(13/07/2017 - 30/12/2027)** (MOVOL:200V , MOVOL:400V , MOVOL:500V) + CAPPRE:IEC + FREQ:50HZ **(31/12/2027 - ...)** (MOVOL:400V , MOVOL:500V) + CAPPRE:IEC + FREQ:50HZ	
5050	1624 9667 00	1	FAN	**(20/07/2017 - 30/12/2027)** ((MOVOL:230V , MOVOL:460V) + CAPPRE:ULCUL , CAPPRE:IEC + MOVOL:460V) + FREQ:60HZ **(31/12/2027 - ...)** FREQ:60HZ + MOVOL:460V	
5060	1088 1001 01	4	WARNING MARK	**(09/03/2017 - 12/07/2017)** CAPPRE:IEC + FREQ:50HZ + MOVOL:400V **(13/07/2017 - 19/07/2017)** (MOVOL:200V , MOVOL:400V , MOVOL:500V) + CAPPRE:IEC + FREQ:50HZ **(20/07/2017 - 30/12/2027)** **(31/12/2027 - ...)** (((MOVOL:400V , MOVOL:500V) + FREQ:50HZ , FREQ:60HZ + MOVOL:460V) + CAPPRE:IEC , CAPPRE:ULCUL + FREQ:60HZ + MOVOL:460V)	
5070	2205 0408 01	1	WIRING	**(20/07/2017 - 30/12/2027)** ((MOVOL:230V , MOVOL:460V) + CAPPRE:ULCUL , CAPPRE:IEC + MOVOL:460V) + FREQ:60HZ **(31/12/2027 - ...)** FREQ:60HZ + MOVOL:460V	
5070	2205 0208 01	1	WIRING	**(09/03/2017 - 12/07/2017)** CAPPRE:IEC + FREQ:50HZ + MOVOL:400V **(13/07/2017 - 30/12/2027)** (MOVOL:200V , MOVOL:400V , MOVOL:500V) + CAPPRE:IEC + FREQ:50HZ **(31/12/2027 - ...)** (MOVOL:400V , MOVOL:500V) + CAPPRE:IEC + FREQ:50HZ	
5080	1617 3077 90	1	TEMPERATURE SENSOR	**(09/03/2017 - 12/07/2017)** CAPPRE:IEC + FREQ:50HZ + MOVOL:400V **(13/07/2017 - 19/07/2017)** (MOVOL:200V , MOVOL:400V , MOVOL:500V) + CAPPRE:IEC + FREQ:50HZ **(20/07/2017 - 30/12/2027)** **(31/12/2027 - ...)** (((MOVOL:400V , MOVOL:500V) + FREQ:50HZ , FREQ:60HZ + MOVOL:460V) + CAPPRE:IEC , CAPPRE:ULCUL + FREQ:60HZ + MOVOL:460V)	
5100	1089 9139 25	1	PRESSURE SWITCH	**(09/03/2017 - 12/07/2017)** CAPPRE:IEC + FREQ:50HZ + MOVOL:400V **(13/07/2017 - 19/07/2017)** (MOVOL:200V , MOVOL:400V , MOVOL:500V) + CAPPRE:IEC + FREQ:50HZ **(20/07/2017 - 30/12/2027)** **(31/12/2027 - ...)** (((MOVOL:400V , MOVOL:500V) + FREQ:50HZ , FREQ:60HZ + MOVOL:460V) + CAPPRE:IEC , CAPPRE:ULCUL + FREQ:60HZ + MOVOL:460V)	
5110	0147 1326 03	4	SCREW	**(09/03/2017 - 12/07/2017)** CAPPRE:IEC + FREQ:50HZ + MOVOL:400V **(13/07/2017 - 19/07/2017)** (MOVOL:200V , MOVOL:400V , MOVOL:500V) + CAPPRE:IEC + FREQ:50HZ **(20/07/2017 - 30/12/2027)** **(31/12/2027 - ...)** (((MOVOL:400V , MOVOL:500V) + FREQ:50HZ , FREQ:60HZ + MOVOL:460V) + CAPPRE:IEC , CAPPRE:ULCUL + FREQ:60HZ + MOVOL:460V)	
5120	0300 8019 00	4	PLAIN WASHER	**(09/03/2017 - 12/07/2017)** CAPPRE:IEC + FREQ:50HZ + MOVOL:400V **(13/07/2017 - 19/07/2017)** (MOVOL:200V , MOVOL:400V , MOVOL:500V) + CAPPRE:IEC + FREQ:50HZ **(20/07/2017 - 30/12/2027)** **(31/12/2027 - ...)** (((MOVOL:400V , MOVOL:500V) + FREQ:50HZ , FREQ:60HZ + MOVOL:460V) + CAPPRE:IEC , CAPPRE:ULCUL + FREQ:60HZ + MOVOL:460V)	
5130	0333 3227 00	4	WASHER	**(09/03/2017 - 12/07/2017)** CAPPRE:IEC + FREQ:50HZ + MOVOL:400V **(13/07/2017 - 19/07/2017)** (MOVOL:200V , MOVOL:400V , MOVOL:500V) + CAPPRE:IEC + FREQ:50HZ **(20/07/2017 - 30/12/2027)** **(31/12/2027 - ...)** (((MOVOL:400V , MOVOL:500V) + FREQ:50HZ , FREQ:60HZ + MOVOL:460V) + CAPPRE:IEC , CAPPRE:ULCUL + FREQ:60HZ + MOVOL:460V)	
5150	0583 8100 71	1	PIPE FITTING	**(09/03/2017 - 23/05/2017)** CAPPRE:IEC + FREQ:50HZ + MOVOL:400V	

Legend:

CAPPRE:IEC - Component approval electrical:IEC
CAPPRE:ULCUL - Component approval electrical:UL/cUL
FREQ:50HZ - Frequency:50 Hz
FREQ:60HZ - Frequency:60 Hz
IDRY:Y - Integrated dryer:Yes
MODEL:GA110VP_16 - Model:GA 110VSD+
MOVOL:200V - Supply voltage:200 V
MOVOL:230V - Supply voltage:230 V
MOVOL:400V - Supply voltage:400 V
MOVOL:460V - Supply voltage:460 V
MOVOL:500V - Supply voltage:500 V

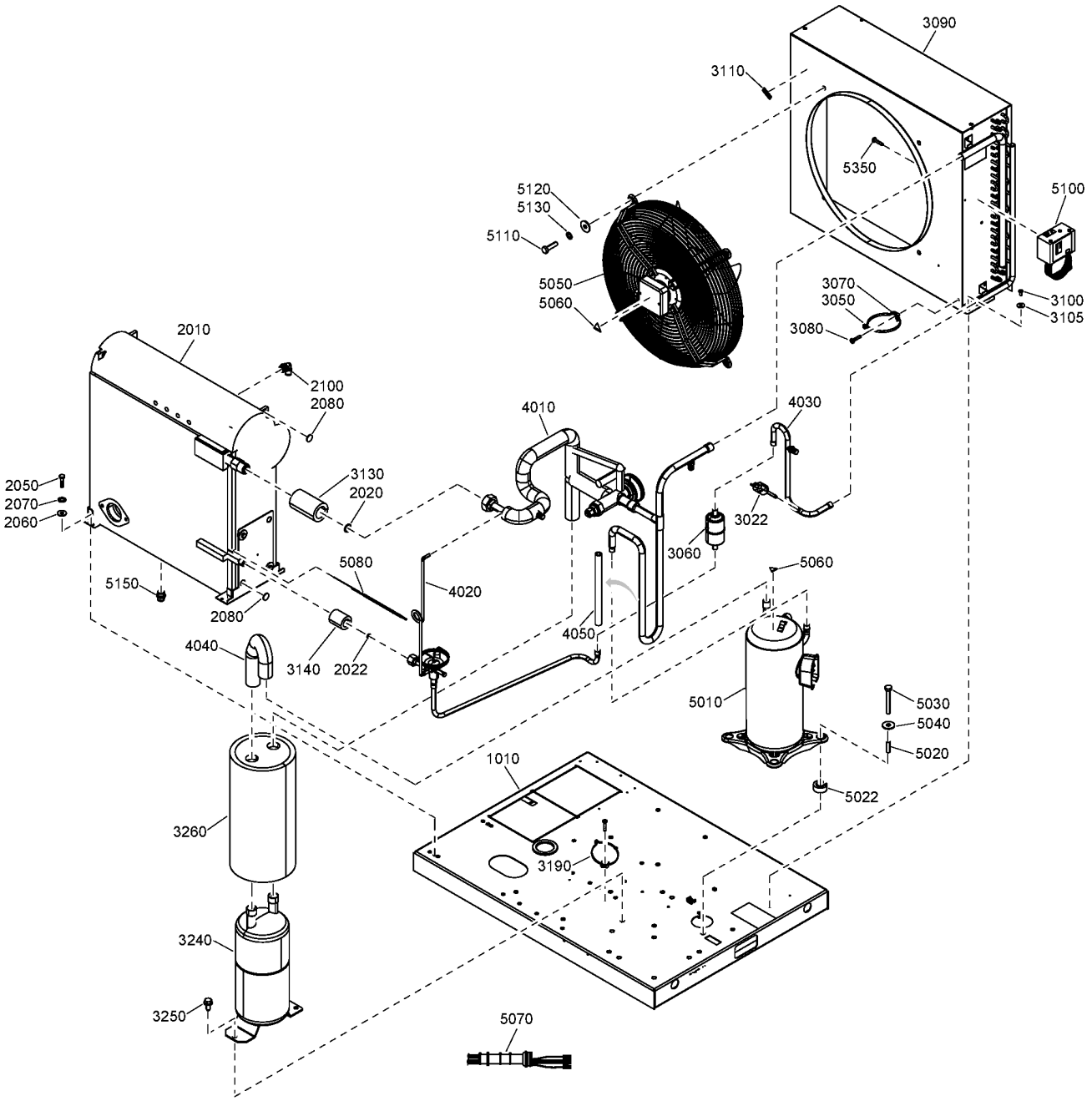
3090
3110
5350
5120
5130
5110
5100
5050
5060
3070
3050
3080
3100
3105
2010
2100
2080
4010
4030
2050
2070
2060
3130
2020
3022
3060
5060
5080
4020
5150
2080
4050
4040
3140
2022
5010
5030
5040
5020
1010
5022
3260
3190
3240
3250
5070

Ref	Part Number	Qty	Name	Validity	R.
5350	~~0226 3343 07~~	2	TAPPING SCREW	**(09/03/2017 - 12/07/2017)** CAPPRE:IEC + FREQ:50HZ + MOVOL:400V **(13/07/2017 - 19/07/2017)** (MOVOL:200V , MOVOL:400V , MOVOL:500V) + CAPPRE:IEC + FREQ:50HZ **(20/07/2017 - 30/12/2027)** **(31/12/2027 - ...)** (((MOVOL:400V , MOVOL:500V) + FREQ:50HZ , FREQ:60HZ + MOVOL:460V) + CAPPRE:IEC , CAPPRE:ULCUL + FREQ:60HZ + MOVOL:460V)	
	Substituted by:	0226 0047 13 - TAPPING SCREW (quantity: 1)			

Legend:

CAPPRE:IEC - Component approval electrical:IEC
CAPPRE:ULCUL - Component approval electrical:UL/cUL
FREQ:50HZ - Frequency:50 Hz
FREQ:60HZ - Frequency:60 Hz
IDRY:Y - Integrated dryer:Yes
MODEL:GA110VP_16 - Model:GA 110VSD+
MOVOL:200V - Supply voltage:200 V
MOVOL:230V - Supply voltage:230 V
MOVOL:400V - Supply voltage:400 V
MOVOL:460V - Supply voltage:460 V
MOVOL:500V - Supply voltage:500 V

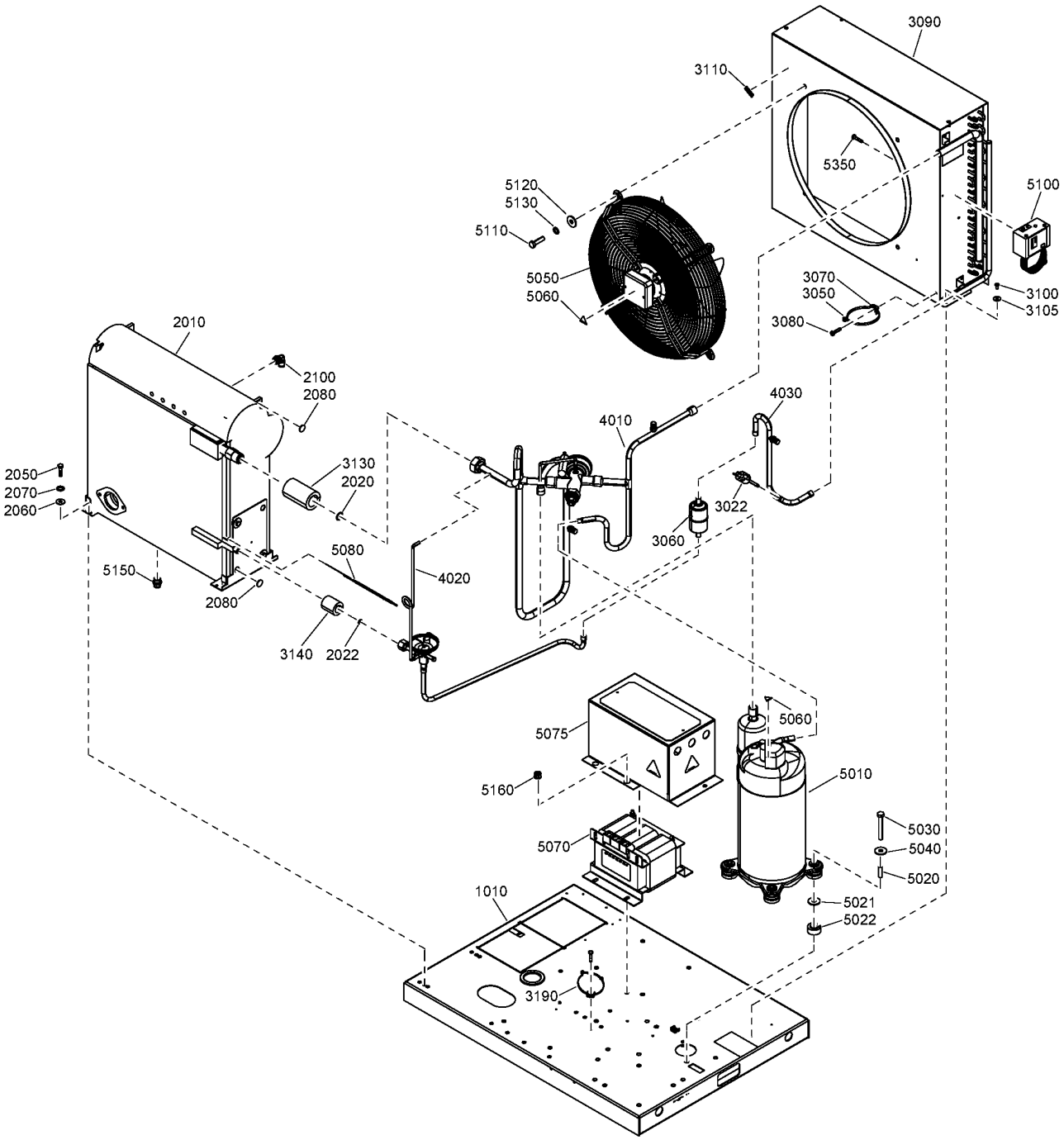
3090
3110
5350
5100
5120
5130
5110
5050
5060
3070
3050
3080
3100
3105
2010
2100
2080
4030
4010
2050
2070
2060
3130
2020
3022
3060
5080
5150
4020
2080
3140
2022
5060
5075
5010
5160
5030
5040
5070
5020
1010
5021
5022
3190

Ref	Part Number	Qty	Name	Validity	R.
	4102 0040 14	1	AIR DRYER	(09/03/2017 - ...)	R410A
1010	1624 9506 80	1	FRAME	(09/03/2017 - 12/07/2017) MOVOL:380V (13/07/2017 - 30/12/2027) (31/12/2027 - ...) MOVOL:380V	
	• 1622 0000 20	1	DECAL SYMBOLS		
	• 1627 1828 00	1	DECAL WARNING		
2010	2204 1604 80	1	HEAT EXCHANGER	(09/03/2017 - 12/07/2017) MOVOL:380V (13/07/2017 - 30/12/2027) (31/12/2027 - ...) MOVOL:380V	
2020	~~1617 0315 00~~	1	RING (ALL)	(09/03/2017 - 12/07/2017) MOVOL:380V (13/07/2017 - 30/12/2027) (31/12/2027 - ...) MOVOL:380V	
	Substituted by:	1617 0165 00 - RING (quantity: 1)			
2022	1617 0092 03	1	RING	(09/03/2017 - 12/07/2017) MOVOL:380V (13/07/2017 - 30/12/2027) (31/12/2027 - ...) MOVOL:380V	
2050	0147 1247 03	4	HEXAGON BOLT	(09/03/2017 - 12/07/2017) MOVOL:380V (13/07/2017 - 30/12/2027) (31/12/2027 - ...) MOVOL:380V	
2060	0300 0274 64	4	WASHER	(09/03/2017 - 12/07/2017) MOVOL:380V (13/07/2017 - 30/12/2027) (31/12/2027 - ...) MOVOL:380V	
2070	0333 3220 00	4	WASHER	(09/03/2017 - 12/07/2017) MOVOL:380V (13/07/2017 - 30/12/2027) (31/12/2027 - ...) MOVOL:380V	
2080	1624 2451 00	2	INSULATION	(09/03/2017 - 12/07/2017) MOVOL:380V (13/07/2017 - 08/03/2018)	
2100	0583 8120 81	1	PIPE FITTING	(24/05/2017 - 12/07/2017) MOVOL:380V (13/07/2017 - 30/12/2027) (31/12/2027 - ...) MOVOL:380V	
3022	1089 9139 16	1	HP SWITCH	(09/03/2017 - 12/07/2017) MOVOL:380V (13/07/2017 - 30/12/2027) (31/12/2027 - ...) MOVOL:380V	
3050	0348 0101 13	1	CABLE TIE	(09/03/2017 - 12/07/2017) MOVOL:380V (13/07/2017 - 30/12/2027) (31/12/2027 - ...) MOVOL:380V	
3060	1617 4617 00	1	FILTER	(09/03/2017 - 12/07/2017) MOVOL:380V (13/07/2017 - 30/12/2027) (31/12/2027 - ...) MOVOL:380V	
3070	0348 0110 03	1	ANCHOR PLATE	(09/03/2017 - 12/07/2017) MOVOL:380V (13/07/2017 - 30/12/2027) (31/12/2027 - ...) MOVOL:380V	
3080	~~0226 3343 07~~	1	TAPPING SCREW	(09/03/2017 - 12/07/2017) MOVOL:380V (13/07/2017 - 30/12/2027) (31/12/2027 - ...) MOVOL:380V	
	Substituted by:	0226 0047 13 - TAPPING SCREW (quantity: 1)			
3090	2204 1606 00	1	CONDENSER	(09/03/2017 - 12/07/2017) MOVOL:380V (13/07/2017 - 30/12/2027) (31/12/2027 - ...) MOVOL:380V	
3100	0226 3256 00	4	SCREW	(09/03/2017 - 12/07/2017) MOVOL:380V (13/07/2017 - 30/12/2027) (31/12/2027 - ...) MOVOL:380V	
3105	0300 0274 70	4	WASHER	(09/03/2017 - 12/07/2017) MOVOL:380V (13/07/2017 - 30/12/2027) (31/12/2027 - ...) MOVOL:380V	
3110	1617 2385 00	1	ROTATION ARROW	(09/03/2017 - 12/07/2017) MOVOL:380V (13/07/2017 - 30/12/2027) (31/12/2027 - ...) MOVOL:380V	
3130	1624 9718 00	1	INSULATION	(09/03/2017 - 12/07/2017) MOVOL:380V (13/07/2017 - 08/03/2018)	
3140	1617 2361 00	1	INLET INSULATION	(09/03/2017 - 12/07/2017) MOVOL:380V (13/07/2017 - 08/03/2018)	
3140	1624 2386 00	1	OUTLET INSULATION	(09/03/2018 - 30/12/2027) (31/12/2027 - ...) MOVOL:380V	
3190	0348 0101 13	1	CABLE TIE	(09/03/2017 - 12/07/2017) MOVOL:380V (13/07/2017 - 30/12/2027) (31/12/2027 - ...) MOVOL:380V	
4010	2204 1608 50	1	PIPE	(09/03/2017 - 12/07/2017) MOVOL:380V (13/07/2017 - 30/12/2027) (31/12/2027 - ...) MOVOL:380V	
	• 1624 9352 00	2	VALVE SCHRAEDER	(18/01/2019 - ...)	

Legend:

CAPPRE:IEC - Component approval electrical:IEC
MODEL:GA110VP_16 - Model:GA 110VSD+
FREQ:60HZ - Frequency:60 Hz
MOVOL:200V - Supply voltage:200 V
IDRY:Y - Integrated dryer:Yes
MOVOL:380V - Supply voltage:380 V

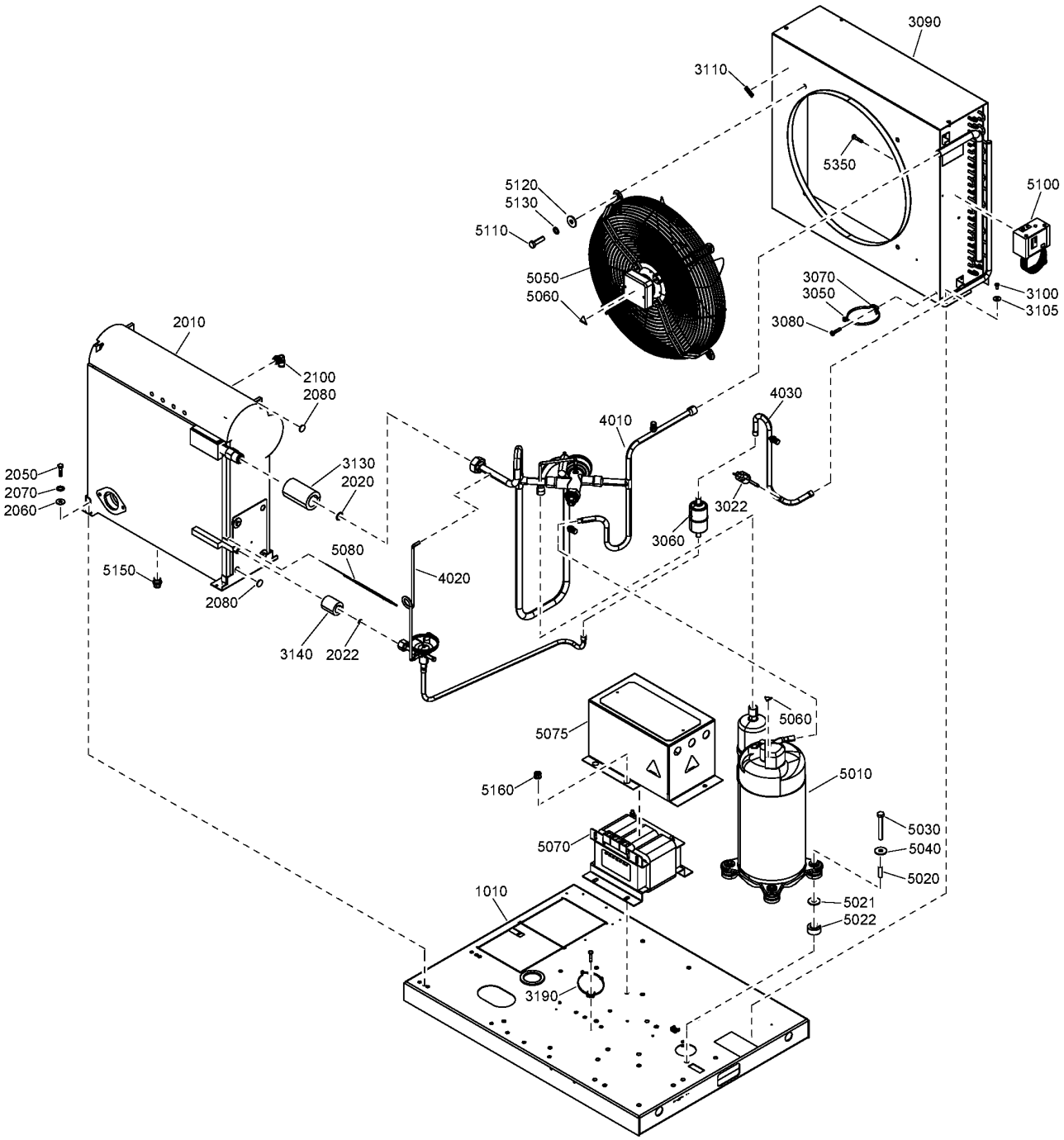
3090
3110
5350
5100
5120
5130
5110
5050
5060
3070
3050
3080
3100
3105
2010
2100
2080
4030
4010
2050
2070
2060
3130
2020
3022
3060
5080
4020
5150
2080
3140
2022
5060
5075
5010
5160
5030
5040
5070
5020
1010
5021
5022
3190

Ref	Part Number	Qty	Name	Validity	R.
4020	2204 1608 03	1	PIPE	**(09/03/2017 - 12/07/2017)** MOVOL:380V **(13/07/2017 - 30/12/2027)** **(31/12/2027 - ...)** MOVOL:380V	
4030	2204 1608 30	1	PIPE	**(09/03/2017 - 12/07/2017)** MOVOL:380V **(13/07/2017 - 30/12/2027)** **(31/12/2027 - ...)** MOVOL:380V	
	• 1624 9352 00	1	VALVE SCHRAEDER	**(18/01/2019 - ...)**	
5010	1617 4641 00	1	COMPRESSOR	**(09/03/2017 - 12/07/2017)** MOVOL:380V **(13/07/2017 - 30/12/2027)** **(31/12/2027 - ...)** MOVOL:380V	
5020	1624 2698 00	4	BUSHING	**(09/03/2017 - 12/07/2017)** MOVOL:380V **(13/07/2017 - 30/12/2027)** **(31/12/2027 - ...)** MOVOL:380V	
5021	0300 8019 00	4	PLAIN WASHER	**(09/03/2017 - 12/07/2017)** MOVOL:380V **(13/07/2017 - 30/12/2027)** **(31/12/2027 - ...)** MOVOL:380V	
5022	1627 1696 00	4	BUSHING	**(09/03/2017 - 12/07/2017)** MOVOL:380V **(13/07/2017 - 30/12/2027)** **(31/12/2027 - ...)** MOVOL:380V	
5030	0147 1332 03	4	HEXAGON BOLT	**(09/03/2017 - 12/07/2017)** MOVOL:380V **(13/07/2017 - 30/12/2027)** **(31/12/2027 - ...)** MOVOL:380V	
5040	0300 8019 00	4	PLAIN WASHER	**(09/03/2017 - 12/07/2017)** MOVOL:380V **(13/07/2017 - 30/12/2027)** **(31/12/2027 - ...)** MOVOL:380V	
5050	1624 9667 00	1	FAN	**(09/03/2017 - 12/07/2017)** MOVOL:380V **(13/07/2017 - 30/12/2027)** **(31/12/2027 - ...)** MOVOL:380V	
5060	1088 1001 01	4	WARNING MARK	**(09/03/2017 - 12/07/2017)** MOVOL:380V **(13/07/2017 - 30/12/2027)** **(31/12/2027 - ...)** MOVOL:380V	
5070	2202 9109 01	1	TRANSFORMER	**(09/03/2017 - 12/07/2017)** MOVOL:380V **(13/07/2017 - 30/12/2027)** **(31/12/2027 - ...)** MOVOL:380V	
5075	2205 0208 21	1	TRANSFORMER BOX	**(09/03/2017 - 12/07/2017)** MOVOL:380V **(13/07/2017 - 30/12/2027)** **(31/12/2027 - ...)** MOVOL:380V	
5080	1617 3077 90	1	TEMPERATURE SENSOR	**(09/03/2017 - 12/07/2017)** MOVOL:380V **(13/07/2017 - 30/12/2027)** **(31/12/2027 - ...)** MOVOL:380V	
5100	1089 9139 25	1	PRESSURE SWITCH	**(09/03/2017 - 12/07/2017)** MOVOL:380V **(13/07/2017 - 30/12/2027)** **(31/12/2027 - ...)** MOVOL:380V	
5110	0147 1326 03	4	SCREW	**(09/03/2017 - 12/07/2017)** MOVOL:380V **(13/07/2017 - 30/12/2027)** **(31/12/2027 - ...)** MOVOL:380V	
5120	0300 8019 00	4	PLAIN WASHER	**(09/03/2017 - 12/07/2017)** MOVOL:380V **(13/07/2017 - 30/12/2027)** **(31/12/2027 - ...)** MOVOL:380V	
5130	0333 3227 00	4	WASHER	**(09/03/2017 - 12/07/2017)** MOVOL:380V **(13/07/2017 - 30/12/2027)** **(31/12/2027 - ...)** MOVOL:380V	
5150	0583 8100 71	1	PIPE FITTING	**(09/03/2017 - 23/05/2017)** MOVOL:380V	
5160	0129 3270 38	4	RIVET	**(09/03/2017 - 12/07/2017)** MOVOL:380V **(13/07/2017 - 30/12/2027)** **(31/12/2027 - ...)** MOVOL:380V	
5350	~~0226 3343 07~~	2	TAPPING SCREW	**(09/03/2017 - 12/07/2017)** MOVOL:380V **(13/07/2017 - 30/12/2027)** **(31/12/2027 - ...)** MOVOL:380V	
	Substituted by:	0226 0047 13 - TAPPING SCREW (quantity: 1)			

Legend:

CAPPRE:IEC - Component approval electrical:IEC
FREQ:60HZ - Frequency:60 Hz
IDRY:Y - Integrated dryer:Yes
MODEL:GA110VP_16 - Model:GA 110VSD+
MOVOL:200V - Supply voltage:200 V
MOVOL:380V - Supply voltage:380 V

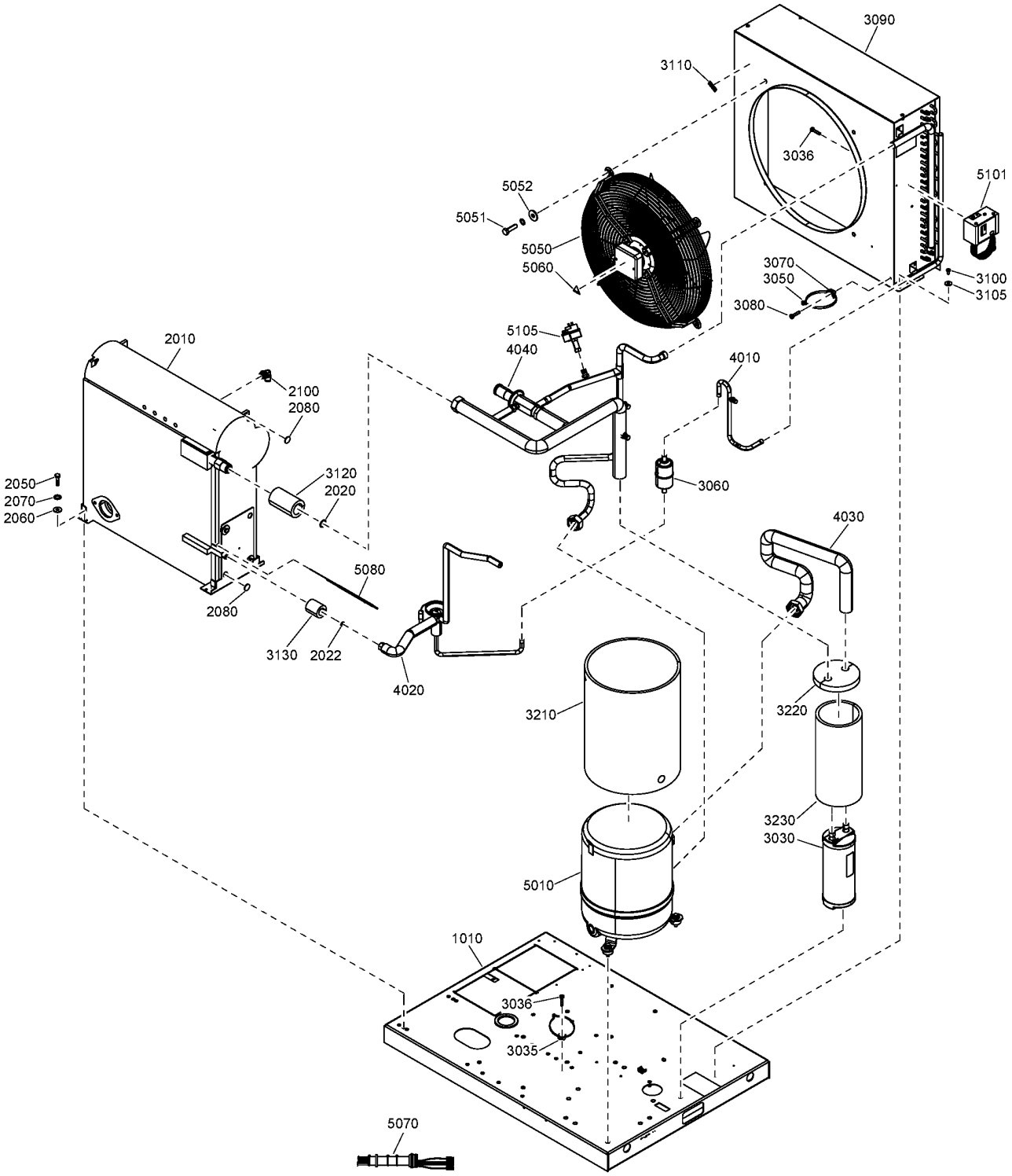
3090
3110
3036
5101
5052
5051
5050
5060
3070
3050
3080
3100
3105
5105
4040
4010
2010
2100
2080
3120
2020
3060
2050
2070
2060
4030
5080
2080
3130
2022
4020
3210
3220
3230
3030
5010
1010
3036
3035
5070

Ref	Part Number	Qty	Name	Validity	R.
	2200 9029 63	1	AIR DRYER	(09/03/2017 - ...)	R134A
1010	1624 9506 80	1	FRAME	(09/03/2017 - ...)	
	• 1622 0000 20	1	DECAL SYMBOLS		
	• 1627 1828 00	1	DECAL WARNING		
2010	2204 1604 80	1	HEAT EXCHANGER	(09/03/2017 - ...)	
2020	~~1617 0315 00~~	1	RING (ALL)	(09/03/2017 - ...)	
	♻ **Substituted by:**	1617 0165 00 - RING (quantity: 1)			
2022	1617 0092 03	1	RING	(09/03/2017 - ...)	
2050	0147 1247 03	4	HEXAGON BOLT	(09/03/2017 - ...)	
2060	0300 0274 64	4	WASHER	(09/03/2017 - ...)	
2070	0333 3220 00	4	WASHER	(09/03/2017 - ...)	
2080	1624 2451 00	2	INSULATION	(09/03/2017 - 08/03/2018)	
2100	0583 8120 81	1	PIPE FITTING	(24/05/2017 - ...)	
3030	1627 1883 00	1	LIQUID SEPARATOR	(09/03/2017 - ...)	
3035	0348 0110 03	1	ANCHOR PLATE	(09/03/2017 - ...)	
3036	~~0226 3343 07~~	3	TAPPING SCREW	(09/03/2017 - ...)	
	♻ **Substituted by:**	0226 0047 13 - TAPPING SCREW (quantity: 1)			
3050	0348 0101 13	1	CABLE TIE	(09/03/2017 - ...)	
3060	1617 4617 00	1	FILTER	(09/03/2017 - ...)	
3070	0348 0110 03	1	ANCHOR PLATE	(09/03/2017 - ...)	
3080	~~0226 3343 07~~	1	TAPPING SCREW	(09/03/2017 - ...)	
	♻ **Substituted by:**	0226 0047 13 - TAPPING SCREW (quantity: 1)			
3090	2204 1606 00	1	CONDENSER	(09/03/2017 - ...)	
3100	0226 3256 00	4	SCREW	(09/03/2017 - ...)	
3105	0300 0274 70	4	WASHER	(09/03/2017 - ...)	
3110	1617 2385 00	1	ROTATION ARROW	(09/03/2017 - ...)	
3120	1624 2386 00	1	INSULATION OUTLET HE	(09/03/2017 - ...)	
3130	1624 2386 00	2	INSULATION OUTLET HE	(09/03/2018 - ...)	
3130	1617 2361 00	2	INSULATION INLET HE	(09/03/2017 - 08/03/2018)	
3210	2202 9604 00	1	INSULATION	(09/03/2017 - ...)	
3220	1627 1884 00	1	INSULATION THERMAL	(09/03/2017 - ...)	
3230	1627 1885 00	1	INSULATION THERMAL	(09/03/2017 - ...)	
4010	2204 1608 98	1	LIQUID LINE	(09/03/2017 - ...)	
4020	2204 1608 81	1	PIPE	(09/03/2017 - ...)	
4030	2204 1608 99	1	PIPE	(09/03/2017 - ...)	
4040	2204 1608 70	1	PIPE	(09/03/2017 - ...)	
	• 2202 8185 01	1	BYPASS VALVE		
5010	1614 7168 12	1	COMPRESSOR	(09/03/2017 - ...)	
5050	1624 9667 00	1	FAN	(09/03/2017 - ...)	
5051	0147 1326 03	4	SCREW	(09/03/2017 - ...)	
5052	0300 8019 00	4	PLAIN WASHER	(09/03/2017 - ...)	
5060	1088 1001 01	4	WARNING MARK	(09/03/2017 - ...)	
5070	2205 0408 11	1	WIRING	(09/03/2017 - ...)	
5080	1617 3077 90	1	TEMPERATURE SENSOR	(09/03/2017 - ...)	
5101	1089 9139 35	1	PRESSURE SWITCH	(09/03/2017 - ...)	
5105	1627 1852 00	1	HIGH PRESSURE SWITCH	(09/03/2017 - ...)	

Legend:

CAPPRE:ULCUL - Component approval electrical:UL/cUL
FREQ:60HZ - Frequency:60 Hz
IDRY:Y - Integrated dryer:Yes
MODEL:GA110VP_16 - Model:GA 110VSD+
MOVOL:575V - Supply voltage:575 V

((((MOVOL:200V , MOVOL:380V) + MODEL:GA75VP_16 , MOVOL:460V) + FREQ:60HZ , (MOVOL:200V , MOVOL:400V , MOVOL:500V) + FREQ:50HZ) + CAPPRE:IEC , (MOVOL:230V , MOVOL:460V , MOVOL:575V) + CAPPRE:ULCUL + FREQ:60HZ) + IDRY:Y

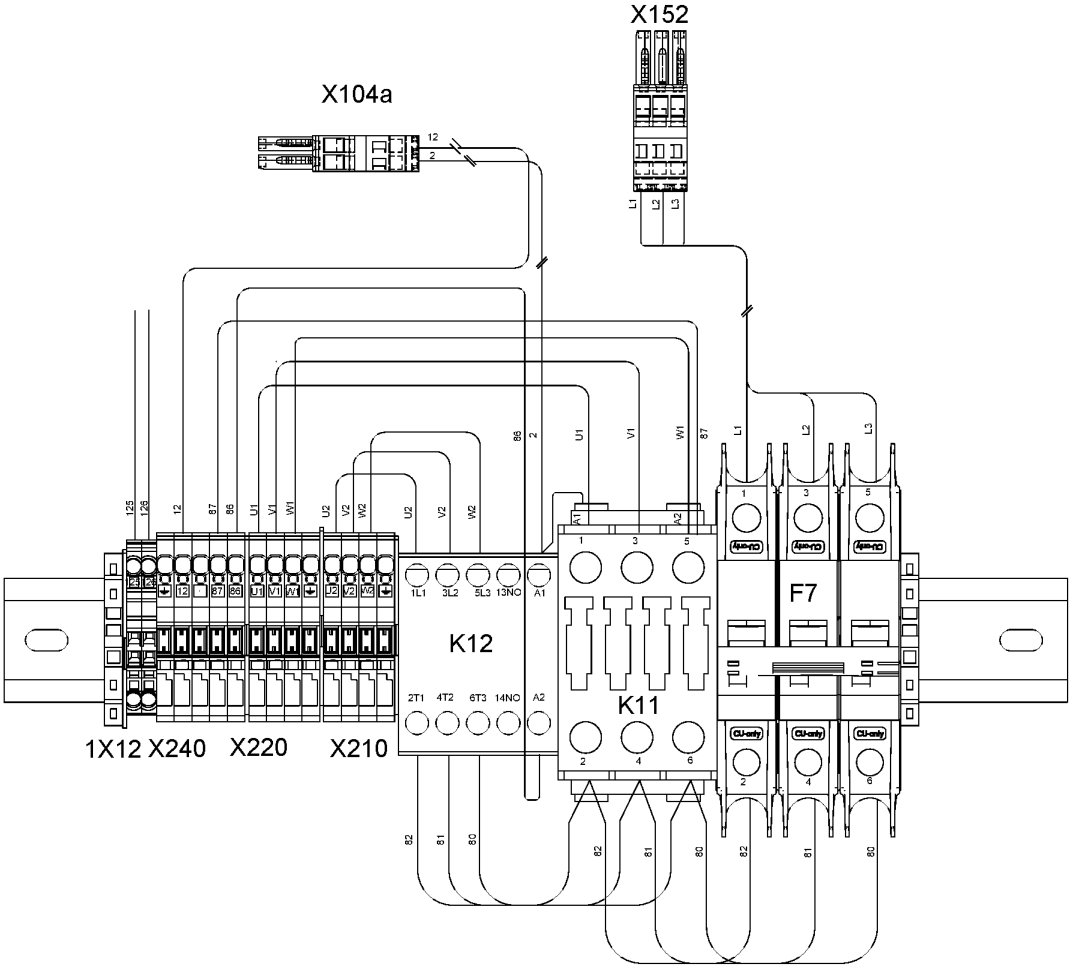

20.14 - Dryer rail Without trafo on dryer

((((MOVOL:200V , MOVOL:380V) + MODEL:GA75VP_16 , MOVOL:460V) + FREQ:60HZ , (MOVOL:200V , MOVOL:400V , MOVOL:500V) + FREQ:50HZ) + CAPPRE:IEC , (MOVOL:230V , MOVOL:460V , MOVOL:575V) + CAPPRE:ULCUL + FREQ:60HZ) + IDRY:Y

Ref	Part Number	Qty	Name	Validity	EL
	1900 2203 02	1	DRYER RAIL	**(20/07/2017 - 27/08/2017)** (((((CAPPRM:AS1210 , CAPPRM:CE , CAPPRM:MHLW , CAPPRM:MOM) + MOVOL:400V , CAPPRM:CE + MOVOL:500V , CAPPRM:MHLW + MOVOL:200V) + FREQ:50HZ , (CAPPRM:ASME , CAPPRM:MHLW) + FREQ:60HZ + MOVOL:460V) + CAPPRE:IEC , (MOVOL:230V , MOVOL:460V , MOVOL:575V) + CAPPRE:ULCUL + CAPPRM:ASME + FREQ:60HZ) + (MODEL:GA110VP_16 , MODEL:GA90VP_16) , (CAPPRM:ASME + MOVOL:380V , CAPPRM:MHLW + MOVOL:200V) + CAPPRE:IEC + FREQ:60HZ + MODEL:GA75VP_16) + COOL:AIR **(28/08/2017 - 20/08/2018)** ((((CAPPRM:AS1210 , CAPPRM:CE , CAPPRM:MHLW , CAPPRM:MOM) + MOVOL:400V , CAPPRM:CE + MOVOL:500V , CAPPRM:MHLW + MOVOL:200V) + FREQ:50HZ , ((MODEL:GA75VP_16 + MOVOL:200V , MOVOL:460V) + CAPPRM:MHLW , (MODEL:GA75VP_16 + MOVOL:380V , MOVOL:460V) + CAPPRM:ASME) + FREQ:60HZ) + CAPPRE:IEC , (MOVOL:230V , MOVOL:460V , MOVOL:575V) + CAPPRE:ULCUL + CAPPRM:ASME + FREQ:60HZ) + COOL:AIR **(21/08/2018 - 10/12/2018)** (((CAPPRM:AS1210 , CAPPRM:CE , CAPPRM:MHLW , CAPPRM:MOM) + MOVOL:400V , (CAPPRM:CE + MOVOL:500V , CAPPRM:MHLW + MOVOL:200V) + COOL:AIR) + FREQ:50HZ , ((COOL:AIR + MODEL:GA75VP_16 + MOVOL:200V , MOVOL:460V) + CAPPRM:MHLW , (MODEL:GA75VP_16 + MOVOL:380V , MOVOL:460V) + CAPPRM:ASME) + FREQ:60HZ) + CAPPRE:IEC , ((MOVOL:230V , MOVOL:575V) + COOL:AIR , MOVOL:460V) + CAPPRE:ULCUL + CAPPRM:ASME + FREQ:60HZ **(11/12/2018 - 30/12/2027)** (((CAPPRM:AS1210 , CAPPRM:CE , CAPPRM:MHLW , CAPPRM:MOM) + MOVOL:400V , (CAPPRM:CE + MOVOL:500V , CAPPRM:MHLW + MOVOL:200V) + COOL:AIR) + FREQ:50HZ , ((CAPPRM:ASME , CAPPRM:MHLW) + (COOL:AIR + MODEL:GA90VP_16 , COOL:WATER) + MOVOL:460V , (CAPPRM:ASME + MOVOL:380V , CAPPRM:MHLW + COOL:AIR + MOVOL:200V) + MODEL:GA75VP_16) + FREQ:60HZ) + CAPPRE:IEC , ((MOVOL:230V , MOVOL:575V) + COOL:AIR , MOVOL:460V) + CAPPRE:ULCUL + CAPPRM:ASME + FREQ:60HZ **(31/12/2027 - ...)** ((((MODEL:GA75VP_16 , MODEL:GA90VP_16) + CAPPRM:MHLW + MOVOL:200V , CAPPRM:CE + MOVOL:500V) + COOL:AIR , (CAPPRM:AS1210 , CAPPRM:CE , CAPPRM:MHLW , CAPPRM:MOM) + MOVOL:400V) + FREQ:50HZ , ((CAPPRM:ASME , CAPPRM:MHLW) + (COOL:AIR + MODEL:GA90VP_16 , COOL:WATER) + MOVOL:460V , (CAPPRM:ASME + MOVOL:380V , CAPPRM:MHLW + COOL:AIR + MOVOL:200V) + MODEL:GA75VP_16) + FREQ:60HZ) + CAPPRE:IEC , (((MODEL:GA75VP_16 , MODEL:GA90VP_16) + MOVOL:230V , MOVOL:575V) + COOL:AIR , MOVOL:460V) + CAPPRE:ULCUL + CAPPRM:ASME + FREQ:60HZ	

Electrical legend: Without trafo on dryer

Legend:

CAPPRE:IEC - Component approval electrical:IEC
CAPPRE:ULCUL - Component approval electrical:UL/cUL
CAPPRM:AS1210 - Component approval mechanical:AS1210
CAPPRM:ASME - Component approval mechanical:ASME
CAPPRM:CE - Component approval mechanical:CE
CAPPRM:MHLW - Component approval mechanical:MHLW
CAPPRM:MOM - Component approval mechanical:MOM
COOL:AIR - Cooling:Air cooled
COOL:WATER - Cooling:Water cooled
FREQ:50HZ - Frequency:50 Hz
FREQ:60HZ - Frequency:60 Hz
IDRY:Y - Integrated dryer:Yes
MODEL:GA110VP_16 - Model:GA 110VSD+
MODEL:GA75VP_16 - Model:GA 75VSD+
MODEL:GA90VP_16 - Model:GA 90VSD+
MOVOL:200V - Supply voltage:200 V
MOVOL:230V - Supply voltage:230 V
MOVOL:380V - Supply voltage:380 V
MOVOL:400V - Supply voltage:400 V
MOVOL:460V - Supply voltage:460 V
MOVOL:500V - Supply voltage:500 V
MOVOL:575V - Supply voltage:575 V

20.14 - Dryer rail Without trafo on dryer

((((MOVOL:200V , MOVOL:380V) + MODEL:GA75VP_16 , MOVOL:460V) + FREQ:60HZ , (MOVOL:200V , MOVOL:400V , MOVOL:500V) + FREQ:50HZ) + CAPPRE:IEC , (MOVOL:230V , MOVOL:460V , MOVOL:575V) + CAPPRE:ULCUL + FREQ:60HZ) + IDRY:Y

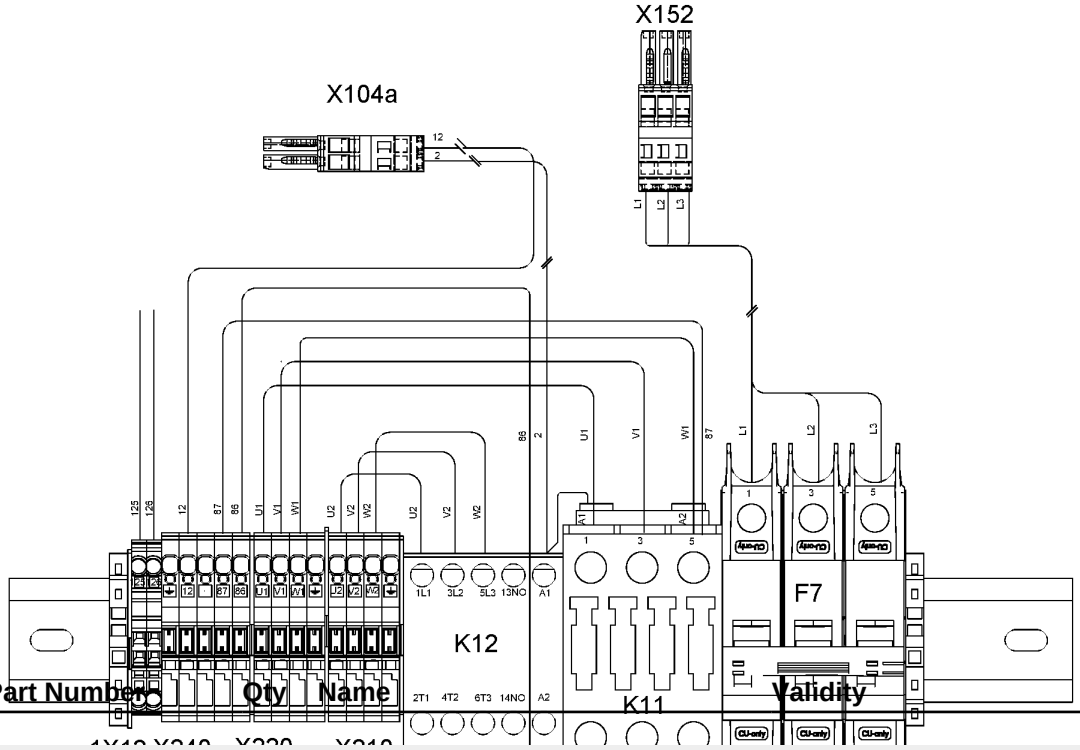

Ref	Part Number	Qty	Name	Validity	EL
•	9820 3000 22	-	SERVICE DIAGRAM	**(20/07/2017 - 27/08/2017)** (((((CAPPRM:AS1210 , CAPPRM:CE , CAPPRM:MHLW , CAPPRM:MOM) + MOVOL:400V , CAPPRM:CE + MOVOL:500V , CAPPRM:MHLW + MOVOL:200V) + FREQ:50HZ , (CAPPRM:ASME , CAPPRM:MHLW) + FREQ:60HZ + MOVOL:460V) + CAPPRE:IEC , (MOVOL:230V , MOVOL:460V , MOVOL:575V) + CAPPRE:ULCUL + CAPPRM:ASME + FREQ:60HZ) + (MODEL:GA110VP_16 , MODEL:GA90VP_16) , (CAPPRM:ASME + MOVOL:380V , CAPPRM:MHLW + MOVOL:200V) + CAPPRE:IEC + FREQ:60HZ + MODEL:GA75VP_16) + COOL:AIR **(28/08/2017 - 20/08/2018)** ((((CAPPRM:AS1210 , CAPPRM:CE , CAPPRM:MHLW , CAPPRM:MOM) + MOVOL:400V , CAPPRM:CE + MOVOL:500V , CAPPRM:MHLW + MOVOL:200V) + FREQ:50HZ , ((MODEL:GA75VP_16 + MOVOL:200V , MOVOL:460V) + CAPPRM:MHLW , (MODEL:GA75VP_16 + MOVOL:380V , MOVOL:460V) + CAPPRM:ASME) + FREQ:60HZ) + CAPPRE:IEC , (MOVOL:230V , MOVOL:460V , MOVOL:575V) + CAPPRE:ULCUL + CAPPRM:ASME + FREQ:60HZ) + COOL:AIR **(21/08/2018 - 10/12/2018)** (((CAPPRM:AS1210 , CAPPRM:CE , CAPPRM:MHLW , CAPPRM:MOM) + MOVOL:400V , (CAPPRM:CE + MOVOL:500V , CAPPRM:MHLW + MOVOL:200V) + COOL:AIR) + FREQ:50HZ , ((COOL:AIR + MODEL:GA75VP_16 + MOVOL:200V , MOVOL:460V) + CAPPRM:MHLW , (MODEL:GA75VP_16 + MOVOL:380V , MOVOL:460V) + CAPPRM:ASME) + FREQ:60HZ) + CAPPRE:IEC , ((MOVOL:230V , MOVOL:575V) + COOL:AIR , MOVOL:460V) + CAPPRE:ULCUL + CAPPRM:ASME + FREQ:60HZ **(11/12/2018 - 24/02/2019)** (((CAPPRM:AS1210 , CAPPRM:CE , CAPPRM:MHLW , CAPPRM:MOM) + MOVOL:400V , (CAPPRM:CE + MOVOL:500V ,	SD

20.14 - Dryer rail Without trafo on dryer

((((MOVOL:200V , MOVOL:380V) + MODEL:GA75VP_16 , MOVOL:460V) + FREQ:60HZ , (MOVOL:200V , MOVOL:400V , MOVOL:500V) + FREQ:50HZ) + CAPPRE:IEC , (MOVOL:230V , MOVOL:460V , MOVOL:575V) + CAPPRE:ULCUL + FREQ:60HZ) + IDRY:Y

Ref	Part Number	Qty	Name	Validity	EL
•	9820 3000 22	-	SERVICE DIAGRAM	**(25/02/2019 - 24/07/2019)** (((((MODEL:GA110VP_16 , MODEL:GA90VP_16) + CAPPRM:MHLW , CAPPRM:ASME) + MOVOL:460V , CAPPRM:ASME + MODEL:GA75VP_16 + MOVOL:380V) + FREQ:60HZ , (CAPPRM:AS1210 , CAPPRM:CE , CAPPRM:MHLW , CAPPRM:MOM) + FREQ:50HZ + MOVOL:400V) + CAPPRE:IEC , CAPPRE:ULCUL + CAPPRM:ASME + FREQ:60HZ + MOVOL:460V) + COOL:WATER **(25/07/2019 - 27/11/2019)** ((((MODEL:GA75VP_16 + MOVOL:380V , MOVOL:460V) + CAPPRM:ASME , CAPPRM:MHLW + MOVOL:460V) + FREQ:60HZ , (CAPPRM:AS1210 , CAPPRM:CE , CAPPRM:MHLW , CAPPRM:MOM) + FREQ:50HZ + MOVOL:400V) + CAPPRE:IEC , CAPPRE:ULCUL + CAPPRM:ASME + FREQ:60HZ + MOVOL:460V) + COOL:WATER **(28/11/2019 - 16/12/2019)** ((((MOVOL:230V , MOVOL:575V) + CAPPRE:ULCUL + CAPPRM:ASME , CAPPRE:IEC + CAPPRM:MHLW + MOVOL:200V) + FREQ:60HZ , (CAPPRM:CE + MOVOL:500V , CAPPRM:MHLW + MOVOL:200V) + CAPPRE:IEC + FREQ:50HZ) + COOL:AIR , CAPPRE:IEC + CAPPRM:ASME + FREQ:60HZ + MOVOL:380V) + MODEL:GA75VP_16 , ((CAPPRM:AS1210 , CAPPRM:CE , CAPPRM:MHLW , CAPPRM:MOM) + CAPPRE:IEC + FREQ:50HZ + MOVOL:400V , CAPPRE:ULCUL + CAPPRM:ASME + FREQ:60HZ + MOVOL:460V) + (COOL:AIR + MODEL:GA75VP_16 , COOL:WATER) , (CAPPRM:ASME , CAPPRM:MHLW) + CAPPRE:IEC + COOL:WATER + FREQ:60HZ + MOVOL:460V **(17/12/2019 - 04/02/2020)** (((CAPPRM:ASME , CAPPRM:MHLW) + MOVOL:460V , CAPPRM:ASME + MODEL:GA75VP_16 + MOVOL:380V) + COOL:WATER , ((MODEL:GA75VP_16 + MOVOL:200V , MODEL:GA90VP_16 + MOVOL:460V) + CAPPRM:MHLW , (MODEL:GA75VP_16 + MOVOL:380V , MODEL:GA90VP_16 + MOVOL:460V) + CAPPRM:ASME) + COOL:AIR) + CAPPRE:IEC + FREQ:60HZ , ((CAPPRM:AS1210 , CAPPRM:CE , CAPPRM:MHLW , CAPPRM:MOM) + CAPPRE:IEC + FREQ:50HZ + MOVOL:400V , CAPPRE:ULCUL + CAPPRM:ASME + FREQ:60HZ + MOVOL:460V) + ((MODEL:GA75VP_16 , MODEL:GA90VP_16) + COOL:AIR , COOL:WATER) , ((CAPPRM:CE + MOVOL:500V , CAPPRM:MHLW + MOVOL:200V) + CAPPRE:IEC + FREQ:50HZ , (MOVOL:230V , MOVOL:575V) + CAPPRE:ULCUL + CAPPRM:ASME + FREQ:60HZ) + (MODEL:GA75VP_16 , MODEL:GA90VP_16) + COOL:AIR **(05/02/2020 - ...)** ((((MODEL:GA75VP_16 , MODEL:GA90VP_16) + CAPPRM:MHLW + MOVOL:200V , CAPPRM:CE + MOVOL:500V) + COOL:AIR , (CAPPRM:AS1210 , CAPPRM:CE , CAPPRM:MHLW , CAPPRM:MOM) + MOVOL:400V) + FREQ:50HZ , ((CAPPRM:ASME , CAPPRM:MHLW) + (COOL:AIR + MODEL:GA90VP_16 , COOL:WATER) + MOVOL:460V , (CAPPRM:ASME + MOVOL:380V , CAPPRM:MHLW + COOL:AIR + MOVOL:200V) + MODEL:GA75VP_16) + FREQ:60HZ) + CAPPRE:IEC , (((MODEL:GA75VP_16 , MODEL:GA90VP_16) + MOVOL:230V , MOVOL:575V) + COOL:AIR , MOVOL:460V) + CAPPRE:ULCUL + CAPPRM:ASME + FREQ:60HZ	SD

Legend:

CAPPRE:IEC - Component approval electrical:IEC
CAPPRM:ASME - Component approval mechanical:ASME
CAPPRM:MOM - Component approval mechanical:MOM
FREQ:50HZ - Frequency:50 Hz
MODEL:GA110VP_16 - Model:GA 110VSD+
MOVOL:200V - Supply voltage:200 V
MOVOL:400V - Supply voltage:400 V
MOVOL:575V - Supply voltage:575 V

CAPPRE:ULCUL - Component approval electrical:UL/cUL
CAPPRM:CE - Component approval mechanical:CE
COOL:AIR - Cooling:Air cooled
FREQ:60HZ - Frequency:60 Hz
MODEL:GA75VP_16 - Model:GA 75VSD+
MOVOL:230V - Supply voltage:230 V
MOVOL:460V - Supply voltage:460 V

CAPPRM:AS1210 - Component approval mechanical:AS1210
CAPPRM:MHLW - Component approval mechanical:MHLW
COOL:WATER - Cooling:Water cooled
IDRY:Y - Integrated dryer:Yes
MODEL:GA90VP_16 - Model:GA 90VSD+
MOVOL:380V - Supply voltage:380 V
MOVOL:500V - Supply voltage:500 V

20.14 - Dryer rail Without trafo on dryer

((((MOVOL:200V , MOVOL:380V) + MODEL:GA75VP_16 , MOVOL:460V) + FREQ:60HZ , (MOVOL:200V , MOVOL:400V , MOVOL:500V) + FREQ:50HZ) + CAPPRE:IEC , (MOVOL:230V , MOVOL:460V , MOVOL:575V) + CAPPRE:ULCUL + FREQ:60HZ) + IDRY:Y

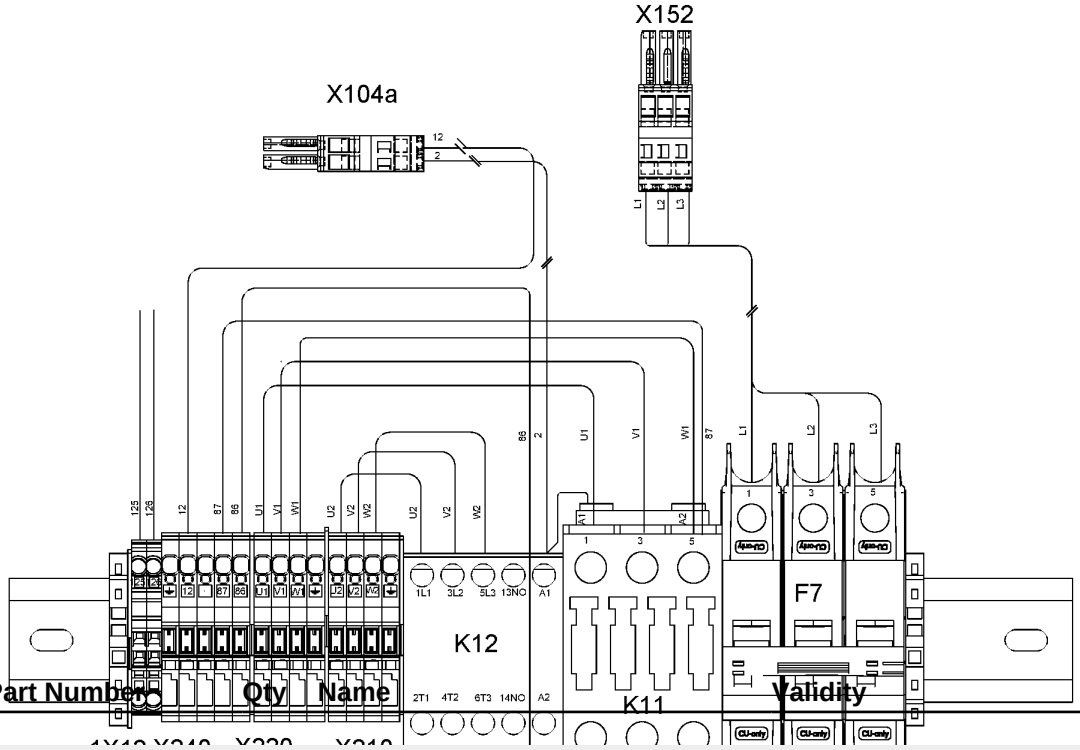

Ref	Part Number	Qty	Name	Validity	EL
•	9820 3000 24	-	ASSEMBLY DRAWING	**(20/07/2017 - 27/08/2017)** (((((CAPPRM:AS1210 , CAPPRM:CE , CAPPRM:MHLW , CAPPRM:MOM) + MOVOL:400V , CAPPRM:CE + MOVOL:500V , CAPPRM:MHLW + MOVOL:200V) + FREQ:50HZ , (CAPPRM:ASME , CAPPRM:MHLW) + FREQ:60HZ + MOVOL:460V) + CAPPRE:IEC , (MOVOL:230V , MOVOL:460V , MOVOL:575V) + CAPPRE:ULCUL + CAPPRM:ASME + FREQ:60HZ) + (MODEL:GA110VP_16 , MODEL:GA90VP_16) , (CAPPRM:ASME + MOVOL:380V , CAPPRM:MHLW + MOVOL:200V) + CAPPRE:IEC + FREQ:60HZ + MODEL:GA75VP_16) + COOL:AIR **(28/08/2017 - 20/08/2018)** ((((CAPPRM:AS1210 , CAPPRM:CE , CAPPRM:MHLW , CAPPRM:MOM) + MOVOL:400V , CAPPRM:CE + MOVOL:500V , CAPPRM:MHLW + MOVOL:200V) + FREQ:50HZ , ((MODEL:GA75VP_16 + MOVOL:200V , MOVOL:460V) + CAPPRM:MHLW , (MODEL:GA75VP_16 + MOVOL:380V , MOVOL:460V) + CAPPRM:ASME) + FREQ:60HZ) + CAPPRE:IEC , (MOVOL:230V , MOVOL:460V , MOVOL:575V) + CAPPRE:ULCUL + CAPPRM:ASME + FREQ:60HZ) + COOL:AIR **(21/08/2018 - 10/12/2018)** (((CAPPRM:AS1210 , CAPPRM:CE , CAPPRM:MHLW , CAPPRM:MOM) + MOVOL:400V , (CAPPRM:CE + MOVOL:500V , CAPPRM:MHLW + MOVOL:200V) + COOL:AIR) + FREQ:50HZ , ((COOL:AIR + MODEL:GA75VP_16 + MOVOL:200V , MOVOL:460V) + CAPPRM:MHLW , (MODEL:GA75VP_16 + MOVOL:380V , MOVOL:460V) + CAPPRM:ASME) + FREQ:60HZ) + CAPPRE:IEC , ((MOVOL:230V , MOVOL:575V) + COOL:AIR , MOVOL:460V) + CAPPRE:ULCUL + CAPPRM:ASME + FREQ:60HZ **(11/12/2018 - 24/02/2019)** (((CAPPRM:AS1210 , CAPPRM:CE , CAPPRM:MHLW , CAPPRM:MOM) + MOVOL:400V , (CAPPRM:CE + MOVOL:500V ,	AD

Ref	Part Number	Qty	Name	Validity	EL
•	9820 3000 24	-	ASSEMBLY DRAWING	**(25/02/2019 - 24/07/2019)** (((((MODEL:GA110VP_16 , MODEL:GA90VP_16) + CAPPRM:MHLW , CAPPRM:ASME) + MOVOL:460V , CAPPRM:ASME + MODEL:GA75VP_16 + MOVOL:380V) + FREQ:60HZ , (CAPPRM:AS1210 , CAPPRM:CE , CAPPRM:MHLW , CAPPRM:MOM) + FREQ:50HZ + MOVOL:400V) + CAPPRE:IEC , CAPPRE:ULCUL + CAPPRM:ASME + FREQ:60HZ + MOVOL:460V) + COOL:WATER **(25/07/2019 - 27/11/2019)** ((((MODEL:GA75VP_16 + MOVOL:380V , MOVOL:460V) + CAPPRM:ASME , CAPPRM:MHLW + MOVOL:460V) + FREQ:60HZ , (CAPPRM:AS1210 , CAPPRM:CE , CAPPRM:MHLW , CAPPRM:MOM) + FREQ:50HZ + MOVOL:400V) + CAPPRE:IEC , CAPPRE:ULCUL + CAPPRM:ASME + FREQ:60HZ + MOVOL:460V) + COOL:WATER **(28/11/2019 - 16/12/2019)** ((((MOVOL:230V , MOVOL:575V) + CAPPRE:ULCUL + CAPPRM:ASME , CAPPRE:IEC + CAPPRM:MHLW + MOVOL:200V) + FREQ:60HZ , (CAPPRM:CE + MOVOL:500V , CAPPRM:MHLW + MOVOL:200V) + CAPPRE:IEC + FREQ:50HZ) + COOL:AIR , CAPPRE:IEC + CAPPRM:ASME + FREQ:60HZ + MOVOL:380V) + MODEL:GA75VP_16 , ((CAPPRM:AS1210 , CAPPRM:CE , CAPPRM:MHLW , CAPPRM:MOM) + CAPPRE:IEC + FREQ:50HZ + MOVOL:400V , CAPPRE:ULCUL + CAPPRM:ASME + FREQ:60HZ + MOVOL:460V) + (COOL:AIR + MODEL:GA75VP_16 , COOL:WATER) , (CAPPRM:ASME , CAPPRM:MHLW) + CAPPRE:IEC + COOL:WATER + FREQ:60HZ + MOVOL:460V **(17/12/2019 - 04/02/2020)** (((CAPPRM:ASME , CAPPRM:MHLW) + MOVOL:460V , CAPPRM:ASME + MODEL:GA75VP_16 + MOVOL:380V) + COOL:WATER , ((MODEL:GA75VP_16 + MOVOL:200V , MODEL:GA90VP_16 + MOVOL:460V) + CAPPRM:MHLW , (MODEL:GA75VP_16 + MOVOL:380V , MODEL:GA90VP_16 + MOVOL:460V) + CAPPRM:ASME) + COOL:AIR) + CAPPRE:IEC + FREQ:60HZ , ((CAPPRM:AS1210 , CAPPRM:CE , CAPPRM:MHLW , CAPPRM:MOM) + CAPPRE:IEC + FREQ:50HZ + MOVOL:400V , CAPPRE:ULCUL + CAPPRM:ASME + FREQ:60HZ + MOVOL:460V) + ((MODEL:GA75VP_16 , MODEL:GA90VP_16) + COOL:AIR , COOL:WATER) , ((CAPPRM:CE + MOVOL:500V , CAPPRM:MHLW + MOVOL:200V) + CAPPRE:IEC + FREQ:50HZ , (MOVOL:230V , MOVOL:575V) + CAPPRE:ULCUL + CAPPRM:ASME + FREQ:60HZ) + (MODEL:GA75VP_16 , MODEL:GA90VP_16) + COOL:AIR **(05/02/2020 - ...)** ((((MODEL:GA75VP_16 , MODEL:GA90VP_16) + CAPPRM:MHLW + MOVOL:200V , CAPPRM:CE + MOVOL:500V) + COOL:AIR , (CAPPRM:AS1210 , CAPPRM:CE , CAPPRM:MHLW , CAPPRM:MOM) + MOVOL:400V) + FREQ:50HZ , ((CAPPRM:ASME , CAPPRM:MHLW) + (COOL:AIR + MODEL:GA90VP_16 , COOL:WATER) + MOVOL:460V , (CAPPRM:ASME + MOVOL:380V , CAPPRM:MHLW + COOL:AIR + MOVOL:200V) + MODEL:GA75VP_16) + FREQ:60HZ) + CAPPRE:IEC , (((MODEL:GA75VP_16 , MODEL:GA90VP_16) + MOVOL:230V , MOVOL:575V) + COOL:AIR , MOVOL:460V) + CAPPRE:ULCUL + CAPPRM:ASME + FREQ:60HZ	AD

Legend:

CAPPRE:IEC - Component approval electrical:IEC
CAPPRM:ASME - Component approval mechanical:ASME
CAPPRM:MOM - Component approval mechanical:MOM
FREQ:50HZ - Frequency:50 Hz
MODEL:GA110VP_16 - Model:GA 110VSD+
MOVOL:200V - Supply voltage:200 V
MOVOL:400V - Supply voltage:400 V
MOVOL:575V - Supply voltage:575 V
CAPPRE:ULCUL - Component approval electrical:UL/cUL
CAPPRM:CE - Component approval mechanical:CE
COOL:AIR - Cooling:Air cooled
FREQ:60HZ - Frequency:60 Hz
MODEL:GA75VP_16 - Model:GA 75VSD+
MOVOL:230V - Supply voltage:230 V
MOVOL:460V - Supply voltage:460 V
CAPPRM:AS1210 - Component approval mechanical:AS1210
CAPPRM:MHLW - Component approval mechanical:MHLW
COOL:WATER - Cooling:Water cooled
IDRY:Y - Integrated dryer:Yes
MODEL:GA90VP_16 - Model:GA 90VSD+
MOVOL:380V - Supply voltage:380 V
MOVOL:500V - Supply voltage:500 V

20.14 - Dryer rail Without trafo on dryer

((((MOVOL:200V , MOVOL:380V) + MODEL:GA75VP_16 , MOVOL:460V) + FREQ:60HZ , (MOVOL:200V , MOVOL:400V , MOVOL:500V) + FREQ:50HZ) + CAPPRE:IEC , (MOVOL:230V , MOVOL:460V , MOVOL:575V) + CAPPRE:ULCUL + FREQ:60HZ) + IDRY:Y

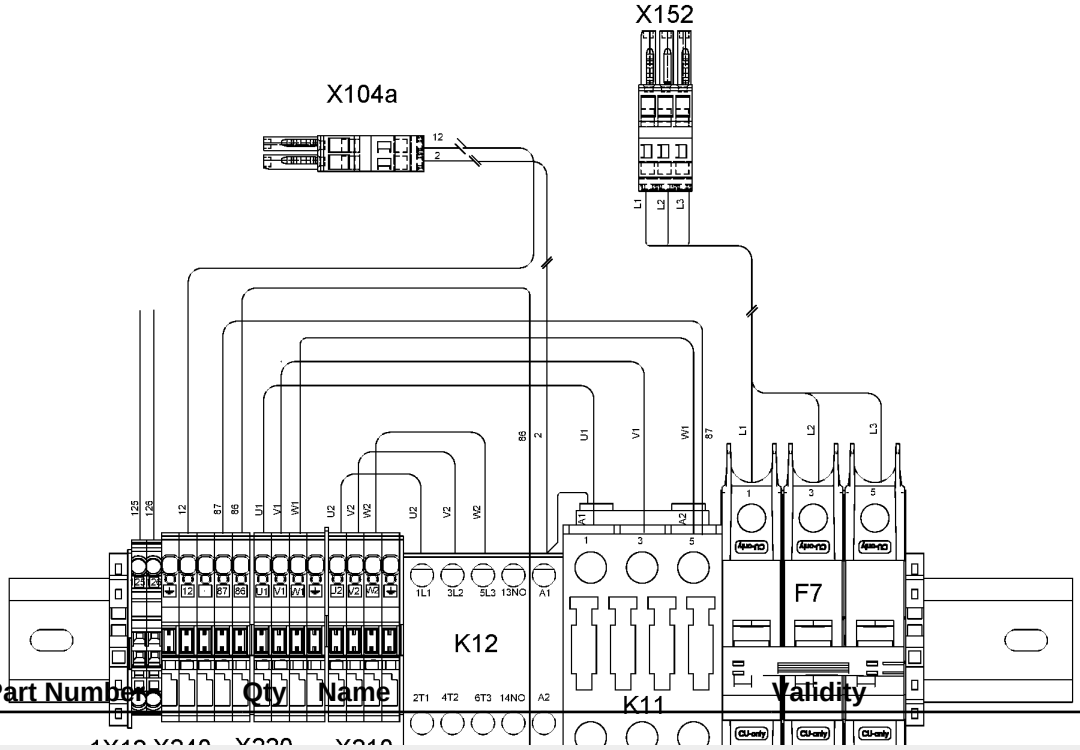

Ref	Part Number	Qty	Name	Validity	EL
•	0090 1400 02	AR	MOUNTING RAIL 35 X 15	**(20/07/2017 - 27/08/2017)** (((((CAPPRM:AS1210 , CAPPRM:CE , CAPPRM:MHLW , CAPPRM:MOM) + MOVOL:400V , CAPPRM:CE + MOVOL:500V , CAPPRM:MHLW + MOVOL:200V) + FREQ:50HZ , (CAPPRM:ASME , CAPPRM:MHLW) + FREQ:60HZ + MOVOL:460V) + CAPPRE:IEC , (MOVOL:230V , MOVOL:460V , MOVOL:575V) + CAPPRE:ULCUL + CAPPRM:ASME + FREQ:60HZ) + (MODEL:GA110VP_16 , MODEL:GA90VP_16) , (CAPPRM:ASME + MOVOL:380V , CAPPRM:MHLW + MOVOL:200V) + CAPPRE:IEC + FREQ:60HZ + MODEL:GA75VP_16) + COOL:AIR **(28/08/2017 - 20/08/2018)** ((((CAPPRM:AS1210 , CAPPRM:CE , CAPPRM:MHLW , CAPPRM:MOM) + MOVOL:400V , CAPPRM:CE + MOVOL:500V , CAPPRM:MHLW + MOVOL:200V) + FREQ:50HZ , ((MODEL:GA75VP_16 + MOVOL:200V , MOVOL:460V) + CAPPRM:MHLW , (MODEL:GA75VP_16 + MOVOL:380V , MOVOL:460V) + CAPPRM:ASME) + FREQ:60HZ) + CAPPRE:IEC , (MOVOL:230V , MOVOL:460V , MOVOL:575V) + CAPPRE:ULCUL + CAPPRM:ASME + FREQ:60HZ) + COOL:AIR **(21/08/2018 - 10/12/2018)** (((CAPPRM:AS1210 , CAPPRM:CE , CAPPRM:MHLW , CAPPRM:MOM) + MOVOL:400V , (CAPPRM:CE + MOVOL:500V , CAPPRM:MHLW + MOVOL:200V) + COOL:AIR) + FREQ:50HZ , ((COOL:AIR + MODEL:GA75VP_16 + MOVOL:200V , MOVOL:460V) + CAPPRM:MHLW , (MODEL:GA75VP_16 + MOVOL:380V , MOVOL:460V) + CAPPRM:ASME) + FREQ:60HZ) + CAPPRE:IEC , ((MOVOL:230V , MOVOL:575V) + COOL:AIR , MOVOL:460V) + CAPPRE:ULCUL + CAPPRM:ASME + FREQ:60HZ **(11/12/2018 - 24/02/2019)** (((CAPPRM:AS1210 , CAPPRM:CE , CAPPRM:MHLW , CAPPRM:MOM) + MOVOL:400V , (CAPPRM:CE + MOVOL:500V ,	L=300mm

20.14 - Dryer rail Without trafo on dryer

((((MOVOL:200V , MOVOL:380V) + MODEL:GA75VP_16 , MOVOL:460V) + FREQ:60HZ , (MOVOL:200V , MOVOL:400V , MOVOL:500V) + FREQ:50HZ) + CAPPRE:IEC , (MOVOL:230V , MOVOL:460V , MOVOL:575V) + CAPPRE:ULCUL + FREQ:60HZ) + IDRY:Y

Ref	Part Number	Qty	Name	Validity	EL
•	0090 1400 02	AR	MOUNTING RAIL 35 X 15	**(25/02/2019 - 24/07/2019)** (((((MODEL:GA110VP_16 , MODEL:GA90VP_16) + CAPPRM:MHLW , CAPPRM:ASME) + MOVOL:460V , CAPPRM:ASME + MODEL:GA75VP_16 + MOVOL:380V) + FREQ:60HZ , (CAPPRM:AS1210 , CAPPRM:CE , CAPPRM:MHLW , CAPPRM:MOM) + FREQ:50HZ + MOVOL:400V) + CAPPRE:IEC , CAPPRE:ULCUL + CAPPRM:ASME + FREQ:60HZ + MOVOL:460V) + COOL:WATER **(25/07/2019 - 27/11/2019)** ((((MODEL:GA75VP_16 + MOVOL:380V , MOVOL:460V) + CAPPRM:ASME , CAPPRM:MHLW + MOVOL:460V) + FREQ:60HZ , (CAPPRM:AS1210 , CAPPRM:CE , CAPPRM:MHLW , CAPPRM:MOM) + FREQ:50HZ + MOVOL:400V) + CAPPRE:IEC , CAPPRE:ULCUL + CAPPRM:ASME + FREQ:60HZ + MOVOL:460V) + COOL:WATER **(28/11/2019 - 16/12/2019)** ((((MOVOL:230V , MOVOL:575V) + CAPPRE:ULCUL + CAPPRM:ASME , CAPPRE:IEC + CAPPRM:MHLW + MOVOL:200V) + FREQ:60HZ , (CAPPRM:CE + MOVOL:500V , CAPPRM:MHLW + MOVOL:200V) + CAPPRE:IEC + FREQ:50HZ) + COOL:AIR , CAPPRE:IEC + CAPPRM:ASME + FREQ:60HZ + MOVOL:380V) + MODEL:GA75VP_16 , ((CAPPRM:AS1210 , CAPPRM:CE , CAPPRM:MHLW , CAPPRM:MOM) + CAPPRE:IEC + FREQ:50HZ + MOVOL:400V , CAPPRE:ULCUL + CAPPRM:ASME + FREQ:60HZ + MOVOL:460V) + (COOL:AIR + MODEL:GA75VP_16 , COOL:WATER) , (CAPPRM:ASME , CAPPRM:MHLW) + CAPPRE:IEC + COOL:WATER + FREQ:60HZ + MOVOL:460V **(17/12/2019 - 04/02/2020)** (((CAPPRM:ASME , CAPPRM:MHLW) + MOVOL:460V , CAPPRM:ASME + MODEL:GA75VP_16 + MOVOL:380V) + COOL:WATER , ((MODEL:GA75VP_16 + MOVOL:200V , MODEL:GA90VP_16 + MOVOL:460V) + CAPPRM:MHLW , (MODEL:GA75VP_16 + MOVOL:380V , MODEL:GA90VP_16 + MOVOL:460V) + CAPPRM:ASME) + COOL:AIR) + CAPPRE:IEC + FREQ:60HZ , ((CAPPRM:AS1210 , CAPPRM:CE , CAPPRM:MHLW , CAPPRM:MOM) + CAPPRE:IEC + FREQ:50HZ + MOVOL:400V , CAPPRE:ULCUL + CAPPRM:ASME + FREQ:60HZ + MOVOL:460V) + ((MODEL:GA75VP_16 , MODEL:GA90VP_16) + COOL:AIR , COOL:WATER) , ((CAPPRM:CE + MOVOL:500V , CAPPRM:MHLW + MOVOL:200V) + CAPPRE:IEC + FREQ:50HZ , (MOVOL:230V , MOVOL:575V) + CAPPRE:ULCUL + CAPPRM:ASME + FREQ:60HZ) + (MODEL:GA75VP_16 , MODEL:GA90VP_16) + COOL:AIR **(05/02/2020 - ...)** ((((MODEL:GA75VP_16 , MODEL:GA90VP_16) + CAPPRM:MHLW + MOVOL:200V , CAPPRM:CE + MOVOL:500V) + COOL:AIR , (CAPPRM:AS1210 , CAPPRM:CE , CAPPRM:MHLW , CAPPRM:MOM) + MOVOL:400V) + FREQ:50HZ , ((CAPPRM:ASME , CAPPRM:MHLW) + (COOL:AIR + MODEL:GA90VP_16 , COOL:WATER) + MOVOL:460V , (CAPPRM:ASME + MOVOL:380V , CAPPRM:MHLW + COOL:AIR + MOVOL:200V) + MODEL:GA75VP_16) + FREQ:60HZ) + CAPPRE:IEC , (((MODEL:GA75VP_16 , MODEL:GA90VP_16) + MOVOL:230V , MOVOL:575V) + COOL:AIR , MOVOL:460V) + CAPPRE:ULCUL + CAPPRM:ASME + FREQ:60HZ	L=300mm

Legend:

CAPPRE:IEC - Component approval electrical:IEC
CAPPRM:ASME - Component approval mechanical:ASME
CAPPRM:MOM - Component approval mechanical:MOM
FREQ:50HZ - Frequency:50 Hz
MODEL:GA110VP_16 - Model:GA 110VSD+
MOVOL:200V - Supply voltage:200 V
MOVOL:400V - Supply voltage:400 V
MOVOL:575V - Supply voltage:575 V

CAPPRE:ULCUL - Component approval electrical:UL/cUL
CAPPRM:CE - Component approval mechanical:CE
COOL:AIR - Cooling:Air cooled
FREQ:60HZ - Frequency:60 Hz
MODEL:GA75VP_16 - Model:GA 75VSD+
MOVOL:230V - Supply voltage:230 V
MOVOL:460V - Supply voltage:460 V

CAPPRM:AS1210 - Component approval mechanical:AS1210
CAPPRM:MHLW - Component approval mechanical:MHLW
COOL:WATER - Cooling:Water cooled
IDRY:Y - Integrated dryer:Yes
MODEL:GA90VP_16 - Model:GA 90VSD+
MOVOL:380V - Supply voltage:380 V
MOVOL:500V - Supply voltage:500 V

((((MOVOL:200V , MOVOL:380V) + MODEL:GA75VP_16 , MOVOL:460V) + FREQ:60HZ , (MOVOL:200V , MOVOL:400V , MOVOL:500V) + FREQ:50HZ) + CAPPRE:IEC , (MOVOL:230V , MOVOL:460V , MOVOL:575V) + CAPPRE:ULCUL + FREQ:60HZ) + IDRY:Y

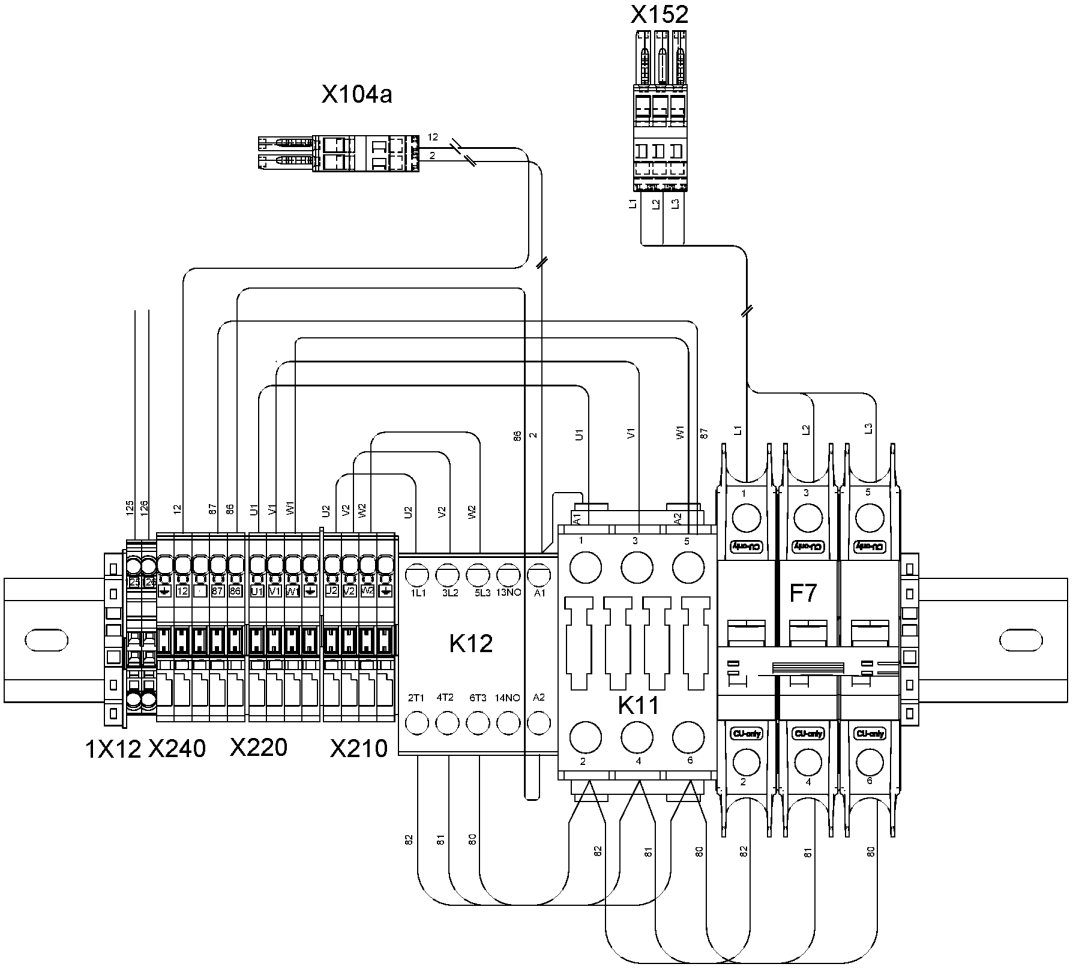

20.14 - Dryer rail Without trafo on dryer

((((MOVOL:200V , MOVOL:380V) + MODEL:GA75VP_16 , MOVOL:460V) + FREQ:60HZ , (MOVOL:200V , MOVOL:400V , MOVOL:500V) + FREQ:50HZ) + CAPPRE:IEC , (MOVOL:230V , MOVOL:460V , MOVOL:575V) + CAPPRE:ULCUL + FREQ:60HZ) + IDRY:Y

Ref	Part Number	Qty	Name	Validity	EL
•	1089 9522 27	1	CIRCUIT BREAKER		F7
•	1089 9602 93	1	CONTACTOR		K12
•	1089 0736 72	1	CONTACTOR		K11
•	1088 0039 34	2	TERMINAL		1X12
•	1088 0039 04	10	TERMINAL		
	Electrical legend:	X210 - X230 - X240			
•	1088 0039 03	3	TERMINAL		
	Electrical legend:	X210 - X230 - X240			
•	1088 0039 02	3	PLATE		
	Electrical legend:	X210 - X230 - X240			
•	1088 0037 99	7	PIN		
	Electrical legend:	X210:1-3 X220:1-2 X240:2-3-4			
•	1088 0039 26	1	CONNECTOR		
	Electrical legend:	X152 (remove coding pin 1,3)			
•	1088 0039 25	1	CONNECTOR		
	Electrical legend:	X104a (remove coding pin 1)			
•	0698 5140 71	1	CABLE GLAND		
	Electrical legend:	Loose supply - LAT sensor			
•	0697 9809 20	1	LOCKNUT		
	Electrical legend:	Loose supply - LAT sensor			

Legend:

CAPPRE:IEC - Component approval electrical:IEC
CAPPRE:ULCUL - Component approval electrical:UL/cUL
CAPPRM:AS1210 - Component approval mechanical:AS1210
CAPPRM:ASME - Component approval mechanical:ASME
CAPPRM:CE - Component approval mechanical:CE
CAPPRM:MHLW - Component approval mechanical:MHLW
CAPPRM:MOM - Component approval mechanical:MOM
COOL:AIR - Cooling:Air cooled
COOL:WATER - Cooling:Water cooled
FREQ:50HZ - Frequency:50 Hz
FREQ:60HZ - Frequency:60 Hz
IDRY:Y - Integrated dryer:Yes
MODEL:GA110VP_16 - Model:GA 110VSD+
MODEL:GA75VP_16 - Model:GA 75VSD+
MODEL:GA90VP_16 - Model:GA 90VSD+
MOVOL:200V - Supply voltage:200 V
MOVOL:230V - Supply voltage:230 V
MOVOL:380V - Supply voltage:380 V
MOVOL:400V - Supply voltage:400 V
MOVOL:460V - Supply voltage:460 V
MOVOL:500V - Supply voltage:500 V
MOVOL:575V - Supply voltage:575 V

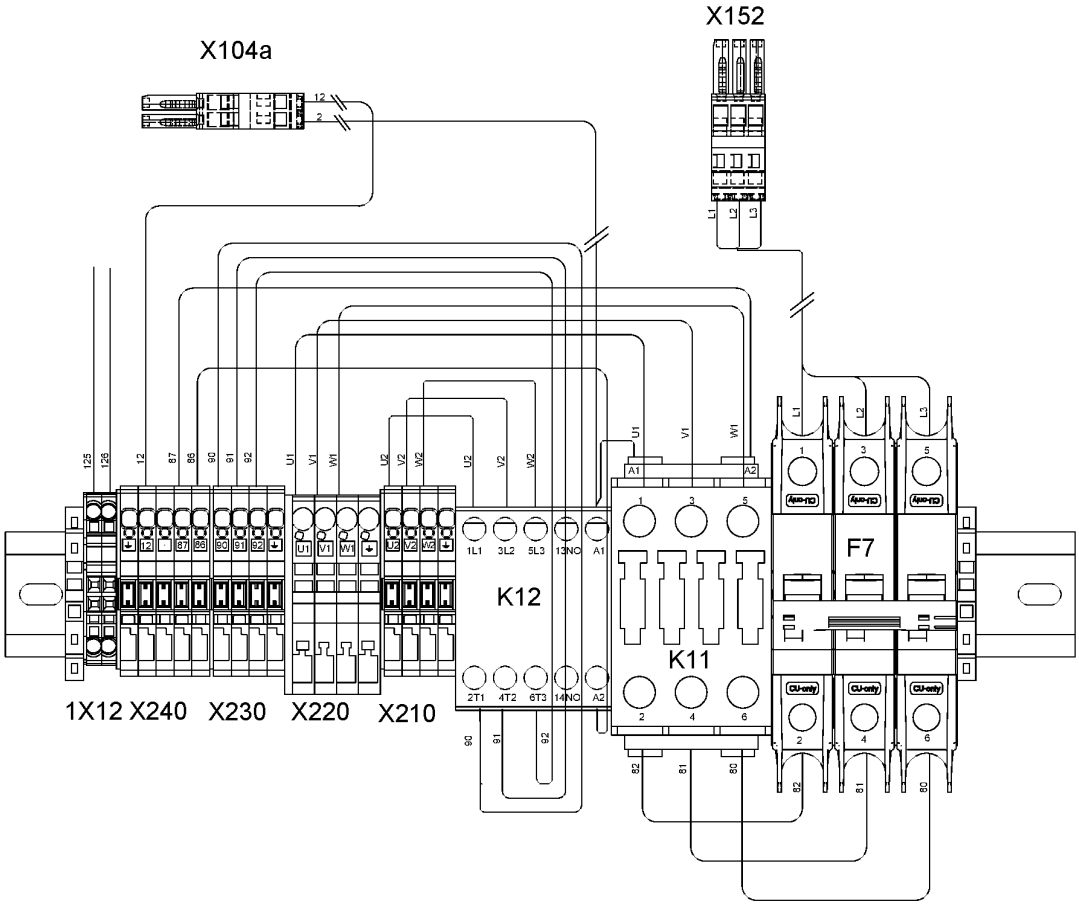
X104a
X152
K12
K11
F7
1X12 X240
X230
X220
X210

Ref	Part Number	Qty	Name	Validity	EL
	1900 2203 01	1	DRYER RAIL	**(20/07/2017 - 20/08/2018)** (CAPPRM:ASME + MOVOL:380V , CAPPRM:MHLW + MOVOL:200V) + COOL:AIR **(21/08/2018 - 30/12/2027)** (CAPPRM:ASME + MOVOL:380V , CAPPRM:MHLW + COOL:AIR + MOVOL:200V) **(31/12/2027 - ...)** (MODEL:GA110VP_16 , MODEL:GA90VP_16) + CAPPRM:ASME + MOVOL:380V , CAPPRM:MHLW + COOL:AIR + MODEL:GA90VP_16 + MOVOL:200V	
	Electrical legend:	With trafo on dryer			
	• 9820 3000 22	-	SERVICE DIAGRAM	**(20/07/2017 - 20/08/2018)** (CAPPRM:ASME + MOVOL:380V , CAPPRM:MHLW + MOVOL:200V) + COOL:AIR **(21/08/2018 - 24/02/2019)** (CAPPRM:ASME + MOVOL:380V , CAPPRM:MHLW + COOL:AIR + MOVOL:200V) **(25/02/2019 - 16/12/2019)** (CAPPRM:ASME + MOVOL:380V , CAPPRM:MHLW + MOVOL:200V) + COOL:AIR **(17/12/2019 - 04/02/2020)** (CAPPRM:ASME + MOVOL:380V , CAPPRM:MHLW + MOVOL:200V) + COOL:AIR + MODEL:GA110VP_16 **(05/02/2020 - 30/12/2027)** CAPPRM:MHLW + COOL:AIR + MODEL:GA110VP_16 + MOVOL:200V	SD
	• 9820 3000 22	-	SERVICE DIAGRAM	**(05/02/2020 - ...)** (MODEL:GA110VP_16 , MODEL:GA90VP_16) + CAPPRM:ASME + MOVOL:380V , CAPPRM:MHLW + COOL:AIR + MODEL:GA90VP_16 + MOVOL:200V **(17/12/2019 - 04/02/2020)** (COOL:WATER + MODEL:GA110VP_16 , MODEL:GA90VP_16) + CAPPRM:ASME + MOVOL:380V , CAPPRM:MHLW + COOL:AIR + MODEL:GA90VP_16 + MOVOL:200V **(25/02/2019 - 16/12/2019)** CAPPRM:ASME + COOL:WATER + MOVOL:380V	SD
	• 9820 3000 23	-	ASSEMBLY DRAWING	**(20/07/2017 - 20/08/2018)** (CAPPRM:ASME + MOVOL:380V , CAPPRM:MHLW + MOVOL:200V) + COOL:AIR **(21/08/2018 - 24/02/2019)** (CAPPRM:ASME + MOVOL:380V , CAPPRM:MHLW + COOL:AIR + MOVOL:200V) **(25/02/2019 - 16/12/2019)** (CAPPRM:ASME + MOVOL:380V , CAPPRM:MHLW + MOVOL:200V) + COOL:AIR **(17/12/2019 - 04/02/2020)** (CAPPRM:ASME + MOVOL:380V , CAPPRM:MHLW + MOVOL:200V) + COOL:AIR + MODEL:GA110VP_16 **(05/02/2020 - 30/12/2027)** CAPPRM:MHLW + COOL:AIR + MODEL:GA110VP_16 + MOVOL:200V	AD
	• 9820 3000 23	-	ASSEMBLY DRAWING	**(25/02/2019 - 16/12/2019)** CAPPRM:ASME + COOL:WATER + MOVOL:380V **(17/12/2019 - 04/02/2020)** (COOL:WATER + MODEL:GA110VP_16 , MODEL:GA90VP_16) + CAPPRM:ASME + MOVOL:380V , CAPPRM:MHLW + COOL:AIR + MODEL:GA90VP_16 + MOVOL:200V **(05/02/2020 - ...)** (MODEL:GA110VP_16 , MODEL:GA90VP_16) + CAPPRM:ASME + MOVOL:380V , CAPPRM:MHLW + COOL:AIR + MODEL:GA90VP_16 + MOVOL:200V	AD

Legend:

CAPPRE:IEC - Component approval electrical:IEC
COOL:AIR - Cooling:Air cooled
IDRY:Y - Integrated dryer:Yes
MOVOL:200V - Supply voltage:200 V
CAPPRM:ASME - Component approval mechanical:ASME
COOL:WATER - Cooling:Water cooled
MODEL:GA110VP_16 - Model:GA 110VSD+
MOVOL:380V - Supply voltage:380 V
CAPPRM:MHLW - Component approval mechanical:MHLW
FREQ:60HZ - Frequency:60 Hz
MODEL:GA90VP_16 - Model:GA 90VSD+

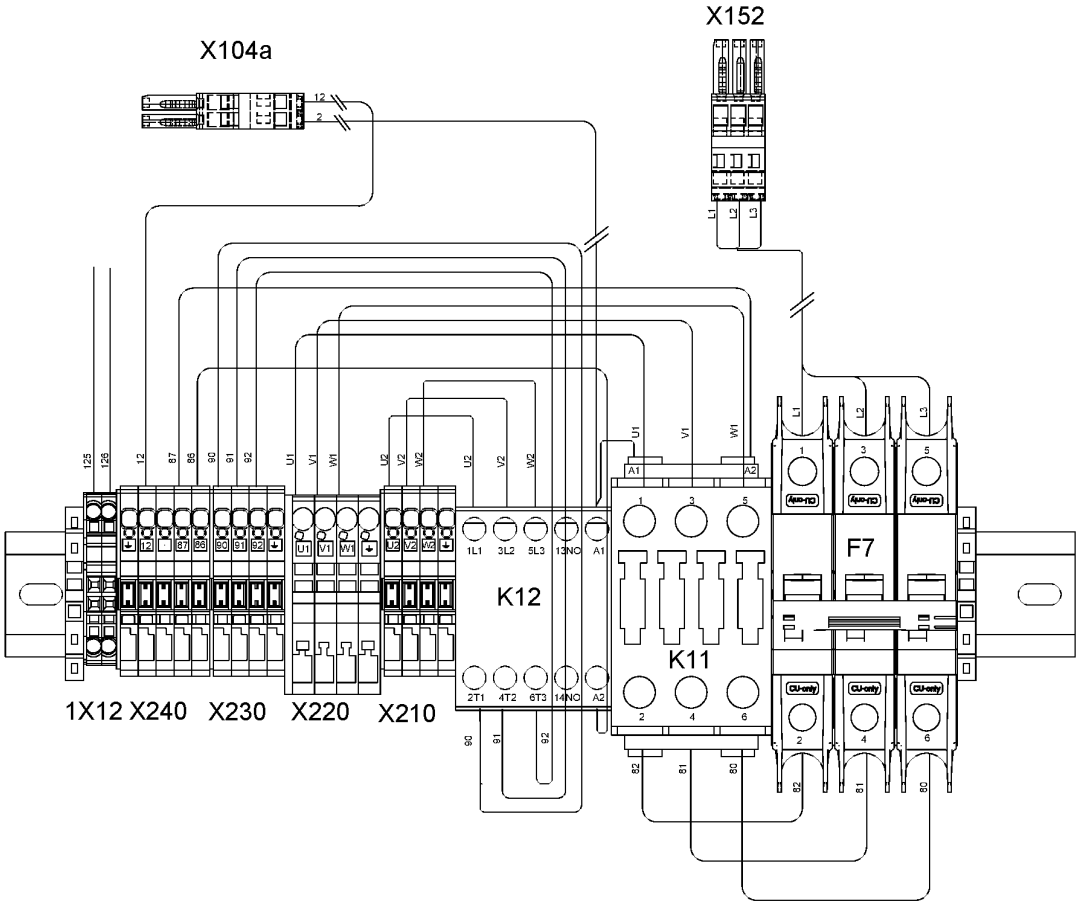
X152
X104a
K12
K11
F7
1X12 X240
X230
X220
X210

Ref	Part Number	Qty	Name	Validity	EL
	• 0090 1400 02	AR	MOUNTING RAIL 35 X 15	**(05/02/2020 - 30/12/2027)** CAPPRM:MHLW + COOL:AIR + MODEL:GA110VP_16 + MOVOL:200V **(17/12/2019 - 04/02/2020)** (CAPPRM:ASME + MOVOL:380V , CAPPRM:MHLW + MOVOL:200V) + COOL:AIR + MODEL:GA110VP_16 **(25/02/2019 - 16/12/2019)** (CAPPRM:ASME + MOVOL:380V , CAPPRM:MHLW + MOVOL:200V) + COOL:AIR **(21/08/2018 - 24/02/2019)** (CAPPRM:ASME + MOVOL:380V , CAPPRM:MHLW + COOL:AIR + MOVOL:200V) **(20/07/2017 - 20/08/2018)** (CAPPRM:ASME + MOVOL:380V , CAPPRM:MHLW + MOVOL:200V) + COOL:AIR	L=300mm
	• 0090 1400 02	AR	MOUNTING RAIL 35 X 15	**(25/02/2019 - 16/12/2019)** CAPPRM:ASME + COOL:WATER + MOVOL:380V **(17/12/2019 - 04/02/2020)** (COOL:WATER + MODEL:GA110VP_16 , MODEL:GA90VP_16) + CAPPRM:ASME + MOVOL:380V , CAPPRM:MHLW + COOL:AIR + MODEL:GA90VP_16 + MOVOL:200V **(05/02/2020 - ...)** (MODEL:GA110VP_16 , MODEL:GA90VP_16) + CAPPRM:ASME + MOVOL:380V , CAPPRM:MHLW + COOL:AIR + MODEL:GA90VP_16 + MOVOL:200V	L=300mm
	• 1089 9522 27	1	CIRCUIT BREAKER		F7
	• 1089 9602 93	1	CONTACTOR		K12
	• 1089 0736 72	1	CONTACTOR		K11
	• 1088 0039 34	2	TERMINAL		1X12
	• 1088 0039 04 **Electrical legend:**	10 X210 - X230 - X240	TERMINAL		
	• 1088 0039 03 **Electrical legend:**	3 X210 - X230 - X240	TERMINAL		
	• 1088 0039 02 **Electrical legend:**	3 X210 - X230 - X240	PLATE		
	• 1088 0037 99 **Electrical legend:**	7 X210:2-4 X230:2-3 X240:1-2-4	PIN		
	• 1089 9427 08	3	TERMINAL		X220
	• 1089 9427 42	1	TERMINAL		X220
	• 1089 9427 09	1	TERMINAL		X220
	• 1089 9427 15	2	KEY		X220:1,4
	• 1088 0039 26 **Electrical legend:**	1 X152 (remove coding pin 1,3)	CONNECTOR		
	• 1088 0039 25 **Electrical legend:**	1 X104a (remove coding pin 1)	CONNECTOR		
	• 0698 5140 71 **Electrical legend:**	1 Loose supply - LAT sensor	CABLE GLAND		
	• 0697 9809 20 **Electrical legend:**	1 Loose supply - LAT sensor	LOCKNUT		

Legend:

CAPPRE:IEC - Component approval electrical:IEC
CAPPRM:ASME - Component approval mechanical:ASME
CAPPRM:MHLW - Component approval mechanical:MHLW
COOL:AIR - Cooling:Air cooled
COOL:WATER - Cooling:Water cooled
FREQ:60HZ - Frequency:60 Hz
IDRY:Y - Integrated dryer:Yes
MODEL:GA110VP_16 - Model:GA 110VSD+
MODEL:GA90VP_16 - Model:GA 90VSD+
MOVOL:200V - Supply voltage:200 V
MOVOL:380V - Supply voltage:380 V

21.1 - Electrical components and cubicle assembly 380V-460V/60Hz, 400V/50Hz - Non trafo

((((CAPPRM:ASME , CAPPRM:MHLW) + (IDRY:N + MODEL:GA110VP_16 , MODEL:GA90VP_16) + MOVOL:460V , CAPPRM:ASME + MOVOL:380V) + FREQ:60HZ , (CAPPRM:AS1210 , CAPPRM:CE , CAPPRM:MHLW , CAPPRM:MOM) + FREQ:50HZ + MOVOL:400V) + CAPPRE:IEC , CAPPRE:ULCUL + CAPPRM:ASME + FREQ:60HZ + MOVOL:460V) + COOL:AIR

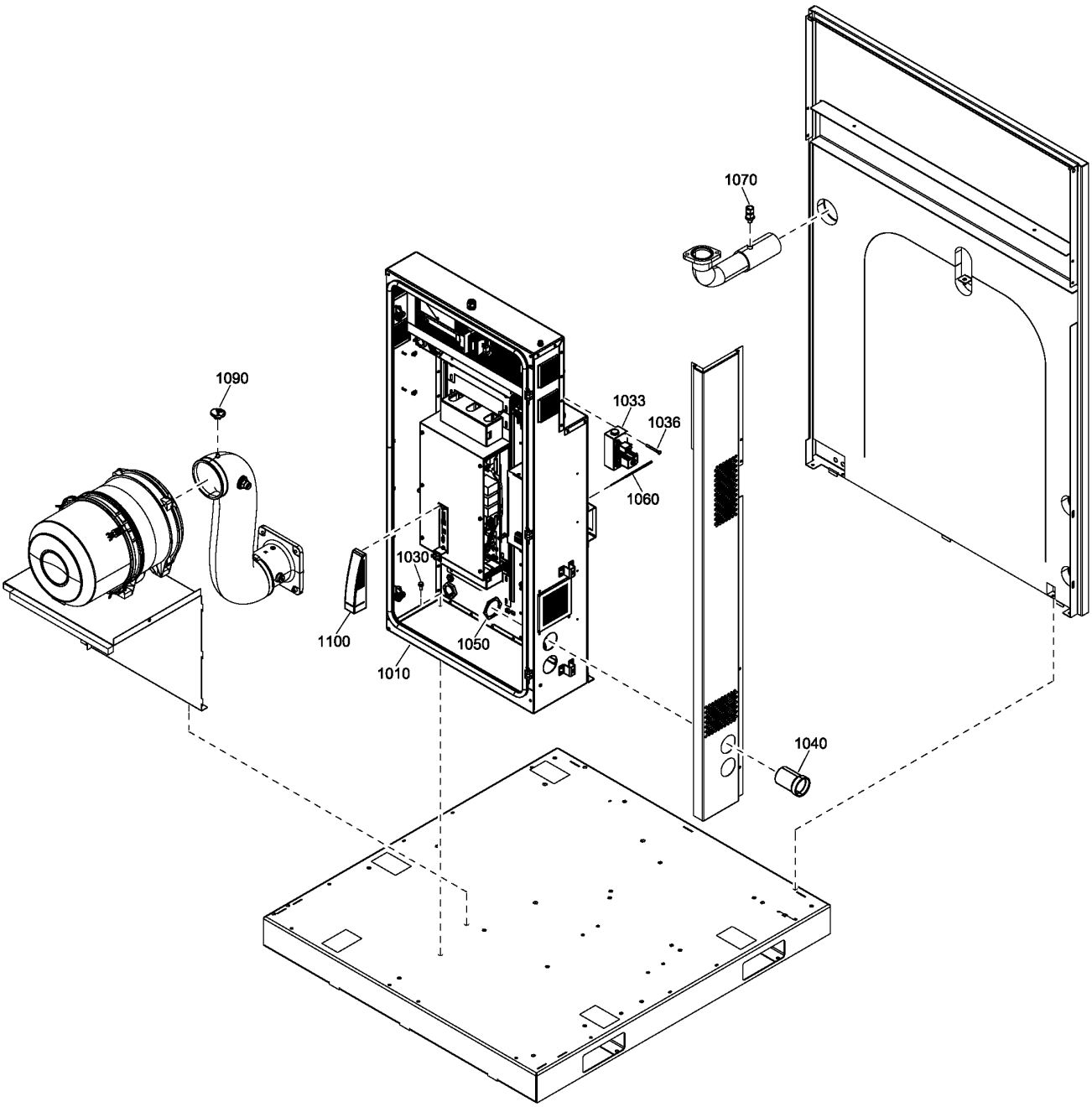

21.1 - Electrical components and cubicle assembly 380V-460V/60Hz, 400V/50Hz - Non trafo

((((CAPPRM:ASME , CAPPRM:MHLW) + (IDRY:N + MODEL:GA110VP_16 , MODEL:GA90VP_16) + MOVOL:460V , CAPPRM:ASME + MOVOL:380V) + FREQ:60HZ , (CAPPRM:AS1210 , CAPPRM:CE , CAPPRM:MHLW , CAPPRM:MOM) + FREQ:50HZ + MOVOL:400V) + CAPPRE:IEC , CAPPRE:ULCUL + CAPPRM:ASME + FREQ:60HZ + MOVOL:460V) + COOL:AIR

Ref	Part Number	Qty	Name	Validity
1010	-	1	CUBICLE	**(20/07/2017 - ...)**
1030	0147 1963 08	6	SCREW	**(06/07/2017 - 12/07/2017)** ((IDRY:N + MODEL:GA90VP_16 , MODEL:GA110VP_16 , MODEL:GA75VP_16) + CAPPRM:CE + FREQ:50HZ + MOVOL:400V , CAPPRM:ASME + FREQ:60HZ + IDRY:Y + MODEL:GA110VP_16 + MOVOL:380V) + CAPPRE:IEC , CAPPRE:ULCUL + CAPPRM:ASME + FREQ:60HZ + IDRY:N + MODEL:GA75VP_16 + MOVOL:460V **(13/07/2017 - 19/07/2017)** ((CAPPRE:IEC + CAPPRM:MHLW , CAPPRM:ASME) + IDRY:N + MODEL:GA75VP_16 + MOVOL:460V , CAPPRE:IEC + CAPPRM:ASME + IDRY:Y + MODEL:GA110VP_16 + MOVOL:380V) + FREQ:60HZ , (CAPPRM:AS1210 , CAPPRM:CE , CAPPRM:MHLW , CAPPRM:MOM) + (IDRY:N + MODEL:GA90VP_16 , MODEL:GA110VP_16 , MODEL:GA75VP_16) + CAPPRE:IEC + FREQ:50HZ + MOVOL:400V **(20/07/2017 - 20/08/2018)** ((((MOVOL:380V , MOVOL:460V) + CAPPRM:ASME , CAPPRM:MHLW + MOVOL:460V) + FREQ:60HZ , (CAPPRM:AS1210 , CAPPRM:CE , CAPPRM:MHLW , CAPPRM:MOM) + FREQ:50HZ + MOVOL:400V) + CAPPRE:IEC , CAPPRE:ULCUL + CAPPRM:ASME + FREQ:60HZ + MOVOL:460V) **(21/08/2018 - 10/12/2018)** (((MOVOL:380V , MOVOL:460V) + CAPPRM:ASME , CAPPRM:MHLW + MOVOL:460V) + FREQ:60HZ , (CAPPRM:AS1210 , CAPPRM:CE , CAPPRM:MHLW , CAPPRM:MOM) + FREQ:50HZ + MOVOL:400V) + CAPPRE:IEC , CAPPRE:ULCUL + CAPPRM:ASME + FREQ:60HZ + MOVOL:460V **(11/12/2018 - 24/02/2019)** ((((IDRY:N + MODEL:GA110VP_16 , MODEL:GA90VP_16) + COOL:AIR , COOL:WATER) + (CAPPRM:ASME , CAPPRM:MHLW) + MOVOL:460V , CAPPRM:ASME + MOVOL:380V) + FREQ:60HZ , (CAPPRM:AS1210 , CAPPRM:CE , CAPPRM:MHLW , CAPPRM:MOM) + FREQ:50HZ + MOVOL:400V) + CAPPRE:IEC , CAPPRE:ULCUL + CAPPRM:ASME + FREQ:60HZ + MOVOL:460V **(25/02/2019 - 24/07/2019)** ((((CAPPRM:ASME , CAPPRM:MHLW) + (IDRY:N + MODEL:GA110VP_16 , MODEL:GA90VP_16) + MOVOL:460V , CAPPRM:ASME + MOVOL:380V) + FREQ:60HZ , (CAPPRM:AS1210 , CAPPRM:CE , CAPPRM:MHLW , CAPPRM:MOM) + FREQ:50HZ + MOVOL:400V) + COOL:AIR , CAPPRM:MHLW + COOL:WATER + FREQ:60HZ + IDRY:Y + MODEL:GA75VP_16 + MOVOL:460V) + CAPPRE:IEC , CAPPRE:ULCUL + CAPPRM:ASME + COOL:AIR + FREQ:60HZ + MOVOL:460V **(25/07/2019 - ...)**
1033	1649 8003 91	1	SOLENOID BLOCK ASSEMBLY	**(20/07/2017 - 20/08/2018)** ((((MOVOL:380V , MOVOL:460V) + CAPPRM:ASME , CAPPRM:MHLW + MOVOL:460V) + FREQ:60HZ , (CAPPRM:AS1210 , CAPPRM:CE , CAPPRM:MHLW , CAPPRM:MOM) + FREQ:50HZ + MOVOL:400V) + CAPPRE:IEC , CAPPRE:ULCUL + CAPPRM:ASME + FREQ:60HZ + MOVOL:460V) **(21/08/2018 - 10/12/2018)** (((MOVOL:380V , MOVOL:460V) + CAPPRM:ASME , CAPPRM:MHLW + MOVOL:460V) + FREQ:60HZ , (CAPPRM:AS1210 , CAPPRM:CE , CAPPRM:MHLW , CAPPRM:MOM) + FREQ:50HZ + MOVOL:400V) + CAPPRE:IEC , CAPPRE:ULCUL + CAPPRM:ASME + FREQ:60HZ + MOVOL:460V **(11/12/2018 - 24/02/2019)** ((((IDRY:N + MODEL:GA110VP_16 , MODEL:GA90VP_16) + COOL:AIR , COOL:WATER) + (CAPPRM:ASME , CAPPRM:MHLW) + MOVOL:460V , CAPPRM:ASME + MOVOL:380V) + FREQ:60HZ , (CAPPRM:AS1210 , CAPPRM:CE , CAPPRM:MHLW , CAPPRM:MOM) + FREQ:50HZ + MOVOL:400V) + CAPPRE:IEC , CAPPRE:ULCUL + CAPPRM:ASME + FREQ:60HZ + MOVOL:460V **(25/02/2019 - 24/07/2019)** ((((CAPPRM:ASME , CAPPRM:MHLW) + (IDRY:N + MODEL:GA110VP_16 , MODEL:GA90VP_16) + MOVOL:460V , CAPPRM:ASME + MOVOL:380V) + FREQ:60HZ , (CAPPRM:AS1210 , CAPPRM:CE , CAPPRM:MHLW , CAPPRM:MOM) + FREQ:50HZ + MOVOL:400V) + COOL:AIR , CAPPRM:MHLW + COOL:WATER + FREQ:60HZ + IDRY:Y + MODEL:GA75VP_16 + MOVOL:460V) + CAPPRE:IEC , CAPPRE:ULCUL + CAPPRM:ASME + COOL:AIR + FREQ:60HZ + MOVOL:460V **(25/07/2019 - ...)**

Legend:

CAPPRE:IEC - Component approval electrical:IEC
CAPPRE:ULCUL - Component approval electrical:UL/cUL
CAPPRM:AS1210 - Component approval mechanical:AS1210
CAPPRM:ASME - Component approval mechanical:ASME
CAPPRM:CE - Component approval mechanical:CE
CAPPRM:MHLW - Component approval mechanical:MHLW
CAPPRM:MOM - Component approval mechanical:MOM
COOL:AIR - Cooling:Air cooled
COOL:WATER - Cooling:Water cooled
FREQ:50HZ - Frequency:50 Hz
FREQ:60HZ - Frequency:60 Hz
IDRY:N - Integrated dryer:No
IDRY:Y - Integrated dryer:Yes
MODEL:GA110VP_16 - Model:GA 110VSD+
MODEL:GA75VP_16 - Model:GA 75VSD+
MODEL:GA90VP_16 - Model:GA 90VSD+
MOVOL:380V - Supply voltage:380 V
MOVOL:400V - Supply voltage:400 V
MOVOL:460V - Supply voltage:460 V

21.1 - Electrical components and cubicle assembly 380V-460V/60Hz, 400V/50Hz - Non trafo

((((CAPPRM:ASME , CAPPRM:MHLW) + (IDRY:N + MODEL:GA110VP_16 , MODEL:GA90VP_16) + MOVOL:460V , CAPPRM:ASME + MOVOL:380V) + FREQ:60HZ , (CAPPRM:AS1210 , CAPPRM:CE , CAPPRM:MHLW , CAPPRM:MOM) + FREQ:50HZ + MOVOL:400V) + CAPPRE:IEC , CAPPRE:ULCUL + CAPPRM:ASME + FREQ:60HZ + MOVOL:460V) + COOL:AIR

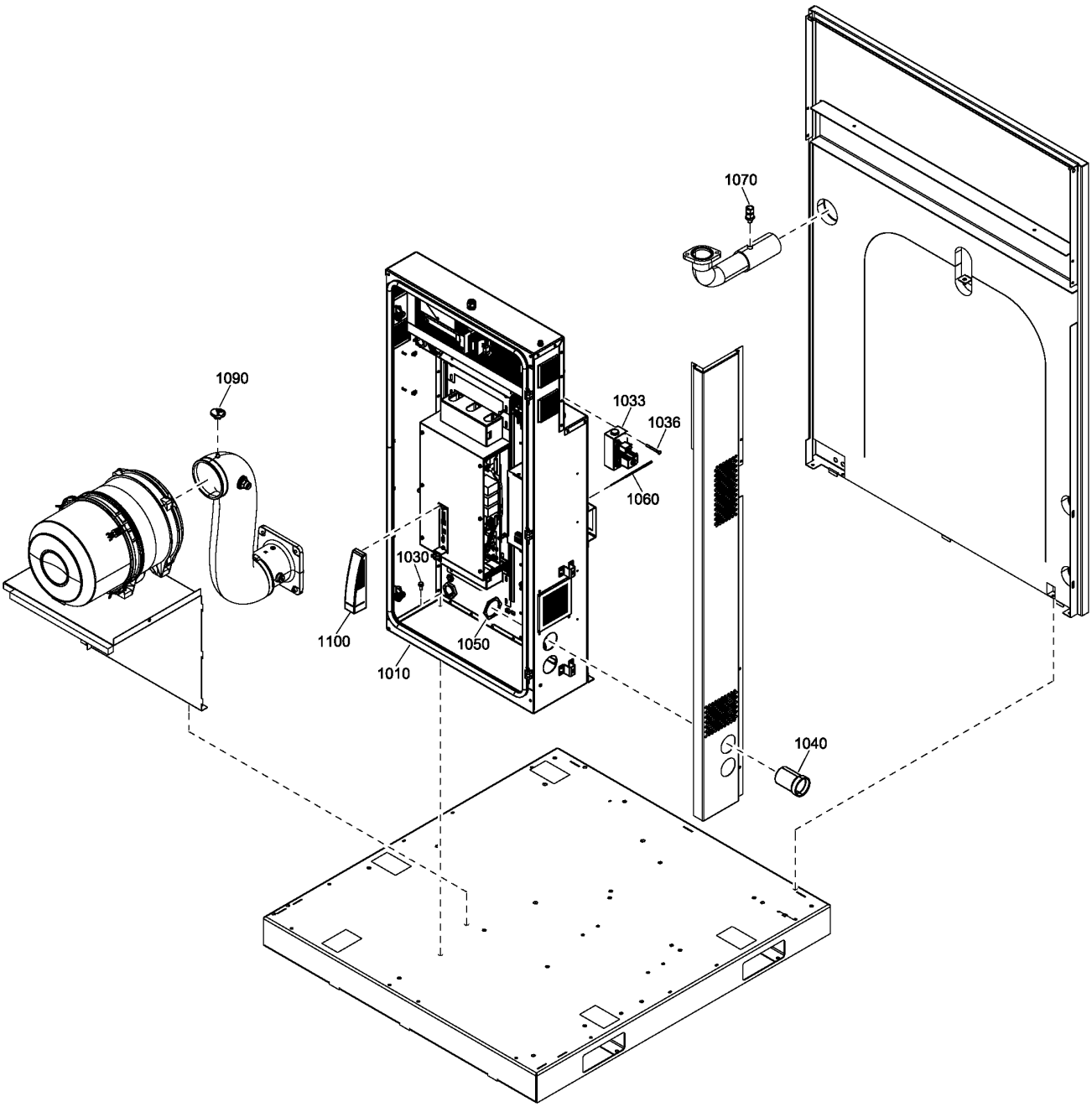

21.1 - Electrical components and cubicle assembly 380V-460V/60Hz, 400V/50Hz - Non trafo

((((CAPPRM:ASME , CAPPRM:MHLW) + (IDRY:N + MODEL:GA110VP_16 , MODEL:GA90VP_16) + MOVOL:460V , CAPPRM:ASME + MOVOL:380V) + FREQ:60HZ , (CAPPRM:AS1210 , CAPPRM:CE , CAPPRM:MHLW , CAPPRM:MOM) + FREQ:50HZ + MOVOL:400V) + CAPPRE:IEC , CAPPRE:ULCUL + CAPPRM:ASME + FREQ:60HZ + MOVOL:460V) + COOL:AIR

Ref	Part Number	Qty	Name	Validity
1036	0147 1256 03	4	HEXAGONAL BOLT	**(20/07/2017 - 20/08/2018)** ((((MOVOL:380V , MOVOL:460V) + CAPPRM:ASME , CAPPRM:MHLW + MOVOL:460V) + FREQ:60HZ , (CAPPRM:AS1210 , CAPPRM:CE , CAPPRM:MHLW , CAPPRM:MOM) + FREQ:50HZ + MOVOL:400V) + CAPPRE:IEC , CAPPRE:ULCUL + CAPPRM:ASME + FREQ:60HZ + MOVOL:460V) **(21/08/2018 - 10/12/2018)** (((MOVOL:380V , MOVOL:460V) + CAPPRM:ASME , CAPPRM:MHLW + MOVOL:460V) + FREQ:60HZ , (CAPPRM:AS1210 , CAPPRM:CE , CAPPRM:MHLW , CAPPRM:MOM) + FREQ:50HZ + MOVOL:400V) + CAPPRE:IEC , CAPPRE:ULCUL + CAPPRM:ASME + FREQ:60HZ + MOVOL:460V **(11/12/2018 - 24/02/2019)** ((((IDRY:N + MODEL:GA110VP_16 , MODEL:GA90VP_16) + COOL:AIR , COOL:WATER) + (CAPPRM:ASME , CAPPRM:MHLW) + MOVOL:460V , CAPPRM:ASME + MOVOL:380V) + FREQ:60HZ , (CAPPRM:AS1210 , CAPPRM:CE , CAPPRM:MHLW , CAPPRM:MOM) + FREQ:50HZ + MOVOL:400V) + CAPPRE:IEC , CAPPRE:ULCUL + CAPPRM:ASME + FREQ:60HZ + MOVOL:460V **(25/02/2019 - 24/07/2019)** ((((CAPPRM:ASME , CAPPRM:MHLW) + (IDRY:N + MODEL:GA110VP_16 , MODEL:GA90VP_16) + MOVOL:460V , CAPPRM:ASME + MOVOL:380V) + FREQ:60HZ , (CAPPRM:AS1210 , CAPPRM:CE , CAPPRM:MHLW , CAPPRM:MOM) + FREQ:50HZ + MOVOL:400V) + COOL:AIR , CAPPRM:MHLW + COOL:WATER + FREQ:60HZ + IDRY:Y + MODEL:GA75VP_16 + MOVOL:460V) + CAPPRE:IEC , CAPPRE:ULCUL + CAPPRM:ASME + COOL:AIR + FREQ:60HZ + MOVOL:460V **(25/07/2019 - ...)**
1040	1629 0314 23	2	ADAPTOR	**(06/07/2017 - 12/07/2017)** ((IDRY:N + MODEL:GA90VP_16 , MODEL:GA110VP_16 , MODEL:GA75VP_16) + CAPPRM:CE + FREQ:50HZ + MOVOL:400V , CAPPRM:ASME + FREQ:60HZ + IDRY:Y + MODEL:GA110VP_16 + MOVOL:380V) + CAPPRE:IEC , CAPPRE:ULCUL + CAPPRM:ASME + FREQ:60HZ + IDRY:N + MODEL:GA75VP_16 + MOVOL:460V **(13/07/2017 - 19/07/2017)** ((CAPPRE:IEC + CAPPRM:MHLW , CAPPRM:ASME) + IDRY:N + MODEL:GA75VP_16 + MOVOL:460V , CAPPRE:IEC + CAPPRM:ASME + IDRY:Y + MODEL:GA110VP_16 + MOVOL:380V) + FREQ:60HZ , (CAPPRM:AS1210 , CAPPRM:CE , CAPPRM:MHLW , CAPPRM:MOM) + (IDRY:N + MODEL:GA90VP_16 , MODEL:GA110VP_16 , MODEL:GA75VP_16) + CAPPRE:IEC + FREQ:50HZ + MOVOL:400V **(20/07/2017 - 20/08/2018)** ((((MOVOL:380V , MOVOL:460V) + CAPPRM:ASME , CAPPRM:MHLW + MOVOL:460V) + FREQ:60HZ , (CAPPRM:AS1210 , CAPPRM:CE , CAPPRM:MHLW , CAPPRM:MOM) + FREQ:50HZ + MOVOL:400V) + CAPPRE:IEC , CAPPRE:ULCUL + CAPPRM:ASME + FREQ:60HZ + MOVOL:460V) **(21/08/2018 - 10/12/2018)** (((MOVOL:380V , MOVOL:460V) + CAPPRM:ASME , CAPPRM:MHLW + MOVOL:460V) + FREQ:60HZ , (CAPPRM:AS1210 , CAPPRM:CE , CAPPRM:MHLW , CAPPRM:MOM) + FREQ:50HZ + MOVOL:400V) + CAPPRE:IEC , CAPPRE:ULCUL + CAPPRM:ASME + FREQ:60HZ + MOVOL:460V **(11/12/2018 - 24/02/2019)** ((((IDRY:N + MODEL:GA110VP_16 , MODEL:GA90VP_16) + COOL:AIR , COOL:WATER) + (CAPPRM:ASME , CAPPRM:MHLW) + MOVOL:460V , CAPPRM:ASME + MOVOL:380V) + FREQ:60HZ , (CAPPRM:AS1210 , CAPPRM:CE , CAPPRM:MHLW , CAPPRM:MOM) + FREQ:50HZ + MOVOL:400V) + CAPPRE:IEC , CAPPRE:ULCUL + CAPPRM:ASME + FREQ:60HZ + MOVOL:460V **(25/02/2019 - 24/07/2019)** ((((CAPPRM:ASME , CAPPRM:MHLW) + (IDRY:N + MODEL:GA110VP_16 , MODEL:GA90VP_16) + MOVOL:460V , CAPPRM:ASME + MOVOL:380V) + FREQ:60HZ , (CAPPRM:AS1210 , CAPPRM:CE , CAPPRM:MHLW , CAPPRM:MOM) + FREQ:50HZ + MOVOL:400V) + COOL:AIR , CAPPRM:MHLW + COOL:WATER + FREQ:60HZ + IDRY:Y + MODEL:GA75VP_16 + MOVOL:460V) + CAPPRE:IEC , CAPPRE:ULCUL + CAPPRM:ASME + COOL:AIR + FREQ:60HZ + MOVOL:460V **(25/07/2019 - ...)**

Legend:

CAPPRE:IEC - Component approval electrical:IEC
CAPPRM:ASME - Component approval mechanical:ASME
CAPPRM:MOM - Component approval mechanical:MOM
FREQ:50HZ - Frequency:50 Hz
IDRY:Y - Integrated dryer:Yes
MODEL:GA90VP_16 - Model:GA 90VSD+
MOVOL:460V - Supply voltage:460 V
CAPPRE:ULCUL - Component approval electrical:UL/cUL
CAPPRM:CE - Component approval mechanical:CE
COOL:AIR - Cooling:Air cooled
FREQ:60HZ - Frequency:60 Hz
MODEL:GA110VP_16 - Model:GA 110VSD+
MOVOL:380V - Supply voltage:380 V
CAPPRM:AS1210 - Component approval mechanical:AS1210
CAPPRM:MHLW - Component approval mechanical:MHLW
COOL:WATER - Cooling:Water cooled
IDRY:N - Integrated dryer:No
MODEL:GA75VP_16 - Model:GA 75VSD+
MOVOL:400V - Supply voltage:400 V

21.1 - Electrical components and cubicle assembly 380V-460V/60Hz, 400V/50Hz - Non trafo

((((CAPPRM:ASME , CAPPRM:MHLW) + (IDRY:N + MODEL:GA110VP_16 , MODEL:GA90VP_16) + MOVOL:460V , CAPPRM:ASME + MOVOL:380V) + FREQ:60HZ , (CAPPRM:AS1210 , CAPPRM:CE , CAPPRM:MHLW , CAPPRM:MOM) + FREQ:50HZ + MOVOL:400V) + CAPPRE:IEC , CAPPRE:ULCUL + CAPPRM:ASME + FREQ:60HZ + MOVOL:460V) + COOL:AIR

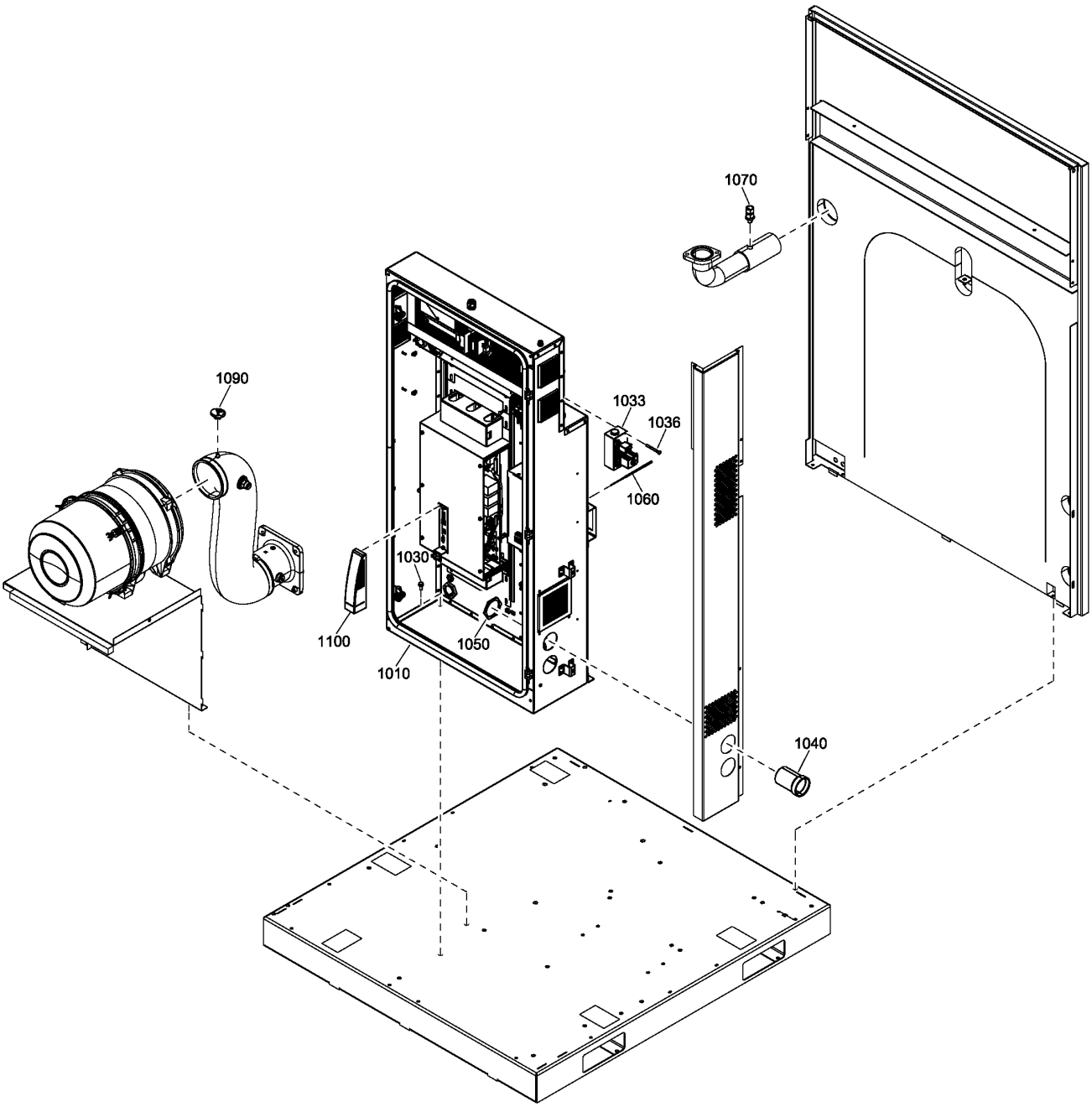

((((CAPPRM:ASME , CAPPRM:MHLW) + (IDRY:N + MODEL:GA110VP_16 , MODEL:GA90VP_16) + MOVOL:460V , CAPPRM:ASME + MOVOL:380V) + FREQ:60HZ , (CAPPRM:AS1210 , CAPPRM:CE , CAPPRM:MHLW , CAPPRM:MOM) + FREQ:50HZ + MOVOL:400V) + CAPPRE:IEC , CAPPRE:ULCUL + CAPPRM:ASME + FREQ:60HZ + MOVOL:460V) + COOL:AIR

Ref	Part Number	Qty	Name	Validity
1050	0697 9809 19	2	LOCKNUT	**(06/03/2017 - 12/07/2017)** ((IDRY:N + MODEL:GA90VP_16 , MODEL:GA110VP_16 , MODEL:GA75VP_16) + CAPPRM:CE + FREQ:50HZ + MOVOL:400V , CAPPRM:ASME + FREQ:60HZ + IDRY:Y + MODEL:GA110VP_16 + MOVOL:380V) + CAPPRE:IEC , CAPPRE:ULCUL + CAPPRM:ASME + FREQ:60HZ + IDRY:N + MODEL:GA75VP_16 + MOVOL:460V **(13/07/2017 - 19/07/2017)** ((CAPPRE:IEC + CAPPRM:MHLW , CAPPRM:ASME) + IDRY:N + MODEL:GA75VP_16 + MOVOL:460V , CAPPRE:IEC + CAPPRM:ASME + IDRY:Y + MODEL:GA110VP_16 + MOVOL:380V) + FREQ:60HZ , (CAPPRM:AS1210 , CAPPRM:CE , CAPPRM:MHLW , CAPPRM:MOM) + (IDRY:N + MODEL:GA90VP_16 , MODEL:GA110VP_16 , MODEL:GA75VP_16) + CAPPRE:IEC + FREQ:50HZ + MOVOL:400V **(20/07/2017 - 20/08/2018)** ((((MOVOL:380V , MOVOL:460V) + CAPPRM:ASME , CAPPRM:MHLW + MOVOL:460V) + FREQ:60HZ , (CAPPRM:AS1210 , CAPPRM:CE , CAPPRM:MHLW , CAPPRM:MOM) + FREQ:50HZ + MOVOL:400V) + CAPPRE:IEC , CAPPRE:ULCUL + CAPPRM:ASME + FREQ:60HZ + MOVOL:460V) **(21/08/2018 - 10/12/2018)** (((MOVOL:380V , MOVOL:460V) + CAPPRM:ASME , CAPPRM:MHLW + MOVOL:460V) + FREQ:60HZ , (CAPPRM:AS1210 , CAPPRM:CE , CAPPRM:MHLW , CAPPRM:MOM) + FREQ:50HZ + MOVOL:400V) + CAPPRE:IEC , CAPPRE:ULCUL + CAPPRM:ASME + FREQ:60HZ + MOVOL:460V **(11/12/2018 - 24/02/2019)** ((((IDRY:N + MODEL:GA110VP_16 , MODEL:GA90VP_16) + COOL:AIR , COOL:WATER) + (CAPPRM:ASME , CAPPRM:MHLW) + MOVOL:460V , CAPPRM:ASME + MOVOL:380V) + FREQ:60HZ , (CAPPRM:AS1210 , CAPPRM:CE , CAPPRM:MHLW , CAPPRM:MOM) + FREQ:50HZ + MOVOL:400V) + CAPPRE:IEC , CAPPRE:ULCUL + CAPPRM:ASME + FREQ:60HZ + MOVOL:460V **(25/02/2019 - 24/07/2019)** ((((CAPPRM:ASME , CAPPRM:MHLW) + (IDRY:N + MODEL:GA110VP_16 , MODEL:GA90VP_16) + MOVOL:460V , CAPPRM:ASME + MOVOL:380V) + FREQ:60HZ , (CAPPRM:AS1210 , CAPPRM:CE , CAPPRM:MHLW , CAPPRM:MOM) + FREQ:50HZ + MOVOL:400V) + COOL:AIR , CAPPRM:MHLW + COOL:WATER + FREQ:60HZ + IDRY:Y + MODEL:GA75VP_16 + MOVOL:460V) + CAPPRE:IEC , CAPPRE:ULCUL + CAPPRM:ASME + COOL:AIR + FREQ:60HZ + MOVOL:460V **(25/07/2019 - ...)**
1060	1089 0708 12	1	THERMOMETER PT1000	**(06/07/2017 - 12/07/2017)** ((IDRY:N + MODEL:GA90VP_16 , MODEL:GA110VP_16 , MODEL:GA75VP_16) + CAPPRM:CE + FREQ:50HZ + MOVOL:400V , CAPPRM:ASME + FREQ:60HZ + IDRY:Y + MODEL:GA110VP_16 + MOVOL:380V) + CAPPRE:IEC , CAPPRE:ULCUL + CAPPRM:ASME + FREQ:60HZ + IDRY:N + MODEL:GA75VP_16 + MOVOL:460V **(13/07/2017 - 19/07/2017)** ((CAPPRE:IEC + CAPPRM:MHLW , CAPPRM:ASME) + IDRY:N + MODEL:GA75VP_16 + MOVOL:460V , CAPPRE:IEC + CAPPRM:ASME + IDRY:Y + MODEL:GA110VP_16 + MOVOL:380V) + FREQ:60HZ , (CAPPRM:AS1210 , CAPPRM:CE , CAPPRM:MHLW , CAPPRM:MOM) + (IDRY:N + MODEL:GA90VP_16 , MODEL:GA110VP_16 , MODEL:GA75VP_16) + CAPPRE:IEC + FREQ:50HZ + MOVOL:400V **(20/07/2017 - 18/04/2018)** ((((MOVOL:380V , MOVOL:460V) + CAPPRM:ASME , CAPPRM:MHLW + MOVOL:460V) + FREQ:60HZ , (CAPPRM:AS1210 , CAPPRM:CE , CAPPRM:MHLW , CAPPRM:MOM) + FREQ:50HZ + MOVOL:400V) + CAPPRE:IEC , CAPPRE:ULCUL + CAPPRM:ASME + FREQ:60HZ + MOVOL:460V)

Legend:

CAPPRE:IEC - Component approval electrical:IEC
CAPPRM:ASME - Component approval mechanical:ASME
CAPPRM:MOM - Component approval mechanical:MOM
FREQ:50HZ - Frequency:50 Hz
IDRY:Y - Integrated dryer:Yes
MODEL:GA90VP_16 - Model:GA 90VSD+
MOVOL:460V - Supply voltage:460 V
CAPPRE:ULCUL - Component approval electrical:UL/cUL
CAPPRM:CE - Component approval mechanical:CE
COOL:AIR - Cooling:Air cooled
FREQ:60HZ - Frequency:60 Hz
MODEL:GA110VP_16 - Model:GA 110VSD+
MOVOL:380V - Supply voltage:380 V
CAPPRM:AS1210 - Component approval mechanical:AS1210
CAPPRM:MHLW - Component approval mechanical:MHLW
COOL:WATER - Cooling:Water cooled
IDRY:N - Integrated dryer:No
MODEL:GA75VP_16 - Model:GA 75VSD+
MOVOL:400V - Supply voltage:400 V

21.1 - Electrical components and cubicle assembly 380V-460V/60Hz, 400V/50Hz - Non trafo

((((CAPPRM:ASME , CAPPRM:MHLW) + (IDRY:N + MODEL:GA110VP_16 , MODEL:GA90VP_16) + MOVOL:460V , CAPPRM:ASME + MOVOL:380V) + FREQ:60HZ , (CAPPRM:AS1210 , CAPPRM:CE , CAPPRM:MHLW , CAPPRM:MOM) + FREQ:50HZ + MOVOL:400V) + CAPPRE:IEC , CAPPRE:ULCUL + CAPPRM:ASME + FREQ:60HZ + MOVOL:460V) + COOL:AIR

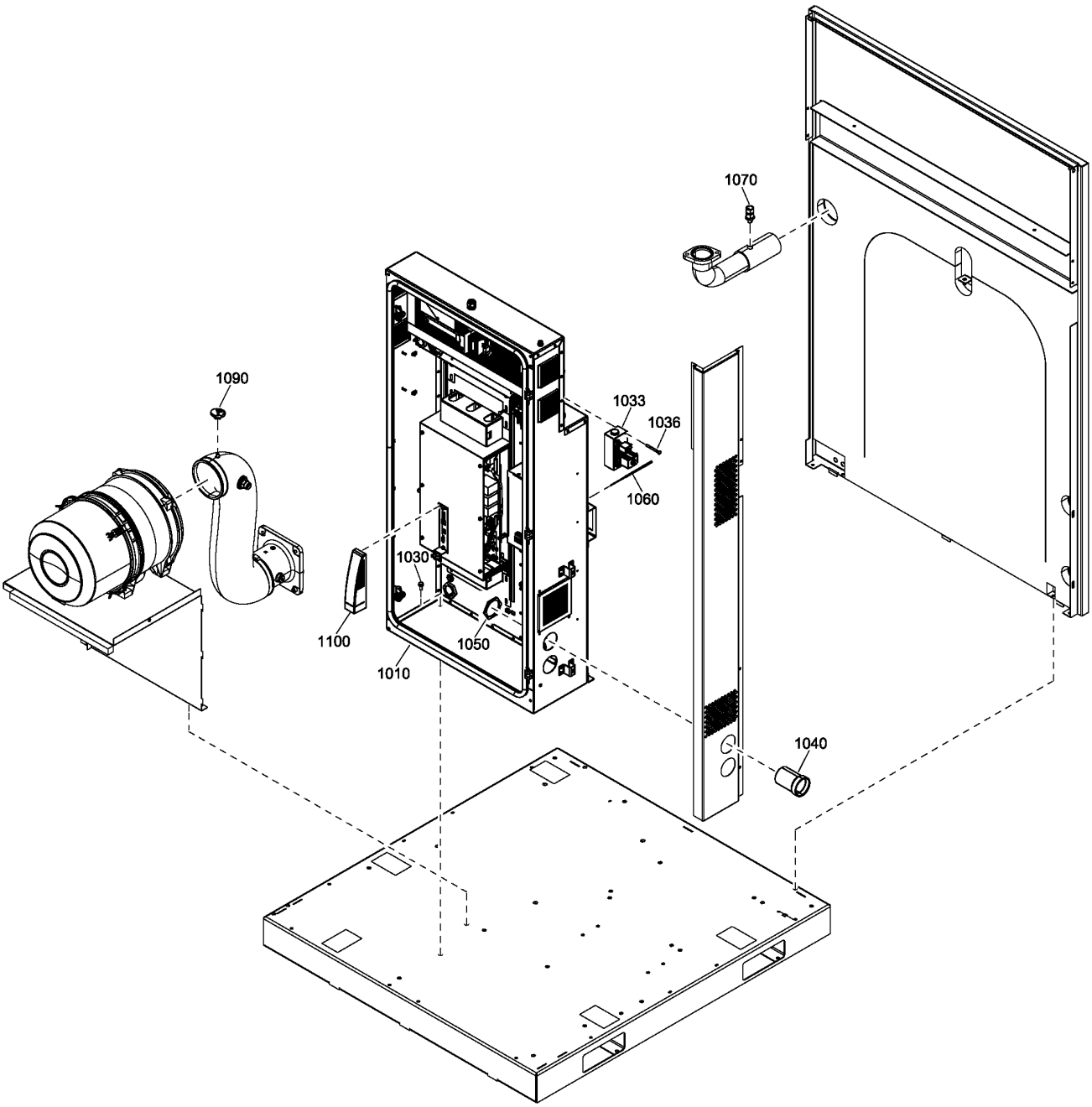

21.1 - Electrical components and cubicle assembly 380V-460V/60Hz, 400V/50Hz - Non trafo

((((CAPPRM:ASME , CAPPRM:MHLW) + (IDRY:N + MODEL:GA110VP_16 , MODEL:GA90VP_16) + MOVOL:460V , CAPPRM:ASME + MOVOL:380V) + FREQ:60HZ , (CAPPRM:AS1210 , CAPPRM:CE , CAPPRM:MHLW , CAPPRM:MOM) + FREQ:50HZ + MOVOL:400V) + CAPPRE:IEC , CAPPRE:ULCUL + CAPPRM:ASME + FREQ:60HZ + MOVOL:460V) + COOL:AIR

Ref	Part Number	Qty	Name	Validity
1070	1089 0575 54	1	PRESSURE TRANSDUCER	**(05/05/2017 - 12/07/2017)** ((IDRY:N + MODEL:GA90VP_16 , MODEL:GA110VP_16 , MODEL:GA75VP_16) + CAPPRM:CE + FREQ:50HZ + MOVOL:400V , CAPPRM:ASME + FREQ:60HZ + IDRY:Y + MODEL:GA110VP_16 + MOVOL:380V) + CAPPRE:IEC , CAPPRE:ULCUL + CAPPRM:ASME + FREQ:60HZ + IDRY:N + MODEL:GA75VP_16 + MOVOL:460V **(13/07/2017 - 19/07/2017)** ((CAPPRE:IEC + CAPPRM:MHLW , CAPPRM:ASME) + IDRY:N + MODEL:GA75VP_16 + MOVOL:460V , CAPPRE:IEC + CAPPRM:ASME + IDRY:Y + MODEL:GA110VP_16 + MOVOL:380V) + FREQ:60HZ , (CAPPRM:AS1210 , CAPPRM:CE , CAPPRM:MHLW , CAPPRM:MOM) + (IDRY:N + MODEL:GA90VP_16 , MODEL:GA110VP_16 , MODEL:GA75VP_16) + CAPPRE:IEC + FREQ:50HZ + MOVOL:400V **(20/07/2017 - 20/08/2018)** ((((MOVOL:380V , MOVOL:460V) + CAPPRM:ASME , CAPPRM:MHLW + MOVOL:460V) + FREQ:60HZ , (CAPPRM:AS1210 , CAPPRM:CE , CAPPRM:MHLW , CAPPRM:MOM) + FREQ:50HZ + MOVOL:400V) + CAPPRE:IEC , CAPPRE:ULCUL + CAPPRM:ASME + FREQ:60HZ + MOVOL:460V) **(21/08/2018 - 10/12/2018)** (((MOVOL:380V , MOVOL:460V) + CAPPRM:ASME , CAPPRM:MHLW + MOVOL:460V) + FREQ:60HZ , (CAPPRM:AS1210 , CAPPRM:CE , CAPPRM:MHLW , CAPPRM:MOM) + FREQ:50HZ + MOVOL:400V) + CAPPRE:IEC , CAPPRE:ULCUL + CAPPRM:ASME + FREQ:60HZ + MOVOL:460V **(11/12/2018 - 24/02/2019)** (((((IDRY:N + MODEL:GA110VP_16 , MODEL:GA90VP_16) + COOL:AIR , COOL:WATER) + (CAPPRM:ASME , CAPPRM:MHLW) + MOVOL:460V , CAPPRM:ASME + MOVOL:380V) + FREQ:60HZ , (CAPPRM:AS1210 , CAPPRM:CE , CAPPRM:MHLW , CAPPRM:MOM) + FREQ:50HZ + MOVOL:400V) + CAPPRE:IEC , CAPPRE:ULCUL + CAPPRM:ASME + FREQ:60HZ + MOVOL:460V **(25/02/2019 - 24/07/2019)** ((((CAPPRM:ASME , CAPPRM:MHLW) + (IDRY:N + MODEL:GA110VP_16 , MODEL:GA90VP_16) + MOVOL:460V , CAPPRM:ASME + MOVOL:380V) + FREQ:60HZ , (CAPPRM:AS1210 , CAPPRM:CE , CAPPRM:MHLW , CAPPRM:MOM) + FREQ:50HZ + MOVOL:400V) + COOL:AIR , CAPPRM:MHLW + COOL:WATER + FREQ:60HZ + IDRY:Y + MODEL:GA75VP_16 + MOVOL:460V) + CAPPRE:IEC , CAPPRE:ULCUL + CAPPRM:ASME + COOL:AIR + FREQ:60HZ + MOVOL:460V **(25/07/2019 - ...)**
1090	1089 0607 11	1	WARNING DEVICE	**(15/12/2017 - 01/02/2018)** CAPPRE:IEC + CAPPRM:ASME + FREQ:60HZ + IDRY:Y + MOVOL:380V **(02/02/2018 - 20/08/2018)** ((((MOVOL:380V , MOVOL:460V) + CAPPRM:ASME , CAPPRM:MHLW + MOVOL:460V) + FREQ:60HZ , (CAPPRM:AS1210 , CAPPRM:CE , CAPPRM:MHLW , CAPPRM:MOM) + FREQ:50HZ + MOVOL:400V) + CAPPRE:IEC , CAPPRE:ULCUL + CAPPRM:ASME + FREQ:60HZ + MOVOL:460V) **(21/08/2018 - 10/12/2018)** (((MOVOL:380V , MOVOL:460V) + CAPPRM:ASME , CAPPRM:MHLW + MOVOL:460V) + FREQ:60HZ , (CAPPRM:AS1210 , CAPPRM:CE , CAPPRM:MHLW , CAPPRM:MOM) + FREQ:50HZ + MOVOL:400V) + CAPPRE:IEC , CAPPRE:ULCUL + CAPPRM:ASME + FREQ:60HZ + MOVOL:460V **(11/12/2018 - 24/02/2019)** (((((IDRY:N + MODEL:GA110VP_16 , MODEL:GA90VP_16) + COOL:AIR , COOL:WATER) + (CAPPRM:ASME , CAPPRM:MHLW) + MOVOL:460V , CAPPRM:ASME + MOVOL:380V) + FREQ:60HZ , (CAPPRM:AS1210 , CAPPRM:CE , CAPPRM:MHLW , CAPPRM:MOM) + FREQ:50HZ + MOVOL:400V) + CAPPRE:IEC , CAPPRE:ULCUL + CAPPRM:ASME + FREQ:60HZ + MOVOL:460V **(25/02/2019 - 24/07/2019)** ((((CAPPRM:ASME , CAPPRM:MHLW) + (IDRY:N + MODEL:GA110VP_16 , MODEL:GA90VP_16) + MOVOL:460V , CAPPRM:ASME + MOVOL:380V) + FREQ:60HZ , (CAPPRM:AS1210 , CAPPRM:CE , CAPPRM:MHLW , CAPPRM:MOM) + FREQ:50HZ + MOVOL:400V) + COOL:AIR , CAPPRM:MHLW + COOL:WATER + FREQ:60HZ + IDRY:Y + MODEL:GA75VP_16 + MOVOL:460V) + CAPPRE:IEC , CAPPRE:ULCUL + CAPPRM:ASME + COOL:AIR + FREQ:60HZ + MOVOL:460V **(25/07/2019 - ...)**

Legend:

CAPPRE:IEC - Component approval electrical:IEC
CAPPRE:ULCUL - Component approval electrical:UL/cUL
CAPPRM:AS1210 - Component approval mechanical:AS1210
CAPPRM:ASME - Component approval mechanical:ASME
CAPPRM:CE - Component approval mechanical:CE
CAPPRM:MHLW - Component approval mechanical:MHLW
CAPPRM:MOM - Component approval mechanical:MOM
COOL:AIR - Cooling:Air cooled
COOL:WATER - Cooling:Water cooled
FREQ:50HZ - Frequency:50 Hz
FREQ:60HZ - Frequency:60 Hz
IDRY:N - Integrated dryer:No
IDRY:Y - Integrated dryer:Yes
MODEL:GA110VP_16 - Model:GA 110VSD+
MODEL:GA75VP_16 - Model:GA 75VSD+
MODEL:GA90VP_16 - Model:GA 90VSD+
MOVOL:380V - Supply voltage:380 V
MOVOL:400V - Supply voltage:400 V
MOVOL:460V - Supply voltage:460 V

21.1 - Electrical components and cubicle assembly 380V-460V/60Hz, 400V/50Hz - Non trafo

((((CAPPRM:ASME , CAPPRM:MHLW) + (IDRY:N + MODEL:GA110VP_16 , MODEL:GA90VP_16) + MOVOL:460V , CAPPRM:ASME + MOVOL:380V) + FREQ:60HZ , (CAPPRM:AS1210 , CAPPRM:CE , CAPPRM:MHLW , CAPPRM:MOM) + FREQ:50HZ + MOVOL:400V) + CAPPRE:IEC , CAPPRE:ULCUL + CAPPRM:ASME + FREQ:60HZ + MOVOL:460V) + COOL:AIR

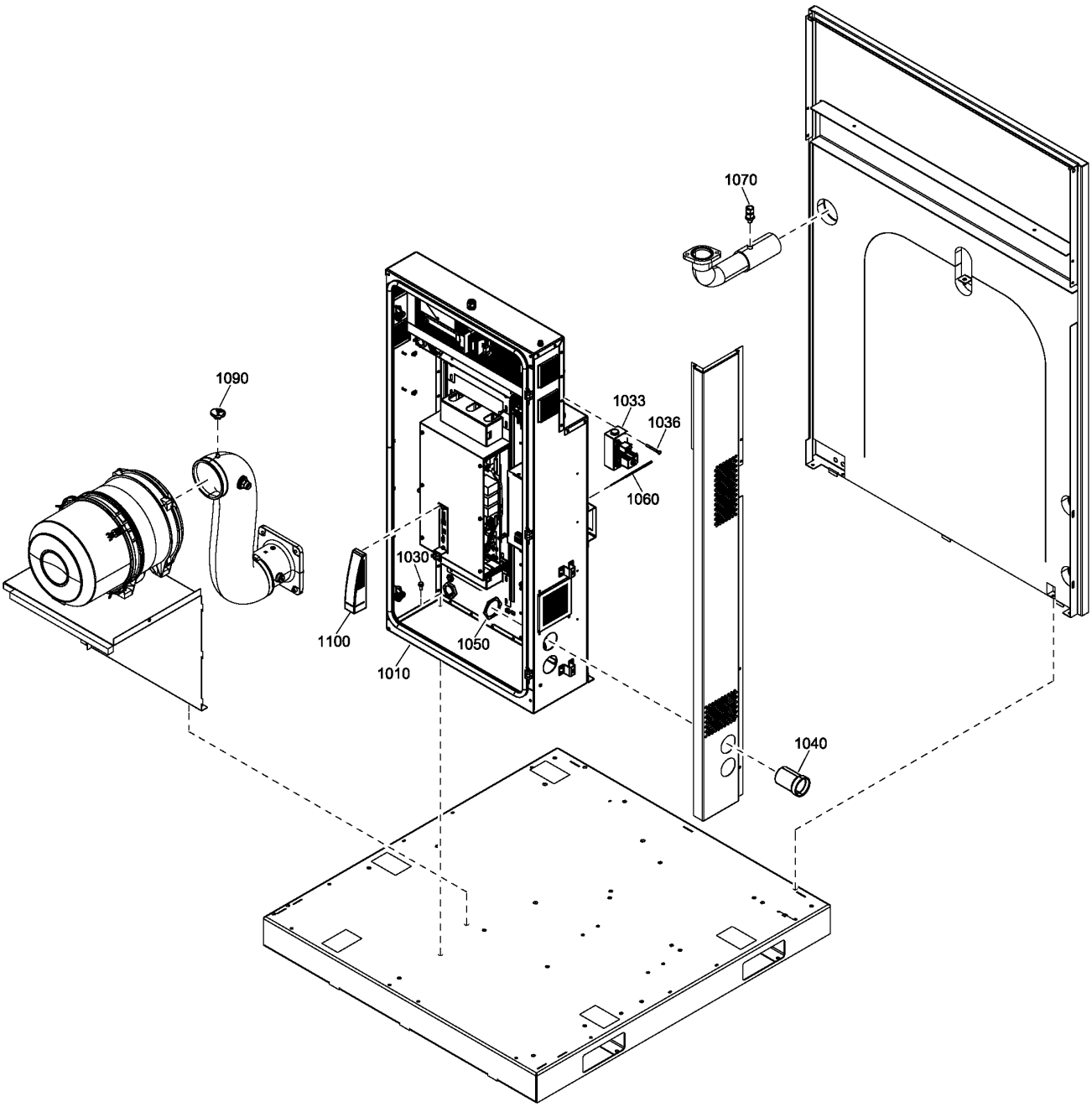

21.1 - Electrical components and cubicle assembly 380V-460V/60Hz, 400V/50Hz - Non trafo

((((CAPPRM:ASME , CAPPRM:MHLW) + (IDRY:N + MODEL:GA110VP_16 , MODEL:GA90VP_16) + MOVOL:460V , CAPPRM:ASME + MOVOL:380V) + FREQ:60HZ , (CAPPRM:AS1210 , CAPPRM:CE , CAPPRM:MHLW , CAPPRM:MOM) + FREQ:50HZ + MOVOL:400V) + CAPPRE:IEC , CAPPRE:ULCUL + CAPPRM:ASME + FREQ:60HZ + MOVOL:460V) + COOL:AIR

Ref	Part Number	Qty	Name	Validity
1090	1089 0607 02	1	WARNING DEVICE	**(06/03/2017 - 12/07/2017)** ((IDRY:N + MODEL:GA90VP_16 , MODEL:GA110VP_16 , MODEL:GA75VP_16) + CAPPRM:CE + FREQ:50HZ + MOVOL:400V , CAPPRM:ASME + FREQ:60HZ + IDRY:Y + MODEL:GA110VP_16 + MOVOL:380V) + CAPPRE:IEC , CAPPRE:ULCUL + CAPPRM:ASME + FREQ:60HZ + IDRY:N + MODEL:GA75VP_16 + MOVOL:460V **(13/07/2017 - 19/07/2017)** ((CAPPRE:IEC + CAPPRM:MHLW , CAPPRM:ASME) + IDRY:N + MODEL:GA75VP_16 + MOVOL:460V , CAPPRE:IEC + CAPPRM:ASME + IDRY:Y + MODEL:GA110VP_16 + MOVOL:380V) + FREQ:60HZ , (CAPPRM:AS1210 , CAPPRM:CE , CAPPRM:MHLW , CAPPRM:MOM) + (IDRY:N + MODEL:GA90VP_16 , MODEL:GA110VP_16 , MODEL:GA75VP_16) + CAPPRE:IEC + FREQ:50HZ + MOVOL:400V **(20/07/2017 - 14/12/2017)** ((((MOVOL:380V , MOVOL:460V) + CAPPRM:ASME , CAPPRM:MHLW + MOVOL:460V) + FREQ:60HZ , (CAPPRM:AS1210 , CAPPRM:CE , CAPPRM:MHLW , CAPPRM:MOM) + FREQ:50HZ + MOVOL:400V) + CAPPRE:IEC , CAPPRE:ULCUL + CAPPRM:ASME + FREQ:60HZ + MOVOL:460V) **(15/12/2017 - 01/02/2018)** ((((IDRY:N + MOVOL:380V , MOVOL:460V) + CAPPRM:ASME , CAPPRM:MHLW + MOVOL:460V) + FREQ:60HZ , (CAPPRM:AS1210 , CAPPRM:CE , CAPPRM:MHLW , CAPPRM:MOM) + FREQ:50HZ + MOVOL:400V) + CAPPRE:IEC , CAPPRE:ULCUL + CAPPRM:ASME + FREQ:60HZ + MOVOL:460V)
1100	1900 5352 00	1	CONTROL BOARD COVER	**(06/07/2017 - 12/07/2017)** ((IDRY:N + MODEL:GA90VP_16 , MODEL:GA110VP_16 , MODEL:GA75VP_16) + CAPPRM:CE + FREQ:50HZ + MOVOL:400V , CAPPRM:ASME + FREQ:60HZ + IDRY:Y + MODEL:GA110VP_16 + MOVOL:380V) + CAPPRE:IEC , CAPPRE:ULCUL + CAPPRM:ASME + FREQ:60HZ + IDRY:N + MODEL:GA75VP_16 + MOVOL:460V **(13/07/2017 - 19/07/2017)** ((CAPPRE:IEC + CAPPRM:MHLW , CAPPRM:ASME) + IDRY:N + MODEL:GA75VP_16 + MOVOL:460V , CAPPRE:IEC + CAPPRM:ASME + IDRY:Y + MODEL:GA110VP_16 + MOVOL:380V) + FREQ:60HZ , (CAPPRM:AS1210 , CAPPRM:CE , CAPPRM:MHLW , CAPPRM:MOM) + (IDRY:N + MODEL:GA90VP_16 , MODEL:GA110VP_16 , MODEL:GA75VP_16) + CAPPRE:IEC + FREQ:50HZ + MOVOL:400V **(20/07/2017 - 20/08/2018)** ((((MOVOL:380V , MOVOL:460V) + CAPPRM:ASME , CAPPRM:MHLW + MOVOL:460V) + FREQ:60HZ , (CAPPRM:AS1210 , CAPPRM:CE , CAPPRM:MHLW , CAPPRM:MOM) + FREQ:50HZ + MOVOL:400V) + CAPPRE:IEC , CAPPRE:ULCUL + CAPPRM:ASME + FREQ:60HZ + MOVOL:460V) **(21/08/2018 - 10/12/2018)** (((MOVOL:380V , MOVOL:460V) + CAPPRM:ASME , CAPPRM:MHLW + MOVOL:460V) + FREQ:60HZ , (CAPPRM:AS1210 , CAPPRM:CE , CAPPRM:MHLW , CAPPRM:MOM) + FREQ:50HZ + MOVOL:400V) + CAPPRE:IEC , CAPPRE:ULCUL + CAPPRM:ASME + FREQ:60HZ + MOVOL:460V **(11/12/2018 - 24/02/2019)** (((((IDRY:N + MODEL:GA110VP_16 , MODEL:GA90VP_16) + COOL:AIR , COOL:WATER) + (CAPPRM:ASME , CAPPRM:MHLW) + MOVOL:460V , CAPPRM:ASME + MOVOL:380V) + FREQ:60HZ , (CAPPRM:AS1210 , CAPPRM:CE , CAPPRM:MHLW , CAPPRM:MOM) + FREQ:50HZ + MOVOL:400V) + CAPPRE:IEC , CAPPRE:ULCUL + CAPPRM:ASME + FREQ:60HZ + MOVOL:460V **(25/02/2019 - 24/07/2019)** ((((CAPPRM:ASME , CAPPRM:MHLW) + (IDRY:N + MODEL:GA110VP_16 , MODEL:GA90VP_16) + MOVOL:460V , CAPPRM:ASME + MOVOL:380V) + FREQ:60HZ , (CAPPRM:AS1210 , CAPPRM:CE , CAPPRM:MHLW , CAPPRM:MOM) + FREQ:50HZ + MOVOL:400V) + COOL:AIR , CAPPRM:MHLW + COOL:WATER + FREQ:60HZ + IDRY:Y + MODEL:GA75VP_16 + MOVOL:460V) + CAPPRE:IEC , CAPPRE:ULCUL + CAPPRM:ASME + COOL:AIR + FREQ:60HZ + MOVOL:460V **(25/07/2019 - ...)**

Legend:

CAPPRE:IEC - Component approval electrical:IEC
CAPPRM:ASME - Component approval mechanical:ASME
CAPPRM:MOM - Component approval mechanical:MOM
FREQ:50HZ - Frequency:50 Hz
IDRY:Y - Integrated dryer:Yes
MODEL:GA90VP_16 - Model:GA 90VSD+
MOVOL:460V - Supply voltage:460 V
CAPPRE:ULCUL - Component approval electrical:UL/cUL
CAPPRM:CE - Component approval mechanical:CE
COOL:AIR - Cooling:Air cooled
FREQ:60HZ - Frequency:60 Hz
MODEL:GA110VP_16 - Model:GA 110VSD+
MOVOL:380V - Supply voltage:380 V
CAPPRM:AS1210 - Component approval mechanical:AS1210
CAPPRM:MHLW - Component approval mechanical:MHLW
COOL:WATER - Cooling:Water cooled
IDRY:N - Integrated dryer:No
MODEL:GA75VP_16 - Model:GA 75VSD+
MOVOL:400V - Supply voltage:400 V

21.2 - Electrical components and cubicle assembly 380V-460V/60Hz, 400V/50Hz - Non trafo - Water-cooled

((((CAPPRM:ASME , CAPPRM:MHLW) + (IDRY:N + MODEL:GA110VP_16 , MODEL:GA90VP_16) + MOVOL:460V , CAPPRM:ASME + MOVOL:380V) + FREQ:60HZ , (CAPPRM:AS1210 , CAPPRM:CE , CAPPRM:MHLW , CAPPRM:MOM) + FREQ:50HZ + MOVOL:400V) + CAPPRE:IEC , CAPPRE:ULCUL + CAPPRM:ASME + FREQ:60HZ + MOVOL:460V) + COOL:WATER

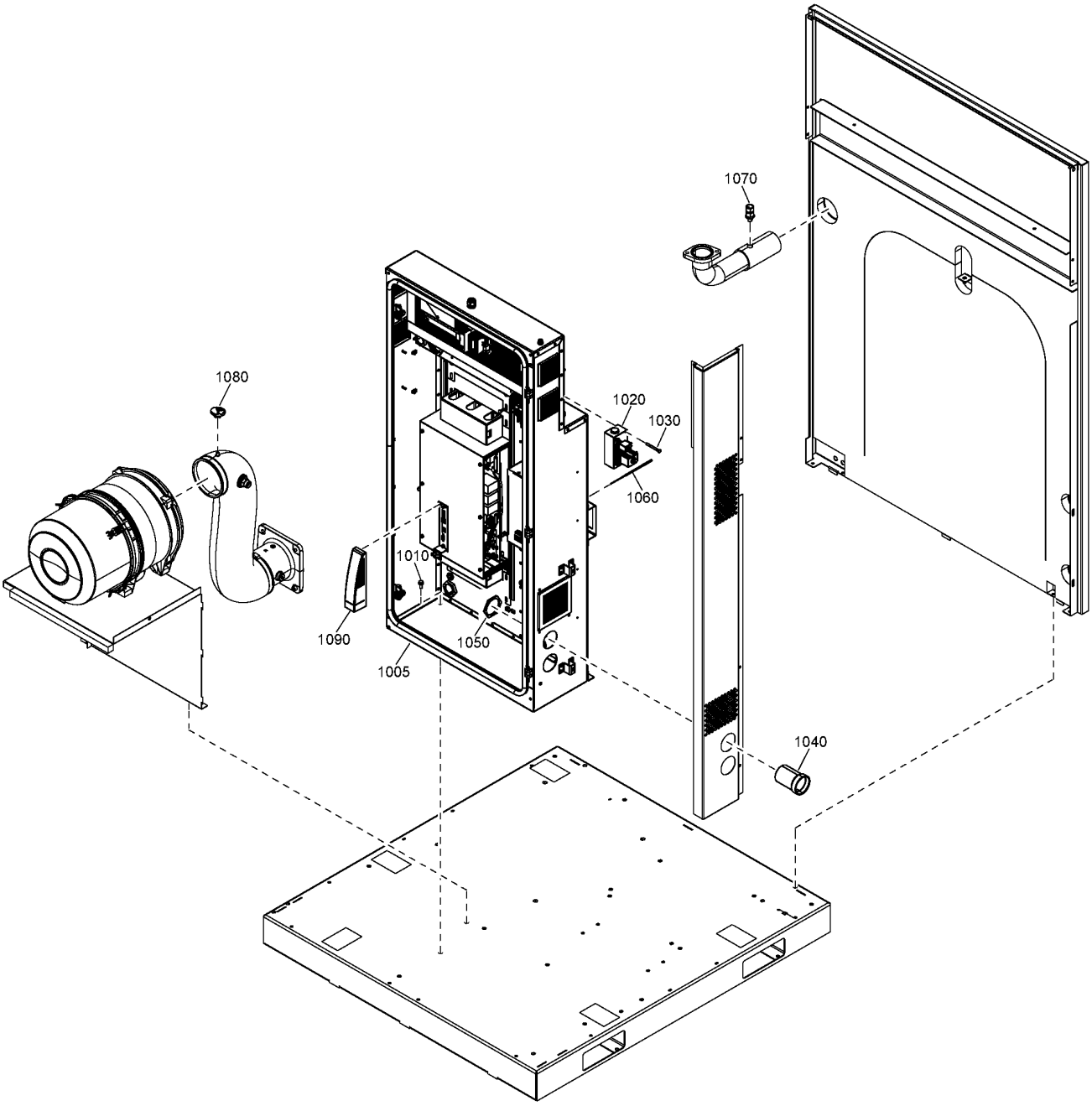

21.2 - Electrical components and cubicle assembly 380V-460V/60Hz, 400V/50Hz - Non trafo - Water-cooled

((((CAPPRM:ASME , CAPPRM:MHLW) + (IDRY:N + MODEL:GA110VP_16 , MODEL:GA90VP_16) + MOVOL:460V , CAPPRM:ASME + MOVOL:380V) + FREQ:60HZ , (CAPPRM:AS1210 , CAPPRM:CE , CAPPRM:MHLW , CAPPRM:MOM) + FREQ:50HZ + MOVOL:400V) + CAPPRE:IEC , CAPPRE:ULCUL + CAPPRM:ASME + FREQ:60HZ + MOVOL:460V) + COOL:WATER

Ref	Part Number	Qty	Name	Validity
1005	-	1	CUBICLE	
1010	0147 1963 08	6	HEXAGONAL BOLT	**(25/02/2019 - 24/07/2019)** ((((IDRY:N + MODEL:GA75VP_16 , MODEL:GA110VP_16 , MODEL:GA90VP_16) + CAPPRM:MHLW , CAPPRM:ASME) + MOVOL:460V , CAPPRM:ASME + MOVOL:380V) + FREQ:60HZ , (CAPPRM:AS1210 , CAPPRM:CE , CAPPRM:MHLW , CAPPRM:MOM) + FREQ:50HZ + MOVOL:400V) + CAPPRE:IEC , CAPPRE:ULCUL + CAPPRM:ASME + FREQ:60HZ + MOVOL:460V **(25/07/2019 - ...)**
1020	1649 8003 91	1	SOLENOID BLOCK ASSEMBLY	**(25/02/2019 - 24/07/2019)** ((((IDRY:N + MODEL:GA75VP_16 , MODEL:GA110VP_16 , MODEL:GA90VP_16) + CAPPRM:MHLW , CAPPRM:ASME) + MOVOL:460V , CAPPRM:ASME + MOVOL:380V) + FREQ:60HZ , (CAPPRM:AS1210 , CAPPRM:CE , CAPPRM:MHLW , CAPPRM:MOM) + FREQ:50HZ + MOVOL:400V) + CAPPRE:IEC , CAPPRE:ULCUL + CAPPRM:ASME + FREQ:60HZ + MOVOL:460V **(25/07/2019 - ...)**
1030	0147 1256 03	4	HEXAGONAL BOLT	**(25/02/2019 - 24/07/2019)** ((((IDRY:N + MODEL:GA75VP_16 , MODEL:GA110VP_16 , MODEL:GA90VP_16) + CAPPRM:MHLW , CAPPRM:ASME) + MOVOL:460V , CAPPRM:ASME + MOVOL:380V) + FREQ:60HZ , (CAPPRM:AS1210 , CAPPRM:CE , CAPPRM:MHLW , CAPPRM:MOM) + FREQ:50HZ + MOVOL:400V) + CAPPRE:IEC , CAPPRE:ULCUL + CAPPRM:ASME + FREQ:60HZ + MOVOL:460V **(25/07/2019 - ...)**
1040	1629 0314 23	2	ADAPTOR	**(25/02/2019 - 24/07/2019)** ((((IDRY:N + MODEL:GA75VP_16 , MODEL:GA110VP_16 , MODEL:GA90VP_16) + CAPPRM:MHLW , CAPPRM:ASME) + MOVOL:460V , CAPPRM:ASME + MOVOL:380V) + FREQ:60HZ , (CAPPRM:AS1210 , CAPPRM:CE , CAPPRM:MHLW , CAPPRM:MOM) + FREQ:50HZ + MOVOL:400V) + CAPPRE:IEC , CAPPRE:ULCUL + CAPPRM:ASME + FREQ:60HZ + MOVOL:460V **(25/07/2019 - ...)**
1050	0697 9809 19	2	LOCKNUT	**(25/02/2019 - 24/07/2019)** ((((IDRY:N + MODEL:GA75VP_16 , MODEL:GA110VP_16 , MODEL:GA90VP_16) + CAPPRM:MHLW , CAPPRM:ASME) + MOVOL:460V , CAPPRM:ASME + MOVOL:380V) + FREQ:60HZ , (CAPPRM:AS1210 , CAPPRM:CE , CAPPRM:MHLW , CAPPRM:MOM) + FREQ:50HZ + MOVOL:400V) + CAPPRE:IEC , CAPPRE:ULCUL + CAPPRM:ASME + FREQ:60HZ + MOVOL:460V **(25/07/2019 - ...)**
1060	1089 0574 70	1	TEMPERATURE SENSOR	**(25/02/2019 - 24/07/2019)** ((((IDRY:N + MODEL:GA75VP_16 , MODEL:GA110VP_16 , MODEL:GA90VP_16) + CAPPRM:MHLW , CAPPRM:ASME) + MOVOL:460V , CAPPRM:ASME + MOVOL:380V) + FREQ:60HZ , (CAPPRM:AS1210 , CAPPRM:CE , CAPPRM:MHLW , CAPPRM:MOM) + FREQ:50HZ + MOVOL:400V) + CAPPRE:IEC , CAPPRE:ULCUL + CAPPRM:ASME + FREQ:60HZ + MOVOL:460V **(25/07/2019 - ...)**
1070	1089 0575 54	1	PRESSURE TRANSDUCER	**(25/02/2019 - 24/07/2019)** ((((IDRY:N + MODEL:GA75VP_16 , MODEL:GA110VP_16 , MODEL:GA90VP_16) + CAPPRM:MHLW , CAPPRM:ASME) + MOVOL:460V , CAPPRM:ASME + MOVOL:380V) + FREQ:60HZ , (CAPPRM:AS1210 , CAPPRM:CE , CAPPRM:MHLW , CAPPRM:MOM) + FREQ:50HZ + MOVOL:400V) + CAPPRE:IEC , CAPPRE:ULCUL + CAPPRM:ASME + FREQ:60HZ + MOVOL:460V **(25/07/2019 - ...)**
1080	1089 0607 11	1	WARNING DEVICE	**(25/02/2019 - 24/07/2019)** ((((IDRY:N + MODEL:GA75VP_16 , MODEL:GA110VP_16 , MODEL:GA90VP_16) + CAPPRM:MHLW , CAPPRM:ASME) + MOVOL:460V , CAPPRM:ASME + MOVOL:380V) + FREQ:60HZ , (CAPPRM:AS1210 , CAPPRM:CE , CAPPRM:MHLW , CAPPRM:MOM) + FREQ:50HZ + MOVOL:400V) + CAPPRE:IEC , CAPPRE:ULCUL + CAPPRM:ASME + FREQ:60HZ + MOVOL:460V **(25/07/2019 - ...)**
1090	1900 5352 00	1	CONTROL BOARD COVER	**(25/02/2019 - 24/07/2019)** ((((IDRY:N + MODEL:GA75VP_16 , MODEL:GA110VP_16 , MODEL:GA90VP_16) + CAPPRM:MHLW , CAPPRM:ASME) + MOVOL:460V , CAPPRM:ASME + MOVOL:380V) + FREQ:60HZ , (CAPPRM:AS1210 , CAPPRM:CE , CAPPRM:MHLW , CAPPRM:MOM) + FREQ:50HZ + MOVOL:400V) + CAPPRE:IEC , CAPPRE:ULCUL + CAPPRM:ASME + FREQ:60HZ + MOVOL:460V **(25/07/2019 - ...)**

Legend:

CAPPRE:IEC - Component approval electrical:IEC
CAPPRE:ULCUL - Component approval electrical:UL/cUL
CAPPRM:AS1210 - Component approval mechanical:AS1210
CAPPRM:ASME - Component approval mechanical:ASME
CAPPRM:CE - Component approval mechanical:CE
CAPPRM:MHLW - Component approval mechanical:MHLW
CAPPRM:MOM - Component approval mechanical:MOM
COOL:WATER - Cooling:Water cooled
FREQ:50HZ - Frequency:50 Hz
FREQ:60HZ - Frequency:60 Hz
IDRY:N - Integrated dryer:No
MODEL:GA110VP_16 - Model:GA 110VSD+
MODEL:GA75VP_16 - Model:GA 75VSD+
MODEL:GA90VP_16 - Model:GA 90VSD+
MOVOL:380V - Supply voltage:380 V
MOVOL:400V - Supply voltage:400 V
MOVOL:460V - Supply voltage:460 V

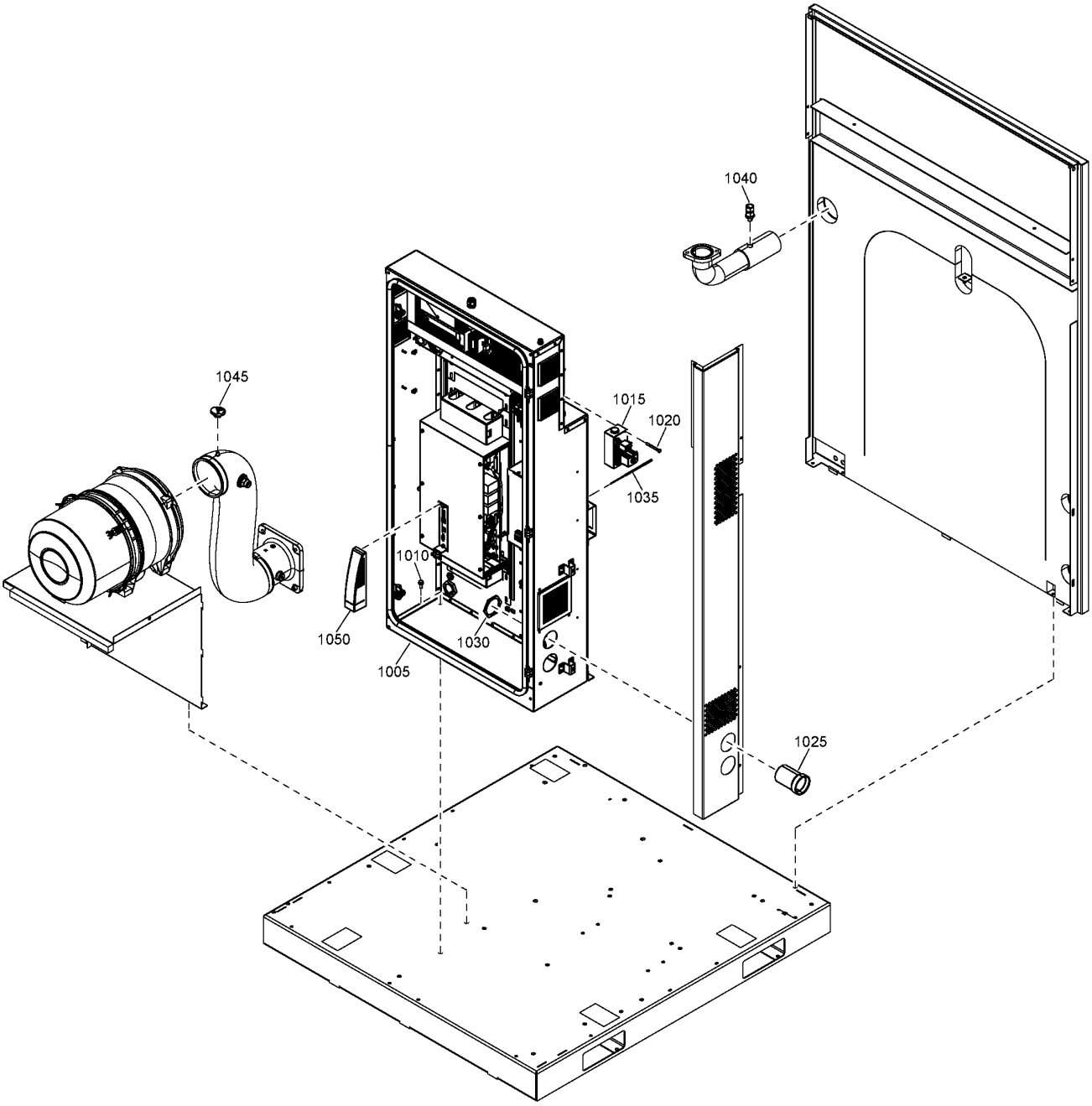
1040
1045
1015
1020
1035
1010
1050
1030
1005
1025

21.3 - Electrical components and cubicle assembly 380V-460V/60Hz, 400V/50Hz - Non trafo - ASME, MHLW

(CAPPRM:ASME , CAPPRM:MHLW) + (IDRY:Y + MODEL:GA110VP_16 , MODEL:GA75VP_16) + CAPPRE:IEC + COOL:WATER + FREQ:60HZ + MOVOL:460V

Ref	Part Number	Qty	Name	Validity
1005	-	1	CUBICLE	(25/07/2019 - ...)
1010	0147 1963 08	6	HEXAGONAL BOLT	(25/07/2019 - ...)
1015	1649 8003 91	1	SOLENOID BLOCK ASSEMBLY	(25/07/2019 - ...)
1020	0147 1256 03	4	HEXAGONAL BOLT	(25/07/2019 - ...)
1025	1629 0314 23	2	ADAPTOR	(25/07/2019 - ...)
1030	0697 9809 19	2	LOCKNUT	(25/07/2019 - ...)
1035	1089 0574 70	1	TEMPERATURE SENSOR	(25/07/2019 - ...)
1040	1089 0575 54	1	PRESSURE TRANSDUCER	(25/07/2019 - ...)
1045	1089 0607 11	1	WARNING DEVICE	(25/07/2019 - ...)
1050	1900 5352 00	1	CONTROL BOARD COVER	(25/07/2019 - ...)

Legend:

CAPPRE:IEC - Component approval electrical:IEC
CAPPRM:ASME - Component approval mechanical:ASME
CAPPRM:MHLW - Component approval mechanical:MHLW
COOL:WATER - Cooling:Water cooled
FREQ:60HZ - Frequency:60 Hz
IDRY:Y - Integrated dryer:Yes
MODEL:GA110VP_16 - Model:GA 110VSD+
MODEL:GA75VP_16 - Model:GA 75VSD+
MOVOL:460V - Supply voltage:460 V

21.4 - Electrical components and cubicle assembly 200V-500V/50Hz, 200V-230V-575V/60Hz - Trafo

((CAPPRE:IEC + CAPPRM:MHLW + MOVOL:200V , CAPPRE:ULCUL + CAPPRM:ASME + FREQ:60HZ + MOVOL:230V) + (MODEL:GA75VP_16 , MODEL:GA90VP_16) , CAPPRE:IEC + CAPPRM:CE + FREQ:50HZ + MOVOL:500V , CAPPRE:ULCUL + CAPPRM:ASME + FREQ:60HZ + MOVOL:575V) + COOL:AIR

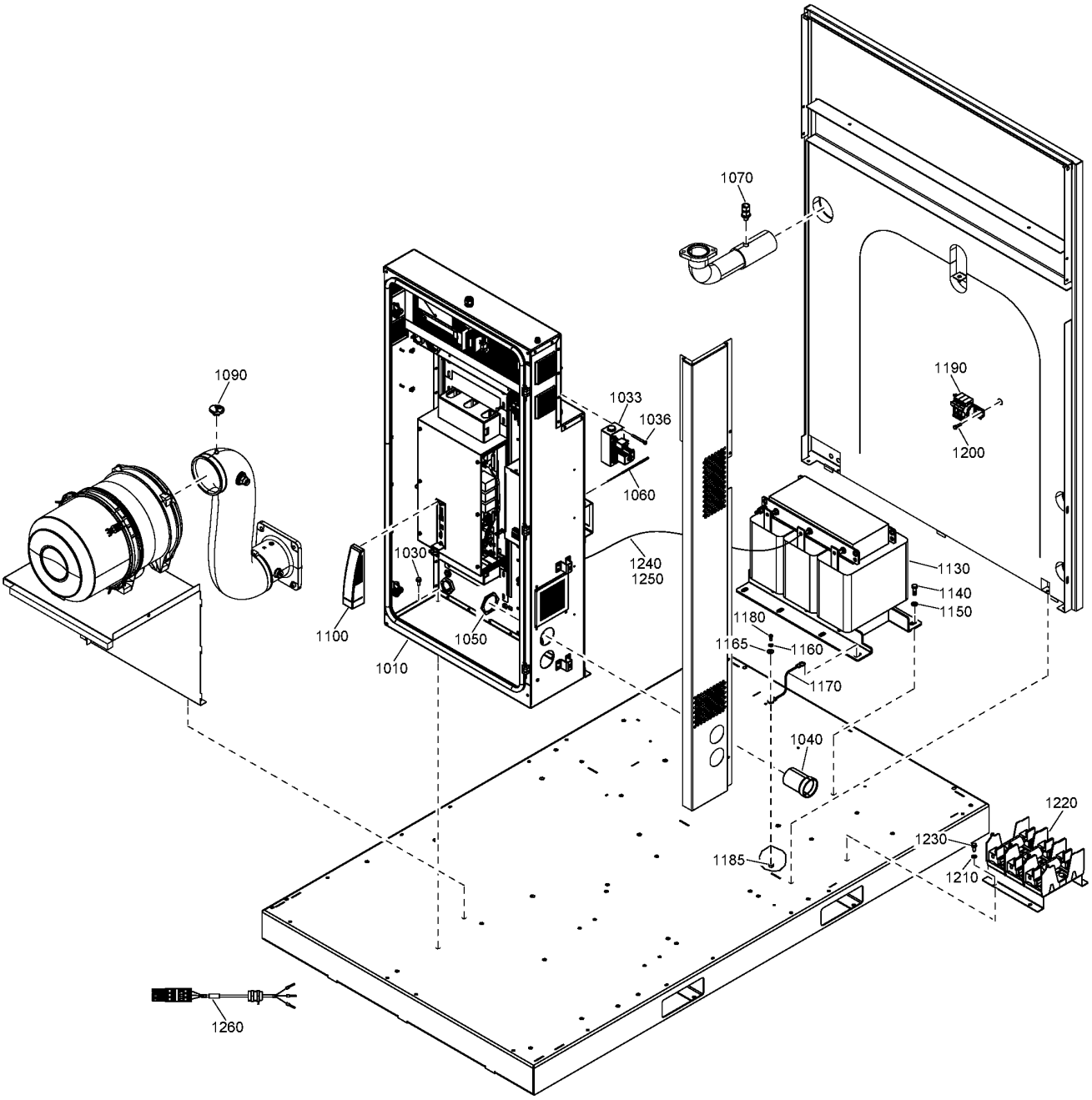

21.4 - Electrical components and cubicle assembly 200V-500V/50Hz, 200V-230V-575V/60Hz - Trafo

((CAPPRE:IEC + CAPPRM:MHLW + MOVOL:200V , CAPPRE:ULCUL + CAPPRM:ASME + FREQ:60HZ + MOVOL:230V) + (MODEL:GA75VP_16 , MODEL:GA90VP_16) , CAPPRE:IEC + CAPPRM:CE + FREQ:50HZ + MOVOL:500V , CAPPRE:ULCUL + CAPPRM:ASME + FREQ:60HZ + MOVOL:575V) + COOL:AIR

Ref	Part Number	Qty	Name	Validity
1010	-	1	CUBICLE	**(20/07/2017 - ...)**
1030	0147 1963 08	6	SCREW	**(06/07/2017 - 19/07/2017)** CAPPRE:ULCUL + CAPPRM:ASME + FREQ:60HZ + IDRY:Y + MODEL:GA110VP_16 + MOVOL:575V **(20/07/2017 - 30/12/2027)** ((CAPPRM:CE + FREQ:50HZ + MOVOL:500V , CAPPRM:MHLW + MOVOL:200V) + CAPPRE:IEC , (MOVOL:230V , MOVOL:575V) + CAPPRE:ULCUL + CAPPRM:ASME + FREQ:60HZ) **(31/12/2027 - ...)**
1033	1649 8003 91	1	SOLENOID BLOCK ASSEMBLY	**(20/07/2017 - 30/12/2027)** ((CAPPRM:CE + FREQ:50HZ + MOVOL:500V , CAPPRM:MHLW + MOVOL:200V) + CAPPRE:IEC , (MOVOL:230V , MOVOL:575V) + CAPPRE:ULCUL + CAPPRM:ASME + FREQ:60HZ) **(31/12/2027 - ...)**
1036	0147 1256 03	4	HEXAGON BOLT	**(20/07/2017 - 30/12/2027)** ((CAPPRM:CE + FREQ:50HZ + MOVOL:500V , CAPPRM:MHLW + MOVOL:200V) + CAPPRE:IEC , (MOVOL:230V , MOVOL:575V) + CAPPRE:ULCUL + CAPPRM:ASME + FREQ:60HZ) **(31/12/2027 - ...)**
1040	1629 0314 23	2	ADAPTER	**(06/07/2017 - 19/07/2017)** CAPPRE:ULCUL + CAPPRM:ASME + FREQ:60HZ + IDRY:Y + MODEL:GA110VP_16 + MOVOL:575V **(20/07/2017 - 30/12/2027)** ((CAPPRM:CE + FREQ:50HZ + MOVOL:500V , CAPPRM:MHLW + MOVOL:200V) + CAPPRE:IEC , (MOVOL:230V , MOVOL:575V) + CAPPRE:ULCUL + CAPPRM:ASME + FREQ:60HZ) **(31/12/2027 - ...)**
1050	0697 9809 19	2	LOCKNUT	**(06/07/2017 - 19/07/2017)** CAPPRE:ULCUL + CAPPRM:ASME + FREQ:60HZ + IDRY:Y + MODEL:GA110VP_16 + MOVOL:575V **(20/07/2017 - 30/12/2027)** ((CAPPRM:CE + FREQ:50HZ + MOVOL:500V , CAPPRM:MHLW + MOVOL:200V) + CAPPRE:IEC , (MOVOL:230V , MOVOL:575V) + CAPPRE:ULCUL + CAPPRM:ASME + FREQ:60HZ) **(31/12/2027 - ...)**
1060	1089 0708 12	1	THERMOMETER PT1000	**(06/07/2017 - 19/07/2017)** CAPPRE:ULCUL + CAPPRM:ASME + FREQ:60HZ + IDRY:Y + MODEL:GA110VP_16 + MOVOL:575V **(20/07/2017 - 18/04/2018)** ((CAPPRM:CE + FREQ:50HZ + MOVOL:500V , CAPPRM:MHLW + MOVOL:200V) + CAPPRE:IEC , (MOVOL:230V , MOVOL:575V) + CAPPRE:ULCUL + CAPPRM:ASME + FREQ:60HZ)
1070	1089 0575 54	1	PRESSURE TRANSDUCER	**(05/05/2017 - 19/07/2017)** CAPPRE:ULCUL + CAPPRM:ASME + FREQ:60HZ + IDRY:Y + MODEL:GA110VP_16 + MOVOL:575V **(20/07/2017 - 30/12/2027)** ((CAPPRM:CE + FREQ:50HZ + MOVOL:500V , CAPPRM:MHLW + MOVOL:200V) + CAPPRE:IEC , (MOVOL:230V , MOVOL:575V) + CAPPRE:ULCUL + CAPPRM:ASME + FREQ:60HZ) **(31/12/2027 - ...)**
1090	1089 0607 11	1	WARNING DEVICE	**(15/12/2017 - 01/02/2018)** CAPPRE:IEC + CAPPRM:MHLW + FREQ:60HZ + MOVOL:200V **(02/02/2018 - 30/12/2027)** ((CAPPRM:CE + FREQ:50HZ + MOVOL:500V , CAPPRM:MHLW + MOVOL:200V) + CAPPRE:IEC , (MOVOL:230V , MOVOL:575V) + CAPPRE:ULCUL + CAPPRM:ASME + FREQ:60HZ) **(31/12/2027 - ...)**
1090	1089 0607 02	1	WARNING DEVICE	**(06/03/2017 - 19/07/2017)** CAPPRE:ULCUL + CAPPRM:ASME + FREQ:60HZ + IDRY:Y + MODEL:GA110VP_16 + MOVOL:575V **(20/07/2017 - 14/12/2017)** ((CAPPRM:CE + FREQ:50HZ + MOVOL:500V , CAPPRM:MHLW + MOVOL:200V) + CAPPRE:IEC , (MOVOL:230V , MOVOL:575V) + CAPPRE:ULCUL + CAPPRM:ASME + FREQ:60HZ) **(15/12/2017 - 01/02/2018)** ((CAPPRM:CE + MOVOL:500V , CAPPRM:MHLW + MOVOL:200V) + CAPPRE:IEC + FREQ:50HZ , (MOVOL:230V , MOVOL:575V) + CAPPRE:ULCUL + CAPPRM:ASME + FREQ:60HZ)
1100	1900 5352 00	1	CONTROL BOARD COVER	**(06/07/2017 - 19/07/2017)** CAPPRE:ULCUL + CAPPRM:ASME + FREQ:60HZ + IDRY:Y + MODEL:GA110VP_16 + MOVOL:575V **(20/07/2017 - 30/12/2027)** ((CAPPRM:CE + FREQ:50HZ + MOVOL:500V , CAPPRM:MHLW + MOVOL:200V) + CAPPRE:IEC , (MOVOL:230V , MOVOL:575V) + CAPPRE:ULCUL + CAPPRM:ASME + FREQ:60HZ) **(31/12/2027 - ...)**

Legend:

CAPPRE:IEC - Component approval electrical:IEC
CAPPRM:CE - Component approval mechanical:CE
FREQ:50HZ - Frequency:50 Hz
MODEL:GA110VP_16 - Model:GA 110VSD+
MOVOL:200V - Supply voltage:200 V
MOVOL:575V - Supply voltage:575 V
CAPPRE:ULCUL - Component approval electrical:UL/cUL
CAPPRM:MHLW - Component approval mechanical:MHLW
FREQ:60HZ - Frequency:60 Hz
MODEL:GA75VP_16 - Model:GA 75VSD+
MOVOL:230V - Supply voltage:230 V
CAPPRM:ASME - Component approval mechanical:ASME
COOL:AIR - Cooling:Air cooled
IDRY:Y - Integrated dryer:Yes
MODEL:GA90VP_16 - Model:GA 90VSD+
MOVOL:500V - Supply voltage:500 V

21.4 - Electrical components and cubicle assembly 200V-500V/50Hz, 200V-230V-575V/60Hz - Trafo

((CAPPRE:IEC + CAPPRM:MHLW + MOVOL:200V , CAPPRE:ULCUL + CAPPRM:ASME + FREQ:60HZ + MOVOL:230V) + (MODEL:GA75VP_16 , MODEL:GA90VP_16) , CAPPRE:IEC + CAPPRM:CE + FREQ:50HZ + MOVOL:500V , CAPPRE:ULCUL + CAPPRM:ASME + FREQ:60HZ + MOVOL:575V) + COOL:AIR

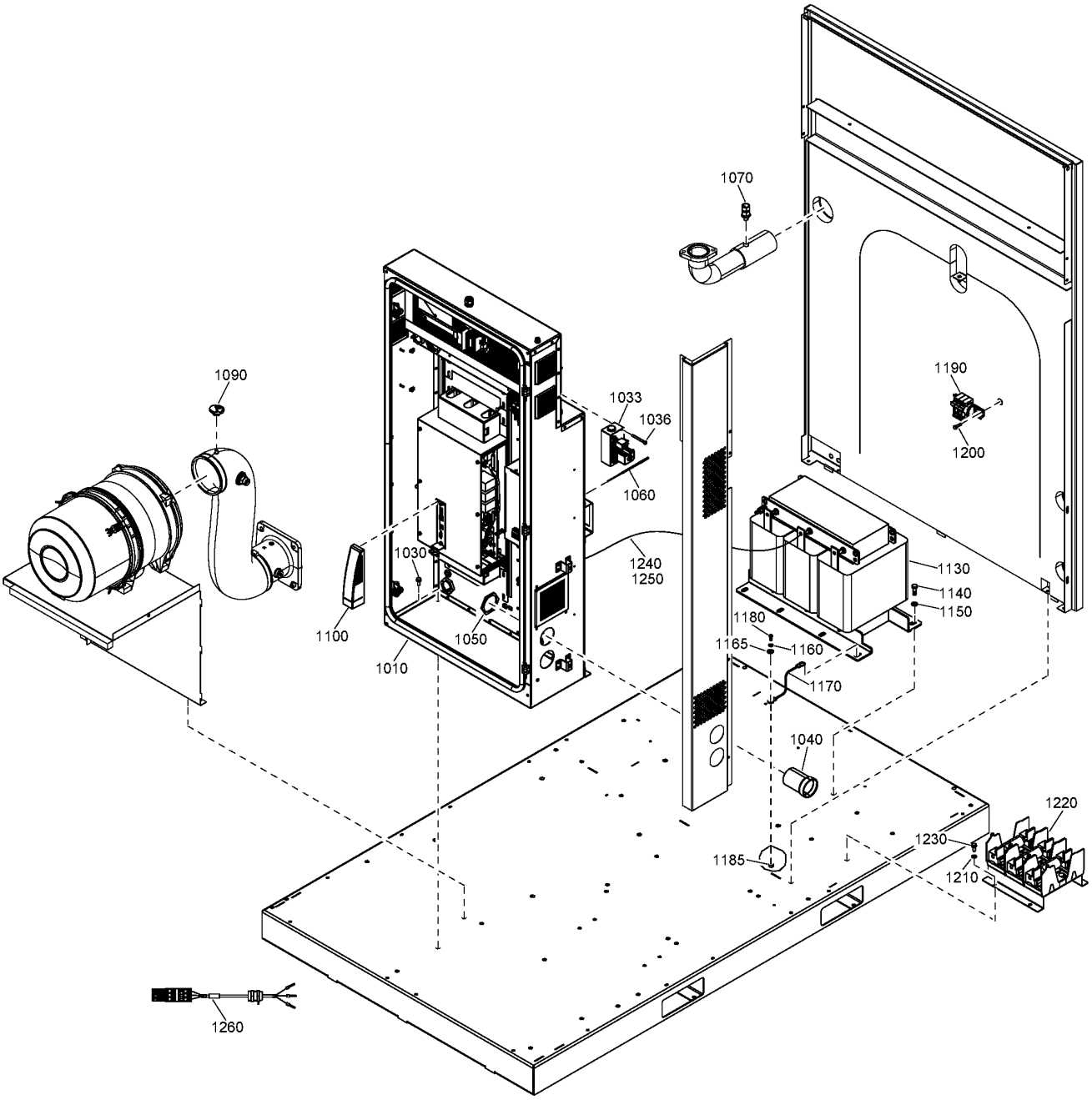

Ref	Part Number	Qty	Name	Validity
1130	1649 8002 33	1	TRANSFORMER	**(20/07/2017 - 16/10/2017)** CAPPRE:IEC + CAPPRM:MHLW + FREQ:60HZ + MODEL:GA110VP_16 + MOVOL:200V **(17/10/2017 - 30/12/2027)** CAPPRE:IEC + CAPPRM:MHLW + FREQ:60HZ + MOVOL:200V **(31/12/2027 - ...)** (MODEL:GA75VP_16 , MODEL:GA90VP_16) + CAPPRE:IEC + CAPPRM:MHLW + FREQ:60HZ + MOVOL:200V
1130	1649 8002 30	1	TRANSFORMER	**(20/07/2017 - 16/10/2017)** CAPPRE:IEC + CAPPRM:MHLW + FREQ:60HZ + MODEL:GA90VP_16 + MOVOL:200V
1130	1649 8002 28	1	TRANSFORMER	**(20/07/2017 - ...)** (CAPPRE:IEC + CAPPRM:CE + FREQ:50HZ + MOVOL:500V , CAPPRE:ULCUL + CAPPRM:ASME + FREQ:60HZ + MOVOL:575V) + MODEL:GA75VP_16
1130	1649 8002 34	1	TRANSFORMER	**(06/03/2017 - 19/07/2017)** CAPPRE:ULCUL + CAPPRM:ASME + FREQ:60HZ + IDRY:Y + MODEL:GA110VP_16 + MOVOL:575V **(20/07/2017 - 16/10/2017)** (CAPPRE:IEC + CAPPRM:CE + FREQ:50HZ + MOVOL:500V , CAPPRE:ULCUL + CAPPRM:ASME + FREQ:60HZ + MOVOL:575V) + MODEL:GA110VP_16 **(17/10/2017 - ...)** (CAPPRE:IEC + CAPPRM:CE + FREQ:50HZ + MOVOL:500V , CAPPRE:ULCUL + CAPPRM:ASME + FREQ:60HZ + MOVOL:575V) + (MODEL:GA110VP_16 , MODEL:GA90VP_16)
1130	1649 8002 31	1	TRANSFORMER	**(20/07/2017 - 16/10/2017)** (CAPPRE:IEC + CAPPRM:CE + FREQ:50HZ + MOVOL:500V , CAPPRE:ULCUL + CAPPRM:ASME + FREQ:60HZ + MOVOL:575V) + MODEL:GA90VP_16
1130	1649 8002 32	1	TRANSFORMER	**(20/07/2017 - 16/10/2017)** (CAPPRE:IEC + CAPPRM:MHLW + FREQ:50HZ + MOVOL:200V , CAPPRE:ULCUL + CAPPRM:ASME + FREQ:60HZ + MOVOL:230V) + MODEL:GA90VP_16
1130	1649 8002 35	1	TRANSFORMER	**(20/07/2017 - 16/10/2017)** (CAPPRE:IEC + CAPPRM:MHLW + FREQ:50HZ + MOVOL:200V , CAPPRE:ULCUL + CAPPRM:ASME + FREQ:60HZ + MOVOL:230V) + MODEL:GA110VP_16 **(17/10/2017 - 30/12/2027)** (CAPPRE:IEC + CAPPRM:MHLW + FREQ:50HZ + MOVOL:200V , CAPPRE:ULCUL + CAPPRM:ASME + FREQ:60HZ + MOVOL:230V) + (MODEL:GA110VP_16 , MODEL:GA90VP_16) **(31/12/2027 - ...)** (CAPPRE:IEC + CAPPRM:MHLW + FREQ:50HZ + MOVOL:200V , CAPPRE:ULCUL + CAPPRM:ASME + FREQ:60HZ + MOVOL:230V) + MODEL:GA90VP_16
1130	1649 8002 29	1	TRANSFORMER	**(20/07/2017 - ...)** (CAPPRE:IEC + CAPPRM:MHLW + FREQ:50HZ + MOVOL:200V , CAPPRE:ULCUL + CAPPRM:ASME + FREQ:60HZ + MOVOL:230V) + MODEL:GA75VP_16
1130	1649 8002 27	1	TRANSFORMER	**(20/07/2017 - 16/10/2017)** CAPPRE:IEC + CAPPRM:MHLW + FREQ:60HZ + MODEL:GA75VP_16 + MOVOL:200V
1140	0147 1362 03	4	SCREW	**(06/03/2017 - 19/07/2017)** CAPPRE:ULCUL + CAPPRM:ASME + FREQ:60HZ + IDRY:Y + MODEL:GA110VP_16 + MOVOL:575V **(20/07/2017 - 30/12/2027)** ((CAPPRM:CE + FREQ:50HZ + MOVOL:500V , CAPPRM:MHLW + MOVOL:200V) + CAPPRE:IEC , (MOVOL:230V , MOVOL:575V) + CAPPRE:ULCUL + CAPPRM:ASME + FREQ:60HZ) **(31/12/2027 - ...)**
1150	0301 2344 00	4	PLAIN WASHER	**(06/03/2017 - 19/07/2017)** CAPPRE:ULCUL + CAPPRM:ASME + FREQ:60HZ + IDRY:Y + MODEL:GA110VP_16 + MOVOL:575V **(20/07/2017 - 30/12/2027)** ((CAPPRM:CE + FREQ:50HZ + MOVOL:500V , CAPPRM:MHLW + MOVOL:200V) + CAPPRE:IEC , (MOVOL:230V , MOVOL:575V) + CAPPRE:ULCUL + CAPPRM:ASME + FREQ:60HZ) **(31/12/2027 - ...)**
1160	0333 3227 00	3	WASHER	**(06/07/2017 - 19/07/2017)** CAPPRE:ULCUL + CAPPRM:ASME + FREQ:60HZ + IDRY:Y + MODEL:GA110VP_16 + MOVOL:575V **(20/07/2017 - ...)** CAPPRE:ULCUL + CAPPRM:ASME + FREQ:60HZ + MOVOL:575V
1165	0300 0274 34	2	WASHER M8	**(06/07/2017 - 19/07/2017)** CAPPRE:ULCUL + CAPPRM:ASME + FREQ:60HZ + IDRY:Y + MODEL:GA110VP_16 + MOVOL:575V **(20/07/2017 - ...)** CAPPRE:ULCUL + CAPPRM:ASME + FREQ:60HZ + MOVOL:575V
1170	1613 8967 17	1	GROUNDING CABLE	**(06/07/2017 - 19/07/2017)** CAPPRE:ULCUL + CAPPRM:ASME + FREQ:60HZ + IDRY:Y + MODEL:GA110VP_16 + MOVOL:575V **(20/07/2017 - ...)** CAPPRE:ULCUL + CAPPRM:ASME + FREQ:60HZ + MOVOL:575V
1180	0226 0301 00	2	TAPPING SCREW	**(06/07/2017 - 19/07/2017)** CAPPRE:ULCUL + CAPPRM:ASME + FREQ:60HZ + IDRY:Y + MODEL:GA110VP_16 + MOVOL:575V **(20/07/2017 - ...)** CAPPRE:ULCUL + CAPPRM:ASME + FREQ:60HZ + MOVOL:575V

Legend:

CAPPRE:IEC - Component approval electrical:IEC
CAPPRE:ULCUL - Component approval electrical:UL/cUL
CAPPRM:ASME - Component approval mechanical:ASME
CAPPRM:CE - Component approval mechanical:CE
CAPPRM:MHLW - Component approval mechanical:MHLW
COOL:AIR - Cooling:Air cooled
FREQ:50HZ - Frequency:50 Hz
FREQ:60HZ - Frequency:60 Hz
IDRY:Y - Integrated dryer:Yes
MODEL:GA110VP_16 - Model:GA 110VSD+
MODEL:GA75VP_16 - Model:GA 75VSD+
MODEL:GA90VP_16 - Model:GA 90VSD+
MOVOL:200V - Supply voltage:200 V
MOVOL:230V - Supply voltage:230 V
MOVOL:500V - Supply voltage:500 V
MOVOL:575V - Supply voltage:575 V

21.4 - Electrical components and cubicle assembly 200V-500V/50Hz, 200V-230V-575V/60Hz - Trafo

((CAPPRE:IEC + CAPPRM:MHLW + MOVOL:200V , CAPPRE:ULCUL + CAPPRM:ASME + FREQ:60HZ + MOVOL:230V) + (MODEL:GA75VP_16 , MODEL:GA90VP_16) , CAPPRE:IEC + CAPPRM:CE + FREQ:50HZ + MOVOL:500V , CAPPRE:ULCUL + CAPPRM:ASME + FREQ:60HZ + MOVOL:575V) + COOL:AIR

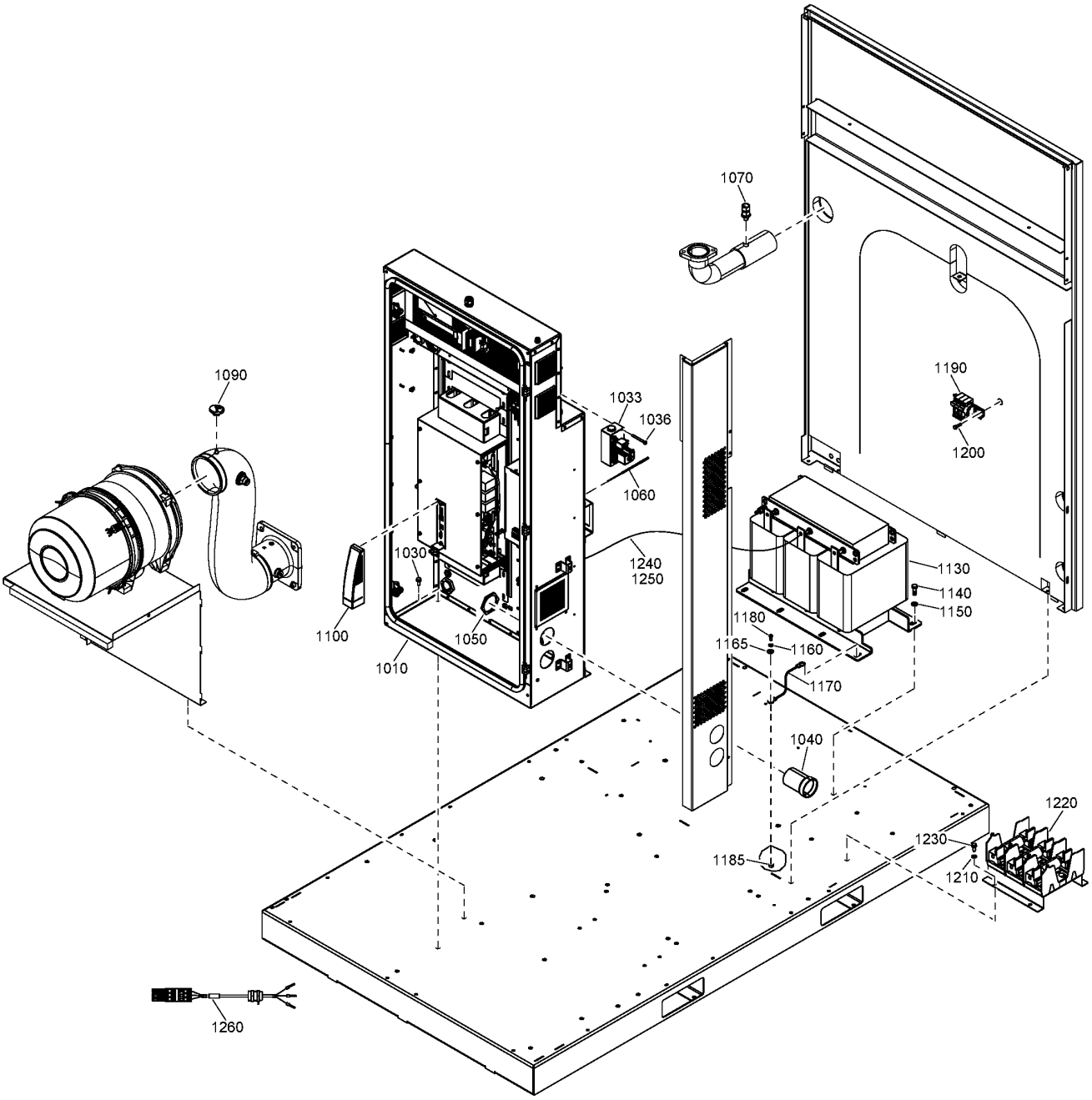

Ref	Part Number	Qty	Name	Validity
1185	0266 2110 00	1	NUT	**(06/07/2017 - 19/07/2017)** CAPPRE:ULCUL + CAPPRM:ASME + FREQ:60HZ + IDRY:Y + MODEL:GA110VP_16 + MOVOL:575V **(20/07/2017 - ...)** CAPPRE:ULCUL + CAPPRM:ASME + FREQ:60HZ + MOVOL:575V
1190	1649 8003 66	1	FUSE ASSEMBLY	**(06/03/2017 - 19/07/2017)** CAPPRE:ULCUL + CAPPRM:ASME + FREQ:60HZ + IDRY:Y + MODEL:GA110VP_16 + MOVOL:575V **(20/07/2017 - ...)** (CAPPRE:IEC + CAPPRM:CE + FREQ:50HZ + MOVOL:500V , CAPPRE:ULCUL + CAPPRM:ASME + FREQ:60HZ + MOVOL:575V)
1200	1079 2263 02	2	SCREW	**(11/12/2017 - ...)** (CAPPRE:IEC + CAPPRM:CE + FREQ:50HZ + MOVOL:500V , CAPPRE:ULCUL + CAPPRM:ASME + FREQ:60HZ + MOVOL:575V)
1200	0147 1173 03	2	HEXAGON BOLT	**(06/03/2017 - 19/07/2017)** CAPPRE:ULCUL + CAPPRM:ASME + FREQ:60HZ + IDRY:Y + MODEL:GA110VP_16 + MOVOL:575V **(20/07/2017 - 10/12/2017)** (CAPPRE:IEC + CAPPRM:CE + FREQ:50HZ + MOVOL:500V , CAPPRE:ULCUL + CAPPRM:ASME + FREQ:60HZ + MOVOL:575V)
1210	0301 2315 00	2	PLAIN WASHER	**(06/03/2017 - 19/07/2017)** CAPPRE:ULCUL + CAPPRM:ASME + FREQ:60HZ + IDRY:Y + MODEL:GA110VP_16 + MOVOL:575V **(20/07/2017 - 10/12/2017)** (CAPPRE:IEC + CAPPRM:CE + FREQ:50HZ + MOVOL:500V , CAPPRE:ULCUL + CAPPRM:ASME + FREQ:60HZ + MOVOL:575V)
1220	1649 8003 72	1	FUSE HOLDER	**(20/07/2017 - ...)** ((MOVOL:230V , MOVOL:575V) + MODEL:GA75VP_16 , MODEL:GA90VP_16 + MOVOL:230V) + CAPPRE:ULCUL + CAPPRM:ASME + FREQ:60HZ
	• 1089 0591 64	3	FUSE	**(09/03/2018 - ...)** ((MOVOL:230V , MOVOL:575V) + MODEL:GA75VP_16 , MODEL:GA90VP_16 + MOVOL:230V) + CAPPRE:ULCUL + CAPPRM:ASME + FREQ:60HZ
1220	1649 8003 73	1	FUSE HOLDER	**(20/07/2017 - ...)** (CAPPRM:CE + FREQ:50HZ + MOVOL:500V , CAPPRM:MHLW + MOVOL:200V) + CAPPRE:IEC + MODEL:GA75VP_16 , CAPPRE:ULCUL + CAPPRM:ASME + FREQ:60HZ + MODEL:GA90VP_16 + MOVOL:575V
1220	1649 8003 75	1	FUSE HOLDER	**(06/03/2017 - 19/07/2017)** CAPPRE:ULCUL + CAPPRM:ASME + FREQ:60HZ + IDRY:Y + MODEL:GA110VP_16 + MOVOL:575V **(20/07/2017 - 30/12/2027)** ((CAPPRM:CE + FREQ:50HZ + MOVOL:500V , CAPPRM:MHLW + MOVOL:200V) + CAPPRE:IEC , CAPPRE:ULCUL + CAPPRM:ASME + FREQ:60HZ + MOVOL:575V) + MODEL:GA110VP_16 **(31/12/2027 - ...)** (CAPPRE:IEC + CAPPRM:CE + FREQ:50HZ + MOVOL:500V , CAPPRE:ULCUL + CAPPRM:ASME + FREQ:60HZ + MOVOL:575V) + MODEL:GA110VP_16
1220	1649 8003 74	1	FUSE HOLDER	**(20/07/2017 - 30/12/2027)** (CAPPRM:CE + FREQ:50HZ + MOVOL:500V , CAPPRM:MHLW + MOVOL:200V) + CAPPRE:IEC + MODEL:GA90VP_16 , CAPPRE:ULCUL + CAPPRM:ASME + FREQ:60HZ + MODEL:GA110VP_16 + MOVOL:230V **(31/12/2027 - ...)** (CAPPRM:CE + FREQ:50HZ + MOVOL:500V , CAPPRM:MHLW + MOVOL:200V) + CAPPRE:IEC + MODEL:GA90VP_16
1230	0147 1963 08	4	SCREW	**(06/03/2017 - 19/07/2017)** CAPPRE:ULCUL + CAPPRM:ASME + FREQ:60HZ + IDRY:Y + MODEL:GA110VP_16 + MOVOL:575V **(20/07/2017 - 30/12/2027)** ((CAPPRM:CE + FREQ:50HZ + MOVOL:500V , CAPPRM:MHLW + MOVOL:200V) + CAPPRE:IEC , (MOVOL:230V , MOVOL:575V) + CAPPRE:ULCUL + CAPPRM:ASME + FREQ:60HZ) **(31/12/2027 - ...)**
1240	1649 8002 66	1	CABLE TRAFO	**(20/07/2017 - ...)** ((CAPPRM:CE + FREQ:50HZ + MOVOL:500V , CAPPRM:MHLW + MOVOL:200V) + CAPPRE:IEC , (MOVOL:230V , MOVOL:575V) + CAPPRE:ULCUL + CAPPRM:ASME + FREQ:60HZ) + (MODEL:GA75VP_16 , MODEL:GA90VP_16)
1240	1649 8002 64	1	CABLE TRAFO	**(06/03/2017 - 19/07/2017)** CAPPRE:ULCUL + CAPPRM:ASME + FREQ:60HZ + IDRY:Y + MODEL:GA110VP_16 + MOVOL:575V **(20/07/2017 - 30/12/2027)** ((CAPPRM:CE + FREQ:50HZ + MOVOL:500V , CAPPRM:MHLW + MOVOL:200V) + CAPPRE:IEC , (MOVOL:230V , MOVOL:575V) + CAPPRE:ULCUL + CAPPRM:ASME + FREQ:60HZ) + MODEL:GA110VP_16 **(31/12/2027 - ...)** (CAPPRE:IEC + CAPPRM:CE + FREQ:50HZ + MOVOL:500V , CAPPRE:ULCUL + CAPPRM:ASME + FREQ:60HZ + MOVOL:575V) + MODEL:GA110VP_16

Legend:

CAPPRE:IEC - Component approval electrical:IEC
CAPPRE:ULCUL - Component approval electrical:UL/cUL
CAPPRM:ASME - Component approval mechanical:ASME
CAPPRM:CE - Component approval mechanical:CE
CAPPRM:MHLW - Component approval mechanical:MHLW
COOL:AIR - Cooling:Air cooled
FREQ:50HZ - Frequency:50 Hz
FREQ:60HZ - Frequency:60 Hz
IDRY:Y - Integrated dryer:Yes
MODEL:GA110VP_16 - Model:GA 110VSD+
MODEL:GA75VP_16 - Model:GA 75VSD+
MODEL:GA90VP_16 - Model:GA 90VSD+
MOVOL:200V - Supply voltage:200 V
MOVOL:230V - Supply voltage:230 V
MOVOL:500V - Supply voltage:500 V
MOVOL:575V - Supply voltage:575 V

21.4 - Electrical components and cubicle assembly 200V-500V/50Hz, 200V-230V-575V/60Hz - Trafo

((CAPPRE:IEC + CAPPRM:MHLW + MOVOL:200V , CAPPRE:ULCUL + CAPPRM:ASME + FREQ:60HZ + MOVOL:230V) + (MODEL:GA75VP_16 , MODEL:GA90VP_16) , CAPPRE:IEC + CAPPRM:CE + FREQ:50HZ + MOVOL:500V , CAPPRE:ULCUL + CAPPRM:ASME + FREQ:60HZ + MOVOL:575V) + COOL:AIR

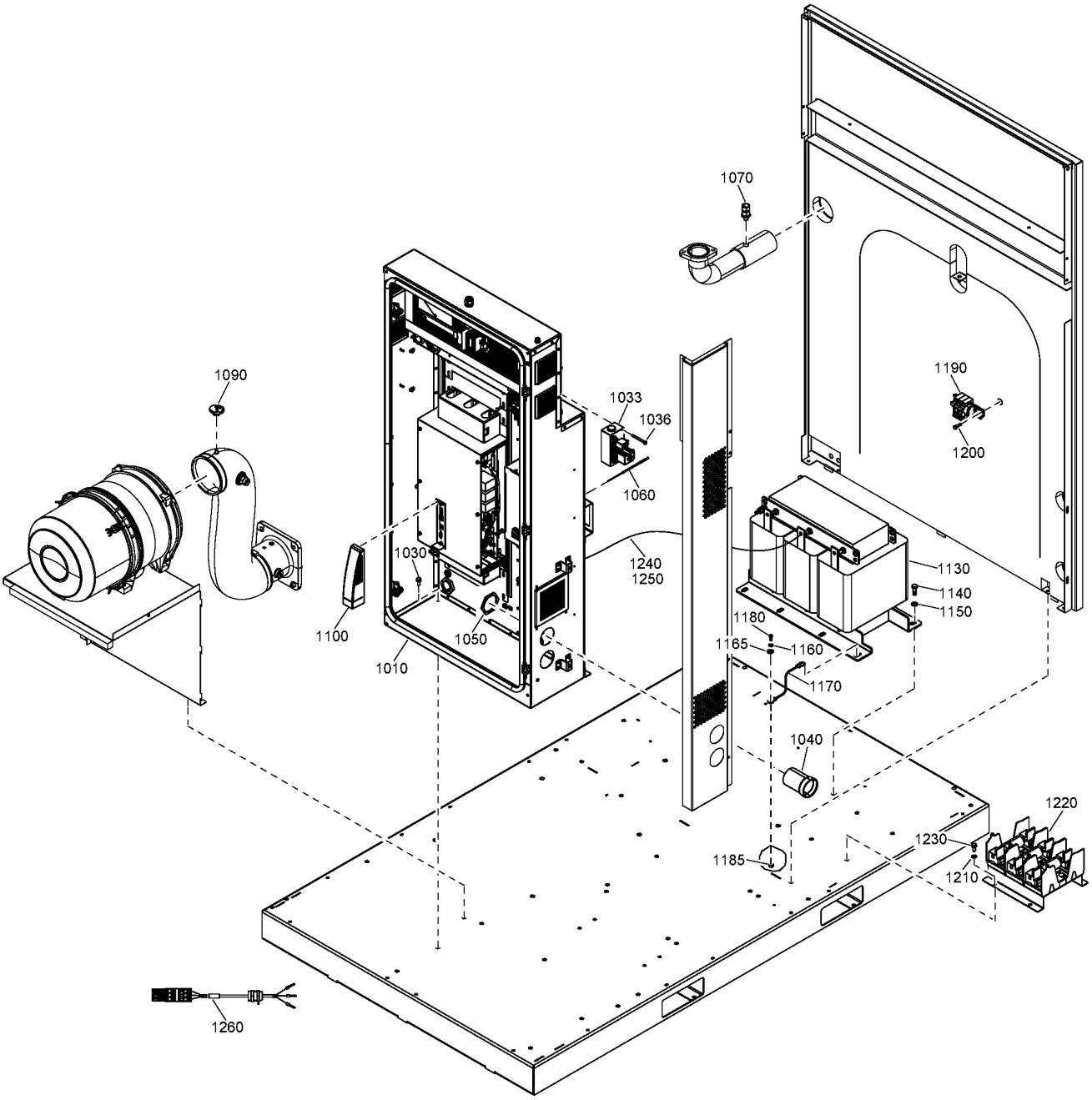

21.4 - Electrical components and cubicle assembly 200V-500V/50Hz, 200V-230V-575V/60Hz - Trafo

((CAPPRE:IEC + CAPPRM:MHLW + MOVOL:200V , CAPPRE:ULCUL + CAPPRM:ASME + FREQ:60HZ + MOVOL:230V) + (MODEL:GA75VP_16 , MODEL:GA90VP_16) , CAPPRE:IEC + CAPPRM:CE + FREQ:50HZ + MOVOL:500V , CAPPRE:ULCUL + CAPPRM:ASME + FREQ:60HZ + MOVOL:575V) + COOL:AIR

Ref	Part Number	Qty	Name	Validity
1250	1649 8002 65	1	CABLE TRAFO	**(06/03/2017 - 19/07/2017)** CAPPRE:ULCUL + CAPPRM:ASME + FREQ:60HZ + IDRY:Y + MODEL:GA110VP_16 + MOVOL:575V **(20/07/2017 - 30/12/2027)** ((CAPPRM:CE + FREQ:50HZ + MOVOL:500V , CAPPRM:MHLW + MOVOL:200V) + CAPPRE:IEC , (MOVOL:230V , MOVOL:575V) + CAPPRE:ULCUL + CAPPRM:ASME + FREQ:60HZ) + MODEL:GA110VP_16 **(31/12/2027 - ...)** (CAPPRE:IEC + CAPPRM:CE + FREQ:50HZ + MOVOL:500V , CAPPRE:ULCUL + CAPPRM:ASME + FREQ:60HZ + MOVOL:575V) + MODEL:GA110VP_16
1250	1649 8003 59	1	POWER CABLE	**(20/07/2017 - ...)** (CAPPRE:IEC + CAPPRM:CE + FREQ:50HZ + MOVOL:500V , CAPPRE:ULCUL + CAPPRM:ASME + FREQ:60HZ + MOVOL:575V) + (MODEL:GA75VP_16 , MODEL:GA90VP_16)
1260	1649 8003 59	1	POWER CABLE	**(06/03/2017 - 19/07/2017)** CAPPRE:ULCUL + CAPPRM:ASME + FREQ:60HZ + IDRY:Y + MODEL:GA110VP_16 + MOVOL:575V **(20/07/2017 - ...)** (CAPPRE:IEC + CAPPRM:CE + FREQ:50HZ + MOVOL:500V , CAPPRE:ULCUL + CAPPRM:ASME + FREQ:60HZ + MOVOL:575V) + MODEL:GA110VP_16
	• 0698 5143 07	1	CABLE GLAND M20	**(11/12/2017 - ...)** (CAPPRE:IEC + CAPPRM:CE + FREQ:50HZ + MOVOL:500V , CAPPRE:ULCUL + CAPPRM:ASME + FREQ:60HZ + MOVOL:575V) + MODEL:GA110VP_16

Legend:

CAPPRE:IEC - Component approval electrical:IEC
CAPPRM:CE - Component approval mechanical:CE
FREQ:50HZ - Frequency:50 Hz
MODEL:GA110VP_16 - Model:GA 110VSD+
MOVOL:200V - Supply voltage:200 V
MOVOL:575V - Supply voltage:575 V
CAPPRE:ULCUL - Component approval electrical:UL/cUL
CAPPRM:MHLW - Component approval mechanical:MHLW
FREQ:60HZ - Frequency:60 Hz
MODEL:GA75VP_16 - Model:GA 75VSD+
MOVOL:230V - Supply voltage:230 V
CAPPRM:ASME - Component approval mechanical:ASME
COOL:AIR - Cooling:Air cooled
IDRY:Y - Integrated dryer:Yes
MODEL:GA90VP_16 - Model:GA 90VSD+
MOVOL:500V - Supply voltage:500 V

21.5 - Cubicle components GA 75L VSD+ - (200V-400V-500V/50Hz - IEC, 200V-380V-460V/60Hz - IEC, 230V-460V-575V/60Hz - UL-cUL) - Pack (20/07/2017 - 11/12/2018)

((((CAPPRM:AS1210 , CAPPRM:CE , CAPPRM:MHLW , CAPPRM:MOM) + MOVOL:400V , CAPPRM:CE + COOL:AIR + MOVOL:500V) + FREQ:50HZ , ((MOVOL:380V , MOVOL:460V) + CAPPRM:ASME , CAPPRM:MHLW + MOVOL:460V) + FREQ:60HZ , CAPPRM:MHLW + COOL:AIR + MOVOL:200V) + CAPPRE:IEC , ((MOVOL:230V , MOVOL:575V) + COOL:AIR , MOVOL:460V) + CAPPRE:ULCUL + CAPPRM:ASME + FREQ:60HZ) + IDRY:N + MODEL:GA75VP_16

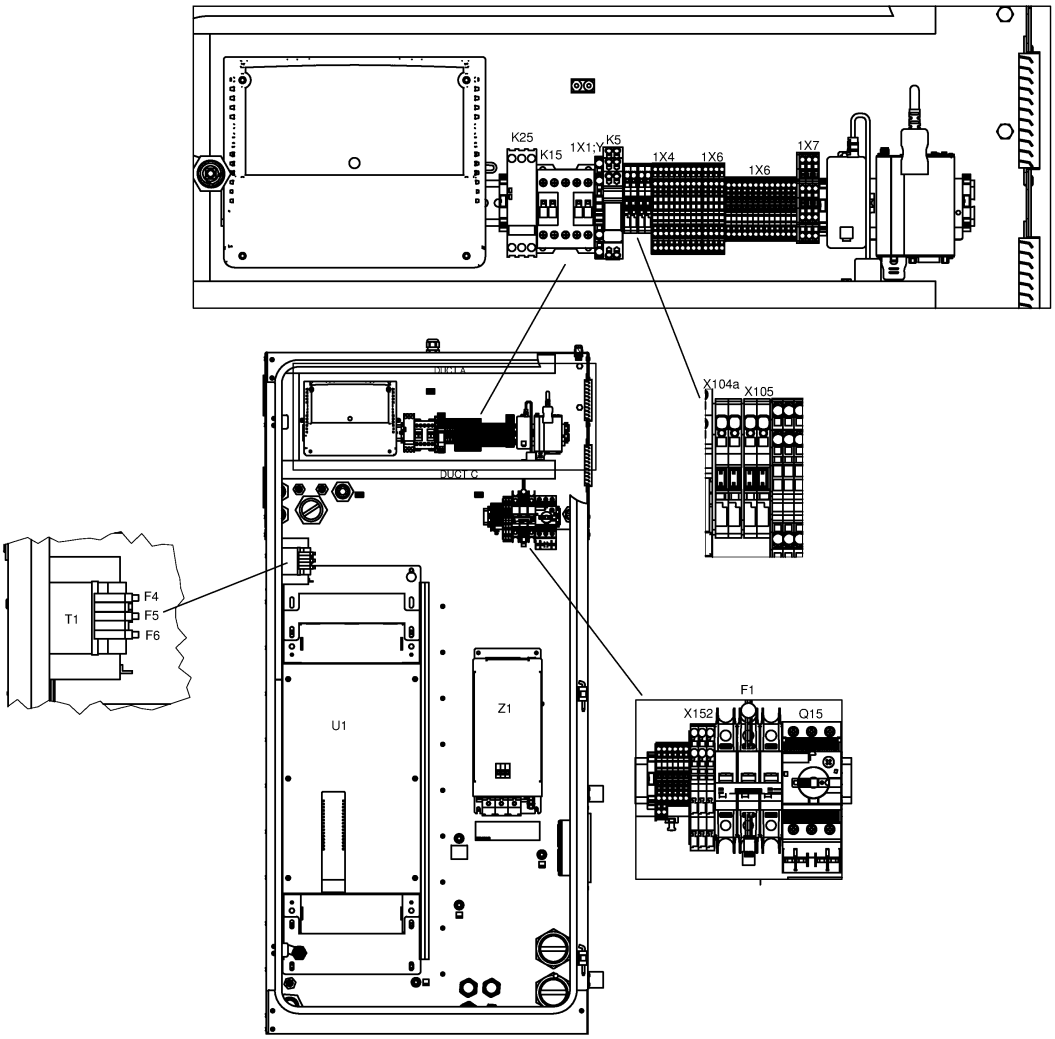

21.5 - Cubicle components GA 75L VSD+ - (200V-400V-500V/50Hz - IEC, 200V-380V-460V/60Hz - IEC, 230V-460V-575V/60Hz - UL-cUL) - Pack (20/07/2017 - 11/12/2018)

((((CAPPRM:AS1210 , CAPPRM:CE , CAPPRM:MHLW , CAPPRM:MOM) + MOVOL:400V , CAPPRM:CE + COOL:AIR + MOVOL:500V) + FREQ:50HZ , ((MOVOL:380V , MOVOL:460V) + CAPPRM:ASME , CAPPRM:MHLW + MOVOL:460V) + FREQ:60HZ , CAPPRM:MHLW + COOL:AIR + MOVOL:200V) + CAPPRE:IEC , ((MOVOL:230V , MOVOL:575V) + COOL:AIR , MOVOL:460V) + CAPPRE:ULCUL + CAPPRM:ASME + FREQ:60HZ) + IDRY:N + MODEL:GA75VP_16

Ref	Part Number	Qty	Name	Validity	EL
	1900 2202 01	1	CUBICLE	**(20/07/2017 - 11/12/2018)**	
	9820 3000 21	-	CUBICLE LAYOUT	**(20/07/2017 - 20/08/2018)** ((((CAPPRM:AS1210 , CAPPRM:CE , CAPPRM:MHLW , CAPPRM:MOM) + MOVOL:400V , CAPPRM:CE + MOVOL:500V , CAPPRM:MHLW + MOVOL:200V) + FREQ:50HZ , ((MOVOL:200V , MOVOL:460V) + CAPPRM:MHLW , (MOVOL:380V , MOVOL:460V) + CAPPRM:ASME) + FREQ:60HZ) + CAPPRE:IEC , (MOVOL:230V , MOVOL:460V , MOVOL:575V) + CAPPRE:ULCUL + CAPPRM:ASME + FREQ:60HZ) + COOL:AIR **(21/08/2018 - 10/12/2018)** **(11/12/2018 - 11/12/2018)** ((((CAPPRM:AS1210 , CAPPRM:CE , CAPPRM:MHLW , CAPPRM:MOM) + MOVOL:400V , (CAPPRM:CE + MOVOL:500V , CAPPRM:MHLW + MOVOL:200V) + COOL:AIR) + FREQ:50HZ , ((CAPPRM:ASME , CAPPRM:MHLW) + COOL:WATER + MOVOL:460V , CAPPRM:ASME + MOVOL:380V , CAPPRM:MHLW + COOL:AIR + MOVOL:200V) + FREQ:60HZ) + CAPPRE:IEC , ((MOVOL:230V , MOVOL:575V) + COOL:AIR , MOVOL:460V) + CAPPRE:ULCUL + CAPPRM:ASME + FREQ:60HZ)	-
	9820 3000 22	-	SERVICE DIAGRAM	**(20/07/2017 - 20/08/2018)** ((((CAPPRM:AS1210 , CAPPRM:CE , CAPPRM:MHLW , CAPPRM:MOM) + MOVOL:400V , CAPPRM:CE + MOVOL:500V , CAPPRM:MHLW + MOVOL:200V) + FREQ:50HZ , ((MOVOL:200V , MOVOL:460V) + CAPPRM:MHLW , (MOVOL:380V , MOVOL:460V) + CAPPRM:ASME) + FREQ:60HZ) + CAPPRE:IEC , (MOVOL:230V , MOVOL:460V , MOVOL:575V) + CAPPRE:ULCUL + CAPPRM:ASME + FREQ:60HZ) + COOL:AIR **(21/08/2018 - 10/12/2018)** **(11/12/2018 - 11/12/2018)** ((((CAPPRM:AS1210 , CAPPRM:CE , CAPPRM:MHLW , CAPPRM:MOM) + MOVOL:400V , (CAPPRM:CE + MOVOL:500V , CAPPRM:MHLW + MOVOL:200V) + COOL:AIR) + FREQ:50HZ , ((CAPPRM:ASME , CAPPRM:MHLW) + COOL:WATER + MOVOL:460V , CAPPRM:ASME + MOVOL:380V , CAPPRM:MHLW + COOL:AIR + MOVOL:200V) + FREQ:60HZ) + CAPPRE:IEC , ((MOVOL:230V , MOVOL:575V) + COOL:AIR , MOVOL:460V) + CAPPRE:ULCUL + CAPPRM:ASME + FREQ:60HZ)	

Legend:

CAPPRE:IEC - Component approval electrical:IEC
CAPPRE:ULCUL - Component approval electrical:UL/cUL
CAPPRM:AS1210 - Component approval mechanical:AS1210
CAPPRM:ASME - Component approval mechanical:ASME
CAPPRM:CE - Component approval mechanical:CE
CAPPRM:MHLW - Component approval mechanical:MHLW
CAPPRM:MOM - Component approval mechanical:MOM
COOL:AIR - Cooling:Air cooled
COOL:WATER - Cooling:Water cooled
FREQ:50HZ - Frequency:50 Hz
FREQ:60HZ - Frequency:60 Hz
IDRY:N - Integrated dryer:No
MODEL:GA75VP_16 - Model:GA 75VSD+
MOVOL:200V - Supply voltage:200 V
MOVOL:230V - Supply voltage:230 V
MOVOL:380V - Supply voltage:380 V
MOVOL:400V - Supply voltage:400 V
MOVOL:460V - Supply voltage:460 V
MOVOL:500V - Supply voltage:500 V
MOVOL:575V - Supply voltage:575 V

21.5 - Cubicle components GA 75L VSD+ - (200V-400V-500V/50Hz - IEC, 200V-380V-460V/60Hz - IEC, 230V-460V-575V/60Hz - UL-cUL) - Pack (20/07/2017 - 11/12/2018)

((((CAPPRM:AS1210 , CAPPRM:CE , CAPPRM:MHLW , CAPPRM:MOM) + MOVOL:400V , CAPPRM:CE + COOL:AIR + MOVOL:500V) + FREQ:50HZ , ((MOVOL:380V , MOVOL:460V) + CAPPRM:ASME , CAPPRM:MHLW + MOVOL:460V) + FREQ:60HZ , CAPPRM:MHLW + COOL:AIR + MOVOL:200V) + CAPPRE:IEC , ((MOVOL:230V , MOVOL:575V) + COOL:AIR , MOVOL:460V) + CAPPRE:ULCUL + CAPPRM:ASME + FREQ:60HZ) + IDRY:N + MODEL:GA75VP_16

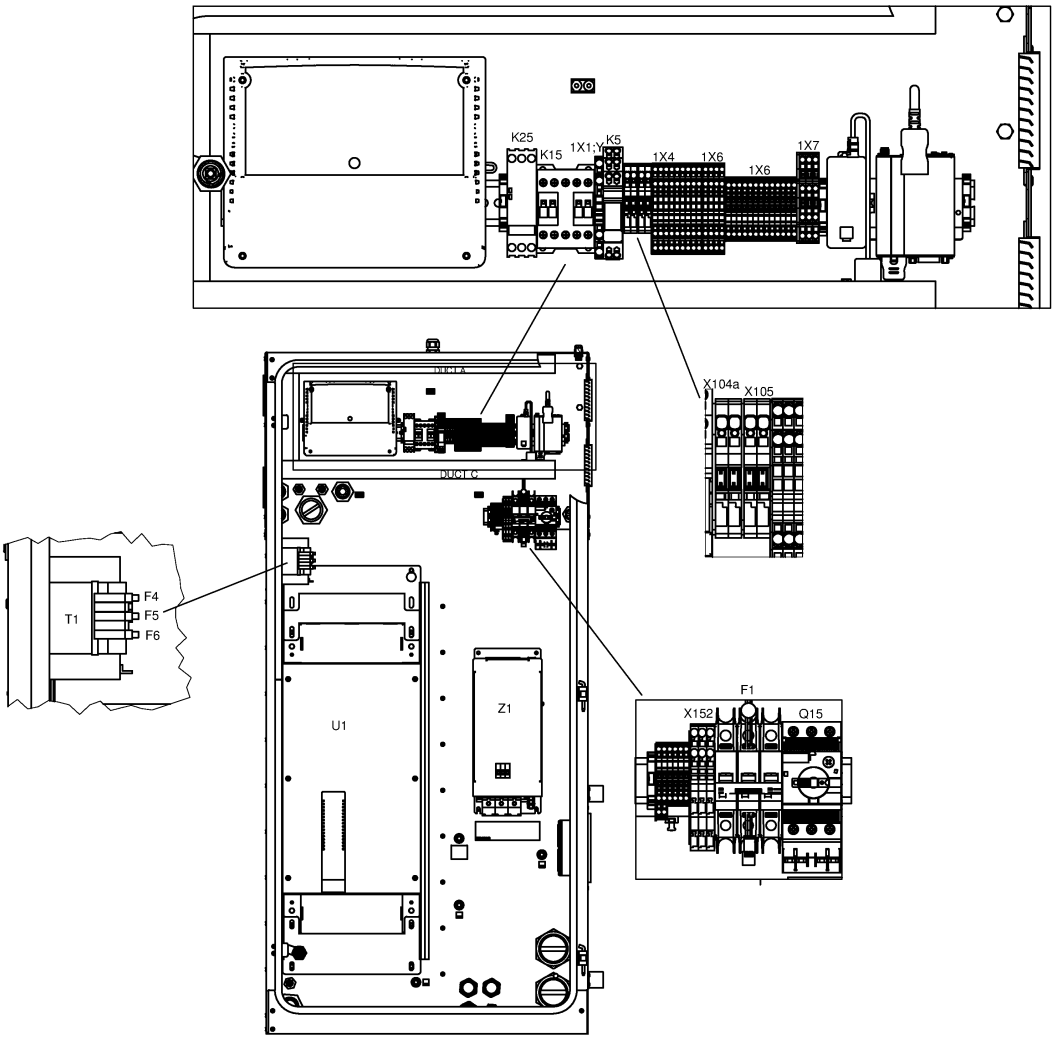

21.5 - Cubicle components GA 75L VSD+ - (200V-400V-500V/50Hz - IEC, 200V-380V-460V/60Hz - IEC, 230V-460V-575V/60Hz - UL-cUL) - Pack (20/07/2017 - 11/12/2018)

((((CAPPRM:AS1210 , CAPPRM:CE , CAPPRM:MHLW , CAPPRM:MOM) + MOVOL:400V , CAPPRM:CE + COOL:AIR + MOVOL:500V) + FREQ:50HZ , ((MOVOL:380V , MOVOL:460V) + CAPPRM:ASME , CAPPRM:MHLW + MOVOL:460V) + FREQ:60HZ , CAPPRM:MHLW + COOL:AIR + MOVOL:200V) + CAPPRE:IEC , ((MOVOL:230V , MOVOL:575V) + COOL:AIR , MOVOL:460V) + CAPPRE:ULCUL + CAPPRM:ASME + FREQ:60HZ) + IDRY:N + MODEL:GA75VP_16

Ref	Part Number	Qty	Name	Validity	EL
	1622 3798 70	1	WIRE HARNESS COMM CABLE	**(20/07/2017 - 20/08/2018)** ((((CAPPRM:AS1210 , CAPPRM:CE , CAPPRM:MHLW , CAPPRM:MOM) + MOVOL:400V , CAPPRM:CE + MOVOL:500V , CAPPRM:MHLW + MOVOL:200V) + FREQ:50HZ , ((MOVOL:200V , MOVOL:460V) + CAPPRM:MHLW , (MOVOL:380V , MOVOL:460V) + CAPPRM:ASME) + FREQ:60HZ) + CAPPRE:IEC , (MOVOL:230V , MOVOL:460V , MOVOL:575V) + CAPPRE:ULCUL + CAPPRM:ASME + FREQ:60HZ) + COOL:AIR **(21/08/2018 - 10/12/2018)** **(11/12/2018 - 11/12/2018)** ((((CAPPRM:AS1210 , CAPPRM:CE , CAPPRM:MHLW , CAPPRM:MOM) + MOVOL:400V , (CAPPRM:CE + MOVOL:500V , CAPPRM:MHLW + MOVOL:200V) + COOL:AIR) + FREQ:50HZ , ((CAPPRM:ASME , CAPPRM:MHLW) + COOL:WATER + MOVOL:460V , CAPPRM:ASME + MOVOL:380V , CAPPRM:MHLW + COOL:AIR + MOVOL:200V) + FREQ:60HZ) + CAPPRE:IEC , ((MOVOL:230V , MOVOL:575V) + COOL:AIR , MOVOL:460V) + CAPPRE:ULCUL + CAPPRM:ASME + FREQ:60HZ)	
	1622 5099 04	1	DI CHANE CABLE (1400MM)	**(20/07/2017 - 20/08/2018)** ((((CAPPRM:AS1210 , CAPPRM:CE , CAPPRM:MHLW , CAPPRM:MOM) + MOVOL:400V , CAPPRM:CE + MOVOL:500V , CAPPRM:MHLW + MOVOL:200V) + FREQ:50HZ , ((MOVOL:200V , MOVOL:460V) + CAPPRM:MHLW , (MOVOL:380V , MOVOL:460V) + CAPPRM:ASME) + FREQ:60HZ) + CAPPRE:IEC , (MOVOL:230V , MOVOL:460V , MOVOL:575V) + CAPPRE:ULCUL + CAPPRM:ASME + FREQ:60HZ) + COOL:AIR **(21/08/2018 - 10/12/2018)** **(11/12/2018 - 11/12/2018)** ((((CAPPRM:AS1210 , CAPPRM:CE , CAPPRM:MHLW , CAPPRM:MOM) + MOVOL:400V , (CAPPRM:CE + MOVOL:500V , CAPPRM:MHLW + MOVOL:200V) + COOL:AIR) + FREQ:50HZ , ((CAPPRM:ASME , CAPPRM:MHLW) + COOL:WATER + MOVOL:460V , CAPPRM:ASME + MOVOL:380V , CAPPRM:MHLW + COOL:AIR + MOVOL:200V) + FREQ:60HZ) + CAPPRE:IEC , ((MOVOL:230V , MOVOL:575V) + COOL:AIR , MOVOL:460V) + CAPPRE:ULCUL + CAPPRM:ASME + FREQ:60HZ)	

Electrical legend: Comm Cable Loose supply

Legend:

CAPPRE:IEC - Component approval electrical:IEC
CAPPRE:ULCUL - Component approval electrical:UL/cUL
CAPPRM:AS1210 - Component approval mechanical:AS1210
CAPPRM:ASME - Component approval mechanical:ASME
CAPPRM:CE - Component approval mechanical:CE
CAPPRM:MHLW - Component approval mechanical:MHLW
CAPPRM:MOM - Component approval mechanical:MOM
COOL:AIR - Cooling:Air cooled
COOL:WATER - Cooling:Water cooled
FREQ:50HZ - Frequency:50 Hz
FREQ:60HZ - Frequency:60 Hz
IDRY:N - Integrated dryer:No
MODEL:GA75VP_16 - Model:GA 75VSD+
MOVOL:200V - Supply voltage:200 V
MOVOL:230V - Supply voltage:230 V
MOVOL:380V - Supply voltage:380 V
MOVOL:400V - Supply voltage:400 V
MOVOL:460V - Supply voltage:460 V
MOVOL:500V - Supply voltage:500 V
MOVOL:575V - Supply voltage:575 V

21.5 - Cubicle components GA 75L VSD+ - (200V-400V-500V/50Hz - IEC, 200V-380V-460V/60Hz - IEC, 230V-460V-575V/60Hz - UL-cUL) - Pack (20/07/2017 - 11/12/2018)

((((CAPPRM:AS1210 , CAPPRM:CE , CAPPRM:MHLW , CAPPRM:MOM) + MOVOL:400V , CAPPRM:CE + COOL:AIR + MOVOL:500V) + FREQ:50HZ , ((MOVOL:380V , MOVOL:460V) + CAPPRM:ASME , CAPPRM:MHLW + MOVOL:460V) + FREQ:60HZ , CAPPRM:MHLW + COOL:AIR + MOVOL:200V) + CAPPRE:IEC , ((MOVOL:230V , MOVOL:575V) + COOL:AIR , MOVOL:460V) + CAPPRE:ULCUL + CAPPRM:ASME + FREQ:60HZ) + IDRY:N + MODEL:GA75VP_16

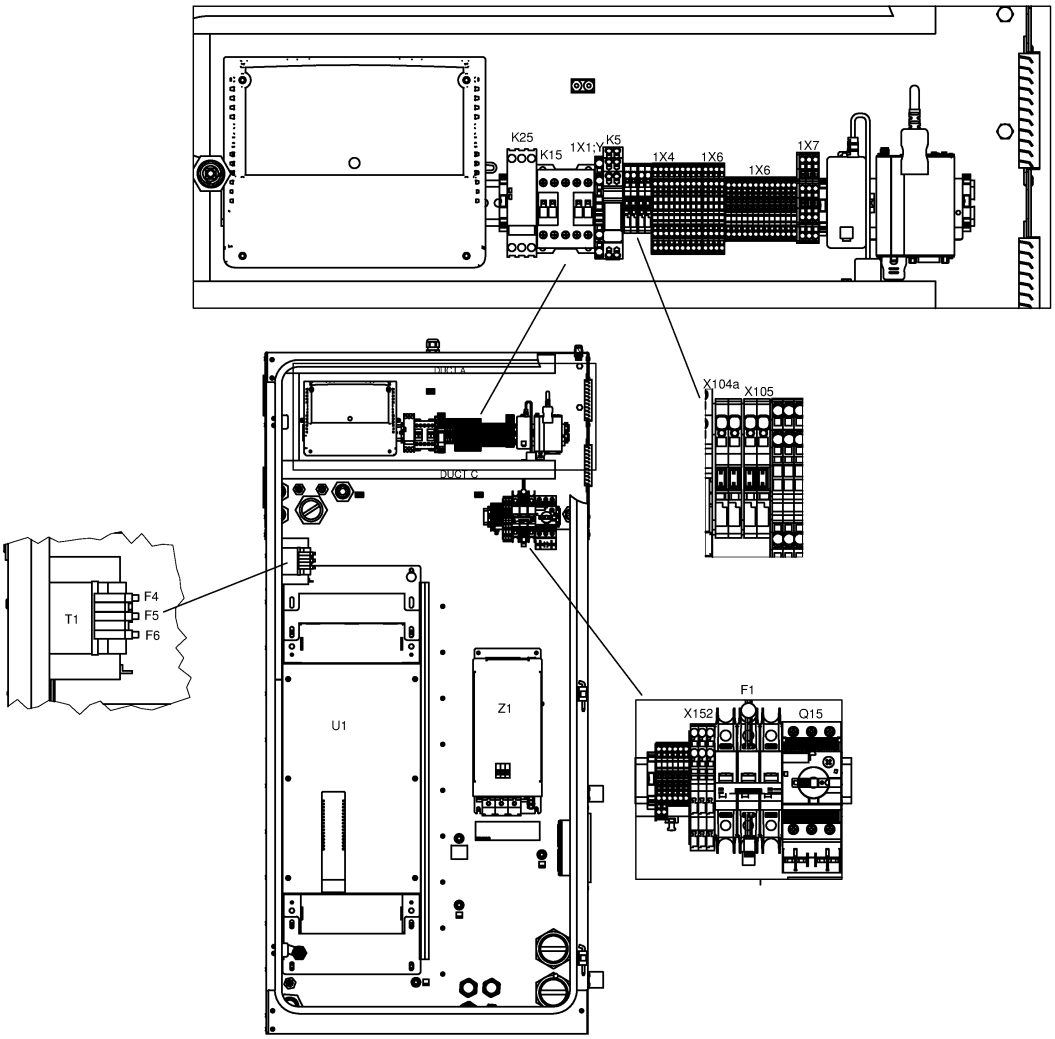

21.5 - Cubicle components GA 75L VSD+ - (200V-400V-500V/50Hz - IEC, 200V-380V-460V/60Hz - IEC, 230V-460V-575V/60Hz - UL-cUL) - Pack (20/07/2017 - 11/12/2018)

((((CAPPRM:AS1210 , CAPPRM:CE , CAPPRM:MHLW , CAPPRM:MOM) + MOVOL:400V , CAPPRM:CE + COOL:AIR + MOVOL:500V) + FREQ:50HZ , ((MOVOL:380V , MOVOL:460V) + CAPPRM:ASME , CAPPRM:MHLW + MOVOL:460V) + FREQ:60HZ , CAPPRM:MHLW + COOL:AIR + MOVOL:200V) + CAPPRE:IEC , ((MOVOL:230V , MOVOL:575V) + COOL:AIR , MOVOL:460V) + CAPPRE:ULCUL + CAPPRM:ASME + FREQ:60HZ) + IDRY:N + MODEL:GA75VP_16

Ref	Part Number	Qty	Name	Validity	EL
	1649 8001 22	1	CUBICLE	**(20/07/2017 - 20/08/2018)** ((((CAPPRM:AS1210 , CAPPRM:CE , CAPPRM:MHLW , CAPPRM:MOM) + MOVOL:400V , CAPPRM:CE + MOVOL:500V , CAPPRM:MHLW + MOVOL:200V) + FREQ:50HZ , ((MOVOL:200V , MOVOL:460V) + CAPPRM:MHLW , (MOVOL:380V , MOVOL:460V) + CAPPRM:ASME) + FREQ:60HZ) + CAPPRE:IEC , (MOVOL:230V , MOVOL:460V , MOVOL:575V) + CAPPRE:ULCUL + CAPPRM:ASME + FREQ:60HZ) + COOL:AIR **(21/08/2018 - 10/12/2018)** **(11/12/2018 - 11/12/2018)** ((((CAPPRM:AS1210 , CAPPRM:CE , CAPPRM:MHLW , CAPPRM:MOM) + MOVOL:400V , (CAPPRM:CE + MOVOL:500V , CAPPRM:MHLW + MOVOL:200V) + COOL:AIR) + FREQ:50HZ , ((CAPPRM:ASME , CAPPRM:MHLW) + COOL:WATER + MOVOL:460V , CAPPRM:ASME + MOVOL:380V , CAPPRM:MHLW + COOL:AIR + MOVOL:200V) + FREQ:60HZ) + CAPPRE:IEC , ((MOVOL:230V , MOVOL:575V) + COOL:AIR , MOVOL:460V) + CAPPRE:ULCUL + CAPPRM:ASME + FREQ:60HZ)	-
•	1202 6584 02	AR	SEAL		-
	1649 8001 32	1	PLATE NEOS "D"	**(20/07/2017 - 20/08/2018)** ((((CAPPRM:AS1210 , CAPPRM:CE , CAPPRM:MHLW , CAPPRM:MOM) + MOVOL:400V , CAPPRM:CE + MOVOL:500V , CAPPRM:MHLW + MOVOL:200V) + FREQ:50HZ , ((MOVOL:200V , MOVOL:460V) + CAPPRM:MHLW , (MOVOL:380V , MOVOL:460V) + CAPPRM:ASME) + FREQ:60HZ) + CAPPRE:IEC , (MOVOL:230V , MOVOL:460V , MOVOL:575V) + CAPPRE:ULCUL + CAPPRM:ASME + FREQ:60HZ) + COOL:AIR **(21/08/2018 - 10/12/2018)** **(11/12/2018 - 11/12/2018)** ((((CAPPRM:AS1210 , CAPPRM:CE , CAPPRM:MHLW , CAPPRM:MOM) + MOVOL:400V , (CAPPRM:CE + MOVOL:500V , CAPPRM:MHLW + MOVOL:200V) + COOL:AIR) + FREQ:50HZ , ((CAPPRM:ASME , CAPPRM:MHLW) + COOL:WATER + MOVOL:460V , CAPPRM:ASME + MOVOL:380V , CAPPRM:MHLW + COOL:AIR + MOVOL:200V) + FREQ:60HZ) + CAPPRE:IEC , ((MOVOL:230V , MOVOL:575V) + COOL:AIR , MOVOL:460V) + CAPPRE:ULCUL + CAPPRM:ASME + FREQ:60HZ)	-

Legend:

CAPPRE:IEC - Component approval electrical:IEC
CAPPRE:ULCUL - Component approval electrical:UL/cUL
CAPPRM:AS1210 - Component approval mechanical:AS1210
CAPPRM:ASME - Component approval mechanical:ASME
CAPPRM:CE - Component approval mechanical:CE
CAPPRM:MHLW - Component approval mechanical:MHLW
CAPPRM:MOM - Component approval mechanical:MOM
COOL:AIR - Cooling:Air cooled
COOL:WATER - Cooling:Water cooled
FREQ:50HZ - Frequency:50 Hz
FREQ:60HZ - Frequency:60 Hz
IDRY:N - Integrated dryer:No
MODEL:GA75VP_16 - Model:GA 75VSD+
MOVOL:200V - Supply voltage:200 V
MOVOL:230V - Supply voltage:230 V
MOVOL:380V - Supply voltage:380 V
MOVOL:400V - Supply voltage:400 V
MOVOL:460V - Supply voltage:460 V
MOVOL:500V - Supply voltage:500 V
MOVOL:575V - Supply voltage:575 V

21.5 - Cubicle components GA 75L VSD+ - (200V-400V-500V/50Hz - IEC, 200V-380V-460V/60Hz - IEC, 230V-460V-575V/60Hz - UL-cUL) - Pack (20/07/2017 - 11/12/2018)

((((CAPPRM:AS1210 , CAPPRM:CE , CAPPRM:MHLW , CAPPRM:MOM) + MOVOL:400V , CAPPRM:CE + COOL:AIR + MOVOL:500V) + FREQ:50HZ , ((MOVOL:380V , MOVOL:460V) + CAPPRM:ASME , CAPPRM:MHLW + MOVOL:460V) + FREQ:60HZ , CAPPRM:MHLW + COOL:AIR + MOVOL:200V) + CAPPRE:IEC , ((MOVOL:230V , MOVOL:575V) + COOL:AIR , MOVOL:460V) + CAPPRE:ULCUL + CAPPRM:ASME + FREQ:60HZ) + IDRY:N + MODEL:GA75VP_16

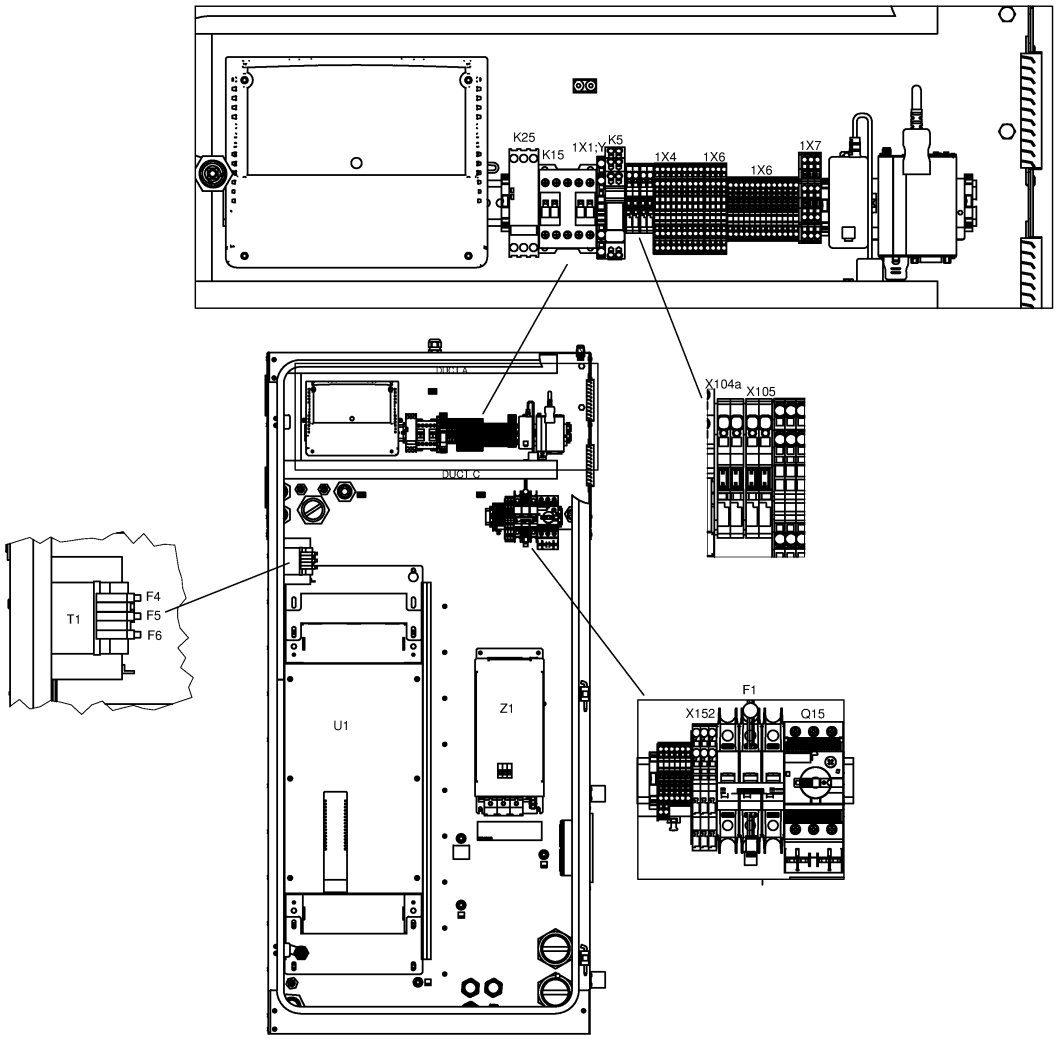

21.5 - Cubicle components GA 75L VSD+ - (200V-400V-500V/50Hz - IEC, 200V-380V-460V/60Hz - IEC, 230V-460V-575V/60Hz - UL-cUL) - Pack (20/07/2017 - 11/12/2018)

((((CAPPRM:AS1210 , CAPPRM:CE , CAPPRM:MHLW , CAPPRM:MOM) + MOVOL:400V , CAPPRM:CE + COOL:AIR + MOVOL:500V) + FREQ:50HZ , ((MOVOL:380V , MOVOL:460V) + CAPPRM:ASME , CAPPRM:MHLW + MOVOL:460V) + FREQ:60HZ , CAPPRM:MHLW + COOL:AIR + MOVOL:200V) + CAPPRE:IEC , ((MOVOL:230V , MOVOL:575V) + COOL:AIR , MOVOL:460V) + CAPPRE:ULCUL + CAPPRM:ASME + FREQ:60HZ) + IDRY:N + MODEL:GA75VP_16

Ref	Part Number	Qty	Name	Validity	EL
	1649 8003 85	1	MOUNTING PLATE	**(20/07/2017 - 20/08/2018)** ((((CAPPRM:AS1210 , CAPPRM:CE , CAPPRM:MHLW , CAPPRM:MOM) + MOVOL:400V , CAPPRM:CE + MOVOL:500V , CAPPRM:MHLW + MOVOL:200V) + FREQ:50HZ , ((MOVOL:200V , MOVOL:460V) + CAPPRM:MHLW , (MOVOL:380V , MOVOL:460V) + CAPPRM:ASME) + FREQ:60HZ) + CAPPRE:IEC , (MOVOL:230V , MOVOL:460V , MOVOL:575V) + CAPPRE:ULCUL + CAPPRM:ASME + FREQ:60HZ) + COOL:AIR **(21/08/2018 - 10/12/2018)** **(11/12/2018 - 11/12/2018)** ((((CAPPRM:AS1210 , CAPPRM:CE , CAPPRM:MHLW , CAPPRM:MOM) + MOVOL:400V , (CAPPRM:CE + MOVOL:500V , CAPPRM:MHLW + MOVOL:200V) + COOL:AIR) + FREQ:50HZ , ((CAPPRM:ASME , CAPPRM:MHLW) + COOL:WATER + MOVOL:460V , CAPPRM:ASME + MOVOL:380V , CAPPRM:MHLW + COOL:AIR + MOVOL:200V) + FREQ:60HZ) + CAPPRE:IEC , ((MOVOL:230V , MOVOL:575V) + COOL:AIR , MOVOL:460V) + CAPPRE:ULCUL + CAPPRM:ASME + FREQ:60HZ)	
	1649 8002 39	1	WIRE HARNESS	**(20/07/2017 - 20/08/2018)** ((((CAPPRM:AS1210 , CAPPRM:CE , CAPPRM:MHLW , CAPPRM:MOM) + MOVOL:400V , CAPPRM:CE + MOVOL:500V , CAPPRM:MHLW + MOVOL:200V) + FREQ:50HZ , ((MOVOL:200V , MOVOL:460V) + CAPPRM:MHLW , (MOVOL:380V , MOVOL:460V) + CAPPRM:ASME) + FREQ:60HZ) + CAPPRE:IEC , (MOVOL:230V , MOVOL:460V , MOVOL:575V) + CAPPRE:ULCUL + CAPPRM:ASME + FREQ:60HZ) + COOL:AIR **(21/08/2018 - 10/12/2018)** **(11/12/2018 - 11/12/2018)** ((((CAPPRM:AS1210 , CAPPRM:CE , CAPPRM:MHLW , CAPPRM:MOM) + MOVOL:400V , (CAPPRM:CE + MOVOL:500V , CAPPRM:MHLW + MOVOL:200V) + COOL:AIR) + FREQ:50HZ , ((CAPPRM:ASME , CAPPRM:MHLW) + COOL:WATER + MOVOL:460V , CAPPRM:ASME + MOVOL:380V , CAPPRM:MHLW + COOL:AIR + MOVOL:200V) + FREQ:60HZ) + CAPPRE:IEC , ((MOVOL:230V , MOVOL:575V) + COOL:AIR , MOVOL:460V) + CAPPRE:ULCUL + CAPPRM:ASME + FREQ:60HZ)	
	Electrical legend:		Pressure switch (vessel) + pressure sensor + pressure sensor outlet		
•	0698 5140 74	1	CABLE GLAND		

Legend:

CAPPRE:IEC - Component approval electrical:IEC	CAPPRE:ULCUL - Component approval electrical:UL/cUL	CAPPRM:AS1210 - Component approval mechanical:AS1210
CAPPRM:ASME - Component approval mechanical:ASME	CAPPRM:CE - Component approval mechanical:CE	CAPPRM:MHLW - Component approval mechanical:MHLW
CAPPRM:MOM - Component approval mechanical:MOM	COOL:AIR - Cooling:Air cooled	COOL:WATER - Cooling:Water cooled
FREQ:50HZ - Frequency:50 Hz	FREQ:60HZ - Frequency:60 Hz	IDRY:N - Integrated dryer:No
MODEL:GA75VP_16 - Model:GA 75VSD+	MOVOL:200V - Supply voltage:200 V	MOVOL:230V - Supply voltage:230 V
MOVOL:380V - Supply voltage:380 V	MOVOL:400V - Supply voltage:400 V	MOVOL:460V - Supply voltage:460 V
MOVOL:500V - Supply voltage:500 V	MOVOL:575V - Supply voltage:575 V	

21.5 - Cubicle components GA 75L VSD+ - (200V-400V-500V/50Hz - IEC, 200V-380V-460V/60Hz - IEC, 230V-460V-575V/60Hz - UL-cUL) - Pack (20/07/2017 - 11/12/2018)

((((CAPPRM:AS1210 , CAPPRM:CE , CAPPRM:MHLW , CAPPRM:MOM) + MOVOL:400V , CAPPRM:CE + COOL:AIR + MOVOL:500V) + FREQ:50HZ , ((MOVOL:380V , MOVOL:460V) + CAPPRM:ASME , CAPPRM:MHLW + MOVOL:460V) + FREQ:60HZ , CAPPRM:MHLW + COOL:AIR + MOVOL:200V) + CAPPRE:IEC , ((MOVOL:230V , MOVOL:575V) + COOL:AIR , MOVOL:460V) + CAPPRE:ULCUL + CAPPRM:ASME + FREQ:60HZ) + IDRY:N + MODEL:GA75VP_16

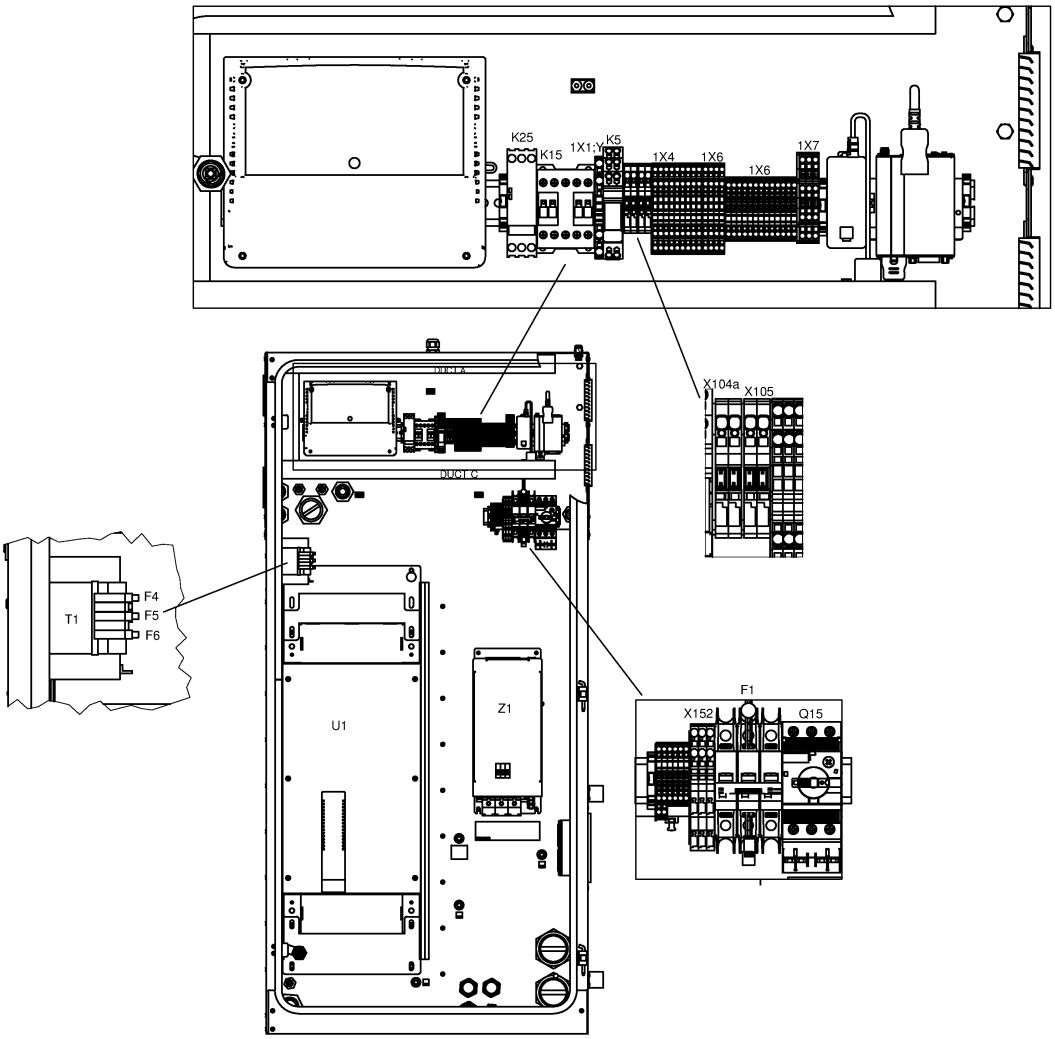

Ref	Part Number	Qty	Name	Validity	EL
	1649 8002 40	1	WIRE HARNESS	**(20/07/2017 - 20/08/2018)** ((((CAPPRM:AS1210 , CAPPRM:CE , CAPPRM:MHLW , CAPPRM:MOM) + MOVOL:400V , CAPPRM:CE + MOVOL:500V , CAPPRM:MHLW + MOVOL:200V) + FREQ:50HZ , ((MOVOL:200V , MOVOL:460V) + CAPPRM:MHLW , (MOVOL:380V , MOVOL:460V) + CAPPRM:ASME) + FREQ:60HZ) + CAPPRE:IEC , (MOVOL:230V , MOVOL:460V , MOVOL:575V) + CAPPRE:ULCUL + CAPPRM:ASME + FREQ:60HZ) + COOL:AIR **(21/08/2018 - 10/12/2018)** **(11/12/2018 - 11/12/2018)** ((((CAPPRM:AS1210 , CAPPRM:CE , CAPPRM:MHLW , CAPPRM:MOM) + MOVOL:400V , (CAPPRM:CE + MOVOL:500V , CAPPRM:MHLW + MOVOL:200V) + COOL:AIR) + FREQ:50HZ , ((CAPPRM:ASME , CAPPRM:MHLW) + COOL:WATER + MOVOL:460V , CAPPRM:ASME + MOVOL:380V , CAPPRM:MHLW + COOL:AIR + MOVOL:200V) + FREQ:60HZ) + CAPPRE:IEC , ((MOVOL:230V , MOVOL:575V) + COOL:AIR , MOVOL:460V) + CAPPRE:ULCUL + CAPPRM:ASME + FREQ:60HZ)	
	Electrical legend:		Temperature sensor element outlet + solenoids + ambient sensor		
•	0698 5140 74	1	CABLE GLAND		
	1649 8002 73	1	WIRE HARNESS	**(20/07/2017 - 20/08/2018)** ((((CAPPRM:AS1210 , CAPPRM:CE , CAPPRM:MHLW , CAPPRM:MOM) + MOVOL:400V , CAPPRM:CE + MOVOL:500V , CAPPRM:MHLW + MOVOL:200V) + FREQ:50HZ , ((MOVOL:200V , MOVOL:460V) + CAPPRM:MHLW , (MOVOL:380V , MOVOL:460V) + CAPPRM:ASME) + FREQ:60HZ) + CAPPRE:IEC , (MOVOL:230V , MOVOL:460V , MOVOL:575V) + CAPPRE:ULCUL + CAPPRM:ASME + FREQ:60HZ) + COOL:AIR **(21/08/2018 - 10/12/2018)** **(11/12/2018 - 11/12/2018)** ((((CAPPRM:AS1210 , CAPPRM:CE , CAPPRM:MHLW , CAPPRM:MOM) + MOVOL:400V , (CAPPRM:CE + MOVOL:500V , CAPPRM:MHLW + MOVOL:200V) + COOL:AIR) + FREQ:50HZ , ((CAPPRM:ASME , CAPPRM:MHLW) + COOL:WATER + MOVOL:460V , CAPPRM:ASME + MOVOL:380V , CAPPRM:MHLW + COOL:AIR + MOVOL:200V) + FREQ:60HZ) + CAPPRE:IEC , ((MOVOL:230V , MOVOL:575V) + COOL:AIR , MOVOL:460V) + CAPPRE:ULCUL + CAPPRM:ASME + FREQ:60HZ)	
	Electrical legend:		Pack Drain + Air filter switch		
•	0698 5140 74	1	CABLE GLAND		

Legend:

CAPPRE:IEC - Component approval electrical:IEC
CAPPRE:ULCUL - Component approval electrical:UL/cUL
CAPPRM:AS1210 - Component approval mechanical:AS1210
CAPPRM:ASME - Component approval mechanical:ASME
CAPPRM:CE - Component approval mechanical:CE
CAPPRM:MHLW - Component approval mechanical:MHLW
CAPPRM:MOM - Component approval mechanical:MOM
COOL:AIR - Cooling:Air cooled
COOL:WATER - Cooling:Water cooled
FREQ:50HZ - Frequency:50 Hz
FREQ:60HZ - Frequency:60 Hz
IDRY:N - Integrated dryer:No
MODEL:GA75VP_16 - Model:GA 75VSD+
MOVOL:200V - Supply voltage:200 V
MOVOL:230V - Supply voltage:230 V
MOVOL:380V - Supply voltage:380 V
MOVOL:400V - Supply voltage:400 V
MOVOL:460V - Supply voltage:460 V
MOVOL:500V - Supply voltage:500 V
MOVOL:575V - Supply voltage:575 V

21.5 - Cubicle components GA 75L VSD+ - (200V-400V-500V/50Hz - IEC, 200V-380V-460V/60Hz - IEC, 230V-460V-575V/60Hz - UL-cUL) - Pack (20/07/2017 - 11/12/2018)

((((CAPPRM:AS1210 , CAPPRM:CE , CAPPRM:MHLW , CAPPRM:MOM) + MOVOL:400V , CAPPRM:CE + COOL:AIR + MOVOL:500V) + FREQ:50HZ , ((MOVOL:380V , MOVOL:460V) + CAPPRM:ASME , CAPPRM:MHLW + MOVOL:460V) + FREQ:60HZ , CAPPRM:MHLW + COOL:AIR + MOVOL:200V) + CAPPRE:IEC , ((MOVOL:230V , MOVOL:575V) + COOL:AIR , MOVOL:460V) + CAPPRE:ULCUL + CAPPRM:ASME + FREQ:60HZ) + IDRY:N + MODEL:GA75VP_16

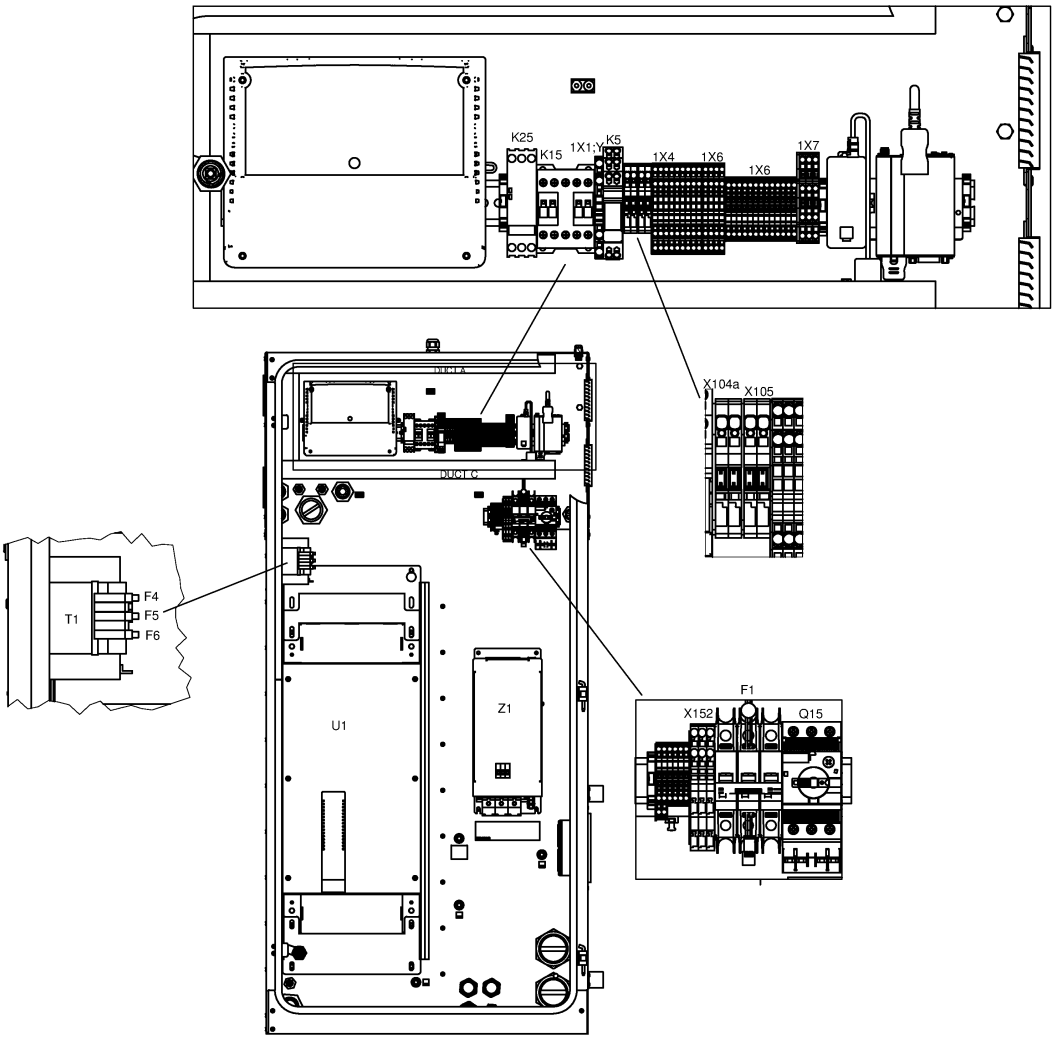

21.5 - Cubicle components GA 75L VSD+ - (200V-400V-500V/50Hz - IEC, 200V-380V-460V/60Hz - IEC, 230V-460V-575V/60Hz - UL-cUL) - Pack (20/07/2017 - 11/12/2018)

((((CAPPRM:AS1210 , CAPPRM:CE , CAPPRM:MHLW , CAPPRM:MOM) + MOVOL:400V , CAPPRM:CE + COOL:AIR + MOVOL:500V) + FREQ:50HZ , ((MOVOL:380V , MOVOL:460V) + CAPPRM:ASME , CAPPRM:MHLW + MOVOL:460V) + FREQ:60HZ , CAPPRM:MHLW + COOL:AIR + MOVOL:200V) + CAPPRE:IEC , ((MOVOL:230V , MOVOL:575V) + COOL:AIR , MOVOL:460V) + CAPPRE:ULCUL + CAPPRM:ASME + FREQ:60HZ) + IDRY:N + MODEL:GA75VP_16

Ref	Part Number	Qty	Name	Validity	EL
	1649 8002 75	1	WIRE HARNESS	**(20/07/2017 - 20/08/2018)** ((((CAPPRM:AS1210 , CAPPRM:CE , CAPPRM:MHLW , CAPPRM:MOM) + MOVOL:400V , CAPPRM:CE + MOVOL:500V , CAPPRM:MHLW + MOVOL:200V) + FREQ:50HZ , ((MOVOL:200V , MOVOL:460V) + CAPPRM:MHLW , (MOVOL:380V , MOVOL:460V) + CAPPRM:ASME) + FREQ:60HZ) + CAPPRE:IEC , (MOVOL:230V , MOVOL:460V , MOVOL:575V) + CAPPRE:ULCUL + CAPPRM:ASME + FREQ:60HZ) + COOL:AIR **(21/08/2018 - 10/12/2018)** **(11/12/2018 - 11/12/2018)** ((((CAPPRM:AS1210 , CAPPRM:CE , CAPPRM:MHLW , CAPPRM:MOM) + MOVOL:400V , (CAPPRM:CE + MOVOL:500V , CAPPRM:MHLW + MOVOL:200V) + COOL:AIR) + FREQ:50HZ , ((CAPPRM:ASME , CAPPRM:MHLW) + COOL:WATER + MOVOL:460V , CAPPRM:ASME + MOVOL:380V , CAPPRM:MHLW + COOL:AIR + MOVOL:200V) + FREQ:60HZ) + CAPPRE:IEC , ((MOVOL:230V , MOVOL:575V) + COOL:AIR , MOVOL:460V) + CAPPRE:ULCUL + CAPPRM:ASME + FREQ:60HZ)	
	Electrical legend:	Relative Humidity sensor			
•	~~1089 9320 09~~	1	RH SENSOR		
	Substituted by:	1089 9320 10 - TEMP. SENSOR (quantity: 1)			
•	0698 5140 75	1	CABLE GLAND		
	1649 8001 45	3	MOTOR CABLE	**(20/07/2017 - 20/08/2018)** ((((CAPPRM:AS1210 , CAPPRM:CE , CAPPRM:MHLW , CAPPRM:MOM) + MOVOL:400V , CAPPRM:CE + MOVOL:500V , CAPPRM:MHLW + MOVOL:200V) + FREQ:50HZ , ((MOVOL:200V , MOVOL:460V) + CAPPRM:MHLW , (MOVOL:380V , MOVOL:460V) + CAPPRM:ASME) + FREQ:60HZ) + CAPPRE:IEC , (MOVOL:230V , MOVOL:460V , MOVOL:575V) + CAPPRE:ULCUL + CAPPRM:ASME + FREQ:60HZ) + COOL:AIR **(21/08/2018 - 10/12/2018)** **(11/12/2018 - 11/12/2018)** ((((CAPPRM:AS1210 , CAPPRM:CE , CAPPRM:MHLW , CAPPRM:MOM) + MOVOL:400V , (CAPPRM:CE + MOVOL:500V , CAPPRM:MHLW + MOVOL:200V) + COOL:AIR) + FREQ:50HZ , ((CAPPRM:ASME , CAPPRM:MHLW) + COOL:WATER + MOVOL:460V , CAPPRM:ASME + MOVOL:380V , CAPPRM:MHLW + COOL:AIR + MOVOL:200V) + FREQ:60HZ) + CAPPRE:IEC , ((MOVOL:230V , MOVOL:575V) + COOL:AIR , MOVOL:460V) + CAPPRE:ULCUL + CAPPRM:ASME + FREQ:60HZ)	

Legend:

CAPPRE:IEC - Component approval electrical:IEC
CAPPRE:ULCUL - Component approval electrical:UL/cUL
CAPPRM:AS1210 - Component approval mechanical:AS1210
CAPPRM:ASME - Component approval mechanical:ASME
CAPPRM:CE - Component approval mechanical:CE
CAPPRM:MHLW - Component approval mechanical:MHLW
CAPPRM:MOM - Component approval mechanical:MOM
COOL:AIR - Cooling:Air cooled
COOL:WATER - Cooling:Water cooled
FREQ:50HZ - Frequency:50 Hz
FREQ:60HZ - Frequency:60 Hz
IDRY:N - Integrated dryer:No
MODEL:GA75VP_16 - Model:GA 75VSD+
MOVOL:200V - Supply voltage:200 V
MOVOL:230V - Supply voltage:230 V
MOVOL:380V - Supply voltage:380 V
MOVOL:400V - Supply voltage:400 V
MOVOL:460V - Supply voltage:460 V
MOVOL:500V - Supply voltage:500 V
MOVOL:575V - Supply voltage:575 V

21.5 - Cubicle components GA 75L VSD+ - (200V-400V-500V/50Hz - IEC, 200V-380V-460V/60Hz - IEC, 230V-460V-575V/60Hz - UL-cUL) - Pack (20/07/2017 - 11/12/2018)

((((CAPPRM:AS1210 , CAPPRM:CE , CAPPRM:MHLW , CAPPRM:MOM) + MOVOL:400V , CAPPRM:CE + COOL:AIR + MOVOL:500V) + FREQ:50HZ , ((MOVOL:380V , MOVOL:460V) + CAPPRM:ASME , CAPPRM:MHLW + MOVOL:460V) + FREQ:60HZ , CAPPRM:MHLW + COOL:AIR + MOVOL:200V) + CAPPRE:IEC , ((MOVOL:230V , MOVOL:575V) + COOL:AIR , MOVOL:460V) + CAPPRE:ULCUL + CAPPRM:ASME + FREQ:60HZ) + IDRY:N + MODEL:GA75VP_16

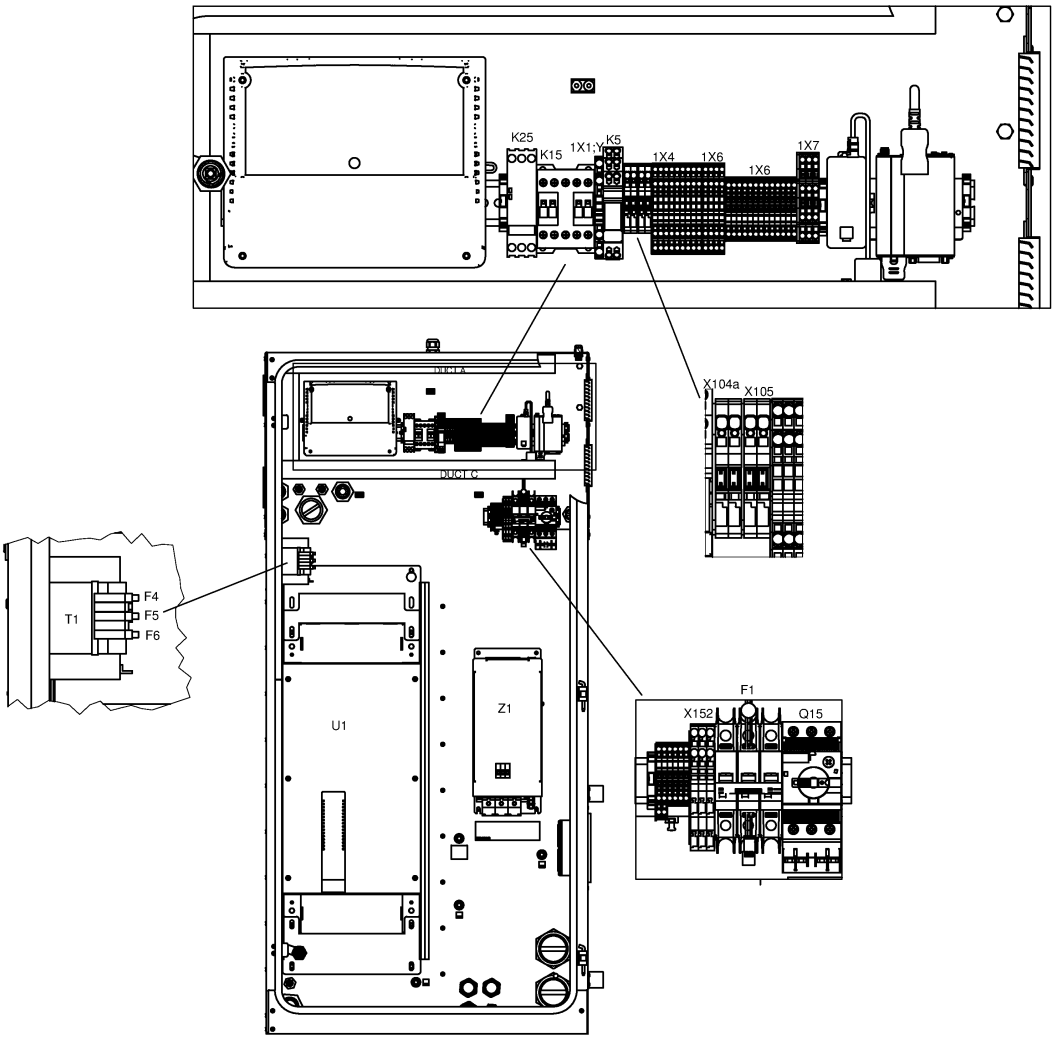

21.5 - Cubicle components GA 75L VSD+ - (200V-400V-500V/50Hz - IEC, 200V-380V-460V/60Hz - IEC, 230V-460V-575V/60Hz - UL-cUL) - Pack (20/07/2017 - 11/12/2018)

((((CAPPRM:AS1210 , CAPPRM:CE , CAPPRM:MHLW , CAPPRM:MOM) + MOVOL:400V , CAPPRM:CE + COOL:AIR + MOVOL:500V) + FREQ:50HZ , ((MOVOL:380V , MOVOL:460V) + CAPPRM:ASME , CAPPRM:MHLW + MOVOL:460V) + FREQ:60HZ , CAPPRM:MHLW + COOL:AIR + MOVOL:200V) + CAPPRE:IEC , ((MOVOL:230V , MOVOL:575V) + COOL:AIR , MOVOL:460V) + CAPPRE:ULCUL + CAPPRM:ASME + FREQ:60HZ) + IDRY:N + MODEL:GA75VP_16

Ref	Part Number	Qty	Name	Validity	EL
	1649 8001 48	1	MOTOR CABLE	**(20/07/2017 - 20/08/2018)** ((((CAPPRM:AS1210 , CAPPRM:CE , CAPPRM:MHLW , CAPPRM:MOM) + MOVOL:400V , CAPPRM:CE + MOVOL:500V , CAPPRM:MHLW + MOVOL:200V) + FREQ:50HZ , ((MOVOL:200V , MOVOL:460V) + CAPPRM:MHLW , (MOVOL:380V , MOVOL:460V) + CAPPRM:ASME) + FREQ:60HZ) + CAPPRE:IEC , (MOVOL:230V , MOVOL:460V , MOVOL:575V) + CAPPRE:ULCUL + CAPPRM:ASME + FREQ:60HZ) + COOL:AIR **(21/08/2018 - 10/12/2018)** **(11/12/2018 - 11/12/2018)** ((((CAPPRM:AS1210 , CAPPRM:CE , CAPPRM:MHLW , CAPPRM:MOM) + MOVOL:400V , (CAPPRM:CE + MOVOL:500V , CAPPRM:MHLW + MOVOL:200V) + COOL:AIR) + FREQ:50HZ , ((CAPPRM:ASME , CAPPRM:MHLW) + COOL:WATER + MOVOL:460V , CAPPRM:ASME + MOVOL:380V , CAPPRM:MHLW + COOL:AIR + MOVOL:200V) + FREQ:60HZ) + CAPPRE:IEC , ((MOVOL:230V , MOVOL:575V) + COOL:AIR , MOVOL:460V) + CAPPRE:ULCUL + CAPPRM:ASME + FREQ:60HZ)	
		1	DATA LABEL	**(02/02/2018 - 20/08/2018)** ((((CAPPRM:AS1210 , CAPPRM:CE , CAPPRM:MHLW , CAPPRM:MOM) + MOVOL:400V , CAPPRM:CE + MOVOL:500V , CAPPRM:MHLW + MOVOL:200V) + FREQ:50HZ , ((MOVOL:200V , MOVOL:460V) + CAPPRM:MHLW , (MOVOL:380V , MOVOL:460V) + CAPPRM:ASME) + FREQ:60HZ) + CAPPRE:IEC , (MOVOL:230V , MOVOL:460V , MOVOL:575V) + CAPPRE:ULCUL + CAPPRM:ASME + FREQ:60HZ) + COOL:AIR **(21/08/2018 - 10/12/2018)** **(11/12/2018 - 11/12/2018)** ((((CAPPRM:AS1210 , CAPPRM:CE , CAPPRM:MHLW , CAPPRM:MOM) + MOVOL:400V , (CAPPRM:CE + MOVOL:500V , CAPPRM:MHLW + MOVOL:200V) + COOL:AIR) + FREQ:50HZ , ((CAPPRM:ASME , CAPPRM:MHLW) + COOL:WATER + MOVOL:460V , CAPPRM:ASME + MOVOL:380V , CAPPRM:MHLW + COOL:AIR + MOVOL:200V) + FREQ:60HZ) + CAPPRE:IEC , ((MOVOL:230V , MOVOL:575V) + COOL:AIR , MOVOL:460V) + CAPPRE:ULCUL + CAPPRM:ASME + FREQ:60HZ)	
		1	DATA LABEL	**(20/07/2017 - 01/02/2018)** ((((CAPPRM:AS1210 , CAPPRM:CE , CAPPRM:MHLW , CAPPRM:MOM) + MOVOL:400V , CAPPRM:CE + MOVOL:500V , CAPPRM:MHLW + MOVOL:200V) + FREQ:50HZ , ((MOVOL:200V , MOVOL:460V) + CAPPRM:MHLW , (MOVOL:380V , MOVOL:460V) + CAPPRM:ASME) + FREQ:60HZ) + CAPPRE:IEC , (MOVOL:230V , MOVOL:460V , MOVOL:575V) + CAPPRE:ULCUL + CAPPRM:ASME + FREQ:60HZ) + COOL:AIR	

Legend:

CAPPRE:IEC - Component approval electrical:IEC
CAPPRE:ULCUL - Component approval electrical:UL/cUL
CAPPRM:AS1210 - Component approval mechanical:AS1210
CAPPRM:ASME - Component approval mechanical:ASME
CAPPRM:CE - Component approval mechanical:CE
CAPPRM:MHLW - Component approval mechanical:MHLW
CAPPRM:MOM - Component approval mechanical:MOM
COOL:AIR - Cooling:Air cooled
COOL:WATER - Cooling:Water cooled
FREQ:50HZ - Frequency:50 Hz
FREQ:60HZ - Frequency:60 Hz
IDRY:N - Integrated dryer:No
MODEL:GA75VP_16 - Model:GA 75VSD+
MOVOL:200V - Supply voltage:200 V
MOVOL:230V - Supply voltage:230 V
MOVOL:380V - Supply voltage:380 V
MOVOL:400V - Supply voltage:400 V
MOVOL:460V - Supply voltage:460 V
MOVOL:500V - Supply voltage:500 V
MOVOL:575V - Supply voltage:575 V

21.5 - Cubicle components GA 75L VSD+ - (200V-400V-500V/50Hz - IEC, 200V-380V-460V/60Hz - IEC, 230V-460V-575V/60Hz - UL-cUL) - Pack (20/07/2017 - 11/12/2018)

((((CAPPRM:AS1210 , CAPPRM:CE , CAPPRM:MHLW , CAPPRM:MOM) + MOVOL:400V , CAPPRM:CE + COOL:AIR + MOVOL:500V) + FREQ:50HZ , ((MOVOL:380V , MOVOL:460V) + CAPPRM:ASME , CAPPRM:MHLW + MOVOL:460V) + FREQ:60HZ , CAPPRM:MHLW + COOL:AIR + MOVOL:200V) + CAPPRE:IEC , ((MOVOL:230V , MOVOL:575V) + COOL:AIR , MOVOL:460V) + CAPPRE:ULCUL + CAPPRM:ASME + FREQ:60HZ) + IDRY:N + MODEL:GA75VP_16

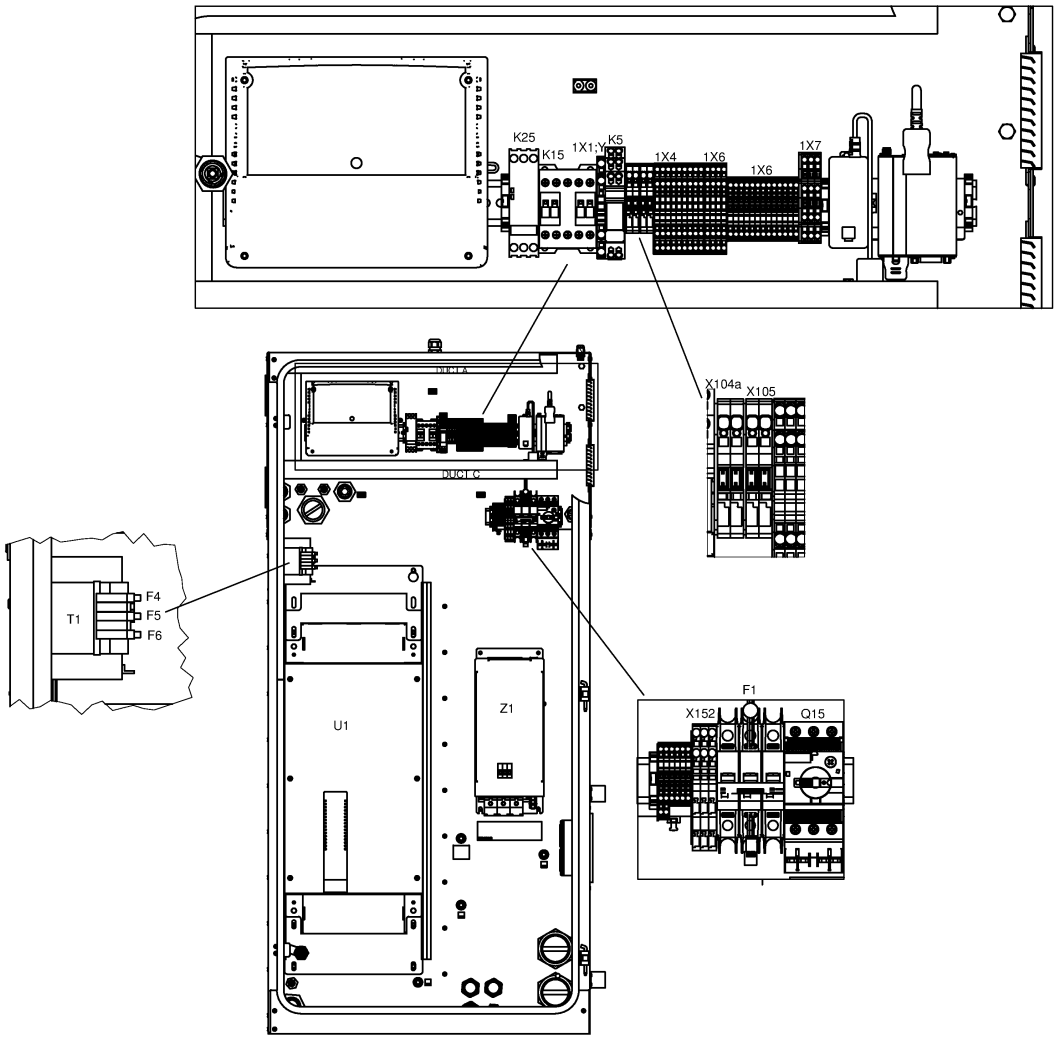

21.5 - Cubicle components GA 75L VSD+ - (200V-400V-500V/50Hz - IEC, 200V-380V-460V/60Hz - IEC, 230V-460V-575V/60Hz - UL-cUL) - Pack (20/07/2017 - 11/12/2018)

((((CAPPRM:AS1210 , CAPPRM:CE , CAPPRM:MHLW , CAPPRM:MOM) + MOVOL:400V , CAPPRM:CE + COOL:AIR + MOVOL:500V) + FREQ:50HZ , ((MOVOL:380V , MOVOL:460V) + CAPPRM:ASME , CAPPRM:MHLW + MOVOL:460V) + FREQ:60HZ , CAPPRM:MHLW + COOL:AIR + MOVOL:200V) + CAPPRE:IEC , ((MOVOL:230V , MOVOL:575V) + COOL:AIR , MOVOL:460V) + CAPPRE:ULCUL + CAPPRM:ASME + FREQ:60HZ) + IDRY:N + MODEL:GA75VP_16

Ref	Part Number	Qty	Name	Validity	EL
	1079 9901 68	1	WARNING LABEL	**(20/07/2017 - 20/08/2018)** ((((CAPPRM:AS1210 , CAPPRM:CE , CAPPRM:MHLW , CAPPRM:MOM) + MOVOL:400V , CAPPRM:CE + MOVOL:500V , CAPPRM:MHLW + MOVOL:200V) + FREQ:50HZ , ((MOVOL:200V , MOVOL:460V) + CAPPRM:MHLW , (MOVOL:380V , MOVOL:460V) + CAPPRM:ASME) + FREQ:60HZ) + CAPPRE:IEC , (MOVOL:230V , MOVOL:460V , MOVOL:575V) + CAPPRE:ULCUL + CAPPRM:ASME + FREQ:60HZ) + COOL:AIR **(21/08/2018 - 10/12/2018)** **(11/12/2018 - 11/12/2018)** ((((CAPPRM:AS1210 , CAPPRM:CE , CAPPRM:MHLW , CAPPRM:MOM) + MOVOL:400V , (CAPPRM:CE + MOVOL:500V , CAPPRM:MHLW + MOVOL:200V) + COOL:AIR) + FREQ:50HZ , ((CAPPRM:ASME , CAPPRM:MHLW) + COOL:WATER + MOVOL:460V , CAPPRM:ASME + MOVOL:380V , CAPPRM:MHLW + COOL:AIR + MOVOL:200V) + FREQ:60HZ) + CAPPRE:IEC , ((MOVOL:230V , MOVOL:575V) + COOL:AIR , MOVOL:460V) + CAPPRE:ULCUL + CAPPRM:ASME + FREQ:60HZ)	-
	1900 5350 15	1	INVERTER	**(20/07/2017 - 20/08/2018)** ((((CAPPRM:AS1210 , CAPPRM:CE , CAPPRM:MHLW , CAPPRM:MOM) + MOVOL:400V , CAPPRM:CE + MOVOL:500V , CAPPRM:MHLW + MOVOL:200V) + FREQ:50HZ , ((MOVOL:200V , MOVOL:460V) + CAPPRM:MHLW , (MOVOL:380V , MOVOL:460V) + CAPPRM:ASME) + FREQ:60HZ) + CAPPRE:IEC , (MOVOL:230V , MOVOL:460V , MOVOL:575V) + CAPPRE:ULCUL + CAPPRM:ASME + FREQ:60HZ) + COOL:AIR **(21/08/2018 - 10/12/2018)** **(11/12/2018 - 11/12/2018)** ((((CAPPRM:AS1210 , CAPPRM:CE , CAPPRM:MHLW , CAPPRM:MOM) + MOVOL:400V , (CAPPRM:CE + MOVOL:500V , CAPPRM:MHLW + MOVOL:200V) + COOL:AIR) + FREQ:50HZ , ((CAPPRM:ASME , CAPPRM:MHLW) + COOL:WATER + MOVOL:460V , CAPPRM:ASME + MOVOL:380V , CAPPRM:MHLW + COOL:AIR + MOVOL:200V) + FREQ:60HZ) + CAPPRE:IEC , ((MOVOL:230V , MOVOL:575V) + COOL:AIR , MOVOL:460V) + CAPPRE:ULCUL + CAPPRM:ASME + FREQ:60HZ)	U1
	1631 2079 00	1	NANOPERMRING	**(20/07/2017 - 20/08/2018)** ((((CAPPRM:AS1210 , CAPPRM:CE , CAPPRM:MHLW , CAPPRM:MOM) + MOVOL:400V , CAPPRM:CE + MOVOL:500V , CAPPRM:MHLW + MOVOL:200V) + FREQ:50HZ , ((MOVOL:200V , MOVOL:460V) + CAPPRM:MHLW , (MOVOL:380V , MOVOL:460V) + CAPPRM:ASME) + FREQ:60HZ) + CAPPRE:IEC , (MOVOL:230V , MOVOL:460V , MOVOL:575V) + CAPPRE:ULCUL + CAPPRM:ASME + FREQ:60HZ) + COOL:AIR **(21/08/2018 - 10/12/2018)** **(11/12/2018 - 11/12/2018)** ((((CAPPRM:AS1210 , CAPPRM:CE , CAPPRM:MHLW , CAPPRM:MOM) + MOVOL:400V , (CAPPRM:CE + MOVOL:500V , CAPPRM:MHLW + MOVOL:200V) + COOL:AIR) + FREQ:50HZ , ((CAPPRM:ASME , CAPPRM:MHLW) + COOL:WATER + MOVOL:460V , CAPPRM:ASME + MOVOL:380V , CAPPRM:MHLW + COOL:AIR + MOVOL:200V) + FREQ:60HZ) + CAPPRE:IEC , ((MOVOL:230V , MOVOL:575V) + COOL:AIR , MOVOL:460V) + CAPPRE:ULCUL + CAPPRM:ASME + FREQ:60HZ)	-

Legend:

CAPPRE:IEC - Component approval electrical:IEC
CAPPRE:ULCUL - Component approval electrical:UL/cUL
CAPPRM:AS1210 - Component approval mechanical:AS1210
CAPPRM:ASME - Component approval mechanical:ASME
CAPPRM:CE - Component approval mechanical:CE
CAPPRM:MHLW - Component approval mechanical:MHLW
CAPPRM:MOM - Component approval mechanical:MOM
COOL:AIR - Cooling:Air cooled
COOL:WATER - Cooling:Water cooled
FREQ:50HZ - Frequency:50 Hz
FREQ:60HZ - Frequency:60 Hz
IDRY:N - Integrated dryer:No
MODEL:GA75VP_16 - Model:GA 75VSD+
MOVOL:200V - Supply voltage:200 V
MOVOL:230V - Supply voltage:230 V
MOVOL:380V - Supply voltage:380 V
MOVOL:400V - Supply voltage:400 V
MOVOL:460V - Supply voltage:460 V
MOVOL:500V - Supply voltage:500 V
MOVOL:575V - Supply voltage:575 V

21.5 - Cubicle components GA 75L VSD+ - (200V-400V-500V/50Hz - IEC, 200V-380V-460V/60Hz - IEC, 230V-460V-575V/60Hz - UL-cUL) - Pack (20/07/2017 - 11/12/2018)

((((CAPPRM:AS1210 , CAPPRM:CE , CAPPRM:MHLW , CAPPRM:MOM) + MOVOL:400V , CAPPRM:CE + COOL:AIR + MOVOL:500V) + FREQ:50HZ , ((MOVOL:380V , MOVOL:460V) + CAPPRM:ASME , CAPPRM:MHLW + MOVOL:460V) + FREQ:60HZ , CAPPRM:MHLW + COOL:AIR + MOVOL:200V) + CAPPRE:IEC , ((MOVOL:230V , MOVOL:575V) + COOL:AIR , MOVOL:460V) + CAPPRE:ULCUL + CAPPRM:ASME + FREQ:60HZ) + IDRY:N + MODEL:GA75VP_16

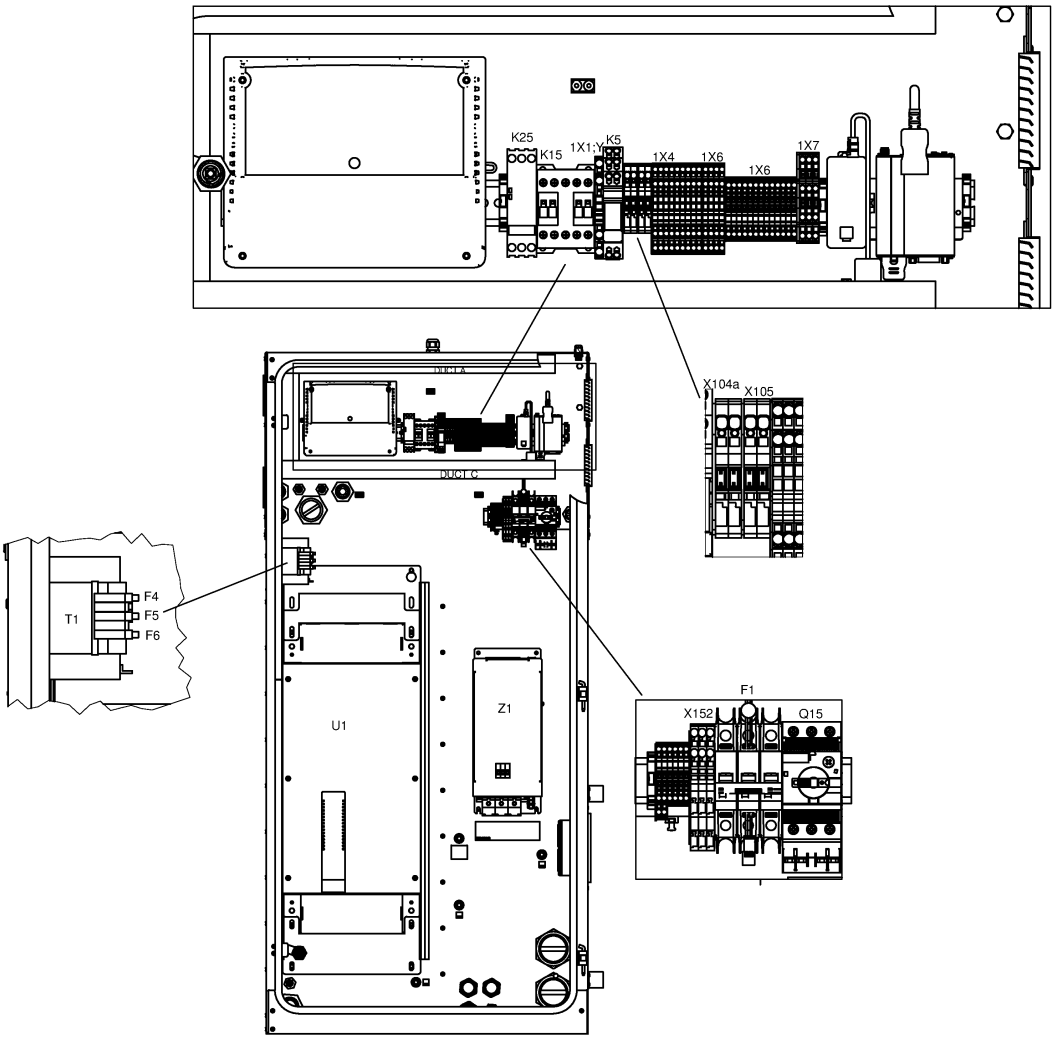

21.5 - Cubicle components GA 75L VSD+ - (200V-400V-500V/50Hz - IEC, 200V-380V-460V/60Hz - IEC, 230V-460V-575V/60Hz - UL-cUL) - Pack (20/07/2017 - 11/12/2018)

((((CAPPRM:AS1210 , CAPPRM:CE , CAPPRM:MHLW , CAPPRM:MOM) + MOVOL:400V , CAPPRM:CE + COOL:AIR + MOVOL:500V) + FREQ:50HZ , ((MOVOL:380V , MOVOL:460V) + CAPPRM:ASME , CAPPRM:MHLW + MOVOL:460V) + FREQ:60HZ , CAPPRM:MHLW + COOL:AIR + MOVOL:200V) + CAPPRE:IEC , ((MOVOL:230V , MOVOL:575V) + COOL:AIR , MOVOL:460V) + CAPPRE:ULCUL + CAPPRM:ASME + FREQ:60HZ) + IDRY:N + MODEL:GA75VP_16

Ref	Part Number	Qty	Name	Validity	EL
	0697 9811 17	2	PLUG	**(20/07/2017 - 20/08/2018)** ((((CAPPRM:AS1210 , CAPPRM:CE , CAPPRM:MHLW , CAPPRM:MOM) + MOVOL:400V , CAPPRM:CE + MOVOL:500V , CAPPRM:MHLW + MOVOL:200V) + FREQ:50HZ , ((MOVOL:200V , MOVOL:460V) + CAPPRM:MHLW , (MOVOL:380V , MOVOL:460V) + CAPPRM:ASME) + FREQ:60HZ) + CAPPRE:IEC , (MOVOL:230V , MOVOL:460V , MOVOL:575V) + CAPPRE:ULCUL + CAPPRM:ASME + FREQ:60HZ) + COOL:AIR **(21/08/2018 - 10/12/2018)** **(11/12/2018 - 11/12/2018)** ((((CAPPRM:AS1210 , CAPPRM:CE , CAPPRM:MHLW , CAPPRM:MOM) + MOVOL:400V , (CAPPRM:CE + MOVOL:500V , CAPPRM:MHLW + MOVOL:200V) + COOL:AIR) + FREQ:50HZ , ((CAPPRM:ASME , CAPPRM:MHLW) + COOL:WATER + MOVOL:460V , CAPPRM:ASME + MOVOL:380V , CAPPRM:MHLW + COOL:AIR + MOVOL:200V) + FREQ:60HZ) + CAPPRE:IEC , ((MOVOL:230V , MOVOL:575V) + COOL:AIR , MOVOL:460V) + CAPPRE:ULCUL + CAPPRM:ASME + FREQ:60HZ)	
	Electrical legend:	Plug for transfo supply			
	0989 3700 48	2	NUT	**(20/07/2017 - 20/08/2018)** ((((CAPPRM:AS1210 , CAPPRM:CE , CAPPRM:MHLW , CAPPRM:MOM) + MOVOL:400V , CAPPRM:CE + MOVOL:500V , CAPPRM:MHLW + MOVOL:200V) + FREQ:50HZ , ((MOVOL:200V , MOVOL:460V) + CAPPRM:MHLW , (MOVOL:380V , MOVOL:460V) + CAPPRM:ASME) + FREQ:60HZ) + CAPPRE:IEC , (MOVOL:230V , MOVOL:460V , MOVOL:575V) + CAPPRE:ULCUL + CAPPRM:ASME + FREQ:60HZ) + COOL:AIR **(21/08/2018 - 10/12/2018)** **(11/12/2018 - 11/12/2018)** ((((CAPPRM:AS1210 , CAPPRM:CE , CAPPRM:MHLW , CAPPRM:MOM) + MOVOL:400V , (CAPPRM:CE + MOVOL:500V , CAPPRM:MHLW + MOVOL:200V) + COOL:AIR) + FREQ:50HZ , ((CAPPRM:ASME , CAPPRM:MHLW) + COOL:WATER + MOVOL:460V , CAPPRM:ASME + MOVOL:380V , CAPPRM:MHLW + COOL:AIR + MOVOL:200V) + FREQ:60HZ) + CAPPRE:IEC , ((MOVOL:230V , MOVOL:575V) + COOL:AIR , MOVOL:460V) + CAPPRE:ULCUL + CAPPRM:ASME + FREQ:60HZ)	
	Electrical legend:	Nut for transfo supply			

Legend:

CAPPRE:IEC - Component approval electrical:IEC
CAPPRE:ULCUL - Component approval electrical:UL/cUL
CAPPRM:AS1210 - Component approval mechanical:AS1210
CAPPRM:ASME - Component approval mechanical:ASME
CAPPRM:CE - Component approval mechanical:CE
CAPPRM:MHLW - Component approval mechanical:MHLW
CAPPRM:MOM - Component approval mechanical:MOM
COOL:AIR - Cooling:Air cooled
COOL:WATER - Cooling:Water cooled
FREQ:50HZ - Frequency:50 Hz
FREQ:60HZ - Frequency:60 Hz
IDRY:N - Integrated dryer:No
MODEL:GA75VP_16 - Model:GA 75VSD+
MOVOL:200V - Supply voltage:200 V
MOVOL:230V - Supply voltage:230 V
MOVOL:380V - Supply voltage:380 V
MOVOL:400V - Supply voltage:400 V
MOVOL:460V - Supply voltage:460 V
MOVOL:500V - Supply voltage:500 V
MOVOL:575V - Supply voltage:575 V

21.5 - Cubicle components GA 75L VSD+ - (200V-400V-500V/50Hz - IEC, 200V-380V-460V/60Hz - IEC, 230V-460V-575V/60Hz - UL-cUL) - Pack (20/07/2017 - 11/12/2018)

((((CAPPRM:AS1210 , CAPPRM:CE , CAPPRM:MHLW , CAPPRM:MOM) + MOVOL:400V , CAPPRM:CE + COOL:AIR + MOVOL:500V) + FREQ:50HZ , ((MOVOL:380V , MOVOL:460V) + CAPPRM:ASME , CAPPRM:MHLW + MOVOL:460V) + FREQ:60HZ , CAPPRM:MHLW + COOL:AIR + MOVOL:200V) + CAPPRE:IEC , ((MOVOL:230V , MOVOL:575V) + COOL:AIR , MOVOL:460V) + CAPPRE:ULCUL + CAPPRM:ASME + FREQ:60HZ) + IDRY:N + MODEL:GA75VP_16

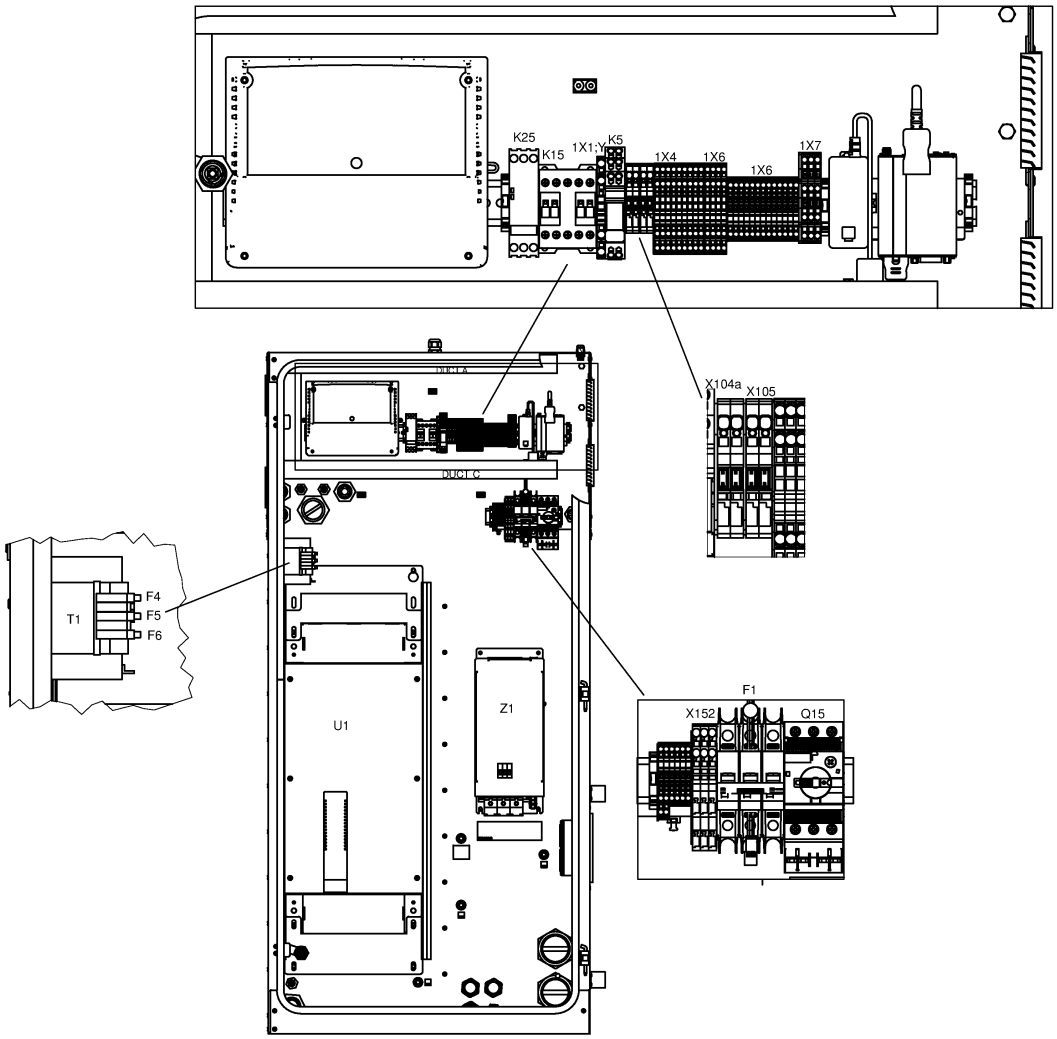

21.5 - Cubicle components GA 75L VSD+ - (200V-400V-500V/50Hz - IEC, 200V-380V-460V/60Hz - IEC, 230V-460V-575V/60Hz - UL-cUL) - Pack (20/07/2017 - 11/12/2018)

((((CAPPRM:AS1210 , CAPPRM:CE , CAPPRM:MHLW , CAPPRM:MOM) + MOVOL:400V , CAPPRM:CE + COOL:AIR + MOVOL:500V) + FREQ:50HZ , ((MOVOL:380V , MOVOL:460V) + CAPPRM:ASME , CAPPRM:MHLW + MOVOL:460V) + FREQ:60HZ , CAPPRM:MHLW + COOL:AIR + MOVOL:200V) + CAPPRE:IEC , ((MOVOL:230V , MOVOL:575V) + COOL:AIR , MOVOL:460V) + CAPPRE:ULCUL + CAPPRM:ASME + FREQ:60HZ) + IDRY:N + MODEL:GA75VP_16

Ref	Part Number	Qty	Name	Validity	EL
	0698 5140 72	1	CABLE GLAND	**(20/07/2017 - 20/08/2018)** ((((CAPPRM:AS1210 , CAPPRM:CE , CAPPRM:MHLW , CAPPRM:MOM) + MOVOL:400V , CAPPRM:CE + MOVOL:500V , CAPPRM:MHLW + MOVOL:200V) + FREQ:50HZ , ((MOVOL:200V , MOVOL:460V) + CAPPRM:MHLW , (MOVOL:380V , MOVOL:460V) + CAPPRM:ASME) + FREQ:60HZ) + CAPPRE:IEC , (MOVOL:230V , MOVOL:460V , MOVOL:575V) + CAPPRE:ULCUL + CAPPRM:ASME + FREQ:60HZ) + COOL:AIR **(21/08/2018 - 10/12/2018)** **(11/12/2018 - 11/12/2018)** ((((CAPPRM:AS1210 , CAPPRM:CE , CAPPRM:MHLW , CAPPRM:MOM) + MOVOL:400V , (CAPPRM:CE + MOVOL:500V , CAPPRM:MHLW + MOVOL:200V) + COOL:AIR) + FREQ:50HZ , ((CAPPRM:ASME , CAPPRM:MHLW) + COOL:WATER + MOVOL:460V , CAPPRM:ASME + MOVOL:380V , CAPPRM:MHLW + COOL:AIR + MOVOL:200V) + FREQ:60HZ) + CAPPRE:IEC , ((MOVOL:230V , MOVOL:575V) + COOL:AIR , MOVOL:460V) + CAPPRE:ULCUL + CAPPRM:ASME + FREQ:60HZ)	Fan
	0698 5140 71	1	CABLE GLAND	**(20/07/2017 - 20/08/2018)** ((((CAPPRM:AS1210 , CAPPRM:CE , CAPPRM:MHLW , CAPPRM:MOM) + MOVOL:400V , CAPPRM:CE + MOVOL:500V , CAPPRM:MHLW + MOVOL:200V) + FREQ:50HZ , ((MOVOL:200V , MOVOL:460V) + CAPPRM:MHLW , (MOVOL:380V , MOVOL:460V) + CAPPRM:ASME) + FREQ:60HZ) + CAPPRE:IEC , (MOVOL:230V , MOVOL:460V , MOVOL:575V) + CAPPRE:ULCUL + CAPPRM:ASME + FREQ:60HZ) + COOL:AIR **(21/08/2018 - 10/12/2018)** **(11/12/2018 - 11/12/2018)** ((((CAPPRM:AS1210 , CAPPRM:CE , CAPPRM:MHLW , CAPPRM:MOM) + MOVOL:400V , (CAPPRM:CE + MOVOL:500V , CAPPRM:MHLW + MOVOL:200V) + COOL:AIR) + FREQ:50HZ , ((CAPPRM:ASME , CAPPRM:MHLW) + COOL:WATER + MOVOL:460V , CAPPRM:ASME + MOVOL:380V , CAPPRM:MHLW + COOL:AIR + MOVOL:200V) + FREQ:60HZ) + CAPPRE:IEC , ((MOVOL:230V , MOVOL:575V) + COOL:AIR , MOVOL:460V) + CAPPRE:ULCUL + CAPPRM:ASME + FREQ:60HZ)	

Electrical legend: Ambient sensor

Legend:

CAPPRE:IEC - Component approval electrical:IEC
CAPPRE:ULCUL - Component approval electrical:UL/cUL
CAPPRM:AS1210 - Component approval mechanical:AS1210
CAPPRM:ASME - Component approval mechanical:ASME
CAPPRM:CE - Component approval mechanical:CE
CAPPRM:MHLW - Component approval mechanical:MHLW
CAPPRM:MOM - Component approval mechanical:MOM
COOL:AIR - Cooling:Air cooled
COOL:WATER - Cooling:Water cooled
FREQ:50HZ - Frequency:50 Hz
FREQ:60HZ - Frequency:60 Hz
IDRY:N - Integrated dryer:No
MODEL:GA75VP_16 - Model:GA 75VSD+
MOVOL:200V - Supply voltage:200 V
MOVOL:230V - Supply voltage:230 V
MOVOL:380V - Supply voltage:380 V
MOVOL:400V - Supply voltage:400 V
MOVOL:460V - Supply voltage:460 V
MOVOL:500V - Supply voltage:500 V
MOVOL:575V - Supply voltage:575 V

21.5 - Cubicle components GA 75L VSD+ - (200V-400V-500V/50Hz - IEC, 200V-380V-460V/60Hz - IEC, 230V-460V-575V/60Hz - UL-cUL) - Pack (20/07/2017 - 11/12/2018)

((((CAPPRM:AS1210 , CAPPRM:CE , CAPPRM:MHLW , CAPPRM:MOM) + MOVOL:400V , CAPPRM:CE + COOL:AIR + MOVOL:500V) + FREQ:50HZ , ((MOVOL:380V , MOVOL:460V) + CAPPRM:ASME , CAPPRM:MHLW + MOVOL:460V) + FREQ:60HZ , CAPPRM:MHLW + COOL:AIR + MOVOL:200V) + CAPPRE:IEC , ((MOVOL:230V , MOVOL:575V) + COOL:AIR , MOVOL:460V) + CAPPRE:ULCUL + CAPPRM:ASME + FREQ:60HZ) + IDRY:N + MODEL:GA75VP_16

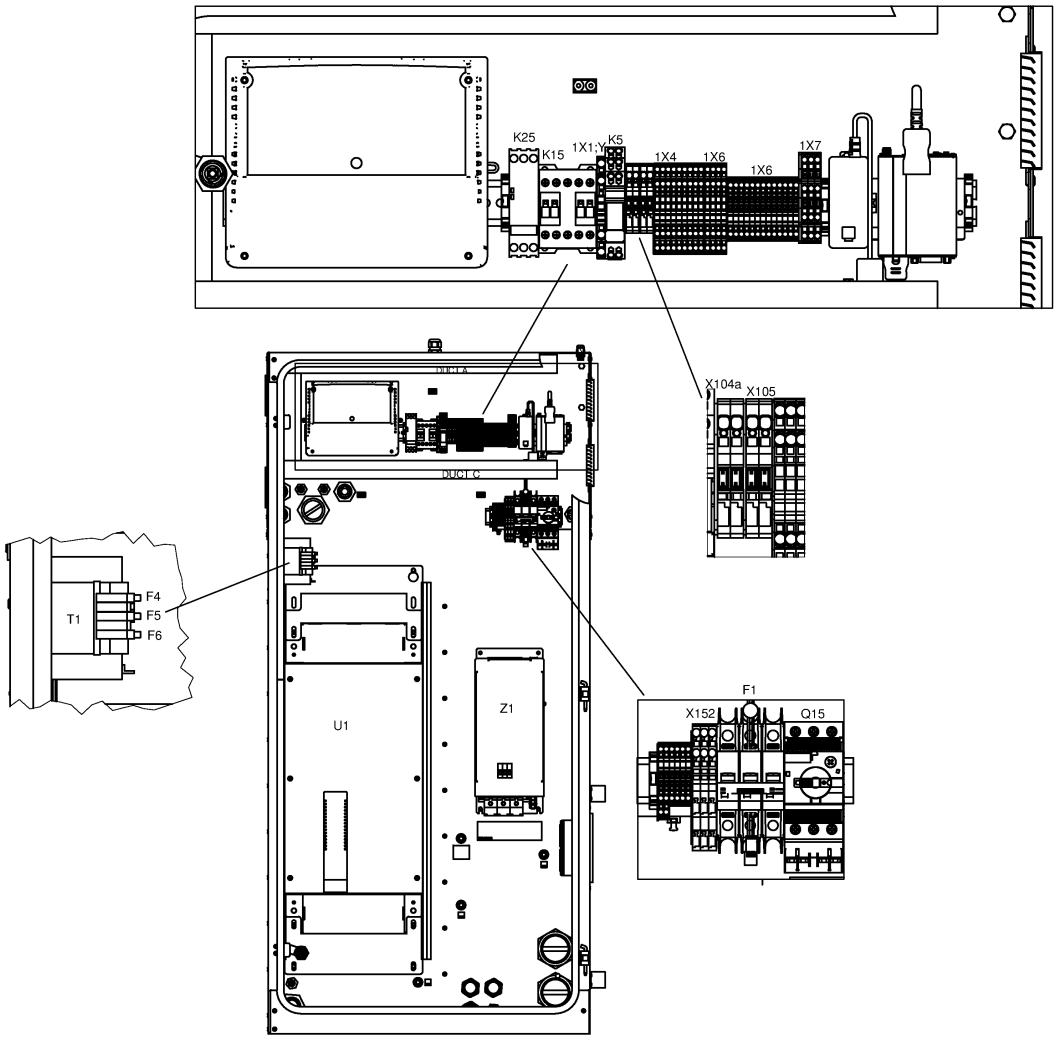

21.5 - Cubicle components GA 75L VSD+ - (200V-400V-500V/50Hz - IEC, 200V-380V-460V/60Hz - IEC, 230V-460V-575V/60Hz - UL-cUL) - Pack (20/07/2017 - 11/12/2018)

((((CAPPRM:AS1210 , CAPPRM:CE , CAPPRM:MHLW , CAPPRM:MOM) + MOVOL:400V , CAPPRM:CE + COOL:AIR + MOVOL:500V) + FREQ:50HZ , ((MOVOL:380V , MOVOL:460V) + CAPPRM:ASME , CAPPRM:MHLW + MOVOL:460V) + FREQ:60HZ , CAPPRM:MHLW + COOL:AIR + MOVOL:200V) + CAPPRE:IEC , ((MOVOL:230V , MOVOL:575V) + COOL:AIR , MOVOL:460V) + CAPPRE:ULCUL + CAPPRM:ASME + FREQ:60HZ) + IDRY:N + MODEL:GA75VP_16

Ref	Part Number	Qty	Name	Validity	EL
	0697 9809 20	1	LOCKNUT	**(20/07/2017 - 20/08/2018)** ((((CAPPRM:AS1210 , CAPPRM:CE , CAPPRM:MHLW , CAPPRM:MOM) + MOVOL:400V , CAPPRM:CE + MOVOL:500V , CAPPRM:MHLW + MOVOL:200V) + FREQ:50HZ , ((MOVOL:200V , MOVOL:460V) + CAPPRM:MHLW , (MOVOL:380V , MOVOL:460V) + CAPPRM:ASME) + FREQ:60HZ) + CAPPRE:IEC , (MOVOL:230V , MOVOL:460V , MOVOL:575V) + CAPPRE:ULCUL + CAPPRM:ASME + FREQ:60HZ) + COOL:AIR **(21/08/2018 - 10/12/2018)** **(11/12/2018 - 11/12/2018)** ((((CAPPRM:AS1210 , CAPPRM:CE , CAPPRM:MHLW , CAPPRM:MOM) + MOVOL:400V , (CAPPRM:CE + MOVOL:500V , CAPPRM:MHLW + MOVOL:200V) + COOL:AIR) + FREQ:50HZ , ((CAPPRM:ASME , CAPPRM:MHLW) + COOL:WATER + MOVOL:460V , CAPPRM:ASME + MOVOL:380V , CAPPRM:MHLW + COOL:AIR + MOVOL:200V) + FREQ:60HZ) + CAPPRE:IEC , ((MOVOL:230V , MOVOL:575V) + COOL:AIR , MOVOL:460V) + CAPPRE:ULCUL + CAPPRM:ASME + FREQ:60HZ)	
	Electrical legend:	Ambient sensor			
	1089 9556 44	1	FAN WITH FILTER	**(20/07/2017 - 20/08/2018)** ((((CAPPRM:AS1210 , CAPPRM:CE , CAPPRM:MHLW , CAPPRM:MOM) + MOVOL:400V , CAPPRM:CE + MOVOL:500V , CAPPRM:MHLW + MOVOL:200V) + FREQ:50HZ , ((MOVOL:200V , MOVOL:460V) + CAPPRM:MHLW , (MOVOL:380V , MOVOL:460V) + CAPPRM:ASME) + FREQ:60HZ) + CAPPRE:IEC , (MOVOL:230V , MOVOL:460V , MOVOL:575V) + CAPPRE:ULCUL + CAPPRM:ASME + FREQ:60HZ) + COOL:AIR **(21/08/2018 - 10/12/2018)** **(11/12/2018 - 11/12/2018)** ((((CAPPRM:AS1210 , CAPPRM:CE , CAPPRM:MHLW , CAPPRM:MOM) + MOVOL:400V , (CAPPRM:CE + MOVOL:500V , CAPPRM:MHLW + MOVOL:200V) + COOL:AIR) + FREQ:50HZ , ((CAPPRM:ASME , CAPPRM:MHLW) + COOL:WATER + MOVOL:460V , CAPPRM:ASME + MOVOL:380V , CAPPRM:MHLW + COOL:AIR + MOVOL:200V) + FREQ:60HZ) + CAPPRE:IEC , ((MOVOL:230V , MOVOL:575V) + COOL:AIR , MOVOL:460V) + CAPPRE:ULCUL + CAPPRM:ASME + FREQ:60HZ)	Cubicle fan

Legend:

CAPPRE:IEC - Component approval electrical:IEC
CAPPRE:ULCUL - Component approval electrical:UL/cUL
CAPPRM:AS1210 - Component approval mechanical:AS1210
CAPPRM:ASME - Component approval mechanical:ASME
CAPPRM:CE - Component approval mechanical:CE
CAPPRM:MHLW - Component approval mechanical:MHLW
CAPPRM:MOM - Component approval mechanical:MOM
COOL:AIR - Cooling:Air cooled
COOL:WATER - Cooling:Water cooled
FREQ:50HZ - Frequency:50 Hz
FREQ:60HZ - Frequency:60 Hz
IDRY:N - Integrated dryer:No
MODEL:GA75VP_16 - Model:GA 75VSD+
MOVOL:200V - Supply voltage:200 V
MOVOL:230V - Supply voltage:230 V
MOVOL:380V - Supply voltage:380 V
MOVOL:400V - Supply voltage:400 V
MOVOL:460V - Supply voltage:460 V
MOVOL:500V - Supply voltage:500 V
MOVOL:575V - Supply voltage:575 V

21.5 - Cubicle components GA 75L VSD+ - (200V-400V-500V/50Hz - IEC, 200V-380V-460V/60Hz - IEC, 230V-460V-575V/60Hz - UL-cUL) - Pack (20/07/2017 - 11/12/2018)

((((CAPPRM:AS1210 , CAPPRM:CE , CAPPRM:MHLW , CAPPRM:MOM) + MOVOL:400V , CAPPRM:CE + COOL:AIR + MOVOL:500V) + FREQ:50HZ , ((MOVOL:380V , MOVOL:460V) + CAPPRM:ASME , CAPPRM:MHLW + MOVOL:460V) + FREQ:60HZ , CAPPRM:MHLW + COOL:AIR + MOVOL:200V) + CAPPRE:IEC , ((MOVOL:230V , MOVOL:575V) + COOL:AIR , MOVOL:460V) + CAPPRE:ULCUL + CAPPRM:ASME + FREQ:60HZ) + IDRY:N + MODEL:GA75VP_16

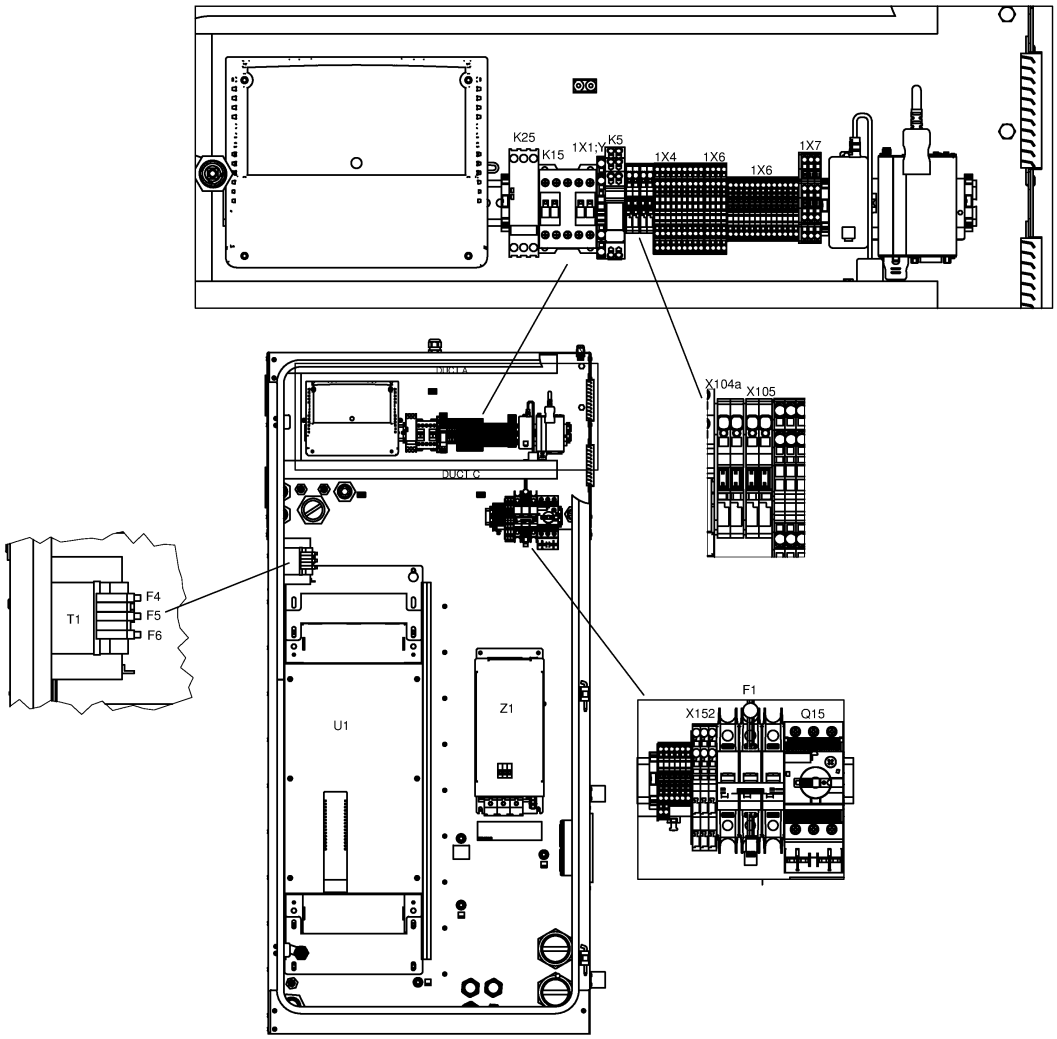

21.5 - Cubicle components GA 75L VSD+ - (200V-400V-500V/50Hz - IEC, 200V-380V-460V/60Hz - IEC, 230V-460V-575V/60Hz - UL-cUL) - Pack (20/07/2017 - 11/12/2018)

((((CAPPRM:AS1210 , CAPPRM:CE , CAPPRM:MHLW , CAPPRM:MOM) + MOVOL:400V , CAPPRM:CE + COOL:AIR + MOVOL:500V) + FREQ:50HZ , ((MOVOL:380V , MOVOL:460V) + CAPPRM:ASME , CAPPRM:MHLW + MOVOL:460V) + FREQ:60HZ , CAPPRM:MHLW + COOL:AIR + MOVOL:200V) + CAPPRE:IEC , ((MOVOL:230V , MOVOL:575V) + COOL:AIR , MOVOL:460V) + CAPPRE:ULCUL + CAPPRM:ASME + FREQ:60HZ) + IDRY:N + MODEL:GA75VP_16

Ref	Part Number	Qty	Name	Validity	EL
		4	AIR INLET W/O FILTER	**(20/07/2017 - 20/08/2018)** ((((CAPPRM:AS1210 , CAPPRM:CE , CAPPRM:MHLW , CAPPRM:MOM) + MOVOL:400V , CAPPRM:CE + MOVOL:500V , CAPPRM:MHLW + MOVOL:200V) + FREQ:50HZ , ((MOVOL:200V , MOVOL:460V) + CAPPRM:MHLW , (MOVOL:380V , MOVOL:460V) + CAPPRM:ASME) + FREQ:60HZ) + CAPPRE:IEC , (MOVOL:230V , MOVOL:460V , MOVOL:575V) + CAPPRE:ULCUL + CAPPRM:ASME + FREQ:60HZ) + COOL:AIR **(21/08/2018 - 10/12/2018)** **(11/12/2018 - 11/12/2018)** ((((CAPPRM:AS1210 , CAPPRM:CE , CAPPRM:MHLW , CAPPRM:MOM) + MOVOL:400V , (CAPPRM:CE + MOVOL:500V , CAPPRM:MHLW + MOVOL:200V) + COOL:AIR) + FREQ:50HZ , ((CAPPRM:ASME , CAPPRM:MHLW) + COOL:WATER + MOVOL:460V , CAPPRM:ASME + MOVOL:380V , CAPPRM:MHLW + COOL:AIR + MOVOL:200V) + FREQ:60HZ) + CAPPRE:IEC , ((MOVOL:230V , MOVOL:575V) + COOL:AIR , MOVOL:460V) + CAPPRE:ULCUL + CAPPRM:ASME + FREQ:60HZ)	-
Service kits:		2901 9901 01 - PREVENTIVE MAINTENANCE KIT - GA 75L VSD+ 2901 9900 95 - AIR FILTER KIT - GA 75L VSD+			
	1088 0032 09	1	CONNECTOR	**(20/07/2017 - 20/08/2018)** ((((CAPPRM:AS1210 , CAPPRM:CE , CAPPRM:MHLW , CAPPRM:MOM) + MOVOL:400V , CAPPRM:CE + MOVOL:500V , CAPPRM:MHLW + MOVOL:200V) + FREQ:50HZ , ((MOVOL:200V , MOVOL:460V) + CAPPRM:MHLW , (MOVOL:380V , MOVOL:460V) + CAPPRM:ASME) + FREQ:60HZ) + CAPPRE:IEC , (MOVOL:230V , MOVOL:460V , MOVOL:575V) + CAPPRE:ULCUL + CAPPRM:ASME + FREQ:60HZ) + COOL:AIR **(21/08/2018 - 10/12/2018)** **(11/12/2018 - 11/12/2018)** ((((CAPPRM:AS1210 , CAPPRM:CE , CAPPRM:MHLW , CAPPRM:MOM) + MOVOL:400V , (CAPPRM:CE + MOVOL:500V , CAPPRM:MHLW + MOVOL:200V) + COOL:AIR) + FREQ:50HZ , ((CAPPRM:ASME , CAPPRM:MHLW) + COOL:WATER + MOVOL:460V , CAPPRM:ASME + MOVOL:380V , CAPPRM:MHLW + COOL:AIR + MOVOL:200V) + FREQ:60HZ) + CAPPRE:IEC , ((MOVOL:230V , MOVOL:575V) + COOL:AIR , MOVOL:460V) + CAPPRE:ULCUL + CAPPRM:ASME + FREQ:60HZ)	X3

Legend:

CAPPRE:IEC - Component approval electrical:IEC
CAPPRE:ULCUL - Component approval electrical:UL/cUL
CAPPRM:AS1210 - Component approval mechanical:AS1210
CAPPRM:ASME - Component approval mechanical:ASME
CAPPRM:CE - Component approval mechanical:CE
CAPPRM:MHLW - Component approval mechanical:MHLW
CAPPRM:MOM - Component approval mechanical:MOM
COOL:AIR - Cooling:Air cooled
COOL:WATER - Cooling:Water cooled
FREQ:50HZ - Frequency:50 Hz
FREQ:60HZ - Frequency:60 Hz
IDRY:N - Integrated dryer:No
MODEL:GA75VP_16 - Model:GA 75VSD+
MOVOL:200V - Supply voltage:200 V
MOVOL:230V - Supply voltage:230 V
MOVOL:380V - Supply voltage:380 V
MOVOL:400V - Supply voltage:400 V
MOVOL:460V - Supply voltage:460 V
MOVOL:500V - Supply voltage:500 V
MOVOL:575V - Supply voltage:575 V

21.5 - Cubicle components GA 75L VSD+ - (200V-400V-500V/50Hz - IEC, 200V-380V-460V/60Hz - IEC, 230V-460V-575V/60Hz - UL-cUL) - Pack (20/07/2017 - 11/12/2018)

((((CAPPRM:AS1210 , CAPPRM:CE , CAPPRM:MHLW , CAPPRM:MOM) + MOVOL:400V , CAPPRM:CE + COOL:AIR + MOVOL:500V) + FREQ:50HZ , ((MOVOL:380V , MOVOL:460V) + CAPPRM:ASME , CAPPRM:MHLW + MOVOL:460V) + FREQ:60HZ , CAPPRM:MHLW + COOL:AIR + MOVOL:200V) + CAPPRE:IEC , ((MOVOL:230V , MOVOL:575V) + COOL:AIR , MOVOL:460V) + CAPPRE:ULCUL + CAPPRM:ASME + FREQ:60HZ) + IDRY:N + MODEL:GA75VP_16

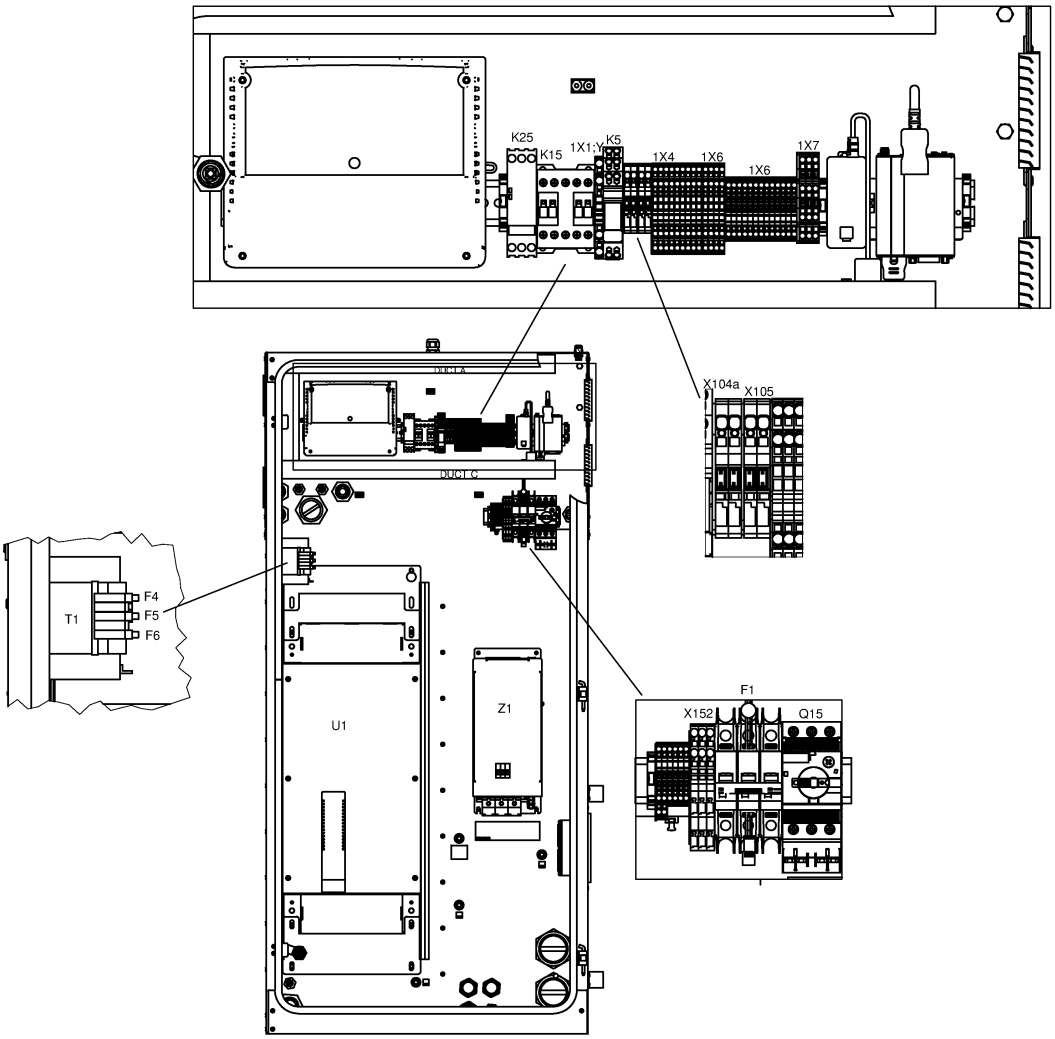

21.5 - Cubicle components GA 75L VSD+ - (200V-400V-500V/50Hz - IEC, 200V-380V-460V/60Hz - IEC, 230V-460V-575V/60Hz - UL-cUL) - Pack (20/07/2017 - 11/12/2018)

((((CAPPRM:AS1210 , CAPPRM:CE , CAPPRM:MHLW , CAPPRM:MOM) + MOVOL:400V , CAPPRM:CE + COOL:AIR + MOVOL:500V) + FREQ:50HZ , ((MOVOL:380V , MOVOL:460V) + CAPPRM:ASME , CAPPRM:MHLW + MOVOL:460V) + FREQ:60HZ , CAPPRM:MHLW + COOL:AIR + MOVOL:200V) + CAPPRE:IEC , ((MOVOL:230V , MOVOL:575V) + COOL:AIR , MOVOL:460V) + CAPPRE:ULCUL + CAPPRM:ASME + FREQ:60HZ) + IDRY:N + MODEL:GA75VP_16

Ref	Part Number	Qty	Name	Validity	EL
	1089 9572 05	1	LINE FILTER	**(20/07/2017 - 20/08/2018)** ((((CAPPRM:AS1210 , CAPPRM:CE , CAPPRM:MHLW , CAPPRM:MOM) + MOVOL:400V , CAPPRM:CE + MOVOL:500V , CAPPRM:MHLW + MOVOL:200V) + FREQ:50HZ , ((MOVOL:200V , MOVOL:460V) + CAPPRM:MHLW , (MOVOL:380V , MOVOL:460V) + CAPPRM:ASME) + FREQ:60HZ) + CAPPRE:IEC , (MOVOL:230V , MOVOL:460V , MOVOL:575V) + CAPPRE:ULCUL + CAPPRM:ASME + FREQ:60HZ) + COOL:AIR **(21/08/2018 - 10/12/2018)** **(11/12/2018 - 11/12/2018)** ((((CAPPRM:AS1210 , CAPPRM:CE , CAPPRM:MHLW , CAPPRM:MOM) + MOVOL:400V , (CAPPRM:CE + MOVOL:500V , CAPPRM:MHLW + MOVOL:200V) + COOL:AIR) + FREQ:50HZ , ((CAPPRM:ASME , CAPPRM:MHLW) + COOL:WATER + MOVOL:460V , CAPPRM:ASME + MOVOL:380V , CAPPRM:MHLW + COOL:AIR + MOVOL:200V) + FREQ:60HZ) + CAPPRE:IEC , ((MOVOL:230V , MOVOL:575V) + COOL:AIR , MOVOL:460V) + CAPPRE:ULCUL + CAPPRM:ASME + FREQ:60HZ)	Z1 for 75 kw
	Electrical legend:	Z1 for 75 kw			
	1089 9562 04	1	STRAP	**(20/07/2017 - 20/08/2018)** ((((CAPPRM:AS1210 , CAPPRM:CE , CAPPRM:MHLW , CAPPRM:MOM) + MOVOL:400V , CAPPRM:CE + MOVOL:500V , CAPPRM:MHLW + MOVOL:200V) + FREQ:50HZ , ((MOVOL:200V , MOVOL:460V) + CAPPRM:MHLW , (MOVOL:380V , MOVOL:460V) + CAPPRM:ASME) + FREQ:60HZ) + CAPPRE:IEC , (MOVOL:230V , MOVOL:460V , MOVOL:575V) + CAPPRE:ULCUL + CAPPRM:ASME + FREQ:60HZ) + COOL:AIR **(21/08/2018 - 10/12/2018)** **(11/12/2018 - 11/12/2018)** ((((CAPPRM:AS1210 , CAPPRM:CE , CAPPRM:MHLW , CAPPRM:MOM) + MOVOL:400V , (CAPPRM:CE + MOVOL:500V , CAPPRM:MHLW + MOVOL:200V) + COOL:AIR) + FREQ:50HZ , ((CAPPRM:ASME , CAPPRM:MHLW) + COOL:WATER + MOVOL:460V , CAPPRM:ASME + MOVOL:380V , CAPPRM:MHLW + COOL:AIR + MOVOL:200V) + FREQ:60HZ) + CAPPRE:IEC , ((MOVOL:230V , MOVOL:575V) + COOL:AIR , MOVOL:460V) + CAPPRE:ULCUL + CAPPRM:ASME + FREQ:60HZ)	HF-screen

Legend:

CAPPRE:IEC - Component approval electrical:IEC
CAPPRE:ULCUL - Component approval electrical:UL/cUL
CAPPRM:AS1210 - Component approval mechanical:AS1210
CAPPRM:ASME - Component approval mechanical:ASME
CAPPRM:CE - Component approval mechanical:CE
CAPPRM:MHLW - Component approval mechanical:MHLW
CAPPRM:MOM - Component approval mechanical:MOM
COOL:AIR - Cooling:Air cooled
COOL:WATER - Cooling:Water cooled
FREQ:50HZ - Frequency:50 Hz
FREQ:60HZ - Frequency:60 Hz
IDRY:N - Integrated dryer:No
MODEL:GA75VP_16 - Model:GA 75VSD+
MOVOL:200V - Supply voltage:200 V
MOVOL:230V - Supply voltage:230 V
MOVOL:380V - Supply voltage:380 V
MOVOL:400V - Supply voltage:400 V
MOVOL:460V - Supply voltage:460 V
MOVOL:500V - Supply voltage:500 V
MOVOL:575V - Supply voltage:575 V

21.5 - Cubicle components GA 75L VSD+ - (200V-400V-500V/50Hz - IEC, 200V-380V-460V/60Hz - IEC, 230V-460V-575V/60Hz - UL-cUL) - Pack (20/07/2017 - 11/12/2018)

((((CAPPRM:AS1210 , CAPPRM:CE , CAPPRM:MHLW , CAPPRM:MOM) + MOVOL:400V , CAPPRM:CE + COOL:AIR + MOVOL:500V) + FREQ:50HZ , ((MOVOL:380V , MOVOL:460V) + CAPPRM:ASME , CAPPRM:MHLW + MOVOL:460V) + FREQ:60HZ , CAPPRM:MHLW + COOL:AIR + MOVOL:200V) + CAPPRE:IEC , ((MOVOL:230V , MOVOL:575V) + COOL:AIR , MOVOL:460V) + CAPPRE:ULCUL + CAPPRM:ASME + FREQ:60HZ) + IDRY:N + MODEL:GA75VP_16

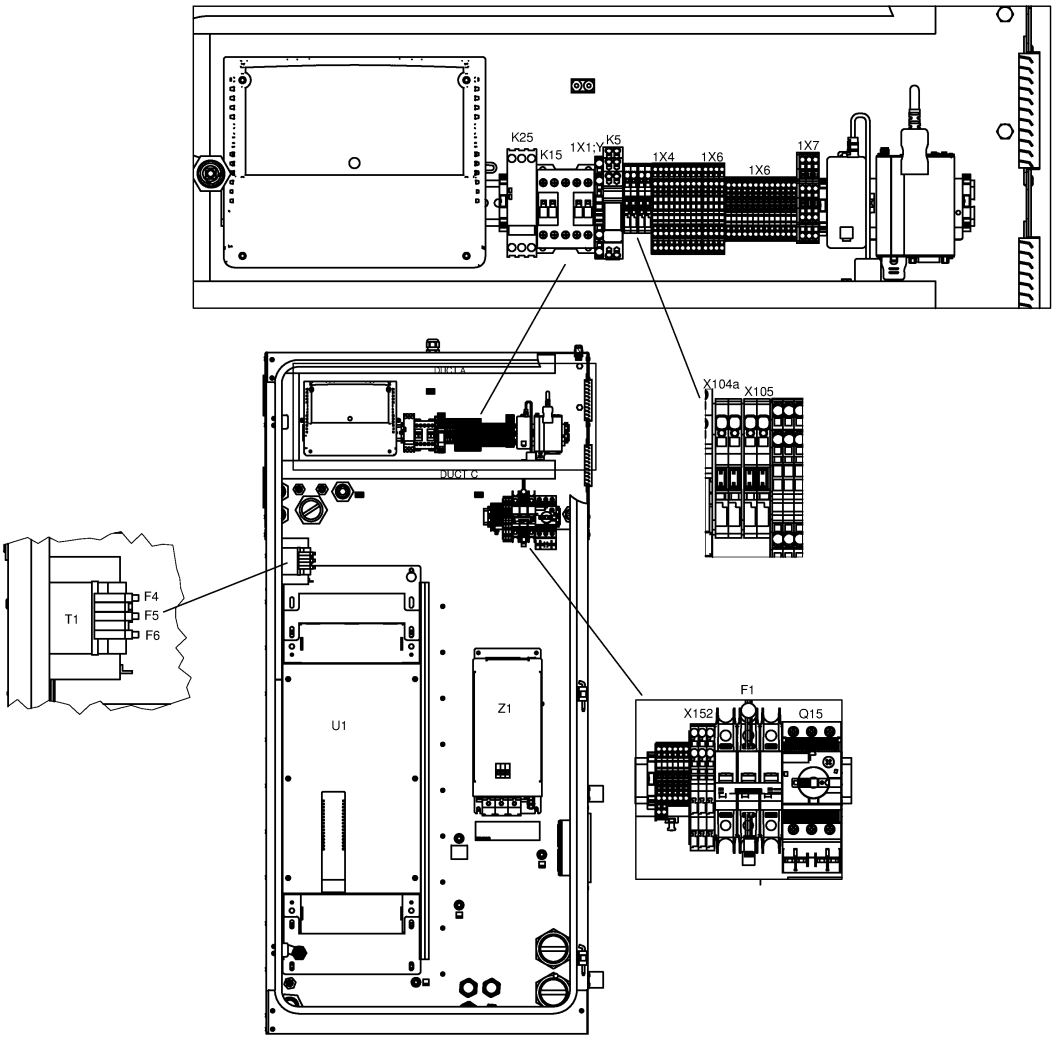

21.5 - Cubicle components GA 75L VSD+ - (200V-400V-500V/50Hz - IEC, 200V-380V-460V/60Hz - IEC, 230V-460V-575V/60Hz - UL-cUL) - Pack (20/07/2017 - 11/12/2018)

((((CAPPRM:AS1210 , CAPPRM:CE , CAPPRM:MHLW , CAPPRM:MOM) + MOVOL:400V , CAPPRM:CE + COOL:AIR + MOVOL:500V) + FREQ:50HZ , ((MOVOL:380V , MOVOL:460V) + CAPPRM:ASME , CAPPRM:MHLW + MOVOL:460V) + FREQ:60HZ , CAPPRM:MHLW + COOL:AIR + MOVOL:200V) + CAPPRE:IEC , ((MOVOL:230V , MOVOL:575V) + COOL:AIR , MOVOL:460V) + CAPPRE:ULCUL + CAPPRM:ASME + FREQ:60HZ) + IDRY:N + MODEL:GA75VP_16

Ref	Part Number	Qty	Name	Validity	EL
	1089 9514 56	1	TRANSFORMER	**(20/07/2017 - 20/08/2018)** ((((CAPPRM:AS1210 , CAPPRM:CE , CAPPRM:MHLW , CAPPRM:MOM) + MOVOL:400V , CAPPRM:CE + MOVOL:500V , CAPPRM:MHLW + MOVOL:200V) + FREQ:50HZ , ((MOVOL:200V , MOVOL:460V) + CAPPRM:MHLW , (MOVOL:380V , MOVOL:460V) + CAPPRM:ASME) + FREQ:60HZ) + CAPPRE:IEC , (MOVOL:230V , MOVOL:460V , MOVOL:575V) + CAPPRE:ULCUL + CAPPRM:ASME + FREQ:60HZ) + COOL:AIR **(21/08/2018 - 10/12/2018)** **(11/12/2018 - 11/12/2018)** ((((CAPPRM:AS1210 , CAPPRM:CE , CAPPRM:MHLW , CAPPRM:MOM) + MOVOL:400V , (CAPPRM:CE + MOVOL:500V , CAPPRM:MHLW + MOVOL:200V) + COOL:AIR) + FREQ:50HZ , ((CAPPRM:ASME , CAPPRM:MHLW) + COOL:WATER + MOVOL:460V , CAPPRM:ASME + MOVOL:380V , CAPPRM:MHLW + COOL:AIR + MOVOL:200V) + FREQ:60HZ) + CAPPRE:IEC , ((MOVOL:230V , MOVOL:575V) + COOL:AIR , MOVOL:460V) + CAPPRE:ULCUL + CAPPRM:ASME + FREQ:60HZ)	T1
	1089 9522 26	1	CIRCUIT BREAKER	**(20/07/2017 - 20/08/2018)** ((((CAPPRM:AS1210 , CAPPRM:CE , CAPPRM:MHLW , CAPPRM:MOM) + MOVOL:400V , CAPPRM:CE + MOVOL:500V , CAPPRM:MHLW + MOVOL:200V) + FREQ:50HZ , ((MOVOL:200V , MOVOL:460V) + CAPPRM:MHLW , (MOVOL:380V , MOVOL:460V) + CAPPRM:ASME) + FREQ:60HZ) + CAPPRE:IEC , (MOVOL:230V , MOVOL:460V , MOVOL:575V) + CAPPRE:ULCUL + CAPPRM:ASME + FREQ:60HZ) + COOL:AIR **(21/08/2018 - 10/12/2018)** **(11/12/2018 - 11/12/2018)** ((((CAPPRM:AS1210 , CAPPRM:CE , CAPPRM:MHLW , CAPPRM:MOM) + MOVOL:400V , (CAPPRM:CE + MOVOL:500V , CAPPRM:MHLW + MOVOL:200V) + COOL:AIR) + FREQ:50HZ , ((CAPPRM:ASME , CAPPRM:MHLW) + COOL:WATER + MOVOL:460V , CAPPRM:ASME + MOVOL:380V , CAPPRM:MHLW + COOL:AIR + MOVOL:200V) + FREQ:60HZ) + CAPPRE:IEC , ((MOVOL:230V , MOVOL:575V) + COOL:AIR , MOVOL:460V) + CAPPRE:ULCUL + CAPPRM:ASME + FREQ:60HZ)	F1
	1089 9513 41	1	PUSH BUTTON	**(20/07/2017 - 20/08/2018)** ((((CAPPRM:AS1210 , CAPPRM:CE , CAPPRM:MHLW , CAPPRM:MOM) + MOVOL:400V , CAPPRM:CE + MOVOL:500V , CAPPRM:MHLW + MOVOL:200V) + FREQ:50HZ , ((MOVOL:200V , MOVOL:460V) + CAPPRM:MHLW , (MOVOL:380V , MOVOL:460V) + CAPPRM:ASME) + FREQ:60HZ) + CAPPRE:IEC , (MOVOL:230V , MOVOL:460V , MOVOL:575V) + CAPPRE:ULCUL + CAPPRM:ASME + FREQ:60HZ) + COOL:AIR **(21/08/2018 - 10/12/2018)** **(11/12/2018 - 11/12/2018)** ((((CAPPRM:AS1210 , CAPPRM:CE , CAPPRM:MHLW , CAPPRM:MOM) + MOVOL:400V , (CAPPRM:CE + MOVOL:500V , CAPPRM:MHLW + MOVOL:200V) + COOL:AIR) + FREQ:50HZ , ((CAPPRM:ASME , CAPPRM:MHLW) + COOL:WATER + MOVOL:460V , CAPPRM:ASME + MOVOL:380V , CAPPRM:MHLW + COOL:AIR + MOVOL:200V) + FREQ:60HZ) + CAPPRE:IEC , ((MOVOL:230V , MOVOL:575V) + COOL:AIR , MOVOL:460V) + CAPPRE:ULCUL + CAPPRM:ASME + FREQ:60HZ)	S3

Legend:

CAPPRE:IEC - Component approval electrical:IEC
CAPPRE:ULCUL - Component approval electrical:UL/cUL
CAPPRM:AS1210 - Component approval mechanical:AS1210
CAPPRM:ASME - Component approval mechanical:ASME
CAPPRM:CE - Component approval mechanical:CE
CAPPRM:MHLW - Component approval mechanical:MHLW
CAPPRM:MOM - Component approval mechanical:MOM
COOL:AIR - Cooling:Air cooled
COOL:WATER - Cooling:Water cooled
FREQ:50HZ - Frequency:50 Hz
FREQ:60HZ - Frequency:60 Hz
IDRY:N - Integrated dryer:No
MODEL:GA75VP_16 - Model:GA 75VSD+
MOVOL:200V - Supply voltage:200 V
MOVOL:230V - Supply voltage:230 V
MOVOL:380V - Supply voltage:380 V
MOVOL:400V - Supply voltage:400 V
MOVOL:460V - Supply voltage:460 V
MOVOL:500V - Supply voltage:500 V
MOVOL:575V - Supply voltage:575 V

21.5 - Cubicle components GA 75L VSD+ - (200V-400V-500V/50Hz - IEC, 200V-380V-460V/60Hz - IEC, 230V-460V-575V/60Hz - UL-cUL) - Pack (20/07/2017 - 11/12/2018)

((((CAPPRM:AS1210 , CAPPRM:CE , CAPPRM:MHLW , CAPPRM:MOM) + MOVOL:400V , CAPPRM:CE + COOL:AIR + MOVOL:500V) + FREQ:50HZ , ((MOVOL:380V , MOVOL:460V) + CAPPRM:ASME , CAPPRM:MHLW + MOVOL:460V) + FREQ:60HZ , CAPPRM:MHLW + COOL:AIR + MOVOL:200V) + CAPPRE:IEC , ((MOVOL:230V , MOVOL:575V) + COOL:AIR , MOVOL:460V) + CAPPRE:ULCUL + CAPPRM:ASME + FREQ:60HZ) + IDRY:N + MODEL:GA75VP_16

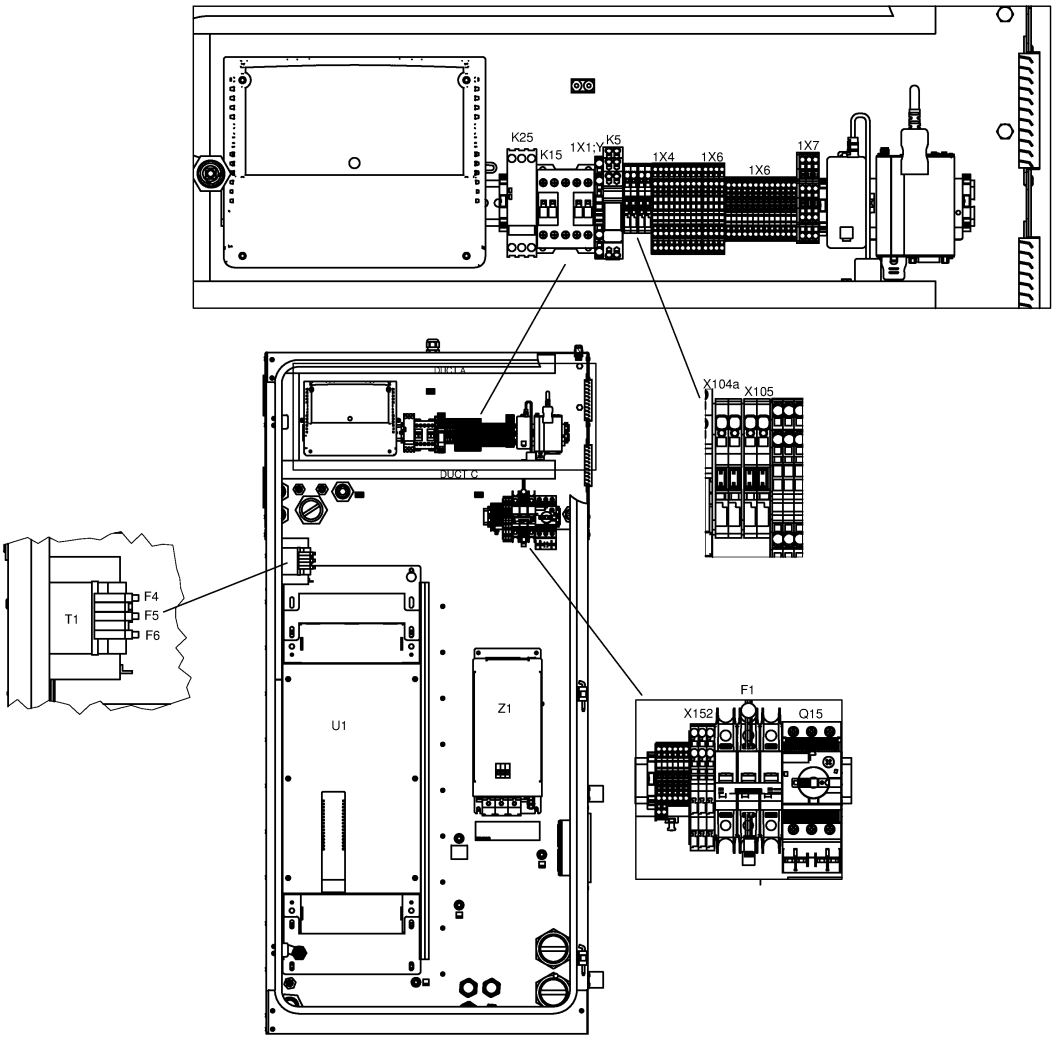

21.5 - Cubicle components GA 75L VSD+ - (200V-400V-500V/50Hz - IEC, 200V-380V-460V/60Hz - IEC, 230V-460V-575V/60Hz - UL-cUL) - Pack (20/07/2017 - 11/12/2018)

((((CAPPRM:AS1210 , CAPPRM:CE , CAPPRM:MHLW , CAPPRM:MOM) + MOVOL:400V , CAPPRM:CE + COOL:AIR + MOVOL:500V) + FREQ:50HZ , ((MOVOL:380V , MOVOL:460V) + CAPPRM:ASME , CAPPRM:MHLW + MOVOL:460V) + FREQ:60HZ , CAPPRM:MHLW + COOL:AIR + MOVOL:200V) + CAPPRE:IEC , ((MOVOL:230V , MOVOL:575V) + COOL:AIR , MOVOL:460V) + CAPPRE:ULCUL + CAPPRM:ASME + FREQ:60HZ) + IDRY:N + MODEL:GA75VP_16

Ref	Part Number	Qty	Name	Validity	EL
	1089 9513 28	1	HOLDER	**(20/07/2017 - 20/08/2018)** ((((CAPPRM:AS1210 , CAPPRM:CE , CAPPRM:MHLW , CAPPRM:MOM) + MOVOL:400V , CAPPRM:CE + MOVOL:500V , CAPPRM:MHLW + MOVOL:200V) + FREQ:50HZ , ((MOVOL:200V , MOVOL:460V) + CAPPRM:MHLW , (MOVOL:380V , MOVOL:460V) + CAPPRM:ASME) + FREQ:60HZ) + CAPPRE:IEC , (MOVOL:230V , MOVOL:460V , MOVOL:575V) + CAPPRE:ULCUL + CAPPRM:ASME + FREQ:60HZ) + COOL:AIR **(21/08/2018 - 10/12/2018)** **(11/12/2018 - 11/12/2018)** ((((CAPPRM:AS1210 , CAPPRM:CE , CAPPRM:MHLW , CAPPRM:MOM) + MOVOL:400V , (CAPPRM:CE + MOVOL:500V , CAPPRM:MHLW + MOVOL:200V) + COOL:AIR) + FREQ:50HZ , ((CAPPRM:ASME , CAPPRM:MHLW) + COOL:WATER + MOVOL:460V , CAPPRM:ASME + MOVOL:380V , CAPPRM:MHLW + COOL:AIR + MOVOL:200V) + FREQ:60HZ) + CAPPRE:IEC , ((MOVOL:230V , MOVOL:575V) + COOL:AIR , MOVOL:460V) + CAPPRE:ULCUL + CAPPRM:ASME + FREQ:60HZ)	S3
	~~1089 9513 30~~	4	CONTACTOR	**(20/07/2017 - 20/08/2018)** ((((CAPPRM:AS1210 , CAPPRM:CE , CAPPRM:MHLW , CAPPRM:MOM) + MOVOL:400V , CAPPRM:CE + MOVOL:500V , CAPPRM:MHLW + MOVOL:200V) + FREQ:50HZ , ((MOVOL:200V , MOVOL:460V) + CAPPRM:MHLW , (MOVOL:380V , MOVOL:460V) + CAPPRM:ASME) + FREQ:60HZ) + CAPPRE:IEC , (MOVOL:230V , MOVOL:460V , MOVOL:575V) + CAPPRE:ULCUL + CAPPRM:ASME + FREQ:60HZ) + COOL:AIR **(21/08/2018 - 10/12/2018)** **(11/12/2018 - 11/12/2018)** ((((CAPPRM:AS1210 , CAPPRM:CE , CAPPRM:MHLW , CAPPRM:MOM) + MOVOL:400V , (CAPPRM:CE + MOVOL:500V , CAPPRM:MHLW + MOVOL:200V) + COOL:AIR) + FREQ:50HZ , ((CAPPRM:ASME , CAPPRM:MHLW) + COOL:WATER + MOVOL:460V , CAPPRM:ASME + MOVOL:380V , CAPPRM:MHLW + COOL:AIR + MOVOL:200V) + FREQ:60HZ) + CAPPRE:IEC , ((MOVOL:230V , MOVOL:575V) + COOL:AIR , MOVOL:460V) + CAPPRE:ULCUL + CAPPRM:ASME + FREQ:60HZ)	S3
	Substituted by:	1089 9513 04 - CONTACT BLOCK (quantity: 1)			

Legend:

CAPPRE:IEC - Component approval electrical:IEC
CAPPRE:ULCUL - Component approval electrical:UL/cUL
CAPPRM:AS1210 - Component approval mechanical:AS1210
CAPPRM:ASME - Component approval mechanical:ASME
CAPPRM:CE - Component approval mechanical:CE
CAPPRM:MHLW - Component approval mechanical:MHLW
CAPPRM:MOM - Component approval mechanical:MOM
COOL:AIR - Cooling:Air cooled
COOL:WATER - Cooling:Water cooled
FREQ:50HZ - Frequency:50 Hz
FREQ:60HZ - Frequency:60 Hz
IDRY:N - Integrated dryer:No
MODEL:GA75VP_16 - Model:GA 75VSD+
MOVOL:200V - Supply voltage:200 V
MOVOL:230V - Supply voltage:230 V
MOVOL:380V - Supply voltage:380 V
MOVOL:400V - Supply voltage:400 V
MOVOL:460V - Supply voltage:460 V
MOVOL:500V - Supply voltage:500 V
MOVOL:575V - Supply voltage:575 V

21.5 - Cubicle components GA 75L VSD+ - (200V-400V-500V/50Hz - IEC, 200V-380V-460V/60Hz - IEC, 230V-460V-575V/60Hz - UL-cUL) - Pack (20/07/2017 - 11/12/2018)

((((CAPPRM:AS1210 , CAPPRM:CE , CAPPRM:MHLW , CAPPRM:MOM) + MOVOL:400V , CAPPRM:CE + COOL:AIR + MOVOL:500V) + FREQ:50HZ , ((MOVOL:380V , MOVOL:460V) + CAPPRM:ASME , CAPPRM:MHLW + MOVOL:460V) + FREQ:60HZ , CAPPRM:MHLW + COOL:AIR + MOVOL:200V) + CAPPRE:IEC , ((MOVOL:230V , MOVOL:575V) + COOL:AIR , MOVOL:460V) + CAPPRE:ULCUL + CAPPRM:ASME + FREQ:60HZ) + IDRY:N + MODEL:GA75VP_16

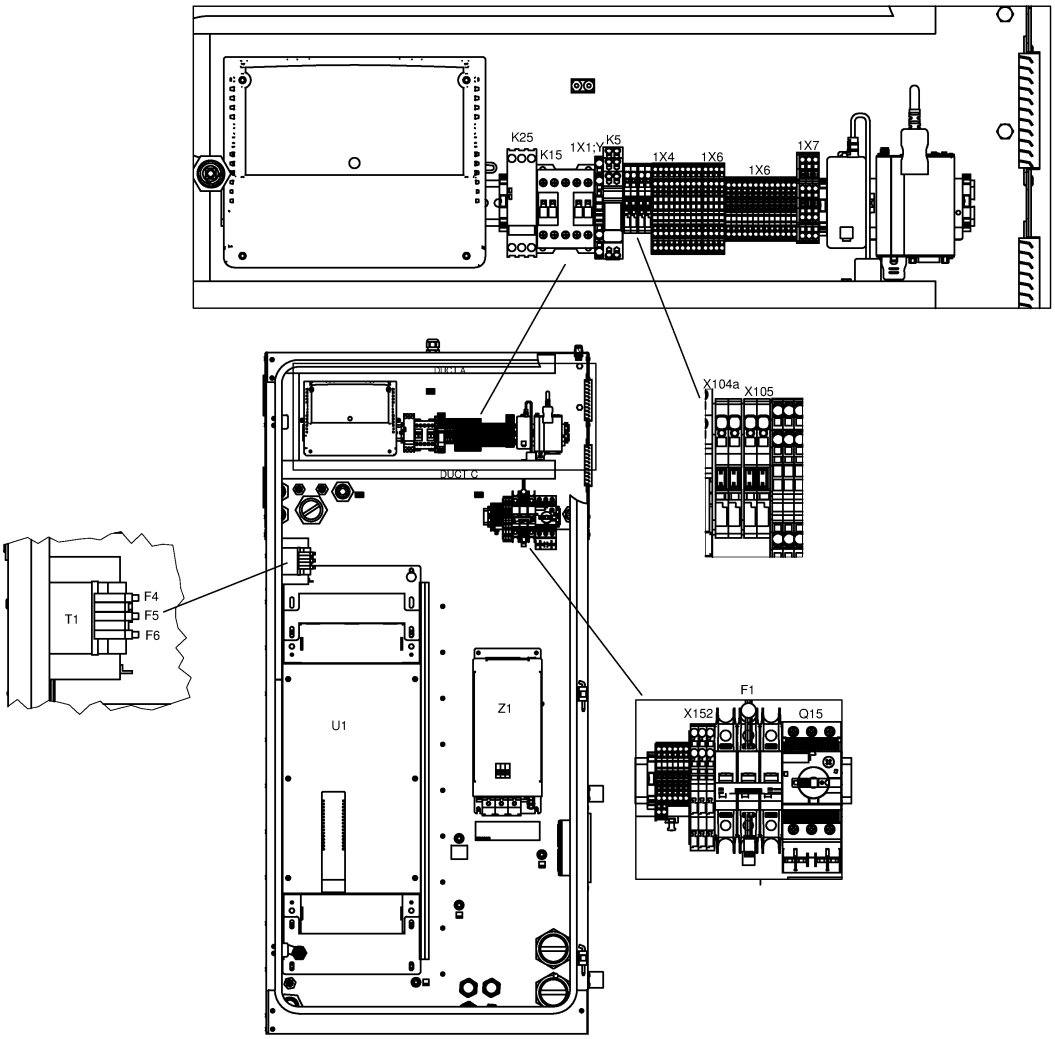

21.5 - Cubicle components GA 75L VSD+ - (200V-400V-500V/50Hz - IEC, 200V-380V-460V/60Hz - IEC, 230V-460V-575V/60Hz - UL-cUL) - Pack (20/07/2017 - 11/12/2018)

((((CAPPRM:AS1210 , CAPPRM:CE , CAPPRM:MHLW , CAPPRM:MOM) + MOVOL:400V , CAPPRM:CE + COOL:AIR + MOVOL:500V) + FREQ:50HZ , ((MOVOL:380V , MOVOL:460V) + CAPPRM:ASME , CAPPRM:MHLW + MOVOL:460V) + FREQ:60HZ , CAPPRM:MHLW + COOL:AIR + MOVOL:200V) + CAPPRE:IEC , ((MOVOL:230V , MOVOL:575V) + COOL:AIR , MOVOL:460V) + CAPPRE:ULCUL + CAPPRM:ASME + FREQ:60HZ) + IDRY:N + MODEL:GA75VP_16

Ref	Part Number	Qty	Name	Validity	EL
	1088 0031 02	1	CONNECTOR 2-POLE	**(20/07/2017 - 20/08/2018)** ((((CAPPRM:AS1210 , CAPPRM:CE , CAPPRM:MHLW , CAPPRM:MOM) + MOVOL:400V , CAPPRM:CE + MOVOL:500V , CAPPRM:MHLW + MOVOL:200V) + FREQ:50HZ , ((MOVOL:200V , MOVOL:460V) + CAPPRM:MHLW , (MOVOL:380V , MOVOL:460V) + CAPPRM:ASME) + FREQ:60HZ) + CAPPRE:IEC , (MOVOL:230V , MOVOL:460V , MOVOL:575V) + CAPPRE:ULCUL + CAPPRM:ASME + FREQ:60HZ) + COOL:AIR **(21/08/2018 - 10/12/2018)** **(11/12/2018 - 11/12/2018)** ((((CAPPRM:AS1210 , CAPPRM:CE , CAPPRM:MHLW , CAPPRM:MOM) + MOVOL:400V , (CAPPRM:CE + MOVOL:500V , CAPPRM:MHLW + MOVOL:200V) + COOL:AIR) + FREQ:50HZ , ((CAPPRM:ASME , CAPPRM:MHLW) + COOL:WATER + MOVOL:460V , CAPPRM:ASME + MOVOL:380V , CAPPRM:MHLW + COOL:AIR + MOVOL:200V) + FREQ:60HZ) + CAPPRE:IEC , ((MOVOL:230V , MOVOL:575V) + COOL:AIR , MOVOL:460V) + CAPPRE:ULCUL + CAPPRM:ASME + FREQ:60HZ)	
Electrical legend:		X153 (Smartbox)			
	1088 0039 07	3	TERMINAL	**(20/07/2017 - 20/08/2018)** ((((CAPPRM:AS1210 , CAPPRM:CE , CAPPRM:MHLW , CAPPRM:MOM) + MOVOL:400V , CAPPRM:CE + MOVOL:500V , CAPPRM:MHLW + MOVOL:200V) + FREQ:50HZ , ((MOVOL:200V , MOVOL:460V) + CAPPRM:MHLW , (MOVOL:380V , MOVOL:460V) + CAPPRM:ASME) + FREQ:60HZ) + CAPPRE:IEC , (MOVOL:230V , MOVOL:460V , MOVOL:575V) + CAPPRE:ULCUL + CAPPRM:ASME + FREQ:60HZ) + COOL:AIR **(21/08/2018 - 10/12/2018)** **(11/12/2018 - 11/12/2018)** ((((CAPPRM:AS1210 , CAPPRM:CE , CAPPRM:MHLW , CAPPRM:MOM) + MOVOL:400V , (CAPPRM:CE + MOVOL:500V , CAPPRM:MHLW + MOVOL:200V) + COOL:AIR) + FREQ:50HZ , ((CAPPRM:ASME , CAPPRM:MHLW) + COOL:WATER + MOVOL:460V , CAPPRM:ASME + MOVOL:380V , CAPPRM:MHLW + COOL:AIR + MOVOL:200V) + FREQ:60HZ) + CAPPRE:IEC , ((MOVOL:230V , MOVOL:575V) + COOL:AIR , MOVOL:460V) + CAPPRE:ULCUL + CAPPRM:ASME + FREQ:60HZ)	X152

Legend:

CAPPRE:IEC - Component approval electrical:IEC
CAPPRE:ULCUL - Component approval electrical:UL/cUL
CAPPRM:AS1210 - Component approval mechanical:AS1210
CAPPRM:ASME - Component approval mechanical:ASME
CAPPRM:CE - Component approval mechanical:CE
CAPPRM:MHLW - Component approval mechanical:MHLW
CAPPRM:MOM - Component approval mechanical:MOM
COOL:AIR - Cooling:Air cooled
COOL:WATER - Cooling:Water cooled
FREQ:50HZ - Frequency:50 Hz
FREQ:60HZ - Frequency:60 Hz
IDRY:N - Integrated dryer:No
MODEL:GA75VP_16 - Model:GA 75VSD+
MOVOL:200V - Supply voltage:200 V
MOVOL:230V - Supply voltage:230 V
MOVOL:380V - Supply voltage:380 V
MOVOL:400V - Supply voltage:400 V
MOVOL:460V - Supply voltage:460 V
MOVOL:500V - Supply voltage:500 V
MOVOL:575V - Supply voltage:575 V

21.5 - Cubicle components GA 75L VSD+ - (200V-400V-500V/50Hz - IEC, 200V-380V-460V/60Hz - IEC, 230V-460V-575V/60Hz - UL-cUL) - Pack (20/07/2017 - 11/12/2018)

((((CAPPRM:AS1210 , CAPPRM:CE , CAPPRM:MHLW , CAPPRM:MOM) + MOVOL:400V , CAPPRM:CE + COOL:AIR + MOVOL:500V) + FREQ:50HZ , ((MOVOL:380V , MOVOL:460V) + CAPPRM:ASME , CAPPRM:MHLW + MOVOL:460V) + FREQ:60HZ , CAPPRM:MHLW + COOL:AIR + MOVOL:200V) + CAPPRE:IEC , ((MOVOL:230V , MOVOL:575V) + COOL:AIR , MOVOL:460V) + CAPPRE:ULCUL + CAPPRM:ASME + FREQ:60HZ) + IDRY:N + MODEL:GA75VP_16

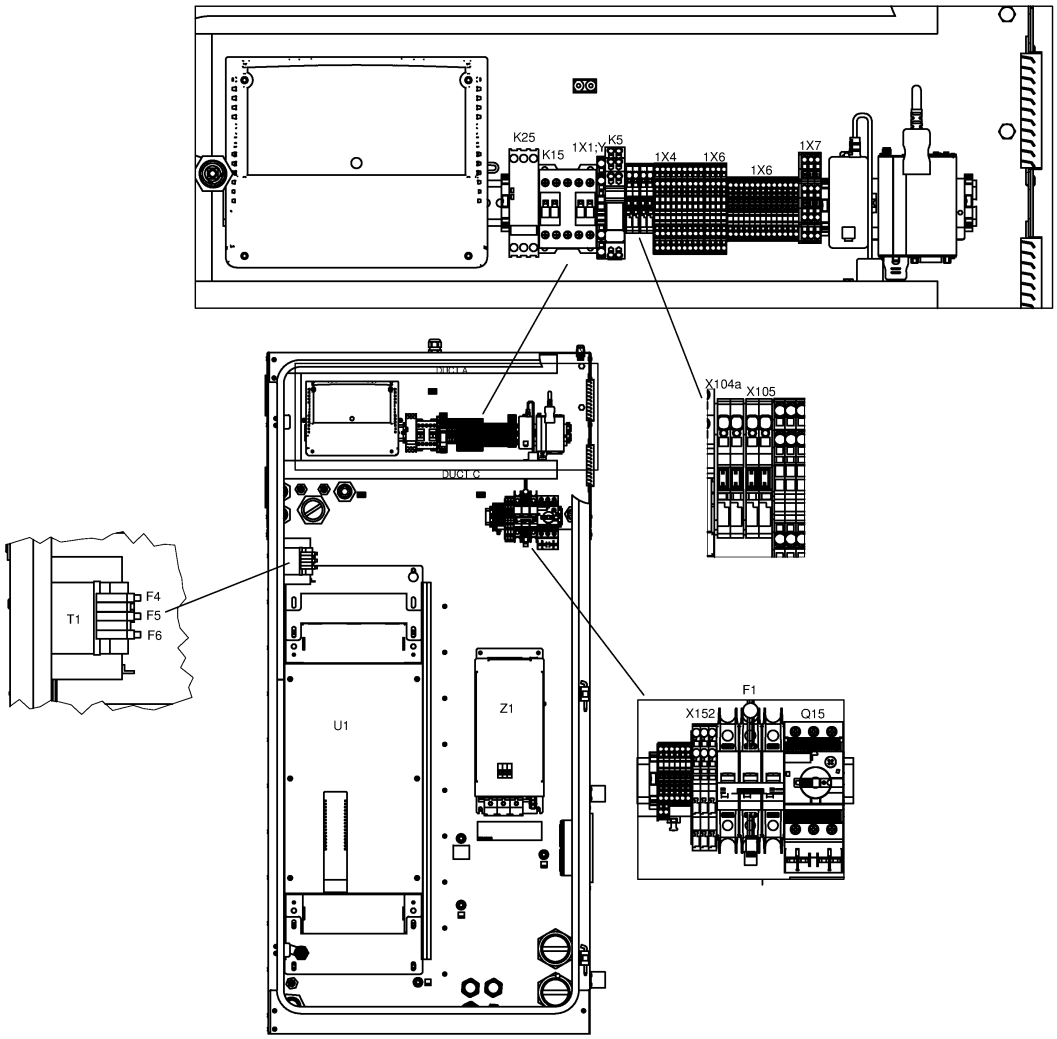

21.5 - Cubicle components GA 75L VSD+ - (200V-400V-500V/50Hz - IEC, 200V-380V-460V/60Hz - IEC, 230V-460V-575V/60Hz - UL-cUL) - Pack (20/07/2017 - 11/12/2018)

((((CAPPRM:AS1210 , CAPPRM:CE , CAPPRM:MHLW , CAPPRM:MOM) + MOVOL:400V , CAPPRM:CE + COOL:AIR + MOVOL:500V) + FREQ:50HZ , ((MOVOL:380V , MOVOL:460V) + CAPPRM:ASME , CAPPRM:MHLW + MOVOL:460V) + FREQ:60HZ , CAPPRM:MHLW + COOL:AIR + MOVOL:200V) + CAPPRE:IEC , ((MOVOL:230V , MOVOL:575V) + COOL:AIR , MOVOL:460V) + CAPPRE:ULCUL + CAPPRM:ASME + FREQ:60HZ) + IDRY:N + MODEL:GA75VP_16

Ref	Part Number	Qty	Name	Validity	EL
	1088 0039 05	1	PLATE	**(20/07/2017 - 20/08/2018)** ((((CAPPRM:AS1210 , CAPPRM:CE , CAPPRM:MHLW , CAPPRM:MOM) + MOVOL:400V , CAPPRM:CE + MOVOL:500V , CAPPRM:MHLW + MOVOL:200V) + FREQ:50HZ , ((MOVOL:200V , MOVOL:460V) + CAPPRM:MHLW , (MOVOL:380V , MOVOL:460V) + CAPPRM:ASME) + FREQ:60HZ) + CAPPRE:IEC , (MOVOL:230V , MOVOL:460V , MOVOL:575V) + CAPPRE:ULCUL + CAPPRM:ASME + FREQ:60HZ) + COOL:AIR **(21/08/2018 - 10/12/2018)** **(11/12/2018 - 11/12/2018)** ((((CAPPRM:AS1210 , CAPPRM:CE , CAPPRM:MHLW , CAPPRM:MOM) + MOVOL:400V , (CAPPRM:CE + MOVOL:500V , CAPPRM:MHLW + MOVOL:200V) + COOL:AIR) + FREQ:50HZ , ((CAPPRM:ASME , CAPPRM:MHLW) + COOL:WATER + MOVOL:460V , CAPPRM:ASME + MOVOL:380V , CAPPRM:MHLW + COOL:AIR + MOVOL:200V) + FREQ:60HZ) + CAPPRE:IEC , ((MOVOL:230V , MOVOL:575V) + COOL:AIR , MOVOL:460V) + CAPPRE:ULCUL + CAPPRM:ASME + FREQ:60HZ)	X152
	1088 0039 26	1	CONNECTOR	**(20/07/2017 - 20/08/2018)** ((((CAPPRM:AS1210 , CAPPRM:CE , CAPPRM:MHLW , CAPPRM:MOM) + MOVOL:400V , CAPPRM:CE + MOVOL:500V , CAPPRM:MHLW + MOVOL:200V) + FREQ:50HZ , ((MOVOL:200V , MOVOL:460V) + CAPPRM:MHLW , (MOVOL:380V , MOVOL:460V) + CAPPRM:ASME) + FREQ:60HZ) + CAPPRE:IEC , (MOVOL:230V , MOVOL:460V , MOVOL:575V) + CAPPRE:ULCUL + CAPPRM:ASME + FREQ:60HZ) + COOL:AIR **(21/08/2018 - 10/12/2018)** **(11/12/2018 - 11/12/2018)** ((((CAPPRM:AS1210 , CAPPRM:CE , CAPPRM:MHLW , CAPPRM:MOM) + MOVOL:400V , (CAPPRM:CE + MOVOL:500V , CAPPRM:MHLW + MOVOL:200V) + COOL:AIR) + FREQ:50HZ , ((CAPPRM:ASME , CAPPRM:MHLW) + COOL:WATER + MOVOL:460V , CAPPRM:ASME + MOVOL:380V , CAPPRM:MHLW + COOL:AIR + MOVOL:200V) + FREQ:60HZ) + CAPPRE:IEC , ((MOVOL:230V , MOVOL:575V) + COOL:AIR , MOVOL:460V) + CAPPRE:ULCUL + CAPPRM:ASME + FREQ:60HZ)	

Electrical legend: X152 (remove coding pin 1,3)

Legend:

CAPPRE:IEC - Component approval electrical:IEC
CAPPRE:ULCUL - Component approval electrical:UL/cUL
CAPPRM:AS1210 - Component approval mechanical:AS1210
CAPPRM:ASME - Component approval mechanical:ASME
CAPPRM:CE - Component approval mechanical:CE
CAPPRM:MHLW - Component approval mechanical:MHLW
CAPPRM:MOM - Component approval mechanical:MOM
COOL:AIR - Cooling:Air cooled
COOL:WATER - Cooling:Water cooled
FREQ:50HZ - Frequency:50 Hz
FREQ:60HZ - Frequency:60 Hz
IDRY:N - Integrated dryer:No
MODEL:GA75VP_16 - Model:GA 75VSD+
MOVOL:200V - Supply voltage:200 V
MOVOL:230V - Supply voltage:230 V
MOVOL:380V - Supply voltage:380 V
MOVOL:400V - Supply voltage:400 V
MOVOL:460V - Supply voltage:460 V
MOVOL:500V - Supply voltage:500 V
MOVOL:575V - Supply voltage:575 V

21.5 - Cubicle components GA 75L VSD+ - (200V-400V-500V/50Hz - IEC, 200V-380V-460V/60Hz - IEC, 230V-460V-575V/60Hz - UL-cUL) - Pack (20/07/2017 - 11/12/2018)

((((CAPPRM:AS1210 , CAPPRM:CE , CAPPRM:MHLW , CAPPRM:MOM) + MOVOL:400V , CAPPRM:CE + COOL:AIR + MOVOL:500V) + FREQ:50HZ , ((MOVOL:380V , MOVOL:460V) + CAPPRM:ASME , CAPPRM:MHLW + MOVOL:460V) + FREQ:60HZ , CAPPRM:MHLW + COOL:AIR + MOVOL:200V) + CAPPRE:IEC , ((MOVOL:230V , MOVOL:575V) + COOL:AIR , MOVOL:460V) + CAPPRE:ULCUL + CAPPRM:ASME + FREQ:60HZ) + IDRY:N + MODEL:GA75VP_16

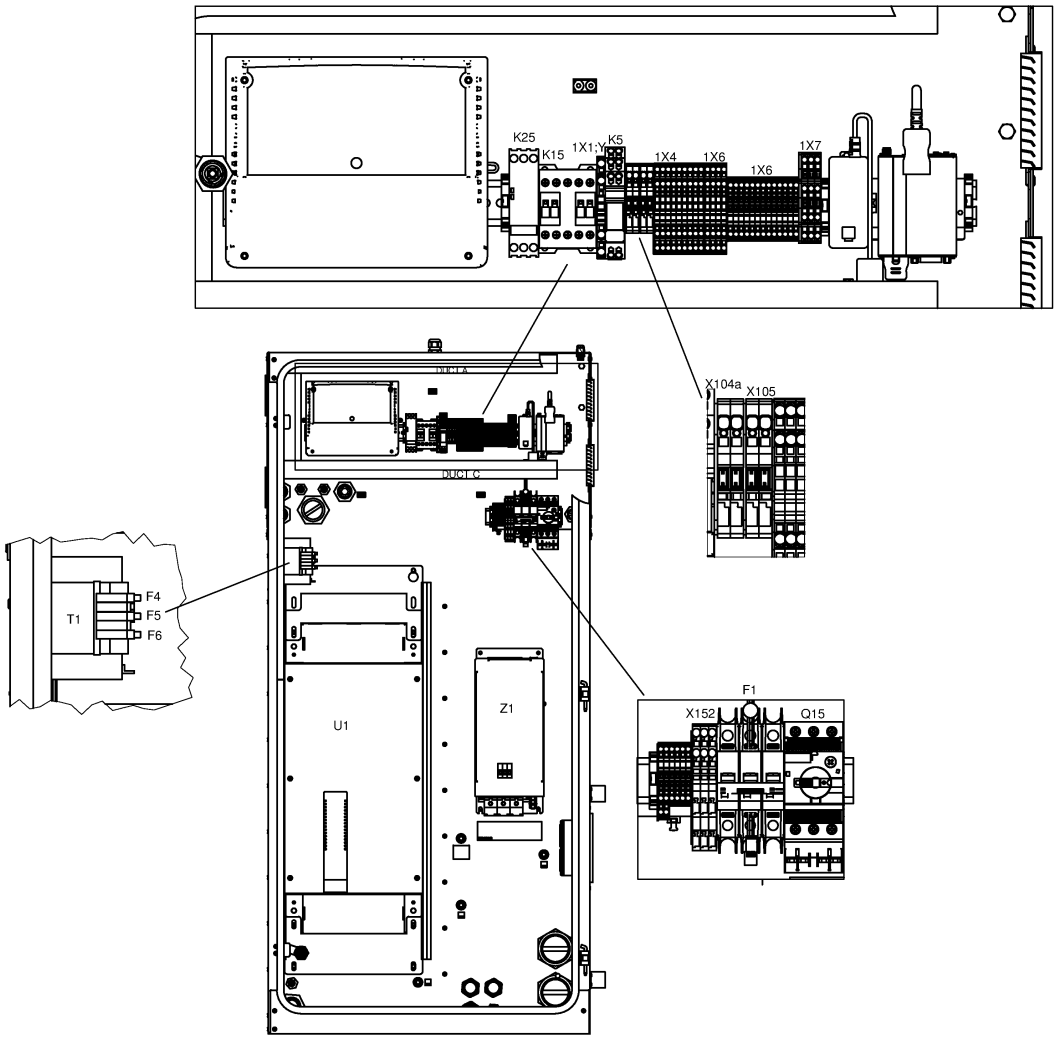

21.5 - Cubicle components GA 75L VSD+ - (200V-400V-500V/50Hz - IEC, 200V-380V-460V/60Hz - IEC, 230V-460V-575V/60Hz - UL-cUL) - Pack (20/07/2017 - 11/12/2018)

((((CAPPRM:AS1210 , CAPPRM:CE , CAPPRM:MHLW , CAPPRM:MOM) + MOVOL:400V , CAPPRM:CE + COOL:AIR + MOVOL:500V) + FREQ:50HZ , ((MOVOL:380V , MOVOL:460V) + CAPPRM:ASME , CAPPRM:MHLW + MOVOL:460V) + FREQ:60HZ , CAPPRM:MHLW + COOL:AIR + MOVOL:200V) + CAPPRE:IEC , ((MOVOL:230V , MOVOL:575V) + COOL:AIR , MOVOL:460V) + CAPPRE:ULCUL + CAPPRM:ASME + FREQ:60HZ) + IDRY:N + MODEL:GA75VP_16

Ref	Part Number	Qty	Name	Validity	EL
	1088 0037 99	4	PIN	**(20/07/2017 - 20/08/2018)** ((((CAPPRM:AS1210 , CAPPRM:CE , CAPPRM:MHLW , CAPPRM:MOM) + MOVOL:400V , CAPPRM:CE + MOVOL:500V , CAPPRM:MHLW + MOVOL:200V) + FREQ:50HZ , ((MOVOL:200V , MOVOL:460V) + CAPPRM:MHLW , (MOVOL:380V , MOVOL:460V) + CAPPRM:ASME) + FREQ:60HZ) + CAPPRE:IEC , (MOVOL:230V , MOVOL:460V , MOVOL:575V) + CAPPRE:ULCUL + CAPPRM:ASME + FREQ:60HZ) + COOL:AIR **(21/08/2018 - 10/12/2018)** **(11/12/2018 - 11/12/2018)** ((((CAPPRM:AS1210 , CAPPRM:CE , CAPPRM:MHLW , CAPPRM:MOM) + MOVOL:400V , (CAPPRM:CE + MOVOL:500V , CAPPRM:MHLW + MOVOL:200V) + COOL:AIR) + FREQ:50HZ , ((CAPPRM:ASME , CAPPRM:MHLW) + COOL:WATER + MOVOL:460V , CAPPRM:ASME + MOVOL:380V , CAPPRM:MHLW + COOL:AIR + MOVOL:200V) + FREQ:60HZ) + CAPPRE:IEC , ((MOVOL:230V , MOVOL:575V) + COOL:AIR , MOVOL:460V) + CAPPRE:ULCUL + CAPPRM:ASME + FREQ:60HZ)	X152:1; 3
	~~1088 0031 81~~	7	END STOP BRACKET 6MM	**(20/07/2017 - 20/08/2018)** ((((CAPPRM:AS1210 , CAPPRM:CE , CAPPRM:MHLW , CAPPRM:MOM) + MOVOL:400V , CAPPRM:CE + MOVOL:500V , CAPPRM:MHLW + MOVOL:200V) + FREQ:50HZ , ((MOVOL:200V , MOVOL:460V) + CAPPRM:MHLW , (MOVOL:380V , MOVOL:460V) + CAPPRM:ASME) + FREQ:60HZ) + CAPPRE:IEC , (MOVOL:230V , MOVOL:460V , MOVOL:575V) + CAPPRE:ULCUL + CAPPRM:ASME + FREQ:60HZ) + COOL:AIR **(21/08/2018 - 10/12/2018)** **(11/12/2018 - 11/12/2018)** ((((CAPPRM:AS1210 , CAPPRM:CE , CAPPRM:MHLW , CAPPRM:MOM) + MOVOL:400V , (CAPPRM:CE + MOVOL:500V , CAPPRM:MHLW + MOVOL:200V) + COOL:AIR) + FREQ:50HZ , ((CAPPRM:ASME , CAPPRM:MHLW) + COOL:WATER + MOVOL:460V , CAPPRM:ASME + MOVOL:380V , CAPPRM:MHLW + COOL:AIR + MOVOL:200V) + FREQ:60HZ) + CAPPRE:IEC , ((MOVOL:230V , MOVOL:575V) + COOL:AIR , MOVOL:460V) + CAPPRE:ULCUL + CAPPRM:ASME + FREQ:60HZ)	
	Electrical legend:		Connector/terminal rail		
	Substituted by:		1089 0577 82 - END RETAINER (quantity: 1)		

Legend:

CAPPRE:IEC - Component approval electrical:IEC
CAPPRE:ULCUL - Component approval electrical:UL/cUL
CAPPRM:AS1210 - Component approval mechanical:AS1210
CAPPRM:ASME - Component approval mechanical:ASME
CAPPRM:CE - Component approval mechanical:CE
CAPPRM:MHLW - Component approval mechanical:MHLW
CAPPRM:MOM - Component approval mechanical:MOM
COOL:AIR - Cooling:Air cooled
COOL:WATER - Cooling:Water cooled
FREQ:50HZ - Frequency:50 Hz
FREQ:60HZ - Frequency:60 Hz
IDRY:N - Integrated dryer:No
MODEL:GA75VP_16 - Model:GA 75VSD+
MOVOL:200V - Supply voltage:200 V
MOVOL:230V - Supply voltage:230 V
MOVOL:380V - Supply voltage:380 V
MOVOL:400V - Supply voltage:400 V
MOVOL:460V - Supply voltage:460 V
MOVOL:500V - Supply voltage:500 V
MOVOL:575V - Supply voltage:575 V

21.5 - Cubicle components GA 75L VSD+ - (200V-400V-500V/50Hz - IEC, 200V-380V-460V/60Hz - IEC, 230V-460V-575V/60Hz - UL-cUL) - Pack (20/07/2017 - 11/12/2018)

((((CAPPRM:AS1210 , CAPPRM:CE , CAPPRM:MHLW , CAPPRM:MOM) + MOVOL:400V , CAPPRM:CE + COOL:AIR + MOVOL:500V) + FREQ:50HZ , ((MOVOL:380V , MOVOL:460V) + CAPPRM:ASME , CAPPRM:MHLW + MOVOL:460V) + FREQ:60HZ , CAPPRM:MHLW + COOL:AIR + MOVOL:200V) + CAPPRE:IEC , ((MOVOL:230V , MOVOL:575V) + COOL:AIR , MOVOL:460V) + CAPPRE:ULCUL + CAPPRM:ASME + FREQ:60HZ) + IDRY:N + MODEL:GA75VP_16

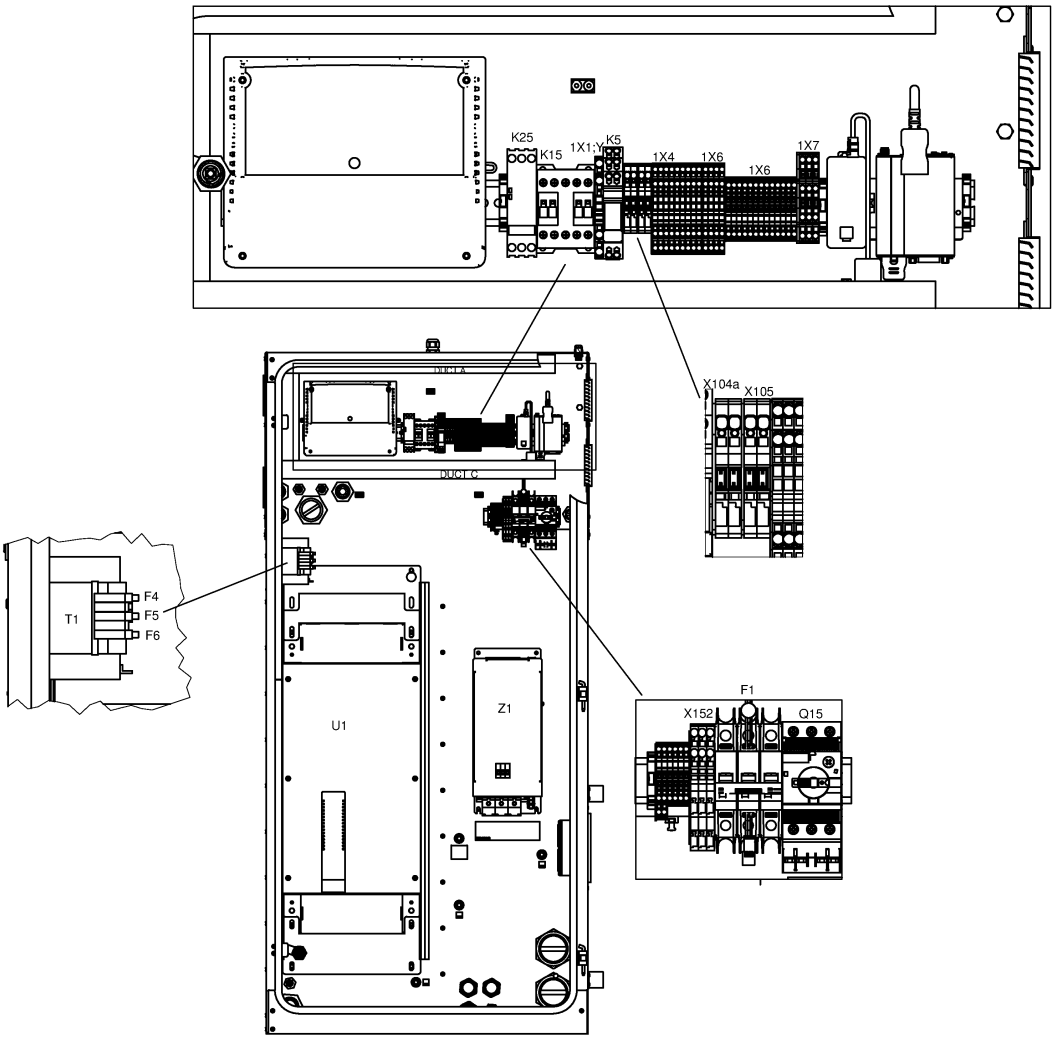

21.5 - Cubicle components GA 75L VSD+ - (200V-400V-500V/50Hz - IEC, 200V-380V-460V/60Hz - IEC, 230V-460V-575V/60Hz - UL-cUL) - Pack (20/07/2017 - 11/12/2018)

((((CAPPRM:AS1210 , CAPPRM:CE , CAPPRM:MHLW , CAPPRM:MOM) + MOVOL:400V , CAPPRM:CE + COOL:AIR + MOVOL:500V) + FREQ:50HZ , ((MOVOL:380V , MOVOL:460V) + CAPPRM:ASME , CAPPRM:MHLW + MOVOL:460V) + FREQ:60HZ , CAPPRM:MHLW + COOL:AIR + MOVOL:200V) + CAPPRE:IEC , ((MOVOL:230V , MOVOL:575V) + COOL:AIR , MOVOL:460V) + CAPPRE:ULCUL + CAPPRM:ASME + FREQ:60HZ) + IDRY:N + MODEL:GA75VP_16

Ref	Part Number	Qty	Name	Validity	EL
	1088 0039 38	2	TERMINAL	**(20/07/2017 - 20/08/2018)** ((((CAPPRM:AS1210 , CAPPRM:CE , CAPPRM:MHLW , CAPPRM:MOM) + MOVOL:400V , CAPPRM:CE + MOVOL:500V , CAPPRM:MHLW + MOVOL:200V) + FREQ:50HZ , ((MOVOL:200V , MOVOL:460V) + CAPPRM:MHLW , (MOVOL:380V , MOVOL:460V) + CAPPRM:ASME) + FREQ:60HZ) + CAPPRE:IEC , (MOVOL:230V , MOVOL:460V , MOVOL:575V) + CAPPRE:ULCUL + CAPPRM:ASME + FREQ:60HZ) + COOL:AIR **(21/08/2018 - 10/12/2018)** **(11/12/2018 - 11/12/2018)** ((((CAPPRM:AS1210 , CAPPRM:CE , CAPPRM:MHLW , CAPPRM:MOM) + MOVOL:400V , (CAPPRM:CE + MOVOL:500V , CAPPRM:MHLW + MOVOL:200V) + COOL:AIR) + FREQ:50HZ , ((CAPPRM:ASME , CAPPRM:MHLW) + COOL:WATER + MOVOL:460V , CAPPRM:ASME + MOVOL:380V , CAPPRM:MHLW + COOL:AIR + MOVOL:200V) + FREQ:60HZ) + CAPPRE:IEC , ((MOVOL:230V , MOVOL:575V) + COOL:AIR , MOVOL:460V) + CAPPRE:ULCUL + CAPPRM:ASME + FREQ:60HZ)	1X11:2,5
	1088 0039 40	1	PLATE	**(20/07/2017 - 20/08/2018)** ((((CAPPRM:AS1210 , CAPPRM:CE , CAPPRM:MHLW , CAPPRM:MOM) + MOVOL:400V , CAPPRM:CE + MOVOL:500V , CAPPRM:MHLW + MOVOL:200V) + FREQ:50HZ , ((MOVOL:200V , MOVOL:460V) + CAPPRM:MHLW , (MOVOL:380V , MOVOL:460V) + CAPPRM:ASME) + FREQ:60HZ) + CAPPRE:IEC , (MOVOL:230V , MOVOL:460V , MOVOL:575V) + CAPPRE:ULCUL + CAPPRM:ASME + FREQ:60HZ) + COOL:AIR **(21/08/2018 - 10/12/2018)** **(11/12/2018 - 11/12/2018)** ((((CAPPRM:AS1210 , CAPPRM:CE , CAPPRM:MHLW , CAPPRM:MOM) + MOVOL:400V , (CAPPRM:CE + MOVOL:500V , CAPPRM:MHLW + MOVOL:200V) + COOL:AIR) + FREQ:50HZ , ((CAPPRM:ASME , CAPPRM:MHLW) + COOL:WATER + MOVOL:460V , CAPPRM:ASME + MOVOL:380V , CAPPRM:MHLW + COOL:AIR + MOVOL:200V) + FREQ:60HZ) + CAPPRE:IEC , ((MOVOL:230V , MOVOL:575V) + COOL:AIR , MOVOL:460V) + CAPPRE:ULCUL + CAPPRM:ASME + FREQ:60HZ)	1X11
	1088 0039 34	4	TERMINAL	**(20/07/2017 - 20/08/2018)** ((((CAPPRM:AS1210 , CAPPRM:CE , CAPPRM:MHLW , CAPPRM:MOM) + MOVOL:400V , CAPPRM:CE + MOVOL:500V , CAPPRM:MHLW + MOVOL:200V) + FREQ:50HZ , ((MOVOL:200V , MOVOL:460V) + CAPPRM:MHLW , (MOVOL:380V , MOVOL:460V) + CAPPRM:ASME) + FREQ:60HZ) + CAPPRE:IEC , (MOVOL:230V , MOVOL:460V , MOVOL:575V) + CAPPRE:ULCUL + CAPPRM:ASME + FREQ:60HZ) + COOL:AIR **(21/08/2018 - 10/12/2018)** **(11/12/2018 - 11/12/2018)** ((((CAPPRM:AS1210 , CAPPRM:CE , CAPPRM:MHLW , CAPPRM:MOM) + MOVOL:400V , (CAPPRM:CE + MOVOL:500V , CAPPRM:MHLW + MOVOL:200V) + COOL:AIR) + FREQ:50HZ , ((CAPPRM:ASME , CAPPRM:MHLW) + COOL:WATER + MOVOL:460V , CAPPRM:ASME + MOVOL:380V , CAPPRM:MHLW + COOL:AIR + MOVOL:200V) + FREQ:60HZ) + CAPPRE:IEC , ((MOVOL:230V , MOVOL:575V) + COOL:AIR , MOVOL:460V) + CAPPRE:ULCUL + CAPPRM:ASME + FREQ:60HZ)	

Legend:

CAPPRE:IEC - Component approval electrical:IEC
CAPPRE:ULCUL - Component approval electrical:UL/cUL
CAPPRM:AS1210 - Component approval mechanical:AS1210
CAPPRM:ASME - Component approval mechanical:ASME
CAPPRM:CE - Component approval mechanical:CE
CAPPRM:MHLW - Component approval mechanical:MHLW
CAPPRM:MOM - Component approval mechanical:MOM
COOL:AIR - Cooling:Air cooled
COOL:WATER - Cooling:Water cooled
FREQ:50HZ - Frequency:50 Hz
FREQ:60HZ - Frequency:60 Hz
IDRY:N - Integrated dryer:No
MODEL:GA75VP_16 - Model:GA 75VSD+
MOVOL:200V - Supply voltage:200 V
MOVOL:230V - Supply voltage:230 V
MOVOL:380V - Supply voltage:380 V
MOVOL:400V - Supply voltage:400 V
MOVOL:460V - Supply voltage:460 V
MOVOL:500V - Supply voltage:500 V
MOVOL:575V - Supply voltage:575 V

21.5 - Cubicle components GA 75L VSD+ - (200V-400V-500V/50Hz - IEC, 200V-380V-460V/60Hz - IEC, 230V-460V-575V/60Hz - UL-cUL) - Pack (20/07/2017 - 11/12/2018)

((((CAPPRM:AS1210 , CAPPRM:CE , CAPPRM:MHLW , CAPPRM:MOM) + MOVOL:400V , CAPPRM:CE + COOL:AIR + MOVOL:500V) + FREQ:50HZ , ((MOVOL:380V , MOVOL:460V) + CAPPRM:ASME , CAPPRM:MHLW + MOVOL:460V) + FREQ:60HZ , CAPPRM:MHLW + COOL:AIR + MOVOL:200V) + CAPPRE:IEC , ((MOVOL:230V , MOVOL:575V) + COOL:AIR , MOVOL:460V) + CAPPRE:ULCUL + CAPPRM:ASME + FREQ:60HZ) + IDRY:N + MODEL:GA75VP_16

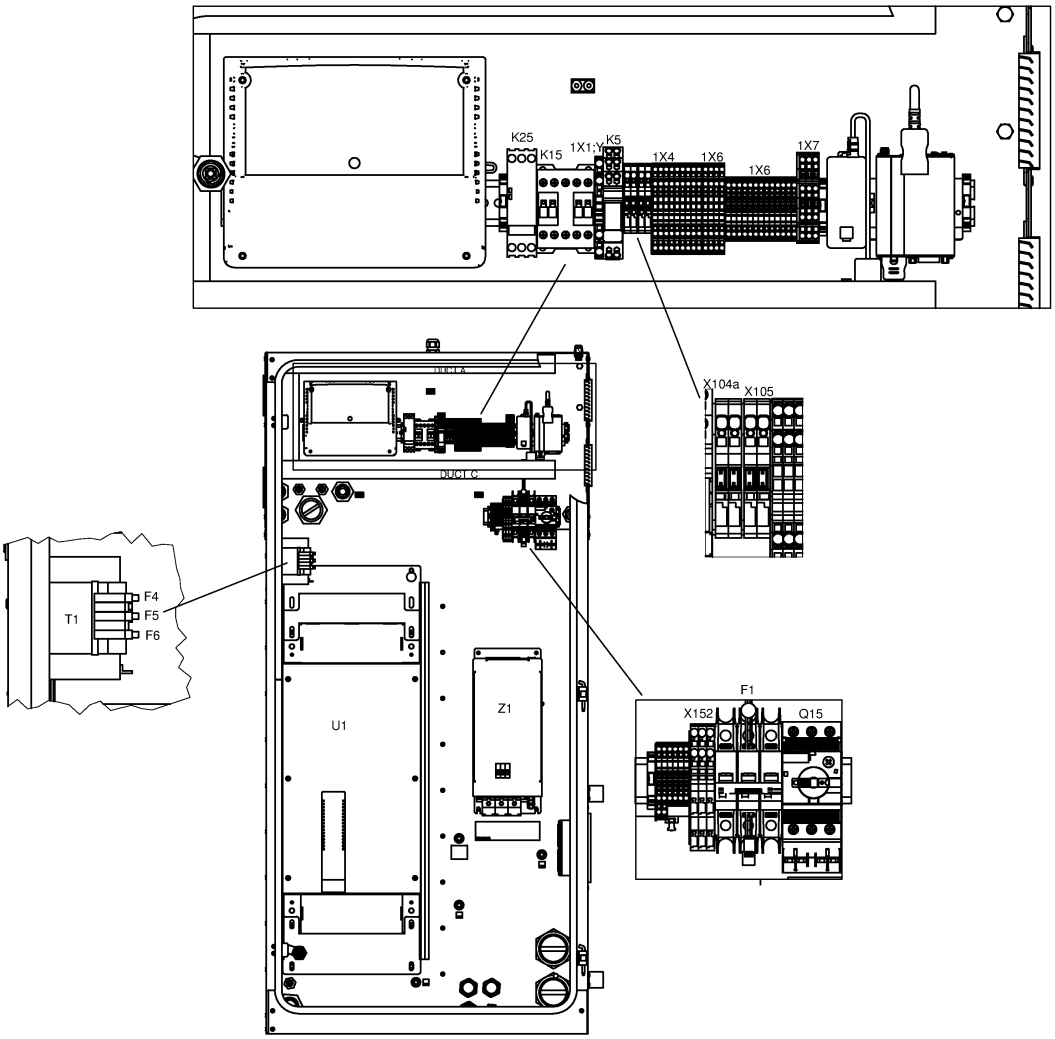

21.5 - Cubicle components GA 75L VSD+ - (200V-400V-500V/50Hz - IEC, 200V-380V-460V/60Hz - IEC, 230V-460V-575V/60Hz - UL-cUL) - Pack (20/07/2017 - 11/12/2018)

((((CAPPRM:AS1210 , CAPPRM:CE , CAPPRM:MHLW , CAPPRM:MOM) + MOVOL:400V , CAPPRM:CE + COOL:AIR + MOVOL:500V) + FREQ:50HZ , ((MOVOL:380V , MOVOL:460V) + CAPPRM:ASME , CAPPRM:MHLW + MOVOL:460V) + FREQ:60HZ , CAPPRM:MHLW + COOL:AIR + MOVOL:200V) + CAPPRE:IEC , ((MOVOL:230V , MOVOL:575V) + COOL:AIR , MOVOL:460V) + CAPPRE:ULCUL + CAPPRM:ASME + FREQ:60HZ) + IDRY:N + MODEL:GA75VP_16

Ref	Part Number	Qty	Name	Validity	EL
	Electrical legend:	1X11:30,301,34			
	1088 0039 35	1	PLATE	**(20/07/2017 - 20/08/2018)** ((((CAPPRM:AS1210 , CAPPRM:CE , CAPPRM:MHLW , CAPPRM:MOM) + MOVOL:400V , CAPPRM:CE + MOVOL:500V , CAPPRM:MHLW + MOVOL:200V) + FREQ:50HZ , ((MOVOL:200V , MOVOL:460V) + CAPPRM:MHLW , (MOVOL:380V , MOVOL:460V) + CAPPRM:ASME) + FREQ:60HZ) + CAPPRE:IEC , (MOVOL:230V , MOVOL:460V , MOVOL:575V) + CAPPRE:ULCUL + CAPPRM:ASME + FREQ:60HZ) + COOL:AIR **(21/08/2018 - 10/12/2018)** **(11/12/2018 - 11/12/2018)** ((((CAPPRM:AS1210 , CAPPRM:CE , CAPPRM:MHLW , CAPPRM:MOM) + MOVOL:400V , (CAPPRM:CE + MOVOL:500V , CAPPRM:MHLW + MOVOL:200V) + COOL:AIR) + FREQ:50HZ , ((CAPPRM:ASME , CAPPRM:MHLW) + COOL:WATER + MOVOL:460V , CAPPRM:ASME + MOVOL:380V , CAPPRM:MHLW + COOL:AIR + MOVOL:200V) + FREQ:60HZ) + CAPPRE:IEC , ((MOVOL:230V , MOVOL:575V) + COOL:AIR , MOVOL:460V) + CAPPRE:ULCUL + CAPPRM:ASME + FREQ:60HZ)	1X11
	1088 0039 04	2	TERMINAL	**(20/07/2017 - 20/08/2018)** ((((CAPPRM:AS1210 , CAPPRM:CE , CAPPRM:MHLW , CAPPRM:MOM) + MOVOL:400V , CAPPRM:CE + MOVOL:500V , CAPPRM:MHLW + MOVOL:200V) + FREQ:50HZ , ((MOVOL:200V , MOVOL:460V) + CAPPRM:MHLW , (MOVOL:380V , MOVOL:460V) + CAPPRM:ASME) + FREQ:60HZ) + CAPPRE:IEC , (MOVOL:230V , MOVOL:460V , MOVOL:575V) + CAPPRE:ULCUL + CAPPRM:ASME + FREQ:60HZ) + COOL:AIR **(21/08/2018 - 10/12/2018)** **(11/12/2018 - 11/12/2018)** ((((CAPPRM:AS1210 , CAPPRM:CE , CAPPRM:MHLW , CAPPRM:MOM) + MOVOL:400V , (CAPPRM:CE + MOVOL:500V , CAPPRM:MHLW + MOVOL:200V) + COOL:AIR) + FREQ:50HZ , ((CAPPRM:ASME , CAPPRM:MHLW) + COOL:WATER + MOVOL:460V , CAPPRM:ASME + MOVOL:380V , CAPPRM:MHLW + COOL:AIR + MOVOL:200V) + FREQ:60HZ) + CAPPRE:IEC , ((MOVOL:230V , MOVOL:575V) + COOL:AIR , MOVOL:460V) + CAPPRE:ULCUL + CAPPRM:ASME + FREQ:60HZ)	X104a

Legend:

CAPPRE:IEC - Component approval electrical:IEC
CAPPRE:ULCUL - Component approval electrical:UL/cUL
CAPPRM:AS1210 - Component approval mechanical:AS1210
CAPPRM:ASME - Component approval mechanical:ASME
CAPPRM:CE - Component approval mechanical:CE
CAPPRM:MHLW - Component approval mechanical:MHLW
CAPPRM:MOM - Component approval mechanical:MOM
COOL:AIR - Cooling:Air cooled
COOL:WATER - Cooling:Water cooled
FREQ:50HZ - Frequency:50 Hz
FREQ:60HZ - Frequency:60 Hz
IDRY:N - Integrated dryer:No
MODEL:GA75VP_16 - Model:GA 75VSD+
MOVOL:200V - Supply voltage:200 V
MOVOL:230V - Supply voltage:230 V
MOVOL:380V - Supply voltage:380 V
MOVOL:400V - Supply voltage:400 V
MOVOL:460V - Supply voltage:460 V
MOVOL:500V - Supply voltage:500 V
MOVOL:575V - Supply voltage:575 V

21.5 - Cubicle components GA 75L VSD+ - (200V-400V-500V/50Hz - IEC, 200V-380V-460V/60Hz - IEC, 230V-460V-575V/60Hz - UL-cUL) - Pack (20/07/2017 - 11/12/2018)

((((CAPPRM:AS1210 , CAPPRM:CE , CAPPRM:MHLW , CAPPRM:MOM) + MOVOL:400V , CAPPRM:CE + COOL:AIR + MOVOL:500V) + FREQ:50HZ , ((MOVOL:380V , MOVOL:460V) + CAPPRM:ASME , CAPPRM:MHLW + MOVOL:460V) + FREQ:60HZ , CAPPRM:MHLW + COOL:AIR + MOVOL:200V) + CAPPRE:IEC , ((MOVOL:230V , MOVOL:575V) + COOL:AIR , MOVOL:460V) + CAPPRE:ULCUL + CAPPRM:ASME + FREQ:60HZ) + IDRY:N + MODEL:GA75VP_16

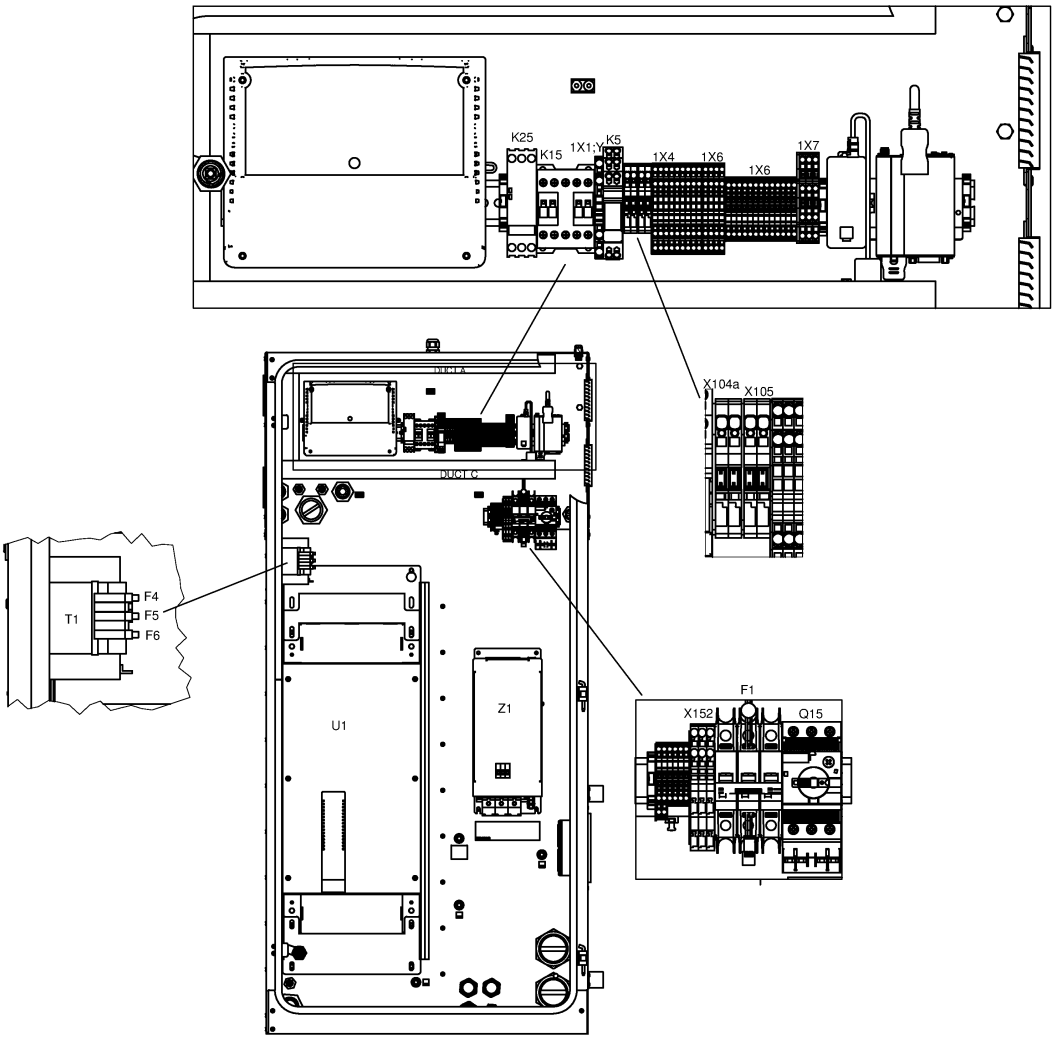

21.5 - Cubicle components GA 75L VSD+ - (200V-400V-500V/50Hz - IEC, 200V-380V-460V/60Hz - IEC, 230V-460V-575V/60Hz - UL-cUL) - Pack (20/07/2017 - 11/12/2018)

((((CAPPRM:AS1210 , CAPPRM:CE , CAPPRM:MHLW , CAPPRM:MOM) + MOVOL:400V , CAPPRM:CE + COOL:AIR + MOVOL:500V) + FREQ:50HZ , ((MOVOL:380V , MOVOL:460V) + CAPPRM:ASME , CAPPRM:MHLW + MOVOL:460V) + FREQ:60HZ , CAPPRM:MHLW + COOL:AIR + MOVOL:200V) + CAPPRE:IEC , ((MOVOL:230V , MOVOL:575V) + COOL:AIR , MOVOL:460V) + CAPPRE:ULCUL + CAPPRM:ASME + FREQ:60HZ) + IDRY:N + MODEL:GA75VP_16

Ref	Part Number	Qty	Name	Validity	EL
	1088 0037 99	2	PIN	**(20/07/2017 - 20/08/2018)** ((((CAPPRM:AS1210 , CAPPRM:CE , CAPPRM:MHLW , CAPPRM:MOM) + MOVOL:400V , CAPPRM:CE + MOVOL:500V , CAPPRM:MHLW + MOVOL:200V) + FREQ:50HZ , ((MOVOL:200V , MOVOL:460V) + CAPPRM:MHLW , (MOVOL:380V , MOVOL:460V) + CAPPRM:ASME) + FREQ:60HZ) + CAPPRE:IEC , (MOVOL:230V , MOVOL:460V , MOVOL:575V) + CAPPRE:ULCUL + CAPPRM:ASME + FREQ:60HZ) + COOL:AIR **(21/08/2018 - 10/12/2018)** **(11/12/2018 - 11/12/2018)** ((((CAPPRM:AS1210 , CAPPRM:CE , CAPPRM:MHLW , CAPPRM:MOM) + MOVOL:400V , (CAPPRM:CE + MOVOL:500V , CAPPRM:MHLW + MOVOL:200V) + COOL:AIR) + FREQ:50HZ , ((CAPPRM:ASME , CAPPRM:MHLW) + COOL:WATER + MOVOL:460V , CAPPRM:ASME + MOVOL:380V , CAPPRM:MHLW + COOL:AIR + MOVOL:200V) + FREQ:60HZ) + CAPPRE:IEC , ((MOVOL:230V , MOVOL:575V) + COOL:AIR , MOVOL:460V) + CAPPRE:ULCUL + CAPPRM:ASME + FREQ:60HZ)	X104a/X105
	1088 0039 02	1	PLATE	**(20/07/2017 - 20/08/2018)** ((((CAPPRM:AS1210 , CAPPRM:CE , CAPPRM:MHLW , CAPPRM:MOM) + MOVOL:400V , CAPPRM:CE + MOVOL:500V , CAPPRM:MHLW + MOVOL:200V) + FREQ:50HZ , ((MOVOL:200V , MOVOL:460V) + CAPPRM:MHLW , (MOVOL:380V , MOVOL:460V) + CAPPRM:ASME) + FREQ:60HZ) + CAPPRE:IEC , (MOVOL:230V , MOVOL:460V , MOVOL:575V) + CAPPRE:ULCUL + CAPPRM:ASME + FREQ:60HZ) + COOL:AIR **(21/08/2018 - 10/12/2018)** **(11/12/2018 - 11/12/2018)** ((((CAPPRM:AS1210 , CAPPRM:CE , CAPPRM:MHLW , CAPPRM:MOM) + MOVOL:400V , (CAPPRM:CE + MOVOL:500V , CAPPRM:MHLW + MOVOL:200V) + COOL:AIR) + FREQ:50HZ , ((CAPPRM:ASME , CAPPRM:MHLW) + COOL:WATER + MOVOL:460V , CAPPRM:ASME + MOVOL:380V , CAPPRM:MHLW + COOL:AIR + MOVOL:200V) + FREQ:60HZ) + CAPPRE:IEC , ((MOVOL:230V , MOVOL:575V) + COOL:AIR , MOVOL:460V) + CAPPRE:ULCUL + CAPPRM:ASME + FREQ:60HZ)	X104a
	1088 0039 04	2	TERMINAL	**(20/07/2017 - 20/08/2018)** ((((CAPPRM:AS1210 , CAPPRM:CE , CAPPRM:MHLW , CAPPRM:MOM) + MOVOL:400V , CAPPRM:CE + MOVOL:500V , CAPPRM:MHLW + MOVOL:200V) + FREQ:50HZ , ((MOVOL:200V , MOVOL:460V) + CAPPRM:MHLW , (MOVOL:380V , MOVOL:460V) + CAPPRM:ASME) + FREQ:60HZ) + CAPPRE:IEC , (MOVOL:230V , MOVOL:460V , MOVOL:575V) + CAPPRE:ULCUL + CAPPRM:ASME + FREQ:60HZ) + COOL:AIR **(21/08/2018 - 10/12/2018)** **(11/12/2018 - 11/12/2018)** ((((CAPPRM:AS1210 , CAPPRM:CE , CAPPRM:MHLW , CAPPRM:MOM) + MOVOL:400V , (CAPPRM:CE + MOVOL:500V , CAPPRM:MHLW + MOVOL:200V) + COOL:AIR) + FREQ:50HZ , ((CAPPRM:ASME , CAPPRM:MHLW) + COOL:WATER + MOVOL:460V , CAPPRM:ASME + MOVOL:380V , CAPPRM:MHLW + COOL:AIR + MOVOL:200V) + FREQ:60HZ) + CAPPRE:IEC , ((MOVOL:230V , MOVOL:575V) + COOL:AIR , MOVOL:460V) + CAPPRE:ULCUL + CAPPRM:ASME + FREQ:60HZ)	

Legend:

CAPPRE:IEC - Component approval electrical:IEC
CAPPRE:ULCUL - Component approval electrical:UL/cUL
CAPPRM:AS1210 - Component approval mechanical:AS1210
CAPPRM:ASME - Component approval mechanical:ASME
CAPPRM:CE - Component approval mechanical:CE
CAPPRM:MHLW - Component approval mechanical:MHLW
CAPPRM:MOM - Component approval mechanical:MOM
COOL:AIR - Cooling:Air cooled
COOL:WATER - Cooling:Water cooled
FREQ:50HZ - Frequency:50 Hz
FREQ:60HZ - Frequency:60 Hz
IDRY:N - Integrated dryer:No
MODEL:GA75VP_16 - Model:GA 75VSD+
MOVOL:200V - Supply voltage:200 V
MOVOL:230V - Supply voltage:230 V
MOVOL:380V - Supply voltage:380 V
MOVOL:400V - Supply voltage:400 V
MOVOL:460V - Supply voltage:460 V
MOVOL:500V - Supply voltage:500 V
MOVOL:575V - Supply voltage:575 V

21.5 - Cubicle components GA 75L VSD+ - (200V-400V-500V/50Hz - IEC, 200V-380V-460V/60Hz - IEC, 230V-460V-575V/60Hz - UL-cUL) - Pack (20/07/2017 - 11/12/2018)

((((CAPPRM:AS1210 , CAPPRM:CE , CAPPRM:MHLW , CAPPRM:MOM) + MOVOL:400V , CAPPRM:CE + COOL:AIR + MOVOL:500V) + FREQ:50HZ , ((MOVOL:380V , MOVOL:460V) + CAPPRM:ASME , CAPPRM:MHLW + MOVOL:460V) + FREQ:60HZ , CAPPRM:MHLW + COOL:AIR + MOVOL:200V) + CAPPRE:IEC , ((MOVOL:230V , MOVOL:575V) + COOL:AIR , MOVOL:460V) + CAPPRE:ULCUL + CAPPRM:ASME + FREQ:60HZ) + IDRY:N + MODEL:GA75VP_16

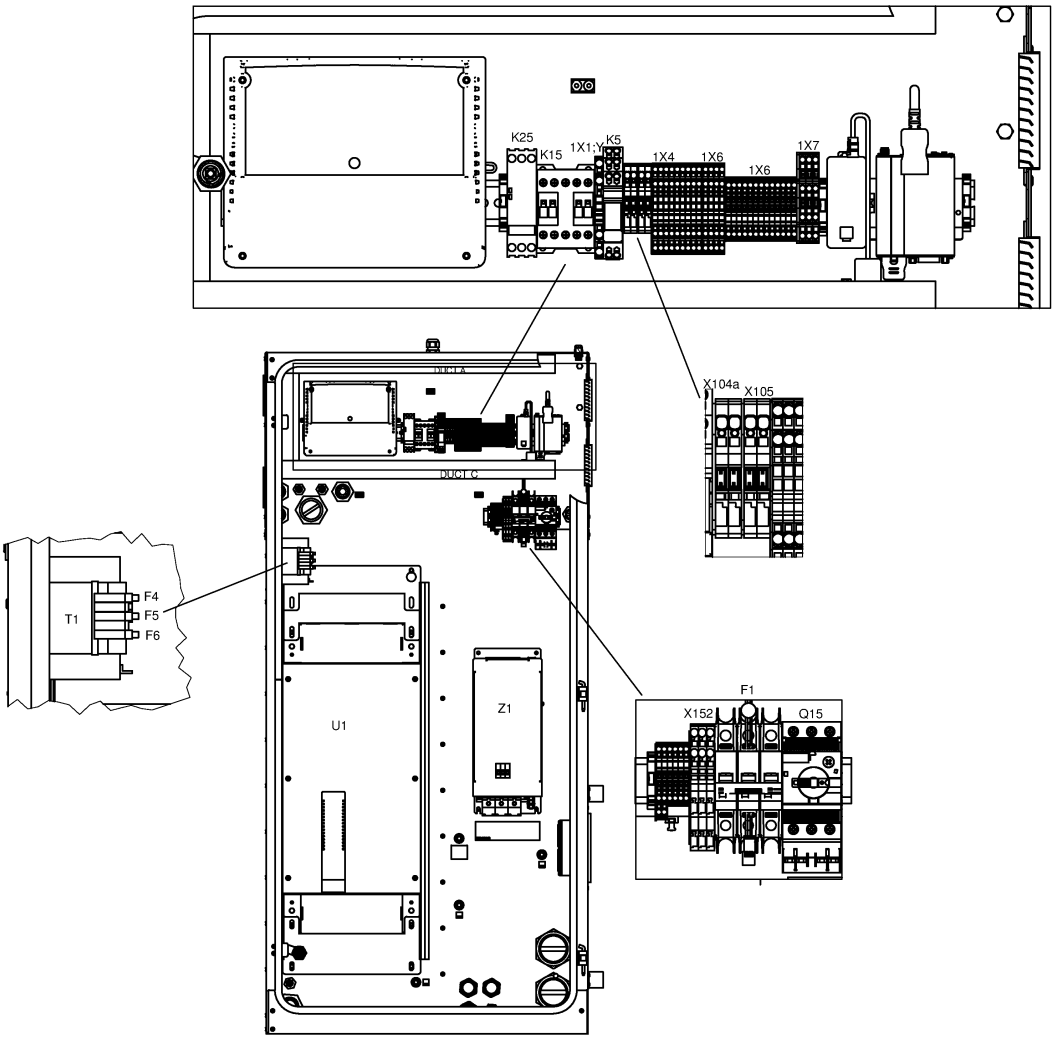

21.5 - Cubicle components GA 75L VSD+ - (200V-400V-500V/50Hz - IEC, 200V-380V-460V/60Hz - IEC, 230V-460V-575V/60Hz - UL-cUL) - Pack (20/07/2017 - 11/12/2018)

((((CAPPRM:AS1210 , CAPPRM:CE , CAPPRM:MHLW , CAPPRM:MOM) + MOVOL:400V , CAPPRM:CE + COOL:AIR + MOVOL:500V) + FREQ:50HZ , ((MOVOL:380V , MOVOL:460V) + CAPPRM:ASME , CAPPRM:MHLW + MOVOL:460V) + FREQ:60HZ , CAPPRM:MHLW + COOL:AIR + MOVOL:200V) + CAPPRE:IEC , ((MOVOL:230V , MOVOL:575V) + COOL:AIR , MOVOL:460V) + CAPPRE:ULCUL + CAPPRM:ASME + FREQ:60HZ) + IDRY:N + MODEL:GA75VP_16

Ref	Part Number	Qty	Name	Validity	EL
	1088 0039 02	1	PLATE	**(20/07/2017 - 20/08/2018)** ((((CAPPRM:AS1210 , CAPPRM:CE , CAPPRM:MHLW , CAPPRM:MOM) + MOVOL:400V , CAPPRM:CE + MOVOL:500V , CAPPRM:MHLW + MOVOL:200V) + FREQ:50HZ , ((MOVOL:200V , MOVOL:460V) + CAPPRM:MHLW , (MOVOL:380V , MOVOL:460V) + CAPPRM:ASME) + FREQ:60HZ) + CAPPRE:IEC , (MOVOL:230V , MOVOL:460V , MOVOL:575V) + CAPPRE:ULCUL + CAPPRM:ASME + FREQ:60HZ) + COOL:AIR **(21/08/2018 - 10/12/2018)** **(11/12/2018 - 11/12/2018)** ((((CAPPRM:AS1210 , CAPPRM:CE , CAPPRM:MHLW , CAPPRM:MOM) + MOVOL:400V , (CAPPRM:CE + MOVOL:500V , CAPPRM:MHLW + MOVOL:200V) + COOL:AIR) + FREQ:50HZ , ((CAPPRM:ASME , CAPPRM:MHLW) + COOL:WATER + MOVOL:460V , CAPPRM:ASME + MOVOL:380V , CAPPRM:MHLW + COOL:AIR + MOVOL:200V) + FREQ:60HZ) + CAPPRE:IEC , ((MOVOL:230V , MOVOL:575V) + COOL:AIR , MOVOL:460V) + CAPPRE:ULCUL + CAPPRM:ASME + FREQ:60HZ)	
	1088 0039 34	13	TERMINAL	**(20/07/2017 - 20/08/2018)** ((((CAPPRM:AS1210 , CAPPRM:CE , CAPPRM:MHLW , CAPPRM:MOM) + MOVOL:400V , CAPPRM:CE + MOVOL:500V , CAPPRM:MHLW + MOVOL:200V) + FREQ:50HZ , ((MOVOL:200V , MOVOL:460V) + CAPPRM:MHLW , (MOVOL:380V , MOVOL:460V) + CAPPRM:ASME) + FREQ:60HZ) + CAPPRE:IEC , (MOVOL:230V , MOVOL:460V , MOVOL:575V) + CAPPRE:ULCUL + CAPPRM:ASME + FREQ:60HZ) + COOL:AIR **(21/08/2018 - 10/12/2018)** **(11/12/2018 - 11/12/2018)** ((((CAPPRM:AS1210 , CAPPRM:CE , CAPPRM:MHLW , CAPPRM:MOM) + MOVOL:400V , (CAPPRM:CE + MOVOL:500V , CAPPRM:MHLW + MOVOL:200V) + COOL:AIR) + FREQ:50HZ , ((CAPPRM:ASME , CAPPRM:MHLW) + COOL:WATER + MOVOL:460V , CAPPRM:ASME + MOVOL:380V , CAPPRM:MHLW + COOL:AIR + MOVOL:200V) + FREQ:60HZ) + CAPPRE:IEC , ((MOVOL:230V , MOVOL:575V) + COOL:AIR , MOVOL:460V) + CAPPRE:ULCUL + CAPPRM:ASME + FREQ:60HZ)	1X6
	1088 0037 69	3	CONNECTOR	**(20/07/2017 - 20/08/2018)** ((((CAPPRM:AS1210 , CAPPRM:CE , CAPPRM:MHLW , CAPPRM:MOM) + MOVOL:400V , CAPPRM:CE + MOVOL:500V , CAPPRM:MHLW + MOVOL:200V) + FREQ:50HZ , ((MOVOL:200V , MOVOL:460V) + CAPPRM:MHLW , (MOVOL:380V , MOVOL:460V) + CAPPRM:ASME) + FREQ:60HZ) + CAPPRE:IEC , (MOVOL:230V , MOVOL:460V , MOVOL:575V) + CAPPRE:ULCUL + CAPPRM:ASME + FREQ:60HZ) + COOL:AIR **(21/08/2018 - 10/12/2018)** **(11/12/2018 - 11/12/2018)** ((((CAPPRM:AS1210 , CAPPRM:CE , CAPPRM:MHLW , CAPPRM:MOM) + MOVOL:400V , (CAPPRM:CE + MOVOL:500V , CAPPRM:MHLW + MOVOL:200V) + COOL:AIR) + FREQ:50HZ , ((CAPPRM:ASME , CAPPRM:MHLW) + COOL:WATER + MOVOL:460V , CAPPRM:ASME + MOVOL:380V , CAPPRM:MHLW + COOL:AIR + MOVOL:200V) + FREQ:60HZ) + CAPPRE:IEC , ((MOVOL:230V , MOVOL:575V) + COOL:AIR , MOVOL:460V) + CAPPRE:ULCUL + CAPPRM:ASME + FREQ:60HZ)	1X7

Legend:

CAPPRE:IEC - Component approval electrical:IEC
CAPPRE:ULCUL - Component approval electrical:UL/cUL
CAPPRM:AS1210 - Component approval mechanical:AS1210
CAPPRM:ASME - Component approval mechanical:ASME
CAPPRM:CE - Component approval mechanical:CE
CAPPRM:MHLW - Component approval mechanical:MHLW
CAPPRM:MOM - Component approval mechanical:MOM
COOL:AIR - Cooling:Air cooled
COOL:WATER - Cooling:Water cooled
FREQ:50HZ - Frequency:50 Hz
FREQ:60HZ - Frequency:60 Hz
IDRY:N - Integrated dryer:No
MODEL:GA75VP_16 - Model:GA 75VSD+
MOVOL:200V - Supply voltage:200 V
MOVOL:230V - Supply voltage:230 V
MOVOL:380V - Supply voltage:380 V
MOVOL:400V - Supply voltage:400 V
MOVOL:460V - Supply voltage:460 V
MOVOL:500V - Supply voltage:500 V
MOVOL:575V - Supply voltage:575 V

21.5 - Cubicle components GA 75L VSD+ - (200V-400V-500V/50Hz - IEC, 200V-380V-460V/60Hz - IEC, 230V-460V-575V/60Hz - UL-cUL) - Pack (20/07/2017 - 11/12/2018)

((((CAPPRM:AS1210 , CAPPRM:CE , CAPPRM:MHLW , CAPPRM:MOM) + MOVOL:400V , CAPPRM:CE + COOL:AIR + MOVOL:500V) + FREQ:50HZ , ((MOVOL:380V , MOVOL:460V) + CAPPRM:ASME , CAPPRM:MHLW + MOVOL:460V) + FREQ:60HZ , CAPPRM:MHLW + COOL:AIR + MOVOL:200V) + CAPPRE:IEC , ((MOVOL:230V , MOVOL:575V) + COOL:AIR , MOVOL:460V) + CAPPRE:ULCUL + CAPPRM:ASME + FREQ:60HZ) + IDRY:N + MODEL:GA75VP_16

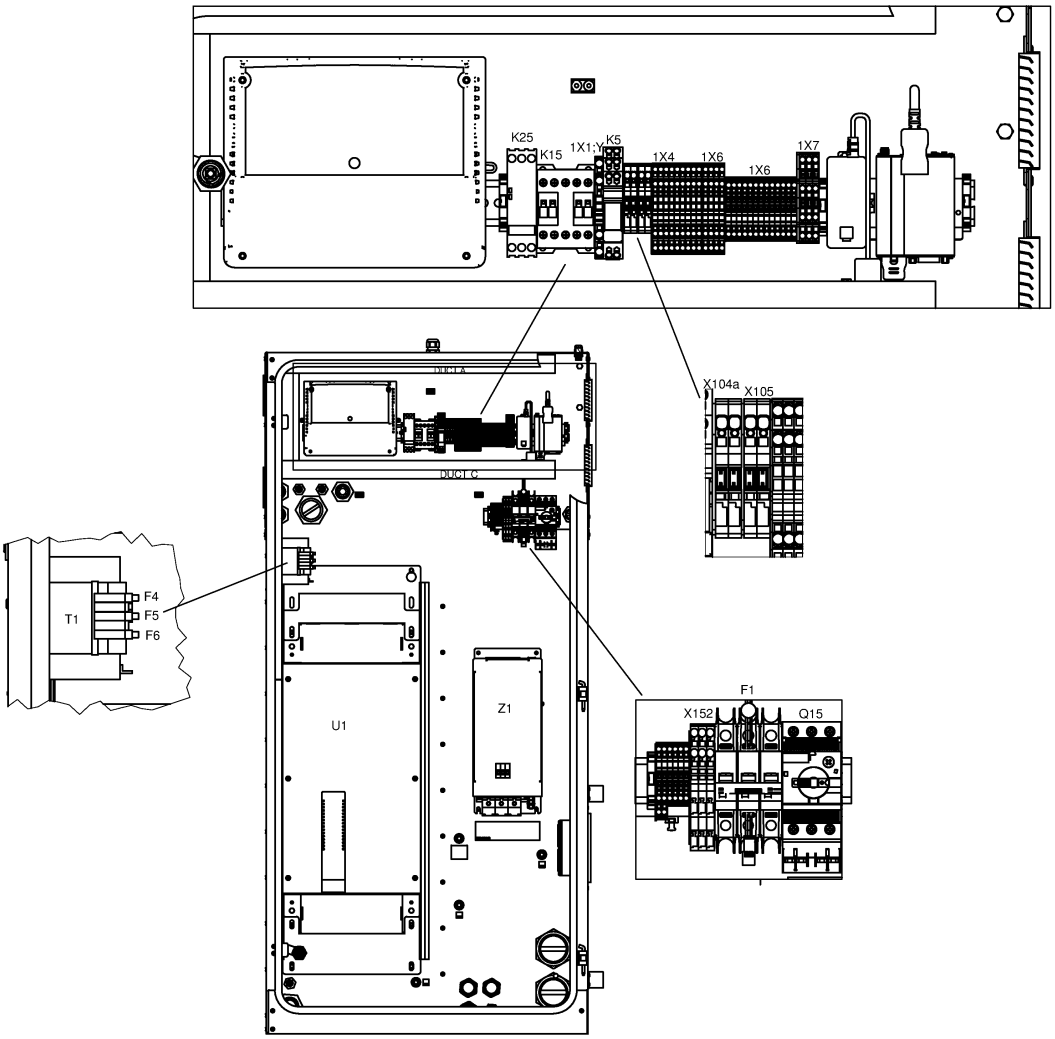

21.5 - Cubicle components GA 75L VSD+ - (200V-400V-500V/50Hz - IEC, 200V-380V-460V/60Hz - IEC, 230V-460V-575V/60Hz - UL-cUL) - Pack (20/07/2017 - 11/12/2018)

((((CAPPRM:AS1210 , CAPPRM:CE , CAPPRM:MHLW , CAPPRM:MOM) + MOVOL:400V , CAPPRM:CE + COOL:AIR + MOVOL:500V) + FREQ:50HZ , ((MOVOL:380V , MOVOL:460V) + CAPPRM:ASME , CAPPRM:MHLW + MOVOL:460V) + FREQ:60HZ , CAPPRM:MHLW + COOL:AIR + MOVOL:200V) + CAPPRE:IEC , ((MOVOL:230V , MOVOL:575V) + COOL:AIR , MOVOL:460V) + CAPPRE:ULCUL + CAPPRM:ASME + FREQ:60HZ) + IDRY:N + MODEL:GA75VP_16

Ref	Part Number	Qty	Name	Validity	EL
	1088 0039 35	1	PLATE	**(20/07/2017 - 20/08/2018)** ((((CAPPRM:AS1210 , CAPPRM:CE , CAPPRM:MHLW , CAPPRM:MOM) + MOVOL:400V , CAPPRM:CE + MOVOL:500V , CAPPRM:MHLW + MOVOL:200V) + FREQ:50HZ , ((MOVOL:200V , MOVOL:460V) + CAPPRM:MHLW , (MOVOL:380V , MOVOL:460V) + CAPPRM:ASME) + FREQ:60HZ) + CAPPRE:IEC , (MOVOL:230V , MOVOL:460V , MOVOL:575V) + CAPPRE:ULCUL + CAPPRM:ASME + FREQ:60HZ) + COOL:AIR **(21/08/2018 - 10/12/2018)** **(11/12/2018 - 11/12/2018)** ((((CAPPRM:AS1210 , CAPPRM:CE , CAPPRM:MHLW , CAPPRM:MOM) + MOVOL:400V , (CAPPRM:CE + MOVOL:500V , CAPPRM:MHLW + MOVOL:200V) + COOL:AIR) + FREQ:50HZ , ((CAPPRM:ASME , CAPPRM:MHLW) + COOL:WATER + MOVOL:460V , CAPPRM:ASME + MOVOL:380V , CAPPRM:MHLW + COOL:AIR + MOVOL:200V) + FREQ:60HZ) + CAPPRE:IEC , ((MOVOL:230V , MOVOL:575V) + COOL:AIR , MOVOL:460V) + CAPPRE:ULCUL + CAPPRM:ASME + FREQ:60HZ)	1X6
	1088 0040 37	1	END PLATE	**(20/07/2017 - 20/08/2018)** ((((CAPPRM:AS1210 , CAPPRM:CE , CAPPRM:MHLW , CAPPRM:MOM) + MOVOL:400V , CAPPRM:CE + MOVOL:500V , CAPPRM:MHLW + MOVOL:200V) + FREQ:50HZ , ((MOVOL:200V , MOVOL:460V) + CAPPRM:MHLW , (MOVOL:380V , MOVOL:460V) + CAPPRM:ASME) + FREQ:60HZ) + CAPPRE:IEC , (MOVOL:230V , MOVOL:460V , MOVOL:575V) + CAPPRE:ULCUL + CAPPRM:ASME + FREQ:60HZ) + COOL:AIR **(21/08/2018 - 10/12/2018)** **(11/12/2018 - 11/12/2018)** ((((CAPPRM:AS1210 , CAPPRM:CE , CAPPRM:MHLW , CAPPRM:MOM) + MOVOL:400V , (CAPPRM:CE + MOVOL:500V , CAPPRM:MHLW + MOVOL:200V) + COOL:AIR) + FREQ:50HZ , ((CAPPRM:ASME , CAPPRM:MHLW) + COOL:WATER + MOVOL:460V , CAPPRM:ASME + MOVOL:380V , CAPPRM:MHLW + COOL:AIR + MOVOL:200V) + FREQ:60HZ) + CAPPRE:IEC , ((MOVOL:230V , MOVOL:575V) + COOL:AIR , MOVOL:460V) + CAPPRE:ULCUL + CAPPRM:ASME + FREQ:60HZ)	1X7
	1088 0039 36	9	TERMINAL	**(20/07/2017 - 20/08/2018)** ((((CAPPRM:AS1210 , CAPPRM:CE , CAPPRM:MHLW , CAPPRM:MOM) + MOVOL:400V , CAPPRM:CE + MOVOL:500V , CAPPRM:MHLW + MOVOL:200V) + FREQ:50HZ , ((MOVOL:200V , MOVOL:460V) + CAPPRM:MHLW , (MOVOL:380V , MOVOL:460V) + CAPPRM:ASME) + FREQ:60HZ) + CAPPRE:IEC , (MOVOL:230V , MOVOL:460V , MOVOL:575V) + CAPPRE:ULCUL + CAPPRM:ASME + FREQ:60HZ) + COOL:AIR **(21/08/2018 - 10/12/2018)** **(11/12/2018 - 11/12/2018)** ((((CAPPRM:AS1210 , CAPPRM:CE , CAPPRM:MHLW , CAPPRM:MOM) + MOVOL:400V , (CAPPRM:CE + MOVOL:500V , CAPPRM:MHLW + MOVOL:200V) + COOL:AIR) + FREQ:50HZ , ((CAPPRM:ASME , CAPPRM:MHLW) + COOL:WATER + MOVOL:460V , CAPPRM:ASME + MOVOL:380V , CAPPRM:MHLW + COOL:AIR + MOVOL:200V) + FREQ:60HZ) + CAPPRE:IEC , ((MOVOL:230V , MOVOL:575V) + COOL:AIR , MOVOL:460V) + CAPPRE:ULCUL + CAPPRM:ASME + FREQ:60HZ)	1X4

Legend:

CAPPRE:IEC - Component approval electrical:IEC
CAPPRE:ULCUL - Component approval electrical:UL/cUL
CAPPRM:AS1210 - Component approval mechanical:AS1210
CAPPRM:ASME - Component approval mechanical:ASME
CAPPRM:CE - Component approval mechanical:CE
CAPPRM:MHLW - Component approval mechanical:MHLW
CAPPRM:MOM - Component approval mechanical:MOM
COOL:AIR - Cooling:Air cooled
COOL:WATER - Cooling:Water cooled
FREQ:50HZ - Frequency:50 Hz
FREQ:60HZ - Frequency:60 Hz
IDRY:N - Integrated dryer:No
MODEL:GA75VP_16 - Model:GA 75VSD+
MOVOL:200V - Supply voltage:200 V
MOVOL:230V - Supply voltage:230 V
MOVOL:380V - Supply voltage:380 V
MOVOL:400V - Supply voltage:400 V
MOVOL:460V - Supply voltage:460 V
MOVOL:500V - Supply voltage:500 V
MOVOL:575V - Supply voltage:575 V

21.5 - Cubicle components GA 75L VSD+ - (200V-400V-500V/50Hz - IEC, 200V-380V-460V/60Hz - IEC, 230V-460V-575V/60Hz - UL-cUL) - Pack (20/07/2017 - 11/12/2018)

((((CAPPRM:AS1210 , CAPPRM:CE , CAPPRM:MHLW , CAPPRM:MOM) + MOVOL:400V , CAPPRM:CE + COOL:AIR + MOVOL:500V) + FREQ:50HZ , ((MOVOL:380V , MOVOL:460V) + CAPPRM:ASME , CAPPRM:MHLW + MOVOL:460V) + FREQ:60HZ , CAPPRM:MHLW + COOL:AIR + MOVOL:200V) + CAPPRE:IEC , ((MOVOL:230V , MOVOL:575V) + COOL:AIR , MOVOL:460V) + CAPPRE:ULCUL + CAPPRM:ASME + FREQ:60HZ) + IDRY:N + MODEL:GA75VP_16

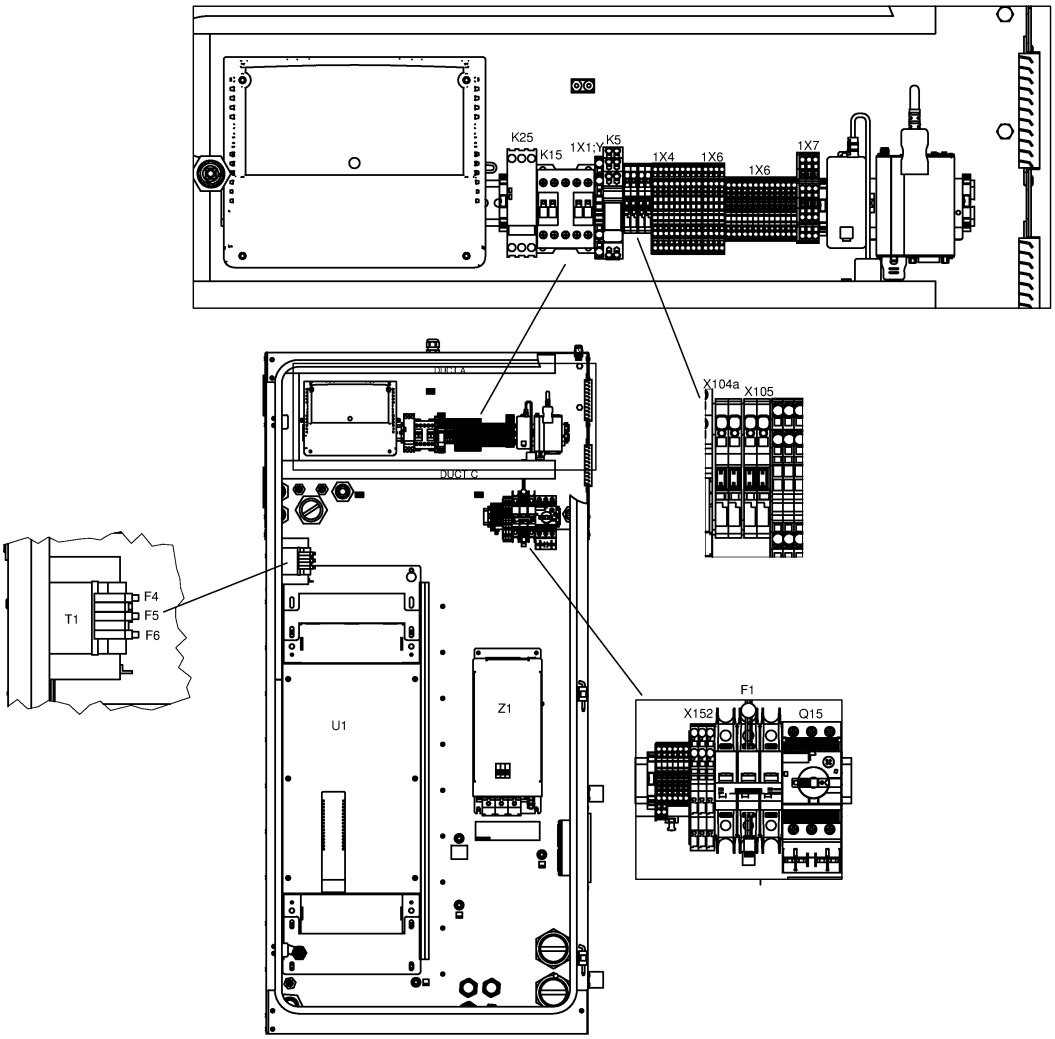

21.5 - Cubicle components GA 75L VSD+ - (200V-400V-500V/50Hz - IEC, 200V-380V-460V/60Hz - IEC, 230V-460V-575V/60Hz - UL-cUL) - Pack (20/07/2017 - 11/12/2018)

((((CAPPRM:AS1210 , CAPPRM:CE , CAPPRM:MHLW , CAPPRM:MOM) + MOVOL:400V , CAPPRM:CE + COOL:AIR + MOVOL:500V) + FREQ:50HZ , ((MOVOL:380V , MOVOL:460V) + CAPPRM:ASME , CAPPRM:MHLW + MOVOL:460V) + FREQ:60HZ , CAPPRM:MHLW + COOL:AIR + MOVOL:200V) + CAPPRE:IEC , ((MOVOL:230V , MOVOL:575V) + COOL:AIR , MOVOL:460V) + CAPPRE:ULCUL + CAPPRM:ASME + FREQ:60HZ) + IDRY:N + MODEL:GA75VP_16

Ref	Part Number	Qty	Name	Validity	EL
	1088 0039 36	4	TERMINAL	**(20/07/2017 - 20/08/2018)** ((((CAPPRM:AS1210 , CAPPRM:CE , CAPPRM:MHLW , CAPPRM:MOM) + MOVOL:400V , CAPPRM:CE + MOVOL:500V , CAPPRM:MHLW + MOVOL:200V) + FREQ:50HZ , ((MOVOL:200V , MOVOL:460V) + CAPPRM:MHLW , (MOVOL:380V , MOVOL:460V) + CAPPRM:ASME) + FREQ:60HZ) + CAPPRE:IEC , (MOVOL:230V , MOVOL:460V , MOVOL:575V) + CAPPRE:ULCUL + CAPPRM:ASME + FREQ:60HZ) + COOL:AIR **(21/08/2018 - 10/12/2018)** **(11/12/2018 - 11/12/2018)** ((((CAPPRM:AS1210 , CAPPRM:CE , CAPPRM:MHLW , CAPPRM:MOM) + MOVOL:400V , (CAPPRM:CE + MOVOL:500V , CAPPRM:MHLW + MOVOL:200V) + COOL:AIR) + FREQ:50HZ , ((CAPPRM:ASME , CAPPRM:MHLW) + COOL:WATER + MOVOL:460V , CAPPRM:ASME + MOVOL:380V , CAPPRM:MHLW + COOL:AIR + MOVOL:200V) + FREQ:60HZ) + CAPPRE:IEC , ((MOVOL:230V , MOVOL:575V) + COOL:AIR , MOVOL:460V) + CAPPRE:ULCUL + CAPPRM:ASME + FREQ:60HZ)	1X6
	1088 0039 37	1	END PLATE	**(20/07/2017 - 20/08/2018)** ((((CAPPRM:AS1210 , CAPPRM:CE , CAPPRM:MHLW , CAPPRM:MOM) + MOVOL:400V , CAPPRM:CE + MOVOL:500V , CAPPRM:MHLW + MOVOL:200V) + FREQ:50HZ , ((MOVOL:200V , MOVOL:460V) + CAPPRM:MHLW , (MOVOL:380V , MOVOL:460V) + CAPPRM:ASME) + FREQ:60HZ) + CAPPRE:IEC , (MOVOL:230V , MOVOL:460V , MOVOL:575V) + CAPPRE:ULCUL + CAPPRM:ASME + FREQ:60HZ) + COOL:AIR **(21/08/2018 - 10/12/2018)** **(11/12/2018 - 11/12/2018)** ((((CAPPRM:AS1210 , CAPPRM:CE , CAPPRM:MHLW , CAPPRM:MOM) + MOVOL:400V , (CAPPRM:CE + MOVOL:500V , CAPPRM:MHLW + MOVOL:200V) + COOL:AIR) + FREQ:50HZ , ((CAPPRM:ASME , CAPPRM:MHLW) + COOL:WATER + MOVOL:460V , CAPPRM:ASME + MOVOL:380V , CAPPRM:MHLW + COOL:AIR + MOVOL:200V) + FREQ:60HZ) + CAPPRE:IEC , ((MOVOL:230V , MOVOL:575V) + COOL:AIR , MOVOL:460V) + CAPPRE:ULCUL + CAPPRM:ASME + FREQ:60HZ)	1X4
	1088 0039 37	1	END PLATE	**(20/07/2017 - 20/08/2018)** ((((CAPPRM:AS1210 , CAPPRM:CE , CAPPRM:MHLW , CAPPRM:MOM) + MOVOL:400V , CAPPRM:CE + MOVOL:500V , CAPPRM:MHLW + MOVOL:200V) + FREQ:50HZ , ((MOVOL:200V , MOVOL:460V) + CAPPRM:MHLW , (MOVOL:380V , MOVOL:460V) + CAPPRM:ASME) + FREQ:60HZ) + CAPPRE:IEC , (MOVOL:230V , MOVOL:460V , MOVOL:575V) + CAPPRE:ULCUL + CAPPRM:ASME + FREQ:60HZ) + COOL:AIR **(21/08/2018 - 10/12/2018)** **(11/12/2018 - 11/12/2018)** ((((CAPPRM:AS1210 , CAPPRM:CE , CAPPRM:MHLW , CAPPRM:MOM) + MOVOL:400V , (CAPPRM:CE + MOVOL:500V , CAPPRM:MHLW + MOVOL:200V) + COOL:AIR) + FREQ:50HZ , ((CAPPRM:ASME , CAPPRM:MHLW) + COOL:WATER + MOVOL:460V , CAPPRM:ASME + MOVOL:380V , CAPPRM:MHLW + COOL:AIR + MOVOL:200V) + FREQ:60HZ) + CAPPRE:IEC , ((MOVOL:230V , MOVOL:575V) + COOL:AIR , MOVOL:460V) + CAPPRE:ULCUL + CAPPRM:ASME + FREQ:60HZ)	1X6

Legend:

CAPPRE:IEC - Component approval electrical:IEC
CAPPRE:ULCUL - Component approval electrical:UL/cUL
CAPPRM:AS1210 - Component approval mechanical:AS1210
CAPPRM:ASME - Component approval mechanical:ASME
CAPPRM:CE - Component approval mechanical:CE
CAPPRM:MHLW - Component approval mechanical:MHLW
CAPPRM:MOM - Component approval mechanical:MOM
COOL:AIR - Cooling:Air cooled
COOL:WATER - Cooling:Water cooled
FREQ:50HZ - Frequency:50 Hz
FREQ:60HZ - Frequency:60 Hz
IDRY:N - Integrated dryer:No
MODEL:GA75VP_16 - Model:GA 75VSD+
MOVOL:200V - Supply voltage:200 V
MOVOL:230V - Supply voltage:230 V
MOVOL:380V - Supply voltage:380 V
MOVOL:400V - Supply voltage:400 V
MOVOL:460V - Supply voltage:460 V
MOVOL:500V - Supply voltage:500 V
MOVOL:575V - Supply voltage:575 V

21.5 - Cubicle components GA 75L VSD+ - (200V-400V-500V/50Hz - IEC, 200V-380V-460V/60Hz - IEC, 230V-460V-575V/60Hz - UL-cUL) - Pack (20/07/2017 - 11/12/2018)

((((CAPPRM:AS1210 , CAPPRM:CE , CAPPRM:MHLW , CAPPRM:MOM) + MOVOL:400V , CAPPRM:CE + COOL:AIR + MOVOL:500V) + FREQ:50HZ , ((MOVOL:380V , MOVOL:460V) + CAPPRM:ASME , CAPPRM:MHLW + MOVOL:460V) + FREQ:60HZ , CAPPRM:MHLW + COOL:AIR + MOVOL:200V) + CAPPRE:IEC , ((MOVOL:230V , MOVOL:575V) + COOL:AIR , MOVOL:460V) + CAPPRE:ULCUL + CAPPRM:ASME + FREQ:60HZ) + IDRY:N + MODEL:GA75VP_16

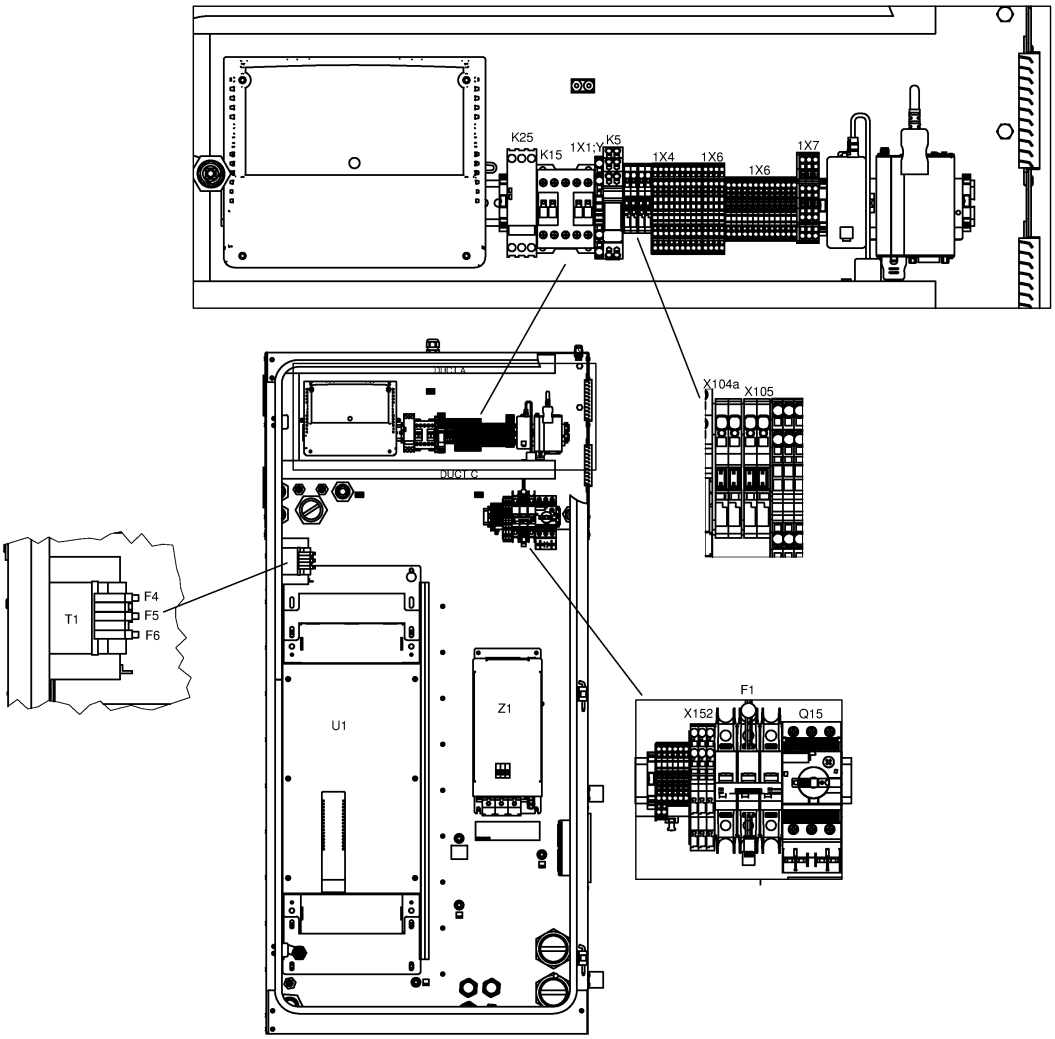

Ref	Part Number	Qty	Name	Validity	EL
	1088 0039 37	1	END PLATE	**(20/07/2017 - 20/08/2018)** ((((CAPPRM:AS1210 , CAPPRM:CE , CAPPRM:MHLW , CAPPRM:MOM) + MOVOL:400V , CAPPRM:CE + MOVOL:500V , CAPPRM:MHLW + MOVOL:200V) + FREQ:50HZ , ((MOVOL:200V , MOVOL:460V) + CAPPRM:MHLW , (MOVOL:380V , MOVOL:460V) + CAPPRM:ASME) + FREQ:60HZ) + CAPPRE:IEC , (MOVOL:230V , MOVOL:460V , MOVOL:575V) + CAPPRE:ULCUL + CAPPRM:ASME + FREQ:60HZ) + COOL:AIR **(21/08/2018 - 10/12/2018)** **(11/12/2018 - 11/12/2018)** ((((CAPPRM:AS1210 , CAPPRM:CE , CAPPRM:MHLW , CAPPRM:MOM) + MOVOL:400V , (CAPPRM:CE + MOVOL:500V , CAPPRM:MHLW + MOVOL:200V) + COOL:AIR) + FREQ:50HZ , ((CAPPRM:ASME , CAPPRM:MHLW) + COOL:WATER + MOVOL:460V , CAPPRM:ASME + MOVOL:380V , CAPPRM:MHLW + COOL:AIR + MOVOL:200V) + FREQ:60HZ) + CAPPRE:IEC , ((MOVOL:230V , MOVOL:575V) + COOL:AIR , MOVOL:460V) + CAPPRE:ULCUL + CAPPRM:ASME + FREQ:60HZ)	1X1:Y/D
	1088 0037 81	1	CONNECTOR	**(20/07/2017 - 20/08/2018)** ((((CAPPRM:AS1210 , CAPPRM:CE , CAPPRM:MHLW , CAPPRM:MOM) + MOVOL:400V , CAPPRM:CE + MOVOL:500V , CAPPRM:MHLW + MOVOL:200V) + FREQ:50HZ , ((MOVOL:200V , MOVOL:460V) + CAPPRM:MHLW , (MOVOL:380V , MOVOL:460V) + CAPPRM:ASME) + FREQ:60HZ) + CAPPRE:IEC , (MOVOL:230V , MOVOL:460V , MOVOL:575V) + CAPPRE:ULCUL + CAPPRM:ASME + FREQ:60HZ) + COOL:AIR **(21/08/2018 - 10/12/2018)** **(11/12/2018 - 11/12/2018)** ((((CAPPRM:AS1210 , CAPPRM:CE , CAPPRM:MHLW , CAPPRM:MOM) + MOVOL:400V , (CAPPRM:CE + MOVOL:500V , CAPPRM:MHLW + MOVOL:200V) + COOL:AIR) + FREQ:50HZ , ((CAPPRM:ASME , CAPPRM:MHLW) + COOL:WATER + MOVOL:460V , CAPPRM:ASME + MOVOL:380V , CAPPRM:MHLW + COOL:AIR + MOVOL:200V) + FREQ:60HZ) + CAPPRE:IEC , ((MOVOL:230V , MOVOL:575V) + COOL:AIR , MOVOL:460V) + CAPPRE:ULCUL + CAPPRM:ASME + FREQ:60HZ)	2X27
	1088 0037 80	1	CONNECTOR	**(20/07/2017 - 20/08/2018)** ((((CAPPRM:AS1210 , CAPPRM:CE , CAPPRM:MHLW , CAPPRM:MOM) + MOVOL:400V , CAPPRM:CE + MOVOL:500V , CAPPRM:MHLW + MOVOL:200V) + FREQ:50HZ , ((MOVOL:200V , MOVOL:460V) + CAPPRM:MHLW , (MOVOL:380V , MOVOL:460V) + CAPPRM:ASME) + FREQ:60HZ) + CAPPRE:IEC , (MOVOL:230V , MOVOL:460V , MOVOL:575V) + CAPPRE:ULCUL + CAPPRM:ASME + FREQ:60HZ) + COOL:AIR **(21/08/2018 - 10/12/2018)** **(11/12/2018 - 11/12/2018)** ((((CAPPRM:AS1210 , CAPPRM:CE , CAPPRM:MHLW , CAPPRM:MOM) + MOVOL:400V , (CAPPRM:CE + MOVOL:500V , CAPPRM:MHLW + MOVOL:200V) + COOL:AIR) + FREQ:50HZ , ((CAPPRM:ASME , CAPPRM:MHLW) + COOL:WATER + MOVOL:460V , CAPPRM:ASME + MOVOL:380V , CAPPRM:MHLW + COOL:AIR + MOVOL:200V) + FREQ:60HZ) + CAPPRE:IEC , ((MOVOL:230V , MOVOL:575V) + COOL:AIR , MOVOL:460V) + CAPPRE:ULCUL + CAPPRM:ASME + FREQ:60HZ)	2X28

Legend:

CAPPRE:IEC - Component approval electrical:IEC
CAPPRE:ULCUL - Component approval electrical:UL/cUL
CAPPRM:AS1210 - Component approval mechanical:AS1210
CAPPRM:ASME - Component approval mechanical:ASME
CAPPRM:CE - Component approval mechanical:CE
CAPPRM:MHLW - Component approval mechanical:MHLW
CAPPRM:MOM - Component approval mechanical:MOM
COOL:AIR - Cooling:Air cooled
COOL:WATER - Cooling:Water cooled
FREQ:50HZ - Frequency:50 Hz
FREQ:60HZ - Frequency:60 Hz
IDRY:N - Integrated dryer:No
MODEL:GA75VP_16 - Model:GA 75VSD+
MOVOL:200V - Supply voltage:200 V
MOVOL:230V - Supply voltage:230 V
MOVOL:380V - Supply voltage:380 V
MOVOL:400V - Supply voltage:400 V
MOVOL:460V - Supply voltage:460 V
MOVOL:500V - Supply voltage:500 V
MOVOL:575V - Supply voltage:575 V

21.5 - Cubicle components GA 75L VSD+ - (200V-400V-500V/50Hz - IEC, 200V-380V-460V/60Hz - IEC, 230V-460V-575V/60Hz - UL-cUL) - Pack (20/07/2017 - 11/12/2018)

((((CAPPRM:AS1210 , CAPPRM:CE , CAPPRM:MHLW , CAPPRM:MOM) + MOVOL:400V , CAPPRM:CE + COOL:AIR + MOVOL:500V) + FREQ:50HZ , ((MOVOL:380V , MOVOL:460V) + CAPPRM:ASME , CAPPRM:MHLW + MOVOL:460V) + FREQ:60HZ , CAPPRM:MHLW + COOL:AIR + MOVOL:200V) + CAPPRE:IEC , ((MOVOL:230V , MOVOL:575V) + COOL:AIR , MOVOL:460V) + CAPPRE:ULCUL + CAPPRM:ASME + FREQ:60HZ) + IDRY:N + MODEL:GA75VP_16

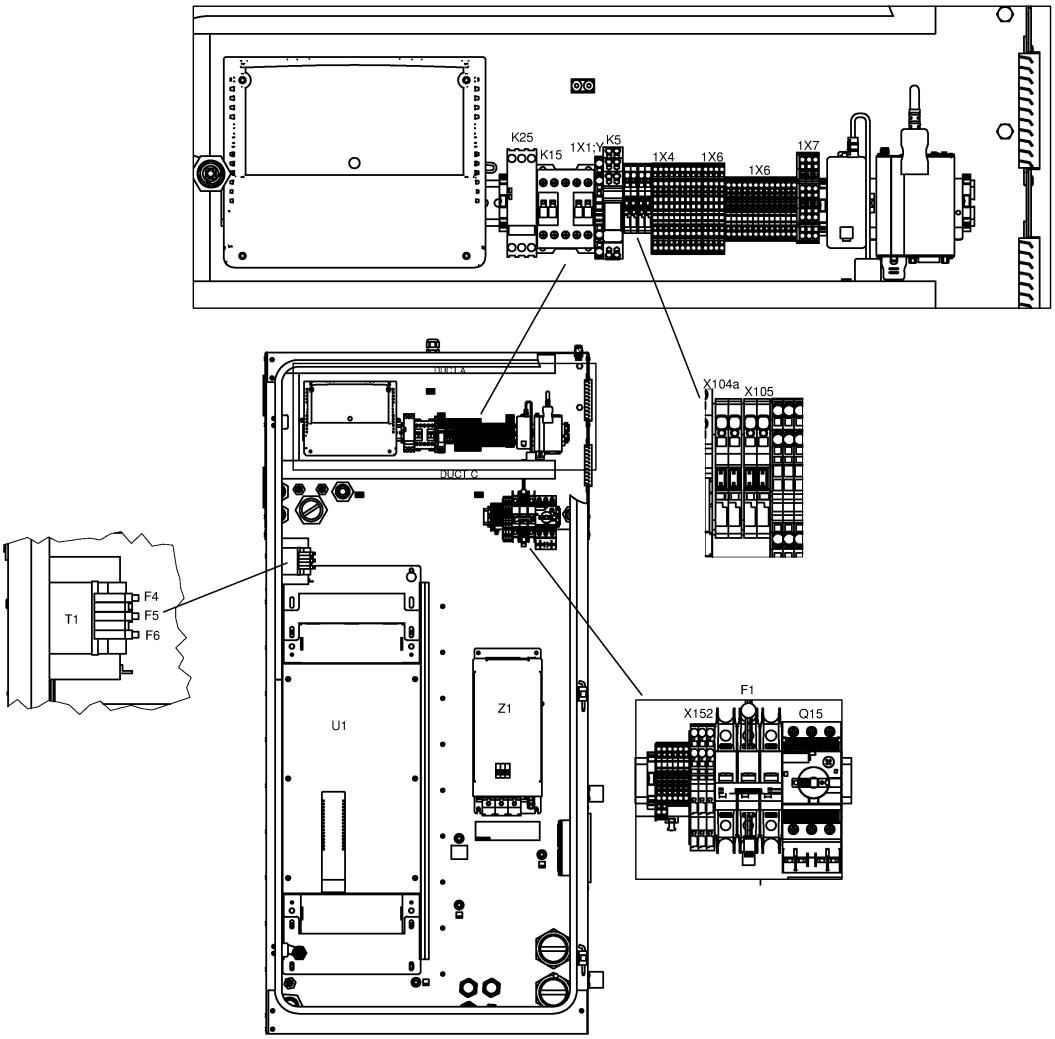

21.5 - Cubicle components GA 75L VSD+ - (200V-400V-500V/50Hz - IEC, 200V-380V-460V/60Hz - IEC, 230V-460V-575V/60Hz - UL-cUL) - Pack (20/07/2017 - 11/12/2018)

((((CAPPRM:AS1210 , CAPPRM:CE , CAPPRM:MHLW , CAPPRM:MOM) + MOVOL:400V , CAPPRM:CE + COOL:AIR + MOVOL:500V) + FREQ:50HZ , ((MOVOL:380V , MOVOL:460V) + CAPPRM:ASME , CAPPRM:MHLW + MOVOL:460V) + FREQ:60HZ , CAPPRM:MHLW + COOL:AIR + MOVOL:200V) + CAPPRE:IEC , ((MOVOL:230V , MOVOL:575V) + COOL:AIR , MOVOL:460V) + CAPPRE:ULCUL + CAPPRM:ASME + FREQ:60HZ) + IDRY:N + MODEL:GA75VP_16

Ref	Part Number	Qty	Name	Validity	EL
	1088 0031 32	1	CONNECTOR	**(20/07/2017 - 20/08/2018)** ((((CAPPRM:AS1210 , CAPPRM:CE , CAPPRM:MHLW , CAPPRM:MOM) + MOVOL:400V , CAPPRM:CE + MOVOL:500V , CAPPRM:MHLW + MOVOL:200V) + FREQ:50HZ , ((MOVOL:200V , MOVOL:460V) + CAPPRM:MHLW , (MOVOL:380V , MOVOL:460V) + CAPPRM:ASME) + FREQ:60HZ) + CAPPRE:IEC , (MOVOL:230V , MOVOL:460V , MOVOL:575V) + CAPPRE:ULCUL + CAPPRM:ASME + FREQ:60HZ) + COOL:AIR **(21/08/2018 - 10/12/2018)** **(11/12/2018 - 11/12/2018)** ((((CAPPRM:AS1210 , CAPPRM:CE , CAPPRM:MHLW , CAPPRM:MOM) + MOVOL:400V , (CAPPRM:CE + MOVOL:500V , CAPPRM:MHLW + MOVOL:200V) + COOL:AIR) + FREQ:50HZ , ((CAPPRM:ASME , CAPPRM:MHLW) + COOL:WATER + MOVOL:460V , CAPPRM:ASME + MOVOL:380V , CAPPRM:MHLW + COOL:AIR + MOVOL:200V) + FREQ:60HZ) + CAPPRE:IEC , ((MOVOL:230V , MOVOL:575V) + COOL:AIR , MOVOL:460V) + CAPPRE:ULCUL + CAPPRM:ASME + FREQ:60HZ)	2X30
	1088 0031 26	1	CONNECTOR 6-POLE	**(20/07/2017 - 20/08/2018)** ((((CAPPRM:AS1210 , CAPPRM:CE , CAPPRM:MHLW , CAPPRM:MOM) + MOVOL:400V , CAPPRM:CE + MOVOL:500V , CAPPRM:MHLW + MOVOL:200V) + FREQ:50HZ , ((MOVOL:200V , MOVOL:460V) + CAPPRM:MHLW , (MOVOL:380V , MOVOL:460V) + CAPPRM:ASME) + FREQ:60HZ) + CAPPRE:IEC , (MOVOL:230V , MOVOL:460V , MOVOL:575V) + CAPPRE:ULCUL + CAPPRM:ASME + FREQ:60HZ) + COOL:AIR **(21/08/2018 - 10/12/2018)** **(11/12/2018 - 11/12/2018)** ((((CAPPRM:AS1210 , CAPPRM:CE , CAPPRM:MHLW , CAPPRM:MOM) + MOVOL:400V , (CAPPRM:CE + MOVOL:500V , CAPPRM:MHLW + MOVOL:200V) + COOL:AIR) + FREQ:50HZ , ((CAPPRM:ASME , CAPPRM:MHLW) + COOL:WATER + MOVOL:460V , CAPPRM:ASME + MOVOL:380V , CAPPRM:MHLW + COOL:AIR + MOVOL:200V) + FREQ:60HZ) + CAPPRE:IEC , ((MOVOL:230V , MOVOL:575V) + COOL:AIR , MOVOL:460V) + CAPPRE:ULCUL + CAPPRM:ASME + FREQ:60HZ)	2X31
	~~1089 9664 06~~	1	SWITCH	**(20/07/2017 - 20/08/2018)** ((((CAPPRM:AS1210 , CAPPRM:CE , CAPPRM:MHLW , CAPPRM:MOM) + MOVOL:400V , CAPPRM:CE + MOVOL:500V , CAPPRM:MHLW + MOVOL:200V) + FREQ:50HZ , ((MOVOL:200V , MOVOL:460V) + CAPPRM:MHLW , (MOVOL:380V , MOVOL:460V) + CAPPRM:ASME) + FREQ:60HZ) + CAPPRE:IEC , (MOVOL:230V , MOVOL:460V , MOVOL:575V) + CAPPRE:ULCUL + CAPPRM:ASME + FREQ:60HZ) + COOL:AIR **(21/08/2018 - 10/12/2018)** **(11/12/2018 - 11/12/2018)** ((((CAPPRM:AS1210 , CAPPRM:CE , CAPPRM:MHLW , CAPPRM:MOM) + MOVOL:400V , (CAPPRM:CE + MOVOL:500V , CAPPRM:MHLW + MOVOL:200V) + COOL:AIR) + FREQ:50HZ , ((CAPPRM:ASME , CAPPRM:MHLW) + COOL:WATER + MOVOL:460V , CAPPRM:ASME + MOVOL:380V , CAPPRM:MHLW + COOL:AIR + MOVOL:200V) + FREQ:60HZ) + CAPPRE:IEC , ((MOVOL:230V , MOVOL:575V) + COOL:AIR , MOVOL:460V) + CAPPRE:ULCUL + CAPPRM:ASME + FREQ:60HZ)	Q15

Legend:

CAPPRE:IEC - Component approval electrical:IEC
CAPPRE:ULCUL - Component approval electrical:UL/cUL
CAPPRM:AS1210 - Component approval mechanical:AS1210
CAPPRM:ASME - Component approval mechanical:ASME
CAPPRM:CE - Component approval mechanical:CE
CAPPRM:MHLW - Component approval mechanical:MHLW
CAPPRM:MOM - Component approval mechanical:MOM
COOL:AIR - Cooling:Air cooled
COOL:WATER - Cooling:Water cooled
FREQ:50HZ - Frequency:50 Hz
FREQ:60HZ - Frequency:60 Hz
IDRY:N - Integrated dryer:No
MODEL:GA75VP_16 - Model:GA 75VSD+
MOVOL:200V - Supply voltage:200 V
MOVOL:230V - Supply voltage:230 V
MOVOL:380V - Supply voltage:380 V
MOVOL:400V - Supply voltage:400 V
MOVOL:460V - Supply voltage:460 V
MOVOL:500V - Supply voltage:500 V
MOVOL:575V - Supply voltage:575 V

21.5 - Cubicle components GA 75L VSD+ - (200V-400V-500V/50Hz - IEC, 200V-380V-460V/60Hz - IEC, 230V-460V-575V/60Hz - UL-cUL) - Pack (20/07/2017 - 11/12/2018)

((((CAPPRM:AS1210 , CAPPRM:CE , CAPPRM:MHLW , CAPPRM:MOM) + MOVOL:400V , CAPPRM:CE + COOL:AIR + MOVOL:500V) + FREQ:50HZ , ((MOVOL:380V , MOVOL:460V) + CAPPRM:ASME , CAPPRM:MHLW + MOVOL:460V) + FREQ:60HZ , CAPPRM:MHLW + COOL:AIR + MOVOL:200V) + CAPPRE:IEC , ((MOVOL:230V , MOVOL:575V) + COOL:AIR , MOVOL:460V) + CAPPRE:ULCUL + CAPPRM:ASME + FREQ:60HZ) + IDRY:N + MODEL:GA75VP_16

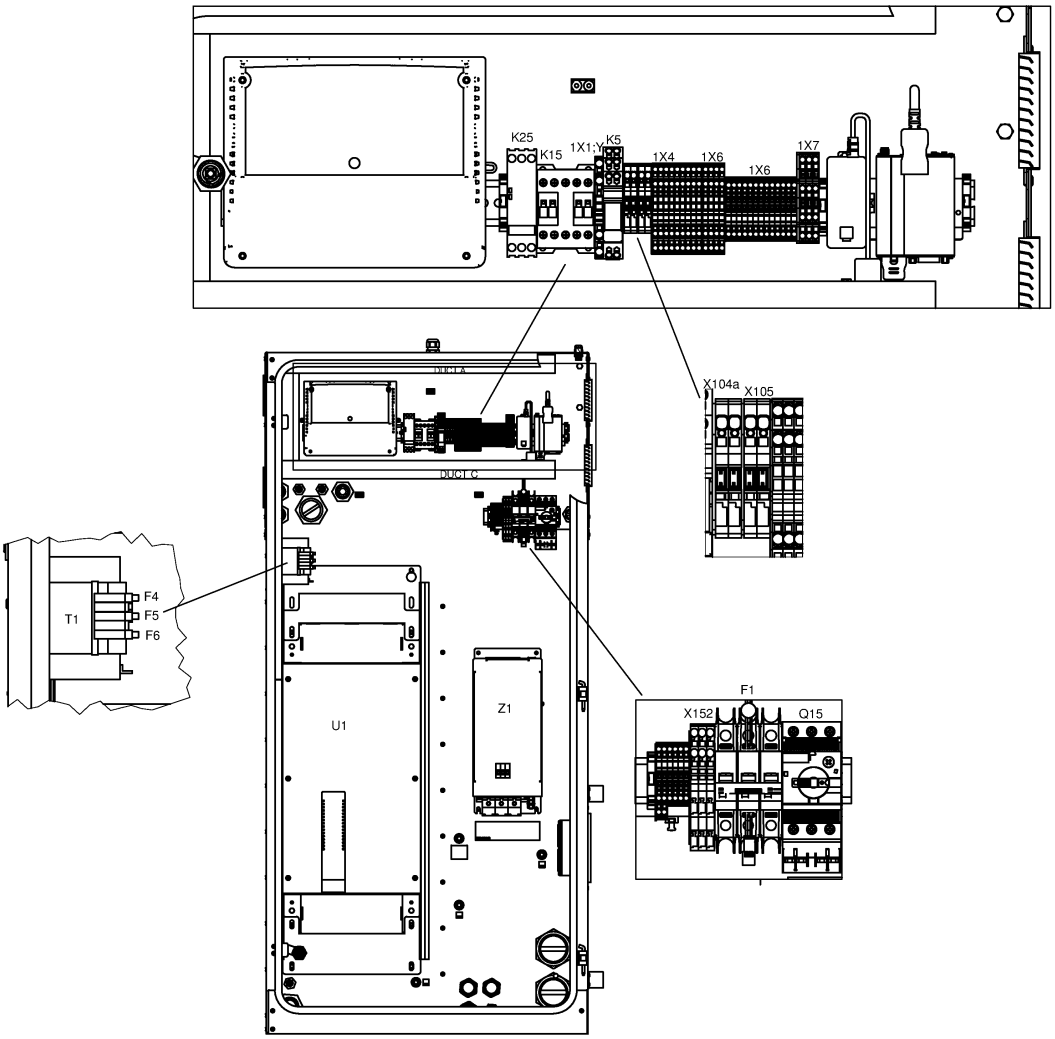

21.5 - Cubicle components GA 75L VSD+ - (200V-400V-500V/50Hz - IEC, 200V-380V-460V/60Hz - IEC, 230V-460V-575V/60Hz - UL-cUL) - Pack (20/07/2017 - 11/12/2018)

((((CAPPRM:AS1210 , CAPPRM:CE , CAPPRM:MHLW , CAPPRM:MOM) + MOVOL:400V , CAPPRM:CE + COOL:AIR + MOVOL:500V) + FREQ:50HZ , ((MOVOL:380V , MOVOL:460V) + CAPPRM:ASME , CAPPRM:MHLW + MOVOL:460V) + FREQ:60HZ , CAPPRM:MHLW + COOL:AIR + MOVOL:200V) + CAPPRE:IEC , ((MOVOL:230V , MOVOL:575V) + COOL:AIR , MOVOL:460V) + CAPPRE:ULCUL + CAPPRM:ASME + FREQ:60HZ) + IDRY:N + MODEL:GA75VP_16

Ref	Part Number	Qty	Name	Validity	EL
	Substituted by:	1089 9551 97 - AUX.CONTACT CIRCUIT BREAKER (quantity: 1)			
	1089 9551 18	1	CIRCUIT BREAKER	**(20/07/2017 - 20/08/2018)** ((((CAPPRM:AS1210 , CAPPRM:CE , CAPPRM:MHLW , CAPPRM:MOM) + MOVOL:400V , CAPPRM:CE + MOVOL:500V , CAPPRM:MHLW + MOVOL:200V) + FREQ:50HZ , ((MOVOL:200V , MOVOL:460V) + CAPPRM:MHLW , (MOVOL:380V , MOVOL:460V) + CAPPRM:ASME) + FREQ:60HZ) + CAPPRE:IEC , (MOVOL:230V , MOVOL:460V , MOVOL:575V) + CAPPRE:ULCUL + CAPPRM:ASME + FREQ:60HZ) + COOL:AIR **(21/08/2018 - 10/12/2018)** **(11/12/2018 - 11/12/2018)** ((((CAPPRM:AS1210 , CAPPRM:CE , CAPPRM:MHLW , CAPPRM:MOM) + MOVOL:400V , (CAPPRM:CE + MOVOL:500V , CAPPRM:MHLW + MOVOL:200V) + COOL:AIR) + FREQ:50HZ , ((CAPPRM:ASME , CAPPRM:MHLW) + COOL:WATER + MOVOL:460V , CAPPRM:ASME + MOVOL:380V , CAPPRM:MHLW + COOL:AIR + MOVOL:200V) + FREQ:60HZ) + CAPPRE:IEC , ((MOVOL:230V , MOVOL:575V) + COOL:AIR , MOVOL:460V) + CAPPRE:ULCUL + CAPPRM:ASME + FREQ:60HZ)	Q15
	1088 0038 26	1	TERMINAL	**(20/07/2017 - 20/08/2018)** ((((CAPPRM:AS1210 , CAPPRM:CE , CAPPRM:MHLW , CAPPRM:MOM) + MOVOL:400V , CAPPRM:CE + MOVOL:500V , CAPPRM:MHLW + MOVOL:200V) + FREQ:50HZ , ((MOVOL:200V , MOVOL:460V) + CAPPRM:MHLW , (MOVOL:380V , MOVOL:460V) + CAPPRM:ASME) + FREQ:60HZ) + CAPPRE:IEC , (MOVOL:230V , MOVOL:460V , MOVOL:575V) + CAPPRE:ULCUL + CAPPRM:ASME + FREQ:60HZ) + COOL:AIR **(21/08/2018 - 10/12/2018)** **(11/12/2018 - 11/12/2018)** ((((CAPPRM:AS1210 , CAPPRM:CE , CAPPRM:MHLW , CAPPRM:MOM) + MOVOL:400V , (CAPPRM:CE + MOVOL:500V , CAPPRM:MHLW + MOVOL:200V) + COOL:AIR) + FREQ:50HZ , ((CAPPRM:ASME , CAPPRM:MHLW) + COOL:WATER + MOVOL:460V , CAPPRM:ASME + MOVOL:380V , CAPPRM:MHLW + COOL:AIR + MOVOL:200V) + FREQ:60HZ) + CAPPRE:IEC , ((MOVOL:230V , MOVOL:575V) + COOL:AIR , MOVOL:460V) + CAPPRE:ULCUL + CAPPRM:ASME + FREQ:60HZ)	1X1:Y/D

Legend:

CAPPRE:IEC - Component approval electrical:IEC
CAPPRE:ULCUL - Component approval electrical:UL/cUL
CAPPRM:AS1210 - Component approval mechanical:AS1210
CAPPRM:ASME - Component approval mechanical:ASME
CAPPRM:CE - Component approval mechanical:CE
CAPPRM:MHLW - Component approval mechanical:MHLW
CAPPRM:MOM - Component approval mechanical:MOM
COOL:AIR - Cooling:Air cooled
COOL:WATER - Cooling:Water cooled
FREQ:50HZ - Frequency:50 Hz
FREQ:60HZ - Frequency:60 Hz
IDRY:N - Integrated dryer:No
MODEL:GA75VP_16 - Model:GA 75VSD+
MOVOL:200V - Supply voltage:200 V
MOVOL:230V - Supply voltage:230 V
MOVOL:380V - Supply voltage:380 V
MOVOL:400V - Supply voltage:400 V
MOVOL:460V - Supply voltage:460 V
MOVOL:500V - Supply voltage:500 V
MOVOL:575V - Supply voltage:575 V

21.5 - Cubicle components GA 75L VSD+ - (200V-400V-500V/50Hz - IEC, 200V-380V-460V/60Hz - IEC, 230V-460V-575V/60Hz - UL-cUL) - Pack (20/07/2017 - 11/12/2018)

((((CAPPRM:AS1210 , CAPPRM:CE , CAPPRM:MHLW , CAPPRM:MOM) + MOVOL:400V , CAPPRM:CE + COOL:AIR + MOVOL:500V) + FREQ:50HZ , ((MOVOL:380V , MOVOL:460V) + CAPPRM:ASME , CAPPRM:MHLW + MOVOL:460V) + FREQ:60HZ , CAPPRM:MHLW + COOL:AIR + MOVOL:200V) + CAPPRE:IEC , ((MOVOL:230V , MOVOL:575V) + COOL:AIR , MOVOL:460V) + CAPPRE:ULCUL + CAPPRM:ASME + FREQ:60HZ) + IDRY:N + MODEL:GA75VP_16

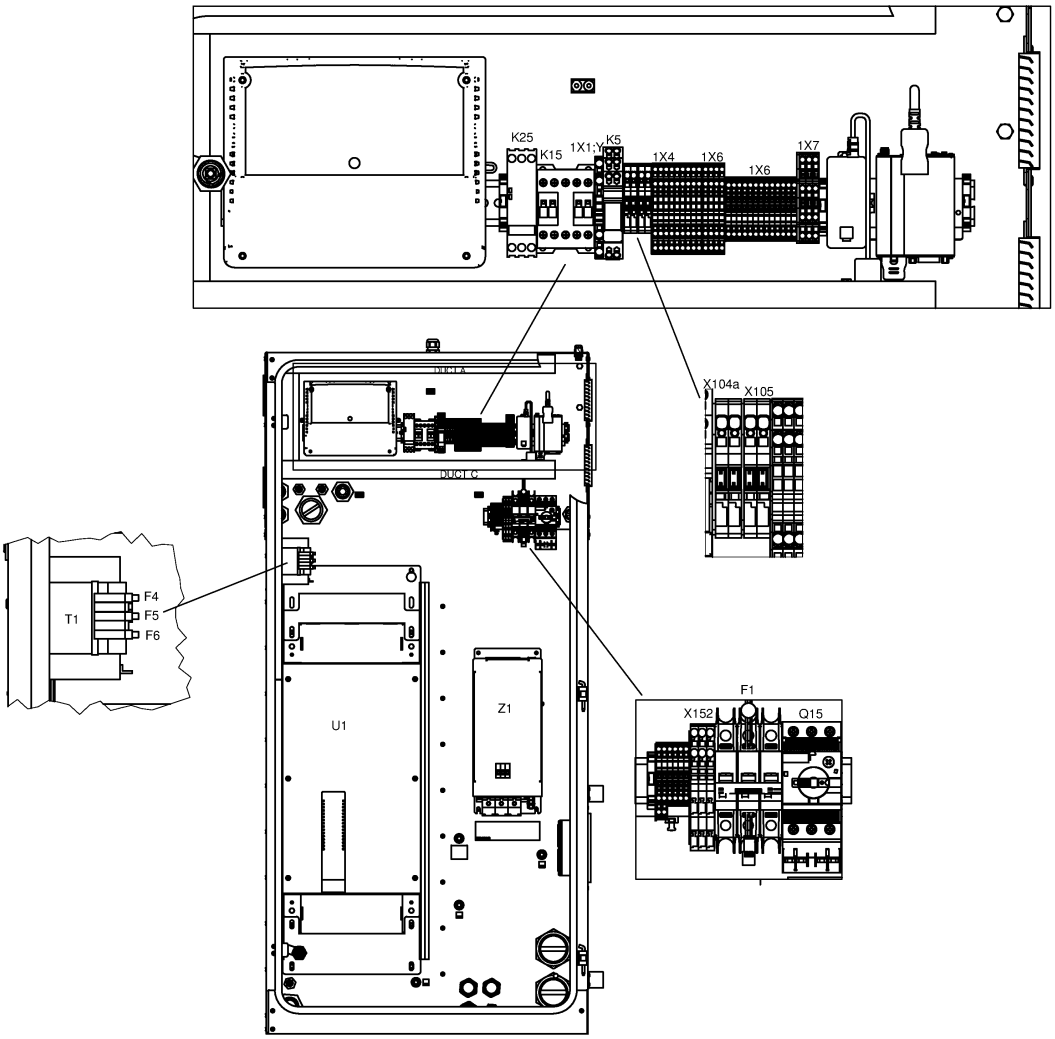

Ref	Part Number	Qty	Name	Validity	EL
	1089 9602 79	1	CONTACTOR 110 V	**(20/07/2017 - 20/08/2018)** ((((CAPPRM:AS1210 , CAPPRM:CE , CAPPRM:MHLW , CAPPRM:MOM) + MOVOL:400V , CAPPRM:CE + MOVOL:500V , CAPPRM:MHLW + MOVOL:200V) + FREQ:50HZ , ((MOVOL:200V , MOVOL:460V) + CAPPRM:MHLW , (MOVOL:380V , MOVOL:460V) + CAPPRM:ASME) + FREQ:60HZ) + CAPPRE:IEC , (MOVOL:230V , MOVOL:460V , MOVOL:575V) + CAPPRE:ULCUL + CAPPRM:ASME + FREQ:60HZ) + COOL:AIR **(21/08/2018 - 10/12/2018)** **(11/12/2018 - 11/12/2018)** ((((CAPPRM:AS1210 , CAPPRM:CE , CAPPRM:MHLW , CAPPRM:MOM) + MOVOL:400V , (CAPPRM:CE + MOVOL:500V , CAPPRM:MHLW + MOVOL:200V) + COOL:AIR) + FREQ:50HZ , ((CAPPRM:ASME , CAPPRM:MHLW) + COOL:WATER + MOVOL:460V , CAPPRM:ASME + MOVOL:380V , CAPPRM:MHLW + COOL:AIR + MOVOL:200V) + FREQ:60HZ) + CAPPRE:IEC , ((MOVOL:230V , MOVOL:575V) + COOL:AIR , MOVOL:460V) + CAPPRE:ULCUL + CAPPRM:ASME + FREQ:60HZ)	K15
	1089 9461 26	1	PHASE SEQUENCE RELAY	**(20/07/2017 - 20/08/2018)** ((((CAPPRM:AS1210 , CAPPRM:CE , CAPPRM:MHLW , CAPPRM:MOM) + MOVOL:400V , CAPPRM:CE + MOVOL:500V , CAPPRM:MHLW + MOVOL:200V) + FREQ:50HZ , ((MOVOL:200V , MOVOL:460V) + CAPPRM:MHLW , (MOVOL:380V , MOVOL:460V) + CAPPRM:ASME) + FREQ:60HZ) + CAPPRE:IEC , (MOVOL:230V , MOVOL:460V , MOVOL:575V) + CAPPRE:ULCUL + CAPPRM:ASME + FREQ:60HZ) + COOL:AIR **(21/08/2018 - 10/12/2018)** **(11/12/2018 - 11/12/2018)** ((((CAPPRM:AS1210 , CAPPRM:CE , CAPPRM:MHLW , CAPPRM:MOM) + MOVOL:400V , (CAPPRM:CE + MOVOL:500V , CAPPRM:MHLW + MOVOL:200V) + COOL:AIR) + FREQ:50HZ , ((CAPPRM:ASME , CAPPRM:MHLW) + COOL:WATER + MOVOL:460V , CAPPRM:ASME + MOVOL:380V , CAPPRM:MHLW + COOL:AIR + MOVOL:200V) + FREQ:60HZ) + CAPPRE:IEC , ((MOVOL:230V , MOVOL:575V) + COOL:AIR , MOVOL:460V) + CAPPRE:ULCUL + CAPPRM:ASME + FREQ:60HZ)	K25
	1088 0032 17	1	RELAY 115 VAC	**(20/07/2017 - 20/08/2018)** ((((CAPPRM:AS1210 , CAPPRM:CE , CAPPRM:MHLW , CAPPRM:MOM) + MOVOL:400V , CAPPRM:CE + MOVOL:500V , CAPPRM:MHLW + MOVOL:200V) + FREQ:50HZ , ((MOVOL:200V , MOVOL:460V) + CAPPRM:MHLW , (MOVOL:380V , MOVOL:460V) + CAPPRM:ASME) + FREQ:60HZ) + CAPPRE:IEC , (MOVOL:230V , MOVOL:460V , MOVOL:575V) + CAPPRE:ULCUL + CAPPRM:ASME + FREQ:60HZ) + COOL:AIR **(21/08/2018 - 10/12/2018)** **(11/12/2018 - 11/12/2018)** ((((CAPPRM:AS1210 , CAPPRM:CE , CAPPRM:MHLW , CAPPRM:MOM) + MOVOL:400V , (CAPPRM:CE + MOVOL:500V , CAPPRM:MHLW + MOVOL:200V) + COOL:AIR) + FREQ:50HZ , ((CAPPRM:ASME , CAPPRM:MHLW) + COOL:WATER + MOVOL:460V , CAPPRM:ASME + MOVOL:380V , CAPPRM:MHLW + COOL:AIR + MOVOL:200V) + FREQ:60HZ) + CAPPRE:IEC , ((MOVOL:230V , MOVOL:575V) + COOL:AIR , MOVOL:460V) + CAPPRE:ULCUL + CAPPRM:ASME + FREQ:60HZ)	K5

Legend:

CAPPRE:IEC - Component approval electrical:IEC
CAPPRE:ULCUL - Component approval electrical:UL/cUL
CAPPRM:AS1210 - Component approval mechanical:AS1210
CAPPRM:ASME - Component approval mechanical:ASME
CAPPRM:CE - Component approval mechanical:CE
CAPPRM:MHLW - Component approval mechanical:MHLW
CAPPRM:MOM - Component approval mechanical:MOM
COOL:AIR - Cooling:Air cooled
COOL:WATER - Cooling:Water cooled
FREQ:50HZ - Frequency:50 Hz
FREQ:60HZ - Frequency:60 Hz
IDRY:N - Integrated dryer:No
MODEL:GA75VP_16 - Model:GA 75VSD+
MOVOL:200V - Supply voltage:200 V
MOVOL:230V - Supply voltage:230 V
MOVOL:380V - Supply voltage:380 V
MOVOL:400V - Supply voltage:400 V
MOVOL:460V - Supply voltage:460 V
MOVOL:500V - Supply voltage:500 V
MOVOL:575V - Supply voltage:575 V

21.5 - Cubicle components GA 75L VSD+ - (200V-400V-500V/50Hz - IEC, 200V-380V-460V/60Hz - IEC, 230V-460V-575V/60Hz - UL-cUL) - Pack (20/07/2017 - 11/12/2018)

((((CAPPRM:AS1210 , CAPPRM:CE , CAPPRM:MHLW , CAPPRM:MOM) + MOVOL:400V , CAPPRM:CE + COOL:AIR + MOVOL:500V) + FREQ:50HZ , ((MOVOL:380V , MOVOL:460V) + CAPPRM:ASME , CAPPRM:MHLW + MOVOL:460V) + FREQ:60HZ , CAPPRM:MHLW + COOL:AIR + MOVOL:200V) + CAPPRE:IEC , ((MOVOL:230V , MOVOL:575V) + COOL:AIR , MOVOL:460V) + CAPPRE:ULCUL + CAPPRM:ASME + FREQ:60HZ) + IDRY:N + MODEL:GA75VP_16

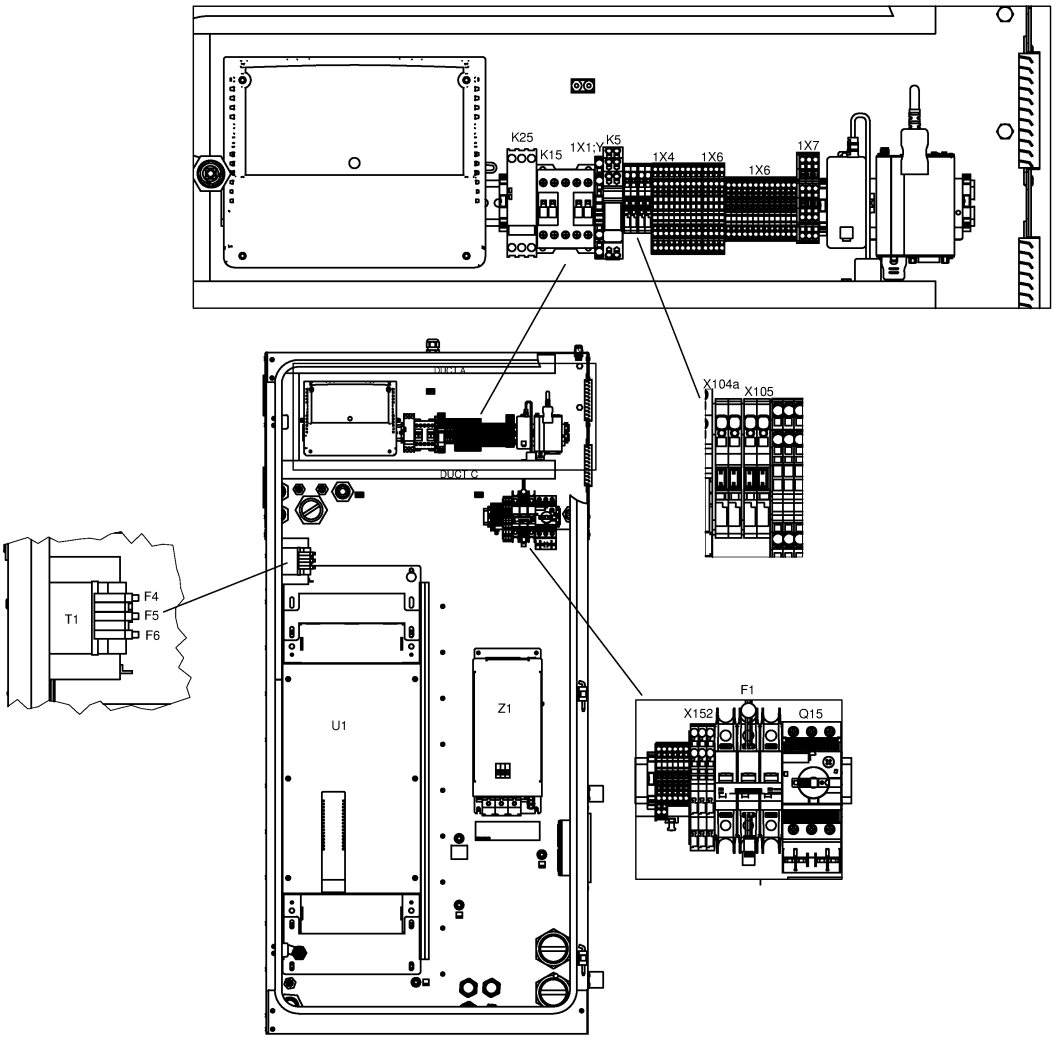

21.5 - Cubicle components GA 75L VSD+ - (200V-400V-500V/50Hz - IEC, 200V-380V-460V/60Hz - IEC, 230V-460V-575V/60Hz - UL-cUL) - Pack (20/07/2017 - 11/12/2018)

((((CAPPRM:AS1210 , CAPPRM:CE , CAPPRM:MHLW , CAPPRM:MOM) + MOVOL:400V , CAPPRM:CE + COOL:AIR + MOVOL:500V) + FREQ:50HZ , ((MOVOL:380V , MOVOL:460V) + CAPPRM:ASME , CAPPRM:MHLW + MOVOL:460V) + FREQ:60HZ , CAPPRM:MHLW + COOL:AIR + MOVOL:200V) + CAPPRE:IEC , ((MOVOL:230V , MOVOL:575V) + COOL:AIR , MOVOL:460V) + CAPPRE:ULCUL + CAPPRM:ASME + FREQ:60HZ) + IDRY:N + MODEL:GA75VP_16

Ref	Part Number	Qty	Name	Validity	EL
	0991 8011 21	AR	CABLE TRAY	**(20/07/2017 - 20/08/2018)** ((((CAPPRM:AS1210 , CAPPRM:CE , CAPPRM:MHLW , CAPPRM:MOM) + MOVOL:400V , CAPPRM:CE + MOVOL:500V , CAPPRM:MHLW + MOVOL:200V) + FREQ:50HZ , ((MOVOL:200V , MOVOL:460V) + CAPPRM:MHLW , (MOVOL:380V , MOVOL:460V) + CAPPRM:ASME) + FREQ:60HZ) + CAPPRE:IEC , (MOVOL:230V , MOVOL:460V , MOVOL:575V) + CAPPRE:ULCUL + CAPPRM:ASME + FREQ:60HZ) + COOL:AIR **(21/08/2018 - 10/12/2018)** **(11/12/2018 - 11/12/2018)** ((((CAPPRM:AS1210 , CAPPRM:CE , CAPPRM:MHLW , CAPPRM:MOM) + MOVOL:400V , (CAPPRM:CE + MOVOL:500V , CAPPRM:MHLW + MOVOL:200V) + COOL:AIR) + FREQ:50HZ , ((CAPPRM:ASME , CAPPRM:MHLW) + COOL:WATER + MOVOL:460V , CAPPRM:ASME + MOVOL:380V , CAPPRM:MHLW + COOL:AIR + MOVOL:200V) + FREQ:60HZ) + CAPPRE:IEC , ((MOVOL:230V , MOVOL:575V) + COOL:AIR , MOVOL:460V) + CAPPRE:ULCUL + CAPPRM:ASME + FREQ:60HZ)	L=1384mm
	0697 9811 16	1	PLUG M50	**(20/07/2017 - 20/08/2018)** ((((CAPPRM:AS1210 , CAPPRM:CE , CAPPRM:MHLW , CAPPRM:MOM) + MOVOL:400V , CAPPRM:CE + MOVOL:500V , CAPPRM:MHLW + MOVOL:200V) + FREQ:50HZ , ((MOVOL:200V , MOVOL:460V) + CAPPRM:MHLW , (MOVOL:380V , MOVOL:460V) + CAPPRM:ASME) + FREQ:60HZ) + CAPPRE:IEC , (MOVOL:230V , MOVOL:460V , MOVOL:575V) + CAPPRE:ULCUL + CAPPRM:ASME + FREQ:60HZ) + COOL:AIR **(21/08/2018 - 10/12/2018)** **(11/12/2018 - 11/12/2018)** ((((CAPPRM:AS1210 , CAPPRM:CE , CAPPRM:MHLW , CAPPRM:MOM) + MOVOL:400V , (CAPPRM:CE + MOVOL:500V , CAPPRM:MHLW + MOVOL:200V) + COOL:AIR) + FREQ:50HZ , ((CAPPRM:ASME , CAPPRM:MHLW) + COOL:WATER + MOVOL:460V , CAPPRM:ASME + MOVOL:380V , CAPPRM:MHLW + COOL:AIR + MOVOL:200V) + FREQ:60HZ) + CAPPRE:IEC , ((MOVOL:230V , MOVOL:575V) + COOL:AIR , MOVOL:460V) + CAPPRE:ULCUL + CAPPRM:ASME + FREQ:60HZ)	
	Electrical legend:	Plug for Dryer			

Legend:

CAPPRE:IEC - Component approval electrical:IEC
CAPPRE:ULCUL - Component approval electrical:UL/cUL
CAPPRM:AS1210 - Component approval mechanical:AS1210
CAPPRM:ASME - Component approval mechanical:ASME
CAPPRM:CE - Component approval mechanical:CE
CAPPRM:MHLW - Component approval mechanical:MHLW
CAPPRM:MOM - Component approval mechanical:MOM
COOL:AIR - Cooling:Air cooled
COOL:WATER - Cooling:Water cooled
FREQ:50HZ - Frequency:50 Hz
FREQ:60HZ - Frequency:60 Hz
IDRY:N - Integrated dryer:No
MODEL:GA75VP_16 - Model:GA 75VSD+
MOVOL:200V - Supply voltage:200 V
MOVOL:230V - Supply voltage:230 V
MOVOL:380V - Supply voltage:380 V
MOVOL:400V - Supply voltage:400 V
MOVOL:460V - Supply voltage:460 V
MOVOL:500V - Supply voltage:500 V
MOVOL:575V - Supply voltage:575 V

21.5 - Cubicle components GA 75L VSD+ - (200V-400V-500V/50Hz - IEC, 200V-380V-460V/60Hz - IEC, 230V-460V-575V/60Hz - UL-cUL) - Pack (20/07/2017 - 11/12/2018)

((((CAPPRM:AS1210 , CAPPRM:CE , CAPPRM:MHLW , CAPPRM:MOM) + MOVOL:400V , CAPPRM:CE + COOL:AIR + MOVOL:500V) + FREQ:50HZ , ((MOVOL:380V , MOVOL:460V) + CAPPRM:ASME , CAPPRM:MHLW + MOVOL:460V) + FREQ:60HZ , CAPPRM:MHLW + COOL:AIR + MOVOL:200V) + CAPPRE:IEC , ((MOVOL:230V , MOVOL:575V) + COOL:AIR , MOVOL:460V) + CAPPRE:ULCUL + CAPPRM:ASME + FREQ:60HZ) + IDRY:N + MODEL:GA75VP_16

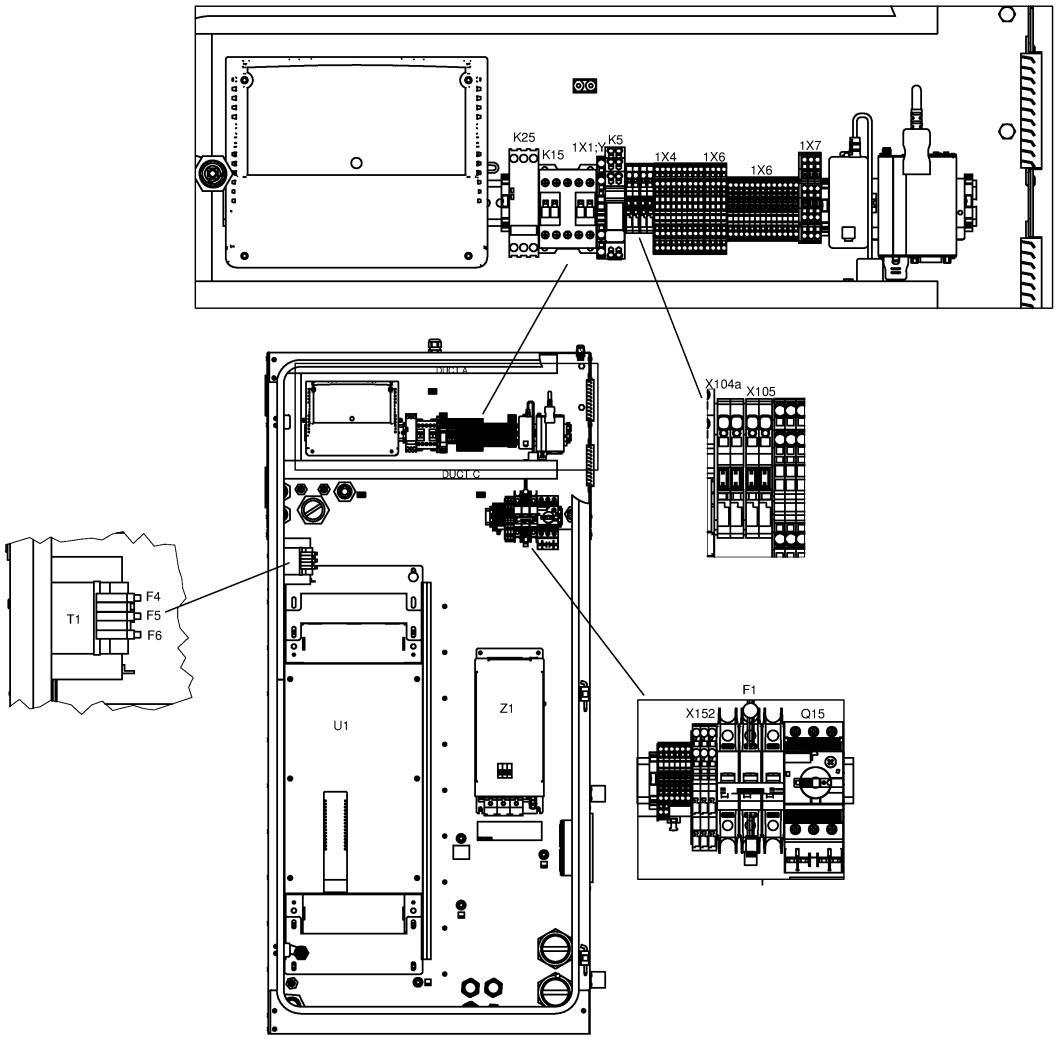

21.5 - Cubicle components GA 75L VSD+ - (200V-400V-500V/50Hz - IEC, 200V-380V-460V/60Hz - IEC, 230V-460V-575V/60Hz - UL-cUL) - Pack (20/07/2017 - 11/12/2018)

((((CAPPRM:AS1210 , CAPPRM:CE , CAPPRM:MHLW , CAPPRM:MOM) + MOVOL:400V , CAPPRM:CE + COOL:AIR + MOVOL:500V) + FREQ:50HZ , ((MOVOL:380V , MOVOL:460V) + CAPPRM:ASME , CAPPRM:MHLW + MOVOL:460V) + FREQ:60HZ , CAPPRM:MHLW + COOL:AIR + MOVOL:200V) + CAPPRE:IEC , ((MOVOL:230V , MOVOL:575V) + COOL:AIR , MOVOL:460V) + CAPPRE:ULCUL + CAPPRM:ASME + FREQ:60HZ) + IDRY:N + MODEL:GA75VP_16

Ref	Part Number	Qty	Name	Validity	EL
	0989 3700 47	1	LOCKNUT	**(20/07/2017 - 20/08/2018)** ((((CAPPRM:AS1210 , CAPPRM:CE , CAPPRM:MHLW , CAPPRM:MOM) + MOVOL:400V , CAPPRM:CE + MOVOL:500V , CAPPRM:MHLW + MOVOL:200V) + FREQ:50HZ , ((MOVOL:200V , MOVOL:460V) + CAPPRM:MHLW , (MOVOL:380V , MOVOL:460V) + CAPPRM:ASME) + FREQ:60HZ) + CAPPRE:IEC , (MOVOL:230V , MOVOL:460V , MOVOL:575V) + CAPPRE:ULCUL + CAPPRM:ASME + FREQ:60HZ) + COOL:AIR **(21/08/2018 - 10/12/2018)** **(11/12/2018 - 11/12/2018)** ((((CAPPRM:AS1210 , CAPPRM:CE , CAPPRM:MHLW , CAPPRM:MOM) + MOVOL:400V , (CAPPRM:CE + MOVOL:500V , CAPPRM:MHLW + MOVOL:200V) + COOL:AIR) + FREQ:50HZ , ((CAPPRM:ASME , CAPPRM:MHLW) + COOL:WATER + MOVOL:460V , CAPPRM:ASME + MOVOL:380V , CAPPRM:MHLW + COOL:AIR + MOVOL:200V) + FREQ:60HZ) + CAPPRE:IEC , ((MOVOL:230V , MOVOL:575V) + COOL:AIR , MOVOL:460V) + CAPPRE:ULCUL + CAPPRM:ASME + FREQ:60HZ)	
	Electrical legend:	Locknut for dryer			
	0697 9811 11	2	PLUG	**(20/07/2017 - 20/08/2018)** ((((CAPPRM:AS1210 , CAPPRM:CE , CAPPRM:MHLW , CAPPRM:MOM) + MOVOL:400V , CAPPRM:CE + MOVOL:500V , CAPPRM:MHLW + MOVOL:200V) + FREQ:50HZ , ((MOVOL:200V , MOVOL:460V) + CAPPRM:MHLW , (MOVOL:380V , MOVOL:460V) + CAPPRM:ASME) + FREQ:60HZ) + CAPPRE:IEC , (MOVOL:230V , MOVOL:460V , MOVOL:575V) + CAPPRE:ULCUL + CAPPRM:ASME + FREQ:60HZ) + COOL:AIR **(21/08/2018 - 10/12/2018)** **(11/12/2018 - 11/12/2018)** ((((CAPPRM:AS1210 , CAPPRM:CE , CAPPRM:MHLW , CAPPRM:MOM) + MOVOL:400V , (CAPPRM:CE + MOVOL:500V , CAPPRM:MHLW + MOVOL:200V) + COOL:AIR) + FREQ:50HZ , ((CAPPRM:ASME , CAPPRM:MHLW) + COOL:WATER + MOVOL:460V , CAPPRM:ASME + MOVOL:380V , CAPPRM:MHLW + COOL:AIR + MOVOL:200V) + FREQ:60HZ) + CAPPRE:IEC , ((MOVOL:230V , MOVOL:575V) + COOL:AIR , MOVOL:460V) + CAPPRE:ULCUL + CAPPRM:ASME + FREQ:60HZ)	
	Electrical legend:	Plug for FF Drain/LAT			

Legend:

CAPPRE:IEC - Component approval electrical:IEC
CAPPRE:ULCUL - Component approval electrical:UL/cUL
CAPPRM:AS1210 - Component approval mechanical:AS1210
CAPPRM:ASME - Component approval mechanical:ASME
CAPPRM:CE - Component approval mechanical:CE
CAPPRM:MHLW - Component approval mechanical:MHLW
CAPPRM:MOM - Component approval mechanical:MOM
COOL:AIR - Cooling:Air cooled
COOL:WATER - Cooling:Water cooled
FREQ:50HZ - Frequency:50 Hz
FREQ:60HZ - Frequency:60 Hz
IDRY:N - Integrated dryer:No
MODEL:GA75VP_16 - Model:GA 75VSD+
MOVOL:200V - Supply voltage:200 V
MOVOL:230V - Supply voltage:230 V
MOVOL:380V - Supply voltage:380 V
MOVOL:400V - Supply voltage:400 V
MOVOL:460V - Supply voltage:460 V
MOVOL:500V - Supply voltage:500 V
MOVOL:575V - Supply voltage:575 V

21.5 - Cubicle components GA 75L VSD+ - (200V-400V-500V/50Hz - IEC, 200V-380V-460V/60Hz - IEC, 230V-460V-575V/60Hz - UL-cUL) - Pack (20/07/2017 - 11/12/2018)

((((CAPPRM:AS1210 , CAPPRM:CE , CAPPRM:MHLW , CAPPRM:MOM) + MOVOL:400V , CAPPRM:CE + COOL:AIR + MOVOL:500V) + FREQ:50HZ , ((MOVOL:380V , MOVOL:460V) + CAPPRM:ASME , CAPPRM:MHLW + MOVOL:460V) + FREQ:60HZ , CAPPRM:MHLW + COOL:AIR + MOVOL:200V) + CAPPRE:IEC , ((MOVOL:230V , MOVOL:575V) + COOL:AIR , MOVOL:460V) + CAPPRE:ULCUL + CAPPRM:ASME + FREQ:60HZ) + IDRY:N + MODEL:GA75VP_16

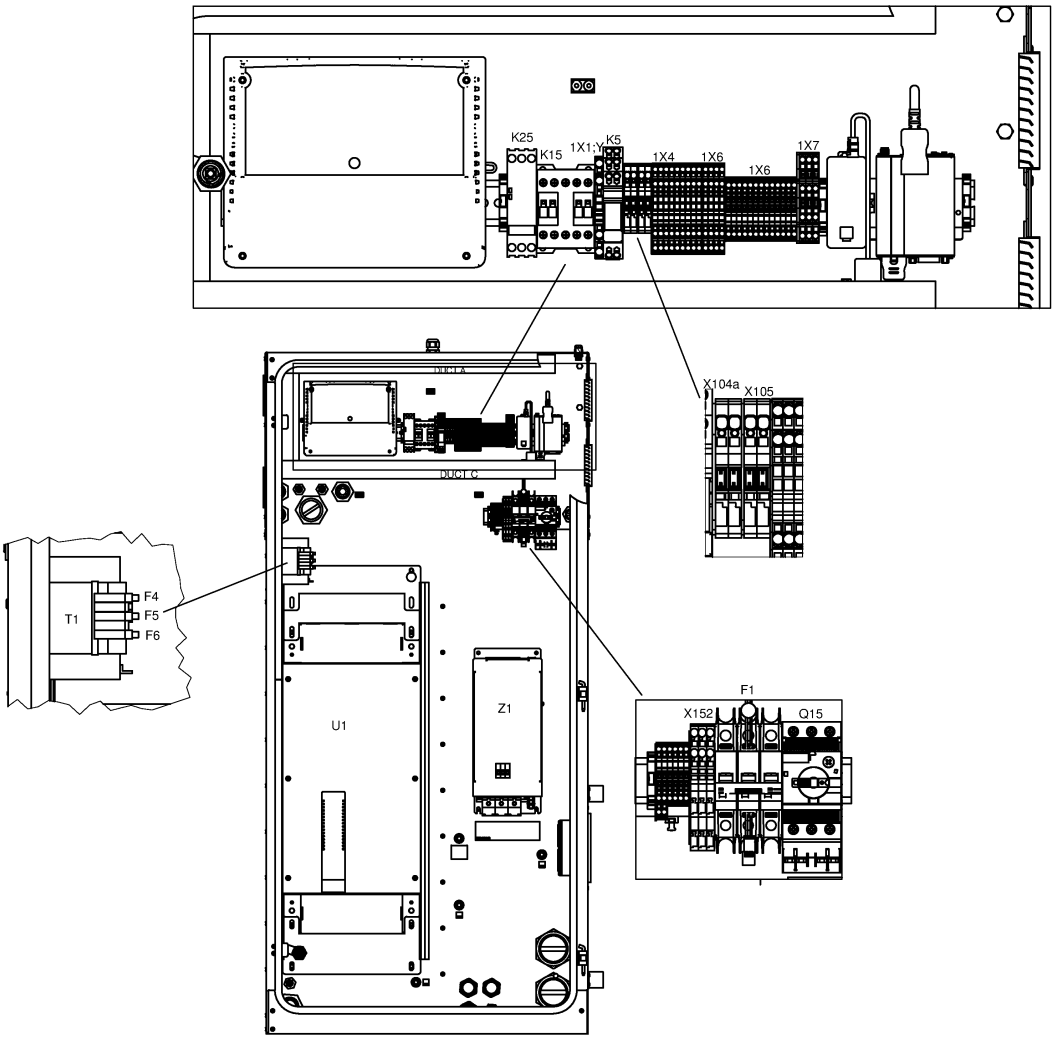

21.5 - Cubicle components GA 75L VSD+ - (200V-400V-500V/50Hz - IEC, 200V-380V-460V/60Hz - IEC, 230V-460V-575V/60Hz - UL-cUL) - Pack (20/07/2017 - 11/12/2018)

((((CAPPRM:AS1210 , CAPPRM:CE , CAPPRM:MHLW , CAPPRM:MOM) + MOVOL:400V , CAPPRM:CE + COOL:AIR + MOVOL:500V) + FREQ:50HZ , ((MOVOL:380V , MOVOL:460V) + CAPPRM:ASME , CAPPRM:MHLW + MOVOL:460V) + FREQ:60HZ , CAPPRM:MHLW + COOL:AIR + MOVOL:200V) + CAPPRE:IEC , ((MOVOL:230V , MOVOL:575V) + COOL:AIR , MOVOL:460V) + CAPPRE:ULCUL + CAPPRM:ASME + FREQ:60HZ) + IDRY:N + MODEL:GA75VP_16

Ref	Part Number	Qty	Name	Validity	EL
	0989 3700 42	2	NUT	**(20/07/2017 - 20/08/2018)** ((((CAPPRM:AS1210 , CAPPRM:CE , CAPPRM:MHLW , CAPPRM:MOM) + MOVOL:400V , CAPPRM:CE + MOVOL:500V , CAPPRM:MHLW + MOVOL:200V) + FREQ:50HZ , ((MOVOL:200V , MOVOL:460V) + CAPPRM:MHLW , (MOVOL:380V , MOVOL:460V) + CAPPRM:ASME) + FREQ:60HZ) + CAPPRE:IEC , (MOVOL:230V , MOVOL:460V , MOVOL:575V) + CAPPRE:ULCUL + CAPPRM:ASME + FREQ:60HZ) + COOL:AIR **(21/08/2018 - 10/12/2018)** **(11/12/2018 - 11/12/2018)** ((((CAPPRM:AS1210 , CAPPRM:CE , CAPPRM:MHLW , CAPPRM:MOM) + MOVOL:400V , (CAPPRM:CE + MOVOL:500V , CAPPRM:MHLW + MOVOL:200V) + COOL:AIR) + FREQ:50HZ , ((CAPPRM:ASME , CAPPRM:MHLW) + COOL:WATER + MOVOL:460V , CAPPRM:ASME + MOVOL:380V , CAPPRM:MHLW + COOL:AIR + MOVOL:200V) + FREQ:60HZ) + CAPPRE:IEC , ((MOVOL:230V , MOVOL:575V) + COOL:AIR , MOVOL:460V) + CAPPRE:ULCUL + CAPPRM:ASME + FREQ:60HZ)	
	Electrical legend:	Locknut for FF Drain/LAT			
	1088 0031 13	1	CONNECTOR 13-POLE	**(20/07/2017 - 20/08/2018)** ((((CAPPRM:AS1210 , CAPPRM:CE , CAPPRM:MHLW , CAPPRM:MOM) + MOVOL:400V , CAPPRM:CE + MOVOL:500V , CAPPRM:MHLW + MOVOL:200V) + FREQ:50HZ , ((MOVOL:200V , MOVOL:460V) + CAPPRM:MHLW , (MOVOL:380V , MOVOL:460V) + CAPPRM:ASME) + FREQ:60HZ) + CAPPRE:IEC , (MOVOL:230V , MOVOL:460V , MOVOL:575V) + CAPPRE:ULCUL + CAPPRM:ASME + FREQ:60HZ) + COOL:AIR **(21/08/2018 - 10/12/2018)** **(11/12/2018 - 11/12/2018)** ((((CAPPRM:AS1210 , CAPPRM:CE , CAPPRM:MHLW , CAPPRM:MOM) + MOVOL:400V , (CAPPRM:CE + MOVOL:500V , CAPPRM:MHLW + MOVOL:200V) + COOL:AIR) + FREQ:50HZ , ((CAPPRM:ASME , CAPPRM:MHLW) + COOL:WATER + MOVOL:460V , CAPPRM:ASME + MOVOL:380V , CAPPRM:MHLW + COOL:AIR + MOVOL:200V) + FREQ:60HZ) + CAPPRE:IEC , ((MOVOL:230V , MOVOL:575V) + COOL:AIR , MOVOL:460V) + CAPPRE:ULCUL + CAPPRM:ASME + FREQ:60HZ)	1X30

Legend:

CAPPRE:IEC - Component approval electrical:IEC
CAPPRE:ULCUL - Component approval electrical:UL/cUL
CAPPRM:AS1210 - Component approval mechanical:AS1210
CAPPRM:ASME - Component approval mechanical:ASME
CAPPRM:CE - Component approval mechanical:CE
CAPPRM:MHLW - Component approval mechanical:MHLW
CAPPRM:MOM - Component approval mechanical:MOM
COOL:AIR - Cooling:Air cooled
COOL:WATER - Cooling:Water cooled
FREQ:50HZ - Frequency:50 Hz
FREQ:60HZ - Frequency:60 Hz
IDRY:N - Integrated dryer:No
MODEL:GA75VP_16 - Model:GA 75VSD+
MOVOL:200V - Supply voltage:200 V
MOVOL:230V - Supply voltage:230 V
MOVOL:380V - Supply voltage:380 V
MOVOL:400V - Supply voltage:400 V
MOVOL:460V - Supply voltage:460 V
MOVOL:500V - Supply voltage:500 V
MOVOL:575V - Supply voltage:575 V

21.5 - Cubicle components GA 75L VSD+ - (200V-400V-500V/50Hz - IEC, 200V-380V-460V/60Hz - IEC, 230V-460V-575V/60Hz - UL-cUL) - Pack (20/07/2017 - 11/12/2018)

((((CAPPRM:AS1210 , CAPPRM:CE , CAPPRM:MHLW , CAPPRM:MOM) + MOVOL:400V , CAPPRM:CE + COOL:AIR + MOVOL:500V) + FREQ:50HZ , ((MOVOL:380V , MOVOL:460V) + CAPPRM:ASME , CAPPRM:MHLW + MOVOL:460V) + FREQ:60HZ , CAPPRM:MHLW + COOL:AIR + MOVOL:200V) + CAPPRE:IEC , ((MOVOL:230V , MOVOL:575V) + COOL:AIR , MOVOL:460V) + CAPPRE:ULCUL + CAPPRM:ASME + FREQ:60HZ) + IDRY:N + MODEL:GA75VP_16

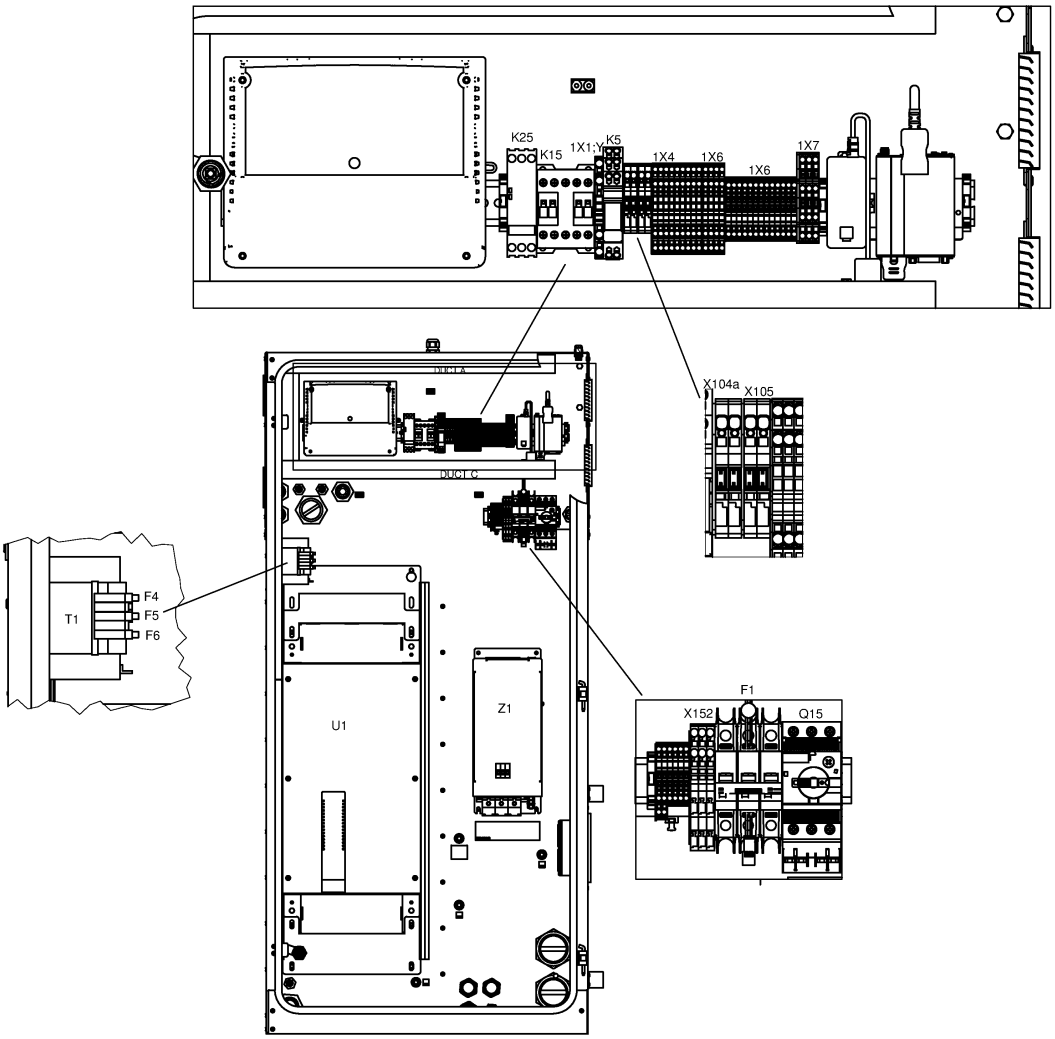

21.5 - Cubicle components GA 75L VSD+ - (200V-400V-500V/50Hz - IEC, 200V-380V-460V/60Hz - IEC, 230V-460V-575V/60Hz - UL-cUL) - Pack (20/07/2017 - 11/12/2018)

((((CAPPRM:AS1210 , CAPPRM:CE , CAPPRM:MHLW , CAPPRM:MOM) + MOVOL:400V , CAPPRM:CE + COOL:AIR + MOVOL:500V) + FREQ:50HZ , ((MOVOL:380V , MOVOL:460V) + CAPPRM:ASME , CAPPRM:MHLW + MOVOL:460V) + FREQ:60HZ , CAPPRM:MHLW + COOL:AIR + MOVOL:200V) + CAPPRE:IEC , ((MOVOL:230V , MOVOL:575V) + COOL:AIR , MOVOL:460V) + CAPPRE:ULCUL + CAPPRM:ASME + FREQ:60HZ) + IDRY:N + MODEL:GA75VP_16

Ref	Part Number	Qty	Name	Validity	EL
	1088 0037 82	1	CONNECTOR	**(20/07/2017 - 20/08/2018)** ((((CAPPRM:AS1210 , CAPPRM:CE , CAPPRM:MHLW , CAPPRM:MOM) + MOVOL:400V , CAPPRM:CE + MOVOL:500V , CAPPRM:MHLW + MOVOL:200V) + FREQ:50HZ , ((MOVOL:200V , MOVOL:460V) + CAPPRM:MHLW , (MOVOL:380V , MOVOL:460V) + CAPPRM:ASME) + FREQ:60HZ) + CAPPRE:IEC , (MOVOL:230V , MOVOL:460V , MOVOL:575V) + CAPPRE:ULCUL + CAPPRM:ASME + FREQ:60HZ) + COOL:AIR **(21/08/2018 - 10/12/2018)** **(11/12/2018 - 11/12/2018)** ((((CAPPRM:AS1210 , CAPPRM:CE , CAPPRM:MHLW , CAPPRM:MOM) + MOVOL:400V , (CAPPRM:CE + MOVOL:500V , CAPPRM:MHLW + MOVOL:200V) + COOL:AIR) + FREQ:50HZ , ((CAPPRM:ASME , CAPPRM:MHLW) + COOL:WATER + MOVOL:460V , CAPPRM:ASME + MOVOL:380V , CAPPRM:MHLW + COOL:AIR + MOVOL:200V) + FREQ:60HZ) + CAPPRE:IEC , ((MOVOL:230V , MOVOL:575V) + COOL:AIR , MOVOL:460V) + CAPPRE:ULCUL + CAPPRM:ASME + FREQ:60HZ)	3X34
	0697 9811 13	1	PLUG M25	**(20/07/2017 - 20/08/2018)** ((((CAPPRM:AS1210 , CAPPRM:CE , CAPPRM:MHLW , CAPPRM:MOM) + MOVOL:400V , CAPPRM:CE + MOVOL:500V , CAPPRM:MHLW + MOVOL:200V) + FREQ:50HZ , ((MOVOL:200V , MOVOL:460V) + CAPPRM:MHLW , (MOVOL:380V , MOVOL:460V) + CAPPRM:ASME) + FREQ:60HZ) + CAPPRE:IEC , (MOVOL:230V , MOVOL:460V , MOVOL:575V) + CAPPRE:ULCUL + CAPPRM:ASME + FREQ:60HZ) + COOL:AIR **(21/08/2018 - 10/12/2018)** **(11/12/2018 - 11/12/2018)** ((((CAPPRM:AS1210 , CAPPRM:CE , CAPPRM:MHLW , CAPPRM:MOM) + MOVOL:400V , (CAPPRM:CE + MOVOL:500V , CAPPRM:MHLW + MOVOL:200V) + COOL:AIR) + FREQ:50HZ , ((CAPPRM:ASME , CAPPRM:MHLW) + COOL:WATER + MOVOL:460V , CAPPRM:ASME + MOVOL:380V , CAPPRM:MHLW + COOL:AIR + MOVOL:200V) + FREQ:60HZ) + CAPPRE:IEC , ((MOVOL:230V , MOVOL:575V) + COOL:AIR , MOVOL:460V) + CAPPRE:ULCUL + CAPPRM:ASME + FREQ:60HZ)	

Electrical legend: Energy recovery

Legend:

CAPPRE:IEC - Component approval electrical:IEC
CAPPRE:ULCUL - Component approval electrical:UL/cUL
CAPPRM:AS1210 - Component approval mechanical:AS1210
CAPPRM:ASME - Component approval mechanical:ASME
CAPPRM:CE - Component approval mechanical:CE
CAPPRM:MHLW - Component approval mechanical:MHLW
CAPPRM:MOM - Component approval mechanical:MOM
COOL:AIR - Cooling:Air cooled
COOL:WATER - Cooling:Water cooled
FREQ:50HZ - Frequency:50 Hz
FREQ:60HZ - Frequency:60 Hz
IDRY:N - Integrated dryer:No
MODEL:GA75VP_16 - Model:GA 75VSD+
MOVOL:200V - Supply voltage:200 V
MOVOL:230V - Supply voltage:230 V
MOVOL:380V - Supply voltage:380 V
MOVOL:400V - Supply voltage:400 V
MOVOL:460V - Supply voltage:460 V
MOVOL:500V - Supply voltage:500 V
MOVOL:575V - Supply voltage:575 V

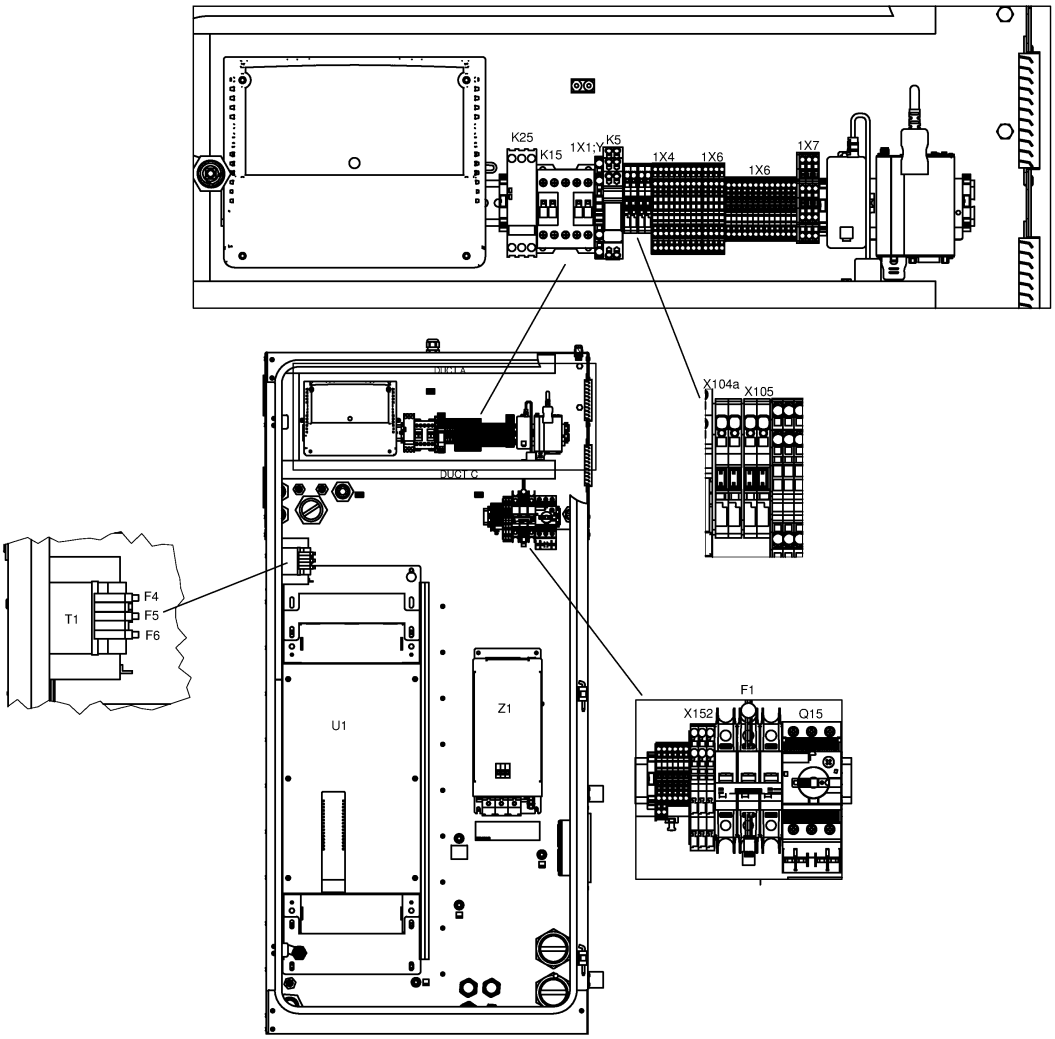
K25
K15
1X1:Y
K5
1X4
1X6
1X6
1X7
DUCT A
DUCT C
X104a
X105
T1
F4
F5
F6
U1
Z1
F1
X152
Q15

21.5 - Cubicle components GA 75L VSD+ - (200V-400V-500V/50Hz - IEC, 200V-380V-460V/60Hz - IEC, 230V-460V-575V/60Hz - UL-cUL) - Pack (20/07/2017 - 11/12/2018)

((((CAPPRM:AS1210 , CAPPRM:CE , CAPPRM:MHLW , CAPPRM:MOM) + MOVOL:400V , CAPPRM:CE + COOL:AIR + MOVOL:500V) + FREQ:50HZ , ((MOVOL:380V , MOVOL:460V) + CAPPRM:ASME , CAPPRM:MHLW + MOVOL:460V) + FREQ:60HZ , CAPPRM:MHLW + COOL:AIR + MOVOL:200V) + CAPPRE:IEC , ((MOVOL:230V , MOVOL:575V) + COOL:AIR , MOVOL:460V) + CAPPRE:ULCUL + CAPPRM:ASME + FREQ:60HZ) + IDRY:N + MODEL:GA75VP_16

Ref	Part Number	Qty	Name	Validity	EL
	0989 3700 44	1	LOCKNUT	**(20/07/2017 - 20/08/2018)** ((((CAPPRM:AS1210 , CAPPRM:CE , CAPPRM:MHLW , CAPPRM:MOM) + MOVOL:400V , CAPPRM:CE + MOVOL:500V , CAPPRM:MHLW + MOVOL:200V) + FREQ:50HZ , ((MOVOL:200V , MOVOL:460V) + CAPPRM:MHLW , (MOVOL:380V , MOVOL:460V) + CAPPRM:ASME) + FREQ:60HZ) + CAPPRE:IEC , (MOVOL:230V , MOVOL:460V , MOVOL:575V) + CAPPRE:ULCUL + CAPPRM:ASME + FREQ:60HZ) + COOL:AIR **(21/08/2018 - 10/12/2018)** **(11/12/2018 - 11/12/2018)** ((((CAPPRM:AS1210 , CAPPRM:CE , CAPPRM:MHLW , CAPPRM:MOM) + MOVOL:400V , (CAPPRM:CE + MOVOL:500V , CAPPRM:MHLW + MOVOL:200V) + COOL:AIR) + FREQ:50HZ , ((CAPPRM:ASME , CAPPRM:MHLW) + COOL:WATER + MOVOL:460V , CAPPRM:ASME + MOVOL:380V , CAPPRM:MHLW + COOL:AIR + MOVOL:200V) + FREQ:60HZ) + CAPPRE:IEC , ((MOVOL:230V , MOVOL:575V) + COOL:AIR , MOVOL:460V) + CAPPRE:ULCUL + CAPPRM:ASME + FREQ:60HZ)	
	Electrical legend:	Energy recovery			
	0697 9811 12	1	PLUG	**(20/07/2017 - 20/08/2018)** ((((CAPPRM:AS1210 , CAPPRM:CE , CAPPRM:MHLW , CAPPRM:MOM) + MOVOL:400V , CAPPRM:CE + MOVOL:500V , CAPPRM:MHLW + MOVOL:200V) + FREQ:50HZ , ((MOVOL:200V , MOVOL:460V) + CAPPRM:MHLW , (MOVOL:380V , MOVOL:460V) + CAPPRM:ASME) + FREQ:60HZ) + CAPPRE:IEC , (MOVOL:230V , MOVOL:460V , MOVOL:575V) + CAPPRE:ULCUL + CAPPRM:ASME + FREQ:60HZ) + COOL:AIR **(21/08/2018 - 10/12/2018)** **(11/12/2018 - 11/12/2018)** ((((CAPPRM:AS1210 , CAPPRM:CE , CAPPRM:MHLW , CAPPRM:MOM) + MOVOL:400V , (CAPPRM:CE + MOVOL:500V , CAPPRM:MHLW + MOVOL:200V) + COOL:AIR) + FREQ:50HZ , ((CAPPRM:ASME , CAPPRM:MHLW) + COOL:WATER + MOVOL:460V , CAPPRM:ASME + MOVOL:380V , CAPPRM:MHLW + COOL:AIR + MOVOL:200V) + FREQ:60HZ) + CAPPRE:IEC , ((MOVOL:230V , MOVOL:575V) + COOL:AIR , MOVOL:460V) + CAPPRE:ULCUL + CAPPRM:ASME + FREQ:60HZ)	
	Electrical legend:	Control circuit of T10			

Legend:

CAPPRE:IEC - Component approval electrical:IEC
CAPPRE:ULCUL - Component approval electrical:UL/cUL
CAPPRM:AS1210 - Component approval mechanical:AS1210
CAPPRM:ASME - Component approval mechanical:ASME
CAPPRM:CE - Component approval mechanical:CE
CAPPRM:MHLW - Component approval mechanical:MHLW
CAPPRM:MOM - Component approval mechanical:MOM
COOL:AIR - Cooling:Air cooled
COOL:WATER - Cooling:Water cooled
FREQ:50HZ - Frequency:50 Hz
FREQ:60HZ - Frequency:60 Hz
IDRY:N - Integrated dryer:No
MODEL:GA75VP_16 - Model:GA 75VSD+
MOVOL:200V - Supply voltage:200 V
MOVOL:230V - Supply voltage:230 V
MOVOL:380V - Supply voltage:380 V
MOVOL:400V - Supply voltage:400 V
MOVOL:460V - Supply voltage:460 V
MOVOL:500V - Supply voltage:500 V
MOVOL:575V - Supply voltage:575 V

21.5 - Cubicle components GA 75L VSD+ - (200V-400V-500V/50Hz - IEC, 200V-380V-460V/60Hz - IEC, 230V-460V-575V/60Hz - UL-cUL) - Pack (20/07/2017 - 11/12/2018)

((((CAPPRM:AS1210 , CAPPRM:CE , CAPPRM:MHLW , CAPPRM:MOM) + MOVOL:400V , CAPPRM:CE + COOL:AIR + MOVOL:500V) + FREQ:50HZ , ((MOVOL:380V , MOVOL:460V) + CAPPRM:ASME , CAPPRM:MHLW + MOVOL:460V) + FREQ:60HZ , CAPPRM:MHLW + COOL:AIR + MOVOL:200V) + CAPPRE:IEC , ((MOVOL:230V , MOVOL:575V) + COOL:AIR , MOVOL:460V) + CAPPRE:ULCUL + CAPPRM:ASME + FREQ:60HZ) + IDRY:N + MODEL:GA75VP_16

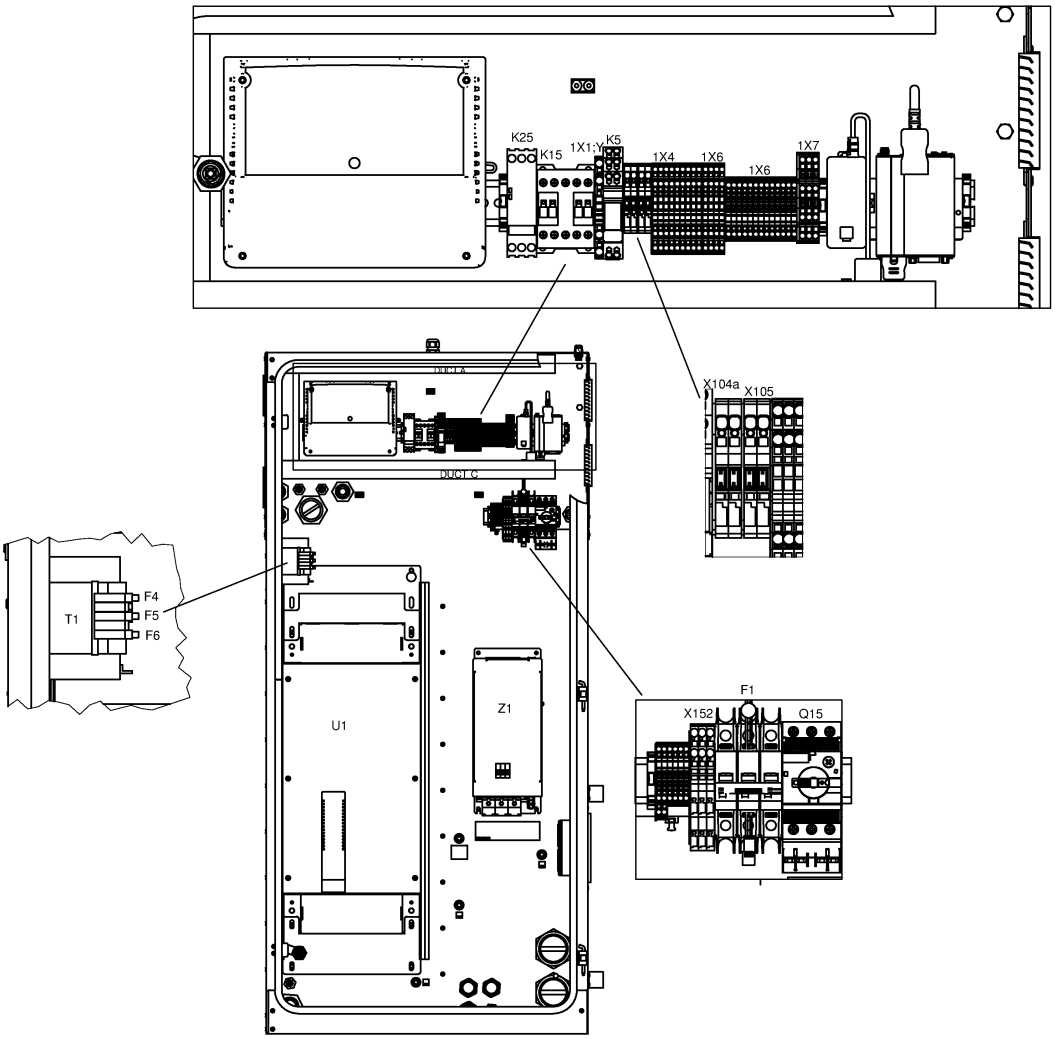

21.5 - Cubicle components GA 75L VSD+ - (200V-400V-500V/50Hz - IEC, 200V-380V-460V/60Hz - IEC, 230V-460V-575V/60Hz - UL-cUL) - Pack (20/07/2017 - 11/12/2018)

((((CAPPRM:AS1210 , CAPPRM:CE , CAPPRM:MHLW , CAPPRM:MOM) + MOVOL:400V , CAPPRM:CE + COOL:AIR + MOVOL:500V) + FREQ:50HZ , ((MOVOL:380V , MOVOL:460V) + CAPPRM:ASME , CAPPRM:MHLW + MOVOL:460V) + FREQ:60HZ , CAPPRM:MHLW + COOL:AIR + MOVOL:200V) + CAPPRE:IEC , ((MOVOL:230V , MOVOL:575V) + COOL:AIR , MOVOL:460V) + CAPPRE:ULCUL + CAPPRM:ASME + FREQ:60HZ) + IDRY:N + MODEL:GA75VP_16

Ref	Part Number	Qty	Name	Validity	EL
	0989 3700 43	1	NUT	**(20/07/2017 - 20/08/2018)** ((((CAPPRM:AS1210 , CAPPRM:CE , CAPPRM:MHLW , CAPPRM:MOM) + MOVOL:400V , CAPPRM:CE + MOVOL:500V , CAPPRM:MHLW + MOVOL:200V) + FREQ:50HZ , ((MOVOL:200V , MOVOL:460V) + CAPPRM:MHLW , (MOVOL:380V , MOVOL:460V) + CAPPRM:ASME) + FREQ:60HZ) + CAPPRE:IEC , (MOVOL:230V , MOVOL:460V , MOVOL:575V) + CAPPRE:ULCUL + CAPPRM:ASME + FREQ:60HZ) + COOL:AIR **(21/08/2018 - 10/12/2018)** **(11/12/2018 - 11/12/2018)** ((((CAPPRM:AS1210 , CAPPRM:CE , CAPPRM:MHLW , CAPPRM:MOM) + MOVOL:400V , (CAPPRM:CE + MOVOL:500V , CAPPRM:MHLW + MOVOL:200V) + COOL:AIR) + FREQ:50HZ , ((CAPPRM:ASME , CAPPRM:MHLW) + COOL:WATER + MOVOL:460V , CAPPRM:ASME + MOVOL:380V , CAPPRM:MHLW + COOL:AIR + MOVOL:200V) + FREQ:60HZ) + CAPPRE:IEC , ((MOVOL:230V , MOVOL:575V) + COOL:AIR , MOVOL:460V) + CAPPRE:ULCUL + CAPPRM:ASME + FREQ:60HZ)	

Electrical legend: Control circuit of T10

Legend:

CAPPRE:IEC - Component approval electrical:IEC
CAPPRE:ULCUL - Component approval electrical:UL/cUL
CAPPRM:AS1210 - Component approval mechanical:AS1210
CAPPRM:ASME - Component approval mechanical:ASME
CAPPRM:CE - Component approval mechanical:CE
CAPPRM:MHLW - Component approval mechanical:MHLW
CAPPRM:MOM - Component approval mechanical:MOM
COOL:AIR - Cooling:Air cooled
COOL:WATER - Cooling:Water cooled
FREQ:50HZ - Frequency:50 Hz
FREQ:60HZ - Frequency:60 Hz
IDRY:N - Integrated dryer:No
MODEL:GA75VP_16 - Model:GA 75VSD+
MOVOL:200V - Supply voltage:200 V
MOVOL:230V - Supply voltage:230 V
MOVOL:380V - Supply voltage:380 V
MOVOL:400V - Supply voltage:400 V
MOVOL:460V - Supply voltage:460 V
MOVOL:500V - Supply voltage:500 V
MOVOL:575V - Supply voltage:575 V

21.6 - Cubicle components GA 75L VSD+ - (200V-400V-500V/50Hz - IEC, 200V-380V-460V/60Hz - IEC, 230V-460V-575V/60Hz - UL-cUL) - Pack (12/12/2018 - 27/11/2019)

((((CAPPRM:AS1210 , CAPPRM:CE , CAPPRM:MHLW , CAPPRM:MOM) + MOVOL:400V , CAPPRM:CE + COOL:AIR + MOVOL:500V) + FREQ:50HZ , ((MOVOL:380V , MOVOL:460V) + CAPPRM:ASME , CAPPRM:MHLW + MOVOL:460V) + FREQ:60HZ , CAPPRM:MHLW + COOL:AIR + MOVOL:200V) + CAPPRE:IEC , ((MOVOL:230V , MOVOL:575V) + COOL:AIR , MOVOL:460V) + CAPPRE:ULCUL + CAPPRM:ASME + FREQ:60HZ) + IDRY:N + MODEL:GA75VP_16

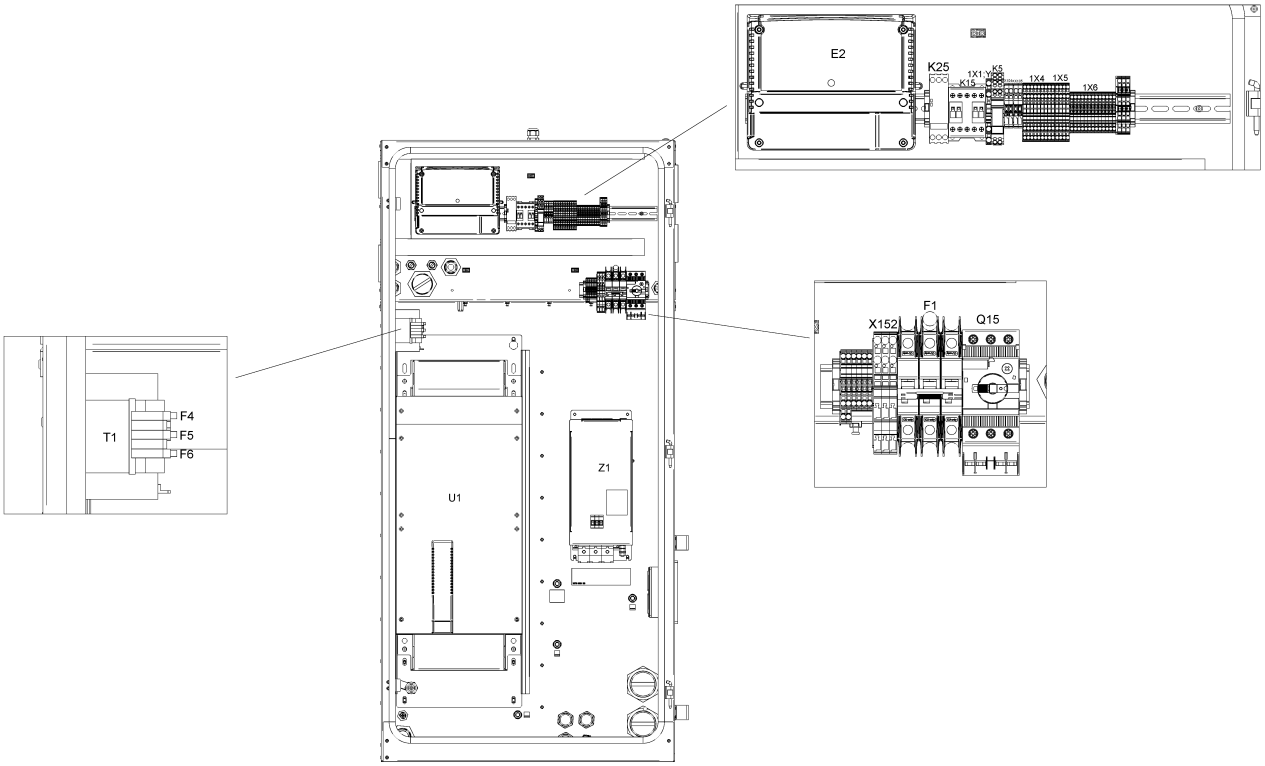

21.6 - Cubicle components GA 75L VSD+ - (200V-400V-500V/50Hz - IEC, 200V-380V-460V/60Hz - IEC, 230V-460V-575V/60Hz - UL-cUL) - Pack (12/12/2018 - 27/11/2019)

((((CAPPRM:AS1210 , CAPPRM:CE , CAPPRM:MHLW , CAPPRM:MOM) + MOVOL:400V , CAPPRM:CE + COOL:AIR + MOVOL:500V) + FREQ:50HZ , ((MOVOL:380V , MOVOL:460V) + CAPPRM:ASME , CAPPRM:MHLW + MOVOL:460V) + FREQ:60HZ , CAPPRM:MHLW + COOL:AIR + MOVOL:200V) + CAPPRE:IEC , ((MOVOL:230V , MOVOL:575V) + COOL:AIR , MOVOL:460V) + CAPPRE:ULCUL + CAPPRM:ASME + FREQ:60HZ) + IDRY:N + MODEL:GA75VP_16

Ref	Part Number	Qty	Name	Validity	EL
	1900 2202 21	1	CUBICLE	**(12/12/2018 - 27/11/2019)**	
	9820 3000 31	1	ASSEMBLY DRAWING	**(12/12/2018 - 24/02/2019)** ((((CAPPRM:AS1210 , CAPPRM:CE , CAPPRM:MHLW , CAPPRM:MOM) + MOVOL:400V , (CAPPRM:CE + MOVOL:500V , CAPPRM:MHLW + MOVOL:200V) + COOL:AIR) + FREQ:50HZ , ((COOL:AIR + MOVOL:200V , MOVOL:460V) + CAPPRM:MHLW , (MOVOL:380V , MOVOL:460V) + CAPPRM:ASME) + FREQ:60HZ) + CAPPRE:IEC , ((MOVOL:230V , MOVOL:575V) + COOL:AIR , MOVOL:460V) + CAPPRE:ULCUL + CAPPRM:ASME + FREQ:60HZ) **(25/02/2019 - 27/11/2019)** ((((CAPPRM:AS1210 , CAPPRM:CE , CAPPRM:MHLW , CAPPRM:MOM) + MOVOL:400V , CAPPRM:CE + MOVOL:500V , CAPPRM:MHLW + MOVOL:200V) + FREQ:50HZ , ((MOVOL:200V , MOVOL:460V) + CAPPRM:MHLW , (MOVOL:380V , MOVOL:460V) + CAPPRM:ASME) + FREQ:60HZ) + CAPPRE:IEC , (MOVOL:230V , MOVOL:460V , MOVOL:575V) + CAPPRE:ULCUL + CAPPRM:ASME + FREQ:60HZ) + COOL:AIR	AD
	9820 3000 27	1	SERVICE DIAGRAM	**(12/12/2018 - 24/02/2019)** ((((CAPPRM:AS1210 , CAPPRM:CE , CAPPRM:MHLW , CAPPRM:MOM) + MOVOL:400V , (CAPPRM:CE + MOVOL:500V , CAPPRM:MHLW + MOVOL:200V) + COOL:AIR) + FREQ:50HZ , ((COOL:AIR + MOVOL:200V , MOVOL:460V) + CAPPRM:MHLW , (MOVOL:380V , MOVOL:460V) + CAPPRM:ASME) + FREQ:60HZ) + CAPPRE:IEC , ((MOVOL:230V , MOVOL:575V) + COOL:AIR , MOVOL:460V) + CAPPRE:ULCUL + CAPPRM:ASME + FREQ:60HZ) **(25/02/2019 - 27/11/2019)** ((((CAPPRM:AS1210 , CAPPRM:CE , CAPPRM:MHLW , CAPPRM:MOM) + MOVOL:400V , CAPPRM:CE + MOVOL:500V , CAPPRM:MHLW + MOVOL:200V) + FREQ:50HZ , ((MOVOL:200V , MOVOL:460V) + CAPPRM:MHLW , (MOVOL:380V , MOVOL:460V) + CAPPRM:ASME) + FREQ:60HZ) + CAPPRE:IEC , (MOVOL:230V , MOVOL:460V , MOVOL:575V) + CAPPRE:ULCUL + CAPPRM:ASME + FREQ:60HZ) + COOL:AIR	SD
	1622 3798 72	1	WIRE HARNESS	**(12/12/2018 - 24/02/2019)** ((((CAPPRM:AS1210 , CAPPRM:CE , CAPPRM:MHLW , CAPPRM:MOM) + MOVOL:400V , (CAPPRM:CE + MOVOL:500V , CAPPRM:MHLW + MOVOL:200V) + COOL:AIR) + FREQ:50HZ , ((COOL:AIR + MOVOL:200V , MOVOL:460V) + CAPPRM:MHLW , (MOVOL:380V , MOVOL:460V) + CAPPRM:ASME) + FREQ:60HZ) + CAPPRE:IEC , ((MOVOL:230V , MOVOL:575V) + COOL:AIR , MOVOL:460V) + CAPPRE:ULCUL + CAPPRM:ASME + FREQ:60HZ) **(25/02/2019 - 27/11/2019)** ((((CAPPRM:AS1210 , CAPPRM:CE , CAPPRM:MHLW , CAPPRM:MOM) + MOVOL:400V , CAPPRM:CE + MOVOL:500V , CAPPRM:MHLW + MOVOL:200V) + FREQ:50HZ , ((MOVOL:200V , MOVOL:460V) + CAPPRM:MHLW , (MOVOL:380V , MOVOL:460V) + CAPPRM:ASME) + FREQ:60HZ) + CAPPRE:IEC , (MOVOL:230V , MOVOL:460V , MOVOL:575V) + CAPPRE:ULCUL + CAPPRM:ASME + FREQ:60HZ) + COOL:AIR	Comm Cable

Legend:

CAPPRE:IEC - Component approval electrical:IEC
CAPPRE:ULCUL - Component approval electrical:UL/cUL
CAPPRM:AS1210 - Component approval mechanical:AS1210
CAPPRM:ASME - Component approval mechanical:ASME
CAPPRM:CE - Component approval mechanical:CE
CAPPRM:MHLW - Component approval mechanical:MHLW
CAPPRM:MOM - Component approval mechanical:MOM
COOL:AIR - Cooling:Air cooled
FREQ:50HZ - Frequency:50 Hz
FREQ:60HZ - Frequency:60 Hz
IDRY:N - Integrated dryer:No
MODEL:GA75VP_16 - Model:GA 75VSD+
MOVOL:200V - Supply voltage:200 V
MOVOL:230V - Supply voltage:230 V
MOVOL:380V - Supply voltage:380 V
MOVOL:400V - Supply voltage:400 V
MOVOL:460V - Supply voltage:460 V
MOVOL:500V - Supply voltage:500 V
MOVOL:575V - Supply voltage:575 V

21.6 - Cubicle components GA 75L VSD+ - (200V-400V-500V/50Hz - IEC, 200V-380V-460V/60Hz - IEC, 230V-460V-575V/60Hz - UL-cUL) - Pack (12/12/2018 - 27/11/2019)

((((CAPPRM:AS1210 , CAPPRM:CE , CAPPRM:MHLW , CAPPRM:MOM) + MOVOL:400V , CAPPRM:CE + COOL:AIR + MOVOL:500V) + FREQ:50HZ , ((MOVOL:380V , MOVOL:460V) + CAPPRM:ASME , CAPPRM:MHLW + MOVOL:460V) + FREQ:60HZ , CAPPRM:MHLW + COOL:AIR + MOVOL:200V) + CAPPRE:IEC , ((MOVOL:230V , MOVOL:575V) + COOL:AIR , MOVOL:460V) + CAPPRE:ULCUL + CAPPRM:ASME + FREQ:60HZ) + IDRY:N + MODEL:GA75VP_16

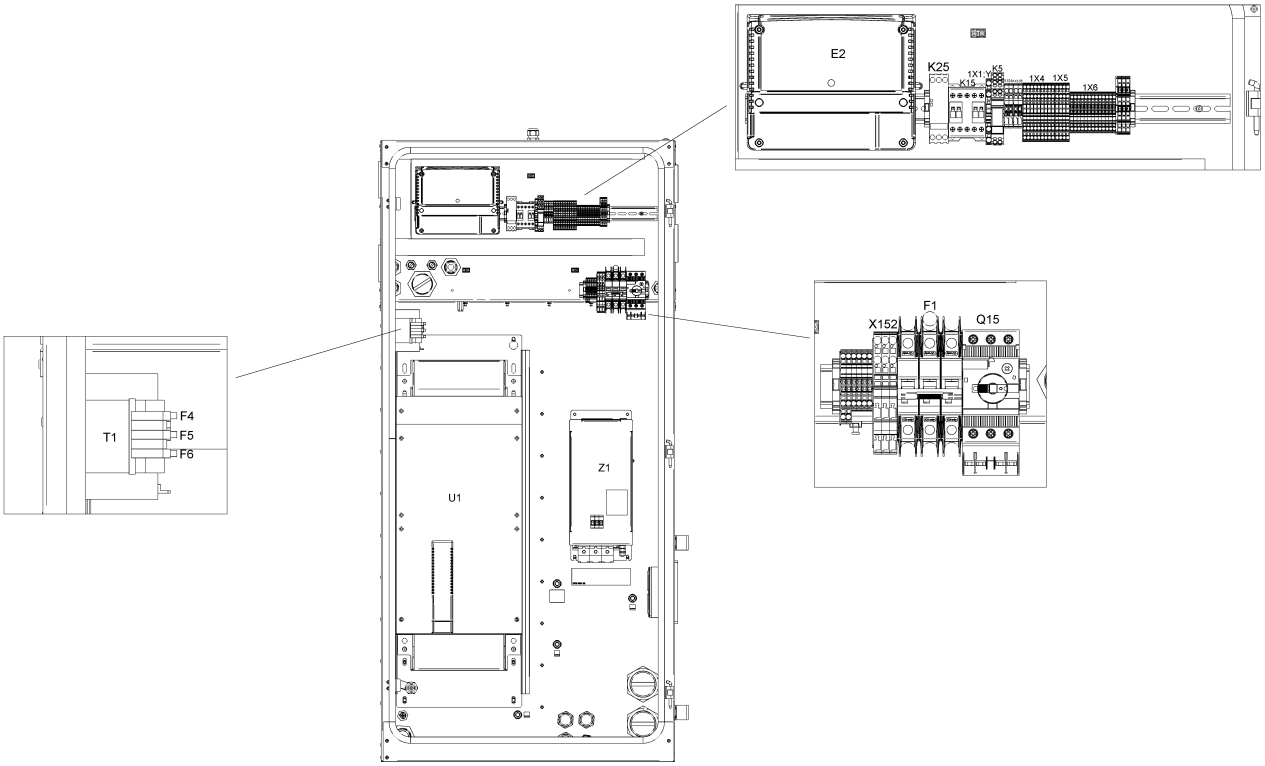

21.6 - Cubicle components GA 75L VSD+ - (200V-400V-500V/50Hz - IEC, 200V-380V-460V/60Hz - IEC, 230V-460V-575V/60Hz - UL-cUL) - Pack (12/12/2018 - 27/11/2019)

((((CAPPRM:AS1210 , CAPPRM:CE , CAPPRM:MHLW , CAPPRM:MOM) + MOVOL:400V , CAPPRM:CE + COOL:AIR + MOVOL:500V) + FREQ:50HZ , ((MOVOL:380V , MOVOL:460V) + CAPPRM:ASME , CAPPRM:MHLW + MOVOL:460V) + FREQ:60HZ , CAPPRM:MHLW + COOL:AIR + MOVOL:200V) + CAPPRE:IEC , ((MOVOL:230V , MOVOL:575V) + COOL:AIR , MOVOL:460V) + CAPPRE:ULCUL + CAPPRM:ASME + FREQ:60HZ) + IDRY:N + MODEL:GA75VP_16

Ref	Part Number	Qty	Name	Validity	EL
	1622 5099 04	1	DI CHANE CABLE (1400MM)	**(12/12/2018 - 24/02/2019)** ((((CAPPRM:AS1210 , CAPPRM:CE , CAPPRM:MHLW , CAPPRM:MOM) + MOVOL:400V , (CAPPRM:CE + MOVOL:500V , CAPPRM:MHLW + MOVOL:200V) + COOL:AIR) + FREQ:50HZ , ((COOL:AIR + MOVOL:200V , MOVOL:460V) + CAPPRM:MHLW , (MOVOL:380V , MOVOL:460V) + CAPPRM:ASME) + FREQ:60HZ) + CAPPRE:IEC , ((MOVOL:230V , MOVOL:575V) + COOL:AIR , MOVOL:460V) + CAPPRE:ULCUL + CAPPRM:ASME + FREQ:60HZ) **(25/02/2019 - 27/11/2019)** ((((CAPPRM:AS1210 , CAPPRM:CE , CAPPRM:MHLW , CAPPRM:MOM) + MOVOL:400V , CAPPRM:CE + MOVOL:500V , CAPPRM:MHLW + MOVOL:200V) + FREQ:50HZ , ((MOVOL:200V , MOVOL:460V) + CAPPRM:MHLW , (MOVOL:380V , MOVOL:460V) + CAPPRM:ASME) + FREQ:60HZ) + CAPPRE:IEC , (MOVOL:230V , MOVOL:460V , MOVOL:575V) + CAPPRE:ULCUL + CAPPRM:ASME + FREQ:60HZ) + COOL:AIR	
Electrical legend:	Comm Cable Loose supply				
	1649 8001 22	1	CUBICLE	**(12/12/2018 - 24/02/2019)** ((((CAPPRM:AS1210 , CAPPRM:CE , CAPPRM:MHLW , CAPPRM:MOM) + MOVOL:400V , (CAPPRM:CE + MOVOL:500V , CAPPRM:MHLW + MOVOL:200V) + COOL:AIR) + FREQ:50HZ , ((COOL:AIR + MOVOL:200V , MOVOL:460V) + CAPPRM:MHLW , (MOVOL:380V , MOVOL:460V) + CAPPRM:ASME) + FREQ:60HZ) + CAPPRE:IEC , ((MOVOL:230V , MOVOL:575V) + COOL:AIR , MOVOL:460V) + CAPPRE:ULCUL + CAPPRM:ASME + FREQ:60HZ) **(25/02/2019 - 27/11/2019)** ((((CAPPRM:AS1210 , CAPPRM:CE , CAPPRM:MHLW , CAPPRM:MOM) + MOVOL:400V , CAPPRM:CE + MOVOL:500V , CAPPRM:MHLW + MOVOL:200V) + FREQ:50HZ , ((MOVOL:200V , MOVOL:460V) + CAPPRM:MHLW , (MOVOL:380V , MOVOL:460V) + CAPPRM:ASME) + FREQ:60HZ) + CAPPRE:IEC , (MOVOL:230V , MOVOL:460V , MOVOL:575V) + CAPPRE:ULCUL + CAPPRM:ASME + FREQ:60HZ) + COOL:AIR	MSA
	1649 8001 32	1	PLATE NEOS "D"	**(12/12/2018 - 24/02/2019)** ((((CAPPRM:AS1210 , CAPPRM:CE , CAPPRM:MHLW , CAPPRM:MOM) + MOVOL:400V , (CAPPRM:CE + MOVOL:500V , CAPPRM:MHLW + MOVOL:200V) + COOL:AIR) + FREQ:50HZ , ((COOL:AIR + MOVOL:200V , MOVOL:460V) + CAPPRM:MHLW , (MOVOL:380V , MOVOL:460V) + CAPPRM:ASME) + FREQ:60HZ) + CAPPRE:IEC , ((MOVOL:230V , MOVOL:575V) + COOL:AIR , MOVOL:460V) + CAPPRE:ULCUL + CAPPRM:ASME + FREQ:60HZ) **(25/02/2019 - 27/11/2019)** ((((CAPPRM:AS1210 , CAPPRM:CE , CAPPRM:MHLW , CAPPRM:MOM) + MOVOL:400V , CAPPRM:CE + MOVOL:500V , CAPPRM:MHLW + MOVOL:200V) + FREQ:50HZ , ((MOVOL:200V , MOVOL:460V) + CAPPRM:MHLW , (MOVOL:380V , MOVOL:460V) + CAPPRM:ASME) + FREQ:60HZ) + CAPPRE:IEC , (MOVOL:230V , MOVOL:460V , MOVOL:575V) + CAPPRE:ULCUL + CAPPRM:ASME + FREQ:60HZ) + COOL:AIR	
Electrical legend:	Mounting plate				

Legend:

CAPPRE:IEC - Component approval electrical:IEC
CAPPRE:ULCUL - Component approval electrical:UL/cUL
CAPPRM:AS1210 - Component approval mechanical:AS1210
CAPPRM:ASME - Component approval mechanical:ASME
CAPPRM:CE - Component approval mechanical:CE
CAPPRM:MHLW - Component approval mechanical:MHLW
CAPPRM:MOM - Component approval mechanical:MOM
COOL:AIR - Cooling:Air cooled
FREQ:50HZ - Frequency:50 Hz
FREQ:60HZ - Frequency:60 Hz
IDRY:N - Integrated dryer:No
MODEL:GA75VP_16 - Model:GA 75VSD+
MOVOL:200V - Supply voltage:200 V
MOVOL:230V - Supply voltage:230 V
MOVOL:380V - Supply voltage:380 V
MOVOL:400V - Supply voltage:400 V
MOVOL:460V - Supply voltage:460 V
MOVOL:500V - Supply voltage:500 V
MOVOL:575V - Supply voltage:575 V

21.6 - Cubicle components GA 75L VSD+ - (200V-400V-500V/50Hz - IEC, 200V-380V-460V/60Hz - IEC, 230V-460V-575V/60Hz - UL-cUL) - Pack (12/12/2018 - 27/11/2019)

((((CAPPRM:AS1210 , CAPPRM:CE , CAPPRM:MHLW , CAPPRM:MOM) + MOVOL:400V , CAPPRM:CE + COOL:AIR + MOVOL:500V) + FREQ:50HZ , ((MOVOL:380V , MOVOL:460V) + CAPPRM:ASME , CAPPRM:MHLW + MOVOL:460V) + FREQ:60HZ , CAPPRM:MHLW + COOL:AIR + MOVOL:200V) + CAPPRE:IEC , ((MOVOL:230V , MOVOL:575V) + COOL:AIR , MOVOL:460V) + CAPPRE:ULCUL + CAPPRM:ASME + FREQ:60HZ) + IDRY:N + MODEL:GA75VP_16

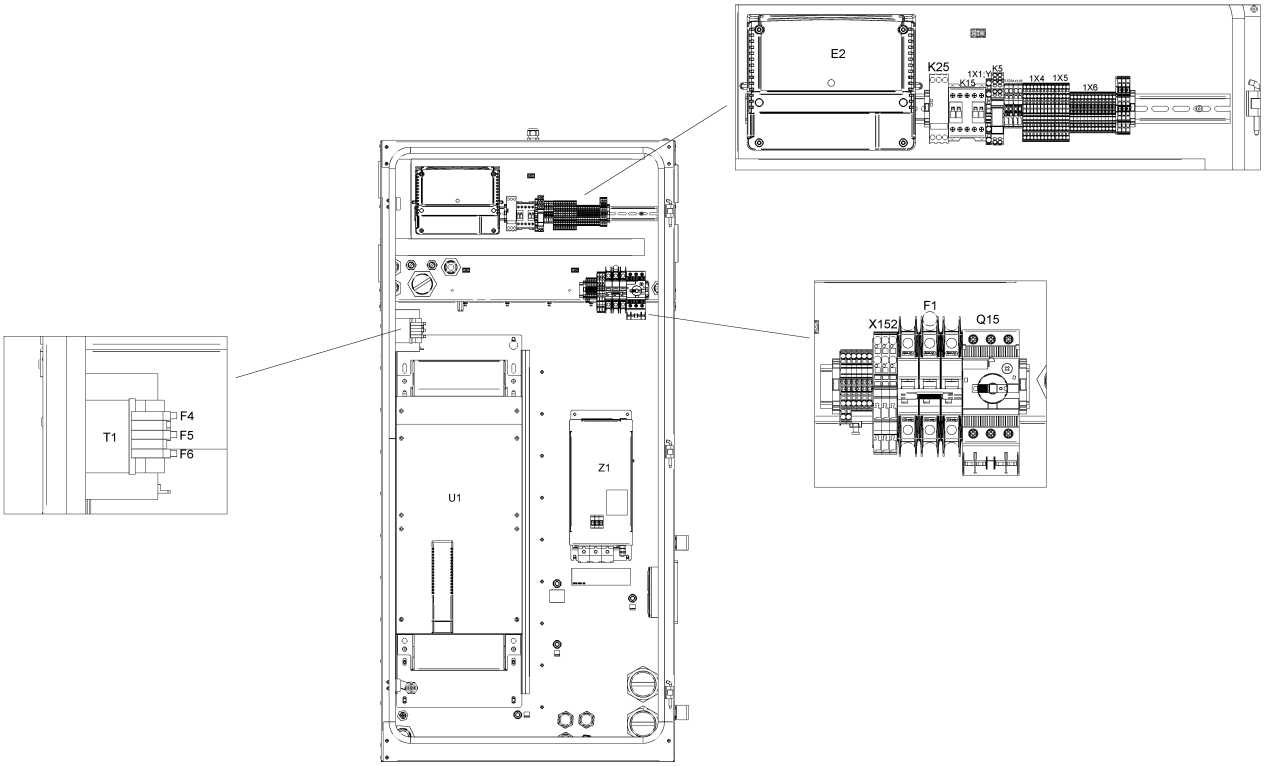

21.6 - Cubicle components GA 75L VSD+ - (200V-400V-500V/50Hz - IEC, 200V-380V-460V/60Hz - IEC, 230V-460V-575V/60Hz - UL-cUL) - Pack (12/12/2018 - 27/11/2019)

((((CAPPRM:AS1210 , CAPPRM:CE , CAPPRM:MHLW , CAPPRM:MOM) + MOVOL:400V , CAPPRM:CE + COOL:AIR + MOVOL:500V) + FREQ:50HZ , ((MOVOL:380V , MOVOL:460V) + CAPPRM:ASME , CAPPRM:MHLW + MOVOL:460V) + FREQ:60HZ , CAPPRM:MHLW + COOL:AIR + MOVOL:200V) + CAPPRE:IEC , ((MOVOL:230V , MOVOL:575V) + COOL:AIR , MOVOL:460V) + CAPPRE:ULCUL + CAPPRM:ASME + FREQ:60HZ) + IDRY:N + MODEL:GA75VP_16

Ref	Part Number	Qty	Name	Validity	EL
	1649 8003 85	1	MOUNTING PLATE	**(12/12/2018 - 24/02/2019)** ((((CAPPRM:AS1210 , CAPPRM:CE , CAPPRM:MHLW , CAPPRM:MOM) + MOVOL:400V , (CAPPRM:CE + MOVOL:500V , CAPPRM:MHLW + MOVOL:200V) + COOL:AIR) + FREQ:50HZ , ((COOL:AIR + MOVOL:200V , MOVOL:460V) + CAPPRM:MHLW , (MOVOL:380V , MOVOL:460V) + CAPPRM:ASME) + FREQ:60HZ) + CAPPRE:IEC , ((MOVOL:230V , MOVOL:575V) + COOL:AIR , MOVOL:460V) + CAPPRE:ULCUL + CAPPRM:ASME + FREQ:60HZ) **(25/02/2019 - 27/11/2019)** ((((CAPPRM:AS1210 , CAPPRM:CE , CAPPRM:MHLW , CAPPRM:MOM) + MOVOL:400V , CAPPRM:CE + MOVOL:500V , CAPPRM:MHLW + MOVOL:200V) + FREQ:50HZ , ((MOVOL:200V , MOVOL:460V) + CAPPRM:MHLW , (MOVOL:380V , MOVOL:460V) + CAPPRM:ASME) + FREQ:60HZ) + CAPPRE:IEC , (MOVOL:230V , MOVOL:460V , MOVOL:575V) + CAPPRE:ULCUL + CAPPRM:ASME + FREQ:60HZ) + COOL:AIR	
	Electrical legend:	Mounting plate			
	1649 8002 39	1	WIRE HARNESS	**(12/12/2018 - 24/02/2019)** ((((CAPPRM:AS1210 , CAPPRM:CE , CAPPRM:MHLW , CAPPRM:MOM) + MOVOL:400V , (CAPPRM:CE + MOVOL:500V , CAPPRM:MHLW + MOVOL:200V) + COOL:AIR) + FREQ:50HZ , ((COOL:AIR + MOVOL:200V , MOVOL:460V) + CAPPRM:MHLW , (MOVOL:380V , MOVOL:460V) + CAPPRM:ASME) + FREQ:60HZ) + CAPPRE:IEC , ((MOVOL:230V , MOVOL:575V) + COOL:AIR , MOVOL:460V) + CAPPRE:ULCUL + CAPPRM:ASME + FREQ:60HZ) **(25/02/2019 - 27/11/2019)** ((((CAPPRM:AS1210 , CAPPRM:CE , CAPPRM:MHLW , CAPPRM:MOM) + MOVOL:400V , CAPPRM:CE + MOVOL:500V , CAPPRM:MHLW + MOVOL:200V) + FREQ:50HZ , ((MOVOL:200V , MOVOL:460V) + CAPPRM:MHLW , (MOVOL:380V , MOVOL:460V) + CAPPRM:ASME) + FREQ:60HZ) + CAPPRE:IEC , (MOVOL:230V , MOVOL:460V , MOVOL:575V) + CAPPRE:ULCUL + CAPPRM:ASME + FREQ:60HZ) + COOL:AIR	WH
	1649 8002 40	1	WIRE HARNESS	**(12/12/2018 - 24/02/2019)** ((((CAPPRM:AS1210 , CAPPRM:CE , CAPPRM:MHLW , CAPPRM:MOM) + MOVOL:400V , (CAPPRM:CE + MOVOL:500V , CAPPRM:MHLW + MOVOL:200V) + COOL:AIR) + FREQ:50HZ , ((COOL:AIR + MOVOL:200V , MOVOL:460V) + CAPPRM:MHLW , (MOVOL:380V , MOVOL:460V) + CAPPRM:ASME) + FREQ:60HZ) + CAPPRE:IEC , ((MOVOL:230V , MOVOL:575V) + COOL:AIR , MOVOL:460V) + CAPPRE:ULCUL + CAPPRM:ASME + FREQ:60HZ) **(25/02/2019 - 27/11/2019)** ((((CAPPRM:AS1210 , CAPPRM:CE , CAPPRM:MHLW , CAPPRM:MOM) + MOVOL:400V , CAPPRM:CE + MOVOL:500V , CAPPRM:MHLW + MOVOL:200V) + FREQ:50HZ , ((MOVOL:200V , MOVOL:460V) + CAPPRM:MHLW , (MOVOL:380V , MOVOL:460V) + CAPPRM:ASME) + FREQ:60HZ) + CAPPRE:IEC , (MOVOL:230V , MOVOL:460V , MOVOL:575V) + CAPPRE:ULCUL + CAPPRM:ASME + FREQ:60HZ) + COOL:AIR	WH

Legend:

CAPPRE:IEC - Component approval electrical:IEC
CAPPRM:ASME - Component approval mechanical:ASME
CAPPRM:MOM - Component approval mechanical:MOM
FREQ:60HZ - Frequency:60 Hz
MOVOL:200V - Supply voltage:200 V
MOVOL:400V - Supply voltage:400 V
MOVOL:575V - Supply voltage:575 V
CAPPRE:ULCUL - Component approval electrical:UL/cUL
CAPPRM:CE - Component approval mechanical:CE
COOL:AIR - Cooling:Air cooled
IDRY:N - Integrated dryer:No
MOVOL:230V - Supply voltage:230 V
MOVOL:460V - Supply voltage:460 V
CAPPRM:AS1210 - Component approval mechanical:AS1210
CAPPRM:MHLW - Component approval mechanical:MHLW
FREQ:50HZ - Frequency:50 Hz
MODEL:GA75VP_16 - Model:GA 75VSD+
MOVOL:380V - Supply voltage:380 V
MOVOL:500V - Supply voltage:500 V

21.6 - Cubicle components GA 75L VSD+ - (200V-400V-500V/50Hz - IEC, 200V-380V-460V/60Hz - IEC, 230V-460V-575V/60Hz - UL-cUL) - Pack (12/12/2018 - 27/11/2019)

((((CAPPRM:AS1210 , CAPPRM:CE , CAPPRM:MHLW , CAPPRM:MOM) + MOVOL:400V , CAPPRM:CE + COOL:AIR + MOVOL:500V) + FREQ:50HZ , ((MOVOL:380V , MOVOL:460V) + CAPPRM:ASME , CAPPRM:MHLW + MOVOL:460V) + FREQ:60HZ , CAPPRM:MHLW + COOL:AIR + MOVOL:200V) + CAPPRE:IEC , ((MOVOL:230V , MOVOL:575V) + COOL:AIR , MOVOL:460V) + CAPPRE:ULCUL + CAPPRM:ASME + FREQ:60HZ) + IDRY:N + MODEL:GA75VP_16

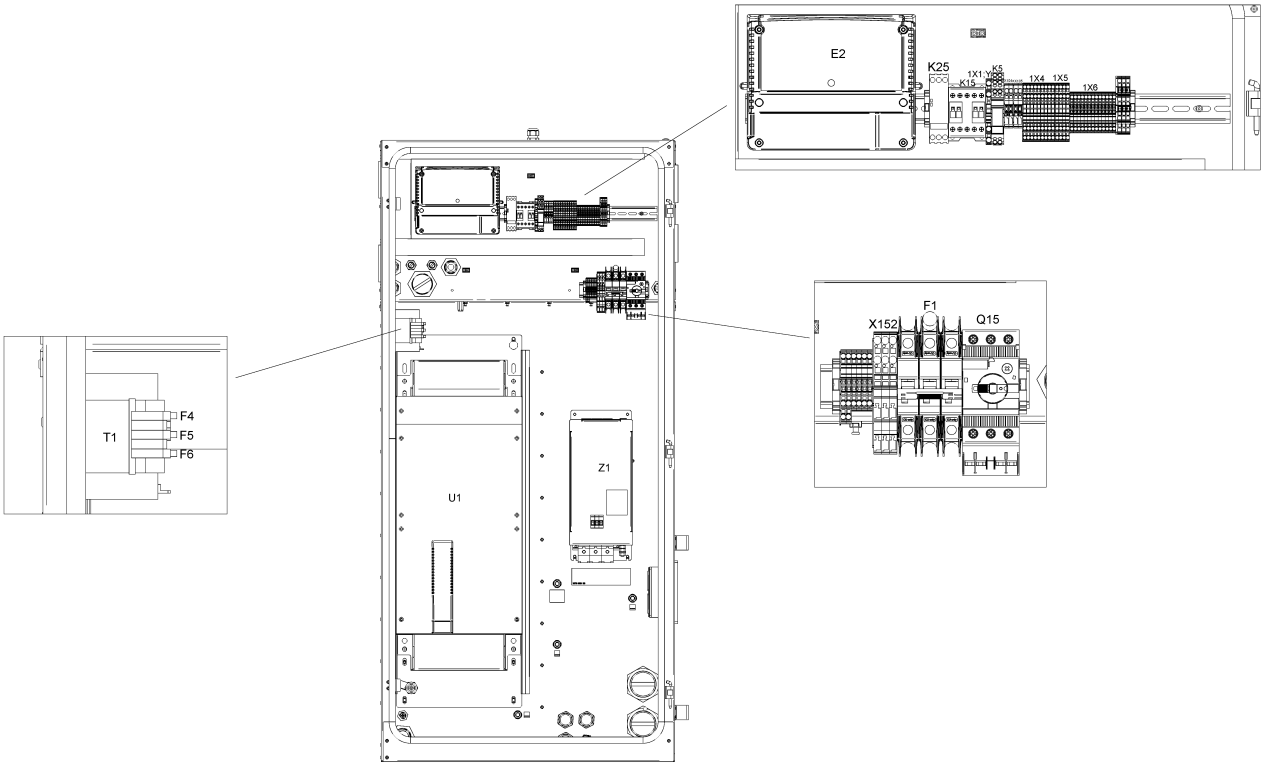

21.6 - Cubicle components GA 75L VSD+ - (200V-400V-500V/50Hz - IEC, 200V-380V-460V/60Hz - IEC, 230V-460V-575V/60Hz - UL-cUL) - Pack (12/12/2018 - 27/11/2019)

((((CAPPRM:AS1210 , CAPPRM:CE , CAPPRM:MHLW , CAPPRM:MOM) + MOVOL:400V , CAPPRM:CE + COOL:AIR + MOVOL:500V) + FREQ:50HZ , ((MOVOL:380V , MOVOL:460V) + CAPPRM:ASME , CAPPRM:MHLW + MOVOL:460V) + FREQ:60HZ , CAPPRM:MHLW + COOL:AIR + MOVOL:200V) + CAPPRE:IEC , ((MOVOL:230V , MOVOL:575V) + COOL:AIR , MOVOL:460V) + CAPPRE:ULCUL + CAPPRM:ASME + FREQ:60HZ) + IDRY:N + MODEL:GA75VP_16

Ref	Part Number	Qty	Name	Validity	EL
	1649 8002 73	1	WIRE HARNESS	**(12/12/2018 - 24/02/2019)** ((((CAPPRM:AS1210 , CAPPRM:CE , CAPPRM:MHLW , CAPPRM:MOM) + MOVOL:400V , (CAPPRM:CE + MOVOL:500V , CAPPRM:MHLW + MOVOL:200V) + COOL:AIR) + FREQ:50HZ , ((COOL:AIR + MOVOL:200V , MOVOL:460V) + CAPPRM:MHLW , (MOVOL:380V , MOVOL:460V) + CAPPRM:ASME) + FREQ:60HZ) + CAPPRE:IEC , ((MOVOL:230V , MOVOL:575V) + COOL:AIR , MOVOL:460V) + CAPPRE:ULCUL + CAPPRM:ASME + FREQ:60HZ) **(25/02/2019 - 27/11/2019)** ((((CAPPRM:AS1210 , CAPPRM:CE , CAPPRM:MHLW , CAPPRM:MOM) + MOVOL:400V , CAPPRM:CE + MOVOL:500V , CAPPRM:MHLW + MOVOL:200V) + FREQ:50HZ , ((MOVOL:200V , MOVOL:460V) + CAPPRM:MHLW , (MOVOL:380V , MOVOL:460V) + CAPPRM:ASME) + FREQ:60HZ) + CAPPRE:IEC , (MOVOL:230V , MOVOL:460V , MOVOL:575V) + CAPPRE:ULCUL + CAPPRM:ASME + FREQ:60HZ) + COOL:AIR	
	Electrical legend:	Pack Drain + Air filter switch			
	1649 8002 75	1	WIRE HARNESS	**(12/12/2018 - 24/02/2019)** ((((CAPPRM:AS1210 , CAPPRM:CE , CAPPRM:MHLW , CAPPRM:MOM) + MOVOL:400V , (CAPPRM:CE + MOVOL:500V , CAPPRM:MHLW + MOVOL:200V) + COOL:AIR) + FREQ:50HZ , ((COOL:AIR + MOVOL:200V , MOVOL:460V) + CAPPRM:MHLW , (MOVOL:380V , MOVOL:460V) + CAPPRM:ASME) + FREQ:60HZ) + CAPPRE:IEC , ((MOVOL:230V , MOVOL:575V) + COOL:AIR , MOVOL:460V) + CAPPRE:ULCUL + CAPPRM:ASME + FREQ:60HZ) **(25/02/2019 - 27/11/2019)** ((((CAPPRM:AS1210 , CAPPRM:CE , CAPPRM:MHLW , CAPPRM:MOM) + MOVOL:400V , CAPPRM:CE + MOVOL:500V , CAPPRM:MHLW + MOVOL:200V) + FREQ:50HZ , ((MOVOL:200V , MOVOL:460V) + CAPPRM:MHLW , (MOVOL:380V , MOVOL:460V) + CAPPRM:ASME) + FREQ:60HZ) + CAPPRE:IEC , (MOVOL:230V , MOVOL:460V , MOVOL:575V) + CAPPRE:ULCUL + CAPPRM:ASME + FREQ:60HZ) + COOL:AIR	
	Electrical legend:	Relative Humidity sensor			
	1649 8001 45	3	MOTOR CABLE	**(12/12/2018 - 24/02/2019)** ((((CAPPRM:AS1210 , CAPPRM:CE , CAPPRM:MHLW , CAPPRM:MOM) + MOVOL:400V , (CAPPRM:CE + MOVOL:500V , CAPPRM:MHLW + MOVOL:200V) + COOL:AIR) + FREQ:50HZ , ((COOL:AIR + MOVOL:200V , MOVOL:460V) + CAPPRM:MHLW , (MOVOL:380V , MOVOL:460V) + CAPPRM:ASME) + FREQ:60HZ) + CAPPRE:IEC , ((MOVOL:230V , MOVOL:575V) + COOL:AIR , MOVOL:460V) + CAPPRE:ULCUL + CAPPRM:ASME + FREQ:60HZ) **(25/02/2019 - 27/11/2019)** ((((CAPPRM:AS1210 , CAPPRM:CE , CAPPRM:MHLW , CAPPRM:MOM) + MOVOL:400V , CAPPRM:CE + MOVOL:500V , CAPPRM:MHLW + MOVOL:200V) + FREQ:50HZ , ((MOVOL:200V , MOVOL:460V) + CAPPRM:MHLW , (MOVOL:380V , MOVOL:460V) + CAPPRM:ASME) + FREQ:60HZ) + CAPPRE:IEC , (MOVOL:230V , MOVOL:460V , MOVOL:575V) + CAPPRE:ULCUL + CAPPRM:ASME + FREQ:60HZ) + COOL:AIR	
	Electrical legend:	Motor conduit			

Legend:

CAPPRE:IEC - Component approval electrical:IEC
CAPPRM:ASME - Component approval mechanical:ASME
CAPPRM:MOM - Component approval mechanical:MOM
FREQ:60HZ - Frequency:60 Hz
MOVOL:200V - Supply voltage:200 V
MOVOL:400V - Supply voltage:400 V
MOVOL:575V - Supply voltage:575 V
CAPPRE:ULCUL - Component approval electrical:UL/cUL
CAPPRM:CE - Component approval mechanical:CE
COOL:AIR - Cooling:Air cooled
IDRY:N - Integrated dryer:No
MOVOL:230V - Supply voltage:230 V
MOVOL:460V - Supply voltage:460 V
CAPPRM:AS1210 - Component approval mechanical:AS1210
CAPPRM:MHLW - Component approval mechanical:MHLW
FREQ:50HZ - Frequency:50 Hz
MODEL:GA75VP_16 - Model:GA 75VSD+
MOVOL:380V - Supply voltage:380 V
MOVOL:500V - Supply voltage:500 V

21.6 - Cubicle components GA 75L VSD+ - (200V-400V-500V/50Hz - IEC, 200V-380V-460V/60Hz - IEC, 230V-460V-575V/60Hz - UL-cUL) - Pack (12/12/2018 - 27/11/2019)

((((CAPPRM:AS1210 , CAPPRM:CE , CAPPRM:MHLW , CAPPRM:MOM) + MOVOL:400V , CAPPRM:CE + COOL:AIR + MOVOL:500V) + FREQ:50HZ , ((MOVOL:380V , MOVOL:460V) + CAPPRM:ASME , CAPPRM:MHLW + MOVOL:460V) + FREQ:60HZ , CAPPRM:MHLW + COOL:AIR + MOVOL:200V) + CAPPRE:IEC , ((MOVOL:230V , MOVOL:575V) + COOL:AIR , MOVOL:460V) + CAPPRE:ULCUL + CAPPRM:ASME + FREQ:60HZ) + IDRY:N + MODEL:GA75VP_16

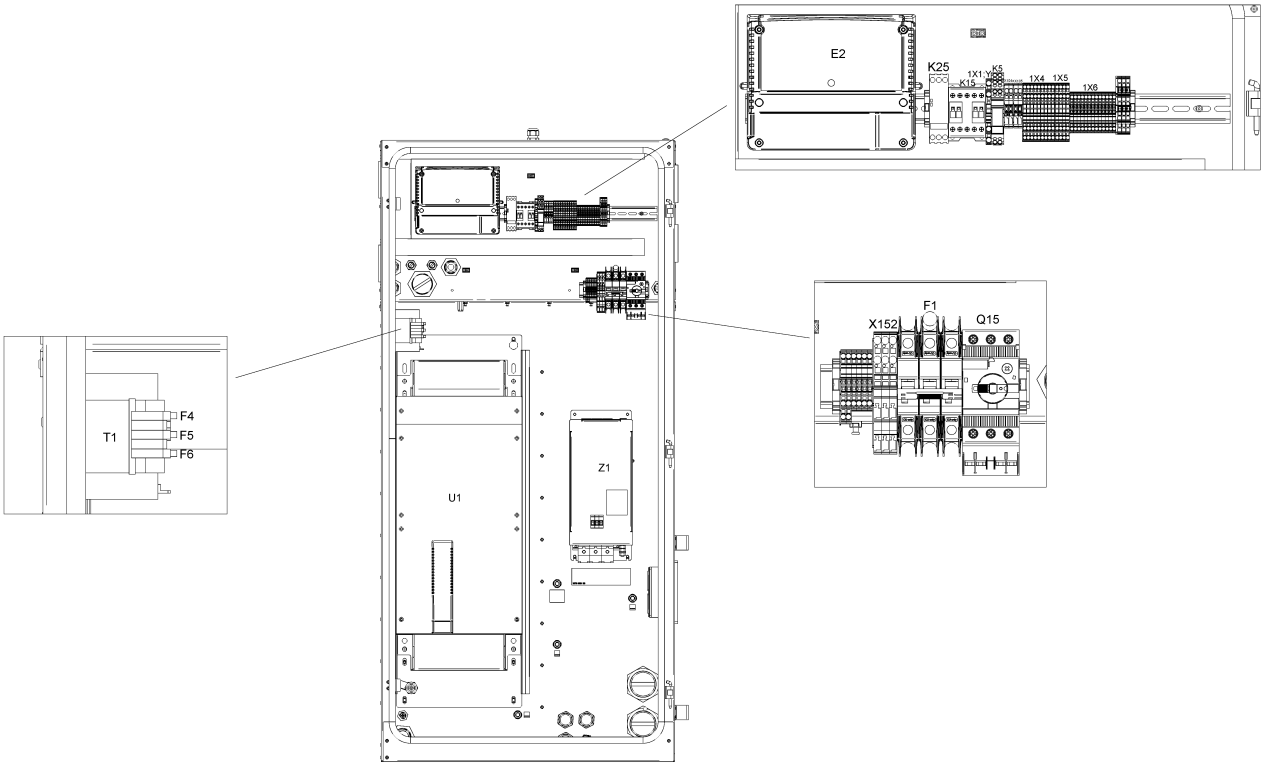

21.6 - Cubicle components GA 75L VSD+ - (200V-400V-500V/50Hz - IEC, 200V-380V-460V/60Hz - IEC, 230V-460V-575V/60Hz - UL-cUL) - Pack (12/12/2018 - 27/11/2019)

((((CAPPRM:AS1210 , CAPPRM:CE , CAPPRM:MHLW , CAPPRM:MOM) + MOVOL:400V , CAPPRM:CE + COOL:AIR + MOVOL:500V) + FREQ:50HZ , ((MOVOL:380V , MOVOL:460V) + CAPPRM:ASME , CAPPRM:MHLW + MOVOL:460V) + FREQ:60HZ , CAPPRM:MHLW + COOL:AIR + MOVOL:200V) + CAPPRE:IEC , ((MOVOL:230V , MOVOL:575V) + COOL:AIR , MOVOL:460V) + CAPPRE:ULCUL + CAPPRM:ASME + FREQ:60HZ) + IDRY:N + MODEL:GA75VP_16

Ref	Part Number	Qty	Name	Validity	EL
	1649 8001 48	1	MOTOR CABLE	**(12/12/2018 - 24/02/2019)** ((((CAPPRM:AS1210 , CAPPRM:CE , CAPPRM:MHLW , CAPPRM:MOM) + MOVOL:400V , (CAPPRM:CE + MOVOL:500V , CAPPRM:MHLW + MOVOL:200V) + COOL:AIR) + FREQ:50HZ , ((COOL:AIR + MOVOL:200V , MOVOL:460V) + CAPPRM:MHLW , (MOVOL:380V , MOVOL:460V) + CAPPRM:ASME) + FREQ:60HZ) + CAPPRE:IEC , ((MOVOL:230V , MOVOL:575V) + COOL:AIR , MOVOL:460V) + CAPPRE:ULCUL + CAPPRM:ASME + FREQ:60HZ) **(25/02/2019 - 27/11/2019)** ((((CAPPRM:AS1210 , CAPPRM:CE , CAPPRM:MHLW , CAPPRM:MOM) + MOVOL:400V , CAPPRM:CE + MOVOL:500V , CAPPRM:MHLW + MOVOL:200V) + FREQ:50HZ , ((MOVOL:200V , MOVOL:460V) + CAPPRM:MHLW , (MOVOL:380V , MOVOL:460V) + CAPPRM:ASME) + FREQ:60HZ) + CAPPRE:IEC , (MOVOL:230V , MOVOL:460V , MOVOL:575V) + CAPPRE:ULCUL + CAPPRM:ASME + FREQ:60HZ) + COOL:AIR	
	Electrical legend:	Motor conduit			
		1	DATALABEL	**(12/12/2018 - 24/02/2019)** ((((CAPPRM:AS1210 , CAPPRM:CE , CAPPRM:MHLW , CAPPRM:MOM) + MOVOL:400V , (CAPPRM:CE + MOVOL:500V , CAPPRM:MHLW + MOVOL:200V) + COOL:AIR) + FREQ:50HZ , ((COOL:AIR + MOVOL:200V , MOVOL:460V) + CAPPRM:MHLW , (MOVOL:380V , MOVOL:460V) + CAPPRM:ASME) + FREQ:60HZ) + CAPPRE:IEC , ((MOVOL:230V , MOVOL:575V) + COOL:AIR , MOVOL:460V) + CAPPRE:ULCUL + CAPPRM:ASME + FREQ:60HZ) **(25/02/2019 - 27/11/2019)** ((((CAPPRM:AS1210 , CAPPRM:CE , CAPPRM:MHLW , CAPPRM:MOM) + MOVOL:400V , CAPPRM:CE + MOVOL:500V , CAPPRM:MHLW + MOVOL:200V) + FREQ:50HZ , ((MOVOL:200V , MOVOL:460V) + CAPPRM:MHLW , (MOVOL:380V , MOVOL:460V) + CAPPRM:ASME) + FREQ:60HZ) + CAPPRE:IEC , (MOVOL:230V , MOVOL:460V , MOVOL:575V) + CAPPRE:ULCUL + CAPPRM:ASME + FREQ:60HZ) + COOL:AIR	Label
	1079 9901 68	1	WARNING LABEL	**(12/12/2018 - 24/02/2019)** ((((CAPPRM:AS1210 , CAPPRM:CE , CAPPRM:MHLW , CAPPRM:MOM) + MOVOL:400V , (CAPPRM:CE + MOVOL:500V , CAPPRM:MHLW + MOVOL:200V) + COOL:AIR) + FREQ:50HZ , ((COOL:AIR + MOVOL:200V , MOVOL:460V) + CAPPRM:MHLW , (MOVOL:380V , MOVOL:460V) + CAPPRM:ASME) + FREQ:60HZ) + CAPPRE:IEC , ((MOVOL:230V , MOVOL:575V) + COOL:AIR , MOVOL:460V) + CAPPRE:ULCUL + CAPPRM:ASME + FREQ:60HZ) **(25/02/2019 - 27/11/2019)** ((((CAPPRM:AS1210 , CAPPRM:CE , CAPPRM:MHLW , CAPPRM:MOM) + MOVOL:400V , CAPPRM:CE + MOVOL:500V , CAPPRM:MHLW + MOVOL:200V) + FREQ:50HZ , ((MOVOL:200V , MOVOL:460V) + CAPPRM:MHLW , (MOVOL:380V , MOVOL:460V) + CAPPRM:ASME) + FREQ:60HZ) + CAPPRE:IEC , (MOVOL:230V , MOVOL:460V , MOVOL:575V) + CAPPRE:ULCUL + CAPPRM:ASME + FREQ:60HZ) + COOL:AIR	Label

Legend:

CAPPRE:IEC - Component approval electrical:IEC
CAPPRE:ULCUL - Component approval electrical:UL/cUL
CAPPRM:AS1210 - Component approval mechanical:AS1210
CAPPRM:ASME - Component approval mechanical:ASME
CAPPRM:CE - Component approval mechanical:CE
CAPPRM:MHLW - Component approval mechanical:MHLW
CAPPRM:MOM - Component approval mechanical:MOM
COOL:AIR - Cooling:Air cooled
FREQ:50HZ - Frequency:50 Hz
FREQ:60HZ - Frequency:60 Hz
IDRY:N - Integrated dryer:No
MODEL:GA75VP_16 - Model:GA 75VSD+
MOVOL:200V - Supply voltage:200 V
MOVOL:230V - Supply voltage:230 V
MOVOL:380V - Supply voltage:380 V
MOVOL:400V - Supply voltage:400 V
MOVOL:460V - Supply voltage:460 V
MOVOL:500V - Supply voltage:500 V
MOVOL:575V - Supply voltage:575 V

21.6 - Cubicle components GA 75L VSD+ - (200V-400V-500V/50Hz - IEC, 200V-380V-460V/60Hz - IEC, 230V-460V-575V/60Hz - UL-cUL) - Pack (12/12/2018 - 27/11/2019)

((((CAPPRM:AS1210 , CAPPRM:CE , CAPPRM:MHLW , CAPPRM:MOM) + MOVOL:400V , CAPPRM:CE + COOL:AIR + MOVOL:500V) + FREQ:50HZ , ((MOVOL:380V , MOVOL:460V) + CAPPRM:ASME , CAPPRM:MHLW + MOVOL:460V) + FREQ:60HZ , CAPPRM:MHLW + COOL:AIR + MOVOL:200V) + CAPPRE:IEC , ((MOVOL:230V , MOVOL:575V) + COOL:AIR , MOVOL:460V) + CAPPRE:ULCUL + CAPPRM:ASME + FREQ:60HZ) + IDRY:N + MODEL:GA75VP_16

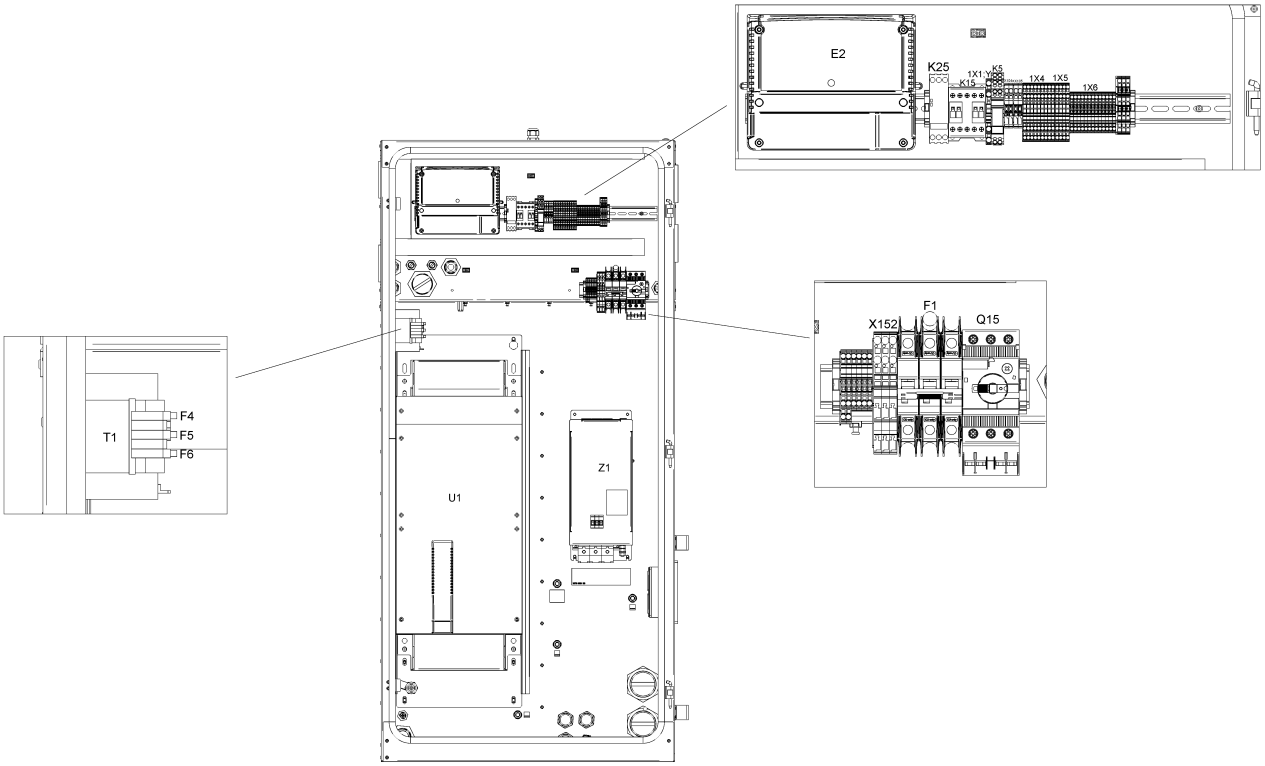

21.6 - Cubicle components GA 75L VSD+ - (200V-400V-500V/50Hz - IEC, 200V-380V-460V/60Hz - IEC, 230V-460V-575V/60Hz - UL-cUL) - Pack (12/12/2018 - 27/11/2019)

((((CAPPRM:AS1210 , CAPPRM:CE , CAPPRM:MHLW , CAPPRM:MOM) + MOVOL:400V , CAPPRM:CE + COOL:AIR + MOVOL:500V) + FREQ:50HZ , ((MOVOL:380V , MOVOL:460V) + CAPPRM:ASME , CAPPRM:MHLW + MOVOL:460V) + FREQ:60HZ , CAPPRM:MHLW + COOL:AIR + MOVOL:200V) + CAPPRE:IEC , ((MOVOL:230V , MOVOL:575V) + COOL:AIR , MOVOL:460V) + CAPPRE:ULCUL + CAPPRM:ASME + FREQ:60HZ) + IDRY:N + MODEL:GA75VP_16

Ref	Part Number	Qty	Name	Validity	EL
	1900 5350 15	1	INVERTER	**(12/12/2018 - 24/02/2019)** ((((CAPPRM:AS1210 , CAPPRM:CE , CAPPRM:MHLW , CAPPRM:MOM) + MOVOL:400V , (CAPPRM:CE + MOVOL:500V , CAPPRM:MHLW + MOVOL:200V) + COOL:AIR) + FREQ:50HZ , ((COOL:AIR + MOVOL:200V , MOVOL:460V) + CAPPRM:MHLW , (MOVOL:380V , MOVOL:460V) + CAPPRM:ASME) + FREQ:60HZ) + CAPPRE:IEC , ((MOVOL:230V , MOVOL:575V) + COOL:AIR , MOVOL:460V) + CAPPRE:ULCUL + CAPPRM:ASME + FREQ:60HZ) **(25/02/2019 - 27/11/2019)** ((((CAPPRM:AS1210 , CAPPRM:CE , CAPPRM:MHLW , CAPPRM:MOM) + MOVOL:400V , CAPPRM:CE + MOVOL:500V , CAPPRM:MHLW + MOVOL:200V) + FREQ:50HZ , ((MOVOL:200V , MOVOL:460V) + CAPPRM:MHLW , (MOVOL:380V , MOVOL:460V) + CAPPRM:ASME) + FREQ:60HZ) + CAPPRE:IEC , (MOVOL:230V , MOVOL:460V , MOVOL:575V) + CAPPRE:ULCUL + CAPPRM:ASME + FREQ:60HZ) + COOL:AIR	U1
	1631 2079 00	1	NANOPERMRING	**(12/12/2018 - 24/02/2019)** ((((CAPPRM:AS1210 , CAPPRM:CE , CAPPRM:MHLW , CAPPRM:MOM) + MOVOL:400V , (CAPPRM:CE + MOVOL:500V , CAPPRM:MHLW + MOVOL:200V) + COOL:AIR) + FREQ:50HZ , ((COOL:AIR + MOVOL:200V , MOVOL:460V) + CAPPRM:MHLW , (MOVOL:380V , MOVOL:460V) + CAPPRM:ASME) + FREQ:60HZ) + CAPPRE:IEC , ((MOVOL:230V , MOVOL:575V) + COOL:AIR , MOVOL:460V) + CAPPRE:ULCUL + CAPPRM:ASME + FREQ:60HZ) **(25/02/2019 - 27/11/2019)** ((((CAPPRM:AS1210 , CAPPRM:CE , CAPPRM:MHLW , CAPPRM:MOM) + MOVOL:400V , CAPPRM:CE + MOVOL:500V , CAPPRM:MHLW + MOVOL:200V) + FREQ:50HZ , ((MOVOL:200V , MOVOL:460V) + CAPPRM:MHLW , (MOVOL:380V , MOVOL:460V) + CAPPRM:ASME) + FREQ:60HZ) + CAPPRE:IEC , (MOVOL:230V , MOVOL:460V , MOVOL:575V) + CAPPRE:ULCUL + CAPPRM:ASME + FREQ:60HZ) + COOL:AIR	
	Electrical legend:	Nanoperm ring			
	0697 9811 17	2	PLUG	**(12/12/2018 - 24/02/2019)** ((((CAPPRM:AS1210 , CAPPRM:CE , CAPPRM:MHLW , CAPPRM:MOM) + MOVOL:400V , (CAPPRM:CE + MOVOL:500V , CAPPRM:MHLW + MOVOL:200V) + COOL:AIR) + FREQ:50HZ , ((COOL:AIR + MOVOL:200V , MOVOL:460V) + CAPPRM:MHLW , (MOVOL:380V , MOVOL:460V) + CAPPRM:ASME) + FREQ:60HZ) + CAPPRE:IEC , ((MOVOL:230V , MOVOL:575V) + COOL:AIR , MOVOL:460V) + CAPPRE:ULCUL + CAPPRM:ASME + FREQ:60HZ) **(25/02/2019 - 27/11/2019)** ((((CAPPRM:AS1210 , CAPPRM:CE , CAPPRM:MHLW , CAPPRM:MOM) + MOVOL:400V , CAPPRM:CE + MOVOL:500V , CAPPRM:MHLW + MOVOL:200V) + FREQ:50HZ , ((MOVOL:200V , MOVOL:460V) + CAPPRM:MHLW , (MOVOL:380V , MOVOL:460V) + CAPPRM:ASME) + FREQ:60HZ) + CAPPRE:IEC , (MOVOL:230V , MOVOL:460V , MOVOL:575V) + CAPPRE:ULCUL + CAPPRM:ASME + FREQ:60HZ) + COOL:AIR	
	Electrical legend:	Plug for transfo supply			

Legend:

CAPPRE:IEC - Component approval electrical:IEC
CAPPRE:ULCUL - Component approval electrical:UL/cUL
CAPPRM:AS1210 - Component approval mechanical:AS1210
CAPPRM:ASME - Component approval mechanical:ASME
CAPPRM:CE - Component approval mechanical:CE
CAPPRM:MHLW - Component approval mechanical:MHLW
CAPPRM:MOM - Component approval mechanical:MOM
COOL:AIR - Cooling:Air cooled
FREQ:50HZ - Frequency:50 Hz
FREQ:60HZ - Frequency:60 Hz
IDRY:N - Integrated dryer:No
MODEL:GA75VP_16 - Model:GA 75VSD+
MOVOL:200V - Supply voltage:200 V
MOVOL:230V - Supply voltage:230 V
MOVOL:380V - Supply voltage:380 V
MOVOL:400V - Supply voltage:400 V
MOVOL:460V - Supply voltage:460 V
MOVOL:500V - Supply voltage:500 V
MOVOL:575V - Supply voltage:575 V

21.6 - Cubicle components GA 75L VSD+ - (200V-400V-500V/50Hz - IEC, 200V-380V-460V/60Hz - IEC, 230V-460V-575V/60Hz - UL-cUL) - Pack (12/12/2018 - 27/11/2019)

((((CAPPRM:AS1210 , CAPPRM:CE , CAPPRM:MHLW , CAPPRM:MOM) + MOVOL:400V , CAPPRM:CE + COOL:AIR + MOVOL:500V) + FREQ:50HZ , ((MOVOL:380V , MOVOL:460V) + CAPPRM:ASME , CAPPRM:MHLW + MOVOL:460V) + FREQ:60HZ , CAPPRM:MHLW + COOL:AIR + MOVOL:200V) + CAPPRE:IEC , ((MOVOL:230V , MOVOL:575V) + COOL:AIR , MOVOL:460V) + CAPPRE:ULCUL + CAPPRM:ASME + FREQ:60HZ) + IDRY:N + MODEL:GA75VP_16

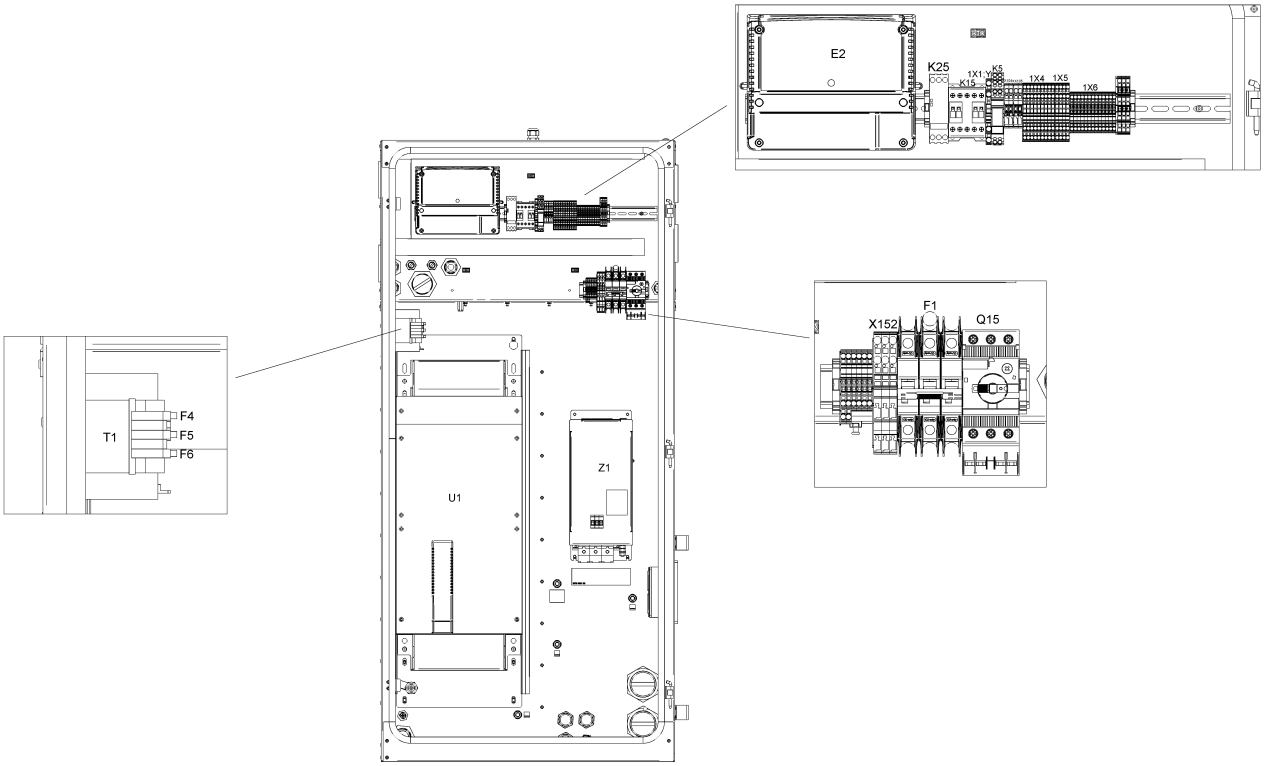

Ref	Part Number	Qty	Name	Validity	EL
	0989 3700 48	2	NUT	**(12/12/2018 - 24/02/2019)** ((((CAPPRM:AS1210 , CAPPRM:CE , CAPPRM:MHLW , CAPPRM:MOM) + MOVOL:400V , (CAPPRM:CE + MOVOL:500V , CAPPRM:MHLW + MOVOL:200V) + COOL:AIR) + FREQ:50HZ , ((COOL:AIR + MOVOL:200V , MOVOL:460V) + CAPPRM:MHLW , (MOVOL:380V , MOVOL:460V) + CAPPRM:ASME) + FREQ:60HZ) + CAPPRE:IEC , ((MOVOL:230V , MOVOL:575V) + COOL:AIR , MOVOL:460V) + CAPPRE:ULCUL + CAPPRM:ASME + FREQ:60HZ) **(25/02/2019 - 27/11/2019)** ((((CAPPRM:AS1210 , CAPPRM:CE , CAPPRM:MHLW , CAPPRM:MOM) + MOVOL:400V , CAPPRM:CE + MOVOL:500V , CAPPRM:MHLW + MOVOL:200V) + FREQ:50HZ , ((MOVOL:200V , MOVOL:460V) + CAPPRM:MHLW , (MOVOL:380V , MOVOL:460V) + CAPPRM:ASME) + FREQ:60HZ) + CAPPRE:IEC , (MOVOL:230V , MOVOL:460V , MOVOL:575V) + CAPPRE:ULCUL + CAPPRM:ASME + FREQ:60HZ) + COOL:AIR	
	Electrical legend:	Nut for transfo supply			
	0698 5140 72	1	CABLE GLAND	**(12/12/2018 - 24/02/2019)** ((((CAPPRM:AS1210 , CAPPRM:CE , CAPPRM:MHLW , CAPPRM:MOM) + MOVOL:400V , (CAPPRM:CE + MOVOL:500V , CAPPRM:MHLW + MOVOL:200V) + COOL:AIR) + FREQ:50HZ , ((COOL:AIR + MOVOL:200V , MOVOL:460V) + CAPPRM:MHLW , (MOVOL:380V , MOVOL:460V) + CAPPRM:ASME) + FREQ:60HZ) + CAPPRE:IEC , ((MOVOL:230V , MOVOL:575V) + COOL:AIR , MOVOL:460V) + CAPPRE:ULCUL + CAPPRM:ASME + FREQ:60HZ) **(25/02/2019 - 27/11/2019)** ((((CAPPRM:AS1210 , CAPPRM:CE , CAPPRM:MHLW , CAPPRM:MOM) + MOVOL:400V , CAPPRM:CE + MOVOL:500V , CAPPRM:MHLW + MOVOL:200V) + FREQ:50HZ , ((MOVOL:200V , MOVOL:460V) + CAPPRM:MHLW , (MOVOL:380V , MOVOL:460V) + CAPPRM:ASME) + FREQ:60HZ) + CAPPRE:IEC , (MOVOL:230V , MOVOL:460V , MOVOL:575V) + CAPPRE:ULCUL + CAPPRM:ASME + FREQ:60HZ) + COOL:AIR	Fan
	0698 5140 71	1	CABLE GLAND	**(12/12/2018 - 24/02/2019)** ((((CAPPRM:AS1210 , CAPPRM:CE , CAPPRM:MHLW , CAPPRM:MOM) + MOVOL:400V , (CAPPRM:CE + MOVOL:500V , CAPPRM:MHLW + MOVOL:200V) + COOL:AIR) + FREQ:50HZ , ((COOL:AIR + MOVOL:200V , MOVOL:460V) + CAPPRM:MHLW , (MOVOL:380V , MOVOL:460V) + CAPPRM:ASME) + FREQ:60HZ) + CAPPRE:IEC , ((MOVOL:230V , MOVOL:575V) + COOL:AIR , MOVOL:460V) + CAPPRE:ULCUL + CAPPRM:ASME + FREQ:60HZ) **(25/02/2019 - 27/11/2019)** ((((CAPPRM:AS1210 , CAPPRM:CE , CAPPRM:MHLW , CAPPRM:MOM) + MOVOL:400V , CAPPRM:CE + MOVOL:500V , CAPPRM:MHLW + MOVOL:200V) + FREQ:50HZ , ((MOVOL:200V , MOVOL:460V) + CAPPRM:MHLW , (MOVOL:380V , MOVOL:460V) + CAPPRM:ASME) + FREQ:60HZ) + CAPPRE:IEC , (MOVOL:230V , MOVOL:460V , MOVOL:575V) + CAPPRE:ULCUL + CAPPRM:ASME + FREQ:60HZ) + COOL:AIR	
	Electrical legend:	Ambient sensor			

Legend:

CAPPRE:IEC - Component approval electrical:IEC
CAPPRM:ASME - Component approval mechanical:ASME
CAPPRM:MOM - Component approval mechanical:MOM
FREQ:60HZ - Frequency:60 Hz
MOVOL:200V - Supply voltage:200 V
MOVOL:400V - Supply voltage:400 V
MOVOL:575V - Supply voltage:575 V
CAPPRE:ULCUL - Component approval electrical:UL/cUL
CAPPRM:CE - Component approval mechanical:CE
COOL:AIR - Cooling:Air cooled
IDRY:N - Integrated dryer:No
MOVOL:230V - Supply voltage:230 V
MOVOL:460V - Supply voltage:460 V
CAPPRM:AS1210 - Component approval mechanical:AS1210
CAPPRM:MHLW - Component approval mechanical:MHLW
FREQ:50HZ - Frequency:50 Hz
MODEL:GA75VP_16 - Model:GA 75VSD+
MOVOL:380V - Supply voltage:380 V
MOVOL:500V - Supply voltage:500 V

21.6 - Cubicle components GA 75L VSD+ - (200V-400V-500V/50Hz - IEC, 200V-380V-460V/60Hz - IEC, 230V-460V-575V/60Hz - UL-cUL) - Pack (12/12/2018 - 27/11/2019)

((((CAPPRM:AS1210 , CAPPRM:CE , CAPPRM:MHLW , CAPPRM:MOM) + MOVOL:400V , CAPPRM:CE + COOL:AIR + MOVOL:500V) + FREQ:50HZ , ((MOVOL:380V , MOVOL:460V) + CAPPRM:ASME , CAPPRM:MHLW + MOVOL:460V) + FREQ:60HZ , CAPPRM:MHLW + COOL:AIR + MOVOL:200V) + CAPPRE:IEC , ((MOVOL:230V , MOVOL:575V) + COOL:AIR , MOVOL:460V) + CAPPRE:ULCUL + CAPPRM:ASME + FREQ:60HZ) + IDRY:N + MODEL:GA75VP_16

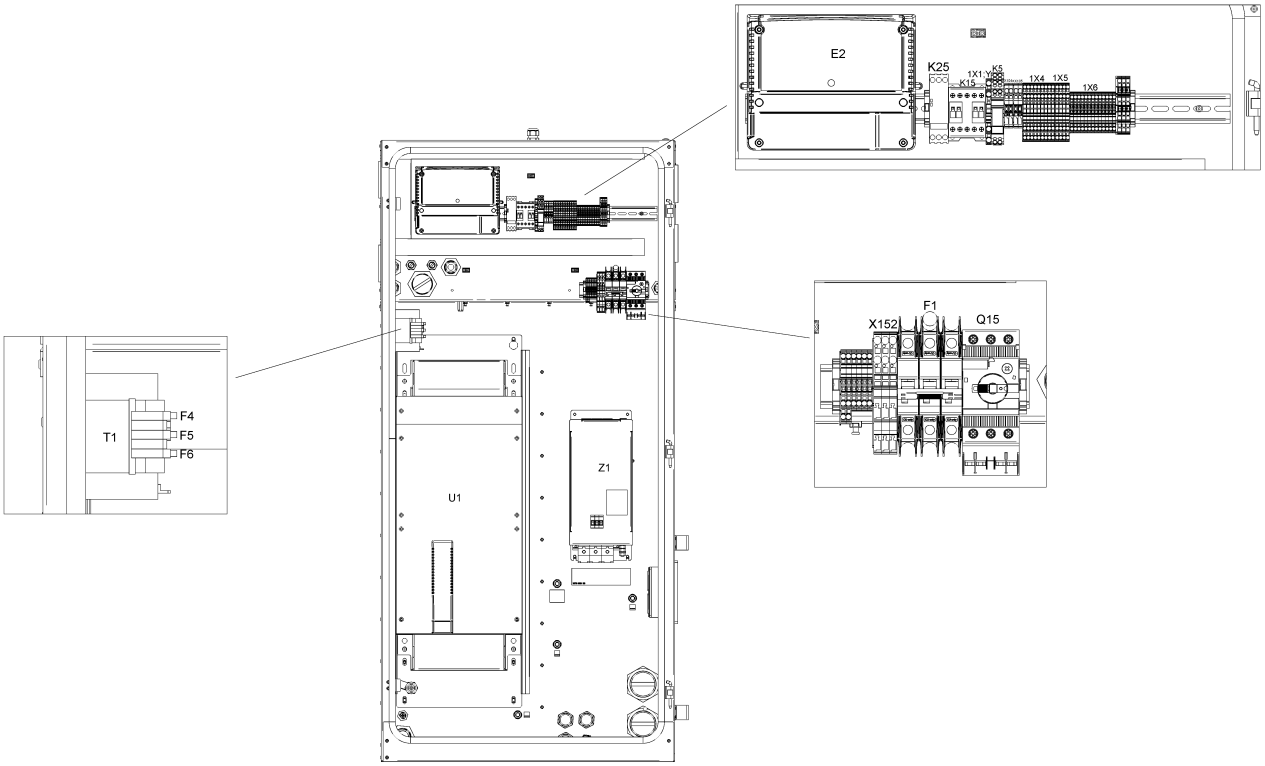

21.6 - Cubicle components GA 75L VSD+ - (200V-400V-500V/50Hz - IEC, 200V-380V-460V/60Hz - IEC, 230V-460V-575V/60Hz - UL-cUL) - Pack (12/12/2018 - 27/11/2019)

((((CAPPRM:AS1210 , CAPPRM:CE , CAPPRM:MHLW , CAPPRM:MOM) + MOVOL:400V , CAPPRM:CE + COOL:AIR + MOVOL:500V) + FREQ:50HZ , ((MOVOL:380V , MOVOL:460V) + CAPPRM:ASME , CAPPRM:MHLW + MOVOL:460V) + FREQ:60HZ , CAPPRM:MHLW + COOL:AIR + MOVOL:200V) + CAPPRE:IEC , ((MOVOL:230V , MOVOL:575V) + COOL:AIR , MOVOL:460V) + CAPPRE:ULCUL + CAPPRM:ASME + FREQ:60HZ) + IDRY:N + MODEL:GA75VP_16

Ref	Part Number	Qty	Name	Validity	EL
	0697 9809 20	1	LOCKNUT	**(12/12/2018 - 24/02/2019)** ((((CAPPRM:AS1210 , CAPPRM:CE , CAPPRM:MHLW , CAPPRM:MOM) + MOVOL:400V , (CAPPRM:CE + MOVOL:500V , CAPPRM:MHLW + MOVOL:200V) + COOL:AIR) + FREQ:50HZ , ((COOL:AIR + MOVOL:200V , MOVOL:460V) + CAPPRM:MHLW , (MOVOL:380V , MOVOL:460V) + CAPPRM:ASME) + FREQ:60HZ) + CAPPRE:IEC , ((MOVOL:230V , MOVOL:575V) + COOL:AIR , MOVOL:460V) + CAPPRE:ULCUL + CAPPRM:ASME + FREQ:60HZ) **(25/02/2019 - 27/11/2019)** ((((CAPPRM:AS1210 , CAPPRM:CE , CAPPRM:MHLW , CAPPRM:MOM) + MOVOL:400V , CAPPRM:CE + MOVOL:500V , CAPPRM:MHLW + MOVOL:200V) + FREQ:50HZ , ((MOVOL:200V , MOVOL:460V) + CAPPRM:MHLW , (MOVOL:380V , MOVOL:460V) + CAPPRM:ASME) + FREQ:60HZ) + CAPPRE:IEC , (MOVOL:230V , MOVOL:460V , MOVOL:575V) + CAPPRE:ULCUL + CAPPRM:ASME + FREQ:60HZ) + COOL:AIR	
	Electrical legend:	Ambient sensor			
	1089 9556 44	1	FAN WITH FILTER	**(12/12/2018 - 24/02/2019)** ((((CAPPRM:AS1210 , CAPPRM:CE , CAPPRM:MHLW , CAPPRM:MOM) + MOVOL:400V , (CAPPRM:CE + MOVOL:500V , CAPPRM:MHLW + MOVOL:200V) + COOL:AIR) + FREQ:50HZ , ((COOL:AIR + MOVOL:200V , MOVOL:460V) + CAPPRM:MHLW , (MOVOL:380V , MOVOL:460V) + CAPPRM:ASME) + FREQ:60HZ) + CAPPRE:IEC , ((MOVOL:230V , MOVOL:575V) + COOL:AIR , MOVOL:460V) + CAPPRE:ULCUL + CAPPRM:ASME + FREQ:60HZ) **(25/02/2019 - 27/11/2019)** ((((CAPPRM:AS1210 , CAPPRM:CE , CAPPRM:MHLW , CAPPRM:MOM) + MOVOL:400V , CAPPRM:CE + MOVOL:500V , CAPPRM:MHLW + MOVOL:200V) + FREQ:50HZ , ((MOVOL:200V , MOVOL:460V) + CAPPRM:MHLW , (MOVOL:380V , MOVOL:460V) + CAPPRM:ASME) + FREQ:60HZ) + CAPPRE:IEC , (MOVOL:230V , MOVOL:460V , MOVOL:575V) + CAPPRE:ULCUL + CAPPRM:ASME + FREQ:60HZ) + COOL:AIR	Cubicle fan
	1089 9556 72	4	AIR INLET WITHOUT FILTER	**(12/12/2018 - 24/02/2019)** ((((CAPPRM:AS1210 , CAPPRM:CE , CAPPRM:MHLW , CAPPRM:MOM) + MOVOL:400V , (CAPPRM:CE + MOVOL:500V , CAPPRM:MHLW + MOVOL:200V) + COOL:AIR) + FREQ:50HZ , ((COOL:AIR + MOVOL:200V , MOVOL:460V) + CAPPRM:MHLW , (MOVOL:380V , MOVOL:460V) + CAPPRM:ASME) + FREQ:60HZ) + CAPPRE:IEC , ((MOVOL:230V , MOVOL:575V) + COOL:AIR , MOVOL:460V) + CAPPRE:ULCUL + CAPPRM:ASME + FREQ:60HZ) **(25/02/2019 - 27/11/2019)** ((((CAPPRM:AS1210 , CAPPRM:CE , CAPPRM:MHLW , CAPPRM:MOM) + MOVOL:400V , CAPPRM:CE + MOVOL:500V , CAPPRM:MHLW + MOVOL:200V) + FREQ:50HZ , ((MOVOL:200V , MOVOL:460V) + CAPPRM:MHLW , (MOVOL:380V , MOVOL:460V) + CAPPRM:ASME) + FREQ:60HZ) + CAPPRE:IEC , (MOVOL:230V , MOVOL:460V , MOVOL:575V) + CAPPRE:ULCUL + CAPPRM:ASME + FREQ:60HZ) + COOL:AIR	Filter grid

Legend:

CAPPRE:IEC - Component approval electrical:IEC
CAPPRM:ASME - Component approval mechanical:ASME
CAPPRM:MOM - Component approval mechanical:MOM
FREQ:60HZ - Frequency:60 Hz
MOVOL:200V - Supply voltage:200 V
MOVOL:400V - Supply voltage:400 V
MOVOL:575V - Supply voltage:575 V
CAPPRE:ULCUL - Component approval electrical:UL/cUL
CAPPRM:CE - Component approval mechanical:CE
COOL:AIR - Cooling:Air cooled
IDRY:N - Integrated dryer:No
MOVOL:230V - Supply voltage:230 V
MOVOL:460V - Supply voltage:460 V
CAPPRM:AS1210 - Component approval mechanical:AS1210
CAPPRM:MHLW - Component approval mechanical:MHLW
FREQ:50HZ - Frequency:50 Hz
MODEL:GA75VP_16 - Model:GA 75VSD+
MOVOL:380V - Supply voltage:380 V
MOVOL:500V - Supply voltage:500 V

21.6 - Cubicle components GA 75L VSD+ - (200V-400V-500V/50Hz - IEC, 200V-380V-460V/60Hz - IEC, 230V-460V-575V/60Hz - UL-cUL) - Pack (12/12/2018 - 27/11/2019)

((((CAPPRM:AS1210 , CAPPRM:CE , CAPPRM:MHLW , CAPPRM:MOM) + MOVOL:400V , CAPPRM:CE + COOL:AIR + MOVOL:500V) + FREQ:50HZ , ((MOVOL:380V , MOVOL:460V) + CAPPRM:ASME , CAPPRM:MHLW + MOVOL:460V) + FREQ:60HZ , CAPPRM:MHLW + COOL:AIR + MOVOL:200V) + CAPPRE:IEC , ((MOVOL:230V , MOVOL:575V) + COOL:AIR , MOVOL:460V) + CAPPRE:ULCUL + CAPPRM:ASME + FREQ:60HZ) + IDRY:N + MODEL:GA75VP_16

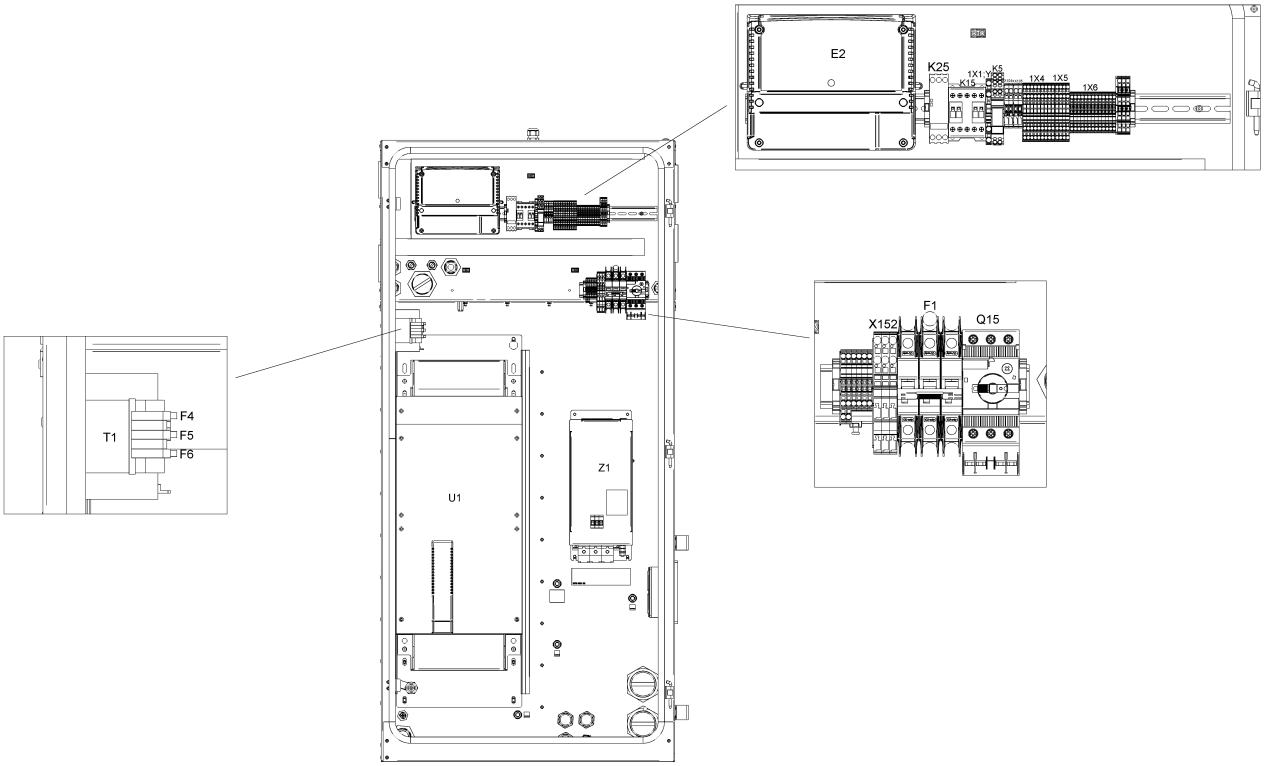

21.6 - Cubicle components GA 75L VSD+ - (200V-400V-500V/50Hz - IEC, 200V-380V-460V/60Hz - IEC, 230V-460V-575V/60Hz - UL-cUL) - Pack (12/12/2018 - 27/11/2019)

((((CAPPRM:AS1210 , CAPPRM:CE , CAPPRM:MHLW , CAPPRM:MOM) + MOVOL:400V , CAPPRM:CE + COOL:AIR + MOVOL:500V) + FREQ:50HZ , ((MOVOL:380V , MOVOL:460V) + CAPPRM:ASME , CAPPRM:MHLW + MOVOL:460V) + FREQ:60HZ , CAPPRM:MHLW + COOL:AIR + MOVOL:200V) + CAPPRE:IEC , ((MOVOL:230V , MOVOL:575V) + COOL:AIR , MOVOL:460V) + CAPPRE:ULCUL + CAPPRM:ASME + FREQ:60HZ) + IDRY:N + MODEL:GA75VP_16

Ref	Part Number	Qty	Name	Validity	EL
	1088 0032 09	1	CONNECTOR	**(12/12/2018 - 24/02/2019)** ((((CAPPRM:AS1210 , CAPPRM:CE , CAPPRM:MHLW , CAPPRM:MOM) + MOVOL:400V , (CAPPRM:CE + MOVOL:500V , CAPPRM:MHLW + MOVOL:200V) + COOL:AIR) + FREQ:50HZ , ((COOL:AIR + MOVOL:200V , MOVOL:460V) + CAPPRM:MHLW , (MOVOL:380V , MOVOL:460V) + CAPPRM:ASME) + FREQ:60HZ) + CAPPRE:IEC , ((MOVOL:230V , MOVOL:575V) + COOL:AIR , MOVOL:460V) + CAPPRE:ULCUL + CAPPRM:ASME + FREQ:60HZ) **(25/02/2019 - 27/11/2019)** ((((CAPPRM:AS1210 , CAPPRM:CE , CAPPRM:MHLW , CAPPRM:MOM) + MOVOL:400V , CAPPRM:CE + MOVOL:500V , CAPPRM:MHLW + MOVOL:200V) + FREQ:50HZ , ((MOVOL:200V , MOVOL:460V) + CAPPRM:MHLW , (MOVOL:380V , MOVOL:460V) + CAPPRM:ASME) + FREQ:60HZ) + CAPPRE:IEC , (MOVOL:230V , MOVOL:460V , MOVOL:575V) + CAPPRE:ULCUL + CAPPRM:ASME + FREQ:60HZ) + COOL:AIR	X3
	1089 9572 05	1	LINE FILTER	**(12/12/2018 - 24/02/2019)** ((((CAPPRM:AS1210 , CAPPRM:CE , CAPPRM:MHLW , CAPPRM:MOM) + MOVOL:400V , (CAPPRM:CE + MOVOL:500V , CAPPRM:MHLW + MOVOL:200V) + COOL:AIR) + FREQ:50HZ , ((COOL:AIR + MOVOL:200V , MOVOL:460V) + CAPPRM:MHLW , (MOVOL:380V , MOVOL:460V) + CAPPRM:ASME) + FREQ:60HZ) + CAPPRE:IEC , ((MOVOL:230V , MOVOL:575V) + COOL:AIR , MOVOL:460V) + CAPPRE:ULCUL + CAPPRM:ASME + FREQ:60HZ) **(25/02/2019 - 27/11/2019)** ((((CAPPRM:AS1210 , CAPPRM:CE , CAPPRM:MHLW , CAPPRM:MOM) + MOVOL:400V , CAPPRM:CE + MOVOL:500V , CAPPRM:MHLW + MOVOL:200V) + FREQ:50HZ , ((MOVOL:200V , MOVOL:460V) + CAPPRM:MHLW , (MOVOL:380V , MOVOL:460V) + CAPPRM:ASME) + FREQ:60HZ) + CAPPRE:IEC , (MOVOL:230V , MOVOL:460V , MOVOL:575V) + CAPPRE:ULCUL + CAPPRM:ASME + FREQ:60HZ) + COOL:AIR	Z1 for 75 kw
	Electrical legend:	Z1 for 75 kw			
	1089 9562 04	1	STRAP	**(12/12/2018 - 24/02/2019)** ((((CAPPRM:AS1210 , CAPPRM:CE , CAPPRM:MHLW , CAPPRM:MOM) + MOVOL:400V , (CAPPRM:CE + MOVOL:500V , CAPPRM:MHLW + MOVOL:200V) + COOL:AIR) + FREQ:50HZ , ((COOL:AIR + MOVOL:200V , MOVOL:460V) + CAPPRM:MHLW , (MOVOL:380V , MOVOL:460V) + CAPPRM:ASME) + FREQ:60HZ) + CAPPRE:IEC , ((MOVOL:230V , MOVOL:575V) + COOL:AIR , MOVOL:460V) + CAPPRE:ULCUL + CAPPRM:ASME + FREQ:60HZ) **(25/02/2019 - 27/11/2019)** ((((CAPPRM:AS1210 , CAPPRM:CE , CAPPRM:MHLW , CAPPRM:MOM) + MOVOL:400V , CAPPRM:CE + MOVOL:500V , CAPPRM:MHLW + MOVOL:200V) + FREQ:50HZ , ((MOVOL:200V , MOVOL:460V) + CAPPRM:MHLW , (MOVOL:380V , MOVOL:460V) + CAPPRM:ASME) + FREQ:60HZ) + CAPPRE:IEC , (MOVOL:230V , MOVOL:460V , MOVOL:575V) + CAPPRE:ULCUL + CAPPRM:ASME + FREQ:60HZ) + COOL:AIR	HF-screen

Legend:

CAPPRE:IEC - Component approval electrical:IEC
CAPPRM:ASME - Component approval mechanical:ASME
CAPPRM:MOM - Component approval mechanical:MOM
FREQ:60HZ - Frequency:60 Hz
MOVOL:200V - Supply voltage:200 V
MOVOL:400V - Supply voltage:400 V
MOVOL:575V - Supply voltage:575 V
CAPPRE:ULCUL - Component approval electrical:UL/cUL
CAPPRM:CE - Component approval mechanical:CE
COOL:AIR - Cooling:Air cooled
IDRY:N - Integrated dryer:No
MOVOL:230V - Supply voltage:230 V
MOVOL:460V - Supply voltage:460 V
CAPPRM:AS1210 - Component approval mechanical:AS1210
CAPPRM:MHLW - Component approval mechanical:MHLW
FREQ:50HZ - Frequency:50 Hz
MODEL:GA75VP_16 - Model:GA 75VSD+
MOVOL:380V - Supply voltage:380 V
MOVOL:500V - Supply voltage:500 V

21.6 - Cubicle components GA 75L VSD+ - (200V-400V-500V/50Hz - IEC, 200V-380V-460V/60Hz - IEC, 230V-460V-575V/60Hz - UL-cUL) - Pack (12/12/2018 - 27/11/2019)

((((CAPPRM:AS1210 , CAPPRM:CE , CAPPRM:MHLW , CAPPRM:MOM) + MOVOL:400V , CAPPRM:CE + COOL:AIR + MOVOL:500V) + FREQ:50HZ , ((MOVOL:380V , MOVOL:460V) + CAPPRM:ASME , CAPPRM:MHLW + MOVOL:460V) + FREQ:60HZ , CAPPRM:MHLW + COOL:AIR + MOVOL:200V) + CAPPRE:IEC , ((MOVOL:230V , MOVOL:575V) + COOL:AIR , MOVOL:460V) + CAPPRE:ULCUL + CAPPRM:ASME + FREQ:60HZ) + IDRY:N + MODEL:GA75VP_16

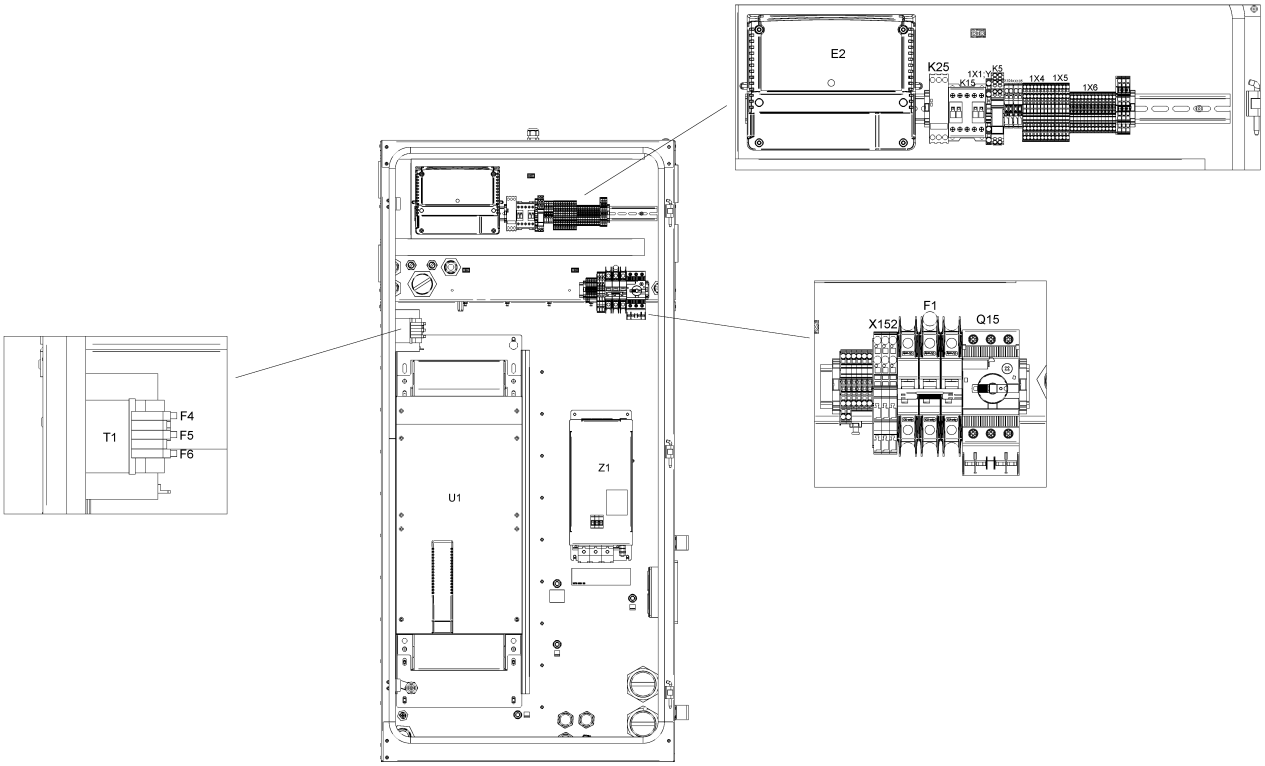

21.6 - Cubicle components GA 75L VSD+ - (200V-400V-500V/50Hz - IEC, 200V-380V-460V/60Hz - IEC, 230V-460V-575V/60Hz - UL-cUL) - Pack (12/12/2018 - 27/11/2019)

((((CAPPRM:AS1210 , CAPPRM:CE , CAPPRM:MHLW , CAPPRM:MOM) + MOVOL:400V , CAPPRM:CE + COOL:AIR + MOVOL:500V) + FREQ:50HZ , ((MOVOL:380V , MOVOL:460V) + CAPPRM:ASME , CAPPRM:MHLW + MOVOL:460V) + FREQ:60HZ , CAPPRM:MHLW + COOL:AIR + MOVOL:200V) + CAPPRE:IEC , ((MOVOL:230V , MOVOL:575V) + COOL:AIR , MOVOL:460V) + CAPPRE:ULCUL + CAPPRM:ASME + FREQ:60HZ) + IDRY:N + MODEL:GA75VP_16

Ref	Part Number	Qty	Name	Validity	EL
	1089 9514 56	1	TRANSFORMER	**(12/12/2018 - 24/02/2019)** ((((CAPPRM:AS1210 , CAPPRM:CE , CAPPRM:MHLW , CAPPRM:MOM) + MOVOL:400V , (CAPPRM:CE + MOVOL:500V , CAPPRM:MHLW + MOVOL:200V) + COOL:AIR) + FREQ:50HZ , ((COOL:AIR + MOVOL:200V , MOVOL:460V) + CAPPRM:MHLW , (MOVOL:380V , MOVOL:460V) + CAPPRM:ASME) + FREQ:60HZ) + CAPPRE:IEC , ((MOVOL:230V , MOVOL:575V) + COOL:AIR , MOVOL:460V) + CAPPRE:ULCUL + CAPPRM:ASME + FREQ:60HZ) **(25/02/2019 - 27/11/2019)** ((((CAPPRM:AS1210 , CAPPRM:CE , CAPPRM:MHLW , CAPPRM:MOM) + MOVOL:400V , CAPPRM:CE + MOVOL:500V , CAPPRM:MHLW + MOVOL:200V) + FREQ:50HZ , ((MOVOL:200V , MOVOL:460V) + CAPPRM:MHLW , (MOVOL:380V , MOVOL:460V) + CAPPRM:ASME) + FREQ:60HZ) + CAPPRE:IEC , (MOVOL:230V , MOVOL:460V , MOVOL:575V) + CAPPRE:ULCUL + CAPPRM:ASME + FREQ:60HZ) + COOL:AIR	T1
	1089 9522 26	1	CIRCUIT BREAKER	**(12/12/2018 - 24/02/2019)** ((((CAPPRM:AS1210 , CAPPRM:CE , CAPPRM:MHLW , CAPPRM:MOM) + MOVOL:400V , (CAPPRM:CE + MOVOL:500V , CAPPRM:MHLW + MOVOL:200V) + COOL:AIR) + FREQ:50HZ , ((COOL:AIR + MOVOL:200V , MOVOL:460V) + CAPPRM:MHLW , (MOVOL:380V , MOVOL:460V) + CAPPRM:ASME) + FREQ:60HZ) + CAPPRE:IEC , ((MOVOL:230V , MOVOL:575V) + COOL:AIR , MOVOL:460V) + CAPPRE:ULCUL + CAPPRM:ASME + FREQ:60HZ) **(25/02/2019 - 27/11/2019)** ((((CAPPRM:AS1210 , CAPPRM:CE , CAPPRM:MHLW , CAPPRM:MOM) + MOVOL:400V , CAPPRM:CE + MOVOL:500V , CAPPRM:MHLW + MOVOL:200V) + FREQ:50HZ , ((MOVOL:200V , MOVOL:460V) + CAPPRM:MHLW , (MOVOL:380V , MOVOL:460V) + CAPPRM:ASME) + FREQ:60HZ) + CAPPRE:IEC , (MOVOL:230V , MOVOL:460V , MOVOL:575V) + CAPPRE:ULCUL + CAPPRM:ASME + FREQ:60HZ) + COOL:AIR	F1
	1089 9513 41	1	PUSH BUTTON	**(12/12/2018 - 24/02/2019)** ((((CAPPRM:AS1210 , CAPPRM:CE , CAPPRM:MHLW , CAPPRM:MOM) + MOVOL:400V , (CAPPRM:CE + MOVOL:500V , CAPPRM:MHLW + MOVOL:200V) + COOL:AIR) + FREQ:50HZ , ((COOL:AIR + MOVOL:200V , MOVOL:460V) + CAPPRM:MHLW , (MOVOL:380V , MOVOL:460V) + CAPPRM:ASME) + FREQ:60HZ) + CAPPRE:IEC , ((MOVOL:230V , MOVOL:575V) + COOL:AIR , MOVOL:460V) + CAPPRE:ULCUL + CAPPRM:ASME + FREQ:60HZ) **(25/02/2019 - 27/11/2019)** ((((CAPPRM:AS1210 , CAPPRM:CE , CAPPRM:MHLW , CAPPRM:MOM) + MOVOL:400V , CAPPRM:CE + MOVOL:500V , CAPPRM:MHLW + MOVOL:200V) + FREQ:50HZ , ((MOVOL:200V , MOVOL:460V) + CAPPRM:MHLW , (MOVOL:380V , MOVOL:460V) + CAPPRM:ASME) + FREQ:60HZ) + CAPPRE:IEC , (MOVOL:230V , MOVOL:460V , MOVOL:575V) + CAPPRE:ULCUL + CAPPRM:ASME + FREQ:60HZ) + COOL:AIR	S3

Legend:

CAPPRE:IEC - Component approval electrical:IEC
CAPPRE:ULCUL - Component approval electrical:UL/cUL
CAPPRM:AS1210 - Component approval mechanical:AS1210
CAPPRM:ASME - Component approval mechanical:ASME
CAPPRM:CE - Component approval mechanical:CE
CAPPRM:MHLW - Component approval mechanical:MHLW
CAPPRM:MOM - Component approval mechanical:MOM
COOL:AIR - Cooling:Air cooled
FREQ:50HZ - Frequency:50 Hz
FREQ:60HZ - Frequency:60 Hz
IDRY:N - Integrated dryer:No
MODEL:GA75VP_16 - Model:GA 75VSD+
MOVOL:200V - Supply voltage:200 V
MOVOL:230V - Supply voltage:230 V
MOVOL:380V - Supply voltage:380 V
MOVOL:400V - Supply voltage:400 V
MOVOL:460V - Supply voltage:460 V
MOVOL:500V - Supply voltage:500 V
MOVOL:575V - Supply voltage:575 V

21.6 - Cubicle components GA 75L VSD+ - (200V-400V-500V/50Hz - IEC, 200V-380V-460V/60Hz - IEC, 230V-460V-575V/60Hz - UL-cUL) - Pack (12/12/2018 - 27/11/2019)

((((CAPPRM:AS1210 , CAPPRM:CE , CAPPRM:MHLW , CAPPRM:MOM) + MOVOL:400V , CAPPRM:CE + COOL:AIR + MOVOL:500V) + FREQ:50HZ , ((MOVOL:380V , MOVOL:460V) + CAPPRM:ASME , CAPPRM:MHLW + MOVOL:460V) + FREQ:60HZ , CAPPRM:MHLW + COOL:AIR + MOVOL:200V) + CAPPRE:IEC , ((MOVOL:230V , MOVOL:575V) + COOL:AIR , MOVOL:460V) + CAPPRE:ULCUL + CAPPRM:ASME + FREQ:60HZ) + IDRY:N + MODEL:GA75VP_16

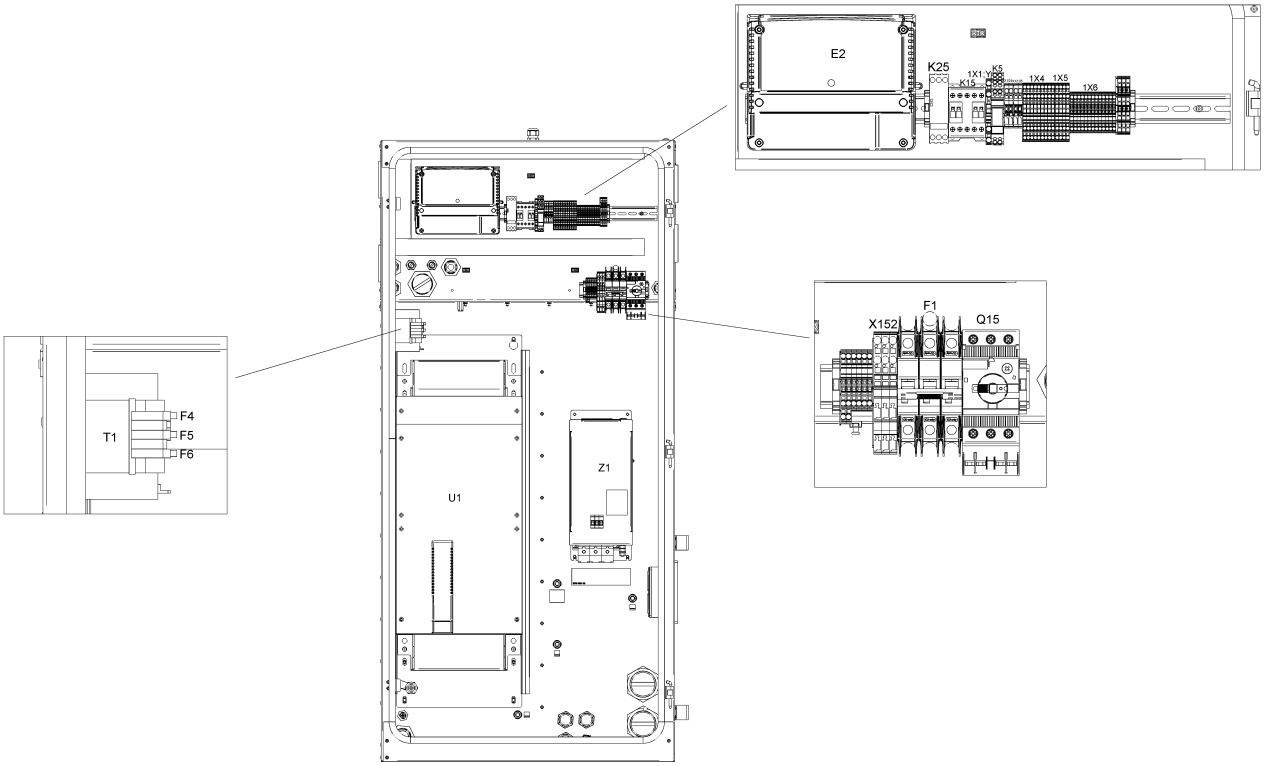

21.6 - Cubicle components GA 75L VSD+ - (200V-400V-500V/50Hz - IEC, 200V-380V-460V/60Hz - IEC, 230V-460V-575V/60Hz - UL-cUL) - Pack (12/12/2018 - 27/11/2019)

((((CAPPRM:AS1210 , CAPPRM:CE , CAPPRM:MHLW , CAPPRM:MOM) + MOVOL:400V , CAPPRM:CE + COOL:AIR + MOVOL:500V) + FREQ:50HZ , ((MOVOL:380V , MOVOL:460V) + CAPPRM:ASME , CAPPRM:MHLW + MOVOL:460V) + FREQ:60HZ , CAPPRM:MHLW + COOL:AIR + MOVOL:200V) + CAPPRE:IEC , ((MOVOL:230V , MOVOL:575V) + COOL:AIR , MOVOL:460V) + CAPPRE:ULCUL + CAPPRM:ASME + FREQ:60HZ) + IDRY:N + MODEL:GA75VP_16

Ref	Part Number	Qty	Name	Validity	EL
	1089 9513 28	1	HOLDER	**(12/12/2018 - 24/02/2019)** ((((CAPPRM:AS1210 , CAPPRM:CE , CAPPRM:MHLW , CAPPRM:MOM) + MOVOL:400V , (CAPPRM:CE + MOVOL:500V , CAPPRM:MHLW + MOVOL:200V) + COOL:AIR) + FREQ:50HZ , ((COOL:AIR + MOVOL:200V , MOVOL:460V) + CAPPRM:MHLW , (MOVOL:380V , MOVOL:460V) + CAPPRM:ASME) + FREQ:60HZ) + CAPPRE:IEC , ((MOVOL:230V , MOVOL:575V) + COOL:AIR , MOVOL:460V) + CAPPRE:ULCUL + CAPPRM:ASME + FREQ:60HZ) **(25/02/2019 - 27/11/2019)** ((((CAPPRM:AS1210 , CAPPRM:CE , CAPPRM:MHLW , CAPPRM:MOM) + MOVOL:400V , CAPPRM:CE + MOVOL:500V , CAPPRM:MHLW + MOVOL:200V) + FREQ:50HZ , ((MOVOL:200V , MOVOL:460V) + CAPPRM:MHLW , (MOVOL:380V , MOVOL:460V) + CAPPRM:ASME) + FREQ:60HZ) + CAPPRE:IEC , (MOVOL:230V , MOVOL:460V , MOVOL:575V) + CAPPRE:ULCUL + CAPPRM:ASME + FREQ:60HZ) + COOL:AIR	S3
	~~1089 9513 30~~	4	CONTACTOR	**(12/12/2018 - 24/02/2019)** ((((CAPPRM:AS1210 , CAPPRM:CE , CAPPRM:MHLW , CAPPRM:MOM) + MOVOL:400V , (CAPPRM:CE + MOVOL:500V , CAPPRM:MHLW + MOVOL:200V) + COOL:AIR) + FREQ:50HZ , ((COOL:AIR + MOVOL:200V , MOVOL:460V) + CAPPRM:MHLW , (MOVOL:380V , MOVOL:460V) + CAPPRM:ASME) + FREQ:60HZ) + CAPPRE:IEC , ((MOVOL:230V , MOVOL:575V) + COOL:AIR , MOVOL:460V) + CAPPRE:ULCUL + CAPPRM:ASME + FREQ:60HZ) **(25/02/2019 - 27/11/2019)** ((((CAPPRM:AS1210 , CAPPRM:CE , CAPPRM:MHLW , CAPPRM:MOM) + MOVOL:400V , CAPPRM:CE + MOVOL:500V , CAPPRM:MHLW + MOVOL:200V) + FREQ:50HZ , ((MOVOL:200V , MOVOL:460V) + CAPPRM:MHLW , (MOVOL:380V , MOVOL:460V) + CAPPRM:ASME) + FREQ:60HZ) + CAPPRE:IEC , (MOVOL:230V , MOVOL:460V , MOVOL:575V) + CAPPRE:ULCUL + CAPPRM:ASME + FREQ:60HZ) + COOL:AIR	S3
	Substituted by:	1089 9513 04 - CONTACT BLOCK (quantity: 1)			
	1088 0031 02	1	CONNECTOR 2-POLE	**(12/12/2018 - 17/02/2019)** ((((CAPPRM:AS1210 , CAPPRM:CE , CAPPRM:MHLW , CAPPRM:MOM) + MOVOL:400V , (CAPPRM:CE + MOVOL:500V , CAPPRM:MHLW + MOVOL:200V) + COOL:AIR) + FREQ:50HZ , ((COOL:AIR + MOVOL:200V , MOVOL:460V) + CAPPRM:MHLW , (MOVOL:380V , MOVOL:460V) + CAPPRM:ASME) + FREQ:60HZ) + CAPPRE:IEC , ((MOVOL:230V , MOVOL:575V) + COOL:AIR , MOVOL:460V) + CAPPRE:ULCUL + CAPPRM:ASME + FREQ:60HZ)	

Legend:

CAPPRE:IEC - Component approval electrical:IEC
CAPPRE:ULCUL - Component approval electrical:UL/cUL
CAPPRM:AS1210 - Component approval mechanical:AS1210
CAPPRM:ASME - Component approval mechanical:ASME
CAPPRM:CE - Component approval mechanical:CE
CAPPRM:MHLW - Component approval mechanical:MHLW
CAPPRM:MOM - Component approval mechanical:MOM
COOL:AIR - Cooling:Air cooled
FREQ:50HZ - Frequency:50 Hz
FREQ:60HZ - Frequency:60 Hz
IDRY:N - Integrated dryer:No
MODEL:GA75VP_16 - Model:GA 75VSD+
MOVOL:200V - Supply voltage:200 V
MOVOL:230V - Supply voltage:230 V
MOVOL:380V - Supply voltage:380 V
MOVOL:400V - Supply voltage:400 V
MOVOL:460V - Supply voltage:460 V
MOVOL:500V - Supply voltage:500 V
MOVOL:575V - Supply voltage:575 V

21.6 - Cubicle components GA 75L VSD+ - (200V-400V-500V/50Hz - IEC, 200V-380V-460V/60Hz - IEC, 230V-460V-575V/60Hz - UL-cUL) - Pack (12/12/2018 - 27/11/2019)

((((CAPPRM:AS1210 , CAPPRM:CE , CAPPRM:MHLW , CAPPRM:MOM) + MOVOL:400V , CAPPRM:CE + COOL:AIR + MOVOL:500V) + FREQ:50HZ , ((MOVOL:380V , MOVOL:460V) + CAPPRM:ASME , CAPPRM:MHLW + MOVOL:460V) + FREQ:60HZ , CAPPRM:MHLW + COOL:AIR + MOVOL:200V) + CAPPRE:IEC , ((MOVOL:230V , MOVOL:575V) + COOL:AIR , MOVOL:460V) + CAPPRE:ULCUL + CAPPRM:ASME + FREQ:60HZ) + IDRY:N + MODEL:GA75VP_16

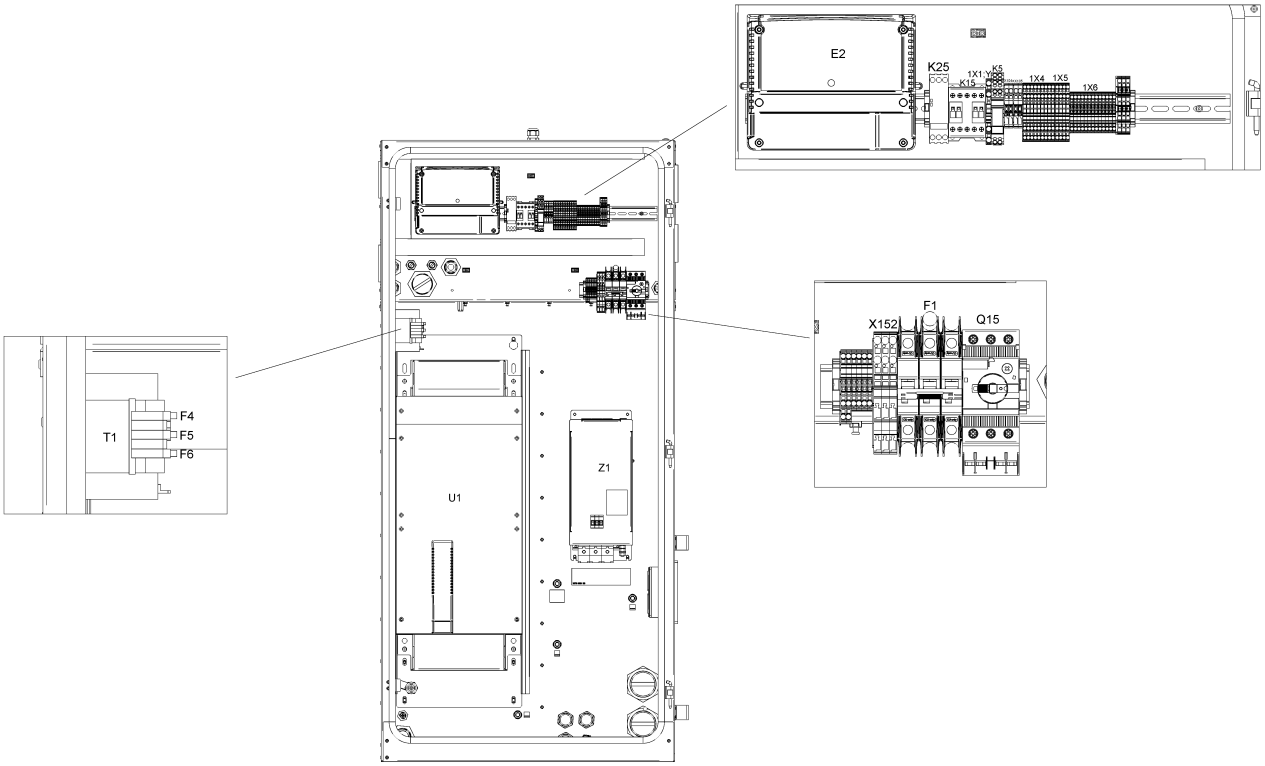

21.6 - Cubicle components GA 75L VSD+ - (200V-400V-500V/50Hz - IEC, 200V-380V-460V/60Hz - IEC, 230V-460V-575V/60Hz - UL-cUL) - Pack (12/12/2018 - 27/11/2019)

((((CAPPRM:AS1210 , CAPPRM:CE , CAPPRM:MHLW , CAPPRM:MOM) + MOVOL:400V , CAPPRM:CE + COOL:AIR + MOVOL:500V) + FREQ:50HZ , ((MOVOL:380V , MOVOL:460V) + CAPPRM:ASME , CAPPRM:MHLW + MOVOL:460V) + FREQ:60HZ , CAPPRM:MHLW + COOL:AIR + MOVOL:200V) + CAPPRE:IEC , ((MOVOL:230V , MOVOL:575V) + COOL:AIR , MOVOL:460V) + CAPPRE:ULCUL + CAPPRM:ASME + FREQ:60HZ) + IDRY:N + MODEL:GA75VP_16

Ref	Part Number	Qty	Name	Validity	EL
	1088 0039 07	3	TERMINAL	**(12/12/2018 - 24/02/2019)** ((((CAPPRM:AS1210 , CAPPRM:CE , CAPPRM:MHLW , CAPPRM:MOM) + MOVOL:400V , (CAPPRM:CE + MOVOL:500V , CAPPRM:MHLW + MOVOL:200V) + COOL:AIR) + FREQ:50HZ , ((COOL:AIR + MOVOL:200V , MOVOL:460V) + CAPPRM:MHLW , (MOVOL:380V , MOVOL:460V) + CAPPRM:ASME) + FREQ:60HZ) + CAPPRE:IEC , ((MOVOL:230V , MOVOL:575V) + COOL:AIR , MOVOL:460V) + CAPPRE:ULCUL + CAPPRM:ASME + FREQ:60HZ) **(25/02/2019 - 27/11/2019)** ((((CAPPRM:AS1210 , CAPPRM:CE , CAPPRM:MHLW , CAPPRM:MOM) + MOVOL:400V , CAPPRM:CE + MOVOL:500V , CAPPRM:MHLW + MOVOL:200V) + FREQ:50HZ , ((MOVOL:200V , MOVOL:460V) + CAPPRM:MHLW , (MOVOL:380V , MOVOL:460V) + CAPPRM:ASME) + FREQ:60HZ) + CAPPRE:IEC , (MOVOL:230V , MOVOL:460V , MOVOL:575V) + CAPPRE:ULCUL + CAPPRM:ASME + FREQ:60HZ) + COOL:AIR	X152
	1088 0039 05	1	PLATE	**(12/12/2018 - 24/02/2019)** ((((CAPPRM:AS1210 , CAPPRM:CE , CAPPRM:MHLW , CAPPRM:MOM) + MOVOL:400V , (CAPPRM:CE + MOVOL:500V , CAPPRM:MHLW + MOVOL:200V) + COOL:AIR) + FREQ:50HZ , ((COOL:AIR + MOVOL:200V , MOVOL:460V) + CAPPRM:MHLW , (MOVOL:380V , MOVOL:460V) + CAPPRM:ASME) + FREQ:60HZ) + CAPPRE:IEC , ((MOVOL:230V , MOVOL:575V) + COOL:AIR , MOVOL:460V) + CAPPRE:ULCUL + CAPPRM:ASME + FREQ:60HZ) **(25/02/2019 - 27/11/2019)** ((((CAPPRM:AS1210 , CAPPRM:CE , CAPPRM:MHLW , CAPPRM:MOM) + MOVOL:400V , CAPPRM:CE + MOVOL:500V , CAPPRM:MHLW + MOVOL:200V) + FREQ:50HZ , ((MOVOL:200V , MOVOL:460V) + CAPPRM:MHLW , (MOVOL:380V , MOVOL:460V) + CAPPRM:ASME) + FREQ:60HZ) + CAPPRE:IEC , (MOVOL:230V , MOVOL:460V , MOVOL:575V) + CAPPRE:ULCUL + CAPPRM:ASME + FREQ:60HZ) + COOL:AIR	X152
	1088 0039 26	1	CONNECTOR	**(12/12/2018 - 24/02/2019)** ((((CAPPRM:AS1210 , CAPPRM:CE , CAPPRM:MHLW , CAPPRM:MOM) + MOVOL:400V , (CAPPRM:CE + MOVOL:500V , CAPPRM:MHLW + MOVOL:200V) + COOL:AIR) + FREQ:50HZ , ((COOL:AIR + MOVOL:200V , MOVOL:460V) + CAPPRM:MHLW , (MOVOL:380V , MOVOL:460V) + CAPPRM:ASME) + FREQ:60HZ) + CAPPRE:IEC , ((MOVOL:230V , MOVOL:575V) + COOL:AIR , MOVOL:460V) + CAPPRE:ULCUL + CAPPRM:ASME + FREQ:60HZ) **(25/02/2019 - 27/11/2019)** ((((CAPPRM:AS1210 , CAPPRM:CE , CAPPRM:MHLW , CAPPRM:MOM) + MOVOL:400V , CAPPRM:CE + MOVOL:500V , CAPPRM:MHLW + MOVOL:200V) + FREQ:50HZ , ((MOVOL:200V , MOVOL:460V) + CAPPRM:MHLW , (MOVOL:380V , MOVOL:460V) + CAPPRM:ASME) + FREQ:60HZ) + CAPPRE:IEC , (MOVOL:230V , MOVOL:460V , MOVOL:575V) + CAPPRE:ULCUL + CAPPRM:ASME + FREQ:60HZ) + COOL:AIR	

Electrical legend: X152 (remove coding pin 1,3)

Legend:

CAPPRE:IEC - Component approval electrical:IEC
CAPPRE:ULCUL - Component approval electrical:UL/cUL
CAPPRM:AS1210 - Component approval mechanical:AS1210
CAPPRM:ASME - Component approval mechanical:ASME
CAPPRM:CE - Component approval mechanical:CE
CAPPRM:MHLW - Component approval mechanical:MHLW
CAPPRM:MOM - Component approval mechanical:MOM
COOL:AIR - Cooling:Air cooled
FREQ:50HZ - Frequency:50 Hz
FREQ:60HZ - Frequency:60 Hz
IDRY:N - Integrated dryer:No
MODEL:GA75VP_16 - Model:GA 75VSD+
MOVOL:200V - Supply voltage:200 V
MOVOL:230V - Supply voltage:230 V
MOVOL:380V - Supply voltage:380 V
MOVOL:400V - Supply voltage:400 V
MOVOL:460V - Supply voltage:460 V
MOVOL:500V - Supply voltage:500 V
MOVOL:575V - Supply voltage:575 V

21.6 - Cubicle components GA 75L VSD+ - (200V-400V-500V/50Hz - IEC, 200V-380V-460V/60Hz - IEC, 230V-460V-575V/60Hz - UL-cUL) - Pack (12/12/2018 - 27/11/2019)

((((CAPPRM:AS1210 , CAPPRM:CE , CAPPRM:MHLW , CAPPRM:MOM) + MOVOL:400V , CAPPRM:CE + COOL:AIR + MOVOL:500V) + FREQ:50HZ , ((MOVOL:380V , MOVOL:460V) + CAPPRM:ASME , CAPPRM:MHLW + MOVOL:460V) + FREQ:60HZ , CAPPRM:MHLW + COOL:AIR + MOVOL:200V) + CAPPRE:IEC , ((MOVOL:230V , MOVOL:575V) + COOL:AIR , MOVOL:460V) + CAPPRE:ULCUL + CAPPRM:ASME + FREQ:60HZ) + IDRY:N + MODEL:GA75VP_16

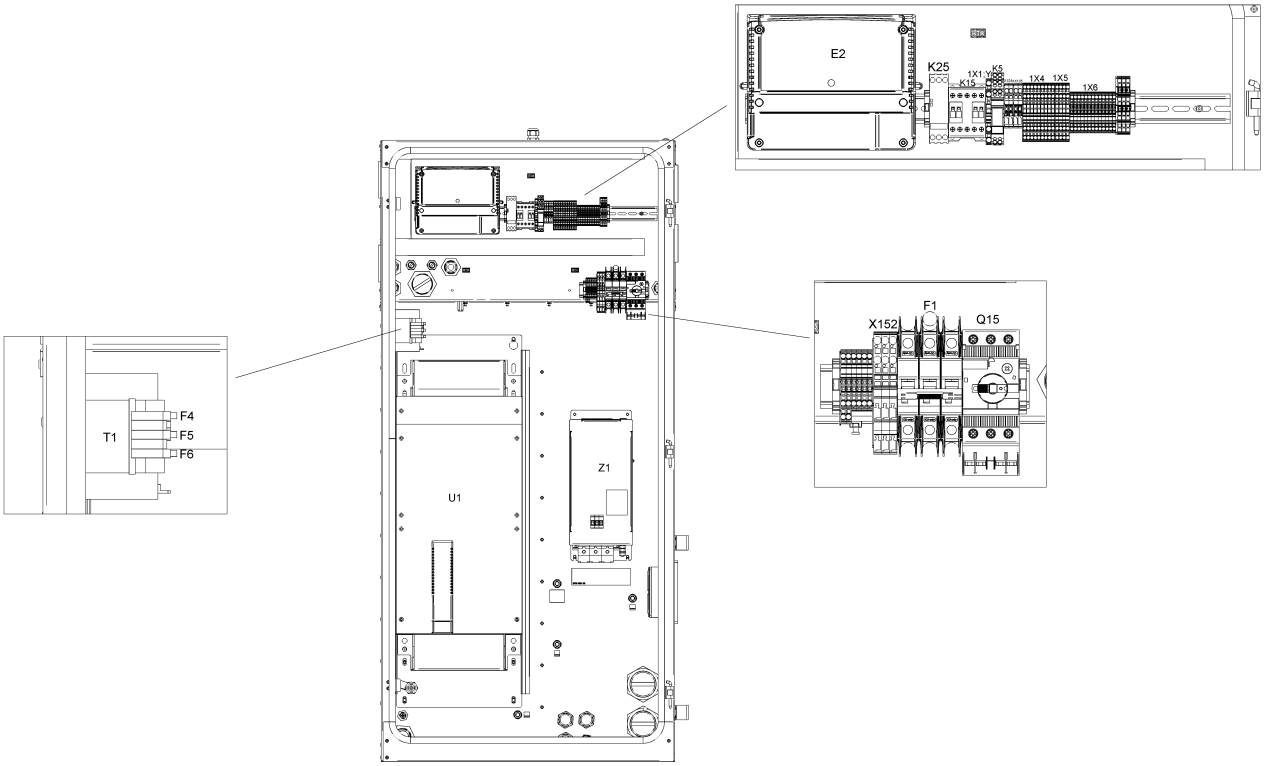

21.6 - Cubicle components GA 75L VSD+ - (200V-400V-500V/50Hz - IEC, 200V-380V-460V/60Hz - IEC, 230V-460V-575V/60Hz - UL-cUL) - Pack (12/12/2018 - 27/11/2019)

((((CAPPRM:AS1210 , CAPPRM:CE , CAPPRM:MHLW , CAPPRM:MOM) + MOVOL:400V , CAPPRM:CE + COOL:AIR + MOVOL:500V) + FREQ:50HZ , ((MOVOL:380V , MOVOL:460V) + CAPPRM:ASME , CAPPRM:MHLW + MOVOL:460V) + FREQ:60HZ , CAPPRM:MHLW + COOL:AIR + MOVOL:200V) + CAPPRE:IEC , ((MOVOL:230V , MOVOL:575V) + COOL:AIR , MOVOL:460V) + CAPPRE:ULCUL + CAPPRM:ASME + FREQ:60HZ) + IDRY:N + MODEL:GA75VP_16

Ref	Part Number	Qty	Name	Validity	EL
	1088 0037 99	4	PIN	**(12/12/2018 - 24/02/2019)** ((((CAPPRM:AS1210 , CAPPRM:CE , CAPPRM:MHLW , CAPPRM:MOM) + MOVOL:400V , (CAPPRM:CE + MOVOL:500V , CAPPRM:MHLW + MOVOL:200V) + COOL:AIR) + FREQ:50HZ , ((COOL:AIR + MOVOL:200V , MOVOL:460V) + CAPPRM:MHLW , (MOVOL:380V , MOVOL:460V) + CAPPRM:ASME) + FREQ:60HZ) + CAPPRE:IEC , ((MOVOL:230V , MOVOL:575V) + COOL:AIR , MOVOL:460V) + CAPPRE:ULCUL + CAPPRM:ASME + FREQ:60HZ) **(25/02/2019 - 27/11/2019)** ((((CAPPRM:AS1210 , CAPPRM:CE , CAPPRM:MHLW , CAPPRM:MOM) + MOVOL:400V , CAPPRM:CE + MOVOL:500V , CAPPRM:MHLW + MOVOL:200V) + FREQ:50HZ , ((MOVOL:200V , MOVOL:460V) + CAPPRM:MHLW , (MOVOL:380V , MOVOL:460V) + CAPPRM:ASME) + FREQ:60HZ) + CAPPRE:IEC , (MOVOL:230V , MOVOL:460V , MOVOL:575V) + CAPPRE:ULCUL + CAPPRM:ASME + FREQ:60HZ) + COOL:AIR	X152:1; 3
	~~1088 0031 81~~	7	END STOP BRACKET 6MM	**(12/12/2018 - 24/02/2019)** ((((CAPPRM:AS1210 , CAPPRM:CE , CAPPRM:MHLW , CAPPRM:MOM) + MOVOL:400V , (CAPPRM:CE + MOVOL:500V , CAPPRM:MHLW + MOVOL:200V) + COOL:AIR) + FREQ:50HZ , ((COOL:AIR + MOVOL:200V , MOVOL:460V) + CAPPRM:MHLW , (MOVOL:380V , MOVOL:460V) + CAPPRM:ASME) + FREQ:60HZ) + CAPPRE:IEC , ((MOVOL:230V , MOVOL:575V) + COOL:AIR , MOVOL:460V) + CAPPRE:ULCUL + CAPPRM:ASME + FREQ:60HZ) **(25/02/2019 - 27/11/2019)** ((((CAPPRM:AS1210 , CAPPRM:CE , CAPPRM:MHLW , CAPPRM:MOM) + MOVOL:400V , CAPPRM:CE + MOVOL:500V , CAPPRM:MHLW + MOVOL:200V) + FREQ:50HZ , ((MOVOL:200V , MOVOL:460V) + CAPPRM:MHLW , (MOVOL:380V , MOVOL:460V) + CAPPRM:ASME) + FREQ:60HZ) + CAPPRE:IEC , (MOVOL:230V , MOVOL:460V , MOVOL:575V) + CAPPRE:ULCUL + CAPPRM:ASME + FREQ:60HZ) + COOL:AIR	
	Electrical legend:	Connector/terminal rail			
	Substituted by:	1089 0577 82 - END RETAINER (quantity: 1)			
	1088 0039 38	2	TERMINAL	**(12/12/2018 - 24/02/2019)** ((((CAPPRM:AS1210 , CAPPRM:CE , CAPPRM:MHLW , CAPPRM:MOM) + MOVOL:400V , (CAPPRM:CE + MOVOL:500V , CAPPRM:MHLW + MOVOL:200V) + COOL:AIR) + FREQ:50HZ , ((COOL:AIR + MOVOL:200V , MOVOL:460V) + CAPPRM:MHLW , (MOVOL:380V , MOVOL:460V) + CAPPRM:ASME) + FREQ:60HZ) + CAPPRE:IEC , ((MOVOL:230V , MOVOL:575V) + COOL:AIR , MOVOL:460V) + CAPPRE:ULCUL + CAPPRM:ASME + FREQ:60HZ) **(25/02/2019 - 27/11/2019)** ((((CAPPRM:AS1210 , CAPPRM:CE , CAPPRM:MHLW , CAPPRM:MOM) + MOVOL:400V , CAPPRM:CE + MOVOL:500V , CAPPRM:MHLW + MOVOL:200V) + FREQ:50HZ , ((MOVOL:200V , MOVOL:460V) + CAPPRM:MHLW , (MOVOL:380V , MOVOL:460V) + CAPPRM:ASME) + FREQ:60HZ) + CAPPRE:IEC , (MOVOL:230V , MOVOL:460V , MOVOL:575V) + CAPPRE:ULCUL + CAPPRM:ASME + FREQ:60HZ) + COOL:AIR	1X11:2,5

Legend:

CAPPRE:IEC - Component approval electrical:IEC
CAPPRM:ASME - Component approval mechanical:ASME
CAPPRM:MOM - Component approval mechanical:MOM
FREQ:60HZ - Frequency:60 Hz
MOVOL:200V - Supply voltage:200 V
MOVOL:400V - Supply voltage:400 V
MOVOL:575V - Supply voltage:575 V
CAPPRE:ULCUL - Component approval electrical:UL/cUL
CAPPRM:CE - Component approval mechanical:CE
COOL:AIR - Cooling:Air cooled
IDRY:N - Integrated dryer:No
MOVOL:230V - Supply voltage:230 V
MOVOL:460V - Supply voltage:460 V
CAPPRM:AS1210 - Component approval mechanical:AS1210
CAPPRM:MHLW - Component approval mechanical:MHLW
FREQ:50HZ - Frequency:50 Hz
MODEL:GA75VP_16 - Model:GA 75VSD+
MOVOL:380V - Supply voltage:380 V
MOVOL:500V - Supply voltage:500 V

21.6 - Cubicle components GA 75L VSD+ - (200V-400V-500V/50Hz - IEC, 200V-380V-460V/60Hz - IEC, 230V-460V-575V/60Hz - UL-cUL) - Pack (12/12/2018 - 27/11/2019)

((((CAPPRM:AS1210 , CAPPRM:CE , CAPPRM:MHLW , CAPPRM:MOM) + MOVOL:400V , CAPPRM:CE + COOL:AIR + MOVOL:500V) + FREQ:50HZ , ((MOVOL:380V , MOVOL:460V) + CAPPRM:ASME , CAPPRM:MHLW + MOVOL:460V) + FREQ:60HZ , CAPPRM:MHLW + COOL:AIR + MOVOL:200V) + CAPPRE:IEC , ((MOVOL:230V , MOVOL:575V) + COOL:AIR , MOVOL:460V) + CAPPRE:ULCUL + CAPPRM:ASME + FREQ:60HZ) + IDRY:N + MODEL:GA75VP_16

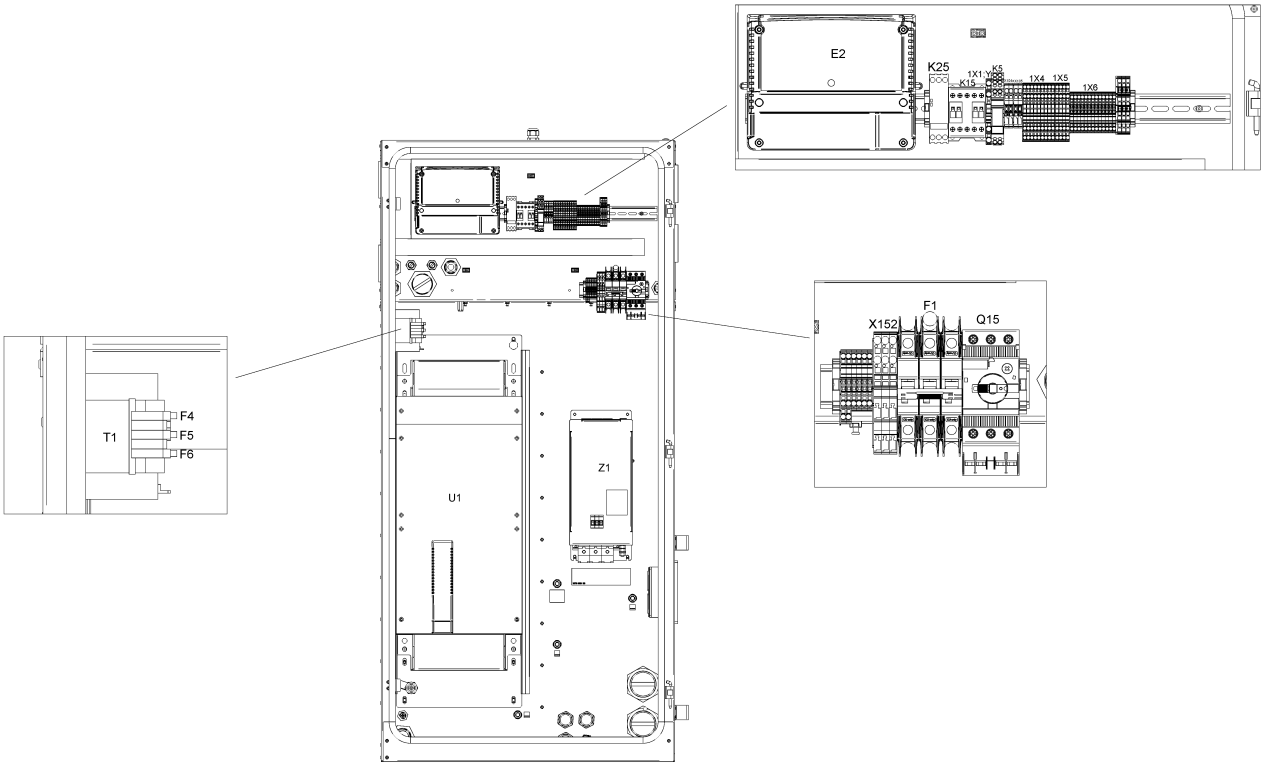

21.6 - Cubicle components GA 75L VSD+ - (200V-400V-500V/50Hz - IEC, 200V-380V-460V/60Hz - IEC, 230V-460V-575V/60Hz - UL-cUL) - Pack (12/12/2018 - 27/11/2019)

((((CAPPRM:AS1210 , CAPPRM:CE , CAPPRM:MHLW , CAPPRM:MOM) + MOVOL:400V , CAPPRM:CE + COOL:AIR + MOVOL:500V) + FREQ:50HZ , ((MOVOL:380V , MOVOL:460V) + CAPPRM:ASME , CAPPRM:MHLW + MOVOL:460V) + FREQ:60HZ , CAPPRM:MHLW + COOL:AIR + MOVOL:200V) + CAPPRE:IEC , ((MOVOL:230V , MOVOL:575V) + COOL:AIR , MOVOL:460V) + CAPPRE:ULCUL + CAPPRM:ASME + FREQ:60HZ) + IDRY:N + MODEL:GA75VP_16

Ref	Part Number	Qty	Name	Validity	EL
	1088 0039 40	1	PLATE	**(12/12/2018 - 24/02/2019)** ((((CAPPRM:AS1210 , CAPPRM:CE , CAPPRM:MHLW , CAPPRM:MOM) + MOVOL:400V , (CAPPRM:CE + MOVOL:500V , CAPPRM:MHLW + MOVOL:200V) + COOL:AIR) + FREQ:50HZ , ((COOL:AIR + MOVOL:200V , MOVOL:460V) + CAPPRM:MHLW , (MOVOL:380V , MOVOL:460V) + CAPPRM:ASME) + FREQ:60HZ) + CAPPRE:IEC , ((MOVOL:230V , MOVOL:575V) + COOL:AIR , MOVOL:460V) + CAPPRE:ULCUL + CAPPRM:ASME + FREQ:60HZ) **(25/02/2019 - 27/11/2019)** ((((CAPPRM:AS1210 , CAPPRM:CE , CAPPRM:MHLW , CAPPRM:MOM) + MOVOL:400V , CAPPRM:CE + MOVOL:500V , CAPPRM:MHLW + MOVOL:200V) + FREQ:50HZ , ((MOVOL:200V , MOVOL:460V) + CAPPRM:MHLW , (MOVOL:380V , MOVOL:460V) + CAPPRM:ASME) + FREQ:60HZ) + CAPPRE:IEC , (MOVOL:230V , MOVOL:460V , MOVOL:575V) + CAPPRE:ULCUL + CAPPRM:ASME + FREQ:60HZ) + COOL:AIR	1X11
	1088 0039 34	4	TERMINAL	**(12/12/2018 - 24/02/2019)** ((((CAPPRM:AS1210 , CAPPRM:CE , CAPPRM:MHLW , CAPPRM:MOM) + MOVOL:400V , (CAPPRM:CE + MOVOL:500V , CAPPRM:MHLW + MOVOL:200V) + COOL:AIR) + FREQ:50HZ , ((COOL:AIR + MOVOL:200V , MOVOL:460V) + CAPPRM:MHLW , (MOVOL:380V , MOVOL:460V) + CAPPRM:ASME) + FREQ:60HZ) + CAPPRE:IEC , ((MOVOL:230V , MOVOL:575V) + COOL:AIR , MOVOL:460V) + CAPPRE:ULCUL + CAPPRM:ASME + FREQ:60HZ) **(25/02/2019 - 27/11/2019)** ((((CAPPRM:AS1210 , CAPPRM:CE , CAPPRM:MHLW , CAPPRM:MOM) + MOVOL:400V , CAPPRM:CE + MOVOL:500V , CAPPRM:MHLW + MOVOL:200V) + FREQ:50HZ , ((MOVOL:200V , MOVOL:460V) + CAPPRM:MHLW , (MOVOL:380V , MOVOL:460V) + CAPPRM:ASME) + FREQ:60HZ) + CAPPRE:IEC , (MOVOL:230V , MOVOL:460V , MOVOL:575V) + CAPPRE:ULCUL + CAPPRM:ASME + FREQ:60HZ) + COOL:AIR	
	Electrical legend:	1X11:30,301,34			
	1088 0039 35	1	PLATE	**(12/12/2018 - 24/02/2019)** ((((CAPPRM:AS1210 , CAPPRM:CE , CAPPRM:MHLW , CAPPRM:MOM) + MOVOL:400V , (CAPPRM:CE + MOVOL:500V , CAPPRM:MHLW + MOVOL:200V) + COOL:AIR) + FREQ:50HZ , ((COOL:AIR + MOVOL:200V , MOVOL:460V) + CAPPRM:MHLW , (MOVOL:380V , MOVOL:460V) + CAPPRM:ASME) + FREQ:60HZ) + CAPPRE:IEC , ((MOVOL:230V , MOVOL:575V) + COOL:AIR , MOVOL:460V) + CAPPRE:ULCUL + CAPPRM:ASME + FREQ:60HZ) **(25/02/2019 - 27/11/2019)** ((((CAPPRM:AS1210 , CAPPRM:CE , CAPPRM:MHLW , CAPPRM:MOM) + MOVOL:400V , CAPPRM:CE + MOVOL:500V , CAPPRM:MHLW + MOVOL:200V) + FREQ:50HZ , ((MOVOL:200V , MOVOL:460V) + CAPPRM:MHLW , (MOVOL:380V , MOVOL:460V) + CAPPRM:ASME) + FREQ:60HZ) + CAPPRE:IEC , (MOVOL:230V , MOVOL:460V , MOVOL:575V) + CAPPRE:ULCUL + CAPPRM:ASME + FREQ:60HZ) + COOL:AIR	1X11

Legend:

CAPPRE:IEC - Component approval electrical:IEC
CAPPRE:ULCUL - Component approval electrical:UL/cUL
CAPPRM:AS1210 - Component approval mechanical:AS1210
CAPPRM:ASME - Component approval mechanical:ASME
CAPPRM:CE - Component approval mechanical:CE
CAPPRM:MHLW - Component approval mechanical:MHLW
CAPPRM:MOM - Component approval mechanical:MOM
COOL:AIR - Cooling:Air cooled
FREQ:50HZ - Frequency:50 Hz
FREQ:60HZ - Frequency:60 Hz
IDRY:N - Integrated dryer:No
MODEL:GA75VP_16 - Model:GA 75VSD+
MOVOL:200V - Supply voltage:200 V
MOVOL:230V - Supply voltage:230 V
MOVOL:380V - Supply voltage:380 V
MOVOL:400V - Supply voltage:400 V
MOVOL:460V - Supply voltage:460 V
MOVOL:500V - Supply voltage:500 V
MOVOL:575V - Supply voltage:575 V

21.6 - Cubicle components GA 75L VSD+ - (200V-400V-500V/50Hz - IEC, 200V-380V-460V/60Hz - IEC, 230V-460V-575V/60Hz - UL-cUL) - Pack (12/12/2018 - 27/11/2019)

((((CAPPRM:AS1210 , CAPPRM:CE , CAPPRM:MHLW , CAPPRM:MOM) + MOVOL:400V , CAPPRM:CE + COOL:AIR + MOVOL:500V) + FREQ:50HZ , ((MOVOL:380V , MOVOL:460V) + CAPPRM:ASME , CAPPRM:MHLW + MOVOL:460V) + FREQ:60HZ , CAPPRM:MHLW + COOL:AIR + MOVOL:200V) + CAPPRE:IEC , ((MOVOL:230V , MOVOL:575V) + COOL:AIR , MOVOL:460V) + CAPPRE:ULCUL + CAPPRM:ASME + FREQ:60HZ) + IDRY:N + MODEL:GA75VP_16

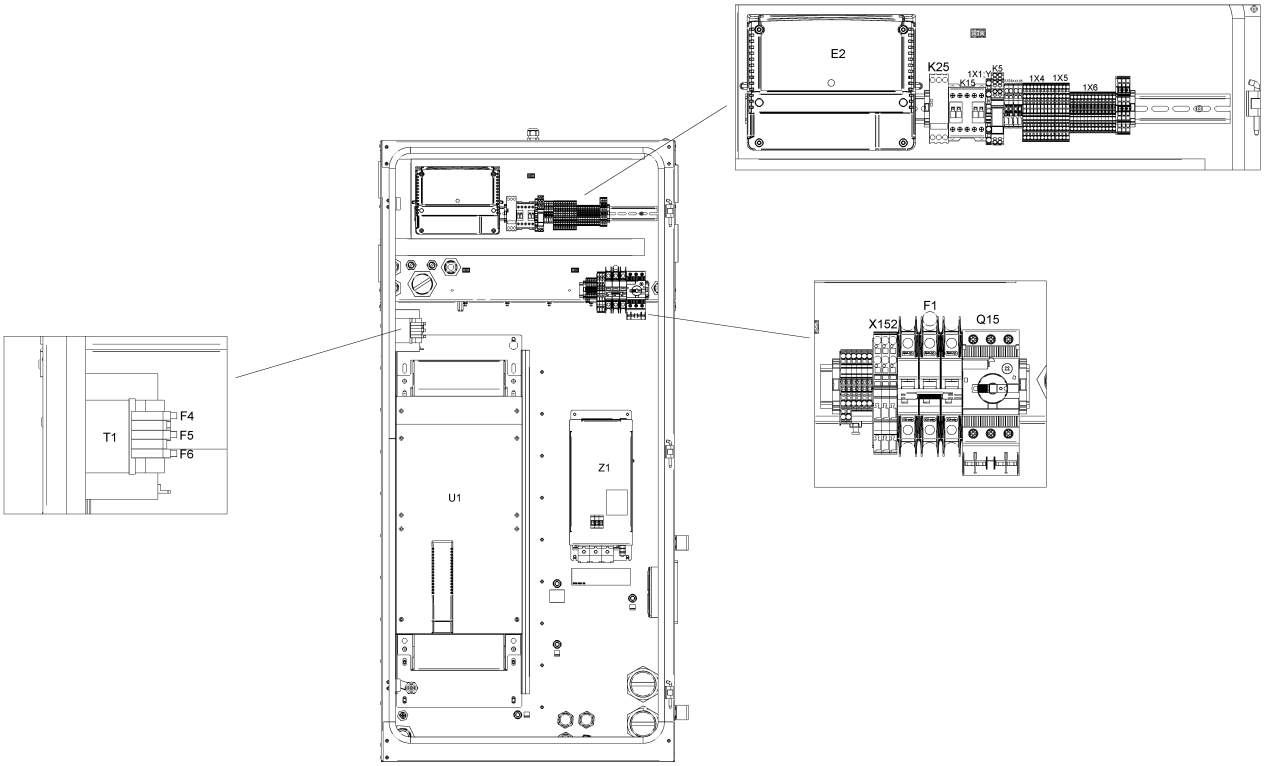

21.6 - Cubicle components GA 75L VSD+ - (200V-400V-500V/50Hz - IEC, 200V-380V-460V/60Hz - IEC, 230V-460V-575V/60Hz - UL-cUL) - Pack (12/12/2018 - 27/11/2019)

((((CAPPRM:AS1210 , CAPPRM:CE , CAPPRM:MHLW , CAPPRM:MOM) + MOVOL:400V , CAPPRM:CE + COOL:AIR + MOVOL:500V) + FREQ:50HZ , ((MOVOL:380V , MOVOL:460V) + CAPPRM:ASME , CAPPRM:MHLW + MOVOL:460V) + FREQ:60HZ , CAPPRM:MHLW + COOL:AIR + MOVOL:200V) + CAPPRE:IEC , ((MOVOL:230V , MOVOL:575V) + COOL:AIR , MOVOL:460V) + CAPPRE:ULCUL + CAPPRM:ASME + FREQ:60HZ) + IDRY:N + MODEL:GA75VP_16

Ref	Part Number	Qty	Name	Validity	EL
	1088 0039 04	2	TERMINAL	**(12/12/2018 - 24/02/2019)** ((((CAPPRM:AS1210 , CAPPRM:CE , CAPPRM:MHLW , CAPPRM:MOM) + MOVOL:400V , (CAPPRM:CE + MOVOL:500V , CAPPRM:MHLW + MOVOL:200V) + COOL:AIR) + FREQ:50HZ , ((COOL:AIR + MOVOL:200V , MOVOL:460V) + CAPPRM:MHLW , (MOVOL:380V , MOVOL:460V) + CAPPRM:ASME) + FREQ:60HZ) + CAPPRE:IEC , ((MOVOL:230V , MOVOL:575V) + COOL:AIR , MOVOL:460V) + CAPPRE:ULCUL + CAPPRM:ASME + FREQ:60HZ) **(25/02/2019 - 27/11/2019)** ((((CAPPRM:AS1210 , CAPPRM:CE , CAPPRM:MHLW , CAPPRM:MOM) + MOVOL:400V , CAPPRM:CE + MOVOL:500V , CAPPRM:MHLW + MOVOL:200V) + FREQ:50HZ , ((MOVOL:200V , MOVOL:460V) + CAPPRM:MHLW , (MOVOL:380V , MOVOL:460V) + CAPPRM:ASME) + FREQ:60HZ) + CAPPRE:IEC , (MOVOL:230V , MOVOL:460V , MOVOL:575V) + CAPPRE:ULCUL + CAPPRM:ASME + FREQ:60HZ) + COOL:AIR	X104a
	1088 0037 99	2	PIN	**(12/12/2018 - 24/02/2019)** ((((CAPPRM:AS1210 , CAPPRM:CE , CAPPRM:MHLW , CAPPRM:MOM) + MOVOL:400V , (CAPPRM:CE + MOVOL:500V , CAPPRM:MHLW + MOVOL:200V) + COOL:AIR) + FREQ:50HZ , ((COOL:AIR + MOVOL:200V , MOVOL:460V) + CAPPRM:MHLW , (MOVOL:380V , MOVOL:460V) + CAPPRM:ASME) + FREQ:60HZ) + CAPPRE:IEC , ((MOVOL:230V , MOVOL:575V) + COOL:AIR , MOVOL:460V) + CAPPRE:ULCUL + CAPPRM:ASME + FREQ:60HZ) **(25/02/2019 - 27/11/2019)** ((((CAPPRM:AS1210 , CAPPRM:CE , CAPPRM:MHLW , CAPPRM:MOM) + MOVOL:400V , CAPPRM:CE + MOVOL:500V , CAPPRM:MHLW + MOVOL:200V) + FREQ:50HZ , ((MOVOL:200V , MOVOL:460V) + CAPPRM:MHLW , (MOVOL:380V , MOVOL:460V) + CAPPRM:ASME) + FREQ:60HZ) + CAPPRE:IEC , (MOVOL:230V , MOVOL:460V , MOVOL:575V) + CAPPRE:ULCUL + CAPPRM:ASME + FREQ:60HZ) + COOL:AIR	X104a/X105
	1088 0039 02	1	PLATE	**(12/12/2018 - 24/02/2019)** ((((CAPPRM:AS1210 , CAPPRM:CE , CAPPRM:MHLW , CAPPRM:MOM) + MOVOL:400V , (CAPPRM:CE + MOVOL:500V , CAPPRM:MHLW + MOVOL:200V) + COOL:AIR) + FREQ:50HZ , ((COOL:AIR + MOVOL:200V , MOVOL:460V) + CAPPRM:MHLW , (MOVOL:380V , MOVOL:460V) + CAPPRM:ASME) + FREQ:60HZ) + CAPPRE:IEC , ((MOVOL:230V , MOVOL:575V) + COOL:AIR , MOVOL:460V) + CAPPRE:ULCUL + CAPPRM:ASME + FREQ:60HZ) **(25/02/2019 - 27/11/2019)** ((((CAPPRM:AS1210 , CAPPRM:CE , CAPPRM:MHLW , CAPPRM:MOM) + MOVOL:400V , CAPPRM:CE + MOVOL:500V , CAPPRM:MHLW + MOVOL:200V) + FREQ:50HZ , ((MOVOL:200V , MOVOL:460V) + CAPPRM:MHLW , (MOVOL:380V , MOVOL:460V) + CAPPRM:ASME) + FREQ:60HZ) + CAPPRE:IEC , (MOVOL:230V , MOVOL:460V , MOVOL:575V) + CAPPRE:ULCUL + CAPPRM:ASME + FREQ:60HZ) + COOL:AIR	X104a

Legend:

CAPPRE:IEC - Component approval electrical:IEC
CAPPRE:ULCUL - Component approval electrical:UL/cUL
CAPPRM:AS1210 - Component approval mechanical:AS1210
CAPPRM:ASME - Component approval mechanical:ASME
CAPPRM:CE - Component approval mechanical:CE
CAPPRM:MHLW - Component approval mechanical:MHLW
CAPPRM:MOM - Component approval mechanical:MOM
COOL:AIR - Cooling:Air cooled
FREQ:50HZ - Frequency:50 Hz
FREQ:60HZ - Frequency:60 Hz
IDRY:N - Integrated dryer:No
MODEL:GA75VP_16 - Model:GA 75VSD+
MOVOL:200V - Supply voltage:200 V
MOVOL:230V - Supply voltage:230 V
MOVOL:380V - Supply voltage:380 V
MOVOL:400V - Supply voltage:400 V
MOVOL:460V - Supply voltage:460 V
MOVOL:500V - Supply voltage:500 V
MOVOL:575V - Supply voltage:575 V

21.6 - Cubicle components GA 75L VSD+ - (200V-400V-500V/50Hz - IEC, 200V-380V-460V/60Hz - IEC, 230V-460V-575V/60Hz - UL-cUL) - Pack (12/12/2018 - 27/11/2019)

((((CAPPRM:AS1210 , CAPPRM:CE , CAPPRM:MHLW , CAPPRM:MOM) + MOVOL:400V , CAPPRM:CE + COOL:AIR + MOVOL:500V) + FREQ:50HZ , ((MOVOL:380V , MOVOL:460V) + CAPPRM:ASME , CAPPRM:MHLW + MOVOL:460V) + FREQ:60HZ , CAPPRM:MHLW + COOL:AIR + MOVOL:200V) + CAPPRE:IEC , ((MOVOL:230V , MOVOL:575V) + COOL:AIR , MOVOL:460V) + CAPPRE:ULCUL + CAPPRM:ASME + FREQ:60HZ) + IDRY:N + MODEL:GA75VP_16

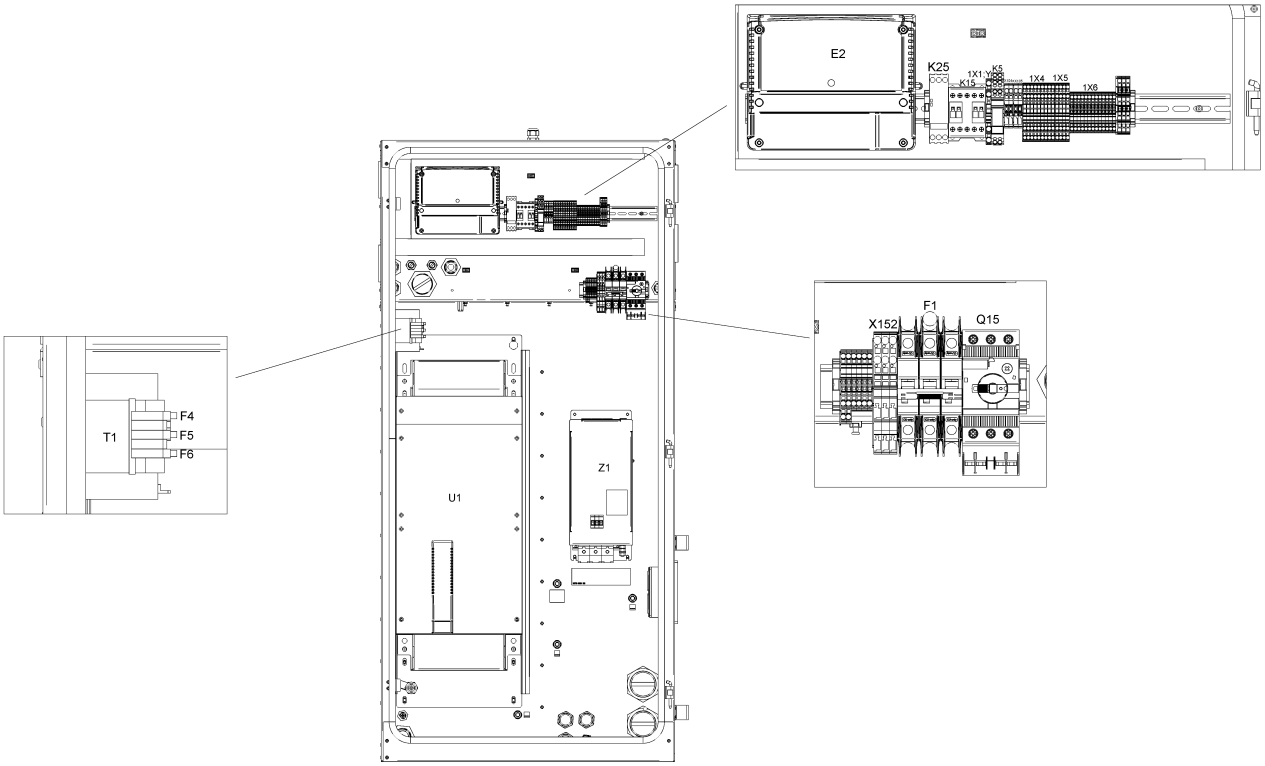

21.6 - Cubicle components GA 75L VSD+ - (200V-400V-500V/50Hz - IEC, 200V-380V-460V/60Hz - IEC, 230V-460V-575V/60Hz - UL-cUL) - Pack (12/12/2018 - 27/11/2019)

((((CAPPRM:AS1210 , CAPPRM:CE , CAPPRM:MHLW , CAPPRM:MOM) + MOVOL:400V , CAPPRM:CE + COOL:AIR + MOVOL:500V) + FREQ:50HZ , ((MOVOL:380V , MOVOL:460V) + CAPPRM:ASME , CAPPRM:MHLW + MOVOL:460V) + FREQ:60HZ , CAPPRM:MHLW + COOL:AIR + MOVOL:200V) + CAPPRE:IEC , ((MOVOL:230V , MOVOL:575V) + COOL:AIR , MOVOL:460V) + CAPPRE:ULCUL + CAPPRM:ASME + FREQ:60HZ) + IDRY:N + MODEL:GA75VP_16

Ref	Part Number	Qty	Name	Validity	EL
	1088 0039 07	2	TERMINAL	**(12/12/2018 - 24/02/2019)** ((((CAPPRM:AS1210 , CAPPRM:CE , CAPPRM:MHLW , CAPPRM:MOM) + MOVOL:400V , (CAPPRM:CE + MOVOL:500V , CAPPRM:MHLW + MOVOL:200V) + COOL:AIR) + FREQ:50HZ , ((COOL:AIR + MOVOL:200V , MOVOL:460V) + CAPPRM:MHLW , (MOVOL:380V , MOVOL:460V) + CAPPRM:ASME) + FREQ:60HZ) + CAPPRE:IEC , ((MOVOL:230V , MOVOL:575V) + COOL:AIR , MOVOL:460V) + CAPPRE:ULCUL + CAPPRM:ASME + FREQ:60HZ) **(25/02/2019 - 27/11/2019)** ((((CAPPRM:AS1210 , CAPPRM:CE , CAPPRM:MHLW , CAPPRM:MOM) + MOVOL:400V , CAPPRM:CE + MOVOL:500V , CAPPRM:MHLW + MOVOL:200V) + FREQ:50HZ , ((MOVOL:200V , MOVOL:460V) + CAPPRM:MHLW , (MOVOL:380V , MOVOL:460V) + CAPPRM:ASME) + FREQ:60HZ) + CAPPRE:IEC , (MOVOL:230V , MOVOL:460V , MOVOL:575V) + CAPPRE:ULCUL + CAPPRM:ASME + FREQ:60HZ) + COOL:AIR	X105
	1088 0039 05	1	PLATE	**(12/12/2018 - 24/02/2019)** ((((CAPPRM:AS1210 , CAPPRM:CE , CAPPRM:MHLW , CAPPRM:MOM) + MOVOL:400V , (CAPPRM:CE + MOVOL:500V , CAPPRM:MHLW + MOVOL:200V) + COOL:AIR) + FREQ:50HZ , ((COOL:AIR + MOVOL:200V , MOVOL:460V) + CAPPRM:MHLW , (MOVOL:380V , MOVOL:460V) + CAPPRM:ASME) + FREQ:60HZ) + CAPPRE:IEC , ((MOVOL:230V , MOVOL:575V) + COOL:AIR , MOVOL:460V) + CAPPRE:ULCUL + CAPPRM:ASME + FREQ:60HZ) **(25/02/2019 - 27/11/2019)** ((((CAPPRM:AS1210 , CAPPRM:CE , CAPPRM:MHLW , CAPPRM:MOM) + MOVOL:400V , CAPPRM:CE + MOVOL:500V , CAPPRM:MHLW + MOVOL:200V) + FREQ:50HZ , ((MOVOL:200V , MOVOL:460V) + CAPPRM:MHLW , (MOVOL:380V , MOVOL:460V) + CAPPRM:ASME) + FREQ:60HZ) + CAPPRE:IEC , (MOVOL:230V , MOVOL:460V , MOVOL:575V) + CAPPRE:ULCUL + CAPPRM:ASME + FREQ:60HZ) + COOL:AIR	X105
	1088 0039 34	13	TERMINAL	**(12/12/2018 - 24/02/2019)** ((((CAPPRM:AS1210 , CAPPRM:CE , CAPPRM:MHLW , CAPPRM:MOM) + MOVOL:400V , (CAPPRM:CE + MOVOL:500V , CAPPRM:MHLW + MOVOL:200V) + COOL:AIR) + FREQ:50HZ , ((COOL:AIR + MOVOL:200V , MOVOL:460V) + CAPPRM:MHLW , (MOVOL:380V , MOVOL:460V) + CAPPRM:ASME) + FREQ:60HZ) + CAPPRE:IEC , ((MOVOL:230V , MOVOL:575V) + COOL:AIR , MOVOL:460V) + CAPPRE:ULCUL + CAPPRM:ASME + FREQ:60HZ) **(25/02/2019 - 27/11/2019)** ((((CAPPRM:AS1210 , CAPPRM:CE , CAPPRM:MHLW , CAPPRM:MOM) + MOVOL:400V , CAPPRM:CE + MOVOL:500V , CAPPRM:MHLW + MOVOL:200V) + FREQ:50HZ , ((MOVOL:200V , MOVOL:460V) + CAPPRM:MHLW , (MOVOL:380V , MOVOL:460V) + CAPPRM:ASME) + FREQ:60HZ) + CAPPRE:IEC , (MOVOL:230V , MOVOL:460V , MOVOL:575V) + CAPPRE:ULCUL + CAPPRM:ASME + FREQ:60HZ) + COOL:AIR	1X6

Legend:

CAPPRE:IEC - Component approval electrical:IEC
CAPPRE:ULCUL - Component approval electrical:UL/cUL
CAPPRM:AS1210 - Component approval mechanical:AS1210
CAPPRM:ASME - Component approval mechanical:ASME
CAPPRM:CE - Component approval mechanical:CE
CAPPRM:MHLW - Component approval mechanical:MHLW
CAPPRM:MOM - Component approval mechanical:MOM
COOL:AIR - Cooling:Air cooled
FREQ:50HZ - Frequency:50 Hz
FREQ:60HZ - Frequency:60 Hz
IDRY:N - Integrated dryer:No
MODEL:GA75VP_16 - Model:GA 75VSD+
MOVOL:200V - Supply voltage:200 V
MOVOL:230V - Supply voltage:230 V
MOVOL:380V - Supply voltage:380 V
MOVOL:400V - Supply voltage:400 V
MOVOL:460V - Supply voltage:460 V
MOVOL:500V - Supply voltage:500 V
MOVOL:575V - Supply voltage:575 V

21.6 - Cubicle components GA 75L VSD+ - (200V-400V-500V/50Hz - IEC, 200V-380V-460V/60Hz - IEC, 230V-460V-575V/60Hz - UL-cUL) - Pack (12/12/2018 - 27/11/2019)

((((CAPPRM:AS1210 , CAPPRM:CE , CAPPRM:MHLW , CAPPRM:MOM) + MOVOL:400V , CAPPRM:CE + COOL:AIR + MOVOL:500V) + FREQ:50HZ , ((MOVOL:380V , MOVOL:460V) + CAPPRM:ASME , CAPPRM:MHLW + MOVOL:460V) + FREQ:60HZ , CAPPRM:MHLW + COOL:AIR + MOVOL:200V) + CAPPRE:IEC , ((MOVOL:230V , MOVOL:575V) + COOL:AIR , MOVOL:460V) + CAPPRE:ULCUL + CAPPRM:ASME + FREQ:60HZ) + IDRY:N + MODEL:GA75VP_16

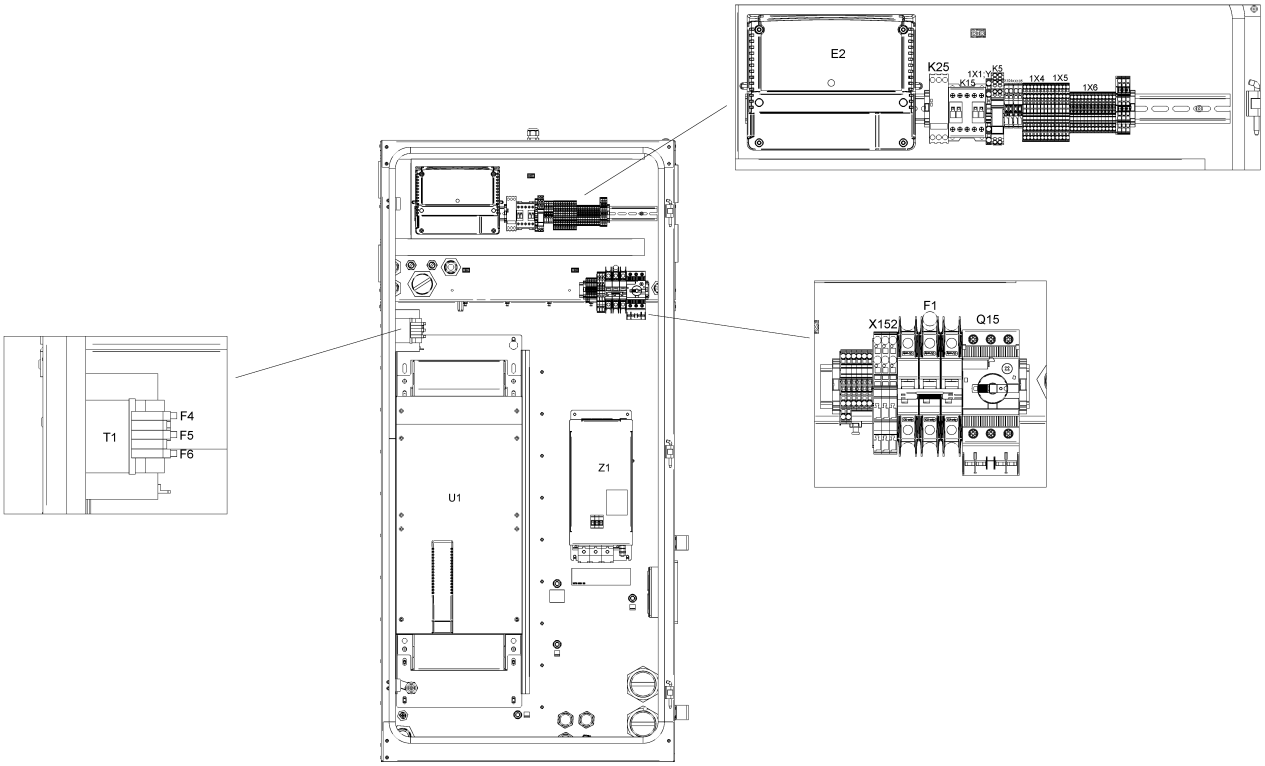

Ref	Part Number	Qty	Name	Validity	EL
	1088 0037 69	3	CONNECTOR	**(12/12/2018 - 24/02/2019)** ((((CAPPRM:AS1210 , CAPPRM:CE , CAPPRM:MHLW , CAPPRM:MOM) + MOVOL:400V , (CAPPRM:CE + MOVOL:500V , CAPPRM:MHLW + MOVOL:200V) + COOL:AIR) + FREQ:50HZ , ((COOL:AIR + MOVOL:200V , MOVOL:460V) + CAPPRM:MHLW , (MOVOL:380V , MOVOL:460V) + CAPPRM:ASME) + FREQ:60HZ) + CAPPRE:IEC , ((MOVOL:230V , MOVOL:575V) + COOL:AIR , MOVOL:460V) + CAPPRE:ULCUL + CAPPRM:ASME + FREQ:60HZ) **(25/02/2019 - 27/11/2019)** ((((CAPPRM:AS1210 , CAPPRM:CE , CAPPRM:MHLW , CAPPRM:MOM) + MOVOL:400V , CAPPRM:CE + MOVOL:500V , CAPPRM:MHLW + MOVOL:200V) + FREQ:50HZ , ((MOVOL:200V , MOVOL:460V) + CAPPRM:MHLW , (MOVOL:380V , MOVOL:460V) + CAPPRM:ASME) + FREQ:60HZ) + CAPPRE:IEC , (MOVOL:230V , MOVOL:460V , MOVOL:575V) + CAPPRE:ULCUL + CAPPRM:ASME + FREQ:60HZ) + COOL:AIR	1X7
	1088 0039 35	1	PLATE	**(12/12/2018 - 24/02/2019)** ((((CAPPRM:AS1210 , CAPPRM:CE , CAPPRM:MHLW , CAPPRM:MOM) + MOVOL:400V , (CAPPRM:CE + MOVOL:500V , CAPPRM:MHLW + MOVOL:200V) + COOL:AIR) + FREQ:50HZ , ((COOL:AIR + MOVOL:200V , MOVOL:460V) + CAPPRM:MHLW , (MOVOL:380V , MOVOL:460V) + CAPPRM:ASME) + FREQ:60HZ) + CAPPRE:IEC , ((MOVOL:230V , MOVOL:575V) + COOL:AIR , MOVOL:460V) + CAPPRE:ULCUL + CAPPRM:ASME + FREQ:60HZ) **(25/02/2019 - 27/11/2019)** ((((CAPPRM:AS1210 , CAPPRM:CE , CAPPRM:MHLW , CAPPRM:MOM) + MOVOL:400V , CAPPRM:CE + MOVOL:500V , CAPPRM:MHLW + MOVOL:200V) + FREQ:50HZ , ((MOVOL:200V , MOVOL:460V) + CAPPRM:MHLW , (MOVOL:380V , MOVOL:460V) + CAPPRM:ASME) + FREQ:60HZ) + CAPPRE:IEC , (MOVOL:230V , MOVOL:460V , MOVOL:575V) + CAPPRE:ULCUL + CAPPRM:ASME + FREQ:60HZ) + COOL:AIR	1X6
	1088 0040 37	1	END PLATE	**(12/12/2018 - 24/02/2019)** ((((CAPPRM:AS1210 , CAPPRM:CE , CAPPRM:MHLW , CAPPRM:MOM) + MOVOL:400V , (CAPPRM:CE + MOVOL:500V , CAPPRM:MHLW + MOVOL:200V) + COOL:AIR) + FREQ:50HZ , ((COOL:AIR + MOVOL:200V , MOVOL:460V) + CAPPRM:MHLW , (MOVOL:380V , MOVOL:460V) + CAPPRM:ASME) + FREQ:60HZ) + CAPPRE:IEC , ((MOVOL:230V , MOVOL:575V) + COOL:AIR , MOVOL:460V) + CAPPRE:ULCUL + CAPPRM:ASME + FREQ:60HZ) **(25/02/2019 - 27/11/2019)** ((((CAPPRM:AS1210 , CAPPRM:CE , CAPPRM:MHLW , CAPPRM:MOM) + MOVOL:400V , CAPPRM:CE + MOVOL:500V , CAPPRM:MHLW + MOVOL:200V) + FREQ:50HZ , ((MOVOL:200V , MOVOL:460V) + CAPPRM:MHLW , (MOVOL:380V , MOVOL:460V) + CAPPRM:ASME) + FREQ:60HZ) + CAPPRE:IEC , (MOVOL:230V , MOVOL:460V , MOVOL:575V) + CAPPRE:ULCUL + CAPPRM:ASME + FREQ:60HZ) + COOL:AIR	1X7

Legend:

CAPPRE:IEC - Component approval electrical:IEC
CAPPRM:ASME - Component approval mechanical:ASME
CAPPRM:MOM - Component approval mechanical:MOM
FREQ:60HZ - Frequency:60 Hz
MOVOL:200V - Supply voltage:200 V
MOVOL:400V - Supply voltage:400 V
MOVOL:575V - Supply voltage:575 V
CAPPRE:ULCUL - Component approval electrical:UL/cUL
CAPPRM:CE - Component approval mechanical:CE
COOL:AIR - Cooling:Air cooled
IDRY:N - Integrated dryer:No
MOVOL:230V - Supply voltage:230 V
MOVOL:460V - Supply voltage:460 V
CAPPRM:AS1210 - Component approval mechanical:AS1210
CAPPRM:MHLW - Component approval mechanical:MHLW
FREQ:50HZ - Frequency:50 Hz
MODEL:GA75VP_16 - Model:GA 75VSD+
MOVOL:380V - Supply voltage:380 V
MOVOL:500V - Supply voltage:500 V

21.6 - Cubicle components GA 75L VSD+ - (200V-400V-500V/50Hz - IEC, 200V-380V-460V/60Hz - IEC, 230V-460V-575V/60Hz - UL-cUL) - Pack (12/12/2018 - 27/11/2019)

((((CAPPRM:AS1210 , CAPPRM:CE , CAPPRM:MHLW , CAPPRM:MOM) + MOVOL:400V , CAPPRM:CE + COOL:AIR + MOVOL:500V) + FREQ:50HZ , ((MOVOL:380V , MOVOL:460V) + CAPPRM:ASME , CAPPRM:MHLW + MOVOL:460V) + FREQ:60HZ , CAPPRM:MHLW + COOL:AIR + MOVOL:200V) + CAPPRE:IEC , ((MOVOL:230V , MOVOL:575V) + COOL:AIR , MOVOL:460V) + CAPPRE:ULCUL + CAPPRM:ASME + FREQ:60HZ) + IDRY:N + MODEL:GA75VP_16

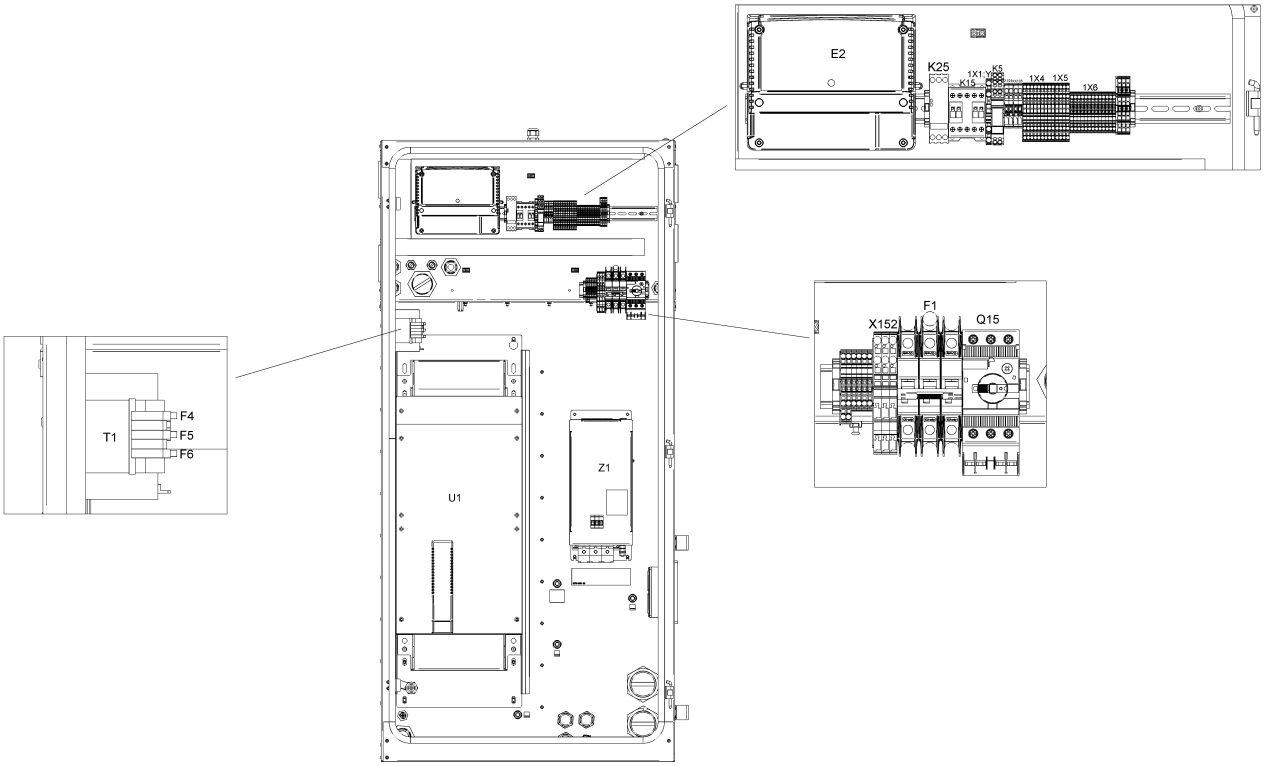

21.6 - Cubicle components GA 75L VSD+ - (200V-400V-500V/50Hz - IEC, 200V-380V-460V/60Hz - IEC, 230V-460V-575V/60Hz - UL-cUL) - Pack (12/12/2018 - 27/11/2019)

((((CAPPRM:AS1210 , CAPPRM:CE , CAPPRM:MHLW , CAPPRM:MOM) + MOVOL:400V , CAPPRM:CE + COOL:AIR + MOVOL:500V) + FREQ:50HZ , ((MOVOL:380V , MOVOL:460V) + CAPPRM:ASME , CAPPRM:MHLW + MOVOL:460V) + FREQ:60HZ , CAPPRM:MHLW + COOL:AIR + MOVOL:200V) + CAPPRE:IEC , ((MOVOL:230V , MOVOL:575V) + COOL:AIR , MOVOL:460V) + CAPPRE:ULCUL + CAPPRM:ASME + FREQ:60HZ) + IDRY:N + MODEL:GA75VP_16

Ref	Part Number	Qty	Name	Validity	EL
	1088 0039 36	9	TERMINAL	**(12/12/2018 - 24/02/2019)** ((((CAPPRM:AS1210 , CAPPRM:CE , CAPPRM:MHLW , CAPPRM:MOM) + MOVOL:400V , (CAPPRM:CE + MOVOL:500V , CAPPRM:MHLW + MOVOL:200V) + COOL:AIR) + FREQ:50HZ , ((COOL:AIR + MOVOL:200V , MOVOL:460V) + CAPPRM:MHLW , (MOVOL:380V , MOVOL:460V) + CAPPRM:ASME) + FREQ:60HZ) + CAPPRE:IEC , ((MOVOL:230V , MOVOL:575V) + COOL:AIR , MOVOL:460V) + CAPPRE:ULCUL + CAPPRM:ASME + FREQ:60HZ) **(25/02/2019 - 27/11/2019)** ((((CAPPRM:AS1210 , CAPPRM:CE , CAPPRM:MHLW , CAPPRM:MOM) + MOVOL:400V , CAPPRM:CE + MOVOL:500V , CAPPRM:MHLW + MOVOL:200V) + FREQ:50HZ , ((MOVOL:200V , MOVOL:460V) + CAPPRM:MHLW , (MOVOL:380V , MOVOL:460V) + CAPPRM:ASME) + FREQ:60HZ) + CAPPRE:IEC , (MOVOL:230V , MOVOL:460V , MOVOL:575V) + CAPPRE:ULCUL + CAPPRM:ASME + FREQ:60HZ) + COOL:AIR	1X4
	1088 0039 36	4	TERMINAL	**(12/12/2018 - 24/02/2019)** ((((CAPPRM:AS1210 , CAPPRM:CE , CAPPRM:MHLW , CAPPRM:MOM) + MOVOL:400V , (CAPPRM:CE + MOVOL:500V , CAPPRM:MHLW + MOVOL:200V) + COOL:AIR) + FREQ:50HZ , ((COOL:AIR + MOVOL:200V , MOVOL:460V) + CAPPRM:MHLW , (MOVOL:380V , MOVOL:460V) + CAPPRM:ASME) + FREQ:60HZ) + CAPPRE:IEC , ((MOVOL:230V , MOVOL:575V) + COOL:AIR , MOVOL:460V) + CAPPRE:ULCUL + CAPPRM:ASME + FREQ:60HZ) **(25/02/2019 - 27/11/2019)** ((((CAPPRM:AS1210 , CAPPRM:CE , CAPPRM:MHLW , CAPPRM:MOM) + MOVOL:400V , CAPPRM:CE + MOVOL:500V , CAPPRM:MHLW + MOVOL:200V) + FREQ:50HZ , ((MOVOL:200V , MOVOL:460V) + CAPPRM:MHLW , (MOVOL:380V , MOVOL:460V) + CAPPRM:ASME) + FREQ:60HZ) + CAPPRE:IEC , (MOVOL:230V , MOVOL:460V , MOVOL:575V) + CAPPRE:ULCUL + CAPPRM:ASME + FREQ:60HZ) + COOL:AIR	1X6
	1088 0039 37	1	END PLATE	**(12/12/2018 - 24/02/2019)** ((((CAPPRM:AS1210 , CAPPRM:CE , CAPPRM:MHLW , CAPPRM:MOM) + MOVOL:400V , (CAPPRM:CE + MOVOL:500V , CAPPRM:MHLW + MOVOL:200V) + COOL:AIR) + FREQ:50HZ , ((COOL:AIR + MOVOL:200V , MOVOL:460V) + CAPPRM:MHLW , (MOVOL:380V , MOVOL:460V) + CAPPRM:ASME) + FREQ:60HZ) + CAPPRE:IEC , ((MOVOL:230V , MOVOL:575V) + COOL:AIR , MOVOL:460V) + CAPPRE:ULCUL + CAPPRM:ASME + FREQ:60HZ) **(25/02/2019 - 27/11/2019)** ((((CAPPRM:AS1210 , CAPPRM:CE , CAPPRM:MHLW , CAPPRM:MOM) + MOVOL:400V , CAPPRM:CE + MOVOL:500V , CAPPRM:MHLW + MOVOL:200V) + FREQ:50HZ , ((MOVOL:200V , MOVOL:460V) + CAPPRM:MHLW , (MOVOL:380V , MOVOL:460V) + CAPPRM:ASME) + FREQ:60HZ) + CAPPRE:IEC , (MOVOL:230V , MOVOL:460V , MOVOL:575V) + CAPPRE:ULCUL + CAPPRM:ASME + FREQ:60HZ) + COOL:AIR	1X4

Legend:

CAPPRE:IEC - Component approval electrical:IEC
CAPPRE:ULCUL - Component approval electrical:UL/cUL
CAPPRM:AS1210 - Component approval mechanical:AS1210
CAPPRM:ASME - Component approval mechanical:ASME
CAPPRM:CE - Component approval mechanical:CE
CAPPRM:MHLW - Component approval mechanical:MHLW
CAPPRM:MOM - Component approval mechanical:MOM
COOL:AIR - Cooling:Air cooled
FREQ:50HZ - Frequency:50 Hz
FREQ:60HZ - Frequency:60 Hz
IDRY:N - Integrated dryer:No
MODEL:GA75VP_16 - Model:GA 75VSD+
MOVOL:200V - Supply voltage:200 V
MOVOL:230V - Supply voltage:230 V
MOVOL:380V - Supply voltage:380 V
MOVOL:400V - Supply voltage:400 V
MOVOL:460V - Supply voltage:460 V
MOVOL:500V - Supply voltage:500 V
MOVOL:575V - Supply voltage:575 V

21.6 - Cubicle components GA 75L VSD+ - (200V-400V-500V/50Hz - IEC, 200V-380V-460V/60Hz - IEC, 230V-460V-575V/60Hz - UL-cUL) - Pack (12/12/2018 - 27/11/2019)

((((CAPPRM:AS1210 , CAPPRM:CE , CAPPRM:MHLW , CAPPRM:MOM) + MOVOL:400V , CAPPRM:CE + COOL:AIR + MOVOL:500V) + FREQ:50HZ , ((MOVOL:380V , MOVOL:460V) + CAPPRM:ASME , CAPPRM:MHLW + MOVOL:460V) + FREQ:60HZ , CAPPRM:MHLW + COOL:AIR + MOVOL:200V) + CAPPRE:IEC , ((MOVOL:230V , MOVOL:575V) + COOL:AIR , MOVOL:460V) + CAPPRE:ULCUL + CAPPRM:ASME + FREQ:60HZ) + IDRY:N + MODEL:GA75VP_16

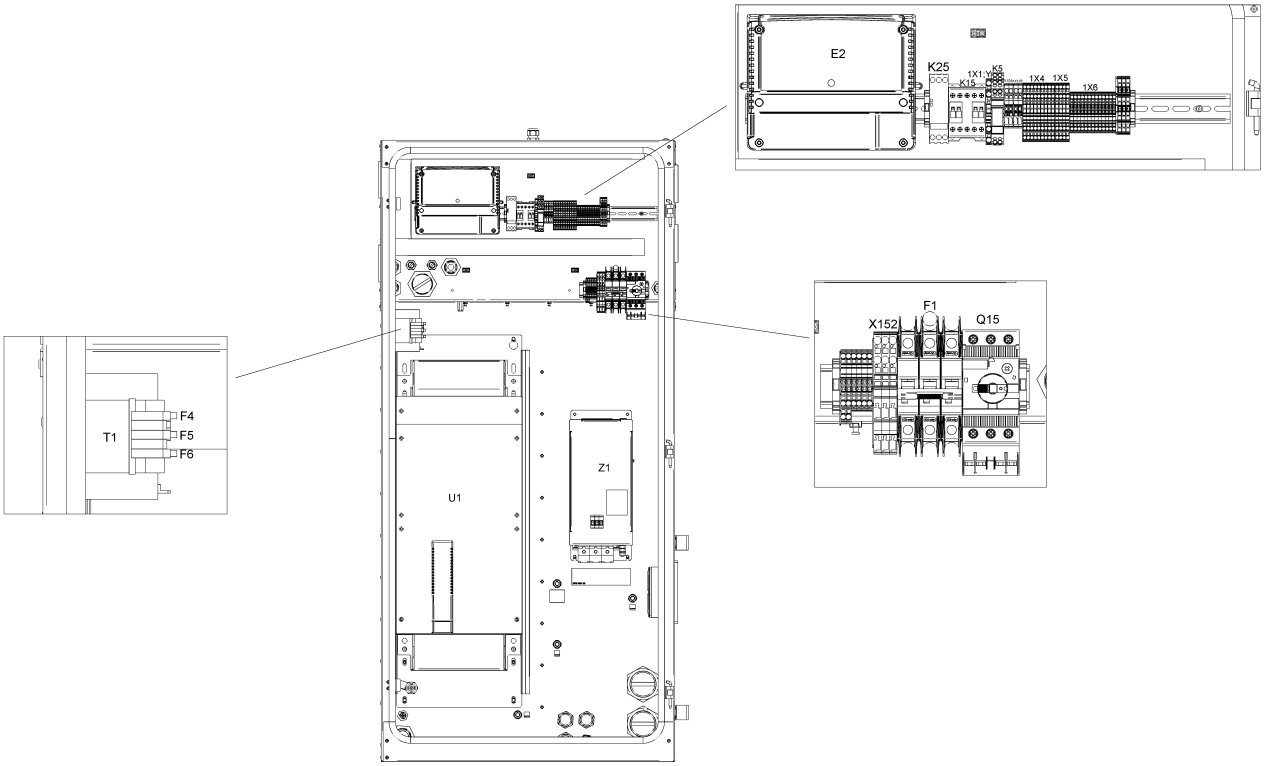

21.6 - Cubicle components GA 75L VSD+ - (200V-400V-500V/50Hz - IEC, 200V-380V-460V/60Hz - IEC, 230V-460V-575V/60Hz - UL-cUL) - Pack (12/12/2018 - 27/11/2019)

((((CAPPRM:AS1210 , CAPPRM:CE , CAPPRM:MHLW , CAPPRM:MOM) + MOVOL:400V , CAPPRM:CE + COOL:AIR + MOVOL:500V) + FREQ:50HZ , ((MOVOL:380V , MOVOL:460V) + CAPPRM:ASME , CAPPRM:MHLW + MOVOL:460V) + FREQ:60HZ , CAPPRM:MHLW + COOL:AIR + MOVOL:200V) + CAPPRE:IEC , ((MOVOL:230V , MOVOL:575V) + COOL:AIR , MOVOL:460V) + CAPPRE:ULCUL + CAPPRM:ASME + FREQ:60HZ) + IDRY:N + MODEL:GA75VP_16

Ref	Part Number	Qty	Name	Validity	EL
	1088 0039 37	1	END PLATE	**(12/12/2018 - 24/02/2019)** ((((CAPPRM:AS1210 , CAPPRM:CE , CAPPRM:MHLW , CAPPRM:MOM) + MOVOL:400V , (CAPPRM:CE + MOVOL:500V , CAPPRM:MHLW + MOVOL:200V) + COOL:AIR) + FREQ:50HZ , ((COOL:AIR + MOVOL:200V , MOVOL:460V) + CAPPRM:MHLW , (MOVOL:380V , MOVOL:460V) + CAPPRM:ASME) + FREQ:60HZ) + CAPPRE:IEC , ((MOVOL:230V , MOVOL:575V) + COOL:AIR , MOVOL:460V) + CAPPRE:ULCUL + CAPPRM:ASME + FREQ:60HZ) **(25/02/2019 - 27/11/2019)** ((((CAPPRM:AS1210 , CAPPRM:CE , CAPPRM:MHLW , CAPPRM:MOM) + MOVOL:400V , CAPPRM:CE + MOVOL:500V , CAPPRM:MHLW + MOVOL:200V) + FREQ:50HZ , ((MOVOL:200V , MOVOL:460V) + CAPPRM:MHLW , (MOVOL:380V , MOVOL:460V) + CAPPRM:ASME) + FREQ:60HZ) + CAPPRE:IEC , (MOVOL:230V , MOVOL:460V , MOVOL:575V) + CAPPRE:ULCUL + CAPPRM:ASME + FREQ:60HZ) + COOL:AIR	1X6
	1088 0039 37	1	END PLATE	**(12/12/2018 - 24/02/2019)** ((((CAPPRM:AS1210 , CAPPRM:CE , CAPPRM:MHLW , CAPPRM:MOM) + MOVOL:400V , (CAPPRM:CE + MOVOL:500V , CAPPRM:MHLW + MOVOL:200V) + COOL:AIR) + FREQ:50HZ , ((COOL:AIR + MOVOL:200V , MOVOL:460V) + CAPPRM:MHLW , (MOVOL:380V , MOVOL:460V) + CAPPRM:ASME) + FREQ:60HZ) + CAPPRE:IEC , ((MOVOL:230V , MOVOL:575V) + COOL:AIR , MOVOL:460V) + CAPPRE:ULCUL + CAPPRM:ASME + FREQ:60HZ) **(25/02/2019 - 27/11/2019)** ((((CAPPRM:AS1210 , CAPPRM:CE , CAPPRM:MHLW , CAPPRM:MOM) + MOVOL:400V , CAPPRM:CE + MOVOL:500V , CAPPRM:MHLW + MOVOL:200V) + FREQ:50HZ , ((MOVOL:200V , MOVOL:460V) + CAPPRM:MHLW , (MOVOL:380V , MOVOL:460V) + CAPPRM:ASME) + FREQ:60HZ) + CAPPRE:IEC , (MOVOL:230V , MOVOL:460V , MOVOL:575V) + CAPPRE:ULCUL + CAPPRM:ASME + FREQ:60HZ) + COOL:AIR	1X1:Y/D
	1088 0037 81	1	CONNECTOR	**(12/12/2018 - 24/02/2019)** ((((CAPPRM:AS1210 , CAPPRM:CE , CAPPRM:MHLW , CAPPRM:MOM) + MOVOL:400V , (CAPPRM:CE + MOVOL:500V , CAPPRM:MHLW + MOVOL:200V) + COOL:AIR) + FREQ:50HZ , ((COOL:AIR + MOVOL:200V , MOVOL:460V) + CAPPRM:MHLW , (MOVOL:380V , MOVOL:460V) + CAPPRM:ASME) + FREQ:60HZ) + CAPPRE:IEC , ((MOVOL:230V , MOVOL:575V) + COOL:AIR , MOVOL:460V) + CAPPRE:ULCUL + CAPPRM:ASME + FREQ:60HZ) **(25/02/2019 - 27/11/2019)** ((((CAPPRM:AS1210 , CAPPRM:CE , CAPPRM:MHLW , CAPPRM:MOM) + MOVOL:400V , CAPPRM:CE + MOVOL:500V , CAPPRM:MHLW + MOVOL:200V) + FREQ:50HZ , ((MOVOL:200V , MOVOL:460V) + CAPPRM:MHLW , (MOVOL:380V , MOVOL:460V) + CAPPRM:ASME) + FREQ:60HZ) + CAPPRE:IEC , (MOVOL:230V , MOVOL:460V , MOVOL:575V) + CAPPRE:ULCUL + CAPPRM:ASME + FREQ:60HZ) + COOL:AIR	2X27

Legend:

CAPPRE:IEC - Component approval electrical:IEC
CAPPRE:ULCUL - Component approval electrical:UL/cUL
CAPPRM:AS1210 - Component approval mechanical:AS1210
CAPPRM:ASME - Component approval mechanical:ASME
CAPPRM:CE - Component approval mechanical:CE
CAPPRM:MHLW - Component approval mechanical:MHLW
CAPPRM:MOM - Component approval mechanical:MOM
COOL:AIR - Cooling:Air cooled
FREQ:50HZ - Frequency:50 Hz
FREQ:60HZ - Frequency:60 Hz
IDRY:N - Integrated dryer:No
MODEL:GA75VP_16 - Model:GA 75VSD+
MOVOL:200V - Supply voltage:200 V
MOVOL:230V - Supply voltage:230 V
MOVOL:380V - Supply voltage:380 V
MOVOL:400V - Supply voltage:400 V
MOVOL:460V - Supply voltage:460 V
MOVOL:500V - Supply voltage:500 V
MOVOL:575V - Supply voltage:575 V

21.6 - Cubicle components GA 75L VSD+ - (200V-400V-500V/50Hz - IEC, 200V-380V-460V/60Hz - IEC, 230V-460V-575V/60Hz - UL-cUL) - Pack (12/12/2018 - 27/11/2019)

((((CAPPRM:AS1210 , CAPPRM:CE , CAPPRM:MHLW , CAPPRM:MOM) + MOVOL:400V , CAPPRM:CE + COOL:AIR + MOVOL:500V) + FREQ:50HZ , ((MOVOL:380V , MOVOL:460V) + CAPPRM:ASME , CAPPRM:MHLW + MOVOL:460V) + FREQ:60HZ , CAPPRM:MHLW + COOL:AIR + MOVOL:200V) + CAPPRE:IEC , ((MOVOL:230V , MOVOL:575V) + COOL:AIR , MOVOL:460V) + CAPPRE:ULCUL + CAPPRM:ASME + FREQ:60HZ) + IDRY:N + MODEL:GA75VP_16

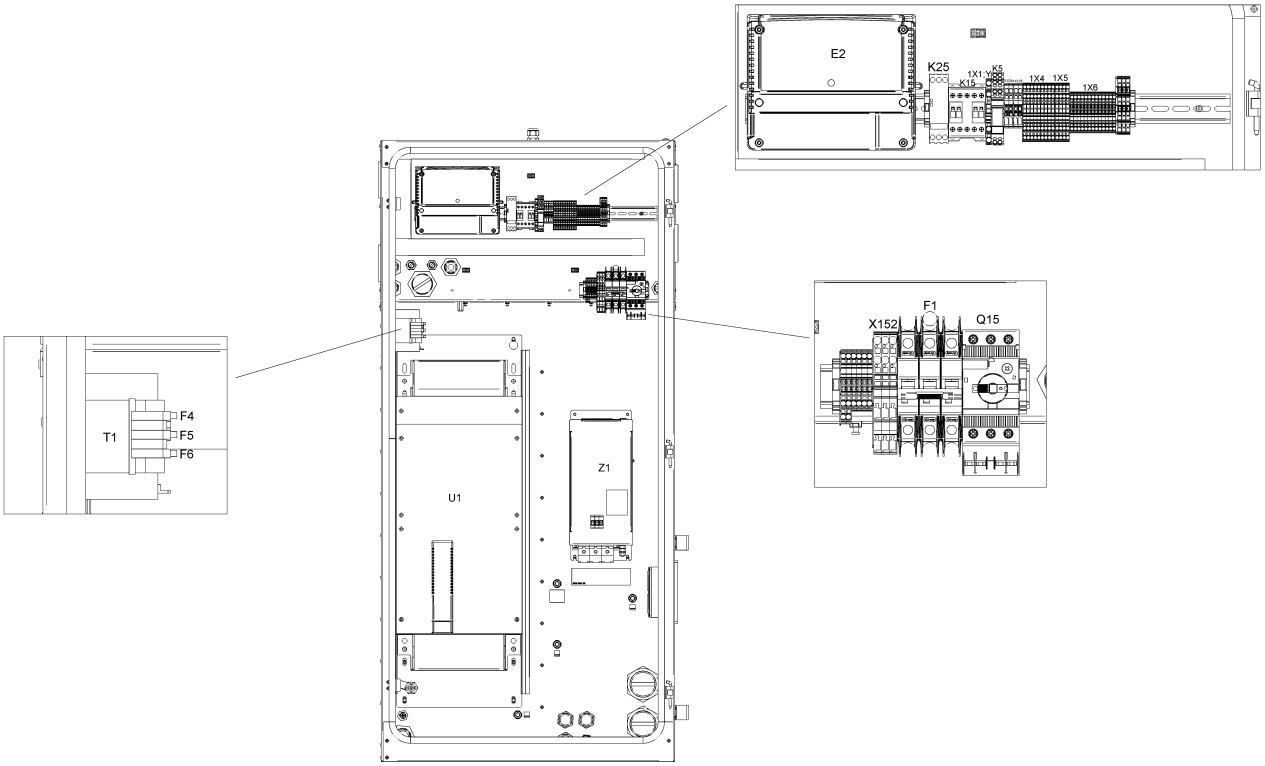

21.6 - Cubicle components GA 75L VSD+ - (200V-400V-500V/50Hz - IEC, 200V-380V-460V/60Hz - IEC, 230V-460V-575V/60Hz - UL-cUL) - Pack (12/12/2018 - 27/11/2019)

((((CAPPRM:AS1210 , CAPPRM:CE , CAPPRM:MHLW , CAPPRM:MOM) + MOVOL:400V , CAPPRM:CE + COOL:AIR + MOVOL:500V) + FREQ:50HZ , ((MOVOL:380V , MOVOL:460V) + CAPPRM:ASME , CAPPRM:MHLW + MOVOL:460V) + FREQ:60HZ , CAPPRM:MHLW + COOL:AIR + MOVOL:200V) + CAPPRE:IEC , ((MOVOL:230V , MOVOL:575V) + COOL:AIR , MOVOL:460V) + CAPPRE:ULCUL + CAPPRM:ASME + FREQ:60HZ) + IDRY:N + MODEL:GA75VP_16

Ref	Part Number	Qty	Name	Validity	EL
	1088 0037 80	1	CONNECTOR	**(12/12/2018 - 24/02/2019)** ((((CAPPRM:AS1210 , CAPPRM:CE , CAPPRM:MHLW , CAPPRM:MOM) + MOVOL:400V , (CAPPRM:CE + MOVOL:500V , CAPPRM:MHLW + MOVOL:200V) + COOL:AIR) + FREQ:50HZ , ((COOL:AIR + MOVOL:200V , MOVOL:460V) + CAPPRM:MHLW , (MOVOL:380V , MOVOL:460V) + CAPPRM:ASME) + FREQ:60HZ) + CAPPRE:IEC , ((MOVOL:230V , MOVOL:575V) + COOL:AIR , MOVOL:460V) + CAPPRE:ULCUL + CAPPRM:ASME + FREQ:60HZ) **(25/02/2019 - 27/11/2019)** ((((CAPPRM:AS1210 , CAPPRM:CE , CAPPRM:MHLW , CAPPRM:MOM) + MOVOL:400V , CAPPRM:CE + MOVOL:500V , CAPPRM:MHLW + MOVOL:200V) + FREQ:50HZ , ((MOVOL:200V , MOVOL:460V) + CAPPRM:MHLW , (MOVOL:380V , MOVOL:460V) + CAPPRM:ASME) + FREQ:60HZ) + CAPPRE:IEC , (MOVOL:230V , MOVOL:460V , MOVOL:575V) + CAPPRE:ULCUL + CAPPRM:ASME + FREQ:60HZ) + COOL:AIR	2X28
	1088 0031 32	1	CONNECTOR	**(12/12/2018 - 24/02/2019)** ((((CAPPRM:AS1210 , CAPPRM:CE , CAPPRM:MHLW , CAPPRM:MOM) + MOVOL:400V , (CAPPRM:CE + MOVOL:500V , CAPPRM:MHLW + MOVOL:200V) + COOL:AIR) + FREQ:50HZ , ((COOL:AIR + MOVOL:200V , MOVOL:460V) + CAPPRM:MHLW , (MOVOL:380V , MOVOL:460V) + CAPPRM:ASME) + FREQ:60HZ) + CAPPRE:IEC , ((MOVOL:230V , MOVOL:575V) + COOL:AIR , MOVOL:460V) + CAPPRE:ULCUL + CAPPRM:ASME + FREQ:60HZ) **(25/02/2019 - 27/11/2019)** ((((CAPPRM:AS1210 , CAPPRM:CE , CAPPRM:MHLW , CAPPRM:MOM) + MOVOL:400V , CAPPRM:CE + MOVOL:500V , CAPPRM:MHLW + MOVOL:200V) + FREQ:50HZ , ((MOVOL:200V , MOVOL:460V) + CAPPRM:MHLW , (MOVOL:380V , MOVOL:460V) + CAPPRM:ASME) + FREQ:60HZ) + CAPPRE:IEC , (MOVOL:230V , MOVOL:460V , MOVOL:575V) + CAPPRE:ULCUL + CAPPRM:ASME + FREQ:60HZ) + COOL:AIR	2X30
	1088 0031 26	1	CONNECTOR 6-POLE	**(12/12/2018 - 24/02/2019)** ((((CAPPRM:AS1210 , CAPPRM:CE , CAPPRM:MHLW , CAPPRM:MOM) + MOVOL:400V , (CAPPRM:CE + MOVOL:500V , CAPPRM:MHLW + MOVOL:200V) + COOL:AIR) + FREQ:50HZ , ((COOL:AIR + MOVOL:200V , MOVOL:460V) + CAPPRM:MHLW , (MOVOL:380V , MOVOL:460V) + CAPPRM:ASME) + FREQ:60HZ) + CAPPRE:IEC , ((MOVOL:230V , MOVOL:575V) + COOL:AIR , MOVOL:460V) + CAPPRE:ULCUL + CAPPRM:ASME + FREQ:60HZ) **(25/02/2019 - 27/11/2019)** ((((CAPPRM:AS1210 , CAPPRM:CE , CAPPRM:MHLW , CAPPRM:MOM) + MOVOL:400V , CAPPRM:CE + MOVOL:500V , CAPPRM:MHLW + MOVOL:200V) + FREQ:50HZ , ((MOVOL:200V , MOVOL:460V) + CAPPRM:MHLW , (MOVOL:380V , MOVOL:460V) + CAPPRM:ASME) + FREQ:60HZ) + CAPPRE:IEC , (MOVOL:230V , MOVOL:460V , MOVOL:575V) + CAPPRE:ULCUL + CAPPRM:ASME + FREQ:60HZ) + COOL:AIR	2X31

Legend:

CAPPRE:IEC - Component approval electrical:IEC
CAPPRE:ULCUL - Component approval electrical:UL/cUL
CAPPRM:AS1210 - Component approval mechanical:AS1210
CAPPRM:ASME - Component approval mechanical:ASME
CAPPRM:CE - Component approval mechanical:CE
CAPPRM:MHLW - Component approval mechanical:MHLW
CAPPRM:MOM - Component approval mechanical:MOM
COOL:AIR - Cooling:Air cooled
FREQ:50HZ - Frequency:50 Hz
FREQ:60HZ - Frequency:60 Hz
IDRY:N - Integrated dryer:No
MODEL:GA75VP_16 - Model:GA 75VSD+
MOVOL:200V - Supply voltage:200 V
MOVOL:230V - Supply voltage:230 V
MOVOL:380V - Supply voltage:380 V
MOVOL:400V - Supply voltage:400 V
MOVOL:460V - Supply voltage:460 V
MOVOL:500V - Supply voltage:500 V
MOVOL:575V - Supply voltage:575 V

21.6 - Cubicle components GA 75L VSD+ - (200V-400V-500V/50Hz - IEC, 200V-380V-460V/60Hz - IEC, 230V-460V-575V/60Hz - UL-cUL) - Pack (12/12/2018 - 27/11/2019)

((((CAPPRM:AS1210 , CAPPRM:CE , CAPPRM:MHLW , CAPPRM:MOM) + MOVOL:400V , CAPPRM:CE + COOL:AIR + MOVOL:500V) + FREQ:50HZ , ((MOVOL:380V , MOVOL:460V) + CAPPRM:ASME , CAPPRM:MHLW + MOVOL:460V) + FREQ:60HZ , CAPPRM:MHLW + COOL:AIR + MOVOL:200V) + CAPPRE:IEC , ((MOVOL:230V , MOVOL:575V) + COOL:AIR , MOVOL:460V) + CAPPRE:ULCUL + CAPPRM:ASME + FREQ:60HZ) + IDRY:N + MODEL:GA75VP_16

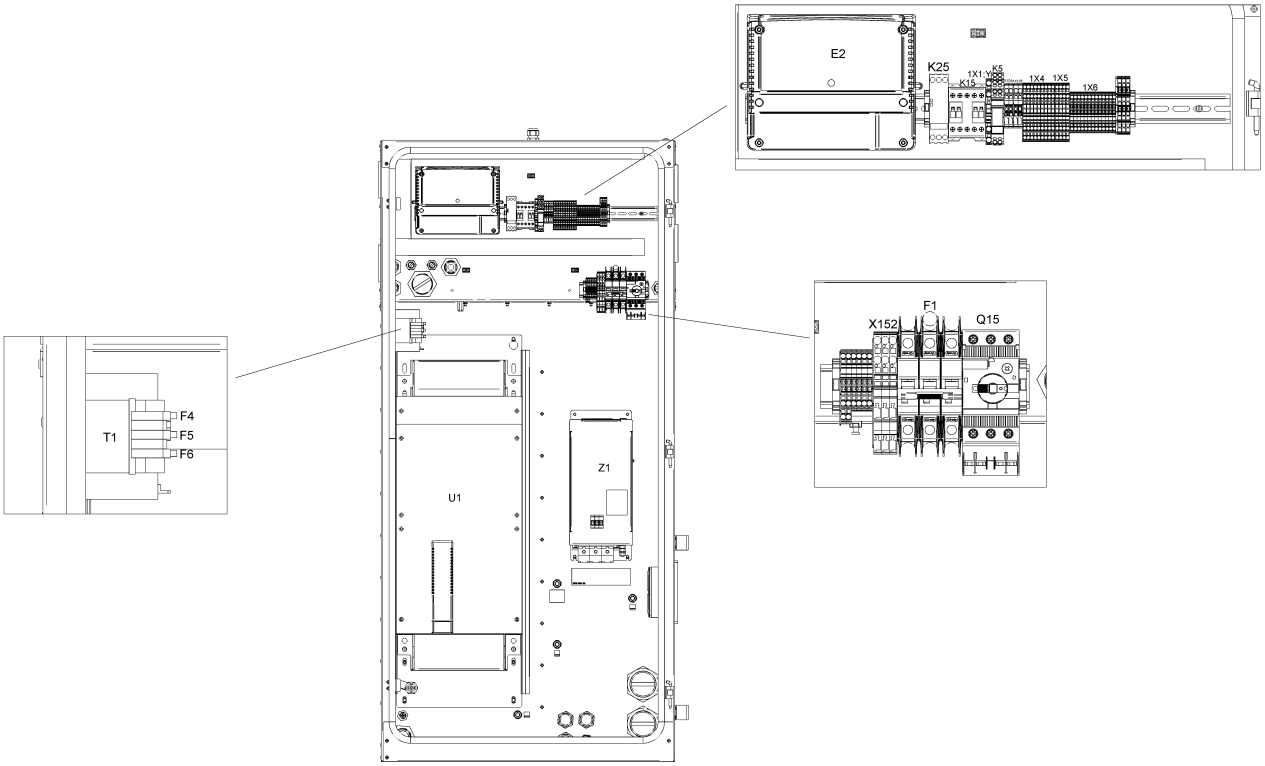

21.6 - Cubicle components GA 75L VSD+ - (200V-400V-500V/50Hz - IEC, 200V-380V-460V/60Hz - IEC, 230V-460V-575V/60Hz - UL-cUL) - Pack (12/12/2018 - 27/11/2019)

((((CAPPRM:AS1210 , CAPPRM:CE , CAPPRM:MHLW , CAPPRM:MOM) + MOVOL:400V , CAPPRM:CE + COOL:AIR + MOVOL:500V) + FREQ:50HZ , ((MOVOL:380V , MOVOL:460V) + CAPPRM:ASME , CAPPRM:MHLW + MOVOL:460V) + FREQ:60HZ , CAPPRM:MHLW + COOL:AIR + MOVOL:200V) + CAPPRE:IEC , ((MOVOL:230V , MOVOL:575V) + COOL:AIR , MOVOL:460V) + CAPPRE:ULCUL + CAPPRM:ASME + FREQ:60HZ) + IDRY:N + MODEL:GA75VP_16

Ref	Part Number	Qty	Name	Validity	EL
	~~1089 9664 06~~	1	SWITCH	**(12/12/2018 - 24/02/2019)** ((((CAPPRM:AS1210 , CAPPRM:CE , CAPPRM:MHLW , CAPPRM:MOM) + MOVOL:400V , (CAPPRM:CE + MOVOL:500V , CAPPRM:MHLW + MOVOL:200V) + COOL:AIR) + FREQ:50HZ , ((COOL:AIR + MOVOL:200V , MOVOL:460V) + CAPPRM:MHLW , (MOVOL:380V , MOVOL:460V) + CAPPRM:ASME) + FREQ:60HZ) + CAPPRE:IEC , ((MOVOL:230V , MOVOL:575V) + COOL:AIR , MOVOL:460V) + CAPPRE:ULCUL + CAPPRM:ASME + FREQ:60HZ) **(25/02/2019 - 27/11/2019)** ((((CAPPRM:AS1210 , CAPPRM:CE , CAPPRM:MHLW , CAPPRM:MOM) + MOVOL:400V , CAPPRM:CE + MOVOL:500V , CAPPRM:MHLW + MOVOL:200V) + FREQ:50HZ , ((MOVOL:200V , MOVOL:460V) + CAPPRM:MHLW , (MOVOL:380V , MOVOL:460V) + CAPPRM:ASME) + FREQ:60HZ) + CAPPRE:IEC , (MOVOL:230V , MOVOL:460V , MOVOL:575V) + CAPPRE:ULCUL + CAPPRM:ASME + FREQ:60HZ) + COOL:AIR	Q15
	Substituted by:	1089 9551 97 - AUX.CONTACT CIRCUIT BREAKER (quantity: 1)			
	1089 9551 18	1	CIRCUIT BREAKER	**(12/12/2018 - 24/02/2019)** ((((CAPPRM:AS1210 , CAPPRM:CE , CAPPRM:MHLW , CAPPRM:MOM) + MOVOL:400V , (CAPPRM:CE + MOVOL:500V , CAPPRM:MHLW + MOVOL:200V) + COOL:AIR) + FREQ:50HZ , ((COOL:AIR + MOVOL:200V , MOVOL:460V) + CAPPRM:MHLW , (MOVOL:380V , MOVOL:460V) + CAPPRM:ASME) + FREQ:60HZ) + CAPPRE:IEC , ((MOVOL:230V , MOVOL:575V) + COOL:AIR , MOVOL:460V) + CAPPRE:ULCUL + CAPPRM:ASME + FREQ:60HZ) **(25/02/2019 - 27/11/2019)** ((((CAPPRM:AS1210 , CAPPRM:CE , CAPPRM:MHLW , CAPPRM:MOM) + MOVOL:400V , CAPPRM:CE + MOVOL:500V , CAPPRM:MHLW + MOVOL:200V) + FREQ:50HZ , ((MOVOL:200V , MOVOL:460V) + CAPPRM:MHLW , (MOVOL:380V , MOVOL:460V) + CAPPRM:ASME) + FREQ:60HZ) + CAPPRE:IEC , (MOVOL:230V , MOVOL:460V , MOVOL:575V) + CAPPRE:ULCUL + CAPPRM:ASME + FREQ:60HZ) + COOL:AIR	Q15
	1088 0038 26	1	TERMINAL	**(12/12/2018 - 24/02/2019)** ((((CAPPRM:AS1210 , CAPPRM:CE , CAPPRM:MHLW , CAPPRM:MOM) + MOVOL:400V , (CAPPRM:CE + MOVOL:500V , CAPPRM:MHLW + MOVOL:200V) + COOL:AIR) + FREQ:50HZ , ((COOL:AIR + MOVOL:200V , MOVOL:460V) + CAPPRM:MHLW , (MOVOL:380V , MOVOL:460V) + CAPPRM:ASME) + FREQ:60HZ) + CAPPRE:IEC , ((MOVOL:230V , MOVOL:575V) + COOL:AIR , MOVOL:460V) + CAPPRE:ULCUL + CAPPRM:ASME + FREQ:60HZ) **(25/02/2019 - 27/11/2019)** ((((CAPPRM:AS1210 , CAPPRM:CE , CAPPRM:MHLW , CAPPRM:MOM) + MOVOL:400V , CAPPRM:CE + MOVOL:500V , CAPPRM:MHLW + MOVOL:200V) + FREQ:50HZ , ((MOVOL:200V , MOVOL:460V) + CAPPRM:MHLW , (MOVOL:380V , MOVOL:460V) + CAPPRM:ASME) + FREQ:60HZ) + CAPPRE:IEC , (MOVOL:230V , MOVOL:460V , MOVOL:575V) + CAPPRE:ULCUL + CAPPRM:ASME + FREQ:60HZ) + COOL:AIR	1X1:Y/D

Legend:

CAPPRE:IEC - Component approval electrical:IEC
CAPPRE:ULCUL - Component approval electrical:UL/cUL
CAPPRM:AS1210 - Component approval mechanical:AS1210
CAPPRM:ASME - Component approval mechanical:ASME
CAPPRM:CE - Component approval mechanical:CE
CAPPRM:MHLW - Component approval mechanical:MHLW
CAPPRM:MOM - Component approval mechanical:MOM
COOL:AIR - Cooling:Air cooled
FREQ:50HZ - Frequency:50 Hz
FREQ:60HZ - Frequency:60 Hz
IDRY:N - Integrated dryer:No
MODEL:GA75VP_16 - Model:GA 75VSD+
MOVOL:200V - Supply voltage:200 V
MOVOL:230V - Supply voltage:230 V
MOVOL:380V - Supply voltage:380 V
MOVOL:400V - Supply voltage:400 V
MOVOL:460V - Supply voltage:460 V
MOVOL:500V - Supply voltage:500 V
MOVOL:575V - Supply voltage:575 V

21.6 - Cubicle components GA 75L VSD+ - (200V-400V-500V/50Hz - IEC, 200V-380V-460V/60Hz - IEC, 230V-460V-575V/60Hz - UL-cUL) - Pack (12/12/2018 - 27/11/2019)

((((CAPPRM:AS1210 , CAPPRM:CE , CAPPRM:MHLW , CAPPRM:MOM) + MOVOL:400V , CAPPRM:CE + COOL:AIR + MOVOL:500V) + FREQ:50HZ , ((MOVOL:380V , MOVOL:460V) + CAPPRM:ASME , CAPPRM:MHLW + MOVOL:460V) + FREQ:60HZ , CAPPRM:MHLW + COOL:AIR + MOVOL:200V) + CAPPRE:IEC , ((MOVOL:230V , MOVOL:575V) + COOL:AIR , MOVOL:460V) + CAPPRE:ULCUL + CAPPRM:ASME + FREQ:60HZ) + IDRY:N + MODEL:GA75VP_16

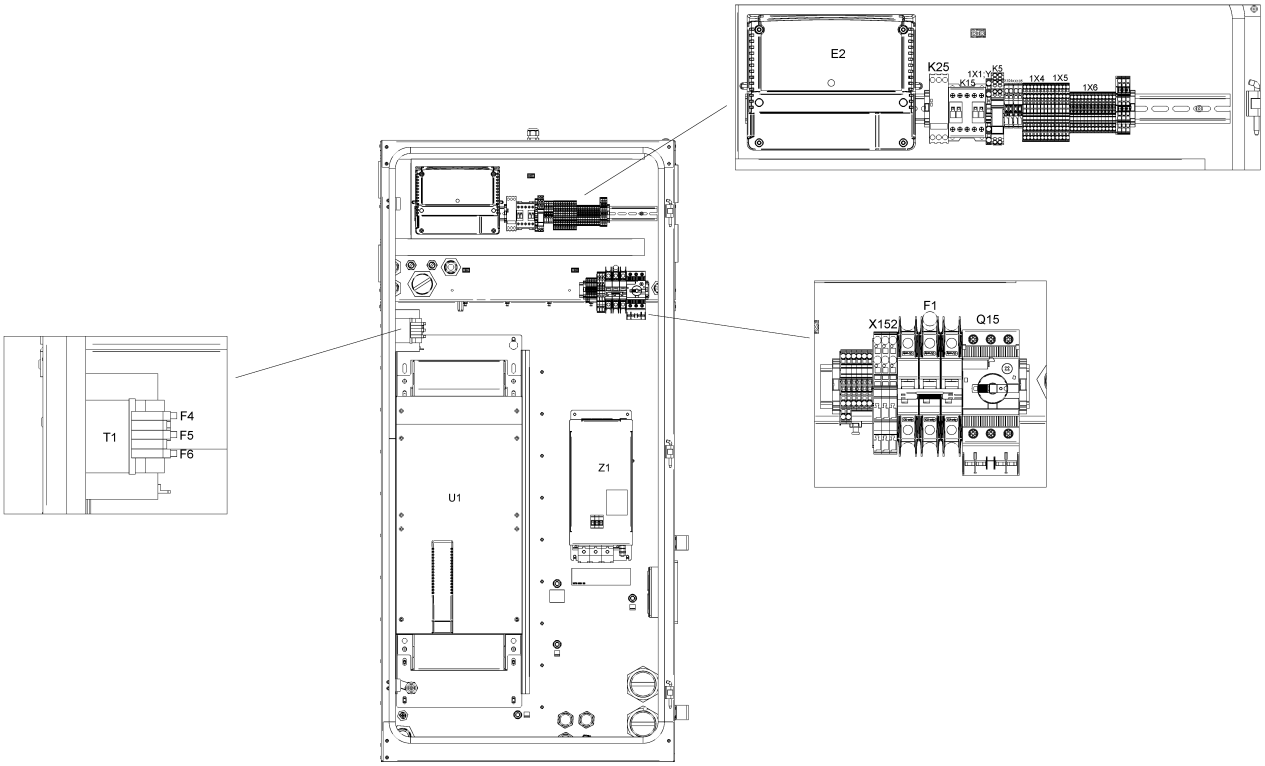

21.6 - Cubicle components GA 75L VSD+ - (200V-400V-500V/50Hz - IEC, 200V-380V-460V/60Hz - IEC, 230V-460V-575V/60Hz - UL-cUL) - Pack (12/12/2018 - 27/11/2019)

((((CAPPRM:AS1210 , CAPPRM:CE , CAPPRM:MHLW , CAPPRM:MOM) + MOVOL:400V , CAPPRM:CE + COOL:AIR + MOVOL:500V) + FREQ:50HZ , ((MOVOL:380V , MOVOL:460V) + CAPPRM:ASME , CAPPRM:MHLW + MOVOL:460V) + FREQ:60HZ , CAPPRM:MHLW + COOL:AIR + MOVOL:200V) + CAPPRE:IEC , ((MOVOL:230V , MOVOL:575V) + COOL:AIR , MOVOL:460V) + CAPPRE:ULCUL + CAPPRM:ASME + FREQ:60HZ) + IDRY:N + MODEL:GA75VP_16

Ref	Part Number	Qty	Name	Validity	EL
	1089 9602 79	1	CONTACTOR	**(12/12/2018 - 24/02/2019)** ((((CAPPRM:AS1210 , CAPPRM:CE , CAPPRM:MHLW , CAPPRM:MOM) + MOVOL:400V , (CAPPRM:CE + MOVOL:500V , CAPPRM:MHLW + MOVOL:200V) + COOL:AIR) + FREQ:50HZ , ((COOL:AIR + MOVOL:200V , MOVOL:460V) + CAPPRM:MHLW , (MOVOL:380V , MOVOL:460V) + CAPPRM:ASME) + FREQ:60HZ) + CAPPRE:IEC , ((MOVOL:230V , MOVOL:575V) + COOL:AIR , MOVOL:460V) + CAPPRE:ULCUL + CAPPRM:ASME + FREQ:60HZ) **(25/02/2019 - 27/11/2019)** ((((CAPPRM:AS1210 , CAPPRM:CE , CAPPRM:MHLW , CAPPRM:MOM) + MOVOL:400V , CAPPRM:CE + MOVOL:500V , CAPPRM:MHLW + MOVOL:200V) + FREQ:50HZ , ((MOVOL:200V , MOVOL:460V) + CAPPRM:MHLW , (MOVOL:380V , MOVOL:460V) + CAPPRM:ASME) + FREQ:60HZ) + CAPPRE:IEC , (MOVOL:230V , MOVOL:460V , MOVOL:575V) + CAPPRE:ULCUL + CAPPRM:ASME + FREQ:60HZ) + COOL:AIR	K15
	1089 9461 26	1	PHASE SEQUENCE RELAY	**(12/12/2018 - 24/02/2019)** ((((CAPPRM:AS1210 , CAPPRM:CE , CAPPRM:MHLW , CAPPRM:MOM) + MOVOL:400V , (CAPPRM:CE + MOVOL:500V , CAPPRM:MHLW + MOVOL:200V) + COOL:AIR) + FREQ:50HZ , ((COOL:AIR + MOVOL:200V , MOVOL:460V) + CAPPRM:MHLW , (MOVOL:380V , MOVOL:460V) + CAPPRM:ASME) + FREQ:60HZ) + CAPPRE:IEC , ((MOVOL:230V , MOVOL:575V) + COOL:AIR , MOVOL:460V) + CAPPRE:ULCUL + CAPPRM:ASME + FREQ:60HZ) **(25/02/2019 - 27/11/2019)** ((((CAPPRM:AS1210 , CAPPRM:CE , CAPPRM:MHLW , CAPPRM:MOM) + MOVOL:400V , CAPPRM:CE + MOVOL:500V , CAPPRM:MHLW + MOVOL:200V) + FREQ:50HZ , ((MOVOL:200V , MOVOL:460V) + CAPPRM:MHLW , (MOVOL:380V , MOVOL:460V) + CAPPRM:ASME) + FREQ:60HZ) + CAPPRE:IEC , (MOVOL:230V , MOVOL:460V , MOVOL:575V) + CAPPRE:ULCUL + CAPPRM:ASME + FREQ:60HZ) + COOL:AIR	K25
	1088 0032 17	1	RELAY 115 VAC	**(12/12/2018 - 24/02/2019)** ((((CAPPRM:AS1210 , CAPPRM:CE , CAPPRM:MHLW , CAPPRM:MOM) + MOVOL:400V , (CAPPRM:CE + MOVOL:500V , CAPPRM:MHLW + MOVOL:200V) + COOL:AIR) + FREQ:50HZ , ((COOL:AIR + MOVOL:200V , MOVOL:460V) + CAPPRM:MHLW , (MOVOL:380V , MOVOL:460V) + CAPPRM:ASME) + FREQ:60HZ) + CAPPRE:IEC , ((MOVOL:230V , MOVOL:575V) + COOL:AIR , MOVOL:460V) + CAPPRE:ULCUL + CAPPRM:ASME + FREQ:60HZ) **(25/02/2019 - 27/11/2019)** ((((CAPPRM:AS1210 , CAPPRM:CE , CAPPRM:MHLW , CAPPRM:MOM) + MOVOL:400V , CAPPRM:CE + MOVOL:500V , CAPPRM:MHLW + MOVOL:200V) + FREQ:50HZ , ((MOVOL:200V , MOVOL:460V) + CAPPRM:MHLW , (MOVOL:380V , MOVOL:460V) + CAPPRM:ASME) + FREQ:60HZ) + CAPPRE:IEC , (MOVOL:230V , MOVOL:460V , MOVOL:575V) + CAPPRE:ULCUL + CAPPRM:ASME + FREQ:60HZ) + COOL:AIR	K5

Legend:

CAPPRE:IEC - Component approval electrical:IEC
CAPPRE:ULCUL - Component approval electrical:UL/cUL
CAPPRM:AS1210 - Component approval mechanical:AS1210
CAPPRM:ASME - Component approval mechanical:ASME
CAPPRM:CE - Component approval mechanical:CE
CAPPRM:MHLW - Component approval mechanical:MHLW
CAPPRM:MOM - Component approval mechanical:MOM
COOL:AIR - Cooling:Air cooled
FREQ:50HZ - Frequency:50 Hz
FREQ:60HZ - Frequency:60 Hz
IDRY:N - Integrated dryer:No
MODEL:GA75VP_16 - Model:GA 75VSD+
MOVOL:200V - Supply voltage:200 V
MOVOL:230V - Supply voltage:230 V
MOVOL:380V - Supply voltage:380 V
MOVOL:400V - Supply voltage:400 V
MOVOL:460V - Supply voltage:460 V
MOVOL:500V - Supply voltage:500 V
MOVOL:575V - Supply voltage:575 V

21.6 - Cubicle components GA 75L VSD+ - (200V-400V-500V/50Hz - IEC, 200V-380V-460V/60Hz - IEC, 230V-460V-575V/60Hz - UL-cUL) - Pack (12/12/2018 - 27/11/2019)

((((CAPPRM:AS1210 , CAPPRM:CE , CAPPRM:MHLW , CAPPRM:MOM) + MOVOL:400V , CAPPRM:CE + COOL:AIR + MOVOL:500V) + FREQ:50HZ , ((MOVOL:380V , MOVOL:460V) + CAPPRM:ASME , CAPPRM:MHLW + MOVOL:460V) + FREQ:60HZ , CAPPRM:MHLW + COOL:AIR + MOVOL:200V) + CAPPRE:IEC , ((MOVOL:230V , MOVOL:575V) + COOL:AIR , MOVOL:460V) + CAPPRE:ULCUL + CAPPRM:ASME + FREQ:60HZ) + IDRY:N + MODEL:GA75VP_16

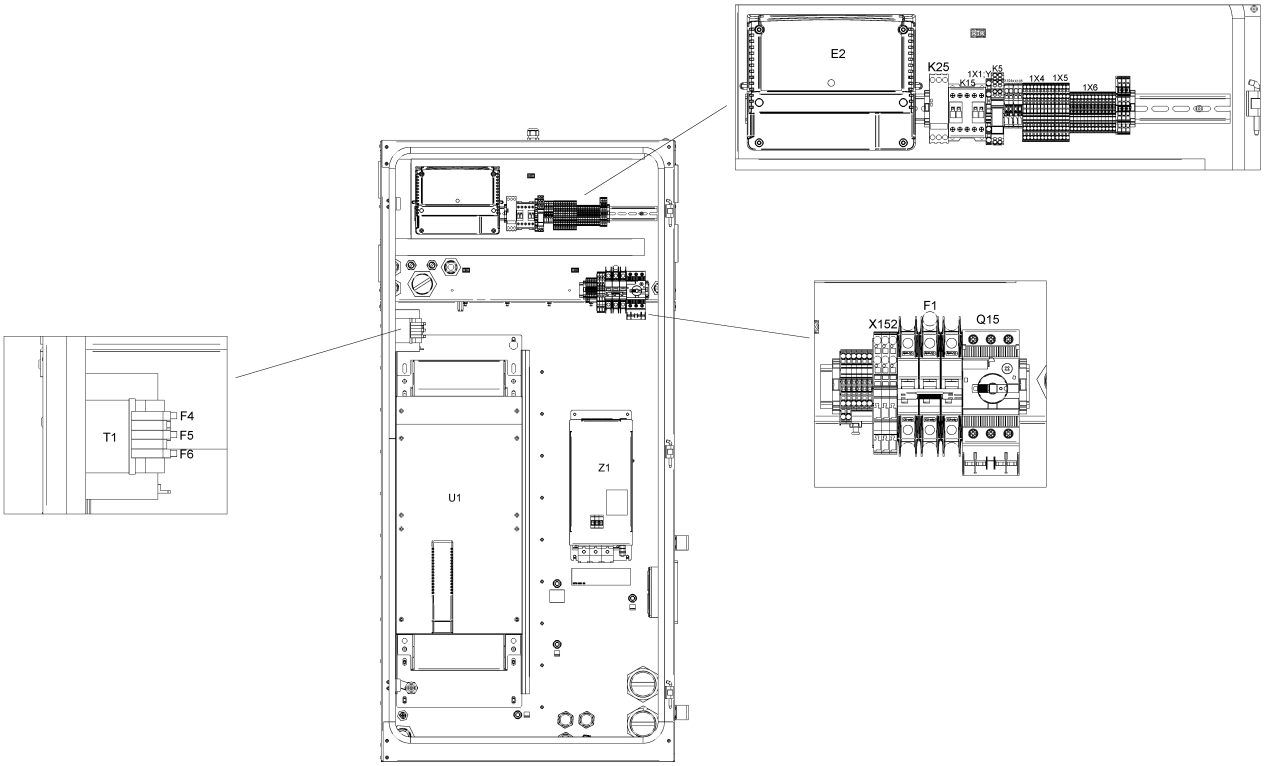

21.6 - Cubicle components GA 75L VSD+ - (200V-400V-500V/50Hz - IEC, 200V-380V-460V/60Hz - IEC, 230V-460V-575V/60Hz - UL-cUL) - Pack (12/12/2018 - 27/11/2019)

((((CAPPRM:AS1210 , CAPPRM:CE , CAPPRM:MHLW , CAPPRM:MOM) + MOVOL:400V , CAPPRM:CE + COOL:AIR + MOVOL:500V) + FREQ:50HZ , ((MOVOL:380V , MOVOL:460V) + CAPPRM:ASME , CAPPRM:MHLW + MOVOL:460V) + FREQ:60HZ , CAPPRM:MHLW + COOL:AIR + MOVOL:200V) + CAPPRE:IEC , ((MOVOL:230V , MOVOL:575V) + COOL:AIR , MOVOL:460V) + CAPPRE:ULCUL + CAPPRM:ASME + FREQ:60HZ) + IDRY:N + MODEL:GA75VP_16

Ref	Part Number	Qty	Name	Validity	EL
	0991 8011 21	AR	CABLE TRAY	**(12/12/2018 - 24/02/2019)** ((((CAPPRM:AS1210 , CAPPRM:CE , CAPPRM:MHLW , CAPPRM:MOM) + MOVOL:400V , (CAPPRM:CE + MOVOL:500V , CAPPRM:MHLW + MOVOL:200V) + COOL:AIR) + FREQ:50HZ , ((COOL:AIR + MOVOL:200V , MOVOL:460V) + CAPPRM:MHLW , (MOVOL:380V , MOVOL:460V) + CAPPRM:ASME) + FREQ:60HZ) + CAPPRE:IEC , ((MOVOL:230V , MOVOL:575V) + COOL:AIR , MOVOL:460V) + CAPPRE:ULCUL + CAPPRM:ASME + FREQ:60HZ) **(25/02/2019 - 27/11/2019)** ((((CAPPRM:AS1210 , CAPPRM:CE , CAPPRM:MHLW , CAPPRM:MOM) + MOVOL:400V , CAPPRM:CE + MOVOL:500V , CAPPRM:MHLW + MOVOL:200V) + FREQ:50HZ , ((MOVOL:200V , MOVOL:460V) + CAPPRM:MHLW , (MOVOL:380V , MOVOL:460V) + CAPPRM:ASME) + FREQ:60HZ) + CAPPRE:IEC , (MOVOL:230V , MOVOL:460V , MOVOL:575V) + CAPPRE:ULCUL + CAPPRM:ASME + FREQ:60HZ) + COOL:AIR	L=1384mm
	0697 9811 16	1	PLUG	**(12/12/2018 - 24/02/2019)** ((((CAPPRM:AS1210 , CAPPRM:CE , CAPPRM:MHLW , CAPPRM:MOM) + MOVOL:400V , (CAPPRM:CE + MOVOL:500V , CAPPRM:MHLW + MOVOL:200V) + COOL:AIR) + FREQ:50HZ , ((COOL:AIR + MOVOL:200V , MOVOL:460V) + CAPPRM:MHLW , (MOVOL:380V , MOVOL:460V) + CAPPRM:ASME) + FREQ:60HZ) + CAPPRE:IEC , ((MOVOL:230V , MOVOL:575V) + COOL:AIR , MOVOL:460V) + CAPPRE:ULCUL + CAPPRM:ASME + FREQ:60HZ) **(25/02/2019 - 27/11/2019)** ((((CAPPRM:AS1210 , CAPPRM:CE , CAPPRM:MHLW , CAPPRM:MOM) + MOVOL:400V , CAPPRM:CE + MOVOL:500V , CAPPRM:MHLW + MOVOL:200V) + FREQ:50HZ , ((MOVOL:200V , MOVOL:460V) + CAPPRM:MHLW , (MOVOL:380V , MOVOL:460V) + CAPPRM:ASME) + FREQ:60HZ) + CAPPRE:IEC , (MOVOL:230V , MOVOL:460V , MOVOL:575V) + CAPPRE:ULCUL + CAPPRM:ASME + FREQ:60HZ) + COOL:AIR	
	Electrical legend:	Plug for Dryer			
	0989 3700 47	1	LOCKNUT	**(12/12/2018 - 24/02/2019)** ((((CAPPRM:AS1210 , CAPPRM:CE , CAPPRM:MHLW , CAPPRM:MOM) + MOVOL:400V , (CAPPRM:CE + MOVOL:500V , CAPPRM:MHLW + MOVOL:200V) + COOL:AIR) + FREQ:50HZ , ((COOL:AIR + MOVOL:200V , MOVOL:460V) + CAPPRM:MHLW , (MOVOL:380V , MOVOL:460V) + CAPPRM:ASME) + FREQ:60HZ) + CAPPRE:IEC , ((MOVOL:230V , MOVOL:575V) + COOL:AIR , MOVOL:460V) + CAPPRE:ULCUL + CAPPRM:ASME + FREQ:60HZ) **(25/02/2019 - 27/11/2019)** ((((CAPPRM:AS1210 , CAPPRM:CE , CAPPRM:MHLW , CAPPRM:MOM) + MOVOL:400V , CAPPRM:CE + MOVOL:500V , CAPPRM:MHLW + MOVOL:200V) + FREQ:50HZ , ((MOVOL:200V , MOVOL:460V) + CAPPRM:MHLW , (MOVOL:380V , MOVOL:460V) + CAPPRM:ASME) + FREQ:60HZ) + CAPPRE:IEC , (MOVOL:230V , MOVOL:460V , MOVOL:575V) + CAPPRE:ULCUL + CAPPRM:ASME + FREQ:60HZ) + COOL:AIR	
	Electrical legend:	Locknut for dryer			

Legend:

CAPPRE:IEC - Component approval electrical:IEC
CAPPRE:ULCUL - Component approval electrical:UL/cUL
CAPPRM:AS1210 - Component approval mechanical:AS1210
CAPPRM:ASME - Component approval mechanical:ASME
CAPPRM:CE - Component approval mechanical:CE
CAPPRM:MHLW - Component approval mechanical:MHLW
CAPPRM:MOM - Component approval mechanical:MOM
COOL:AIR - Cooling:Air cooled
FREQ:50HZ - Frequency:50 Hz
FREQ:60HZ - Frequency:60 Hz
IDRY:N - Integrated dryer:No
MODEL:GA75VP_16 - Model:GA 75VSD+
MOVOL:200V - Supply voltage:200 V
MOVOL:230V - Supply voltage:230 V
MOVOL:380V - Supply voltage:380 V
MOVOL:400V - Supply voltage:400 V
MOVOL:460V - Supply voltage:460 V
MOVOL:500V - Supply voltage:500 V
MOVOL:575V - Supply voltage:575 V

21.6 - Cubicle components GA 75L VSD+ - (200V-400V-500V/50Hz - IEC, 200V-380V-460V/60Hz - IEC, 230V-460V-575V/60Hz - UL-cUL) - Pack (12/12/2018 - 27/11/2019)

((((CAPPRM:AS1210 , CAPPRM:CE , CAPPRM:MHLW , CAPPRM:MOM) + MOVOL:400V , CAPPRM:CE + COOL:AIR + MOVOL:500V) + FREQ:50HZ , ((MOVOL:380V , MOVOL:460V) + CAPPRM:ASME , CAPPRM:MHLW + MOVOL:460V) + FREQ:60HZ , CAPPRM:MHLW + COOL:AIR + MOVOL:200V) + CAPPRE:IEC , ((MOVOL:230V , MOVOL:575V) + COOL:AIR , MOVOL:460V) + CAPPRE:ULCUL + CAPPRM:ASME + FREQ:60HZ) + IDRY:N + MODEL:GA75VP_16

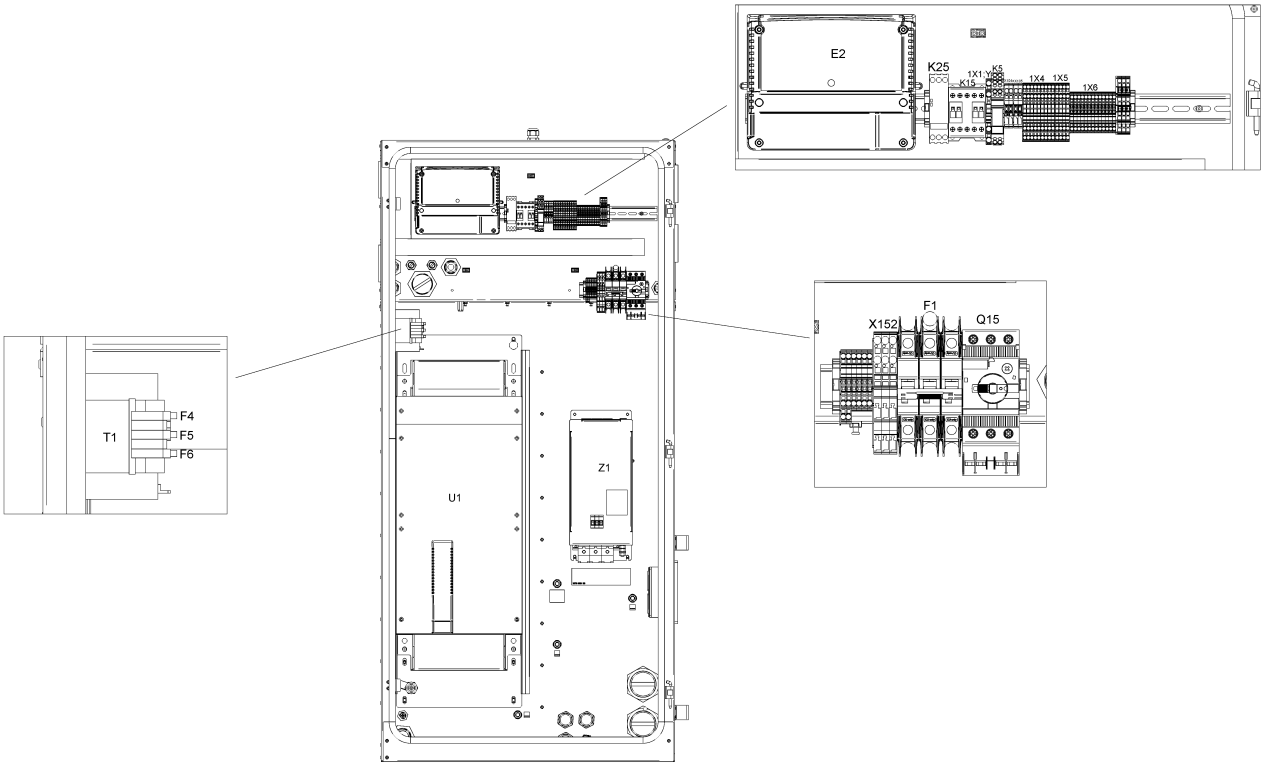

21.6 - Cubicle components GA 75L VSD+ - (200V-400V-500V/50Hz - IEC, 200V-380V-460V/60Hz - IEC, 230V-460V-575V/60Hz - UL-cUL) - Pack (12/12/2018 - 27/11/2019)

((((CAPPRM:AS1210 , CAPPRM:CE , CAPPRM:MHLW , CAPPRM:MOM) + MOVOL:400V , CAPPRM:CE + COOL:AIR + MOVOL:500V) + FREQ:50HZ , ((MOVOL:380V , MOVOL:460V) + CAPPRM:ASME , CAPPRM:MHLW + MOVOL:460V) + FREQ:60HZ , CAPPRM:MHLW + COOL:AIR + MOVOL:200V) + CAPPRE:IEC , ((MOVOL:230V , MOVOL:575V) + COOL:AIR , MOVOL:460V) + CAPPRE:ULCUL + CAPPRM:ASME + FREQ:60HZ) + IDRY:N + MODEL:GA75VP_16

Ref	Part Number	Qty	Name	Validity	EL
	0697 9811 11	2	PLUG	**(12/12/2018 - 24/02/2019)** ((((CAPPRM:AS1210 , CAPPRM:CE , CAPPRM:MHLW , CAPPRM:MOM) + MOVOL:400V , (CAPPRM:CE + MOVOL:500V , CAPPRM:MHLW + MOVOL:200V) + COOL:AIR) + FREQ:50HZ , ((COOL:AIR + MOVOL:200V , MOVOL:460V) + CAPPRM:MHLW , (MOVOL:380V , MOVOL:460V) + CAPPRM:ASME) + FREQ:60HZ) + CAPPRE:IEC , ((MOVOL:230V , MOVOL:575V) + COOL:AIR , MOVOL:460V) + CAPPRE:ULCUL + CAPPRM:ASME + FREQ:60HZ) **(25/02/2019 - 27/11/2019)** ((((CAPPRM:AS1210 , CAPPRM:CE , CAPPRM:MHLW , CAPPRM:MOM) + MOVOL:400V , CAPPRM:CE + MOVOL:500V , CAPPRM:MHLW + MOVOL:200V) + FREQ:50HZ , ((MOVOL:200V , MOVOL:460V) + CAPPRM:MHLW , (MOVOL:380V , MOVOL:460V) + CAPPRM:ASME) + FREQ:60HZ) + CAPPRE:IEC , (MOVOL:230V , MOVOL:460V , MOVOL:575V) + CAPPRE:ULCUL + CAPPRM:ASME + FREQ:60HZ) + COOL:AIR	
Electrical legend:		Plug for FF Drain/LAT			
	0989 3700 42	2	NUT	**(12/12/2018 - 24/02/2019)** ((((CAPPRM:AS1210 , CAPPRM:CE , CAPPRM:MHLW , CAPPRM:MOM) + MOVOL:400V , (CAPPRM:CE + MOVOL:500V , CAPPRM:MHLW + MOVOL:200V) + COOL:AIR) + FREQ:50HZ , ((COOL:AIR + MOVOL:200V , MOVOL:460V) + CAPPRM:MHLW , (MOVOL:380V , MOVOL:460V) + CAPPRM:ASME) + FREQ:60HZ) + CAPPRE:IEC , ((MOVOL:230V , MOVOL:575V) + COOL:AIR , MOVOL:460V) + CAPPRE:ULCUL + CAPPRM:ASME + FREQ:60HZ) **(25/02/2019 - 27/11/2019)** ((((CAPPRM:AS1210 , CAPPRM:CE , CAPPRM:MHLW , CAPPRM:MOM) + MOVOL:400V , CAPPRM:CE + MOVOL:500V , CAPPRM:MHLW + MOVOL:200V) + FREQ:50HZ , ((MOVOL:200V , MOVOL:460V) + CAPPRM:MHLW , (MOVOL:380V , MOVOL:460V) + CAPPRM:ASME) + FREQ:60HZ) + CAPPRE:IEC , (MOVOL:230V , MOVOL:460V , MOVOL:575V) + CAPPRE:ULCUL + CAPPRM:ASME + FREQ:60HZ) + COOL:AIR	
Electrical legend:		Locknut for FF Drain/LAT			
	1088 0031 13	1	CONNECTOR 13-POLE	**(12/12/2018 - 24/02/2019)** ((((CAPPRM:AS1210 , CAPPRM:CE , CAPPRM:MHLW , CAPPRM:MOM) + MOVOL:400V , (CAPPRM:CE + MOVOL:500V , CAPPRM:MHLW + MOVOL:200V) + COOL:AIR) + FREQ:50HZ , ((COOL:AIR + MOVOL:200V , MOVOL:460V) + CAPPRM:MHLW , (MOVOL:380V , MOVOL:460V) + CAPPRM:ASME) + FREQ:60HZ) + CAPPRE:IEC , ((MOVOL:230V , MOVOL:575V) + COOL:AIR , MOVOL:460V) + CAPPRE:ULCUL + CAPPRM:ASME + FREQ:60HZ) **(25/02/2019 - 27/11/2019)** ((((CAPPRM:AS1210 , CAPPRM:CE , CAPPRM:MHLW , CAPPRM:MOM) + MOVOL:400V , CAPPRM:CE + MOVOL:500V , CAPPRM:MHLW + MOVOL:200V) + FREQ:50HZ , ((MOVOL:200V , MOVOL:460V) + CAPPRM:MHLW , (MOVOL:380V , MOVOL:460V) + CAPPRM:ASME) + FREQ:60HZ) + CAPPRE:IEC , (MOVOL:230V , MOVOL:460V , MOVOL:575V) + CAPPRE:ULCUL + CAPPRM:ASME + FREQ:60HZ) + COOL:AIR	1X30

Legend:

CAPPRE:IEC - Component approval electrical:IEC
CAPPRM:ASME - Component approval mechanical:ASME
CAPPRM:MOM - Component approval mechanical:MOM
FREQ:60HZ - Frequency:60 Hz
MOVOL:200V - Supply voltage:200 V
MOVOL:400V - Supply voltage:400 V
MOVOL:575V - Supply voltage:575 V
CAPPRE:ULCUL - Component approval electrical:UL/cUL
CAPPRM:CE - Component approval mechanical:CE
COOL:AIR - Cooling:Air cooled
IDRY:N - Integrated dryer:No
MOVOL:230V - Supply voltage:230 V
MOVOL:460V - Supply voltage:460 V
CAPPRM:AS1210 - Component approval mechanical:AS1210
CAPPRM:MHLW - Component approval mechanical:MHLW
FREQ:50HZ - Frequency:50 Hz
MODEL:GA75VP_16 - Model:GA 75VSD+
MOVOL:380V - Supply voltage:380 V
MOVOL:500V - Supply voltage:500 V

21.6 - Cubicle components GA 75L VSD+ - (200V-400V-500V/50Hz - IEC, 200V-380V-460V/60Hz - IEC, 230V-460V-575V/60Hz - UL-cUL) - Pack (12/12/2018 - 27/11/2019)

((((CAPPRM:AS1210 , CAPPRM:CE , CAPPRM:MHLW , CAPPRM:MOM) + MOVOL:400V , CAPPRM:CE + COOL:AIR + MOVOL:500V) + FREQ:50HZ , ((MOVOL:380V , MOVOL:460V) + CAPPRM:ASME , CAPPRM:MHLW + MOVOL:460V) + FREQ:60HZ , CAPPRM:MHLW + COOL:AIR + MOVOL:200V) + CAPPRE:IEC , ((MOVOL:230V , MOVOL:575V) + COOL:AIR , MOVOL:460V) + CAPPRE:ULCUL + CAPPRM:ASME + FREQ:60HZ) + IDRY:N + MODEL:GA75VP_16

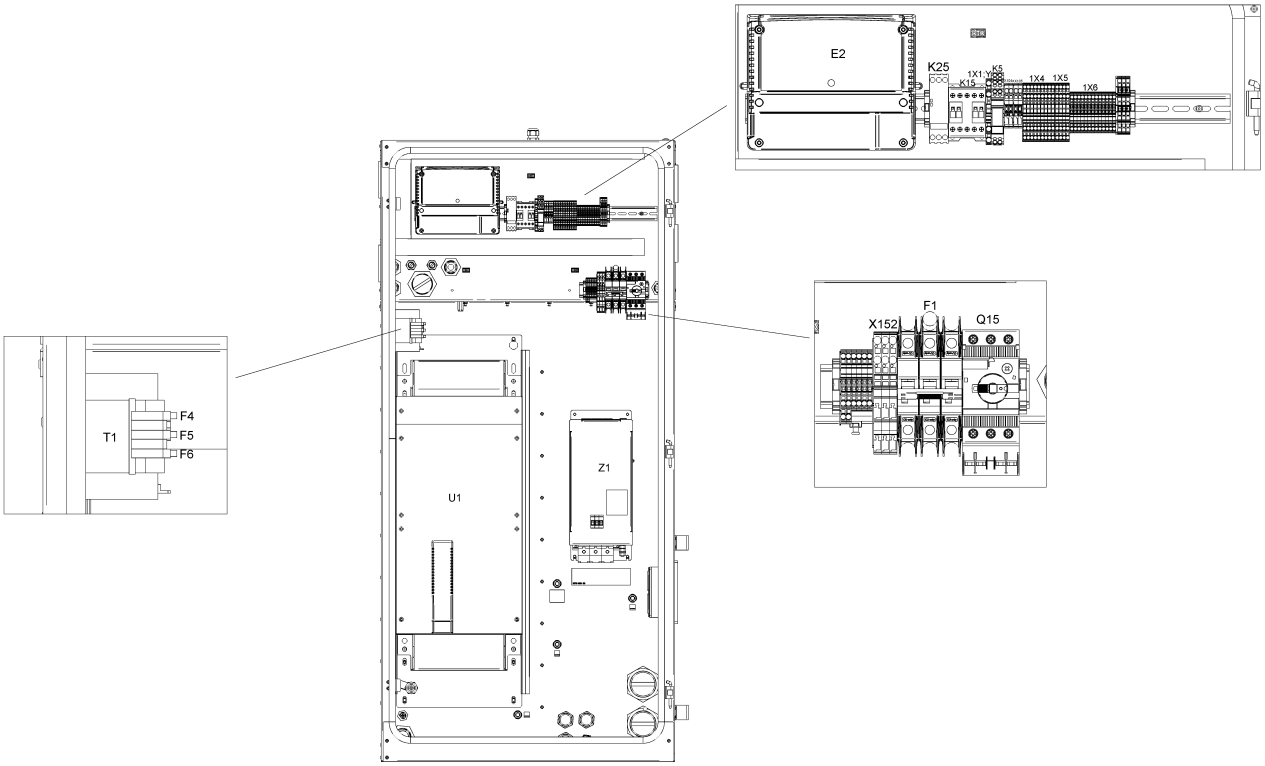

21.6 - Cubicle components GA 75L VSD+ - (200V-400V-500V/50Hz - IEC, 200V-380V-460V/60Hz - IEC, 230V-460V-575V/60Hz - UL-cUL) - Pack (12/12/2018 - 27/11/2019)

((((CAPPRM:AS1210 , CAPPRM:CE , CAPPRM:MHLW , CAPPRM:MOM) + MOVOL:400V , CAPPRM:CE + COOL:AIR + MOVOL:500V) + FREQ:50HZ , ((MOVOL:380V , MOVOL:460V) + CAPPRM:ASME , CAPPRM:MHLW + MOVOL:460V) + FREQ:60HZ , CAPPRM:MHLW + COOL:AIR + MOVOL:200V) + CAPPRE:IEC , ((MOVOL:230V , MOVOL:575V) + COOL:AIR , MOVOL:460V) + CAPPRE:ULCUL + CAPPRM:ASME + FREQ:60HZ) + IDRY:N + MODEL:GA75VP_16

Ref	Part Number	Qty	Name	Validity	EL
	1088 0037 82	1	CONNECTOR	**(12/12/2018 - 24/02/2019)** ((((CAPPRM:AS1210 , CAPPRM:CE , CAPPRM:MHLW , CAPPRM:MOM) + MOVOL:400V , (CAPPRM:CE + MOVOL:500V , CAPPRM:MHLW + MOVOL:200V) + COOL:AIR) + FREQ:50HZ , ((COOL:AIR + MOVOL:200V , MOVOL:460V) + CAPPRM:MHLW , (MOVOL:380V , MOVOL:460V) + CAPPRM:ASME) + FREQ:60HZ) + CAPPRE:IEC , ((MOVOL:230V , MOVOL:575V) + COOL:AIR , MOVOL:460V) + CAPPRE:ULCUL + CAPPRM:ASME + FREQ:60HZ) **(25/02/2019 - 27/11/2019)** ((((CAPPRM:AS1210 , CAPPRM:CE , CAPPRM:MHLW , CAPPRM:MOM) + MOVOL:400V , CAPPRM:CE + MOVOL:500V , CAPPRM:MHLW + MOVOL:200V) + FREQ:50HZ , ((MOVOL:200V , MOVOL:460V) + CAPPRM:MHLW , (MOVOL:380V , MOVOL:460V) + CAPPRM:ASME) + FREQ:60HZ) + CAPPRE:IEC , (MOVOL:230V , MOVOL:460V , MOVOL:575V) + CAPPRE:ULCUL + CAPPRM:ASME + FREQ:60HZ) + COOL:AIR	3X34
	0697 9811 13	1	PLUG	**(12/12/2018 - 24/02/2019)** ((((CAPPRM:AS1210 , CAPPRM:CE , CAPPRM:MHLW , CAPPRM:MOM) + MOVOL:400V , (CAPPRM:CE + MOVOL:500V , CAPPRM:MHLW + MOVOL:200V) + COOL:AIR) + FREQ:50HZ , ((COOL:AIR + MOVOL:200V , MOVOL:460V) + CAPPRM:MHLW , (MOVOL:380V , MOVOL:460V) + CAPPRM:ASME) + FREQ:60HZ) + CAPPRE:IEC , ((MOVOL:230V , MOVOL:575V) + COOL:AIR , MOVOL:460V) + CAPPRE:ULCUL + CAPPRM:ASME + FREQ:60HZ) **(25/02/2019 - 27/11/2019)** ((((CAPPRM:AS1210 , CAPPRM:CE , CAPPRM:MHLW , CAPPRM:MOM) + MOVOL:400V , CAPPRM:CE + MOVOL:500V , CAPPRM:MHLW + MOVOL:200V) + FREQ:50HZ , ((MOVOL:200V , MOVOL:460V) + CAPPRM:MHLW , (MOVOL:380V , MOVOL:460V) + CAPPRM:ASME) + FREQ:60HZ) + CAPPRE:IEC , (MOVOL:230V , MOVOL:460V , MOVOL:575V) + CAPPRE:ULCUL + CAPPRM:ASME + FREQ:60HZ) + COOL:AIR	
	Electrical legend:	Energy recovery			
	0989 3700 44	1	LOCKNUT	**(12/12/2018 - 24/02/2019)** ((((CAPPRM:AS1210 , CAPPRM:CE , CAPPRM:MHLW , CAPPRM:MOM) + MOVOL:400V , (CAPPRM:CE + MOVOL:500V , CAPPRM:MHLW + MOVOL:200V) + COOL:AIR) + FREQ:50HZ , ((COOL:AIR + MOVOL:200V , MOVOL:460V) + CAPPRM:MHLW , (MOVOL:380V , MOVOL:460V) + CAPPRM:ASME) + FREQ:60HZ) + CAPPRE:IEC , ((MOVOL:230V , MOVOL:575V) + COOL:AIR , MOVOL:460V) + CAPPRE:ULCUL + CAPPRM:ASME + FREQ:60HZ) **(25/02/2019 - 27/11/2019)** ((((CAPPRM:AS1210 , CAPPRM:CE , CAPPRM:MHLW , CAPPRM:MOM) + MOVOL:400V , CAPPRM:CE + MOVOL:500V , CAPPRM:MHLW + MOVOL:200V) + FREQ:50HZ , ((MOVOL:200V , MOVOL:460V) + CAPPRM:MHLW , (MOVOL:380V , MOVOL:460V) + CAPPRM:ASME) + FREQ:60HZ) + CAPPRE:IEC , (MOVOL:230V , MOVOL:460V , MOVOL:575V) + CAPPRE:ULCUL + CAPPRM:ASME + FREQ:60HZ) + COOL:AIR	
	Electrical legend:	Energy recovery			

Legend:

CAPPRE:IEC - Component approval electrical:IEC
CAPPRE:ULCUL - Component approval electrical:UL/cUL
CAPPRM:AS1210 - Component approval mechanical:AS1210
CAPPRM:ASME - Component approval mechanical:ASME
CAPPRM:CE - Component approval mechanical:CE
CAPPRM:MHLW - Component approval mechanical:MHLW
CAPPRM:MOM - Component approval mechanical:MOM
COOL:AIR - Cooling:Air cooled
FREQ:50HZ - Frequency:50 Hz
FREQ:60HZ - Frequency:60 Hz
IDRY:N - Integrated dryer:No
MODEL:GA75VP_16 - Model:GA 75VSD+
MOVOL:200V - Supply voltage:200 V
MOVOL:230V - Supply voltage:230 V
MOVOL:380V - Supply voltage:380 V
MOVOL:400V - Supply voltage:400 V
MOVOL:460V - Supply voltage:460 V
MOVOL:500V - Supply voltage:500 V
MOVOL:575V - Supply voltage:575 V

21.6 - Cubicle components GA 75L VSD+ - (200V-400V-500V/50Hz - IEC, 200V-380V-460V/60Hz - IEC, 230V-460V-575V/60Hz - UL-cUL) - Pack (12/12/2018 - 27/11/2019)

((((CAPPRM:AS1210 , CAPPRM:CE , CAPPRM:MHLW , CAPPRM:MOM) + MOVOL:400V , CAPPRM:CE + COOL:AIR + MOVOL:500V) + FREQ:50HZ , ((MOVOL:380V , MOVOL:460V) + CAPPRM:ASME , CAPPRM:MHLW + MOVOL:460V) + FREQ:60HZ , CAPPRM:MHLW + COOL:AIR + MOVOL:200V) + CAPPRE:IEC , ((MOVOL:230V , MOVOL:575V) + COOL:AIR , MOVOL:460V) + CAPPRE:ULCUL + CAPPRM:ASME + FREQ:60HZ) + IDRY:N + MODEL:GA75VP_16

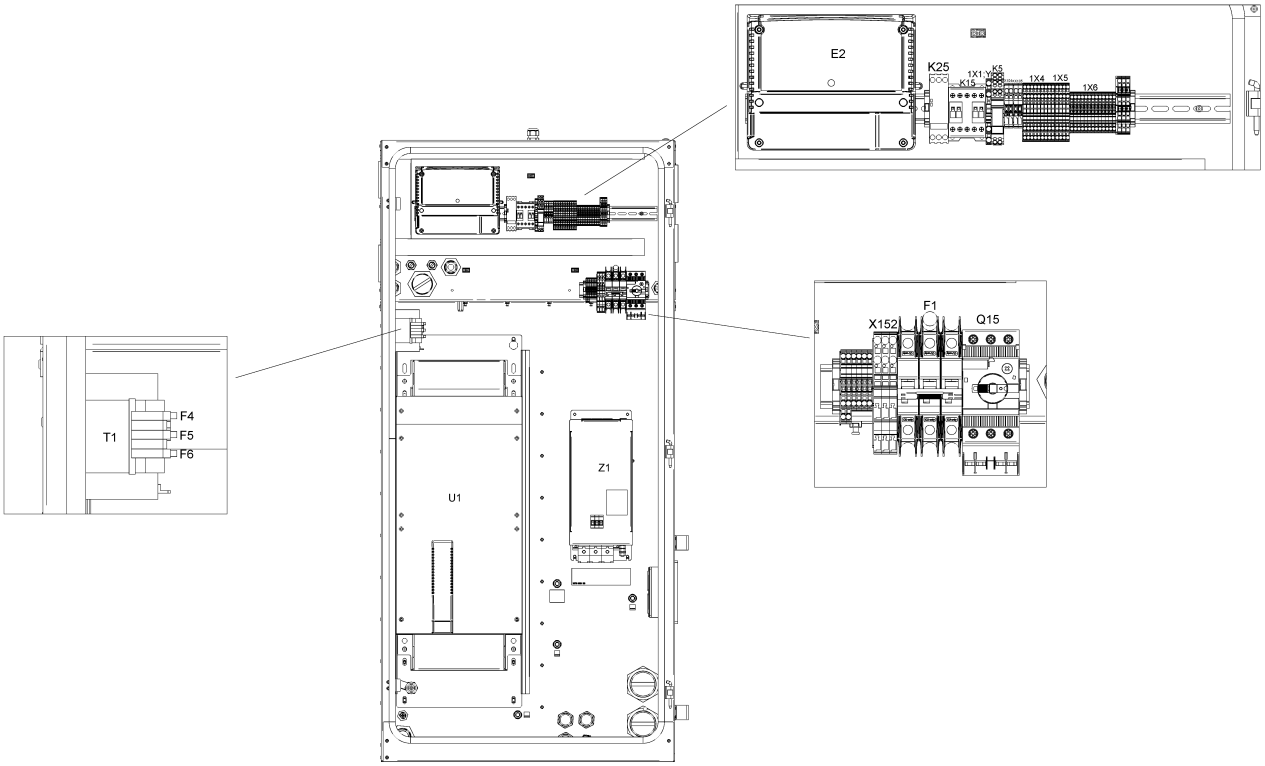

21.6 - Cubicle components GA 75L VSD+ - (200V-400V-500V/50Hz - IEC, 200V-380V-460V/60Hz - IEC, 230V-460V-575V/60Hz - UL-cUL) - Pack (12/12/2018 - 27/11/2019)

((((CAPPRM:AS1210 , CAPPRM:CE , CAPPRM:MHLW , CAPPRM:MOM) + MOVOL:400V , CAPPRM:CE + COOL:AIR + MOVOL:500V) + FREQ:50HZ , ((MOVOL:380V , MOVOL:460V) + CAPPRM:ASME , CAPPRM:MHLW + MOVOL:460V) + FREQ:60HZ , CAPPRM:MHLW + COOL:AIR + MOVOL:200V) + CAPPRE:IEC , ((MOVOL:230V , MOVOL:575V) + COOL:AIR , MOVOL:460V) + CAPPRE:ULCUL + CAPPRM:ASME + FREQ:60HZ) + IDRY:N + MODEL:GA75VP_16

Ref	Part Number	Qty	Name	Validity	EL
	0697 9811 12	1	PLUG	**(12/12/2018 - 24/02/2019)** ((((CAPPRM:AS1210 , CAPPRM:CE , CAPPRM:MHLW , CAPPRM:MOM) + MOVOL:400V , (CAPPRM:CE + MOVOL:500V , CAPPRM:MHLW + MOVOL:200V) + COOL:AIR) + FREQ:50HZ , ((COOL:AIR + MOVOL:200V , MOVOL:460V) + CAPPRM:MHLW , (MOVOL:380V , MOVOL:460V) + CAPPRM:ASME) + FREQ:60HZ) + CAPPRE:IEC , ((MOVOL:230V , MOVOL:575V) + COOL:AIR , MOVOL:460V) + CAPPRE:ULCUL + CAPPRM:ASME + FREQ:60HZ) **(25/02/2019 - 27/11/2019)** ((((CAPPRM:AS1210 , CAPPRM:CE , CAPPRM:MHLW , CAPPRM:MOM) + MOVOL:400V , CAPPRM:CE + MOVOL:500V , CAPPRM:MHLW + MOVOL:200V) + FREQ:50HZ , ((MOVOL:200V , MOVOL:460V) + CAPPRM:MHLW , (MOVOL:380V , MOVOL:460V) + CAPPRM:ASME) + FREQ:60HZ) + CAPPRE:IEC , (MOVOL:230V , MOVOL:460V , MOVOL:575V) + CAPPRE:ULCUL + CAPPRM:ASME + FREQ:60HZ) + COOL:AIR	
	Electrical legend:	Control circuit of T10			
	0989 3700 43	1	NUT	**(12/12/2018 - 24/02/2019)** ((((CAPPRM:AS1210 , CAPPRM:CE , CAPPRM:MHLW , CAPPRM:MOM) + MOVOL:400V , (CAPPRM:CE + MOVOL:500V , CAPPRM:MHLW + MOVOL:200V) + COOL:AIR) + FREQ:50HZ , ((COOL:AIR + MOVOL:200V , MOVOL:460V) + CAPPRM:MHLW , (MOVOL:380V , MOVOL:460V) + CAPPRM:ASME) + FREQ:60HZ) + CAPPRE:IEC , ((MOVOL:230V , MOVOL:575V) + COOL:AIR , MOVOL:460V) + CAPPRE:ULCUL + CAPPRM:ASME + FREQ:60HZ) **(25/02/2019 - 27/11/2019)** ((((CAPPRM:AS1210 , CAPPRM:CE , CAPPRM:MHLW , CAPPRM:MOM) + MOVOL:400V , CAPPRM:CE + MOVOL:500V , CAPPRM:MHLW + MOVOL:200V) + FREQ:50HZ , ((MOVOL:200V , MOVOL:460V) + CAPPRM:MHLW , (MOVOL:380V , MOVOL:460V) + CAPPRM:ASME) + FREQ:60HZ) + CAPPRE:IEC , (MOVOL:230V , MOVOL:460V , MOVOL:575V) + CAPPRE:ULCUL + CAPPRM:ASME + FREQ:60HZ) + COOL:AIR	
	Electrical legend:	Control circuit of T10			
	0697 9811 10	1	PLUG	**(12/12/2018 - 24/02/2019)** ((((CAPPRM:AS1210 , CAPPRM:CE , CAPPRM:MHLW , CAPPRM:MOM) + MOVOL:400V , (CAPPRM:CE + MOVOL:500V , CAPPRM:MHLW + MOVOL:200V) + COOL:AIR) + FREQ:50HZ , ((COOL:AIR + MOVOL:200V , MOVOL:460V) + CAPPRM:MHLW , (MOVOL:380V , MOVOL:460V) + CAPPRM:ASME) + FREQ:60HZ) + CAPPRE:IEC , ((MOVOL:230V , MOVOL:575V) + COOL:AIR , MOVOL:460V) + CAPPRE:ULCUL + CAPPRM:ASME + FREQ:60HZ) **(25/02/2019 - 27/11/2019)** ((((CAPPRM:AS1210 , CAPPRM:CE , CAPPRM:MHLW , CAPPRM:MOM) + MOVOL:400V , CAPPRM:CE + MOVOL:500V , CAPPRM:MHLW + MOVOL:200V) + FREQ:50HZ , ((MOVOL:200V , MOVOL:460V) + CAPPRM:MHLW , (MOVOL:380V , MOVOL:460V) + CAPPRM:ASME) + FREQ:60HZ) + CAPPRE:IEC , (MOVOL:230V , MOVOL:460V , MOVOL:575V) + CAPPRE:ULCUL + CAPPRM:ASME + FREQ:60HZ) + COOL:AIR	
	Electrical legend:	Plug for smartbox hole			

Legend:

CAPPRE:IEC - Component approval electrical:IEC
CAPPRM:ASME - Component approval mechanical:ASME
CAPPRM:MOM - Component approval mechanical:MOM
FREQ:60HZ - Frequency:60 Hz
MOVOL:200V - Supply voltage:200 V
MOVOL:400V - Supply voltage:400 V
MOVOL:575V - Supply voltage:575 V
CAPPRE:ULCUL - Component approval electrical:UL/cUL
CAPPRM:CE - Component approval mechanical:CE
COOL:AIR - Cooling:Air cooled
IDRY:N - Integrated dryer:No
MOVOL:230V - Supply voltage:230 V
MOVOL:460V - Supply voltage:460 V
CAPPRM:AS1210 - Component approval mechanical:AS1210
CAPPRM:MHLW - Component approval mechanical:MHLW
FREQ:50HZ - Frequency:50 Hz
MODEL:GA75VP_16 - Model:GA 75VSD+
MOVOL:380V - Supply voltage:380 V
MOVOL:500V - Supply voltage:500 V

21.6 - Cubicle components GA 75L VSD+ - (200V-400V-500V/50Hz - IEC, 200V-380V-460V/60Hz - IEC, 230V-460V-575V/60Hz - UL-cUL) - Pack (12/12/2018 - 27/11/2019)

((((CAPPRM:AS1210 , CAPPRM:CE , CAPPRM:MHLW , CAPPRM:MOM) + MOVOL:400V , CAPPRM:CE + COOL:AIR + MOVOL:500V) + FREQ:50HZ , ((MOVOL:380V , MOVOL:460V) + CAPPRM:ASME , CAPPRM:MHLW + MOVOL:460V) + FREQ:60HZ , CAPPRM:MHLW + COOL:AIR + MOVOL:200V) + CAPPRE:IEC , ((MOVOL:230V , MOVOL:575V) + COOL:AIR , MOVOL:460V) + CAPPRE:ULCUL + CAPPRM:ASME + FREQ:60HZ) + IDRY:N + MODEL:GA75VP_16

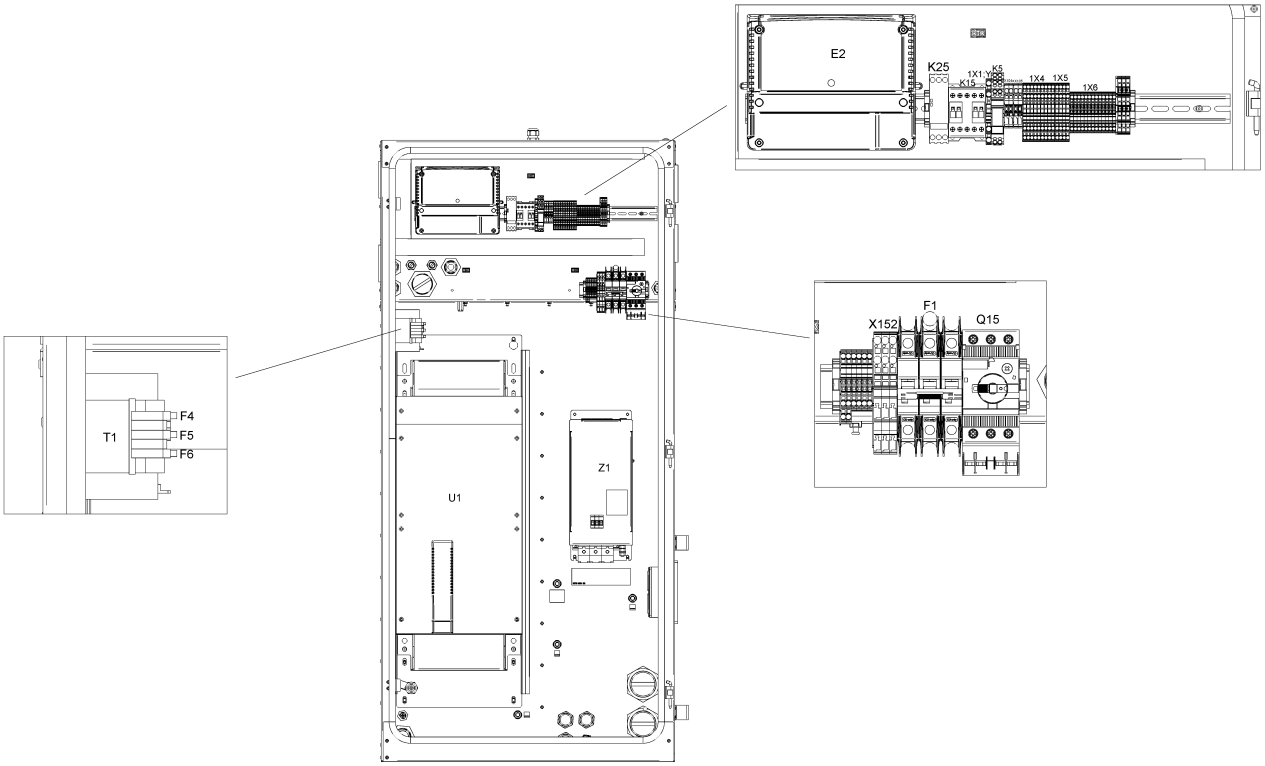

21.6 - Cubicle components GA 75L VSD+ - (200V-400V-500V/50Hz - IEC, 200V-380V-460V/60Hz - IEC, 230V-460V-575V/60Hz - UL-cUL) - Pack (12/12/2018 - 27/11/2019)

((((CAPPRM:AS1210 , CAPPRM:CE , CAPPRM:MHLW , CAPPRM:MOM) + MOVOL:400V , CAPPRM:CE + COOL:AIR + MOVOL:500V) + FREQ:50HZ , ((MOVOL:380V , MOVOL:460V) + CAPPRM:ASME , CAPPRM:MHLW + MOVOL:460V) + FREQ:60HZ , CAPPRM:MHLW + COOL:AIR + MOVOL:200V) + CAPPRE:IEC , ((MOVOL:230V , MOVOL:575V) + COOL:AIR , MOVOL:460V) + CAPPRE:ULCUL + CAPPRM:ASME + FREQ:60HZ) + IDRY:N + MODEL:GA75VP_16

Ref	Part Number	Qty	Name	Validity	EL
	0989 3700 41	1	LOCKNUT	**(12/12/2018 - 24/02/2019)** ((((CAPPRM:AS1210 , CAPPRM:CE , CAPPRM:MHLW , CAPPRM:MOM) + MOVOL:400V , (CAPPRM:CE + MOVOL:500V , CAPPRM:MHLW + MOVOL:200V) + COOL:AIR) + FREQ:50HZ , ((COOL:AIR + MOVOL:200V , MOVOL:460V) + CAPPRM:MHLW , (MOVOL:380V , MOVOL:460V) + CAPPRM:ASME) + FREQ:60HZ) + CAPPRE:IEC , ((MOVOL:230V , MOVOL:575V) + COOL:AIR , MOVOL:460V) + CAPPRE:ULCUL + CAPPRM:ASME + FREQ:60HZ) **(25/02/2019 - 27/11/2019)** ((((CAPPRM:AS1210 , CAPPRM:CE , CAPPRM:MHLW , CAPPRM:MOM) + MOVOL:400V , CAPPRM:CE + MOVOL:500V , CAPPRM:MHLW + MOVOL:200V) + FREQ:50HZ , ((MOVOL:200V , MOVOL:460V) + CAPPRM:MHLW , (MOVOL:380V , MOVOL:460V) + CAPPRM:ASME) + FREQ:60HZ) + CAPPRE:IEC , (MOVOL:230V , MOVOL:460V , MOVOL:575V) + CAPPRE:ULCUL + CAPPRM:ASME + FREQ:60HZ) + COOL:AIR	
	Electrical legend:	Nut for smartbox hole			

Legend:

CAPPRE:IEC - Component approval electrical:IEC
CAPPRE:ULCUL - Component approval electrical:UL/cUL
CAPPRM:AS1210 - Component approval mechanical:AS1210
CAPPRM:ASME - Component approval mechanical:ASME
CAPPRM:CE - Component approval mechanical:CE
CAPPRM:MHLW - Component approval mechanical:MHLW
CAPPRM:MOM - Component approval mechanical:MOM
COOL:AIR - Cooling:Air cooled
FREQ:50HZ - Frequency:50 Hz
FREQ:60HZ - Frequency:60 Hz
IDRY:N - Integrated dryer:No
MODEL:GA75VP_16 - Model:GA 75VSD+
MOVOL:200V - Supply voltage:200 V
MOVOL:230V - Supply voltage:230 V
MOVOL:380V - Supply voltage:380 V
MOVOL:400V - Supply voltage:400 V
MOVOL:460V - Supply voltage:460 V
MOVOL:500V - Supply voltage:500 V
MOVOL:575V - Supply voltage:575 V

21.7 - Cubicle components GA 75L VSD+ - (200V-400V-500V/50Hz - IEC, 200V-380V-460V/60Hz - IEC, 230V-460V-575V/60Hz - UL-cUL) - Pack (28/11/2019 - ...)

((((CAPPRM:AS1210 , CAPPRM:CE , CAPPRM:MHLW , CAPPRM:MOM) + MOVOL:400V , CAPPRM:CE + COOL:AIR + MOVOL:500V) + FREQ:50HZ , ((MOVOL:380V , MOVOL:460V) + CAPPRM:ASME , CAPPRM:MHLW + MOVOL:460V) + FREQ:60HZ , CAPPRM:MHLW + COOL:AIR + MOVOL:200V) + CAPPRE:IEC , ((MOVOL:230V , MOVOL:575V) + COOL:AIR , MOVOL:460V) + CAPPRE:ULCUL + CAPPRM:ASME + FREQ:60HZ) + IDRY:N + MODEL:GA75VP_16

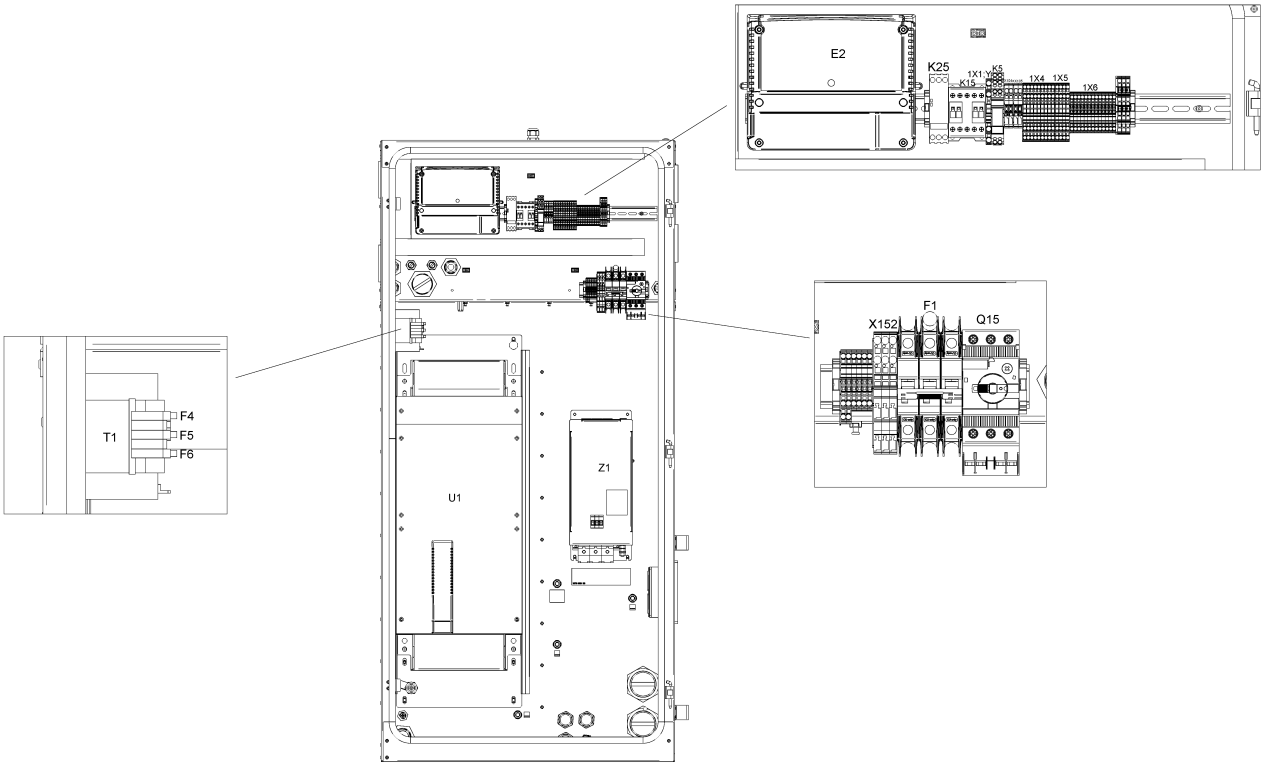

21.7 - Cubicle components GA 75L VSD+ - (200V-400V-500V/50Hz - IEC, 200V-380V-460V/60Hz - IEC, 230V-460V-575V/60Hz - UL-cUL) - Pack (28/11/2019 - ...)

((((CAPPRM:AS1210 , CAPPRM:CE , CAPPRM:MHLW , CAPPRM:MOM) + MOVOL:400V , CAPPRM:CE + COOL:AIR + MOVOL:500V) + FREQ:50HZ , ((MOVOL:380V , MOVOL:460V) + CAPPRM:ASME , CAPPRM:MHLW + MOVOL:460V) + FREQ:60HZ , CAPPRM:MHLW + COOL:AIR + MOVOL:200V) + CAPPRE:IEC , ((MOVOL:230V , MOVOL:575V) + COOL:AIR , MOVOL:460V) + CAPPRE:ULCUL + CAPPRM:ASME + FREQ:60HZ) + IDRY:N + MODEL:GA75VP_16

Ref	Part Number	Qty	Name	Validity	EL
	1900 2202 41	1	CUBICLE	**(28/11/2019 - ...)**	
	9820 3000 31	1	ASSEMBLY DRAWING	**(25/02/2019 - 27/11/2019)** ((((MOVOL:380V , MOVOL:460V) + CAPPRM:ASME , CAPPRM:MHLW + MOVOL:460V) + FREQ:60HZ , (CAPPRM:AS1210 , CAPPRM:CE , CAPPRM:MHLW , CAPPRM:MOM) + FREQ:50HZ + MOVOL:400V) + CAPPRE:IEC , CAPPRE:ULCUL + CAPPRM:ASME + FREQ:60HZ + MOVOL:460V) + COOL:WATER **(28/11/2019 - ...)**	AD
	9820 3000 27	1	SERVICE DIAGRAM	**(25/02/2019 - 27/11/2019)** ((((MOVOL:380V , MOVOL:460V) + CAPPRM:ASME , CAPPRM:MHLW + MOVOL:460V) + FREQ:60HZ , (CAPPRM:AS1210 , CAPPRM:CE , CAPPRM:MHLW , CAPPRM:MOM) + FREQ:50HZ + MOVOL:400V) + CAPPRE:IEC , CAPPRE:ULCUL + CAPPRM:ASME + FREQ:60HZ + MOVOL:460V) + COOL:WATER **(28/11/2019 - ...)**	SD
	1622 3798 72	1	WIRE HARNESS	**(25/02/2019 - 27/11/2019)** ((((MOVOL:380V , MOVOL:460V) + CAPPRM:ASME , CAPPRM:MHLW + MOVOL:460V) + FREQ:60HZ , (CAPPRM:AS1210 , CAPPRM:CE , CAPPRM:MHLW , CAPPRM:MOM) + FREQ:50HZ + MOVOL:400V) + CAPPRE:IEC , CAPPRE:ULCUL + CAPPRM:ASME + FREQ:60HZ + MOVOL:460V) + COOL:WATER **(28/11/2019 - ...)**	Comm Cable
	1622 5099 04	1	DI CHANE CABLE (1400MM)	**(25/02/2019 - 27/11/2019)** ((((MOVOL:380V , MOVOL:460V) + CAPPRM:ASME , CAPPRM:MHLW + MOVOL:460V) + FREQ:60HZ , (CAPPRM:AS1210 , CAPPRM:CE , CAPPRM:MHLW , CAPPRM:MOM) + FREQ:50HZ + MOVOL:400V) + CAPPRE:IEC , CAPPRE:ULCUL + CAPPRM:ASME + FREQ:60HZ + MOVOL:460V) + COOL:WATER **(28/11/2019 - ...)**	
	Electrical legend:	Comm Cable Loose supply			
	1649 8006 00	1	CUBICLE	**(25/02/2019 - 27/11/2019)** ((((MOVOL:380V , MOVOL:460V) + CAPPRM:ASME , CAPPRM:MHLW + MOVOL:460V) + FREQ:60HZ , (CAPPRM:AS1210 , CAPPRM:CE , CAPPRM:MHLW , CAPPRM:MOM) + FREQ:50HZ + MOVOL:400V) + CAPPRE:IEC , CAPPRE:ULCUL + CAPPRM:ASME + FREQ:60HZ + MOVOL:460V) + COOL:WATER **(28/11/2019 - ...)**	MSA
	1649 8001 32	1	PLATE NEOS "D"	**(25/02/2019 - 27/11/2019)** ((((MOVOL:380V , MOVOL:460V) + CAPPRM:ASME , CAPPRM:MHLW + MOVOL:460V) + FREQ:60HZ , (CAPPRM:AS1210 , CAPPRM:CE , CAPPRM:MHLW , CAPPRM:MOM) + FREQ:50HZ + MOVOL:400V) + CAPPRE:IEC , CAPPRE:ULCUL + CAPPRM:ASME + FREQ:60HZ + MOVOL:460V) + COOL:WATER **(28/11/2019 - ...)**	
	Electrical legend:	Mounting plate			
	1649 8003 85	1	MOUNTING PLATE	**(25/02/2019 - 27/11/2019)** ((((MOVOL:380V , MOVOL:460V) + CAPPRM:ASME , CAPPRM:MHLW + MOVOL:460V) + FREQ:60HZ , (CAPPRM:AS1210 , CAPPRM:CE , CAPPRM:MHLW , CAPPRM:MOM) + FREQ:50HZ + MOVOL:400V) + CAPPRE:IEC , CAPPRE:ULCUL + CAPPRM:ASME + FREQ:60HZ + MOVOL:460V) + COOL:WATER **(28/11/2019 - ...)**	
	Electrical legend:	Mounting plate			

Legend:

CAPPRE:IEC - Component approval electrical:IEC
CAPPRE:ULCUL - Component approval electrical:UL/cUL
CAPPRM:AS1210 - Component approval mechanical:AS1210
CAPPRM:ASME - Component approval mechanical:ASME
CAPPRM:CE - Component approval mechanical:CE
CAPPRM:MHLW - Component approval mechanical:MHLW
CAPPRM:MOM - Component approval mechanical:MOM
COOL:AIR - Cooling:Air cooled
COOL:WATER - Cooling:Water cooled
FREQ:50HZ - Frequency:50 Hz
FREQ:60HZ - Frequency:60 Hz
IDRY:N - Integrated dryer:No
MODEL:GA75VP_16 - Model:GA 75VSD+
MOVOL:200V - Supply voltage:200 V
MOVOL:230V - Supply voltage:230 V
MOVOL:380V - Supply voltage:380 V
MOVOL:400V - Supply voltage:400 V
MOVOL:460V - Supply voltage:460 V
MOVOL:500V - Supply voltage:500 V
MOVOL:575V - Supply voltage:575 V

21.7 - Cubicle components GA 75L VSD+ - (200V-400V-500V/50Hz - IEC, 200V-380V-460V/60Hz - IEC, 230V-460V-575V/60Hz - UL-cUL) - Pack (28/11/2019 - ...)

((((CAPPRM:AS1210 , CAPPRM:CE , CAPPRM:MHLW , CAPPRM:MOM) + MOVOL:400V , CAPPRM:CE + COOL:AIR + MOVOL:500V) + FREQ:50HZ , ((MOVOL:380V , MOVOL:460V) + CAPPRM:ASME , CAPPRM:MHLW + MOVOL:460V) + FREQ:60HZ , CAPPRM:MHLW + COOL:AIR + MOVOL:200V) + CAPPRE:IEC , ((MOVOL:230V , MOVOL:575V) + COOL:AIR , MOVOL:460V) + CAPPRE:ULCUL + CAPPRM:ASME + FREQ:60HZ) + IDRY:N + MODEL:GA75VP_16

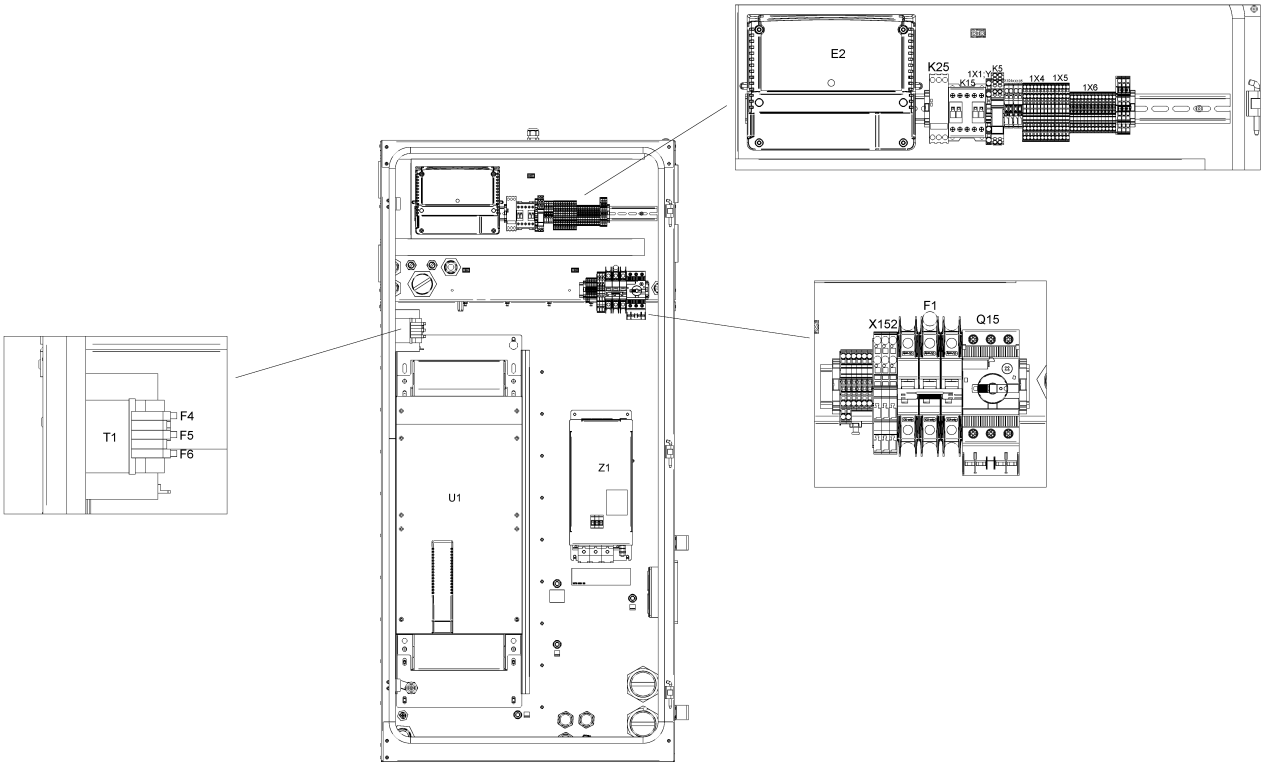

Ref	Part Number	Qty	Name	Validity	EL
	1649 8002 39	1	WIRE HARNESS	**(25/02/2019 - 27/11/2019)** ((((MOVOL:380V , MOVOL:460V) + CAPPRM:ASME , CAPPRM:MHLW + MOVOL:460V) + FREQ:60HZ , (CAPPRM:AS1210 , CAPPRM:CE , CAPPRM:MHLW , CAPPRM:MOM) + FREQ:50HZ + MOVOL:400V) + CAPPRE:IEC , CAPPRE:ULCUL + CAPPRM:ASME + FREQ:60HZ + MOVOL:460V) + COOL:WATER **(28/11/2019 - ...)**	WH
	1649 8002 40	1	WIRE HARNESS	**(25/02/2019 - 27/11/2019)** ((((MOVOL:380V , MOVOL:460V) + CAPPRM:ASME , CAPPRM:MHLW + MOVOL:460V) + FREQ:60HZ , (CAPPRM:AS1210 , CAPPRM:CE , CAPPRM:MHLW , CAPPRM:MOM) + FREQ:50HZ + MOVOL:400V) + CAPPRE:IEC , CAPPRE:ULCUL + CAPPRM:ASME + FREQ:60HZ + MOVOL:460V) + COOL:WATER **(28/11/2019 - ...)**	WH
	1649 8002 73	1	WIRE HARNESS	**(25/02/2019 - 27/11/2019)** ((((MOVOL:380V , MOVOL:460V) + CAPPRM:ASME , CAPPRM:MHLW + MOVOL:460V) + FREQ:60HZ , (CAPPRM:AS1210 , CAPPRM:CE , CAPPRM:MHLW , CAPPRM:MOM) + FREQ:50HZ + MOVOL:400V) + CAPPRE:IEC , CAPPRE:ULCUL + CAPPRM:ASME + FREQ:60HZ + MOVOL:460V) + COOL:WATER **(28/11/2019 - ...)**	
	Electrical legend:	Pack Drain + Air filter switch			
	1649 8002 75	1	WIRE HARNESS	**(25/02/2019 - 27/11/2019)** ((((MOVOL:380V , MOVOL:460V) + CAPPRM:ASME , CAPPRM:MHLW + MOVOL:460V) + FREQ:60HZ , (CAPPRM:AS1210 , CAPPRM:CE , CAPPRM:MHLW , CAPPRM:MOM) + FREQ:50HZ + MOVOL:400V) + CAPPRE:IEC , CAPPRE:ULCUL + CAPPRM:ASME + FREQ:60HZ + MOVOL:460V) + COOL:WATER **(28/11/2019 - ...)**	
	Electrical legend:	Relative Humidity sensor			
	1649 8001 45	3	MOTOR CABLE	**(25/02/2019 - 27/11/2019)** ((((MOVOL:380V , MOVOL:460V) + CAPPRM:ASME , CAPPRM:MHLW + MOVOL:460V) + FREQ:60HZ , (CAPPRM:AS1210 , CAPPRM:CE , CAPPRM:MHLW , CAPPRM:MOM) + FREQ:50HZ + MOVOL:400V) + CAPPRE:IEC , CAPPRE:ULCUL + CAPPRM:ASME + FREQ:60HZ + MOVOL:460V) + COOL:WATER **(28/11/2019 - ...)**	
	Electrical legend:	Motor conduit			
	1649 8001 48	1	MOTOR CABLE	**(25/02/2019 - 27/11/2019)** ((((MOVOL:380V , MOVOL:460V) + CAPPRM:ASME , CAPPRM:MHLW + MOVOL:460V) + FREQ:60HZ , (CAPPRM:AS1210 , CAPPRM:CE , CAPPRM:MHLW , CAPPRM:MOM) + FREQ:50HZ + MOVOL:400V) + CAPPRE:IEC , CAPPRE:ULCUL + CAPPRM:ASME + FREQ:60HZ + MOVOL:460V) + COOL:WATER **(28/11/2019 - ...)**	
	Electrical legend:	Motor conduit			
	1625 3906 31	1	DATA LABEL	**(25/02/2019 - 27/11/2019)** ((((MOVOL:380V , MOVOL:460V) + CAPPRM:ASME , CAPPRM:MHLW + MOVOL:460V) + FREQ:60HZ , (CAPPRM:AS1210 , CAPPRM:CE , CAPPRM:MHLW , CAPPRM:MOM) + FREQ:50HZ + MOVOL:400V) + CAPPRE:IEC , CAPPRE:ULCUL + CAPPRM:ASME + FREQ:60HZ + MOVOL:460V) + COOL:WATER **(28/11/2019 - ...)**	Label

Legend:

CAPPRE:IEC - Component approval electrical:IEC
CAPPRE:ULCUL - Component approval electrical:UL/cUL
CAPPRM:AS1210 - Component approval mechanical:AS1210
CAPPRM:ASME - Component approval mechanical:ASME
CAPPRM:CE - Component approval mechanical:CE
CAPPRM:MHLW - Component approval mechanical:MHLW
CAPPRM:MOM - Component approval mechanical:MOM
COOL:AIR - Cooling:Air cooled
COOL:WATER - Cooling:Water cooled
FREQ:50HZ - Frequency:50 Hz
FREQ:60HZ - Frequency:60 Hz
IDRY:N - Integrated dryer:No
MODEL:GA75VP_16 - Model:GA 75VSD+
MOVOL:200V - Supply voltage:200 V
MOVOL:230V - Supply voltage:230 V
MOVOL:380V - Supply voltage:380 V
MOVOL:400V - Supply voltage:400 V
MOVOL:460V - Supply voltage:460 V
MOVOL:500V - Supply voltage:500 V
MOVOL:575V - Supply voltage:575 V

21.7 - Cubicle components GA 75L VSD+ - (200V-400V-500V/50Hz - IEC, 200V-380V-460V/60Hz - IEC, 230V-460V-575V/60Hz - UL-cUL) - Pack (28/11/2019 - ...)

((((CAPPRM:AS1210 , CAPPRM:CE , CAPPRM:MHLW , CAPPRM:MOM) + MOVOL:400V , CAPPRM:CE + COOL:AIR + MOVOL:500V) + FREQ:50HZ , ((MOVOL:380V , MOVOL:460V) + CAPPRM:ASME , CAPPRM:MHLW + MOVOL:460V) + FREQ:60HZ , CAPPRM:MHLW + COOL:AIR + MOVOL:200V) + CAPPRE:IEC , ((MOVOL:230V , MOVOL:575V) + COOL:AIR , MOVOL:460V) + CAPPRE:ULCUL + CAPPRM:ASME + FREQ:60HZ) + IDRY:N + MODEL:GA75VP_16

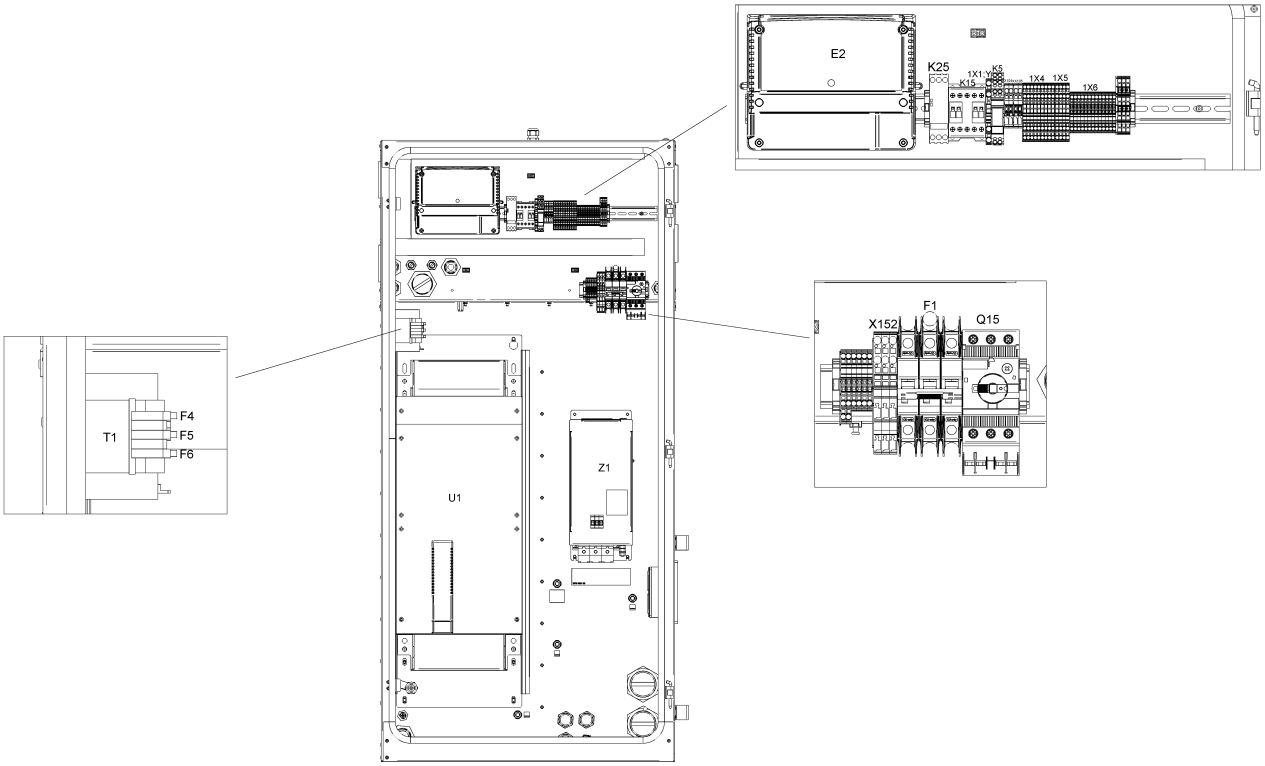

21.7 - Cubicle components GA 75L VSD+ - (200V-400V-500V/50Hz - IEC, 200V-380V-460V/60Hz - IEC, 230V-460V-575V/60Hz - UL-cUL) - Pack (28/11/2019 - ...)

((((CAPPRM:AS1210 , CAPPRM:CE , CAPPRM:MHLW , CAPPRM:MOM) + MOVOL:400V , CAPPRM:CE + COOL:AIR + MOVOL:500V) + FREQ:50HZ , ((MOVOL:380V , MOVOL:460V) + CAPPRM:ASME , CAPPRM:MHLW + MOVOL:460V) + FREQ:60HZ , CAPPRM:MHLW + COOL:AIR + MOVOL:200V) + CAPPRE:IEC , ((MOVOL:230V , MOVOL:575V) + COOL:AIR , MOVOL:460V) + CAPPRE:ULCUL + CAPPRM:ASME + FREQ:60HZ) + IDRY:N + MODEL:GA75VP_16

Ref	Part Number	Qty	Name	Validity	EL
	1079 9901 68	1	WARNING LABEL	**(25/02/2019 - 27/11/2019)** ((((MOVOL:380V , MOVOL:460V) + CAPPRM:ASME , CAPPRM:MHLW + MOVOL:460V) + FREQ:60HZ , (CAPPRM:AS1210 , CAPPRM:CE , CAPPRM:MHLW , CAPPRM:MOM) + FREQ:50HZ + MOVOL:400V) + CAPPRE:IEC , CAPPRE:ULCUL + CAPPRM:ASME + FREQ:60HZ + MOVOL:460V) + COOL:WATER **(28/11/2019 - ...)**	Label
	1649 8005 00	0	LABEL	**(25/02/2019 - 27/11/2019)** ((((MOVOL:380V , MOVOL:460V) + CAPPRM:ASME , CAPPRM:MHLW + MOVOL:460V) + FREQ:60HZ , (CAPPRM:AS1210 , CAPPRM:CE , CAPPRM:MHLW , CAPPRM:MOM) + FREQ:50HZ + MOVOL:400V) + CAPPRE:IEC , CAPPRE:ULCUL + CAPPRM:ASME + FREQ:60HZ + MOVOL:460V) + COOL:WATER **(28/11/2019 - ...)**	Label
	1900 5350 15	1	INVERTER	**(25/02/2019 - 27/11/2019)** ((((MOVOL:380V , MOVOL:460V) + CAPPRM:ASME , CAPPRM:MHLW + MOVOL:460V) + FREQ:60HZ , (CAPPRM:AS1210 , CAPPRM:CE , CAPPRM:MHLW , CAPPRM:MOM) + FREQ:50HZ + MOVOL:400V) + CAPPRE:IEC , CAPPRE:ULCUL + CAPPRM:ASME + FREQ:60HZ + MOVOL:460V) + COOL:WATER **(28/11/2019 - ...)**	U1
	1631 2079 00	1	NANOPERMRING	**(25/02/2019 - 27/11/2019)** ((((MOVOL:380V , MOVOL:460V) + CAPPRM:ASME , CAPPRM:MHLW + MOVOL:460V) + FREQ:60HZ , (CAPPRM:AS1210 , CAPPRM:CE , CAPPRM:MHLW , CAPPRM:MOM) + FREQ:50HZ + MOVOL:400V) + CAPPRE:IEC , CAPPRE:ULCUL + CAPPRM:ASME + FREQ:60HZ + MOVOL:460V) + COOL:WATER **(28/11/2019 - ...)**	
	Electrical legend:	Nanoperm ring			
	0697 9811 17	2	PLUG	**(25/02/2019 - 27/11/2019)** ((((MOVOL:380V , MOVOL:460V) + CAPPRM:ASME , CAPPRM:MHLW + MOVOL:460V) + FREQ:60HZ , (CAPPRM:AS1210 , CAPPRM:CE , CAPPRM:MHLW , CAPPRM:MOM) + FREQ:50HZ + MOVOL:400V) + CAPPRE:IEC , CAPPRE:ULCUL + CAPPRM:ASME + FREQ:60HZ + MOVOL:460V) + COOL:WATER **(28/11/2019 - ...)**	
	Electrical legend:	Plug for transfo supply			
	0989 3700 48	2	NUT	**(25/02/2019 - 27/11/2019)** ((((MOVOL:380V , MOVOL:460V) + CAPPRM:ASME , CAPPRM:MHLW + MOVOL:460V) + FREQ:60HZ , (CAPPRM:AS1210 , CAPPRM:CE , CAPPRM:MHLW , CAPPRM:MOM) + FREQ:50HZ + MOVOL:400V) + CAPPRE:IEC , CAPPRE:ULCUL + CAPPRM:ASME + FREQ:60HZ + MOVOL:460V) + COOL:WATER **(28/11/2019 - ...)**	
	Electrical legend:	Nut for transfo supply			
	0698 5140 72	1	CABLE GLAND	**(25/02/2019 - 27/11/2019)** ((((MOVOL:380V , MOVOL:460V) + CAPPRM:ASME , CAPPRM:MHLW + MOVOL:460V) + FREQ:60HZ , (CAPPRM:AS1210 , CAPPRM:CE , CAPPRM:MHLW , CAPPRM:MOM) + FREQ:50HZ + MOVOL:400V) + CAPPRE:IEC , CAPPRE:ULCUL + CAPPRM:ASME + FREQ:60HZ + MOVOL:460V) + COOL:WATER **(28/11/2019 - ...)**	Fan

Legend:

CAPPRE:IEC - Component approval electrical:IEC
CAPPRE:ULCUL - Component approval electrical:UL/cUL
CAPPRM:AS1210 - Component approval mechanical:AS1210
CAPPRM:ASME - Component approval mechanical:ASME
CAPPRM:CE - Component approval mechanical:CE
CAPPRM:MHLW - Component approval mechanical:MHLW
CAPPRM:MOM - Component approval mechanical:MOM
COOL:AIR - Cooling:Air cooled
COOL:WATER - Cooling:Water cooled
FREQ:50HZ - Frequency:50 Hz
FREQ:60HZ - Frequency:60 Hz
IDRY:N - Integrated dryer:No
MODEL:GA75VP_16 - Model:GA 75VSD+
MOVOL:200V - Supply voltage:200 V
MOVOL:230V - Supply voltage:230 V
MOVOL:380V - Supply voltage:380 V
MOVOL:400V - Supply voltage:400 V
MOVOL:460V - Supply voltage:460 V
MOVOL:500V - Supply voltage:500 V
MOVOL:575V - Supply voltage:575 V

21.7 - Cubicle components GA 75L VSD+ - (200V-400V-500V/50Hz - IEC, 200V-380V-460V/60Hz - IEC, 230V-460V-575V/60Hz - UL-cUL) - Pack (28/11/2019 - ...)

((((CAPPRM:AS1210 , CAPPRM:CE , CAPPRM:MHLW , CAPPRM:MOM) + MOVOL:400V , CAPPRM:CE + COOL:AIR + MOVOL:500V) + FREQ:50HZ , ((MOVOL:380V , MOVOL:460V) + CAPPRM:ASME , CAPPRM:MHLW + MOVOL:460V) + FREQ:60HZ , CAPPRM:MHLW + COOL:AIR + MOVOL:200V) + CAPPRE:IEC , ((MOVOL:230V , MOVOL:575V) + COOL:AIR , MOVOL:460V) + CAPPRE:ULCUL + CAPPRM:ASME + FREQ:60HZ) + IDRY:N + MODEL:GA75VP_16

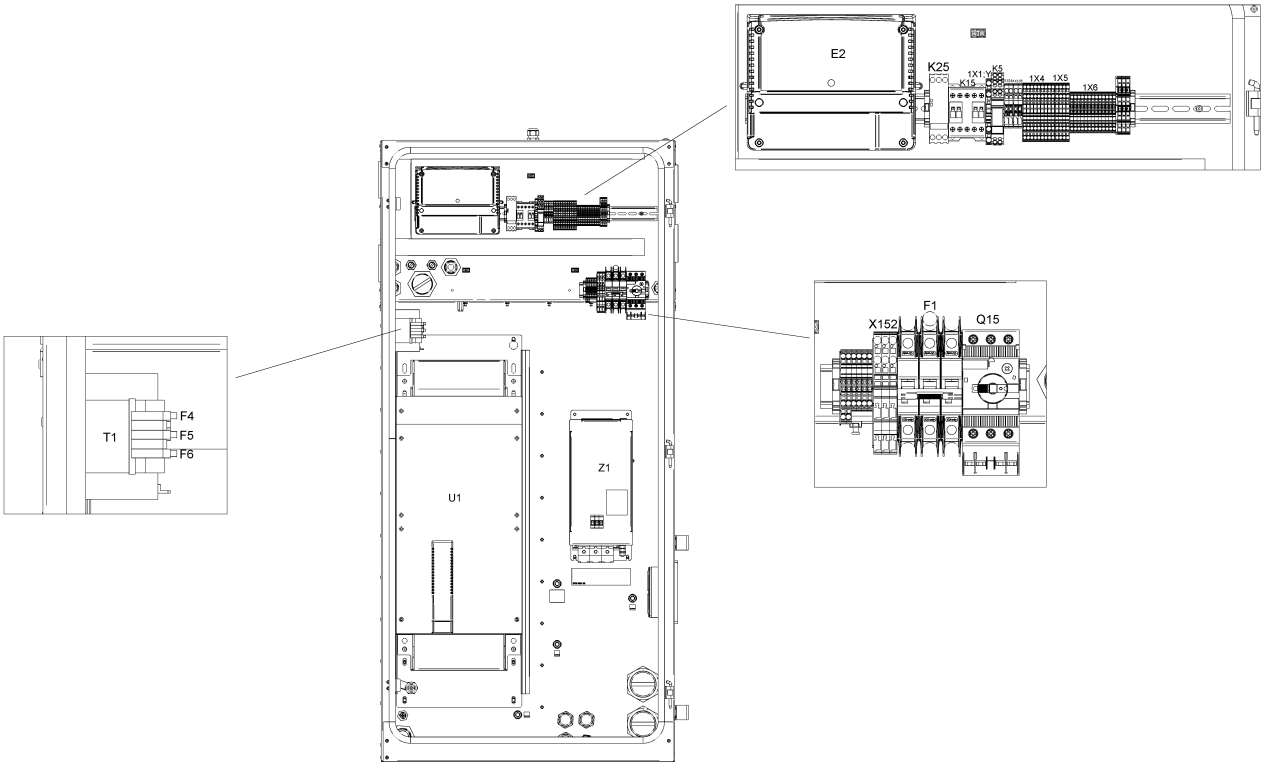

21.7 - Cubicle components GA 75L VSD+ - (200V-400V-500V/50Hz - IEC, 200V-380V-460V/60Hz - IEC, 230V-460V-575V/60Hz - UL-cUL) - Pack (28/11/2019 - ...)

((((CAPPRM:AS1210 , CAPPRM:CE , CAPPRM:MHLW , CAPPRM:MOM) + MOVOL:400V , CAPPRM:CE + COOL:AIR + MOVOL:500V) + FREQ:50HZ , ((MOVOL:380V , MOVOL:460V) + CAPPRM:ASME , CAPPRM:MHLW + MOVOL:460V) + FREQ:60HZ , CAPPRM:MHLW + COOL:AIR + MOVOL:200V) + CAPPRE:IEC , ((MOVOL:230V , MOVOL:575V) + COOL:AIR , MOVOL:460V) + CAPPRE:ULCUL + CAPPRM:ASME + FREQ:60HZ) + IDRY:N + MODEL:GA75VP_16

Ref	Part Number	Qty	Name	Validity	EL
	0698 5140 71	1	CABLE GLAND	**(25/02/2019 - 27/11/2019)** ((((MOVOL:380V , MOVOL:460V) + CAPPRM:ASME , CAPPRM:MHLW + MOVOL:460V) + FREQ:60HZ , (CAPPRM:AS1210 , CAPPRM:CE , CAPPRM:MHLW , CAPPRM:MOM) + FREQ:50HZ + MOVOL:400V) + CAPPRE:IEC , CAPPRE:ULCUL + CAPPRM:ASME + FREQ:60HZ + MOVOL:460V) + COOL:WATER **(28/11/2019 - ...)**	
	Electrical legend:	Ambient sensor			
	0697 9809 20	1	LOCKNUT	**(25/02/2019 - 27/11/2019)** ((((MOVOL:380V , MOVOL:460V) + CAPPRM:ASME , CAPPRM:MHLW + MOVOL:460V) + FREQ:60HZ , (CAPPRM:AS1210 , CAPPRM:CE , CAPPRM:MHLW , CAPPRM:MOM) + FREQ:50HZ + MOVOL:400V) + CAPPRE:IEC , CAPPRE:ULCUL + CAPPRM:ASME + FREQ:60HZ + MOVOL:460V) + COOL:WATER **(28/11/2019 - ...)**	
	Electrical legend:	Ambient sensor			
	1089 9556 44	1	FAN WITH FILTER	**(25/02/2019 - 27/11/2019)** ((((MOVOL:380V , MOVOL:460V) + CAPPRM:ASME , CAPPRM:MHLW + MOVOL:460V) + FREQ:60HZ , (CAPPRM:AS1210 , CAPPRM:CE , CAPPRM:MHLW , CAPPRM:MOM) + FREQ:50HZ + MOVOL:400V) + CAPPRE:IEC , CAPPRE:ULCUL + CAPPRM:ASME + FREQ:60HZ + MOVOL:460V) + COOL:WATER **(28/11/2019 - ...)**	Cubicle fan
	1089 9556 72	4	AIR INLET WITHOUT FILTER	**(25/02/2019 - 27/11/2019)** ((((MOVOL:380V , MOVOL:460V) + CAPPRM:ASME , CAPPRM:MHLW + MOVOL:460V) + FREQ:60HZ , (CAPPRM:AS1210 , CAPPRM:CE , CAPPRM:MHLW , CAPPRM:MOM) + FREQ:50HZ + MOVOL:400V) + CAPPRE:IEC , CAPPRE:ULCUL + CAPPRM:ASME + FREQ:60HZ + MOVOL:460V) + COOL:WATER **(28/11/2019 - ...)**	Filter grid
	1088 0032 09	1	CONNECTOR	**(25/02/2019 - 27/11/2019)** ((((MOVOL:380V , MOVOL:460V) + CAPPRM:ASME , CAPPRM:MHLW + MOVOL:460V) + FREQ:60HZ , (CAPPRM:AS1210 , CAPPRM:CE , CAPPRM:MHLW , CAPPRM:MOM) + FREQ:50HZ + MOVOL:400V) + CAPPRE:IEC , CAPPRE:ULCUL + CAPPRM:ASME + FREQ:60HZ + MOVOL:460V) + COOL:WATER **(28/11/2019 - ...)**	X3
	1089 9572 05	1	LINE FILTER	**(25/02/2019 - 27/11/2019)** ((((MOVOL:380V , MOVOL:460V) + CAPPRM:ASME , CAPPRM:MHLW + MOVOL:460V) + FREQ:60HZ , (CAPPRM:AS1210 , CAPPRM:CE , CAPPRM:MHLW , CAPPRM:MOM) + FREQ:50HZ + MOVOL:400V) + CAPPRE:IEC , CAPPRE:ULCUL + CAPPRM:ASME + FREQ:60HZ + MOVOL:460V) + COOL:WATER **(28/11/2019 - ...)**	Z1 for 75 kw
	Electrical legend:	Z1 for 75 kw			
	1089 9562 04	1	STRAP	**(25/02/2019 - 27/11/2019)** ((((MOVOL:380V , MOVOL:460V) + CAPPRM:ASME , CAPPRM:MHLW + MOVOL:460V) + FREQ:60HZ , (CAPPRM:AS1210 , CAPPRM:CE , CAPPRM:MHLW , CAPPRM:MOM) + FREQ:50HZ + MOVOL:400V) + CAPPRE:IEC , CAPPRE:ULCUL + CAPPRM:ASME + FREQ:60HZ + MOVOL:460V) + COOL:WATER **(28/11/2019 - ...)**	HF-screen

Legend:

CAPPRE:IEC - Component approval electrical:IEC
CAPPRE:ULCUL - Component approval electrical:UL/cUL
CAPPRM:AS1210 - Component approval mechanical:AS1210
CAPPRM:ASME - Component approval mechanical:ASME
CAPPRM:CE - Component approval mechanical:CE
CAPPRM:MHLW - Component approval mechanical:MHLW
CAPPRM:MOM - Component approval mechanical:MOM
COOL:AIR - Cooling:Air cooled
COOL:WATER - Cooling:Water cooled
FREQ:50HZ - Frequency:50 Hz
FREQ:60HZ - Frequency:60 Hz
IDRY:N - Integrated dryer:No
MODEL:GA75VP_16 - Model:GA 75VSD+
MOVOL:200V - Supply voltage:200 V
MOVOL:230V - Supply voltage:230 V
MOVOL:380V - Supply voltage:380 V
MOVOL:400V - Supply voltage:400 V
MOVOL:460V - Supply voltage:460 V
MOVOL:500V - Supply voltage:500 V
MOVOL:575V - Supply voltage:575 V

21.7 - Cubicle components GA 75L VSD+ - (200V-400V-500V/50Hz - IEC, 200V-380V-460V/60Hz - IEC, 230V-460V-575V/60Hz - UL-cUL) - Pack (28/11/2019 - ...)

((((CAPPRM:AS1210 , CAPPRM:CE , CAPPRM:MHLW , CAPPRM:MOM) + MOVOL:400V , CAPPRM:CE + COOL:AIR + MOVOL:500V) + FREQ:50HZ , ((MOVOL:380V , MOVOL:460V) + CAPPRM:ASME , CAPPRM:MHLW + MOVOL:460V) + FREQ:60HZ , CAPPRM:MHLW + COOL:AIR + MOVOL:200V) + CAPPRE:IEC , ((MOVOL:230V , MOVOL:575V) + COOL:AIR , MOVOL:460V) + CAPPRE:ULCUL + CAPPRM:ASME + FREQ:60HZ) + IDRY:N + MODEL:GA75VP_16

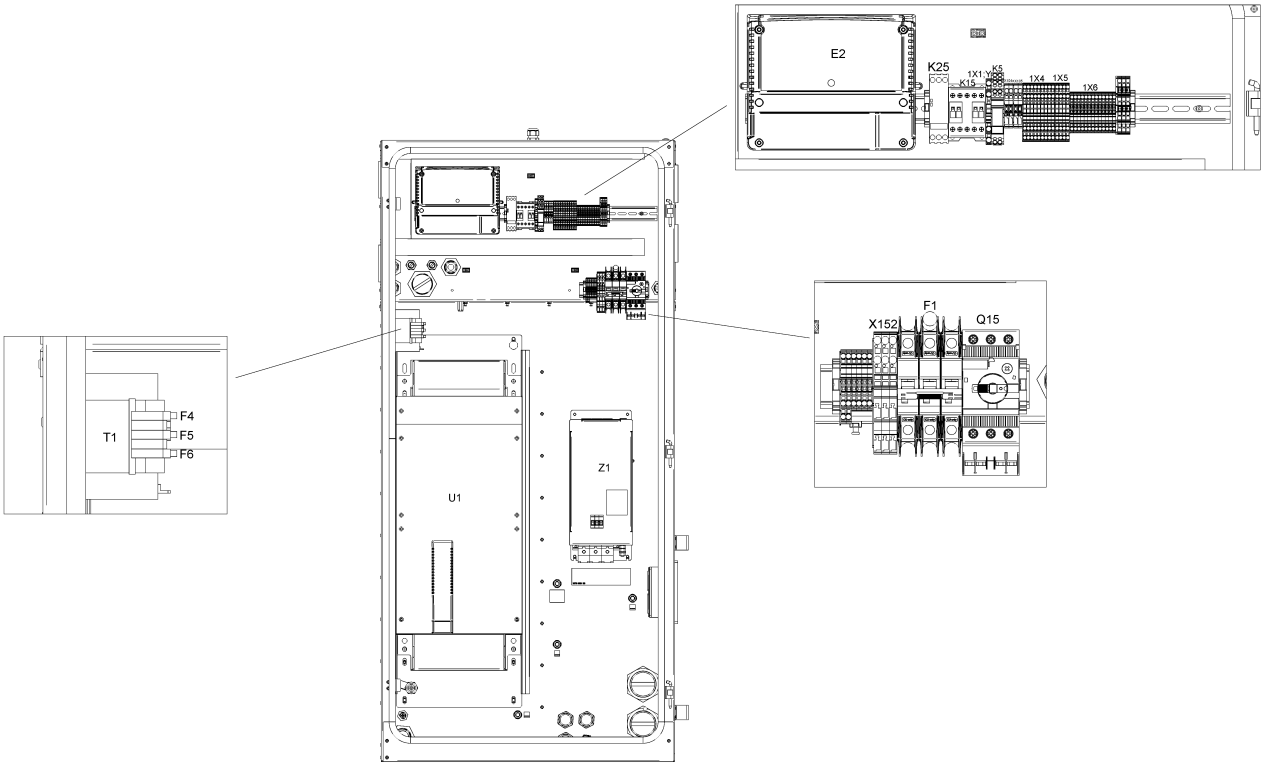

21.7 - Cubicle components GA 75L VSD+ - (200V-400V-500V/50Hz - IEC, 200V-380V-460V/60Hz - IEC, 230V-460V-575V/60Hz - UL-cUL) - Pack (28/11/2019 - ...)

((((CAPPRM:AS1210 , CAPPRM:CE , CAPPRM:MHLW , CAPPRM:MOM) + MOVOL:400V , CAPPRM:CE + COOL:AIR + MOVOL:500V) + FREQ:50HZ , ((MOVOL:380V , MOVOL:460V) + CAPPRM:ASME , CAPPRM:MHLW + MOVOL:460V) + FREQ:60HZ , CAPPRM:MHLW + COOL:AIR + MOVOL:200V) + CAPPRE:IEC , ((MOVOL:230V , MOVOL:575V) + COOL:AIR , MOVOL:460V) + CAPPRE:ULCUL + CAPPRM:ASME + FREQ:60HZ) + IDRY:N + MODEL:GA75VP_16

Ref	Part Number	Qty	Name	Validity	EL
	1089 9514 56	1	TRANSFORMER	**(25/02/2019 - 27/11/2019)** ((((MOVOL:380V , MOVOL:460V) + CAPPRM:ASME , CAPPRM:MHLW + MOVOL:460V) + FREQ:60HZ , (CAPPRM:AS1210 , CAPPRM:CE , CAPPRM:MHLW , CAPPRM:MOM) + FREQ:50HZ + MOVOL:400V) + CAPPRE:IEC , CAPPRE:ULCUL + CAPPRM:ASME + FREQ:60HZ + MOVOL:460V) + COOL:WATER **(28/11/2019 - ...)**	T1
	1089 9522 26	1	CIRCUIT BREAKER	**(25/02/2019 - 27/11/2019)** ((((MOVOL:380V , MOVOL:460V) + CAPPRM:ASME , CAPPRM:MHLW + MOVOL:460V) + FREQ:60HZ , (CAPPRM:AS1210 , CAPPRM:CE , CAPPRM:MHLW , CAPPRM:MOM) + FREQ:50HZ + MOVOL:400V) + CAPPRE:IEC , CAPPRE:ULCUL + CAPPRM:ASME + FREQ:60HZ + MOVOL:460V) + COOL:WATER **(28/11/2019 - ...)**	F1
	1089 9513 41	1	PUSH BUTTON	**(25/02/2019 - 27/11/2019)** ((((MOVOL:380V , MOVOL:460V) + CAPPRM:ASME , CAPPRM:MHLW + MOVOL:460V) + FREQ:60HZ , (CAPPRM:AS1210 , CAPPRM:CE , CAPPRM:MHLW , CAPPRM:MOM) + FREQ:50HZ + MOVOL:400V) + CAPPRE:IEC , CAPPRE:ULCUL + CAPPRM:ASME + FREQ:60HZ + MOVOL:460V) + COOL:WATER **(28/11/2019 - ...)**	S3
	1089 9513 28	1	HOLDER	**(25/02/2019 - 27/11/2019)** ((((MOVOL:380V , MOVOL:460V) + CAPPRM:ASME , CAPPRM:MHLW + MOVOL:460V) + FREQ:60HZ , (CAPPRM:AS1210 , CAPPRM:CE , CAPPRM:MHLW , CAPPRM:MOM) + FREQ:50HZ + MOVOL:400V) + CAPPRE:IEC , CAPPRE:ULCUL + CAPPRM:ASME + FREQ:60HZ + MOVOL:460V) + COOL:WATER **(28/11/2019 - ...)**	S3
	~~1089 9513 30~~	4	CONTACTOR	**(25/02/2019 - 27/11/2019)** ((((MOVOL:380V , MOVOL:460V) + CAPPRM:ASME , CAPPRM:MHLW + MOVOL:460V) + FREQ:60HZ , (CAPPRM:AS1210 , CAPPRM:CE , CAPPRM:MHLW , CAPPRM:MOM) + FREQ:50HZ + MOVOL:400V) + CAPPRE:IEC , CAPPRE:ULCUL + CAPPRM:ASME + FREQ:60HZ + MOVOL:460V) + COOL:WATER **(28/11/2019 - ...)**	S3
	Substituted by:	1089 9513 04 - CONTACT BLOCK (quantity: 1)			
	1088 0039 07	3	TERMINAL	**(25/02/2019 - 27/11/2019)** ((((MOVOL:380V , MOVOL:460V) + CAPPRM:ASME , CAPPRM:MHLW + MOVOL:460V) + FREQ:60HZ , (CAPPRM:AS1210 , CAPPRM:CE , CAPPRM:MHLW , CAPPRM:MOM) + FREQ:50HZ + MOVOL:400V) + CAPPRE:IEC , CAPPRE:ULCUL + CAPPRM:ASME + FREQ:60HZ + MOVOL:460V) + COOL:WATER **(28/11/2019 - ...)**	X152
	1088 0039 05	1	PLATE	**(25/02/2019 - 27/11/2019)** ((((MOVOL:380V , MOVOL:460V) + CAPPRM:ASME , CAPPRM:MHLW + MOVOL:460V) + FREQ:60HZ , (CAPPRM:AS1210 , CAPPRM:CE , CAPPRM:MHLW , CAPPRM:MOM) + FREQ:50HZ + MOVOL:400V) + CAPPRE:IEC , CAPPRE:ULCUL + CAPPRM:ASME + FREQ:60HZ + MOVOL:460V) + COOL:WATER **(28/11/2019 - ...)**	X152

Legend:

CAPPRE:IEC - Component approval electrical:IEC
CAPPRE:ULCUL - Component approval electrical:UL/cUL
CAPPRM:AS1210 - Component approval mechanical:AS1210
CAPPRM:ASME - Component approval mechanical:ASME
CAPPRM:CE - Component approval mechanical:CE
CAPPRM:MHLW - Component approval mechanical:MHLW
CAPPRM:MOM - Component approval mechanical:MOM
COOL:AIR - Cooling:Air cooled
COOL:WATER - Cooling:Water cooled
FREQ:50HZ - Frequency:50 Hz
FREQ:60HZ - Frequency:60 Hz
IDRY:N - Integrated dryer:No
MODEL:GA75VP_16 - Model:GA 75VSD+
MOVOL:200V - Supply voltage:200 V
MOVOL:230V - Supply voltage:230 V
MOVOL:380V - Supply voltage:380 V
MOVOL:400V - Supply voltage:400 V
MOVOL:460V - Supply voltage:460 V
MOVOL:500V - Supply voltage:500 V
MOVOL:575V - Supply voltage:575 V

21.7 - Cubicle components GA 75L VSD+ - (200V-400V-500V/50Hz - IEC, 200V-380V-460V/60Hz - IEC, 230V-460V-575V/60Hz - UL-cUL) - Pack (28/11/2019 - ...)

((((CAPPRM:AS1210 , CAPPRM:CE , CAPPRM:MHLW , CAPPRM:MOM) + MOVOL:400V , CAPPRM:CE + COOL:AIR + MOVOL:500V) + FREQ:50HZ , ((MOVOL:380V , MOVOL:460V) + CAPPRM:ASME , CAPPRM:MHLW + MOVOL:460V) + FREQ:60HZ , CAPPRM:MHLW + COOL:AIR + MOVOL:200V) + CAPPRE:IEC , ((MOVOL:230V , MOVOL:575V) + COOL:AIR , MOVOL:460V) + CAPPRE:ULCUL + CAPPRM:ASME + FREQ:60HZ) + IDRY:N + MODEL:GA75VP_16

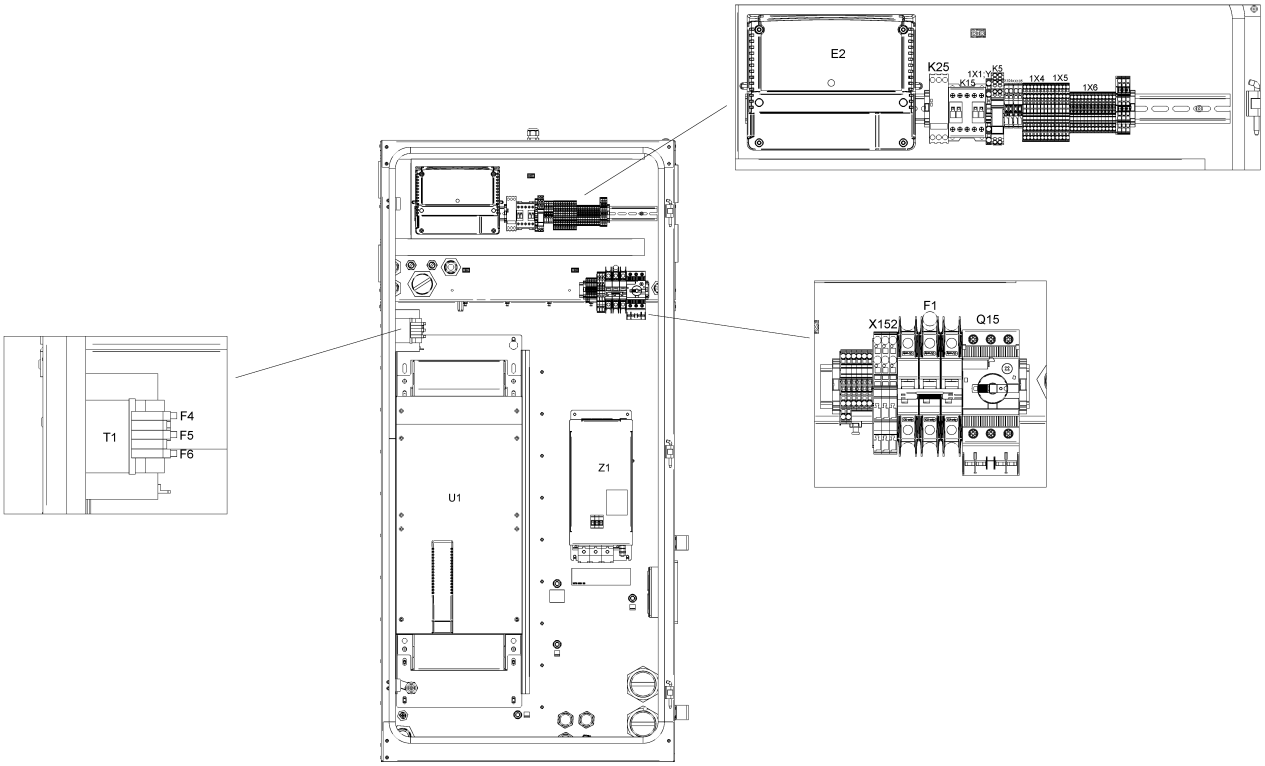

((((CAPPRM:AS1210 , CAPPRM:CE , CAPPRM:MHLW , CAPPRM:MOM) + MOVOL:400V , CAPPRM:CE + COOL:AIR + MOVOL:500V) + FREQ:50HZ , ((MOVOL:380V , MOVOL:460V) + CAPPRM:ASME , CAPPRM:MHLW + MOVOL:460V) + FREQ:60HZ , CAPPRM:MHLW + COOL:AIR + MOVOL:200V) + CAPPRE:IEC , ((MOVOL:230V , MOVOL:575V) + COOL:AIR , MOVOL:460V) + CAPPRE:ULCUL + CAPPRM:ASME + FREQ:60HZ) + IDRY:N + MODEL:GA75VP_16

Ref	Part Number	Qty	Name	Validity	EL
	1088 0039 26	1	CONNECTOR	**(25/02/2019 - 27/11/2019)** ((((MOVOL:380V , MOVOL:460V) + CAPPRM:ASME , CAPPRM:MHLW + MOVOL:460V) + FREQ:60HZ , (CAPPRM:AS1210 , CAPPRM:CE , CAPPRM:MHLW , CAPPRM:MOM) + FREQ:50HZ + MOVOL:400V) + CAPPRE:IEC , CAPPRE:ULCUL + CAPPRM:ASME + FREQ:60HZ + MOVOL:460V) + COOL:WATER **(28/11/2019 - ...)**	
	Electrical legend:	X152 (remove coding pin 1,3)			
	1088 0037 99	4	PIN	**(25/02/2019 - 27/11/2019)** ((((MOVOL:380V , MOVOL:460V) + CAPPRM:ASME , CAPPRM:MHLW + MOVOL:460V) + FREQ:60HZ , (CAPPRM:AS1210 , CAPPRM:CE , CAPPRM:MHLW , CAPPRM:MOM) + FREQ:50HZ + MOVOL:400V) + CAPPRE:IEC , CAPPRE:ULCUL + CAPPRM:ASME + FREQ:60HZ + MOVOL:460V) + COOL:WATER **(28/11/2019 - ...)**	X152:1; 3
	~~1088 0031 81~~	7	END STOP BRACKET 6MM	**(25/02/2019 - 27/11/2019)** ((((MOVOL:380V , MOVOL:460V) + CAPPRM:ASME , CAPPRM:MHLW + MOVOL:460V) + FREQ:60HZ , (CAPPRM:AS1210 , CAPPRM:CE , CAPPRM:MHLW , CAPPRM:MOM) + FREQ:50HZ + MOVOL:400V) + CAPPRE:IEC , CAPPRE:ULCUL + CAPPRM:ASME + FREQ:60HZ + MOVOL:460V) + COOL:WATER **(28/11/2019 - ...)**	
	Electrical legend:	Connector/terminal rail			
	Substituted by:	1089 0577 82 - END RETAINER (quantity: 1)			
	1088 0039 38	2	TERMINAL	**(25/02/2019 - 27/11/2019)** ((((MOVOL:380V , MOVOL:460V) + CAPPRM:ASME , CAPPRM:MHLW + MOVOL:460V) + FREQ:60HZ , (CAPPRM:AS1210 , CAPPRM:CE , CAPPRM:MHLW , CAPPRM:MOM) + FREQ:50HZ + MOVOL:400V) + CAPPRE:IEC , CAPPRE:ULCUL + CAPPRM:ASME + FREQ:60HZ + MOVOL:460V) + COOL:WATER **(28/11/2019 - ...)**	1X11:2,5
	1088 0039 40	1	PLATE	**(25/02/2019 - 27/11/2019)** ((((MOVOL:380V , MOVOL:460V) + CAPPRM:ASME , CAPPRM:MHLW + MOVOL:460V) + FREQ:60HZ , (CAPPRM:AS1210 , CAPPRM:CE , CAPPRM:MHLW , CAPPRM:MOM) + FREQ:50HZ + MOVOL:400V) + CAPPRE:IEC , CAPPRE:ULCUL + CAPPRM:ASME + FREQ:60HZ + MOVOL:460V) + COOL:WATER **(28/11/2019 - ...)**	1X11
	1088 0039 34	4	TERMINAL	**(25/02/2019 - 27/11/2019)** ((((MOVOL:380V , MOVOL:460V) + CAPPRM:ASME , CAPPRM:MHLW + MOVOL:460V) + FREQ:60HZ , (CAPPRM:AS1210 , CAPPRM:CE , CAPPRM:MHLW , CAPPRM:MOM) + FREQ:50HZ + MOVOL:400V) + CAPPRE:IEC , CAPPRE:ULCUL + CAPPRM:ASME + FREQ:60HZ + MOVOL:460V) + COOL:WATER **(28/11/2019 - ...)**	
	Electrical legend:	1X11:30,301,34			
	1088 0039 35	1	PLATE	**(25/02/2019 - 27/11/2019)** ((((MOVOL:380V , MOVOL:460V) + CAPPRM:ASME , CAPPRM:MHLW + MOVOL:460V) + FREQ:60HZ , (CAPPRM:AS1210 , CAPPRM:CE , CAPPRM:MHLW , CAPPRM:MOM) + FREQ:50HZ + MOVOL:400V) + CAPPRE:IEC , CAPPRE:ULCUL + CAPPRM:ASME + FREQ:60HZ + MOVOL:460V) + COOL:WATER **(28/11/2019 - ...)**	1X11

Legend:

CAPPRE:IEC - Component approval electrical:IEC
CAPPRE:ULCUL - Component approval electrical:UL/cUL
CAPPRM:AS1210 - Component approval mechanical:AS1210
CAPPRM:ASME - Component approval mechanical:ASME
CAPPRM:CE - Component approval mechanical:CE
CAPPRM:MHLW - Component approval mechanical:MHLW
CAPPRM:MOM - Component approval mechanical:MOM
COOL:AIR - Cooling:Air cooled
COOL:WATER - Cooling:Water cooled
FREQ:50HZ - Frequency:50 Hz
FREQ:60HZ - Frequency:60 Hz
IDRY:N - Integrated dryer:No
MODEL:GA75VP_16 - Model:GA 75VSD+
MOVOL:200V - Supply voltage:200 V
MOVOL:230V - Supply voltage:230 V
MOVOL:380V - Supply voltage:380 V
MOVOL:400V - Supply voltage:400 V
MOVOL:460V - Supply voltage:460 V
MOVOL:500V - Supply voltage:500 V
MOVOL:575V - Supply voltage:575 V

21.7 - Cubicle components GA 75L VSD+ - (200V-400V-500V/50Hz - IEC, 200V-380V-460V/60Hz - IEC, 230V-460V-575V/60Hz - UL-cUL) - Pack (28/11/2019 - ...)

((((CAPPRM:AS1210 , CAPPRM:CE , CAPPRM:MHLW , CAPPRM:MOM) + MOVOL:400V , CAPPRM:CE + COOL:AIR + MOVOL:500V) + FREQ:50HZ , ((MOVOL:380V , MOVOL:460V) + CAPPRM:ASME , CAPPRM:MHLW + MOVOL:460V) + FREQ:60HZ , CAPPRM:MHLW + COOL:AIR + MOVOL:200V) + CAPPRE:IEC , ((MOVOL:230V , MOVOL:575V) + COOL:AIR , MOVOL:460V) + CAPPRE:ULCUL + CAPPRM:ASME + FREQ:60HZ) + IDRY:N + MODEL:GA75VP_16

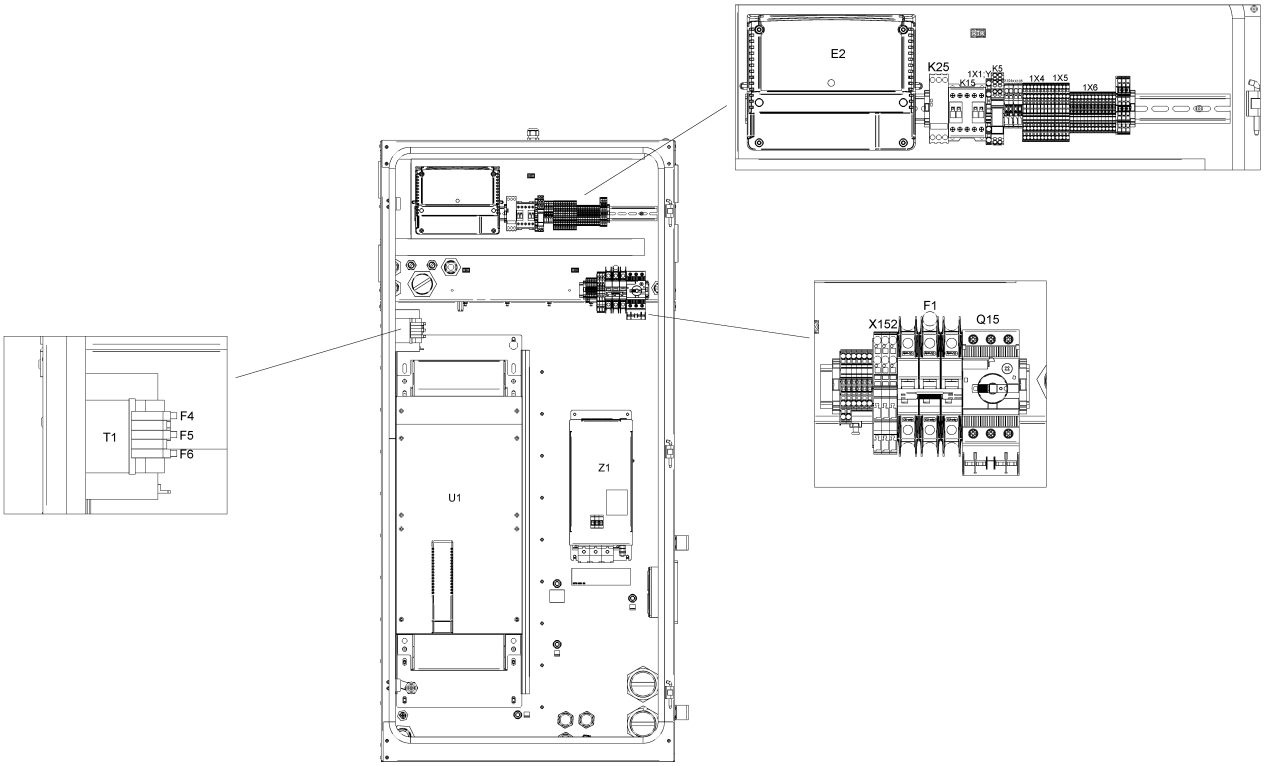

Ref	Part Number	Qty	Name	Validity	EL
	1088 0039 04	2	TERMINAL	**(25/02/2019 - 27/11/2019)** ((((MOVOL:380V , MOVOL:460V) + CAPPRM:ASME , CAPPRM:MHLW + MOVOL:460V) + FREQ:60HZ , (CAPPRM:AS1210 , CAPPRM:CE , CAPPRM:MHLW , CAPPRM:MOM) + FREQ:50HZ + MOVOL:400V) + CAPPRE:IEC , CAPPRE:ULCUL + CAPPRM:ASME + FREQ:60HZ + MOVOL:460V) + COOL:WATER **(28/11/2019 - ...)**	X104a
	1088 0037 99	2	PIN	**(25/02/2019 - 27/11/2019)** ((((MOVOL:380V , MOVOL:460V) + CAPPRM:ASME , CAPPRM:MHLW + MOVOL:460V) + FREQ:60HZ , (CAPPRM:AS1210 , CAPPRM:CE , CAPPRM:MHLW , CAPPRM:MOM) + FREQ:50HZ + MOVOL:400V) + CAPPRE:IEC , CAPPRE:ULCUL + CAPPRM:ASME + FREQ:60HZ + MOVOL:460V) + COOL:WATER **(28/11/2019 - ...)**	X104a/X105
	1088 0039 02	1	PLATE	**(25/02/2019 - 27/11/2019)** ((((MOVOL:380V , MOVOL:460V) + CAPPRM:ASME , CAPPRM:MHLW + MOVOL:460V) + FREQ:60HZ , (CAPPRM:AS1210 , CAPPRM:CE , CAPPRM:MHLW , CAPPRM:MOM) + FREQ:50HZ + MOVOL:400V) + CAPPRE:IEC , CAPPRE:ULCUL + CAPPRM:ASME + FREQ:60HZ + MOVOL:460V) + COOL:WATER **(28/11/2019 - ...)**	X104a
	1088 0039 07	2	TERMINAL	**(25/02/2019 - 27/11/2019)** ((((MOVOL:380V , MOVOL:460V) + CAPPRM:ASME , CAPPRM:MHLW + MOVOL:460V) + FREQ:60HZ , (CAPPRM:AS1210 , CAPPRM:CE , CAPPRM:MHLW , CAPPRM:MOM) + FREQ:50HZ + MOVOL:400V) + CAPPRE:IEC , CAPPRE:ULCUL + CAPPRM:ASME + FREQ:60HZ + MOVOL:460V) + COOL:WATER **(28/11/2019 - ...)**	X105
	1088 0039 05	1	PLATE	**(25/02/2019 - 27/11/2019)** ((((MOVOL:380V , MOVOL:460V) + CAPPRM:ASME , CAPPRM:MHLW + MOVOL:460V) + FREQ:60HZ , (CAPPRM:AS1210 , CAPPRM:CE , CAPPRM:MHLW , CAPPRM:MOM) + FREQ:50HZ + MOVOL:400V) + CAPPRE:IEC , CAPPRE:ULCUL + CAPPRM:ASME + FREQ:60HZ + MOVOL:460V) + COOL:WATER **(28/11/2019 - ...)**	X105
	1088 0039 34	13	TERMINAL	**(25/02/2019 - 27/11/2019)** ((((MOVOL:380V , MOVOL:460V) + CAPPRM:ASME , CAPPRM:MHLW + MOVOL:460V) + FREQ:60HZ , (CAPPRM:AS1210 , CAPPRM:CE , CAPPRM:MHLW , CAPPRM:MOM) + FREQ:50HZ + MOVOL:400V) + CAPPRE:IEC , CAPPRE:ULCUL + CAPPRM:ASME + FREQ:60HZ + MOVOL:460V) + COOL:WATER **(28/11/2019 - ...)**	1X6
	1088 0037 69	3	CONNECTOR	**(25/02/2019 - 27/11/2019)** ((((MOVOL:380V , MOVOL:460V) + CAPPRM:ASME , CAPPRM:MHLW + MOVOL:460V) + FREQ:60HZ , (CAPPRM:AS1210 , CAPPRM:CE , CAPPRM:MHLW , CAPPRM:MOM) + FREQ:50HZ + MOVOL:400V) + CAPPRE:IEC , CAPPRE:ULCUL + CAPPRM:ASME + FREQ:60HZ + MOVOL:460V) + COOL:WATER **(28/11/2019 - ...)**	1X7

Legend:

CAPPRE:IEC - Component approval electrical:IEC
CAPPRE:ULCUL - Component approval electrical:UL/cUL
CAPPRM:AS1210 - Component approval mechanical:AS1210
CAPPRM:ASME - Component approval mechanical:ASME
CAPPRM:CE - Component approval mechanical:CE
CAPPRM:MHLW - Component approval mechanical:MHLW
CAPPRM:MOM - Component approval mechanical:MOM
COOL:AIR - Cooling:Air cooled
COOL:WATER - Cooling:Water cooled
FREQ:50HZ - Frequency:50 Hz
FREQ:60HZ - Frequency:60 Hz
IDRY:N - Integrated dryer:No
MODEL:GA75VP_16 - Model:GA 75VSD+
MOVOL:200V - Supply voltage:200 V
MOVOL:230V - Supply voltage:230 V
MOVOL:380V - Supply voltage:380 V
MOVOL:400V - Supply voltage:400 V
MOVOL:460V - Supply voltage:460 V
MOVOL:500V - Supply voltage:500 V
MOVOL:575V - Supply voltage:575 V

21.7 - Cubicle components GA 75L VSD+ - (200V-400V-500V/50Hz - IEC, 200V-380V-460V/60Hz - IEC, 230V-460V-575V/60Hz - UL-cUL) - Pack (28/11/2019 - ...)

((((CAPPRM:AS1210 , CAPPRM:CE , CAPPRM:MHLW , CAPPRM:MOM) + MOVOL:400V , CAPPRM:CE + COOL:AIR + MOVOL:500V) + FREQ:50HZ , ((MOVOL:380V , MOVOL:460V) + CAPPRM:ASME , CAPPRM:MHLW + MOVOL:460V) + FREQ:60HZ , CAPPRM:MHLW + COOL:AIR + MOVOL:200V) + CAPPRE:IEC , ((MOVOL:230V , MOVOL:575V) + COOL:AIR , MOVOL:460V) + CAPPRE:ULCUL + CAPPRM:ASME + FREQ:60HZ) + IDRY:N + MODEL:GA75VP_16

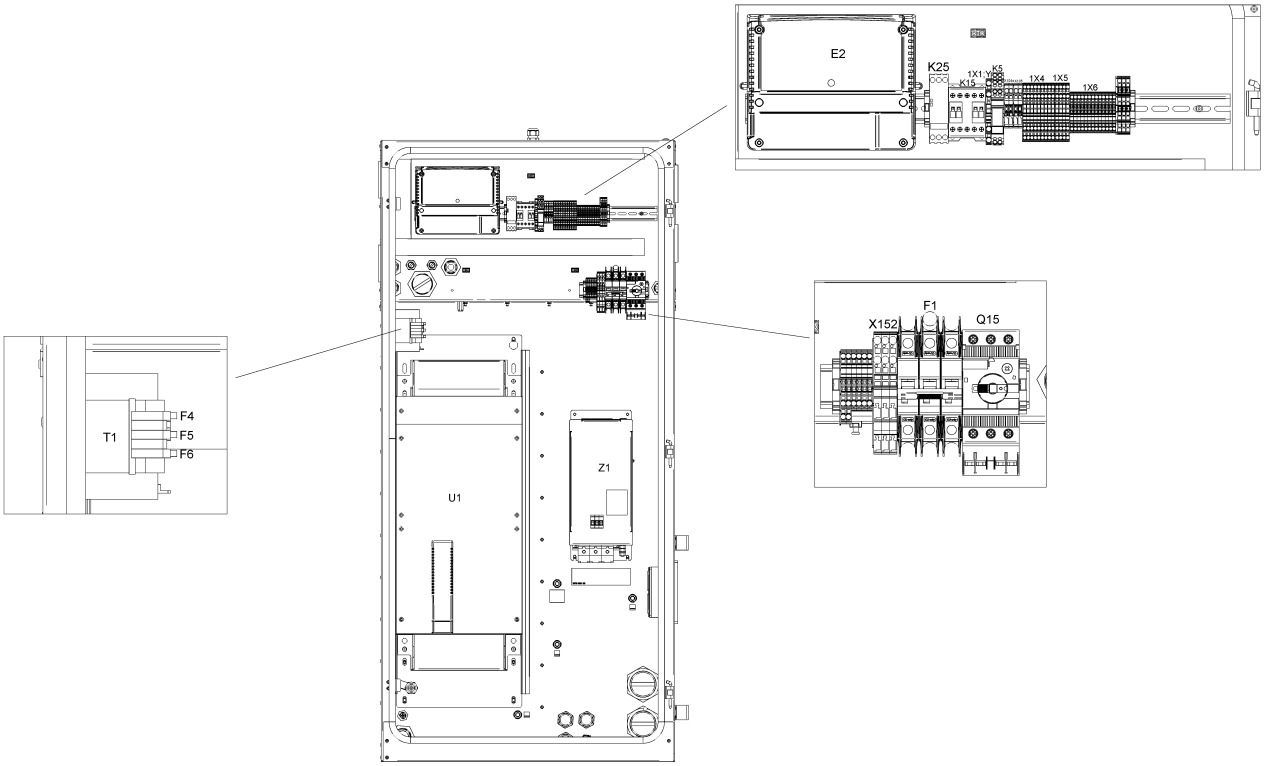

Ref	Part Number	Qty	Name	Validity	EL
	1088 0039 35	1	PLATE	**(25/02/2019 - 27/11/2019)** ((((MOVOL:380V , MOVOL:460V) + CAPPRM:ASME , CAPPRM:MHLW + MOVOL:460V) + FREQ:60HZ , (CAPPRM:AS1210 , CAPPRM:CE , CAPPRM:MHLW , CAPPRM:MOM) + FREQ:50HZ + MOVOL:400V) + CAPPRE:IEC , CAPPRE:ULCUL + CAPPRM:ASME + FREQ:60HZ + MOVOL:460V) + COOL:WATER **(28/11/2019 - ...)**	1X6
	1088 0040 37	1	END PLATE	**(25/02/2019 - 27/11/2019)** ((((MOVOL:380V , MOVOL:460V) + CAPPRM:ASME , CAPPRM:MHLW + MOVOL:460V) + FREQ:60HZ , (CAPPRM:AS1210 , CAPPRM:CE , CAPPRM:MHLW , CAPPRM:MOM) + FREQ:50HZ + MOVOL:400V) + CAPPRE:IEC , CAPPRE:ULCUL + CAPPRM:ASME + FREQ:60HZ + MOVOL:460V) + COOL:WATER **(28/11/2019 - ...)**	1X7
	1088 0039 36	9	TERMINAL	**(25/02/2019 - 27/11/2019)** ((((MOVOL:380V , MOVOL:460V) + CAPPRM:ASME , CAPPRM:MHLW + MOVOL:460V) + FREQ:60HZ , (CAPPRM:AS1210 , CAPPRM:CE , CAPPRM:MHLW , CAPPRM:MOM) + FREQ:50HZ + MOVOL:400V) + CAPPRE:IEC , CAPPRE:ULCUL + CAPPRM:ASME + FREQ:60HZ + MOVOL:460V) + COOL:WATER **(28/11/2019 - ...)**	1X4
	1088 0039 36	4	TERMINAL	**(25/02/2019 - 27/11/2019)** ((((MOVOL:380V , MOVOL:460V) + CAPPRM:ASME , CAPPRM:MHLW + MOVOL:460V) + FREQ:60HZ , (CAPPRM:AS1210 , CAPPRM:CE , CAPPRM:MHLW , CAPPRM:MOM) + FREQ:50HZ + MOVOL:400V) + CAPPRE:IEC , CAPPRE:ULCUL + CAPPRM:ASME + FREQ:60HZ + MOVOL:460V) + COOL:WATER **(28/11/2019 - ...)**	1X6
	1088 0039 37	1	END PLATE	**(25/02/2019 - 27/11/2019)** ((((MOVOL:380V , MOVOL:460V) + CAPPRM:ASME , CAPPRM:MHLW + MOVOL:460V) + FREQ:60HZ , (CAPPRM:AS1210 , CAPPRM:CE , CAPPRM:MHLW , CAPPRM:MOM) + FREQ:50HZ + MOVOL:400V) + CAPPRE:IEC , CAPPRE:ULCUL + CAPPRM:ASME + FREQ:60HZ + MOVOL:460V) + COOL:WATER **(28/11/2019 - ...)**	1X4
	1088 0039 37	1	END PLATE	**(25/02/2019 - 27/11/2019)** ((((MOVOL:380V , MOVOL:460V) + CAPPRM:ASME , CAPPRM:MHLW + MOVOL:460V) + FREQ:60HZ , (CAPPRM:AS1210 , CAPPRM:CE , CAPPRM:MHLW , CAPPRM:MOM) + FREQ:50HZ + MOVOL:400V) + CAPPRE:IEC , CAPPRE:ULCUL + CAPPRM:ASME + FREQ:60HZ + MOVOL:460V) + COOL:WATER **(28/11/2019 - ...)**	1X6
	1088 0039 37	1	END PLATE	**(25/02/2019 - 27/11/2019)** ((((MOVOL:380V , MOVOL:460V) + CAPPRM:ASME , CAPPRM:MHLW + MOVOL:460V) + FREQ:60HZ , (CAPPRM:AS1210 , CAPPRM:CE , CAPPRM:MHLW , CAPPRM:MOM) + FREQ:50HZ + MOVOL:400V) + CAPPRE:IEC , CAPPRE:ULCUL + CAPPRM:ASME + FREQ:60HZ + MOVOL:460V) + COOL:WATER **(28/11/2019 - ...)**	1X1:Y/D

Legend:

CAPPRE:IEC - Component approval electrical:IEC
CAPPRE:ULCUL - Component approval electrical:UL/cUL
CAPPRM:AS1210 - Component approval mechanical:AS1210
CAPPRM:ASME - Component approval mechanical:ASME
CAPPRM:CE - Component approval mechanical:CE
CAPPRM:MHLW - Component approval mechanical:MHLW
CAPPRM:MOM - Component approval mechanical:MOM
COOL:AIR - Cooling:Air cooled
COOL:WATER - Cooling:Water cooled
FREQ:50HZ - Frequency:50 Hz
FREQ:60HZ - Frequency:60 Hz
IDRY:N - Integrated dryer:No
MODEL:GA75VP_16 - Model:GA 75VSD+
MOVOL:200V - Supply voltage:200 V
MOVOL:230V - Supply voltage:230 V
MOVOL:380V - Supply voltage:380 V
MOVOL:400V - Supply voltage:400 V
MOVOL:460V - Supply voltage:460 V
MOVOL:500V - Supply voltage:500 V
MOVOL:575V - Supply voltage:575 V

21.7 - Cubicle components GA 75L VSD+ - (200V-400V-500V/50Hz - IEC, 200V-380V-460V/60Hz - IEC, 230V-460V-575V/60Hz - UL-cUL) - Pack (28/11/2019 - ...)

((((CAPPRM:AS1210 , CAPPRM:CE , CAPPRM:MHLW , CAPPRM:MOM) + MOVOL:400V , CAPPRM:CE + COOL:AIR + MOVOL:500V) + FREQ:50HZ , ((MOVOL:380V , MOVOL:460V) + CAPPRM:ASME , CAPPRM:MHLW + MOVOL:460V) + FREQ:60HZ , CAPPRM:MHLW + COOL:AIR + MOVOL:200V) + CAPPRE:IEC , ((MOVOL:230V , MOVOL:575V) + COOL:AIR , MOVOL:460V) + CAPPRE:ULCUL + CAPPRM:ASME + FREQ:60HZ) + IDRY:N + MODEL:GA75VP_16

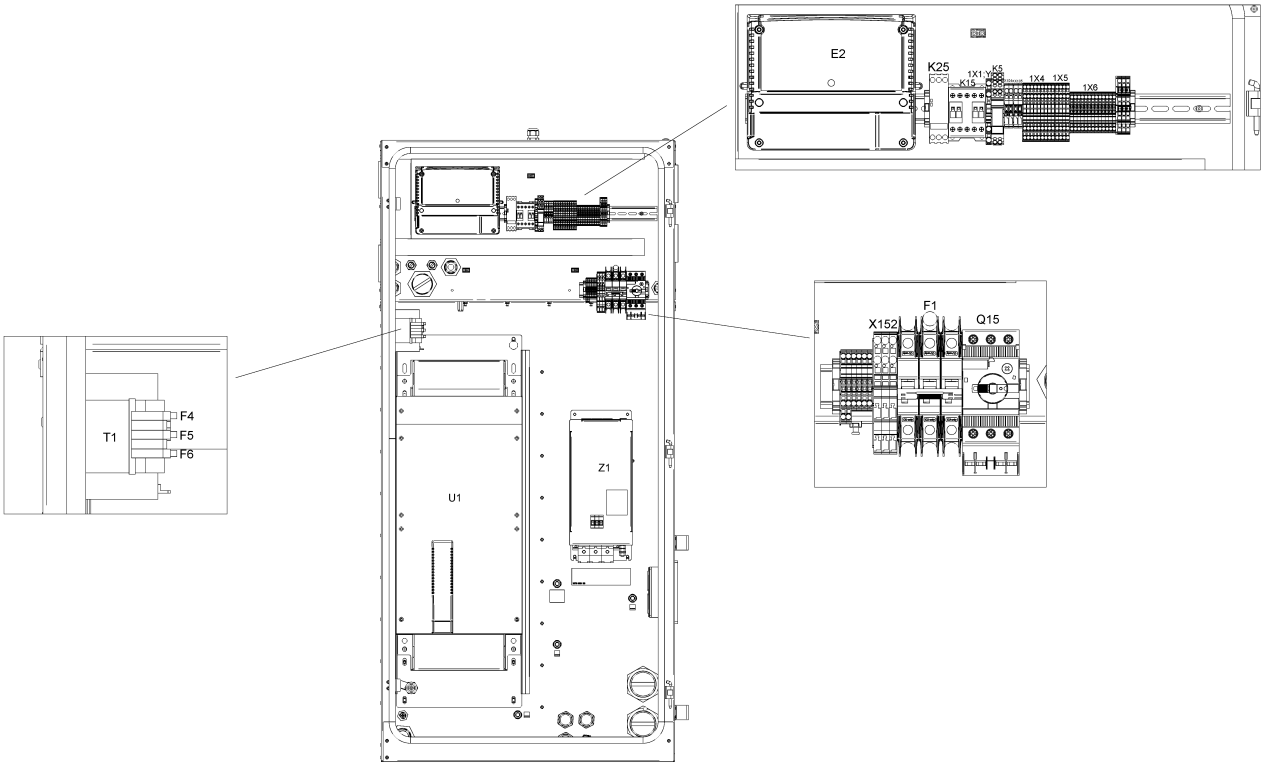

21.7 - Cubicle components GA 75L VSD+ - (200V-400V-500V/50Hz - IEC, 200V-380V-460V/60Hz - IEC, 230V-460V-575V/60Hz - UL-cUL) - Pack (28/11/2019 - ...)

((((CAPPRM:AS1210 , CAPPRM:CE , CAPPRM:MHLW , CAPPRM:MOM) + MOVOL:400V , CAPPRM:CE + COOL:AIR + MOVOL:500V) + FREQ:50HZ , ((MOVOL:380V , MOVOL:460V) + CAPPRM:ASME , CAPPRM:MHLW + MOVOL:460V) + FREQ:60HZ , CAPPRM:MHLW + COOL:AIR + MOVOL:200V) + CAPPRE:IEC , ((MOVOL:230V , MOVOL:575V) + COOL:AIR , MOVOL:460V) + CAPPRE:ULCUL + CAPPRM:ASME + FREQ:60HZ) + IDRY:N + MODEL:GA75VP_16

Ref	Part Number	Qty	Name	Validity	EL
	1088 0037 81	1	CONNECTOR	**(25/02/2019 - 27/11/2019)** ((((MOVOL:380V , MOVOL:460V) + CAPPRM:ASME , CAPPRM:MHLW + MOVOL:460V) + FREQ:60HZ , (CAPPRM:AS1210 , CAPPRM:CE , CAPPRM:MHLW , CAPPRM:MOM) + FREQ:50HZ + MOVOL:400V) + CAPPRE:IEC , CAPPRE:ULCUL + CAPPRM:ASME + FREQ:60HZ + MOVOL:460V) + COOL:WATER **(28/11/2019 - ...)**	2X27
	1088 0037 80	1	CONNECTOR	**(25/02/2019 - 27/11/2019)** ((((MOVOL:380V , MOVOL:460V) + CAPPRM:ASME , CAPPRM:MHLW + MOVOL:460V) + FREQ:60HZ , (CAPPRM:AS1210 , CAPPRM:CE , CAPPRM:MHLW , CAPPRM:MOM) + FREQ:50HZ + MOVOL:400V) + CAPPRE:IEC , CAPPRE:ULCUL + CAPPRM:ASME + FREQ:60HZ + MOVOL:460V) + COOL:WATER **(28/11/2019 - ...)**	2X28
	1088 0031 32	1	CONNECTOR	**(25/02/2019 - 27/11/2019)** ((((MOVOL:380V , MOVOL:460V) + CAPPRM:ASME , CAPPRM:MHLW + MOVOL:460V) + FREQ:60HZ , (CAPPRM:AS1210 , CAPPRM:CE , CAPPRM:MHLW , CAPPRM:MOM) + FREQ:50HZ + MOVOL:400V) + CAPPRE:IEC , CAPPRE:ULCUL + CAPPRM:ASME + FREQ:60HZ + MOVOL:460V) + COOL:WATER **(28/11/2019 - ...)**	2X30
	1088 0031 26	1	CONNECTOR 6-POLE	**(25/02/2019 - 27/11/2019)** ((((MOVOL:380V , MOVOL:460V) + CAPPRM:ASME , CAPPRM:MHLW + MOVOL:460V) + FREQ:60HZ , (CAPPRM:AS1210 , CAPPRM:CE , CAPPRM:MHLW , CAPPRM:MOM) + FREQ:50HZ + MOVOL:400V) + CAPPRE:IEC , CAPPRE:ULCUL + CAPPRM:ASME + FREQ:60HZ + MOVOL:460V) + COOL:WATER **(28/11/2019 - ...)**	2X31
	~~1089 9664 06~~	1	SWITCH	**(25/02/2019 - 27/11/2019)** ((((MOVOL:380V , MOVOL:460V) + CAPPRM:ASME , CAPPRM:MHLW + MOVOL:460V) + FREQ:60HZ , (CAPPRM:AS1210 , CAPPRM:CE , CAPPRM:MHLW , CAPPRM:MOM) + FREQ:50HZ + MOVOL:400V) + CAPPRE:IEC , CAPPRE:ULCUL + CAPPRM:ASME + FREQ:60HZ + MOVOL:460V) + COOL:WATER **(28/11/2019 - ...)**	Q15
	Substituted by:	1089 9551 97 - AUX.CONTACT CIRCUIT BREAKER (quantity: 1)			
	1089 9551 18	1	CIRCUIT BREAKER	**(25/02/2019 - 27/11/2019)** ((((MOVOL:380V , MOVOL:460V) + CAPPRM:ASME , CAPPRM:MHLW + MOVOL:460V) + FREQ:60HZ , (CAPPRM:AS1210 , CAPPRM:CE , CAPPRM:MHLW , CAPPRM:MOM) + FREQ:50HZ + MOVOL:400V) + CAPPRE:IEC , CAPPRE:ULCUL + CAPPRM:ASME + FREQ:60HZ + MOVOL:460V) + COOL:WATER **(28/11/2019 - ...)**	Q15
	1088 0038 26	1	TERMINAL	**(25/02/2019 - 27/11/2019)** ((((MOVOL:380V , MOVOL:460V) + CAPPRM:ASME , CAPPRM:MHLW + MOVOL:460V) + FREQ:60HZ , (CAPPRM:AS1210 , CAPPRM:CE , CAPPRM:MHLW , CAPPRM:MOM) + FREQ:50HZ + MOVOL:400V) + CAPPRE:IEC , CAPPRE:ULCUL + CAPPRM:ASME + FREQ:60HZ + MOVOL:460V) + COOL:WATER **(28/11/2019 - ...)**	1X1:Y/D

Legend:

CAPPRE:IEC - Component approval electrical:IEC
CAPPRE:ULCUL - Component approval electrical:UL/cUL
CAPPRM:AS1210 - Component approval mechanical:AS1210
CAPPRM:ASME - Component approval mechanical:ASME
CAPPRM:CE - Component approval mechanical:CE
CAPPRM:MHLW - Component approval mechanical:MHLW
CAPPRM:MOM - Component approval mechanical:MOM
COOL:AIR - Cooling:Air cooled
COOL:WATER - Cooling:Water cooled
FREQ:50HZ - Frequency:50 Hz
FREQ:60HZ - Frequency:60 Hz
IDRY:N - Integrated dryer:No
MODEL:GA75VP_16 - Model:GA 75VSD+
MOVOL:200V - Supply voltage:200 V
MOVOL:230V - Supply voltage:230 V
MOVOL:380V - Supply voltage:380 V
MOVOL:400V - Supply voltage:400 V
MOVOL:460V - Supply voltage:460 V
MOVOL:500V - Supply voltage:500 V
MOVOL:575V - Supply voltage:575 V

21.7 - Cubicle components GA 75L VSD+ - (200V-400V-500V/50Hz - IEC, 200V-380V-460V/60Hz - IEC, 230V-460V-575V/60Hz - UL-cUL) - Pack (28/11/2019 - ...)

((((CAPPRM:AS1210 , CAPPRM:CE , CAPPRM:MHLW , CAPPRM:MOM) + MOVOL:400V , CAPPRM:CE + COOL:AIR + MOVOL:500V) + FREQ:50HZ , ((MOVOL:380V , MOVOL:460V) + CAPPRM:ASME , CAPPRM:MHLW + MOVOL:460V) + FREQ:60HZ , CAPPRM:MHLW + COOL:AIR + MOVOL:200V) + CAPPRE:IEC , ((MOVOL:230V , MOVOL:575V) + COOL:AIR , MOVOL:460V) + CAPPRE:ULCUL + CAPPRM:ASME + FREQ:60HZ) + IDRY:N + MODEL:GA75VP_16

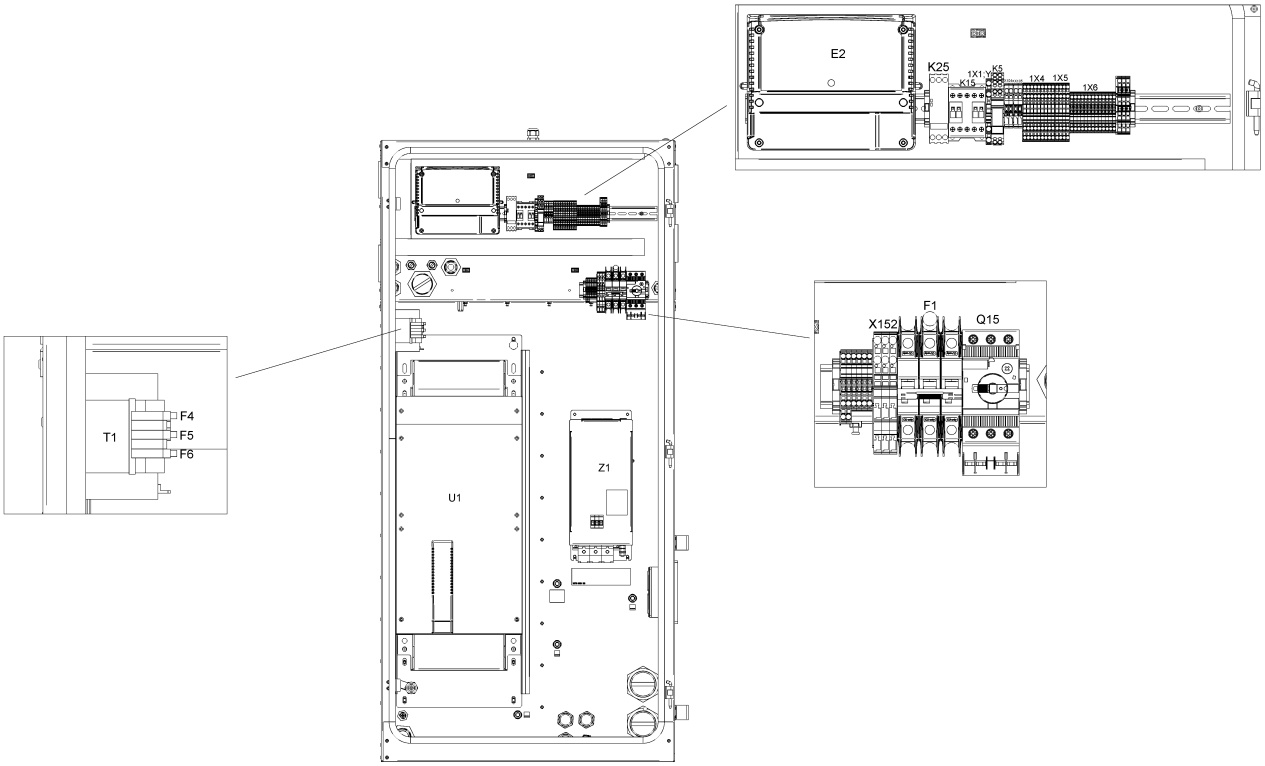

21.7 - Cubicle components GA 75L VSD+ - (200V-400V-500V/50Hz - IEC, 200V-380V-460V/60Hz - IEC, 230V-460V-575V/60Hz - UL-cUL) - Pack (28/11/2019 - ...)

((((CAPPRM:AS1210 , CAPPRM:CE , CAPPRM:MHLW , CAPPRM:MOM) + MOVOL:400V , CAPPRM:CE + COOL:AIR + MOVOL:500V) + FREQ:50HZ , ((MOVOL:380V , MOVOL:460V) + CAPPRM:ASME , CAPPRM:MHLW + MOVOL:460V) + FREQ:60HZ , CAPPRM:MHLW + COOL:AIR + MOVOL:200V) + CAPPRE:IEC , ((MOVOL:230V , MOVOL:575V) + COOL:AIR , MOVOL:460V) + CAPPRE:ULCUL + CAPPRM:ASME + FREQ:60HZ) + IDRY:N + MODEL:GA75VP_16

Ref	Part Number	Qty	Name	Validity	EL
	1089 9602 79	1	CONTACTOR 110 V	**(25/02/2019 - 27/11/2019)** ((((MOVOL:380V , MOVOL:460V) + CAPPRM:ASME , CAPPRM:MHLW + MOVOL:460V) + FREQ:60HZ , (CAPPRM:AS1210 , CAPPRM:CE , CAPPRM:MHLW , CAPPRM:MOM) + FREQ:50HZ + MOVOL:400V) + CAPPRE:IEC , CAPPRE:ULCUL + CAPPRM:ASME + FREQ:60HZ + MOVOL:460V) + COOL:WATER **(28/11/2019 - ...)**	K15
	1089 9461 26	1	PHASE SEQUENCE RELAY	**(25/02/2019 - 27/11/2019)** ((((MOVOL:380V , MOVOL:460V) + CAPPRM:ASME , CAPPRM:MHLW + MOVOL:460V) + FREQ:60HZ , (CAPPRM:AS1210 , CAPPRM:CE , CAPPRM:MHLW , CAPPRM:MOM) + FREQ:50HZ + MOVOL:400V) + CAPPRE:IEC , CAPPRE:ULCUL + CAPPRM:ASME + FREQ:60HZ + MOVOL:460V) + COOL:WATER **(28/11/2019 - ...)**	K25
	1088 0032 17	1	RELAY 115 VAC	**(25/02/2019 - 27/11/2019)** ((((MOVOL:380V , MOVOL:460V) + CAPPRM:ASME , CAPPRM:MHLW + MOVOL:460V) + FREQ:60HZ , (CAPPRM:AS1210 , CAPPRM:CE , CAPPRM:MHLW , CAPPRM:MOM) + FREQ:50HZ + MOVOL:400V) + CAPPRE:IEC , CAPPRE:ULCUL + CAPPRM:ASME + FREQ:60HZ + MOVOL:460V) + COOL:WATER **(28/11/2019 - ...)**	K5
	0991 8011 21	AR	CABLE TRAY	**(25/02/2019 - 27/11/2019)** ((((MOVOL:380V , MOVOL:460V) + CAPPRM:ASME , CAPPRM:MHLW + MOVOL:460V) + FREQ:60HZ , (CAPPRM:AS1210 , CAPPRM:CE , CAPPRM:MHLW , CAPPRM:MOM) + FREQ:50HZ + MOVOL:400V) + CAPPRE:IEC , CAPPRE:ULCUL + CAPPRM:ASME + FREQ:60HZ + MOVOL:460V) + COOL:WATER **(28/11/2019 - ...)**	L=1384mm
	0697 9811 16	1	PLUG	**(25/02/2019 - 27/11/2019)** ((((MOVOL:380V , MOVOL:460V) + CAPPRM:ASME , CAPPRM:MHLW + MOVOL:460V) + FREQ:60HZ , (CAPPRM:AS1210 , CAPPRM:CE , CAPPRM:MHLW , CAPPRM:MOM) + FREQ:50HZ + MOVOL:400V) + CAPPRE:IEC , CAPPRE:ULCUL + CAPPRM:ASME + FREQ:60HZ + MOVOL:460V) + COOL:WATER **(28/11/2019 - ...)**	
	Electrical legend:	Plug for Dryer			
	0989 3700 47	1	LOCKNUT	**(25/02/2019 - 27/11/2019)** ((((MOVOL:380V , MOVOL:460V) + CAPPRM:ASME , CAPPRM:MHLW + MOVOL:460V) + FREQ:60HZ , (CAPPRM:AS1210 , CAPPRM:CE , CAPPRM:MHLW , CAPPRM:MOM) + FREQ:50HZ + MOVOL:400V) + CAPPRE:IEC , CAPPRE:ULCUL + CAPPRM:ASME + FREQ:60HZ + MOVOL:460V) + COOL:WATER **(28/11/2019 - ...)**	
	Electrical legend:	Locknut for dryer			
	0697 9811 11	2	PLUG	**(25/02/2019 - 27/11/2019)** ((((MOVOL:380V , MOVOL:460V) + CAPPRM:ASME , CAPPRM:MHLW + MOVOL:460V) + FREQ:60HZ , (CAPPRM:AS1210 , CAPPRM:CE , CAPPRM:MHLW , CAPPRM:MOM) + FREQ:50HZ + MOVOL:400V) + CAPPRE:IEC , CAPPRE:ULCUL + CAPPRM:ASME + FREQ:60HZ + MOVOL:460V) + COOL:WATER **(28/11/2019 - ...)**	
	Electrical legend:	Plug for FF Drain/LAT			

Legend:

CAPPRE:IEC - Component approval electrical:IEC
CAPPRE:ULCUL - Component approval electrical:UL/cUL
CAPPRM:AS1210 - Component approval mechanical:AS1210
CAPPRM:ASME - Component approval mechanical:ASME
CAPPRM:CE - Component approval mechanical:CE
CAPPRM:MHLW - Component approval mechanical:MHLW
CAPPRM:MOM - Component approval mechanical:MOM
COOL:AIR - Cooling:Air cooled
COOL:WATER - Cooling:Water cooled
FREQ:50HZ - Frequency:50 Hz
FREQ:60HZ - Frequency:60 Hz
IDRY:N - Integrated dryer:No
MODEL:GA75VP_16 - Model:GA 75VSD+
MOVOL:200V - Supply voltage:200 V
MOVOL:230V - Supply voltage:230 V
MOVOL:380V - Supply voltage:380 V
MOVOL:400V - Supply voltage:400 V
MOVOL:460V - Supply voltage:460 V
MOVOL:500V - Supply voltage:500 V
MOVOL:575V - Supply voltage:575 V

21.7 - Cubicle components GA 75L VSD+ - (200V-400V-500V/50Hz - IEC, 200V-380V-460V/60Hz - IEC, 230V-460V-575V/60Hz - UL-cUL) - Pack (28/11/2019 - ...)

((((CAPPRM:AS1210 , CAPPRM:CE , CAPPRM:MHLW , CAPPRM:MOM) + MOVOL:400V , CAPPRM:CE + COOL:AIR + MOVOL:500V) + FREQ:50HZ , ((MOVOL:380V , MOVOL:460V) + CAPPRM:ASME , CAPPRM:MHLW + MOVOL:460V) + FREQ:60HZ , CAPPRM:MHLW + COOL:AIR + MOVOL:200V) + CAPPRE:IEC , ((MOVOL:230V , MOVOL:575V) + COOL:AIR , MOVOL:460V) + CAPPRE:ULCUL + CAPPRM:ASME + FREQ:60HZ) + IDRY:N + MODEL:GA75VP_16

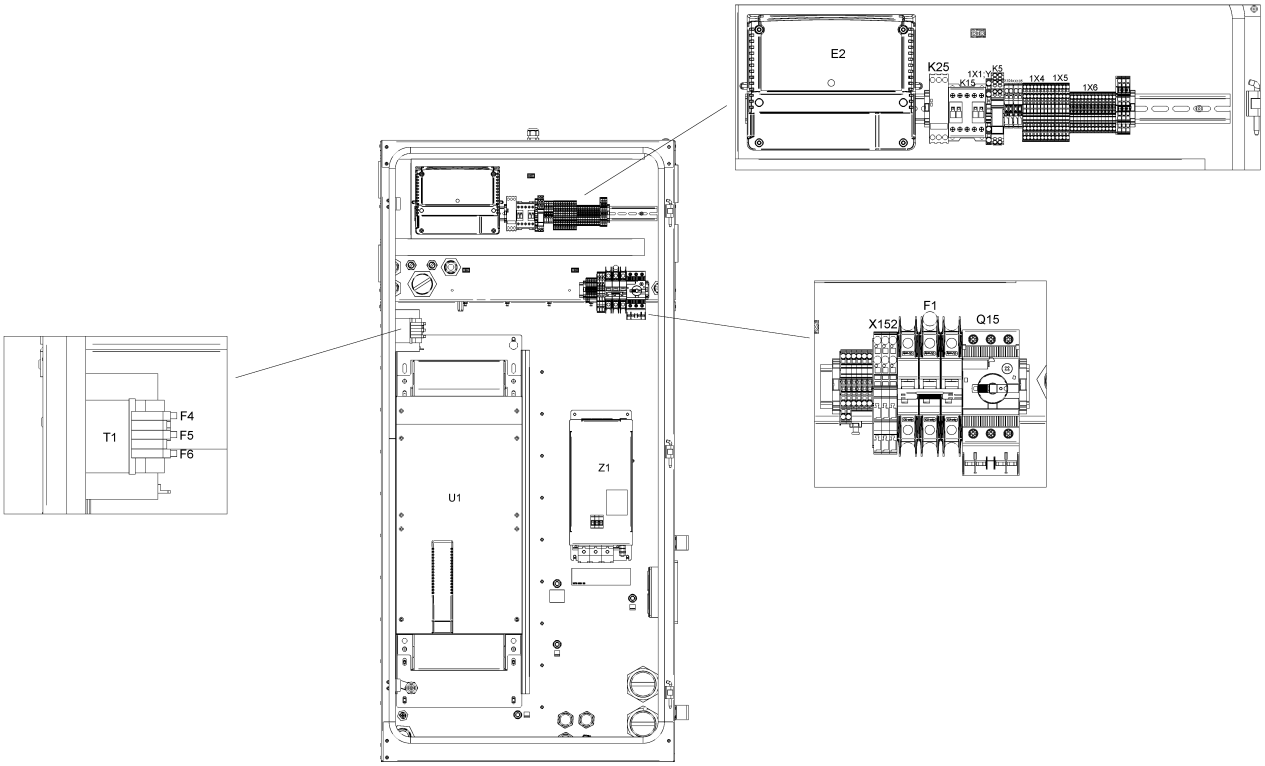

Ref	Part Number	Qty	Name	Validity	EL
	0989 3700 42	2	NUT	**(25/02/2019 - 27/11/2019)** ((((MOVOL:380V , MOVOL:460V) + CAPPRM:ASME , CAPPRM:MHLW + MOVOL:460V) + FREQ:60HZ , (CAPPRM:AS1210 , CAPPRM:CE , CAPPRM:MHLW , CAPPRM:MOM) + FREQ:50HZ + MOVOL:400V) + CAPPRE:IEC , CAPPRE:ULCUL + CAPPRM:ASME + FREQ:60HZ + MOVOL:460V) + COOL:WATER **(28/11/2019 - ...)**	
	Electrical legend:	Locknut for FF Drain/LAT			
	1088 0031 13	1	CONNECTOR 13-POLE	**(25/02/2019 - 27/11/2019)** ((((MOVOL:380V , MOVOL:460V) + CAPPRM:ASME , CAPPRM:MHLW + MOVOL:460V) + FREQ:60HZ , (CAPPRM:AS1210 , CAPPRM:CE , CAPPRM:MHLW , CAPPRM:MOM) + FREQ:50HZ + MOVOL:400V) + CAPPRE:IEC , CAPPRE:ULCUL + CAPPRM:ASME + FREQ:60HZ + MOVOL:460V) + COOL:WATER **(28/11/2019 - ...)**	1X30
	1088 0037 82	1	CONNECTOR	**(25/02/2019 - 27/11/2019)** ((((MOVOL:380V , MOVOL:460V) + CAPPRM:ASME , CAPPRM:MHLW + MOVOL:460V) + FREQ:60HZ , (CAPPRM:AS1210 , CAPPRM:CE , CAPPRM:MHLW , CAPPRM:MOM) + FREQ:50HZ + MOVOL:400V) + CAPPRE:IEC , CAPPRE:ULCUL + CAPPRM:ASME + FREQ:60HZ + MOVOL:460V) + COOL:WATER **(28/11/2019 - ...)**	3X34
	0697 9811 13	1	PLUG	**(25/02/2019 - 27/11/2019)** ((((MOVOL:380V , MOVOL:460V) + CAPPRM:ASME , CAPPRM:MHLW + MOVOL:460V) + FREQ:60HZ , (CAPPRM:AS1210 , CAPPRM:CE , CAPPRM:MHLW , CAPPRM:MOM) + FREQ:50HZ + MOVOL:400V) + CAPPRE:IEC , CAPPRE:ULCUL + CAPPRM:ASME + FREQ:60HZ + MOVOL:460V) + COOL:WATER **(28/11/2019 - ...)**	
	Electrical legend:	Energy recovery			
	0989 3700 44	1	LOCKNUT	**(25/02/2019 - 27/11/2019)** ((((MOVOL:380V , MOVOL:460V) + CAPPRM:ASME , CAPPRM:MHLW + MOVOL:460V) + FREQ:60HZ , (CAPPRM:AS1210 , CAPPRM:CE , CAPPRM:MHLW , CAPPRM:MOM) + FREQ:50HZ + MOVOL:400V) + CAPPRE:IEC , CAPPRE:ULCUL + CAPPRM:ASME + FREQ:60HZ + MOVOL:460V) + COOL:WATER **(28/11/2019 - ...)**	
	Electrical legend:	Energy recovery			
	0697 9811 12	1	PLUG	**(25/02/2019 - 27/11/2019)** ((((MOVOL:380V , MOVOL:460V) + CAPPRM:ASME , CAPPRM:MHLW + MOVOL:460V) + FREQ:60HZ , (CAPPRM:AS1210 , CAPPRM:CE , CAPPRM:MHLW , CAPPRM:MOM) + FREQ:50HZ + MOVOL:400V) + CAPPRE:IEC , CAPPRE:ULCUL + CAPPRM:ASME + FREQ:60HZ + MOVOL:460V) + COOL:WATER **(28/11/2019 - ...)**	
	Electrical legend:	Control circuit of T10			
	0989 3700 43	1	NUT	**(25/02/2019 - 27/11/2019)** ((((MOVOL:380V , MOVOL:460V) + CAPPRM:ASME , CAPPRM:MHLW + MOVOL:460V) + FREQ:60HZ , (CAPPRM:AS1210 , CAPPRM:CE , CAPPRM:MHLW , CAPPRM:MOM) + FREQ:50HZ + MOVOL:400V) + CAPPRE:IEC , CAPPRE:ULCUL + CAPPRM:ASME + FREQ:60HZ + MOVOL:460V) + COOL:WATER **(28/11/2019 - ...)**	
	Electrical legend:	Control circuit of T10			

Legend:

CAPPRE:IEC - Component approval electrical:IEC
CAPPRE:ULCUL - Component approval electrical:UL/cUL
CAPPRM:AS1210 - Component approval mechanical:AS1210
CAPPRM:ASME - Component approval mechanical:ASME
CAPPRM:CE - Component approval mechanical:CE
CAPPRM:MHLW - Component approval mechanical:MHLW
CAPPRM:MOM - Component approval mechanical:MOM
COOL:AIR - Cooling:Air cooled
COOL:WATER - Cooling:Water cooled
FREQ:50HZ - Frequency:50 Hz
FREQ:60HZ - Frequency:60 Hz
IDRY:N - Integrated dryer:No
MODEL:GA75VP_16 - Model:GA 75VSD+
MOVOL:200V - Supply voltage:200 V
MOVOL:230V - Supply voltage:230 V
MOVOL:380V - Supply voltage:380 V
MOVOL:400V - Supply voltage:400 V
MOVOL:460V - Supply voltage:460 V
MOVOL:500V - Supply voltage:500 V
MOVOL:575V - Supply voltage:575 V

21.7 - Cubicle components GA 75L VSD+ - (200V-400V-500V/50Hz - IEC, 200V-380V-460V/60Hz - IEC, 230V-460V-575V/60Hz - UL-cUL) - Pack (28/11/2019 - ...)

((((CAPPRM:AS1210 , CAPPRM:CE , CAPPRM:MHLW , CAPPRM:MOM) + MOVOL:400V , CAPPRM:CE + COOL:AIR + MOVOL:500V) + FREQ:50HZ , ((MOVOL:380V , MOVOL:460V) + CAPPRM:ASME , CAPPRM:MHLW + MOVOL:460V) + FREQ:60HZ , CAPPRM:MHLW + COOL:AIR + MOVOL:200V) + CAPPRE:IEC , ((MOVOL:230V , MOVOL:575V) + COOL:AIR , MOVOL:460V) + CAPPRE:ULCUL + CAPPRM:ASME + FREQ:60HZ) + IDRY:N + MODEL:GA75VP_16

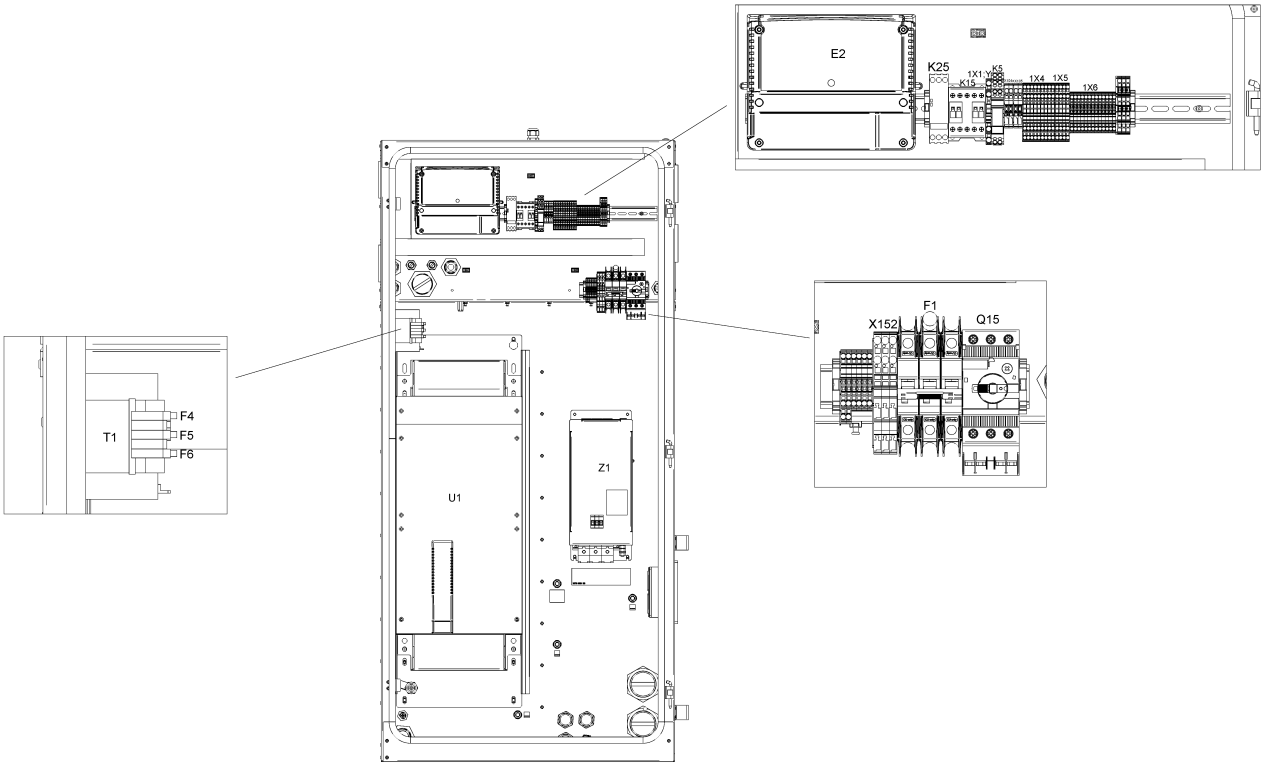

21.7 - Cubicle components GA 75L VSD+ - (200V-400V-500V/50Hz - IEC, 200V-380V-460V/60Hz - IEC, 230V-460V-575V/60Hz - UL-cUL) - Pack (28/11/2019 - ...)

((((CAPPRM:AS1210 , CAPPRM:CE , CAPPRM:MHLW , CAPPRM:MOM) + MOVOL:400V , CAPPRM:CE + COOL:AIR + MOVOL:500V) + FREQ:50HZ , ((MOVOL:380V , MOVOL:460V) + CAPPRM:ASME , CAPPRM:MHLW + MOVOL:460V) + FREQ:60HZ , CAPPRM:MHLW + COOL:AIR + MOVOL:200V) + CAPPRE:IEC , ((MOVOL:230V , MOVOL:575V) + COOL:AIR , MOVOL:460V) + CAPPRE:ULCUL + CAPPRM:ASME + FREQ:60HZ) + IDRY:N + MODEL:GA75VP_16

Ref	Part Number	Qty	Name	Validity	EL
	0697 9811 10	1	PLUG	**(25/02/2019 - 27/11/2019)** ((((MOVOL:380V , MOVOL:460V) + CAPPRM:ASME , CAPPRM:MHLW + MOVOL:460V) + FREQ:60HZ , (CAPPRM:AS1210 , CAPPRM:CE , CAPPRM:MHLW , CAPPRM:MOM) + FREQ:50HZ + MOVOL:400V) + CAPPRE:IEC , CAPPRE:ULCUL + CAPPRM:ASME + FREQ:60HZ + MOVOL:460V) + COOL:WATER **(28/11/2019 - ...)**	
	Electrical legend:	Plug for smartbox hole			
	0989 3700 41	1	LOCKNUT	**(25/02/2019 - 27/11/2019)** ((((MOVOL:380V , MOVOL:460V) + CAPPRM:ASME , CAPPRM:MHLW + MOVOL:460V) + FREQ:60HZ , (CAPPRM:AS1210 , CAPPRM:CE , CAPPRM:MHLW , CAPPRM:MOM) + FREQ:50HZ + MOVOL:400V) + CAPPRE:IEC , CAPPRE:ULCUL + CAPPRM:ASME + FREQ:60HZ + MOVOL:460V) + COOL:WATER **(28/11/2019 - ...)**	
	Electrical legend:	Nut for smartbox hole			
	1089 9556 37	1	AIR INLET WITH FILTER	**(25/02/2019 - 27/11/2019)** ((((MOVOL:380V , MOVOL:460V) + CAPPRM:ASME , CAPPRM:MHLW + MOVOL:460V) + FREQ:60HZ , (CAPPRM:AS1210 , CAPPRM:CE , CAPPRM:MHLW , CAPPRM:MOM) + FREQ:50HZ + MOVOL:400V) + CAPPRE:IEC , CAPPRE:ULCUL + CAPPRM:ASME + FREQ:60HZ + MOVOL:460V) + COOL:WATER **(28/11/2019 - ...)**	Fan Filter

Legend:

CAPPRE:IEC - Component approval electrical:IEC
CAPPRE:ULCUL - Component approval electrical:UL/cUL
CAPPRM:AS1210 - Component approval mechanical:AS1210
CAPPRM:ASME - Component approval mechanical:ASME
CAPPRM:CE - Component approval mechanical:CE
CAPPRM:MHLW - Component approval mechanical:MHLW
CAPPRM:MOM - Component approval mechanical:MOM
COOL:AIR - Cooling:Air cooled
COOL:WATER - Cooling:Water cooled
FREQ:50HZ - Frequency:50 Hz
FREQ:60HZ - Frequency:60 Hz
IDRY:N - Integrated dryer:No
MODEL:GA75VP_16 - Model:GA 75VSD+
MOVOL:200V - Supply voltage:200 V
MOVOL:230V - Supply voltage:230 V
MOVOL:380V - Supply voltage:380 V
MOVOL:400V - Supply voltage:400 V
MOVOL:460V - Supply voltage:460 V
MOVOL:500V - Supply voltage:500 V
MOVOL:575V - Supply voltage:575 V

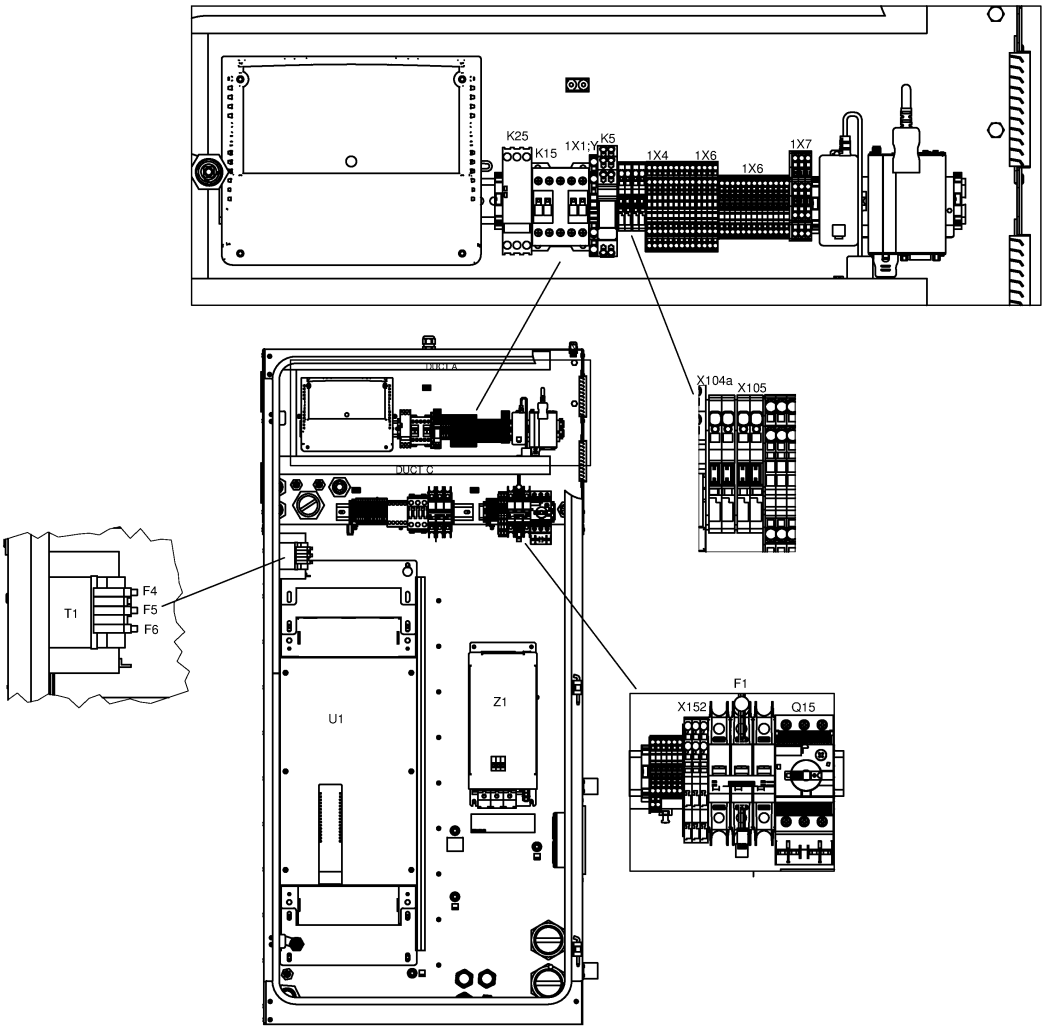
K25
K15
1X1:Y
K5
1X4
1X6
1X6
1X7
DUCT A
DUCT C
X104a
X105
T1
F4
F5
F6
U1
Z1
F1
X152
Q15

21.8 - Cubicle components GA 75L VSD+ - ((200V-400V-500V/50Hz, 460V/60Hz) - IEC, (230V-460V-575V/60Hz - UL-cUL)) - Full-Feature (28/08/2017 - 11/12/2018)

(((MOVOL:200V , MOVOL:400V , MOVOL:500V) + FREQ:50HZ , FREQ:60HZ + MOVOL:460V) + CAPPRE:IEC , (MOVOL:230V , MOVOL:460V , MOVOL:575V) + CAPPRE:ULCUL + FREQ:60HZ) + IDRY:Y + MODEL:GA75VP_16

Ref	Part Number	Qty	Name	Validity	EL
	1900 2202 03	1	CUBICLE	**(28/08/2017 - 11/12/2018)**	
	9820 3000 21	1	CUBICLE LAYOUT	**(28/08/2017 - 20/08/2018)** ((((CAPPRM:AS1210 , CAPPRM:CE , CAPPRM:MHLW , CAPPRM:MOM) + MOVOL:400V , CAPPRM:CE + MOVOL:500V , CAPPRM:MHLW + MOVOL:200V) + FREQ:50HZ , (CAPPRM:ASME , CAPPRM:MHLW) + FREQ:60HZ + MOVOL:460V) + CAPPRE:IEC , (MOVOL:230V , MOVOL:460V , MOVOL:575V) + CAPPRE:ULCUL + CAPPRM:ASME + FREQ:60HZ) + COOL:AIR **(21/08/2018 - 10/12/2018)** ((((CAPPRM:AS1210 , CAPPRM:CE , CAPPRM:MHLW , CAPPRM:MOM) + MOVOL:400V , (CAPPRM:CE + MOVOL:500V , CAPPRM:MHLW + MOVOL:200V) + COOL:AIR) + FREQ:50HZ , (CAPPRM:ASME , CAPPRM:MHLW) + FREQ:60HZ + MOVOL:460V) + CAPPRE:IEC , ((MOVOL:230V , MOVOL:575V) + COOL:AIR , MOVOL:460V) + CAPPRE:ULCUL + CAPPRM:ASME + FREQ:60HZ) **(11/12/2018 - 11/12/2018)** ((((CAPPRM:AS1210 , CAPPRM:CE , CAPPRM:MHLW , CAPPRM:MOM) + MOVOL:400V , (CAPPRM:CE + MOVOL:500V , CAPPRM:MHLW + MOVOL:200V) + COOL:AIR) + FREQ:50HZ , (CAPPRM:ASME , CAPPRM:MHLW) + COOL:WATER + FREQ:60HZ + MOVOL:460V) + CAPPRE:IEC , ((MOVOL:230V , MOVOL:575V) + COOL:AIR , MOVOL:460V) + CAPPRE:ULCUL + CAPPRM:ASME + FREQ:60HZ)	
	9820 3000 22	1	SERVICE DIAGRAM	**(28/08/2017 - 20/08/2018)** ((((CAPPRM:AS1210 , CAPPRM:CE , CAPPRM:MHLW , CAPPRM:MOM) + MOVOL:400V , CAPPRM:CE + MOVOL:500V , CAPPRM:MHLW + MOVOL:200V) + FREQ:50HZ , (CAPPRM:ASME , CAPPRM:MHLW) + FREQ:60HZ + MOVOL:460V) + CAPPRE:IEC , (MOVOL:230V , MOVOL:460V , MOVOL:575V) + CAPPRE:ULCUL + CAPPRM:ASME + FREQ:60HZ) + COOL:AIR **(21/08/2018 - 10/12/2018)** ((((CAPPRM:AS1210 , CAPPRM:CE , CAPPRM:MHLW , CAPPRM:MOM) + MOVOL:400V , (CAPPRM:CE + MOVOL:500V , CAPPRM:MHLW + MOVOL:200V) + COOL:AIR) + FREQ:50HZ , (CAPPRM:ASME , CAPPRM:MHLW) + FREQ:60HZ + MOVOL:460V) + CAPPRE:IEC , ((MOVOL:230V , MOVOL:575V) + COOL:AIR , MOVOL:460V) + CAPPRE:ULCUL + CAPPRM:ASME + FREQ:60HZ) **(11/12/2018 - 11/12/2018)** ((((CAPPRM:AS1210 , CAPPRM:CE , CAPPRM:MHLW , CAPPRM:MOM) + MOVOL:400V , (CAPPRM:CE + MOVOL:500V , CAPPRM:MHLW + MOVOL:200V) + COOL:AIR) + FREQ:50HZ , (CAPPRM:ASME , CAPPRM:MHLW) + COOL:WATER + FREQ:60HZ + MOVOL:460V) + CAPPRE:IEC , ((MOVOL:230V , MOVOL:575V) + COOL:AIR , MOVOL:460V) + CAPPRE:ULCUL + CAPPRM:ASME + FREQ:60HZ)	

Legend:

CAPPRE:IEC - Component approval electrical:IEC
CAPPRE:ULCUL - Component approval electrical:UL/cUL
CAPPRM:AS1210 - Component approval mechanical:AS1210
CAPPRM:ASME - Component approval mechanical:ASME
CAPPRM:CE - Component approval mechanical:CE
CAPPRM:MHLW - Component approval mechanical:MHLW
CAPPRM:MOM - Component approval mechanical:MOM
COOL:AIR - Cooling:Air cooled
COOL:WATER - Cooling:Water cooled
FREQ:50HZ - Frequency:50 Hz
FREQ:60HZ - Frequency:60 Hz
IDRY:Y - Integrated dryer:Yes
MODEL:GA75VP_16 - Model:GA 75VSD+
MOVOL:200V - Supply voltage:200 V
MOVOL:230V - Supply voltage:230 V
MOVOL:400V - Supply voltage:400 V
MOVOL:460V - Supply voltage:460 V
MOVOL:500V - Supply voltage:500 V
MOVOL:575V - Supply voltage:575 V

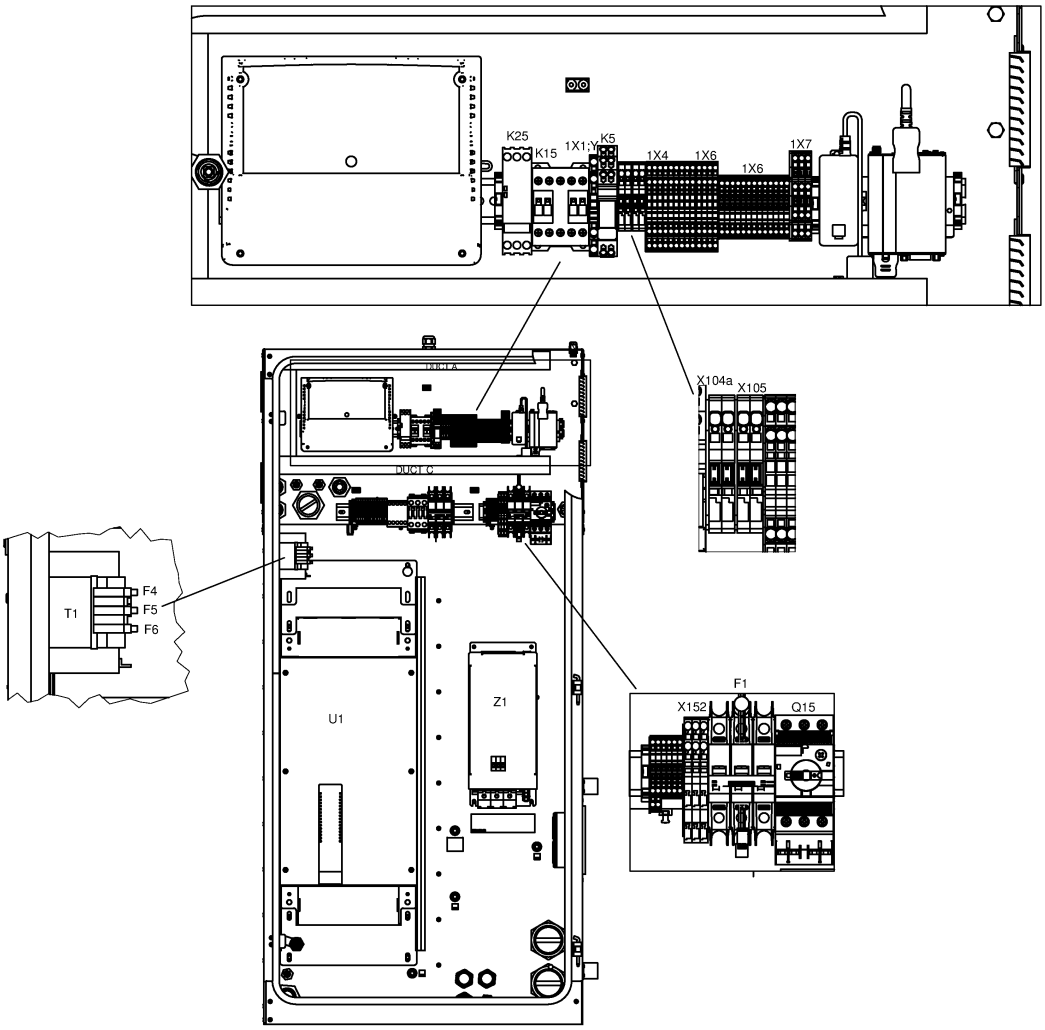
K25
K15
1X1:Y
K5
1X4
1X6
1X6
1X7
DUCT A
DUCT C
X104a
X105
T1
F4
F5
F6
U1
Z1
F1
X152
Q15

21.8 - Cubicle components GA 75L VSD+ - ((200V-400V-500V/50Hz, 460V/60Hz) - IEC, (230V-460V-575V/60Hz - UL-cUL)) - Full-Feature (28/08/2017 - 11/12/2018)

(((MOVOL:200V , MOVOL:400V , MOVOL:500V) + FREQ:50HZ , FREQ:60HZ + MOVOL:460V) + CAPPRE:IEC , (MOVOL:230V , MOVOL:460V , MOVOL:575V) + CAPPRE:ULCUL + FREQ:60HZ) + IDRY:Y + MODEL:GA75VP_16

Ref	Part Number	Qty	Name	Validity	EL
	1622 3798 70	1	WIRE HARNESS COMM CABLE	**(28/08/2017 - 20/08/2018)** ((((CAPPRM:AS1210 , CAPPRM:CE , CAPPRM:MHLW , CAPPRM:MOM) + MOVOL:400V , CAPPRM:CE + MOVOL:500V , CAPPRM:MHLW + MOVOL:200V) + FREQ:50HZ , (CAPPRM:ASME , CAPPRM:MHLW) + FREQ:60HZ + MOVOL:460V) + CAPPRE:IEC , (MOVOL:230V , MOVOL:460V , MOVOL:575V) + CAPPRE:ULCUL + CAPPRM:ASME + FREQ:60HZ) + COOL:AIR **(21/08/2018 - 10/12/2018)** ((((CAPPRM:AS1210 , CAPPRM:CE , CAPPRM:MHLW , CAPPRM:MOM) + MOVOL:400V , (CAPPRM:CE + MOVOL:500V , CAPPRM:MHLW + MOVOL:200V) + COOL:AIR) + FREQ:50HZ , (CAPPRM:ASME , CAPPRM:MHLW) + FREQ:60HZ + MOVOL:460V) + CAPPRE:IEC , ((MOVOL:230V , MOVOL:575V) + COOL:AIR , MOVOL:460V) + CAPPRE:ULCUL + CAPPRM:ASME + FREQ:60HZ) **(11/12/2018 - 11/12/2018)** ((((CAPPRM:AS1210 , CAPPRM:CE , CAPPRM:MHLW , CAPPRM:MOM) + MOVOL:400V , (CAPPRM:CE + MOVOL:500V , CAPPRM:MHLW + MOVOL:200V) + COOL:AIR) + FREQ:50HZ , (CAPPRM:ASME , CAPPRM:MHLW) + COOL:WATER + FREQ:60HZ + MOVOL:460V) + CAPPRE:IEC , ((MOVOL:230V , MOVOL:575V) + COOL:AIR , MOVOL:460V) + CAPPRE:ULCUL + CAPPRM:ASME + FREQ:60HZ)	-
	1622 5099 04	1	DI CHANE CABLE (1400MM)	**(28/08/2017 - 20/08/2018)** ((((CAPPRM:AS1210 , CAPPRM:CE , CAPPRM:MHLW , CAPPRM:MOM) + MOVOL:400V , CAPPRM:CE + MOVOL:500V , CAPPRM:MHLW + MOVOL:200V) + FREQ:50HZ , (CAPPRM:ASME , CAPPRM:MHLW) + FREQ:60HZ + MOVOL:460V) + CAPPRE:IEC , (MOVOL:230V , MOVOL:460V , MOVOL:575V) + CAPPRE:ULCUL + CAPPRM:ASME + FREQ:60HZ) + COOL:AIR **(21/08/2018 - 10/12/2018)** ((((CAPPRM:AS1210 , CAPPRM:CE , CAPPRM:MHLW , CAPPRM:MOM) + MOVOL:400V , (CAPPRM:CE + MOVOL:500V , CAPPRM:MHLW + MOVOL:200V) + COOL:AIR) + FREQ:50HZ , (CAPPRM:ASME , CAPPRM:MHLW) + FREQ:60HZ + MOVOL:460V) + CAPPRE:IEC , ((MOVOL:230V , MOVOL:575V) + COOL:AIR , MOVOL:460V) + CAPPRE:ULCUL + CAPPRM:ASME + FREQ:60HZ) **(11/12/2018 - 11/12/2018)** ((((CAPPRM:AS1210 , CAPPRM:CE , CAPPRM:MHLW , CAPPRM:MOM) + MOVOL:400V , (CAPPRM:CE + MOVOL:500V , CAPPRM:MHLW + MOVOL:200V) + COOL:AIR) + FREQ:50HZ , (CAPPRM:ASME , CAPPRM:MHLW) + COOL:WATER + FREQ:60HZ + MOVOL:460V) + CAPPRE:IEC , ((MOVOL:230V , MOVOL:575V) + COOL:AIR , MOVOL:460V) + CAPPRE:ULCUL + CAPPRM:ASME + FREQ:60HZ)	

Electrical legend: Comm Cable Loose supply

Legend:

CAPPRE:IEC - Component approval electrical:IEC
CAPPRM:ASME - Component approval mechanical:ASME
CAPPRM:MOM - Component approval mechanical:MOM
FREQ:50HZ - Frequency:50 Hz
MODEL:GA75VP_16 - Model:GA 75VSD+
MOVOL:400V - Supply voltage:400 V
MOVOL:575V - Supply voltage:575 V
CAPPRE:ULCUL - Component approval electrical:UL/cUL
CAPPRM:CE - Component approval mechanical:CE
COOL:AIR - Cooling:Air cooled
FREQ:60HZ - Frequency:60 Hz
MOVOL:200V - Supply voltage:200 V
MOVOL:460V - Supply voltage:460 V
CAPPRM:AS1210 - Component approval mechanical:AS1210
CAPPRM:MHLW - Component approval mechanical:MHLW
COOL:WATER - Cooling:Water cooled
IDRY:Y - Integrated dryer:Yes
MOVOL:230V - Supply voltage:230 V
MOVOL:500V - Supply voltage:500 V

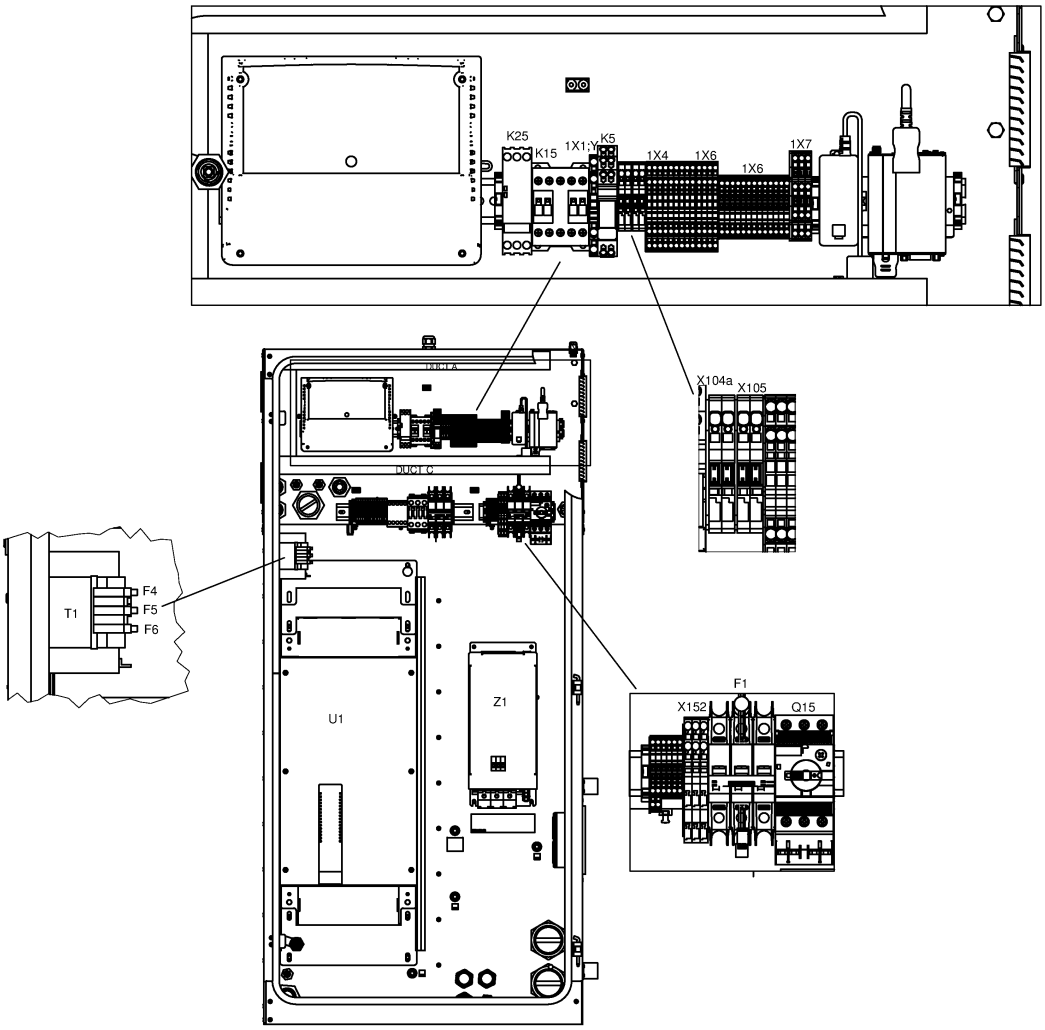
K25
K15
1X1:Y
K5
1X4
1X6
1X6
1X7
DUCT A
DUCT C
X104a
X105
T1
F4
F5
F6
U1
Z1
F1
X152
Q15

21.8 - Cubicle components GA 75L VSD+ - ((200V-400V-500V/50Hz, 460V/60Hz) - IEC, (230V-460V-575V/60Hz - UL-cUL)) - Full-Feature (28/08/2017 - 11/12/2018)

(((MOVOL:200V , MOVOL:400V , MOVOL:500V) + FREQ:50HZ , FREQ:60HZ + MOVOL:460V) + CAPPRE:IEC , (MOVOL:230V , MOVOL:460V , MOVOL:575V) + CAPPRE:ULCUL + FREQ:60HZ) + IDRY:Y + MODEL:GA75VP_16

Ref	Part Number	Qty	Name	Validity	EL
	1649 8001 22	1	CUBICLE	**(28/08/2017 - 20/08/2018)** ((((CAPPRM:AS1210 , CAPPRM:CE , CAPPRM:MHLW , CAPPRM:MOM) + MOVOL:400V , CAPPRM:CE + MOVOL:500V , CAPPRM:MHLW + MOVOL:200V) + FREQ:50HZ , (CAPPRM:ASME , CAPPRM:MHLW) + FREQ:60HZ + MOVOL:460V) + CAPPRE:IEC , (MOVOL:230V , MOVOL:460V , MOVOL:575V) + CAPPRE:ULCUL + CAPPRM:ASME + FREQ:60HZ) + COOL:AIR **(21/08/2018 - 10/12/2018)** ((((CAPPRM:AS1210 , CAPPRM:CE , CAPPRM:MHLW , CAPPRM:MOM) + MOVOL:400V , (CAPPRM:CE + MOVOL:500V , CAPPRM:MHLW + MOVOL:200V) + COOL:AIR) + FREQ:50HZ , (CAPPRM:ASME , CAPPRM:MHLW) + FREQ:60HZ + MOVOL:460V) + CAPPRE:IEC , ((MOVOL:230V , MOVOL:575V) + COOL:AIR , MOVOL:460V) + CAPPRE:ULCUL + CAPPRM:ASME + FREQ:60HZ) **(11/12/2018 - 11/12/2018)** ((((CAPPRM:AS1210 , CAPPRM:CE , CAPPRM:MHLW , CAPPRM:MOM) + MOVOL:400V , (CAPPRM:CE + MOVOL:500V , CAPPRM:MHLW + MOVOL:200V) + COOL:AIR) + FREQ:50HZ , (CAPPRM:ASME , CAPPRM:MHLW) + COOL:WATER + FREQ:60HZ + MOVOL:460V) + CAPPRE:IEC , ((MOVOL:230V , MOVOL:575V) + COOL:AIR , MOVOL:460V) + CAPPRE:ULCUL + CAPPRM:ASME + FREQ:60HZ)	-
•	1202 6584 02	AR	SEAL		-
	1649 8001 32	1	PLATE NEOS "D"	**(28/08/2017 - 20/08/2018)** ((((CAPPRM:AS1210 , CAPPRM:CE , CAPPRM:MHLW , CAPPRM:MOM) + MOVOL:400V , CAPPRM:CE + MOVOL:500V , CAPPRM:MHLW + MOVOL:200V) + FREQ:50HZ , (CAPPRM:ASME , CAPPRM:MHLW) + FREQ:60HZ + MOVOL:460V) + CAPPRE:IEC , (MOVOL:230V , MOVOL:460V , MOVOL:575V) + CAPPRE:ULCUL + CAPPRM:ASME + FREQ:60HZ) + COOL:AIR **(21/08/2018 - 10/12/2018)** ((((CAPPRM:AS1210 , CAPPRM:CE , CAPPRM:MHLW , CAPPRM:MOM) + MOVOL:400V , (CAPPRM:CE + MOVOL:500V , CAPPRM:MHLW + MOVOL:200V) + COOL:AIR) + FREQ:50HZ , (CAPPRM:ASME , CAPPRM:MHLW) + FREQ:60HZ + MOVOL:460V) + CAPPRE:IEC , ((MOVOL:230V , MOVOL:575V) + COOL:AIR , MOVOL:460V) + CAPPRE:ULCUL + CAPPRM:ASME + FREQ:60HZ) **(11/12/2018 - 11/12/2018)** ((((CAPPRM:AS1210 , CAPPRM:CE , CAPPRM:MHLW , CAPPRM:MOM) + MOVOL:400V , (CAPPRM:CE + MOVOL:500V , CAPPRM:MHLW + MOVOL:200V) + COOL:AIR) + FREQ:50HZ , (CAPPRM:ASME , CAPPRM:MHLW) + COOL:WATER + FREQ:60HZ + MOVOL:460V) + CAPPRE:IEC , ((MOVOL:230V , MOVOL:575V) + COOL:AIR , MOVOL:460V) + CAPPRE:ULCUL + CAPPRM:ASME + FREQ:60HZ)	-

Legend:

CAPPRE:IEC - Component approval electrical:IEC
CAPPRE:ULCUL - Component approval electrical:UL/cUL
CAPPRM:AS1210 - Component approval mechanical:AS1210
CAPPRM:ASME - Component approval mechanical:ASME
CAPPRM:CE - Component approval mechanical:CE
CAPPRM:MHLW - Component approval mechanical:MHLW
CAPPRM:MOM - Component approval mechanical:MOM
COOL:AIR - Cooling:Air cooled
COOL:WATER - Cooling:Water cooled
FREQ:50HZ - Frequency:50 Hz
FREQ:60HZ - Frequency:60 Hz
IDRY:Y - Integrated dryer:Yes
MODEL:GA75VP_16 - Model:GA 75VSD+
MOVOL:200V - Supply voltage:200 V
MOVOL:230V - Supply voltage:230 V
MOVOL:400V - Supply voltage:400 V
MOVOL:460V - Supply voltage:460 V
MOVOL:500V - Supply voltage:500 V
MOVOL:575V - Supply voltage:575 V

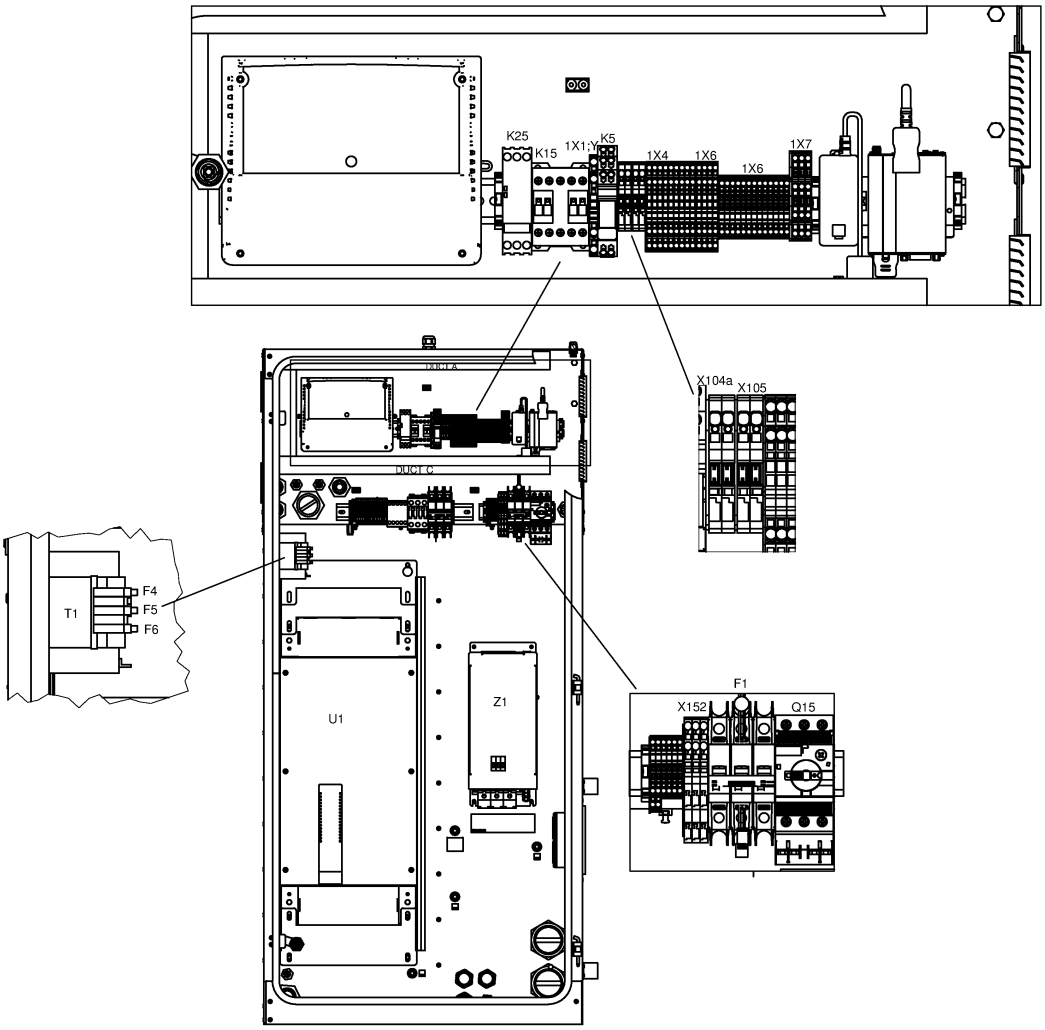
K25
K15
1X1:Y
K5
1X4
1X6
1X6
1X7
DUCT A
DUCT C
X104a
X105
T1
F4
F5
F6
U1
Z1
F1
X152
Q15

21.8 - Cubicle components GA 75L VSD+ - ((200V-400V-500V/50Hz, 460V/60Hz) - IEC, (230V-460V-575V/60Hz - UL-cUL)) - Full-Feature (28/08/2017 - 11/12/2018)

(((MOVOL:200V , MOVOL:400V , MOVOL:500V) + FREQ:50HZ , FREQ:60HZ + MOVOL:460V) + CAPPRE:IEC , (MOVOL:230V , MOVOL:460V , MOVOL:575V) + CAPPRE:ULCUL + FREQ:60HZ) + IDRY:Y + MODEL:GA75VP_16

Ref	Part Number	Qty	Name	Validity	EL
	1649 8003 85	1	MOUNTING PLATE-NEOS	**(28/08/2017 - 20/08/2018)** ((((CAPPRM:AS1210 , CAPPRM:CE , CAPPRM:MHLW , CAPPRM:MOM) + MOVOL:400V , CAPPRM:CE + MOVOL:500V , CAPPRM:MHLW + MOVOL:200V) + FREQ:50HZ , (CAPPRM:ASME , CAPPRM:MHLW) + FREQ:60HZ + MOVOL:460V) + CAPPRE:IEC , (MOVOL:230V , MOVOL:460V , MOVOL:575V) + CAPPRE:ULCUL + CAPPRM:ASME + FREQ:60HZ) + COOL:AIR **(21/08/2018 - 10/12/2018)** ((((CAPPRM:AS1210 , CAPPRM:CE , CAPPRM:MHLW , CAPPRM:MOM) + MOVOL:400V , (CAPPRM:CE + MOVOL:500V , CAPPRM:MHLW + MOVOL:200V) + COOL:AIR) + FREQ:50HZ , (CAPPRM:ASME , CAPPRM:MHLW) + FREQ:60HZ + MOVOL:460V) + CAPPRE:IEC , ((MOVOL:230V , MOVOL:575V) + COOL:AIR , MOVOL:460V) + CAPPRE:ULCUL + CAPPRM:ASME + FREQ:60HZ) **(11/12/2018 - 11/12/2018)** ((((CAPPRM:AS1210 , CAPPRM:CE , CAPPRM:MHLW , CAPPRM:MOM) + MOVOL:400V , (CAPPRM:CE + MOVOL:500V , CAPPRM:MHLW + MOVOL:200V) + COOL:AIR) + FREQ:50HZ , (CAPPRM:ASME , CAPPRM:MHLW) + COOL:WATER + FREQ:60HZ + MOVOL:460V) + CAPPRE:IEC , ((MOVOL:230V , MOVOL:575V) + COOL:AIR , MOVOL:460V) + CAPPRE:ULCUL + CAPPRM:ASME + FREQ:60HZ)	
	1649 8002 39	1	WIRE HARNESS	**(28/08/2017 - 20/08/2018)** ((((CAPPRM:AS1210 , CAPPRM:CE , CAPPRM:MHLW , CAPPRM:MOM) + MOVOL:400V , CAPPRM:CE + MOVOL:500V , CAPPRM:MHLW + MOVOL:200V) + FREQ:50HZ , (CAPPRM:ASME , CAPPRM:MHLW) + FREQ:60HZ + MOVOL:460V) + CAPPRE:IEC , (MOVOL:230V , MOVOL:460V , MOVOL:575V) + CAPPRE:ULCUL + CAPPRM:ASME + FREQ:60HZ) + COOL:AIR **(21/08/2018 - 10/12/2018)** ((((CAPPRM:AS1210 , CAPPRM:CE , CAPPRM:MHLW , CAPPRM:MOM) + MOVOL:400V , (CAPPRM:CE + MOVOL:500V , CAPPRM:MHLW + MOVOL:200V) + COOL:AIR) + FREQ:50HZ , (CAPPRM:ASME , CAPPRM:MHLW) + FREQ:60HZ + MOVOL:460V) + CAPPRE:IEC , ((MOVOL:230V , MOVOL:575V) + COOL:AIR , MOVOL:460V) + CAPPRE:ULCUL + CAPPRM:ASME + FREQ:60HZ) **(11/12/2018 - 11/12/2018)** ((((CAPPRM:AS1210 , CAPPRM:CE , CAPPRM:MHLW , CAPPRM:MOM) + MOVOL:400V , (CAPPRM:CE + MOVOL:500V , CAPPRM:MHLW + MOVOL:200V) + COOL:AIR) + FREQ:50HZ , (CAPPRM:ASME , CAPPRM:MHLW) + COOL:WATER + FREQ:60HZ + MOVOL:460V) + CAPPRE:IEC , ((MOVOL:230V , MOVOL:575V) + COOL:AIR , MOVOL:460V) + CAPPRE:ULCUL + CAPPRM:ASME + FREQ:60HZ)	
	Electrical legend:		Pressure switch (vessel) + pressure sensor vessel + pressure sensor outlet		
•	0698 5140 74	1	CABLE GLAND		

Legend:

CAPPRE:IEC - Component approval electrical:IEC
CAPPRM:ASME - Component approval mechanical:ASME
CAPPRM:MOM - Component approval mechanical:MOM
FREQ:50HZ - Frequency:50 Hz
MODEL:GA75VP_16 - Model:GA 75VSD+
MOVOL:400V - Supply voltage:400 V
MOVOL:575V - Supply voltage:575 V
CAPPRE:ULCUL - Component approval electrical:UL/cUL
CAPPRM:CE - Component approval mechanical:CE
COOL:AIR - Cooling:Air cooled
FREQ:60HZ - Frequency:60 Hz
MOVOL:200V - Supply voltage:200 V
MOVOL:460V - Supply voltage:460 V
CAPPRM:AS1210 - Component approval mechanical:AS1210
CAPPRM:MHLW - Component approval mechanical:MHLW
COOL:WATER - Cooling:Water cooled
IDRY:Y - Integrated dryer:Yes
MOVOL:230V - Supply voltage:230 V
MOVOL:500V - Supply voltage:500 V

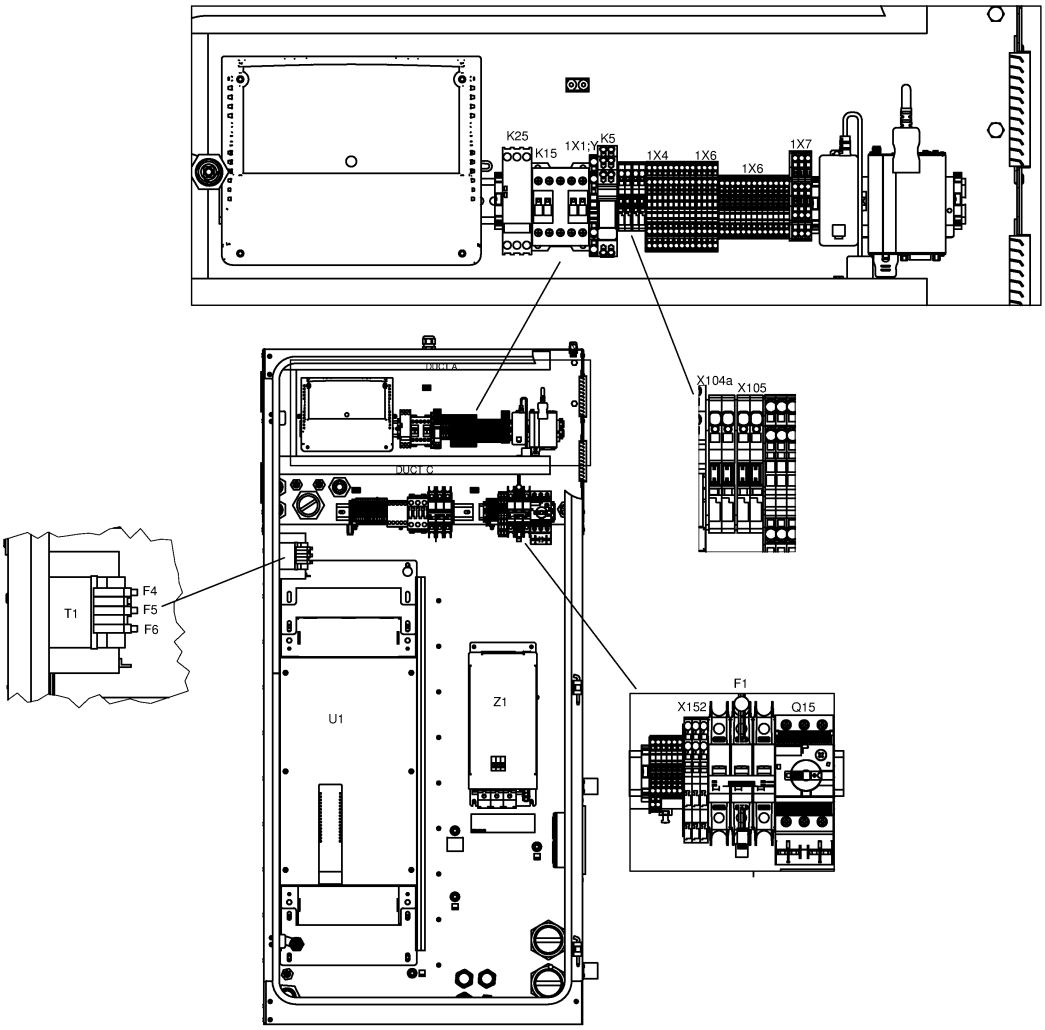
K25
K15
1X1:Y
K5
1X4
1X6
1X6
1X7
DUCT A
DUCT C
X104a
X105
T1
F4
F5
F6
U1
Z1
F1
X152
Q15

21.8 - Cubicle components GA 75L VSD+ - ((200V-400V-500V/50Hz, 460V/60Hz) - IEC, (230V-460V-575V/60Hz - UL-cUL)) - Full-Feature (28/08/2017 - 11/12/2018)

(((MOVOL:200V , MOVOL:400V , MOVOL:500V) + FREQ:50HZ , FREQ:60HZ + MOVOL:460V) + CAPPRE:IEC , (MOVOL:230V , MOVOL:460V , MOVOL:575V) + CAPPRE:ULCUL + FREQ:60HZ) + IDRY:Y + MODEL:GA75VP_16

Ref	Part Number	Qty	Name	Validity	EL
	1649 8002 40	1	WIRE HARNESS	**(28/08/2017 - 20/08/2018)** ((((CAPPRM:AS1210 , CAPPRM:CE , CAPPRM:MHLW , CAPPRM:MOM) + MOVOL:400V , CAPPRM:CE + MOVOL:500V , CAPPRM:MHLW + MOVOL:200V) + FREQ:50HZ , (CAPPRM:ASME , CAPPRM:MHLW) + FREQ:60HZ + MOVOL:460V) + CAPPRE:IEC , (MOVOL:230V , MOVOL:460V , MOVOL:575V) + CAPPRE:ULCUL + CAPPRM:ASME + FREQ:60HZ) + COOL:AIR **(21/08/2018 - 10/12/2018)** ((((CAPPRM:AS1210 , CAPPRM:CE , CAPPRM:MHLW , CAPPRM:MOM) + MOVOL:400V , (CAPPRM:CE + MOVOL:500V , CAPPRM:MHLW + MOVOL:200V) + COOL:AIR) + FREQ:50HZ , (CAPPRM:ASME , CAPPRM:MHLW) + FREQ:60HZ + MOVOL:460V) + CAPPRE:IEC , ((MOVOL:230V , MOVOL:575V) + COOL:AIR , MOVOL:460V) + CAPPRE:ULCUL + CAPPRM:ASME + FREQ:60HZ) **(11/12/2018 - 11/12/2018)** ((((CAPPRM:AS1210 , CAPPRM:CE , CAPPRM:MHLW , CAPPRM:MOM) + MOVOL:400V , (CAPPRM:CE + MOVOL:500V , CAPPRM:MHLW + MOVOL:200V) + COOL:AIR) + FREQ:50HZ , (CAPPRM:ASME , CAPPRM:MHLW) + COOL:WATER + FREQ:60HZ + MOVOL:460V) + CAPPRE:IEC , ((MOVOL:230V , MOVOL:575V) + COOL:AIR , MOVOL:460V) + CAPPRE:ULCUL + CAPPRM:ASME + FREQ:60HZ)	
	Electrical legend:	Temperature sensor element outlet + solenoids + ambient sensor			
•	0698 5140 74	1	CABLE GLAND		
	1649 8002 72	1	CABLE POWER	**(28/08/2017 - 20/08/2018)** ((((CAPPRM:AS1210 , CAPPRM:CE , CAPPRM:MHLW , CAPPRM:MOM) + MOVOL:400V , CAPPRM:CE + MOVOL:500V , CAPPRM:MHLW + MOVOL:200V) + FREQ:50HZ , (CAPPRM:ASME , CAPPRM:MHLW) + FREQ:60HZ + MOVOL:460V) + CAPPRE:IEC , (MOVOL:230V , MOVOL:460V , MOVOL:575V) + CAPPRE:ULCUL + CAPPRM:ASME + FREQ:60HZ) + COOL:AIR **(21/08/2018 - 10/12/2018)** ((((CAPPRM:AS1210 , CAPPRM:CE , CAPPRM:MHLW , CAPPRM:MOM) + MOVOL:400V , (CAPPRM:CE + MOVOL:500V , CAPPRM:MHLW + MOVOL:200V) + COOL:AIR) + FREQ:50HZ , (CAPPRM:ASME , CAPPRM:MHLW) + FREQ:60HZ + MOVOL:460V) + CAPPRE:IEC , ((MOVOL:230V , MOVOL:575V) + COOL:AIR , MOVOL:460V) + CAPPRE:ULCUL + CAPPRM:ASME + FREQ:60HZ) **(11/12/2018 - 11/12/2018)** ((((CAPPRM:AS1210 , CAPPRM:CE , CAPPRM:MHLW , CAPPRM:MOM) + MOVOL:400V , (CAPPRM:CE + MOVOL:500V , CAPPRM:MHLW + MOVOL:200V) + COOL:AIR) + FREQ:50HZ , (CAPPRM:ASME , CAPPRM:MHLW) + COOL:WATER + FREQ:60HZ + MOVOL:460V) + CAPPRE:IEC , ((MOVOL:230V , MOVOL:575V) + COOL:AIR , MOVOL:460V) + CAPPRE:ULCUL + CAPPRM:ASME + FREQ:60HZ)	
	Electrical legend:	Full feature (FF) Drain			

Legend:

CAPPRE:IEC - Component approval electrical:IEC
CAPPRM:ASME - Component approval mechanical:ASME
CAPPRM:MOM - Component approval mechanical:MOM
FREQ:50HZ - Frequency:50 Hz
MODEL:GA75VP_16 - Model:GA 75VSD+
MOVOL:400V - Supply voltage:400 V
MOVOL:575V - Supply voltage:575 V
CAPPRE:ULCUL - Component approval electrical:UL/cUL
CAPPRM:CE - Component approval mechanical:CE
COOL:AIR - Cooling:Air cooled
FREQ:60HZ - Frequency:60 Hz
MOVOL:200V - Supply voltage:200 V
MOVOL:460V - Supply voltage:460 V
CAPPRM:AS1210 - Component approval mechanical:AS1210
CAPPRM:MHLW - Component approval mechanical:MHLW
COOL:WATER - Cooling:Water cooled
IDRY:Y - Integrated dryer:Yes
MOVOL:230V - Supply voltage:230 V
MOVOL:500V - Supply voltage:500 V

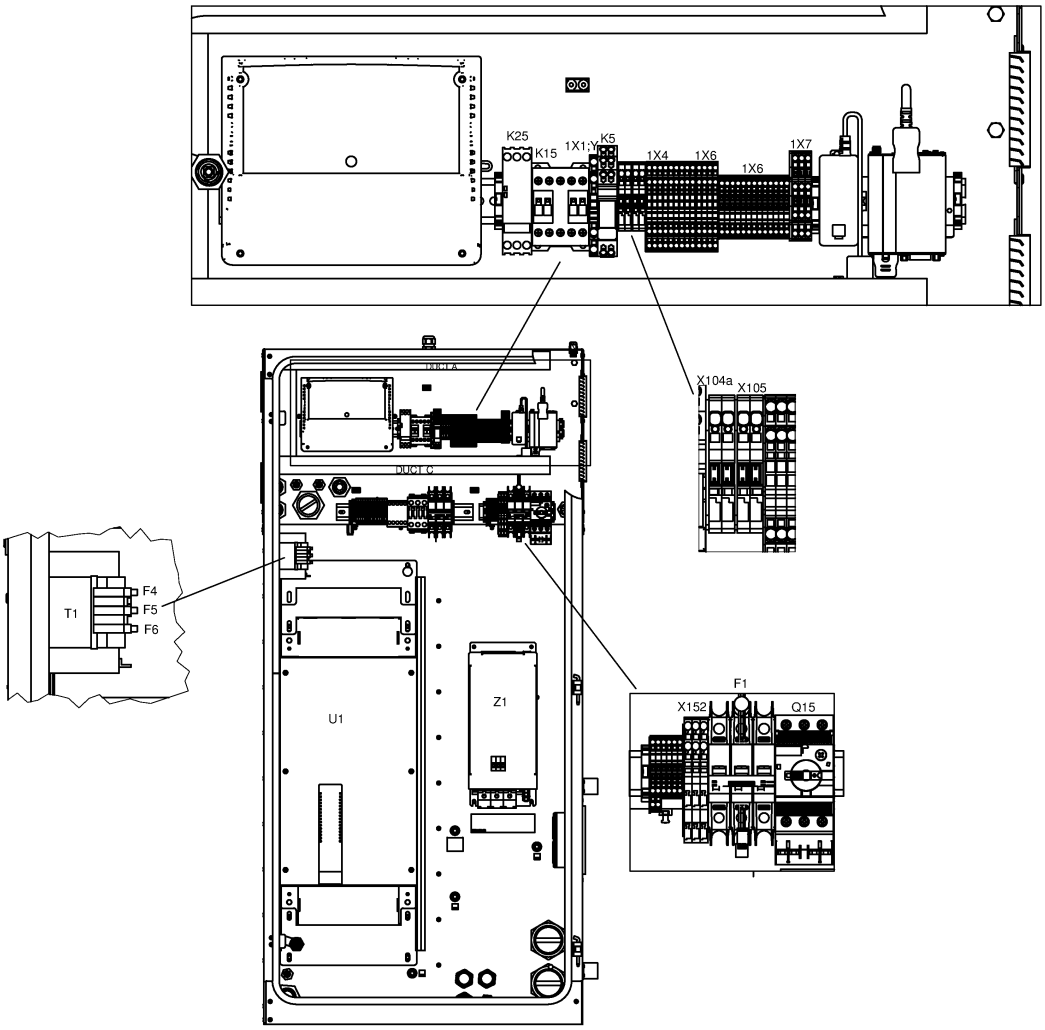
K25
K15
1X1:Y
K5
1X4
1X6
1X6
1X7
DUCT A
DUCT C
X104a
X105
T1
F4
F5
F6
U1
Z1
F1
X152
Q15

Ref	Part Number	Qty	Name	Validity	EL
	1649 8002 73	1	WIRE HARNESS	**(28/08/2017 - 20/08/2018)** ((((CAPPRM:AS1210 , CAPPRM:CE , CAPPRM:MHLW , CAPPRM:MOM) + MOVOL:400V , CAPPRM:CE + MOVOL:500V , CAPPRM:MHLW + MOVOL:200V) + FREQ:50HZ , (CAPPRM:ASME , CAPPRM:MHLW) + FREQ:60HZ + MOVOL:460V) + CAPPRE:IEC , (MOVOL:230V , MOVOL:460V , MOVOL:575V) + CAPPRE:ULCUL + CAPPRM:ASME + FREQ:60HZ) + COOL:AIR **(21/08/2018 - 10/12/2018)** ((((CAPPRM:AS1210 , CAPPRM:CE , CAPPRM:MHLW , CAPPRM:MOM) + MOVOL:400V , (CAPPRM:CE + MOVOL:500V , CAPPRM:MHLW + MOVOL:200V) + COOL:AIR) + FREQ:50HZ , (CAPPRM:ASME , CAPPRM:MHLW) + FREQ:60HZ + MOVOL:460V) + CAPPRE:IEC , ((MOVOL:230V , MOVOL:575V) + COOL:AIR , MOVOL:460V) + CAPPRE:ULCUL + CAPPRM:ASME + FREQ:60HZ) **(11/12/2018 - 11/12/2018)** ((((CAPPRM:AS1210 , CAPPRM:CE , CAPPRM:MHLW , CAPPRM:MOM) + MOVOL:400V , (CAPPRM:CE + MOVOL:500V , CAPPRM:MHLW + MOVOL:200V) + COOL:AIR) + FREQ:50HZ , (CAPPRM:ASME , CAPPRM:MHLW) + COOL:WATER + FREQ:60HZ + MOVOL:460V) + CAPPRE:IEC , ((MOVOL:230V , MOVOL:575V) + COOL:AIR , MOVOL:460V) + CAPPRE:ULCUL + CAPPRM:ASME + FREQ:60HZ)	
	Electrical legend:	Pack Drain + Air filter switch			
•	0698 5140 74	1	CABLE GLAND		
	1649 8002 75	1	WIRE HARNESS	**(28/08/2017 - 20/08/2018)** ((((CAPPRM:AS1210 , CAPPRM:CE , CAPPRM:MHLW , CAPPRM:MOM) + MOVOL:400V , CAPPRM:CE + MOVOL:500V , CAPPRM:MHLW + MOVOL:200V) + FREQ:50HZ , (CAPPRM:ASME , CAPPRM:MHLW) + FREQ:60HZ + MOVOL:460V) + CAPPRE:IEC , (MOVOL:230V , MOVOL:460V , MOVOL:575V) + CAPPRE:ULCUL + CAPPRM:ASME + FREQ:60HZ) + COOL:AIR **(21/08/2018 - 10/12/2018)** ((((CAPPRM:AS1210 , CAPPRM:CE , CAPPRM:MHLW , CAPPRM:MOM) + MOVOL:400V , (CAPPRM:CE + MOVOL:500V , CAPPRM:MHLW + MOVOL:200V) + COOL:AIR) + FREQ:50HZ , (CAPPRM:ASME , CAPPRM:MHLW) + FREQ:60HZ + MOVOL:460V) + CAPPRE:IEC , ((MOVOL:230V , MOVOL:575V) + COOL:AIR , MOVOL:460V) + CAPPRE:ULCUL + CAPPRM:ASME + FREQ:60HZ) **(11/12/2018 - 11/12/2018)** ((((CAPPRM:AS1210 , CAPPRM:CE , CAPPRM:MHLW , CAPPRM:MOM) + MOVOL:400V , (CAPPRM:CE + MOVOL:500V , CAPPRM:MHLW + MOVOL:200V) + COOL:AIR) + FREQ:50HZ , (CAPPRM:ASME , CAPPRM:MHLW) + COOL:WATER + FREQ:60HZ + MOVOL:460V) + CAPPRE:IEC , ((MOVOL:230V , MOVOL:575V) + COOL:AIR , MOVOL:460V) + CAPPRE:ULCUL + CAPPRM:ASME + FREQ:60HZ)	
	Electrical legend:	Relative Humidity sensor			
•	~~1089 9320 09~~	1	RH SENSOR		
	Substituted by:	1089 9320 10 - TEMP. SENSOR (quantity: 1)			
•	0698 5140 75	1	CABLE GLAND		

Legend:

CAPPRE:IEC - Component approval electrical:IEC
CAPPRE:ULCUL - Component approval electrical:UL/cUL
CAPPRM:AS1210 - Component approval mechanical:AS1210
CAPPRM:ASME - Component approval mechanical:ASME
CAPPRM:CE - Component approval mechanical:CE
CAPPRM:MHLW - Component approval mechanical:MHLW
CAPPRM:MOM - Component approval mechanical:MOM
COOL:AIR - Cooling:Air cooled
COOL:WATER - Cooling:Water cooled
FREQ:50HZ - Frequency:50 Hz
FREQ:60HZ - Frequency:60 Hz
IDRY:Y - Integrated dryer:Yes
MODEL:GA75VP_16 - Model:GA 75VSD+
MOVOL:200V - Supply voltage:200 V
MOVOL:230V - Supply voltage:230 V
MOVOL:400V - Supply voltage:400 V
MOVOL:460V - Supply voltage:460 V
MOVOL:500V - Supply voltage:500 V
MOVOL:575V - Supply voltage:575 V

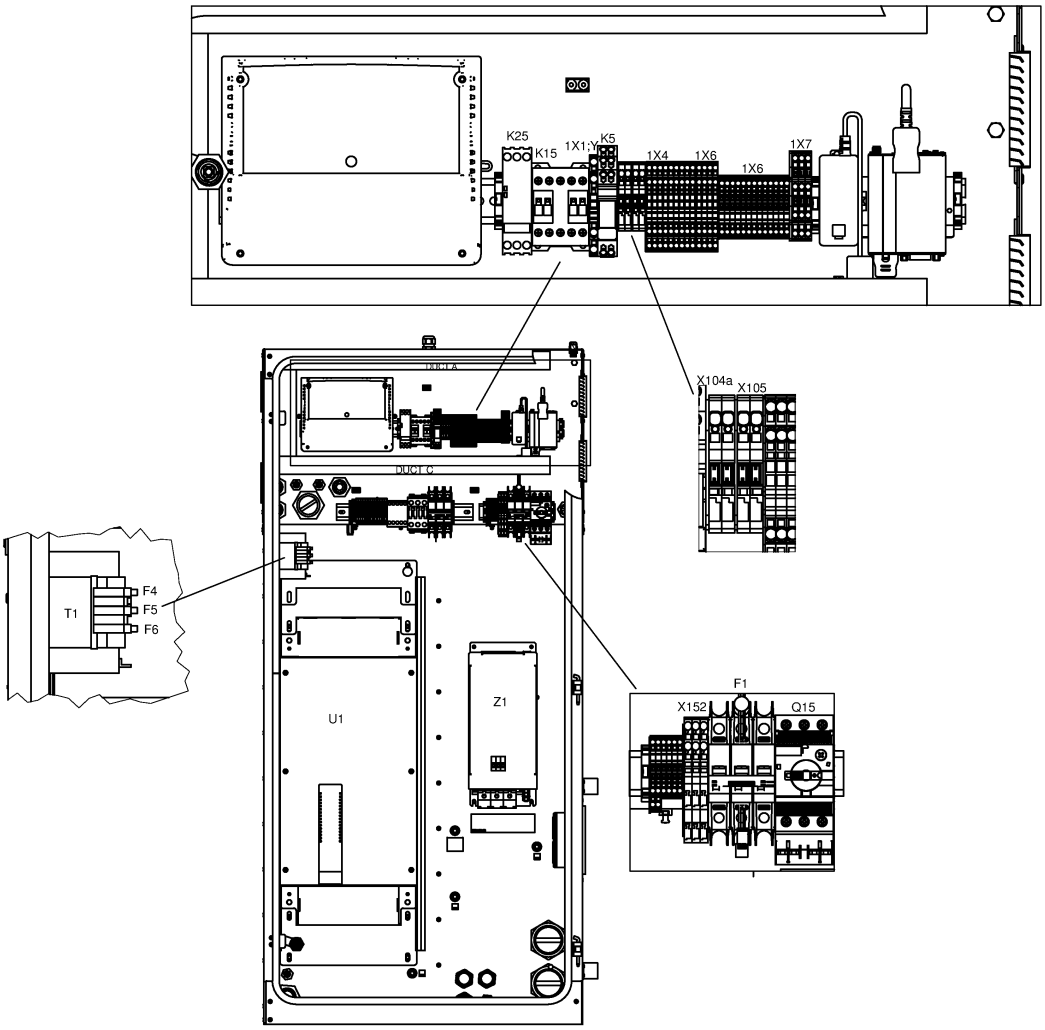
K25
K15
1X1:Y
K5
1X4
1X6
1X6
1X7
DUCT A
DUCT C
X104a
X105
T1
F4
F5
F6
U1
Z1
F1
X152
Q15

21.8 - Cubicle components GA 75L VSD+ - ((200V-400V-500V/50Hz, 460V/60Hz) - IEC, (230V-460V-575V/60Hz - UL-cUL)) - Full-Feature (28/08/2017 - 11/12/2018)

(((MOVOL:200V , MOVOL:400V , MOVOL:500V) + FREQ:50HZ , FREQ:60HZ + MOVOL:460V) + CAPPRE:IEC , (MOVOL:230V , MOVOL:460V , MOVOL:575V) + CAPPRE:ULCUL + FREQ:60HZ) + IDRY:Y + MODEL:GA75VP_16

Ref	Part Number	Qty	Name	Validity	EL
	1649 8001 45	3	MOTOR CABLE	**(28/08/2017 - 20/08/2018)** ((((CAPPRM:AS1210 , CAPPRM:CE , CAPPRM:MHLW , CAPPRM:MOM) + MOVOL:400V , CAPPRM:CE + MOVOL:500V , CAPPRM:MHLW + MOVOL:200V) + FREQ:50HZ , (CAPPRM:ASME , CAPPRM:MHLW) + FREQ:60HZ + MOVOL:460V) + CAPPRE:IEC , (MOVOL:230V , MOVOL:460V , MOVOL:575V) + CAPPRE:ULCUL + CAPPRM:ASME + FREQ:60HZ) + COOL:AIR **(21/08/2018 - 10/12/2018)** ((((CAPPRM:AS1210 , CAPPRM:CE , CAPPRM:MHLW , CAPPRM:MOM) + MOVOL:400V , (CAPPRM:CE + MOVOL:500V , CAPPRM:MHLW + MOVOL:200V) + COOL:AIR) + FREQ:50HZ , (CAPPRM:ASME , CAPPRM:MHLW) + FREQ:60HZ + MOVOL:460V) + CAPPRE:IEC , ((MOVOL:230V , MOVOL:575V) + COOL:AIR , MOVOL:460V) + CAPPRE:ULCUL + CAPPRM:ASME + FREQ:60HZ) **(11/12/2018 - 11/12/2018)** ((((CAPPRM:AS1210 , CAPPRM:CE , CAPPRM:MHLW , CAPPRM:MOM) + MOVOL:400V , (CAPPRM:CE + MOVOL:500V , CAPPRM:MHLW + MOVOL:200V) + COOL:AIR) + FREQ:50HZ , (CAPPRM:ASME , CAPPRM:MHLW) + COOL:WATER + FREQ:60HZ + MOVOL:460V) + CAPPRE:IEC , ((MOVOL:230V , MOVOL:575V) + COOL:AIR , MOVOL:460V) + CAPPRE:ULCUL + CAPPRM:ASME + FREQ:60HZ)	-
	1649 8001 48	1	MOTOR CABLE	**(28/08/2017 - 20/08/2018)** ((((CAPPRM:AS1210 , CAPPRM:CE , CAPPRM:MHLW , CAPPRM:MOM) + MOVOL:400V , CAPPRM:CE + MOVOL:500V , CAPPRM:MHLW + MOVOL:200V) + FREQ:50HZ , (CAPPRM:ASME , CAPPRM:MHLW) + FREQ:60HZ + MOVOL:460V) + CAPPRE:IEC , (MOVOL:230V , MOVOL:460V , MOVOL:575V) + CAPPRE:ULCUL + CAPPRM:ASME + FREQ:60HZ) + COOL:AIR **(21/08/2018 - 10/12/2018)** ((((CAPPRM:AS1210 , CAPPRM:CE , CAPPRM:MHLW , CAPPRM:MOM) + MOVOL:400V , (CAPPRM:CE + MOVOL:500V , CAPPRM:MHLW + MOVOL:200V) + COOL:AIR) + FREQ:50HZ , (CAPPRM:ASME , CAPPRM:MHLW) + FREQ:60HZ + MOVOL:460V) + CAPPRE:IEC , ((MOVOL:230V , MOVOL:575V) + COOL:AIR , MOVOL:460V) + CAPPRE:ULCUL + CAPPRM:ASME + FREQ:60HZ) **(11/12/2018 - 11/12/2018)** ((((CAPPRM:AS1210 , CAPPRM:CE , CAPPRM:MHLW , CAPPRM:MOM) + MOVOL:400V , (CAPPRM:CE + MOVOL:500V , CAPPRM:MHLW + MOVOL:200V) + COOL:AIR) + FREQ:50HZ , (CAPPRM:ASME , CAPPRM:MHLW) + COOL:WATER + FREQ:60HZ + MOVOL:460V) + CAPPRE:IEC , ((MOVOL:230V , MOVOL:575V) + COOL:AIR , MOVOL:460V) + CAPPRE:ULCUL + CAPPRM:ASME + FREQ:60HZ)	
		1	DATA LABEL	**(28/08/2017 - 01/02/2018)** ((((CAPPRM:AS1210 , CAPPRM:CE , CAPPRM:MHLW , CAPPRM:MOM) + MOVOL:400V , CAPPRM:CE + MOVOL:500V , CAPPRM:MHLW + MOVOL:200V) + FREQ:50HZ , (CAPPRM:ASME , CAPPRM:MHLW) + FREQ:60HZ + MOVOL:460V) + CAPPRE:IEC , (MOVOL:230V , MOVOL:460V , MOVOL:575V) + CAPPRE:ULCUL + CAPPRM:ASME + FREQ:60HZ) + COOL:AIR	

Legend:

CAPPRE:IEC - Component approval electrical:IEC
CAPPRE:ULCUL - Component approval electrical:UL/cUL
CAPPRM:AS1210 - Component approval mechanical:AS1210
CAPPRM:ASME - Component approval mechanical:ASME
CAPPRM:CE - Component approval mechanical:CE
CAPPRM:MHLW - Component approval mechanical:MHLW
CAPPRM:MOM - Component approval mechanical:MOM
COOL:AIR - Cooling:Air cooled
COOL:WATER - Cooling:Water cooled
FREQ:50HZ - Frequency:50 Hz
FREQ:60HZ - Frequency:60 Hz
IDRY:Y - Integrated dryer:Yes
MODEL:GA75VP_16 - Model:GA 75VSD+
MOVOL:200V - Supply voltage:200 V
MOVOL:230V - Supply voltage:230 V
MOVOL:400V - Supply voltage:400 V
MOVOL:460V - Supply voltage:460 V
MOVOL:500V - Supply voltage:500 V
MOVOL:575V - Supply voltage:575 V

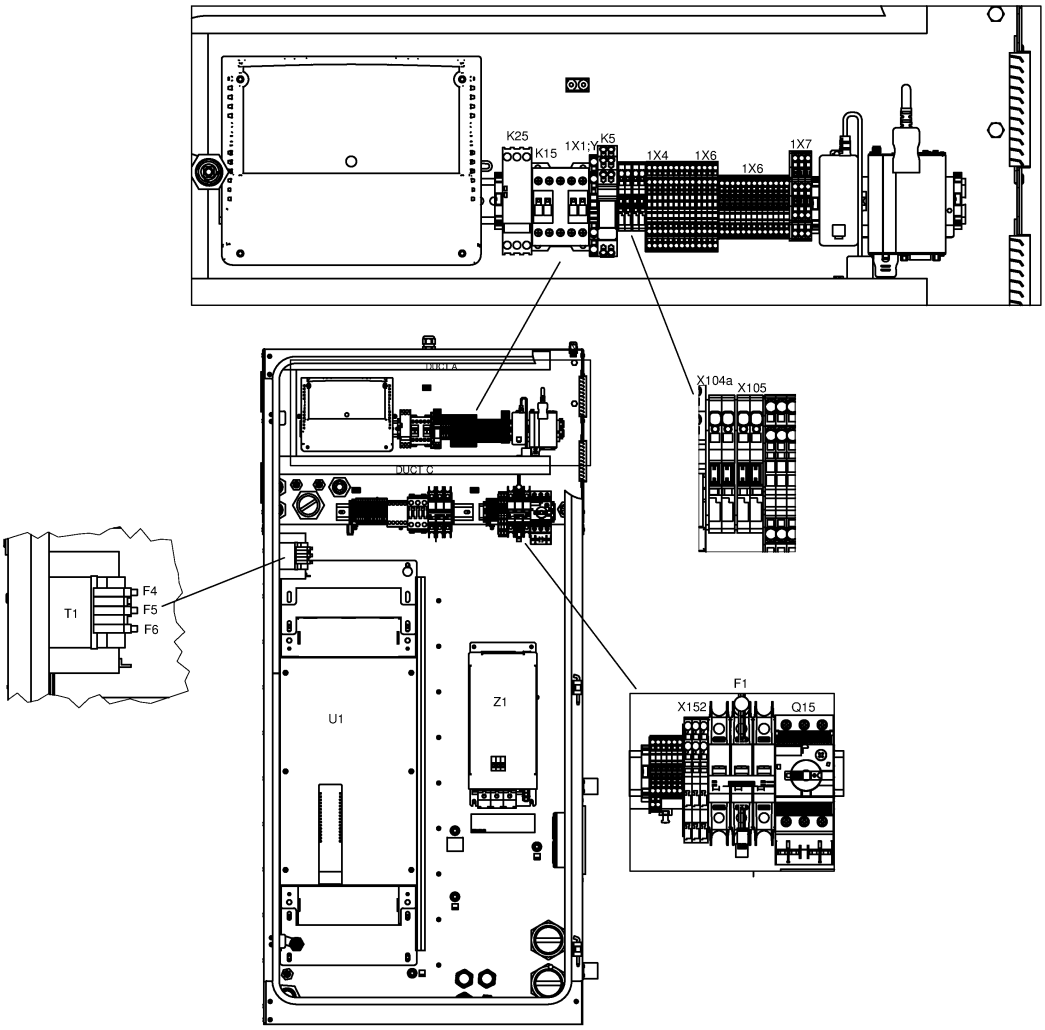
K25
K15
1X1:Y
K5
1X4
1X6
1X6
1X7
DUCT A
DUCT C
X104a
X105
T1
F4
F5
F6
U1
Z1
F1
X152
Q15

21.8 - Cubicle components GA 75L VSD+ - ((200V-400V-500V/50Hz, 460V/60Hz) - IEC, (230V-460V-575V/60Hz - UL-cUL)) - Full-Feature (28/08/2017 - 11/12/2018)

(((MOVOL:200V , MOVOL:400V , MOVOL:500V) + FREQ:50HZ , FREQ:60HZ + MOVOL:460V) + CAPPRE:IEC , (MOVOL:230V , MOVOL:460V , MOVOL:575V) + CAPPRE:ULCUL + FREQ:60HZ) + IDRY:Y + MODEL:GA75VP_16

Ref	Part Number	Qty	Name	Validity	EL
		1	DATA LABEL	**(02/02/2018 - 20/08/2018)** ((((CAPPRM:AS1210 , CAPPRM:CE , CAPPRM:MHLW , CAPPRM:MOM) + MOVOL:400V , CAPPRM:CE + MOVOL:500V , CAPPRM:MHLW + MOVOL:200V) + FREQ:50HZ , (CAPPRM:ASME , CAPPRM:MHLW) + FREQ:60HZ + MOVOL:460V) + CAPPRE:IEC , (MOVOL:230V , MOVOL:460V , MOVOL:575V) + CAPPRE:ULCUL + CAPPRM:ASME + FREQ:60HZ) + COOL:AIR **(21/08/2018 - 10/12/2018)** ((((CAPPRM:AS1210 , CAPPRM:CE , CAPPRM:MHLW , CAPPRM:MOM) + MOVOL:400V , (CAPPRM:CE + MOVOL:500V , CAPPRM:MHLW + MOVOL:200V) + COOL:AIR) + FREQ:50HZ , (CAPPRM:ASME , CAPPRM:MHLW) + FREQ:60HZ + MOVOL:460V) + CAPPRE:IEC , ((MOVOL:230V , MOVOL:575V) + COOL:AIR , MOVOL:460V) + CAPPRE:ULCUL + CAPPRM:ASME + FREQ:60HZ) **(11/12/2018 - 11/12/2018)** ((((CAPPRM:AS1210 , CAPPRM:CE , CAPPRM:MHLW , CAPPRM:MOM) + MOVOL:400V , (CAPPRM:CE + MOVOL:500V , CAPPRM:MHLW + MOVOL:200V) + COOL:AIR) + FREQ:50HZ , (CAPPRM:ASME , CAPPRM:MHLW) + COOL:WATER + FREQ:60HZ + MOVOL:460V) + CAPPRE:IEC , ((MOVOL:230V , MOVOL:575V) + COOL:AIR , MOVOL:460V) + CAPPRE:ULCUL + CAPPRM:ASME + FREQ:60HZ)	-
		1	WARNING LABEL	**(28/08/2017 - 20/08/2018)** ((((CAPPRM:AS1210 , CAPPRM:CE , CAPPRM:MHLW , CAPPRM:MOM) + MOVOL:400V , CAPPRM:CE + MOVOL:500V , CAPPRM:MHLW + MOVOL:200V) + FREQ:50HZ , (CAPPRM:ASME , CAPPRM:MHLW) + FREQ:60HZ + MOVOL:460V) + CAPPRE:IEC , (MOVOL:230V , MOVOL:460V , MOVOL:575V) + CAPPRE:ULCUL + CAPPRM:ASME + FREQ:60HZ) + COOL:AIR **(21/08/2018 - 10/12/2018)** ((((CAPPRM:AS1210 , CAPPRM:CE , CAPPRM:MHLW , CAPPRM:MOM) + MOVOL:400V , (CAPPRM:CE + MOVOL:500V , CAPPRM:MHLW + MOVOL:200V) + COOL:AIR) + FREQ:50HZ , (CAPPRM:ASME , CAPPRM:MHLW) + FREQ:60HZ + MOVOL:460V) + CAPPRE:IEC , ((MOVOL:230V , MOVOL:575V) + COOL:AIR , MOVOL:460V) + CAPPRE:ULCUL + CAPPRM:ASME + FREQ:60HZ) **(11/12/2018 - 11/12/2018)** ((((CAPPRM:AS1210 , CAPPRM:CE , CAPPRM:MHLW , CAPPRM:MOM) + MOVOL:400V , (CAPPRM:CE + MOVOL:500V , CAPPRM:MHLW + MOVOL:200V) + COOL:AIR) + FREQ:50HZ , (CAPPRM:ASME , CAPPRM:MHLW) + COOL:WATER + FREQ:60HZ + MOVOL:460V) + CAPPRE:IEC , ((MOVOL:230V , MOVOL:575V) + COOL:AIR , MOVOL:460V) + CAPPRE:ULCUL + CAPPRM:ASME + FREQ:60HZ)	

Legend:

CAPPRE:IEC - Component approval electrical:IEC
CAPPRM:ASME - Component approval mechanical:ASME
CAPPRM:MOM - Component approval mechanical:MOM
FREQ:50HZ - Frequency:50 Hz
MODEL:GA75VP_16 - Model:GA 75VSD+
MOVOL:400V - Supply voltage:400 V
MOVOL:575V - Supply voltage:575 V
CAPPRE:ULCUL - Component approval electrical:UL/cUL
CAPPRM:CE - Component approval mechanical:CE
COOL:AIR - Cooling:Air cooled
FREQ:60HZ - Frequency:60 Hz
MOVOL:200V - Supply voltage:200 V
MOVOL:460V - Supply voltage:460 V
CAPPRM:AS1210 - Component approval mechanical:AS1210
CAPPRM:MHLW - Component approval mechanical:MHLW
COOL:WATER - Cooling:Water cooled
IDRY:Y - Integrated dryer:Yes
MOVOL:230V - Supply voltage:230 V
MOVOL:500V - Supply voltage:500 V

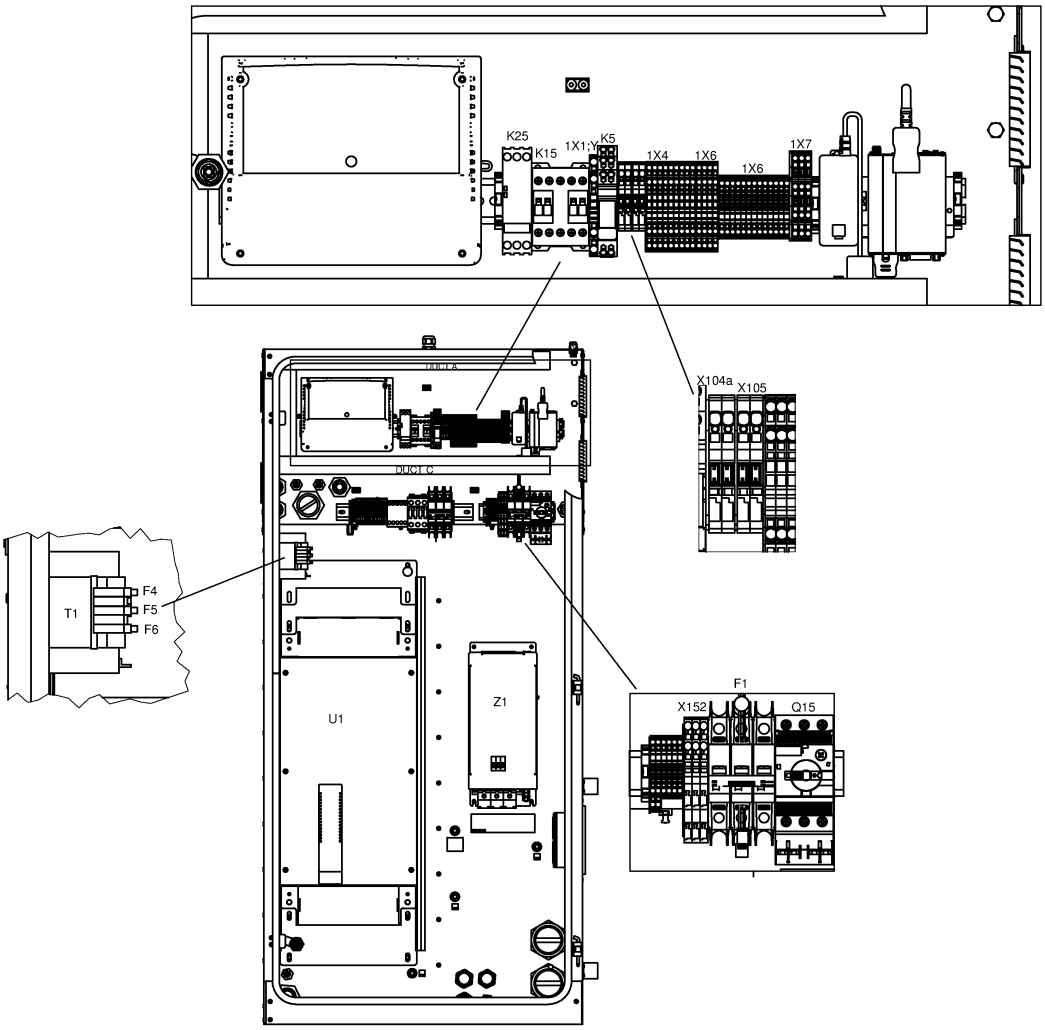
K25
K15
1X1:Y
K5
1X4
1X6
1X6
1X7
DUCT A
DUCT C
X104a
X105
T1
F4
F5
F6
U1
Z1
F1
X152
Q15

21.8 - Cubicle components GA 75L VSD+ - ((200V-400V-500V/50Hz, 460V/60Hz) - IEC, (230V-460V-575V/60Hz - UL-cUL)) - Full-Feature (28/08/2017 - 11/12/2018)

(((MOVOL:200V , MOVOL:400V , MOVOL:500V) + FREQ:50HZ , FREQ:60HZ + MOVOL:460V) + CAPPRE:IEC , (MOVOL:230V , MOVOL:460V , MOVOL:575V) + CAPPRE:ULCUL + FREQ:60HZ) + IDRY:Y + MODEL:GA75VP_16

Ref	Part Number	Qty	Name	Validity	EL
	1900 5350 15	1	INVERTER	**(28/08/2017 - 20/08/2018)** ((((CAPPRM:AS1210 , CAPPRM:CE , CAPPRM:MHLW , CAPPRM:MOM) + MOVOL:400V , CAPPRM:CE + MOVOL:500V , CAPPRM:MHLW + MOVOL:200V) + FREQ:50HZ , (CAPPRM:ASME , CAPPRM:MHLW) + FREQ:60HZ + MOVOL:460V) + CAPPRE:IEC , (MOVOL:230V , MOVOL:460V , MOVOL:575V) + CAPPRE:ULCUL + CAPPRM:ASME + FREQ:60HZ) + COOL:AIR **(21/08/2018 - 10/12/2018)** ((((CAPPRM:AS1210 , CAPPRM:CE , CAPPRM:MHLW , CAPPRM:MOM) + MOVOL:400V , (CAPPRM:CE + MOVOL:500V , CAPPRM:MHLW + MOVOL:200V) + COOL:AIR) + FREQ:50HZ , (CAPPRM:ASME , CAPPRM:MHLW) + FREQ:60HZ + MOVOL:460V) + CAPPRE:IEC , ((MOVOL:230V , MOVOL:575V) + COOL:AIR , MOVOL:460V) + CAPPRE:ULCUL + CAPPRM:ASME + FREQ:60HZ) **(11/12/2018 - 11/12/2018)** ((((CAPPRM:AS1210 , CAPPRM:CE , CAPPRM:MHLW , CAPPRM:MOM) + MOVOL:400V , (CAPPRM:CE + MOVOL:500V , CAPPRM:MHLW + MOVOL:200V) + COOL:AIR) + FREQ:50HZ , (CAPPRM:ASME , CAPPRM:MHLW) + COOL:WATER + FREQ:60HZ + MOVOL:460V) + CAPPRE:IEC , ((MOVOL:230V , MOVOL:575V) + COOL:AIR , MOVOL:460V) + CAPPRE:ULCUL + CAPPRM:ASME + FREQ:60HZ)	U1
	1631 2079 00	1	NANOPERMRING	**(28/08/2017 - 20/08/2018)** ((((CAPPRM:AS1210 , CAPPRM:CE , CAPPRM:MHLW , CAPPRM:MOM) + MOVOL:400V , CAPPRM:CE + MOVOL:500V , CAPPRM:MHLW + MOVOL:200V) + FREQ:50HZ , (CAPPRM:ASME , CAPPRM:MHLW) + FREQ:60HZ + MOVOL:460V) + CAPPRE:IEC , (MOVOL:230V , MOVOL:460V , MOVOL:575V) + CAPPRE:ULCUL + CAPPRM:ASME + FREQ:60HZ) + COOL:AIR **(21/08/2018 - 10/12/2018)** ((((CAPPRM:AS1210 , CAPPRM:CE , CAPPRM:MHLW , CAPPRM:MOM) + MOVOL:400V , (CAPPRM:CE + MOVOL:500V , CAPPRM:MHLW + MOVOL:200V) + COOL:AIR) + FREQ:50HZ , (CAPPRM:ASME , CAPPRM:MHLW) + FREQ:60HZ + MOVOL:460V) + CAPPRE:IEC , ((MOVOL:230V , MOVOL:575V) + COOL:AIR , MOVOL:460V) + CAPPRE:ULCUL + CAPPRM:ASME + FREQ:60HZ) **(11/12/2018 - 11/12/2018)** ((((CAPPRM:AS1210 , CAPPRM:CE , CAPPRM:MHLW , CAPPRM:MOM) + MOVOL:400V , (CAPPRM:CE + MOVOL:500V , CAPPRM:MHLW + MOVOL:200V) + COOL:AIR) + FREQ:50HZ , (CAPPRM:ASME , CAPPRM:MHLW) + COOL:WATER + FREQ:60HZ + MOVOL:460V) + CAPPRE:IEC , ((MOVOL:230V , MOVOL:575V) + COOL:AIR , MOVOL:460V) + CAPPRE:ULCUL + CAPPRM:ASME + FREQ:60HZ)	-

Legend:

CAPPRE:IEC - Component approval electrical:IEC
CAPPRM:ASME - Component approval mechanical:ASME
CAPPRM:MOM - Component approval mechanical:MOM
FREQ:50HZ - Frequency:50 Hz
MODEL:GA75VP_16 - Model:GA 75VSD+
MOVOL:400V - Supply voltage:400 V
MOVOL:575V - Supply voltage:575 V
CAPPRE:ULCUL - Component approval electrical:UL/cUL
CAPPRM:CE - Component approval mechanical:CE
COOL:AIR - Cooling:Air cooled
FREQ:60HZ - Frequency:60 Hz
MOVOL:200V - Supply voltage:200 V
MOVOL:460V - Supply voltage:460 V
CAPPRM:AS1210 - Component approval mechanical:AS1210
CAPPRM:MHLW - Component approval mechanical:MHLW
COOL:WATER - Cooling:Water cooled
IDRY:Y - Integrated dryer:Yes
MOVOL:230V - Supply voltage:230 V
MOVOL:500V - Supply voltage:500 V

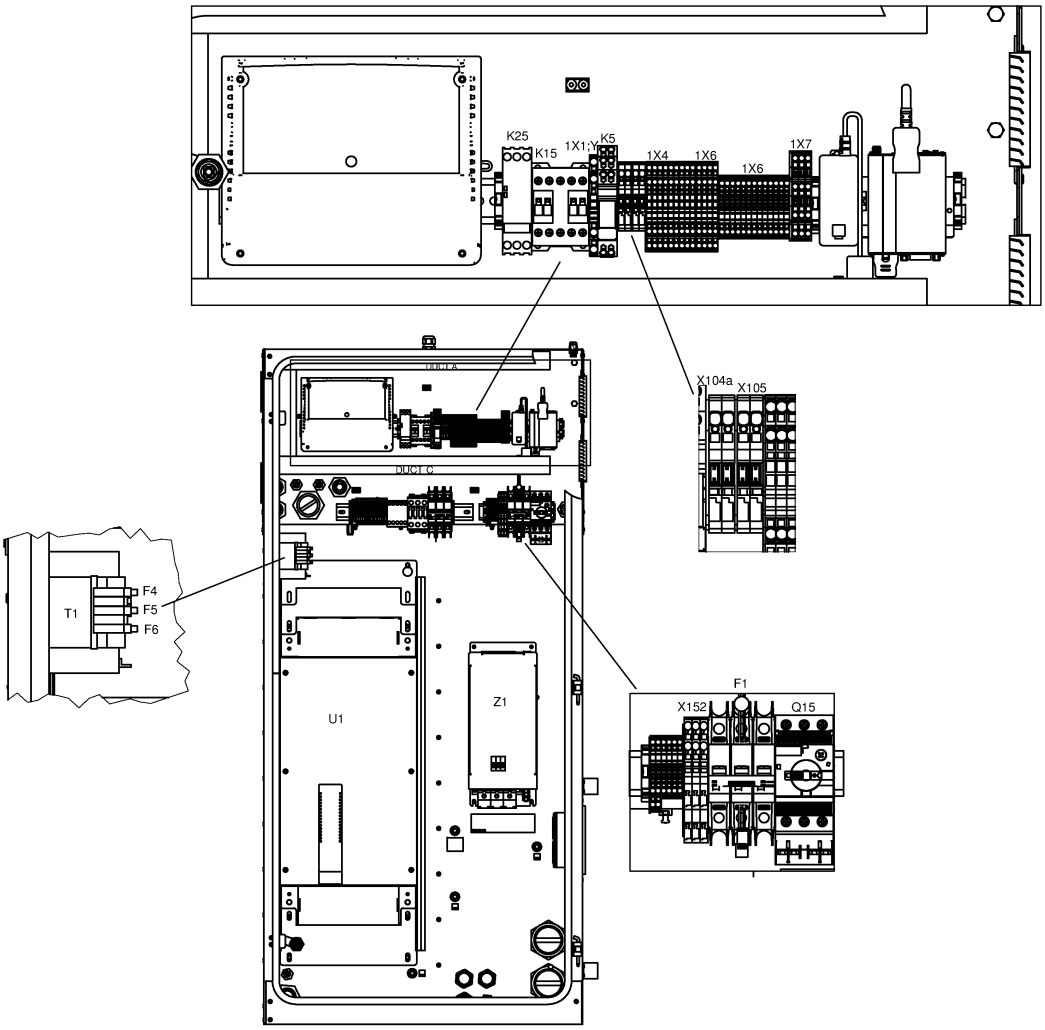
K25
K15
1X1:Y
K5
1X4
1X6
1X6
1X7
DUCT A
DUCT C
X104a
X105
T1
F4
F5
F6
U1
Z1
F1
X152
Q15

21.8 - Cubicle components GA 75L VSD+ - ((200V-400V-500V/50Hz, 460V/60Hz) - IEC, (230V-460V-575V/60Hz - UL-cUL)) - Full-Feature (28/08/2017 - 11/12/2018)

(((MOVOL:200V , MOVOL:400V , MOVOL:500V) + FREQ:50HZ , FREQ:60HZ + MOVOL:460V) + CAPPRE:IEC , (MOVOL:230V , MOVOL:460V , MOVOL:575V) + CAPPRE:ULCUL + FREQ:60HZ) + IDRY:Y + MODEL:GA75VP_16

Ref	Part Number	Qty	Name	Validity	EL
	0697 9811 17	2	PLUG	**(28/08/2017 - 20/08/2018)** ((((CAPPRM:AS1210 , CAPPRM:CE , CAPPRM:MHLW , CAPPRM:MOM) + MOVOL:400V , CAPPRM:CE + MOVOL:500V , CAPPRM:MHLW + MOVOL:200V) + FREQ:50HZ , (CAPPRM:ASME , CAPPRM:MHLW) + FREQ:60HZ + MOVOL:460V) + CAPPRE:IEC , (MOVOL:230V , MOVOL:460V , MOVOL:575V) + CAPPRE:ULCUL + CAPPRM:ASME + FREQ:60HZ) + COOL:AIR **(21/08/2018 - 10/12/2018)** ((((CAPPRM:AS1210 , CAPPRM:CE , CAPPRM:MHLW , CAPPRM:MOM) + MOVOL:400V , (CAPPRM:CE + MOVOL:500V , CAPPRM:MHLW + MOVOL:200V) + COOL:AIR) + FREQ:50HZ , (CAPPRM:ASME , CAPPRM:MHLW) + FREQ:60HZ + MOVOL:460V) + CAPPRE:IEC , ((MOVOL:230V , MOVOL:575V) + COOL:AIR , MOVOL:460V) + CAPPRE:ULCUL + CAPPRM:ASME + FREQ:60HZ) **(11/12/2018 - 11/12/2018)** ((((CAPPRM:AS1210 , CAPPRM:CE , CAPPRM:MHLW , CAPPRM:MOM) + MOVOL:400V , (CAPPRM:CE + MOVOL:500V , CAPPRM:MHLW + MOVOL:200V) + COOL:AIR) + FREQ:50HZ , (CAPPRM:ASME , CAPPRM:MHLW) + COOL:WATER + FREQ:60HZ + MOVOL:460V) + CAPPRE:IEC , ((MOVOL:230V , MOVOL:575V) + COOL:AIR , MOVOL:460V) + CAPPRE:ULCUL + CAPPRM:ASME + FREQ:60HZ)	
	Electrical legend:	Plug for transfo supply			
	0989 3700 48	2	NUT	**(28/08/2017 - 20/08/2018)** ((((CAPPRM:AS1210 , CAPPRM:CE , CAPPRM:MHLW , CAPPRM:MOM) + MOVOL:400V , CAPPRM:CE + MOVOL:500V , CAPPRM:MHLW + MOVOL:200V) + FREQ:50HZ , (CAPPRM:ASME , CAPPRM:MHLW) + FREQ:60HZ + MOVOL:460V) + CAPPRE:IEC , (MOVOL:230V , MOVOL:460V , MOVOL:575V) + CAPPRE:ULCUL + CAPPRM:ASME + FREQ:60HZ) + COOL:AIR **(21/08/2018 - 10/12/2018)** ((((CAPPRM:AS1210 , CAPPRM:CE , CAPPRM:MHLW , CAPPRM:MOM) + MOVOL:400V , (CAPPRM:CE + MOVOL:500V , CAPPRM:MHLW + MOVOL:200V) + COOL:AIR) + FREQ:50HZ , (CAPPRM:ASME , CAPPRM:MHLW) + FREQ:60HZ + MOVOL:460V) + CAPPRE:IEC , ((MOVOL:230V , MOVOL:575V) + COOL:AIR , MOVOL:460V) + CAPPRE:ULCUL + CAPPRM:ASME + FREQ:60HZ) **(11/12/2018 - 11/12/2018)** ((((CAPPRM:AS1210 , CAPPRM:CE , CAPPRM:MHLW , CAPPRM:MOM) + MOVOL:400V , (CAPPRM:CE + MOVOL:500V , CAPPRM:MHLW + MOVOL:200V) + COOL:AIR) + FREQ:50HZ , (CAPPRM:ASME , CAPPRM:MHLW) + COOL:WATER + FREQ:60HZ + MOVOL:460V) + CAPPRE:IEC , ((MOVOL:230V , MOVOL:575V) + COOL:AIR , MOVOL:460V) + CAPPRE:ULCUL + CAPPRM:ASME + FREQ:60HZ)	
	Electrical legend:	Nut for transfo supply			

Legend:

CAPPRE:IEC - Component approval electrical:IEC
CAPPRM:ASME - Component approval mechanical:ASME
CAPPRM:MOM - Component approval mechanical:MOM
FREQ:50HZ - Frequency:50 Hz
MODEL:GA75VP_16 - Model:GA 75VSD+
MOVOL:400V - Supply voltage:400 V
MOVOL:575V - Supply voltage:575 V
CAPPRE:ULCUL - Component approval electrical:UL/cUL
CAPPRM:CE - Component approval mechanical:CE
COOL:AIR - Cooling:Air cooled
FREQ:60HZ - Frequency:60 Hz
MOVOL:200V - Supply voltage:200 V
MOVOL:460V - Supply voltage:460 V
CAPPRM:AS1210 - Component approval mechanical:AS1210
CAPPRM:MHLW - Component approval mechanical:MHLW
COOL:WATER - Cooling:Water cooled
IDRY:Y - Integrated dryer:Yes
MOVOL:230V - Supply voltage:230 V
MOVOL:500V - Supply voltage:500 V

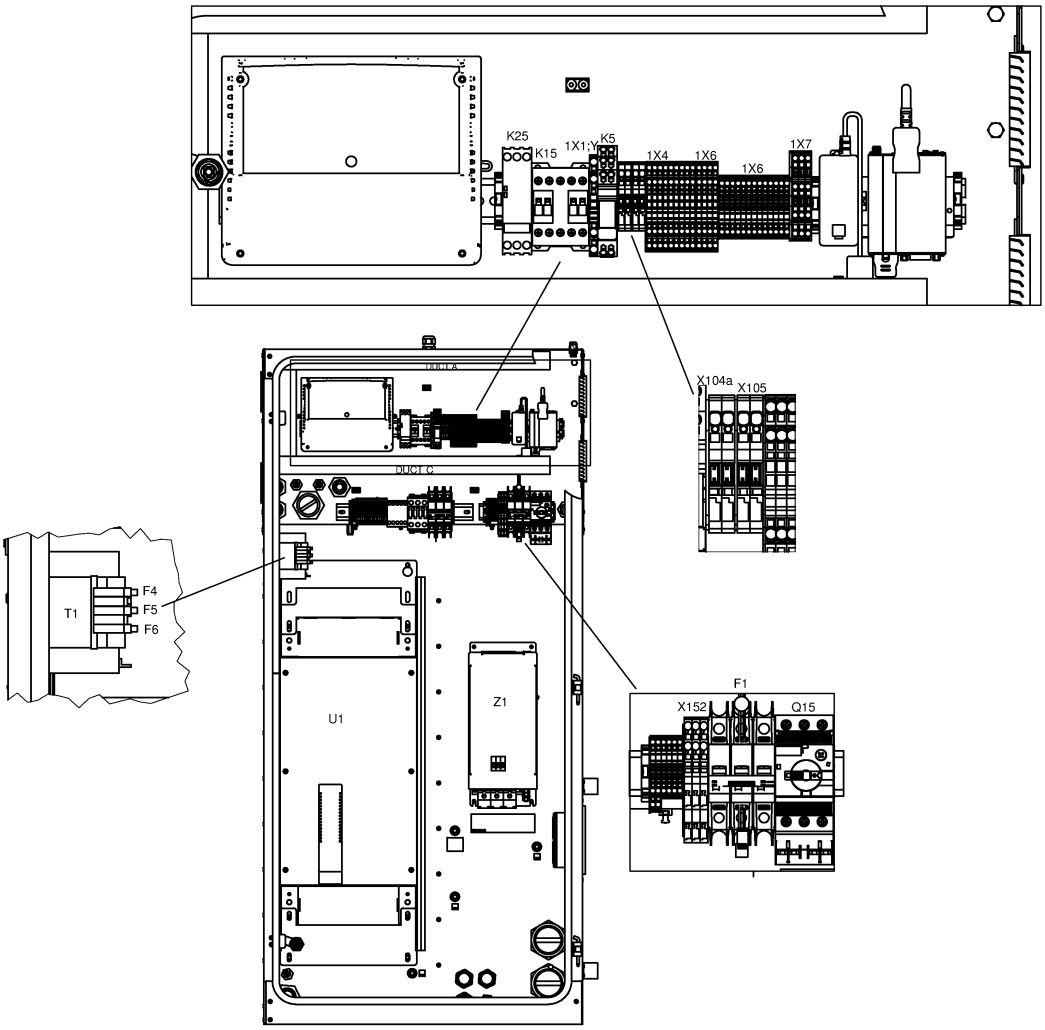
K25
K15
1X1:Y
K5
1X4
1X6
1X6
1X7
DUCT A
DUCT C
X104a
X105
T1
F4
F5
F6
U1
Z1
F1
X152
Q15

21.8 - Cubicle components GA 75L VSD+ - ((200V-400V-500V/50Hz, 460V/60Hz) - IEC, (230V-460V-575V/60Hz - UL-cUL)) - Full-Feature (28/08/2017 - 11/12/2018)

(((MOVOL:200V , MOVOL:400V , MOVOL:500V) + FREQ:50HZ , FREQ:60HZ + MOVOL:460V) + CAPPRE:IEC , (MOVOL:230V , MOVOL:460V , MOVOL:575V) + CAPPRE:ULCUL + FREQ:60HZ) + IDRY:Y + MODEL:GA75VP_16

Ref	Part Number	Qty	Name	Validity	EL
	0698 5140 72	1	CABLE GLAND	**(28/08/2017 - 20/08/2018)** ((((CAPPRM:AS1210 , CAPPRM:CE , CAPPRM:MHLW , CAPPRM:MOM) + MOVOL:400V , CAPPRM:CE + MOVOL:500V , CAPPRM:MHLW + MOVOL:200V) + FREQ:50HZ , (CAPPRM:ASME , CAPPRM:MHLW) + FREQ:60HZ + MOVOL:460V) + CAPPRE:IEC , (MOVOL:230V , MOVOL:460V , MOVOL:575V) + CAPPRE:ULCUL + CAPPRM:ASME + FREQ:60HZ) + COOL:AIR **(21/08/2018 - 10/12/2018)** ((((CAPPRM:AS1210 , CAPPRM:CE , CAPPRM:MHLW , CAPPRM:MOM) + MOVOL:400V , (CAPPRM:CE + MOVOL:500V , CAPPRM:MHLW + MOVOL:200V) + COOL:AIR) + FREQ:50HZ , (CAPPRM:ASME , CAPPRM:MHLW) + FREQ:60HZ + MOVOL:460V) + CAPPRE:IEC , ((MOVOL:230V , MOVOL:575V) + COOL:AIR , MOVOL:460V) + CAPPRE:ULCUL + CAPPRM:ASME + FREQ:60HZ) **(11/12/2018 - 11/12/2018)** ((((CAPPRM:AS1210 , CAPPRM:CE , CAPPRM:MHLW , CAPPRM:MOM) + MOVOL:400V , (CAPPRM:CE + MOVOL:500V , CAPPRM:MHLW + MOVOL:200V) + COOL:AIR) + FREQ:50HZ , (CAPPRM:ASME , CAPPRM:MHLW) + COOL:WATER + FREQ:60HZ + MOVOL:460V) + CAPPRE:IEC , ((MOVOL:230V , MOVOL:575V) + COOL:AIR , MOVOL:460V) + CAPPRE:ULCUL + CAPPRM:ASME + FREQ:60HZ)	Fan
	0698 5140 71	1	CABLE GLAND	**(28/08/2017 - 20/08/2018)** ((((CAPPRM:AS1210 , CAPPRM:CE , CAPPRM:MHLW , CAPPRM:MOM) + MOVOL:400V , CAPPRM:CE + MOVOL:500V , CAPPRM:MHLW + MOVOL:200V) + FREQ:50HZ , (CAPPRM:ASME , CAPPRM:MHLW) + FREQ:60HZ + MOVOL:460V) + CAPPRE:IEC , (MOVOL:230V , MOVOL:460V , MOVOL:575V) + CAPPRE:ULCUL + CAPPRM:ASME + FREQ:60HZ) + COOL:AIR **(21/08/2018 - 10/12/2018)** ((((CAPPRM:AS1210 , CAPPRM:CE , CAPPRM:MHLW , CAPPRM:MOM) + MOVOL:400V , (CAPPRM:CE + MOVOL:500V , CAPPRM:MHLW + MOVOL:200V) + COOL:AIR) + FREQ:50HZ , (CAPPRM:ASME , CAPPRM:MHLW) + FREQ:60HZ + MOVOL:460V) + CAPPRE:IEC , ((MOVOL:230V , MOVOL:575V) + COOL:AIR , MOVOL:460V) + CAPPRE:ULCUL + CAPPRM:ASME + FREQ:60HZ) **(11/12/2018 - 11/12/2018)** ((((CAPPRM:AS1210 , CAPPRM:CE , CAPPRM:MHLW , CAPPRM:MOM) + MOVOL:400V , (CAPPRM:CE + MOVOL:500V , CAPPRM:MHLW + MOVOL:200V) + COOL:AIR) + FREQ:50HZ , (CAPPRM:ASME , CAPPRM:MHLW) + COOL:WATER + FREQ:60HZ + MOVOL:460V) + CAPPRE:IEC , ((MOVOL:230V , MOVOL:575V) + COOL:AIR , MOVOL:460V) + CAPPRE:ULCUL + CAPPRM:ASME + FREQ:60HZ)	

Electrical legend: Ambient sensor

Legend:

CAPPRE:IEC - Component approval electrical:IEC
CAPPRM:ASME - Component approval mechanical:ASME
CAPPRM:MOM - Component approval mechanical:MOM
FREQ:50HZ - Frequency:50 Hz
MODEL:GA75VP_16 - Model:GA 75VSD+
MOVOL:400V - Supply voltage:400 V
MOVOL:575V - Supply voltage:575 V
CAPPRE:ULCUL - Component approval electrical:UL/cUL
CAPPRM:CE - Component approval mechanical:CE
COOL:AIR - Cooling:Air cooled
FREQ:60HZ - Frequency:60 Hz
MOVOL:200V - Supply voltage:200 V
MOVOL:460V - Supply voltage:460 V
CAPPRM:AS1210 - Component approval mechanical:AS1210
CAPPRM:MHLW - Component approval mechanical:MHLW
COOL:WATER - Cooling:Water cooled
IDRY:Y - Integrated dryer:Yes
MOVOL:230V - Supply voltage:230 V
MOVOL:500V - Supply voltage:500 V

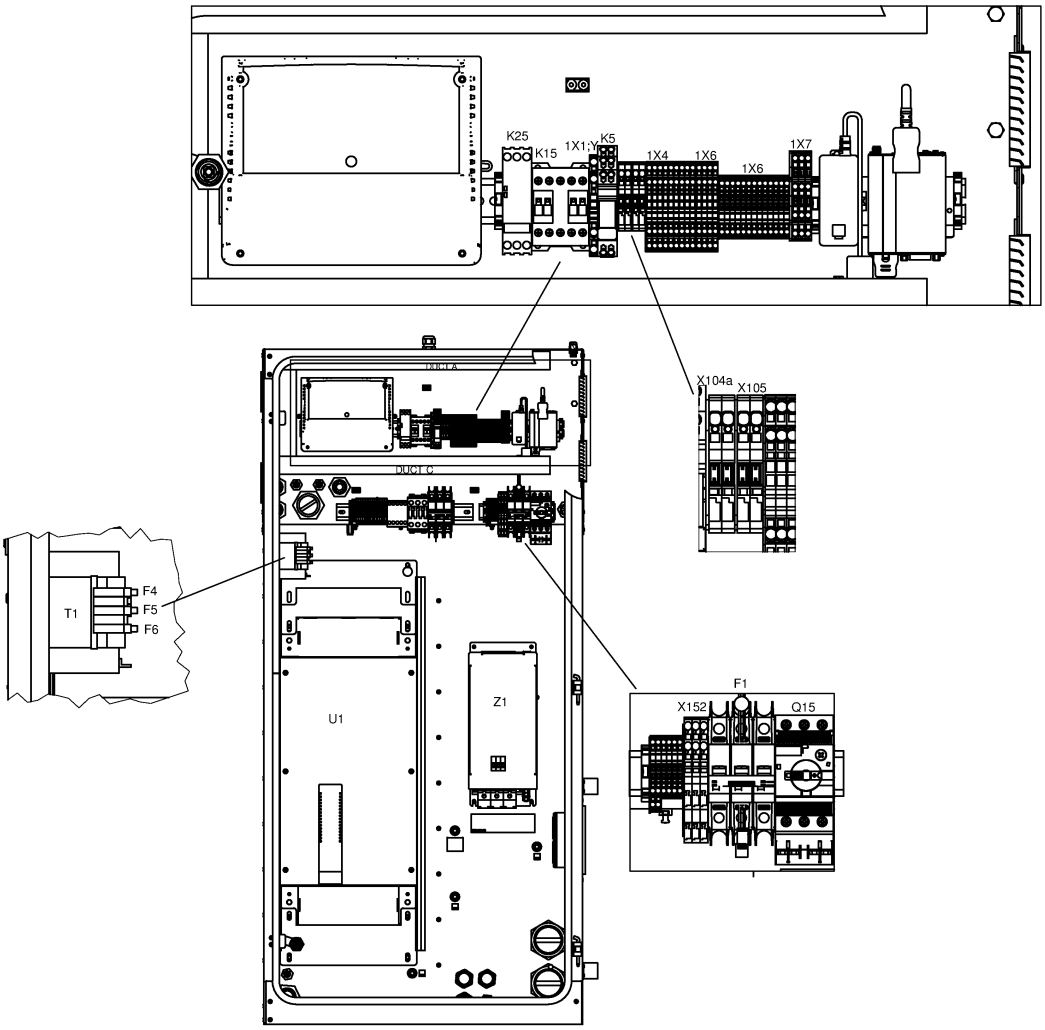
K25
K15
1X1:Y
K5
1X4
1X6
1X6
1X7
DUCT A
DUCT C
X104a
X105
T1
F4
F5
F6
U1
Z1
F1
X152
Q15

21.8 - Cubicle components GA 75L VSD+ - ((200V-400V-500V/50Hz, 460V/60Hz) - IEC, (230V-460V-575V/60Hz - UL-cUL)) - Full-Feature (28/08/2017 - 11/12/2018)

(((MOVOL:200V , MOVOL:400V , MOVOL:500V) + FREQ:50HZ , FREQ:60HZ + MOVOL:460V) + CAPPRE:IEC , (MOVOL:230V , MOVOL:460V , MOVOL:575V) + CAPPRE:ULCUL + FREQ:60HZ) + IDRY:Y + MODEL:GA75VP_16

Ref	Part Number	Qty	Name	Validity	EL
	0697 9809 20	1	LOCKNUT	**(28/08/2017 - 20/08/2018)** ((((CAPPRM:AS1210 , CAPPRM:CE , CAPPRM:MHLW , CAPPRM:MOM) + MOVOL:400V , CAPPRM:CE + MOVOL:500V , CAPPRM:MHLW + MOVOL:200V) + FREQ:50HZ , (CAPPRM:ASME , CAPPRM:MHLW) + FREQ:60HZ + MOVOL:460V) + CAPPRE:IEC , (MOVOL:230V , MOVOL:460V , MOVOL:575V) + CAPPRE:ULCUL + CAPPRM:ASME + FREQ:60HZ) + COOL:AIR **(21/08/2018 - 10/12/2018)** ((((CAPPRM:AS1210 , CAPPRM:CE , CAPPRM:MHLW , CAPPRM:MOM) + MOVOL:400V , (CAPPRM:CE + MOVOL:500V , CAPPRM:MHLW + MOVOL:200V) + COOL:AIR) + FREQ:50HZ , (CAPPRM:ASME , CAPPRM:MHLW) + FREQ:60HZ + MOVOL:460V) + CAPPRE:IEC , ((MOVOL:230V , MOVOL:575V) + COOL:AIR , MOVOL:460V) + CAPPRE:ULCUL + CAPPRM:ASME + FREQ:60HZ) **(11/12/2018 - 11/12/2018)** ((((CAPPRM:AS1210 , CAPPRM:CE , CAPPRM:MHLW , CAPPRM:MOM) + MOVOL:400V , (CAPPRM:CE + MOVOL:500V , CAPPRM:MHLW + MOVOL:200V) + COOL:AIR) + FREQ:50HZ , (CAPPRM:ASME , CAPPRM:MHLW) + COOL:WATER + FREQ:60HZ + MOVOL:460V) + CAPPRE:IEC , ((MOVOL:230V , MOVOL:575V) + COOL:AIR , MOVOL:460V) + CAPPRE:ULCUL + CAPPRM:ASME + FREQ:60HZ)	
	Electrical legend:	Ambient sensor			
	1089 9556 44	1	FAN WITH FILTER	**(28/08/2017 - 20/08/2018)** ((((CAPPRM:AS1210 , CAPPRM:CE , CAPPRM:MHLW , CAPPRM:MOM) + MOVOL:400V , CAPPRM:CE + MOVOL:500V , CAPPRM:MHLW + MOVOL:200V) + FREQ:50HZ , (CAPPRM:ASME , CAPPRM:MHLW) + FREQ:60HZ + MOVOL:460V) + CAPPRE:IEC , (MOVOL:230V , MOVOL:460V , MOVOL:575V) + CAPPRE:ULCUL + CAPPRM:ASME + FREQ:60HZ) + COOL:AIR **(21/08/2018 - 10/12/2018)** ((((CAPPRM:AS1210 , CAPPRM:CE , CAPPRM:MHLW , CAPPRM:MOM) + MOVOL:400V , (CAPPRM:CE + MOVOL:500V , CAPPRM:MHLW + MOVOL:200V) + COOL:AIR) + FREQ:50HZ , (CAPPRM:ASME , CAPPRM:MHLW) + FREQ:60HZ + MOVOL:460V) + CAPPRE:IEC , ((MOVOL:230V , MOVOL:575V) + COOL:AIR , MOVOL:460V) + CAPPRE:ULCUL + CAPPRM:ASME + FREQ:60HZ) **(11/12/2018 - 11/12/2018)** ((((CAPPRM:AS1210 , CAPPRM:CE , CAPPRM:MHLW , CAPPRM:MOM) + MOVOL:400V , (CAPPRM:CE + MOVOL:500V , CAPPRM:MHLW + MOVOL:200V) + COOL:AIR) + FREQ:50HZ , (CAPPRM:ASME , CAPPRM:MHLW) + COOL:WATER + FREQ:60HZ + MOVOL:460V) + CAPPRE:IEC , ((MOVOL:230V , MOVOL:575V) + COOL:AIR , MOVOL:460V) + CAPPRE:ULCUL + CAPPRM:ASME + FREQ:60HZ)	Cubicle fan

Legend:

CAPPRE:IEC - Component approval electrical:IEC
CAPPRM:ASME - Component approval mechanical:ASME
CAPPRM:MOM - Component approval mechanical:MOM
FREQ:50HZ - Frequency:50 Hz
MODEL:GA75VP_16 - Model:GA 75VSD+
MOVOL:400V - Supply voltage:400 V
MOVOL:575V - Supply voltage:575 V
CAPPRE:ULCUL - Component approval electrical:UL/cUL
CAPPRM:CE - Component approval mechanical:CE
COOL:AIR - Cooling:Air cooled
FREQ:60HZ - Frequency:60 Hz
MOVOL:200V - Supply voltage:200 V
MOVOL:460V - Supply voltage:460 V
CAPPRM:AS1210 - Component approval mechanical:AS1210
CAPPRM:MHLW - Component approval mechanical:MHLW
COOL:WATER - Cooling:Water cooled
IDRY:Y - Integrated dryer:Yes
MOVOL:230V - Supply voltage:230 V
MOVOL:500V - Supply voltage:500 V

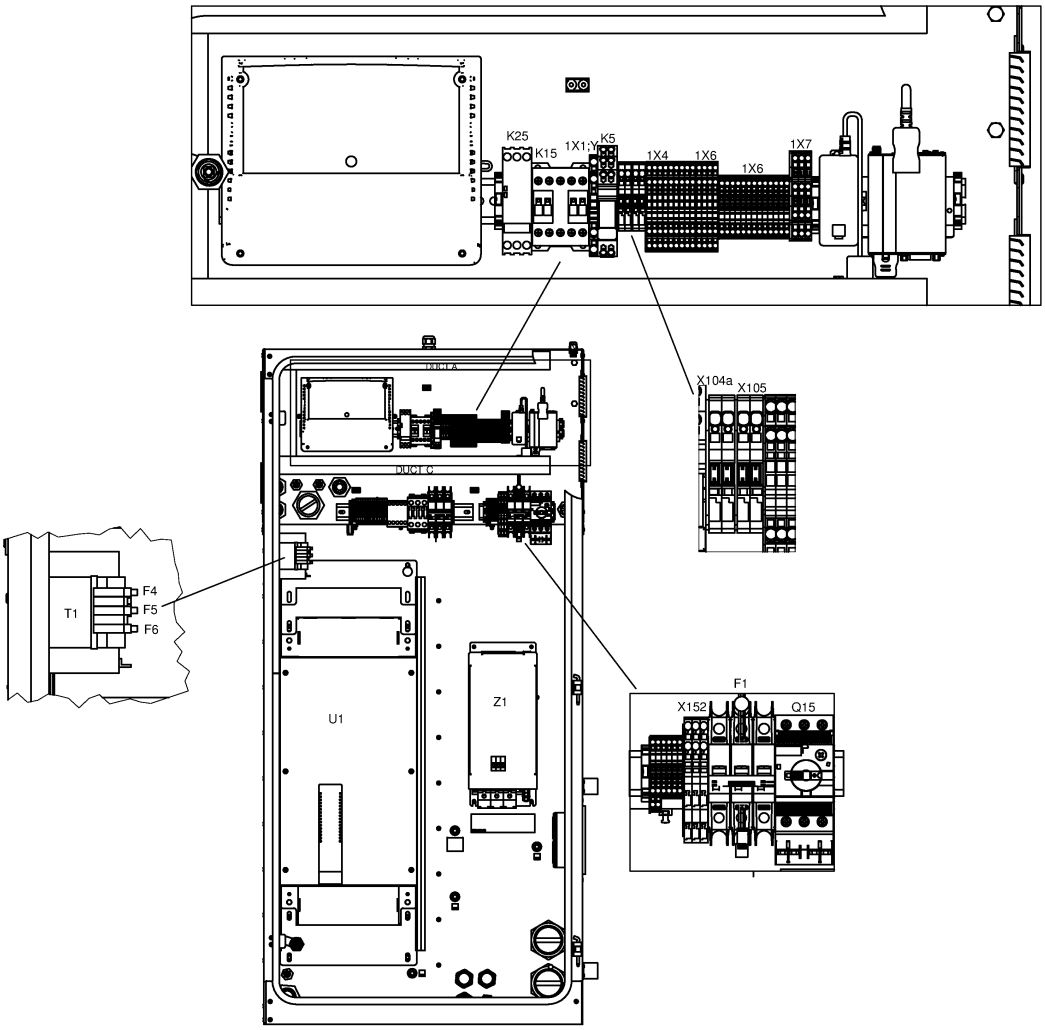
K25
K15
1X1:Y
K5
1X4
1X6
1X6
1X7
DUCT A
DUCT C
X104a
X105
T1
F4
F5
F6
U1
Z1
F1
X152
Q15

21.8 - Cubicle components GA 75L VSD+ - ((200V-400V-500V/50Hz, 460V/60Hz) - IEC, (230V-460V-575V/60Hz - UL-cUL)) - Full-Feature (28/08/2017 - 11/12/2018)

(((MOVOL:200V , MOVOL:400V , MOVOL:500V) + FREQ:50HZ , FREQ:60HZ + MOVOL:460V) + CAPPRE:IEC , (MOVOL:230V , MOVOL:460V , MOVOL:575V) + CAPPRE:ULCUL + FREQ:60HZ) + IDRY:Y + MODEL:GA75VP_16

Ref	Part Number	Qty	Name	Validity	EL
		4	AIR INLET W/O FILTER	**(28/08/2017 - 20/08/2018)** ((((CAPPRM:AS1210 , CAPPRM:CE , CAPPRM:MHLW , CAPPRM:MOM) + MOVOL:400V , CAPPRM:CE + MOVOL:500V , CAPPRM:MHLW + MOVOL:200V) + FREQ:50HZ , (CAPPRM:ASME , CAPPRM:MHLW) + FREQ:60HZ + MOVOL:460V) + CAPPRE:IEC , (MOVOL:230V , MOVOL:460V , MOVOL:575V) + CAPPRE:ULCUL + CAPPRM:ASME + FREQ:60HZ) + COOL:AIR **(21/08/2018 - 10/12/2018)** ((((CAPPRM:AS1210 , CAPPRM:CE , CAPPRM:MHLW , CAPPRM:MOM) + MOVOL:400V , (CAPPRM:CE + MOVOL:500V , CAPPRM:MHLW + MOVOL:200V) + COOL:AIR) + FREQ:50HZ , (CAPPRM:ASME , CAPPRM:MHLW) + FREQ:60HZ + MOVOL:460V) + CAPPRE:IEC , ((MOVOL:230V , MOVOL:575V) + COOL:AIR , MOVOL:460V) + CAPPRE:ULCUL + CAPPRM:ASME + FREQ:60HZ) **(11/12/2018 - 11/12/2018)** ((((CAPPRM:AS1210 , CAPPRM:CE , CAPPRM:MHLW , CAPPRM:MOM) + MOVOL:400V , (CAPPRM:CE + MOVOL:500V , CAPPRM:MHLW + MOVOL:200V) + COOL:AIR) + FREQ:50HZ , (CAPPRM:ASME , CAPPRM:MHLW) + COOL:WATER + FREQ:60HZ + MOVOL:460V) + CAPPRE:IEC , ((MOVOL:230V , MOVOL:575V) + COOL:AIR , MOVOL:460V) + CAPPRE:ULCUL + CAPPRM:ASME + FREQ:60HZ)	-
	Service kits:	2901 9900 95 - AIR FILTER KIT - GA 75L VSD+ 2901 9901 01 - PREVENTIVE MAINTENANCE KIT - GA 75L VSD+			
	1088 0032 09	1	CONNECTOR	**(28/08/2017 - 20/08/2018)** ((((CAPPRM:AS1210 , CAPPRM:CE , CAPPRM:MHLW , CAPPRM:MOM) + MOVOL:400V , CAPPRM:CE + MOVOL:500V , CAPPRM:MHLW + MOVOL:200V) + FREQ:50HZ , (CAPPRM:ASME , CAPPRM:MHLW) + FREQ:60HZ + MOVOL:460V) + CAPPRE:IEC , (MOVOL:230V , MOVOL:460V , MOVOL:575V) + CAPPRE:ULCUL + CAPPRM:ASME + FREQ:60HZ) + COOL:AIR **(21/08/2018 - 10/12/2018)** ((((CAPPRM:AS1210 , CAPPRM:CE , CAPPRM:MHLW , CAPPRM:MOM) + MOVOL:400V , (CAPPRM:CE + MOVOL:500V , CAPPRM:MHLW + MOVOL:200V) + COOL:AIR) + FREQ:50HZ , (CAPPRM:ASME , CAPPRM:MHLW) + FREQ:60HZ + MOVOL:460V) + CAPPRE:IEC , ((MOVOL:230V , MOVOL:575V) + COOL:AIR , MOVOL:460V) + CAPPRE:ULCUL + CAPPRM:ASME + FREQ:60HZ) **(11/12/2018 - 11/12/2018)** ((((CAPPRM:AS1210 , CAPPRM:CE , CAPPRM:MHLW , CAPPRM:MOM) + MOVOL:400V , (CAPPRM:CE + MOVOL:500V , CAPPRM:MHLW + MOVOL:200V) + COOL:AIR) + FREQ:50HZ , (CAPPRM:ASME , CAPPRM:MHLW) + COOL:WATER + FREQ:60HZ + MOVOL:460V) + CAPPRE:IEC , ((MOVOL:230V , MOVOL:575V) + COOL:AIR , MOVOL:460V) + CAPPRE:ULCUL + CAPPRM:ASME + FREQ:60HZ)	X3

Legend:

CAPPRE:IEC - Component approval electrical:IEC
CAPPRM:ASME - Component approval mechanical:ASME
CAPPRM:MOM - Component approval mechanical:MOM
FREQ:50HZ - Frequency:50 Hz
MODEL:GA75VP_16 - Model:GA 75VSD+
MOVOL:400V - Supply voltage:400 V
MOVOL:575V - Supply voltage:575 V
CAPPRE:ULCUL - Component approval electrical:UL/cUL
CAPPRM:CE - Component approval mechanical:CE
COOL:AIR - Cooling:Air cooled
FREQ:60HZ - Frequency:60 Hz
MOVOL:200V - Supply voltage:200 V
MOVOL:460V - Supply voltage:460 V
CAPPRM:AS1210 - Component approval mechanical:AS1210
CAPPRM:MHLW - Component approval mechanical:MHLW
COOL:WATER - Cooling:Water cooled
IDRY:Y - Integrated dryer:Yes
MOVOL:230V - Supply voltage:230 V
MOVOL:500V - Supply voltage:500 V

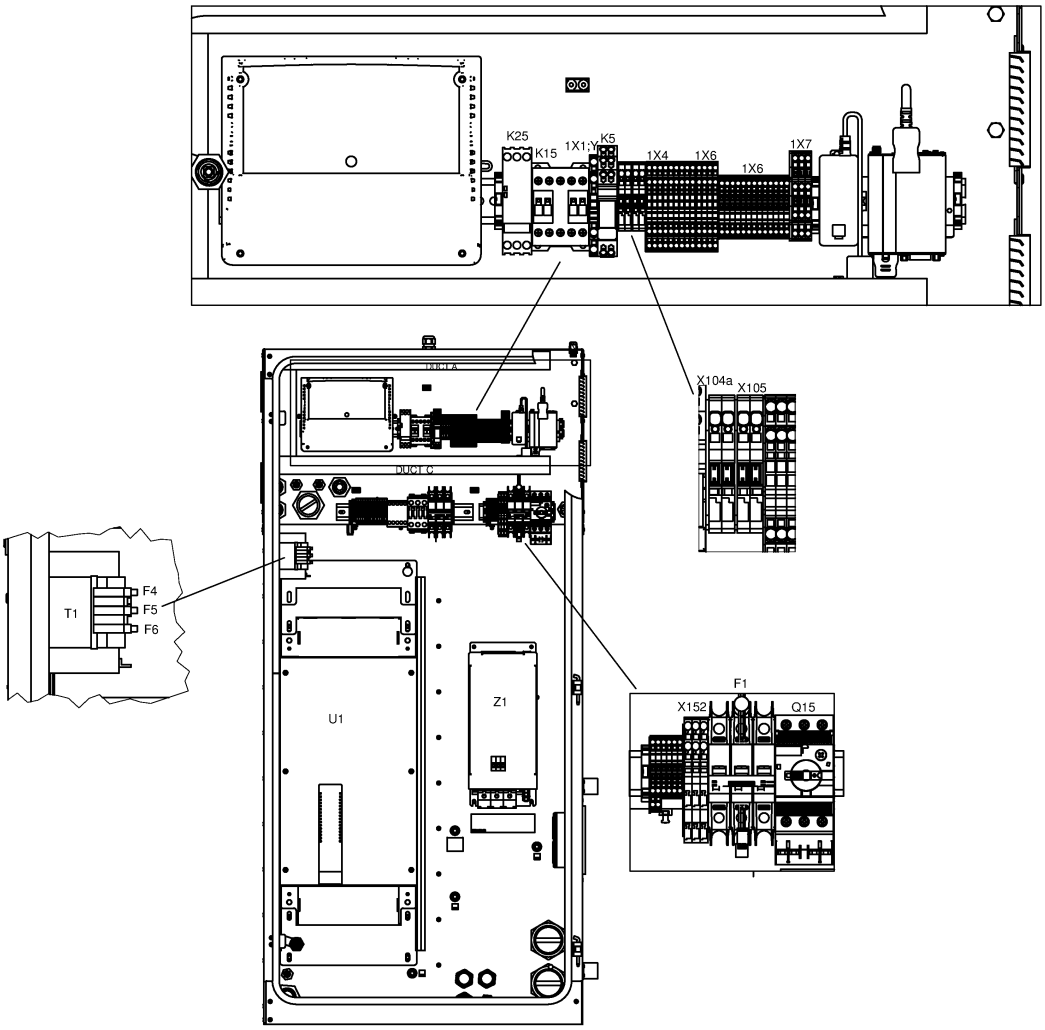
K25
K15
1X1:Y
K5
1X4
1X6
1X6
1X7
DUCT A
DUCT C
X104a
X105
T1
F4
F5
F6
U1
Z1
F1
X152
Q15

21.8 - Cubicle components GA 75L VSD+ - ((200V-400V-500V/50Hz, 460V/60Hz) - IEC, (230V-460V-575V/60Hz - UL-cUL)) - Full-Feature (28/08/2017 - 11/12/2018)

(((MOVOL:200V , MOVOL:400V , MOVOL:500V) + FREQ:50HZ , FREQ:60HZ + MOVOL:460V) + CAPPRE:IEC , (MOVOL:230V , MOVOL:460V , MOVOL:575V) + CAPPRE:ULCUL + FREQ:60HZ) + IDRY:Y + MODEL:GA75VP_16

Ref	Part Number	Qty	Name	Validity	EL
	1089 9572 05	1	LINE FILTER	**(28/08/2017 - 20/08/2018)** ((((CAPPRM:AS1210 , CAPPRM:CE , CAPPRM:MHLW , CAPPRM:MOM) + MOVOL:400V , CAPPRM:CE + MOVOL:500V , CAPPRM:MHLW + MOVOL:200V) + FREQ:50HZ , (CAPPRM:ASME , CAPPRM:MHLW) + FREQ:60HZ + MOVOL:460V) + CAPPRE:IEC , (MOVOL:230V , MOVOL:460V , MOVOL:575V) + CAPPRE:ULCUL + CAPPRM:ASME + FREQ:60HZ) + COOL:AIR **(21/08/2018 - 10/12/2018)** ((((CAPPRM:AS1210 , CAPPRM:CE , CAPPRM:MHLW , CAPPRM:MOM) + MOVOL:400V , (CAPPRM:CE + MOVOL:500V , CAPPRM:MHLW + MOVOL:200V) + COOL:AIR) + FREQ:50HZ , (CAPPRM:ASME , CAPPRM:MHLW) + FREQ:60HZ + MOVOL:460V) + CAPPRE:IEC , ((MOVOL:230V , MOVOL:575V) + COOL:AIR , MOVOL:460V) + CAPPRE:ULCUL + CAPPRM:ASME + FREQ:60HZ) **(11/12/2018 - 11/12/2018)** ((((CAPPRM:AS1210 , CAPPRM:CE , CAPPRM:MHLW , CAPPRM:MOM) + MOVOL:400V , (CAPPRM:CE + MOVOL:500V , CAPPRM:MHLW + MOVOL:200V) + COOL:AIR) + FREQ:50HZ , (CAPPRM:ASME , CAPPRM:MHLW) + COOL:WATER + FREQ:60HZ + MOVOL:460V) + CAPPRE:IEC , ((MOVOL:230V , MOVOL:575V) + COOL:AIR , MOVOL:460V) + CAPPRE:ULCUL + CAPPRM:ASME + FREQ:60HZ)	Z1 for 75 kw
	Electrical legend:	Z1 for 75 kw			
	1089 9562 04	1	STRAP	**(28/08/2017 - 20/08/2018)** ((((CAPPRM:AS1210 , CAPPRM:CE , CAPPRM:MHLW , CAPPRM:MOM) + MOVOL:400V , CAPPRM:CE + MOVOL:500V , CAPPRM:MHLW + MOVOL:200V) + FREQ:50HZ , (CAPPRM:ASME , CAPPRM:MHLW) + FREQ:60HZ + MOVOL:460V) + CAPPRE:IEC , (MOVOL:230V , MOVOL:460V , MOVOL:575V) + CAPPRE:ULCUL + CAPPRM:ASME + FREQ:60HZ) + COOL:AIR **(21/08/2018 - 10/12/2018)** ((((CAPPRM:AS1210 , CAPPRM:CE , CAPPRM:MHLW , CAPPRM:MOM) + MOVOL:400V , (CAPPRM:CE + MOVOL:500V , CAPPRM:MHLW + MOVOL:200V) + COOL:AIR) + FREQ:50HZ , (CAPPRM:ASME , CAPPRM:MHLW) + FREQ:60HZ + MOVOL:460V) + CAPPRE:IEC , ((MOVOL:230V , MOVOL:575V) + COOL:AIR , MOVOL:460V) + CAPPRE:ULCUL + CAPPRM:ASME + FREQ:60HZ) **(11/12/2018 - 11/12/2018)** ((((CAPPRM:AS1210 , CAPPRM:CE , CAPPRM:MHLW , CAPPRM:MOM) + MOVOL:400V , (CAPPRM:CE + MOVOL:500V , CAPPRM:MHLW + MOVOL:200V) + COOL:AIR) + FREQ:50HZ , (CAPPRM:ASME , CAPPRM:MHLW) + COOL:WATER + FREQ:60HZ + MOVOL:460V) + CAPPRE:IEC , ((MOVOL:230V , MOVOL:575V) + COOL:AIR , MOVOL:460V) + CAPPRE:ULCUL + CAPPRM:ASME + FREQ:60HZ)	HF-screen

Legend:

CAPPRE:IEC - Component approval electrical:IEC
CAPPRE:ULCUL - Component approval electrical:UL/cUL
CAPPRM:AS1210 - Component approval mechanical:AS1210
CAPPRM:ASME - Component approval mechanical:ASME
CAPPRM:CE - Component approval mechanical:CE
CAPPRM:MHLW - Component approval mechanical:MHLW
CAPPRM:MOM - Component approval mechanical:MOM
COOL:AIR - Cooling:Air cooled
COOL:WATER - Cooling:Water cooled
FREQ:50HZ - Frequency:50 Hz
FREQ:60HZ - Frequency:60 Hz
IDRY:Y - Integrated dryer:Yes
MODEL:GA75VP_16 - Model:GA 75VSD+
MOVOL:200V - Supply voltage:200 V
MOVOL:230V - Supply voltage:230 V
MOVOL:400V - Supply voltage:400 V
MOVOL:460V - Supply voltage:460 V
MOVOL:500V - Supply voltage:500 V
MOVOL:575V - Supply voltage:575 V

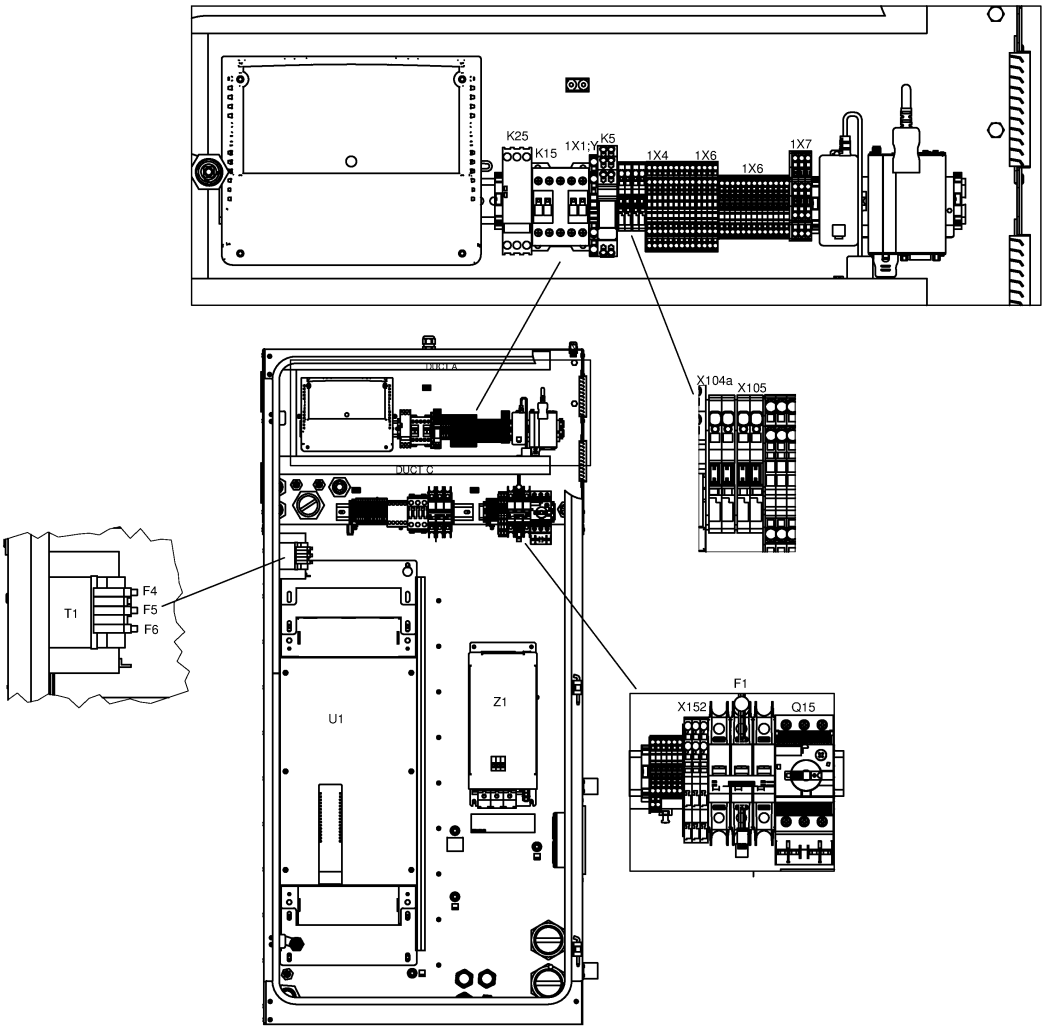
K25
K15
1X1:Y
K5
1X4
1X6
1X6
1X7
DUCT A
DUCT C
X104a
X105
T1
F4
F5
F6
U1
Z1
F1
X152
Q15

21.8 - Cubicle components GA 75L VSD+ - ((200V-400V-500V/50Hz, 460V/60Hz) - IEC, (230V-460V-575V/60Hz - UL-cUL)) - Full-Feature (28/08/2017 - 11/12/2018)

(((MOVOL:200V , MOVOL:400V , MOVOL:500V) + FREQ:50HZ , FREQ:60HZ + MOVOL:460V) + CAPPRE:IEC , (MOVOL:230V , MOVOL:460V , MOVOL:575V) + CAPPRE:ULCUL + FREQ:60HZ) + IDRY:Y + MODEL:GA75VP_16

Ref	Part Number	Qty	Name	Validity	EL
	1089 9514 56	1	TRANSFORMER	**(28/08/2017 - 20/08/2018)** ((((CAPPRM:AS1210 , CAPPRM:CE , CAPPRM:MHLW , CAPPRM:MOM) + MOVOL:400V , CAPPRM:CE + MOVOL:500V , CAPPRM:MHLW + MOVOL:200V) + FREQ:50HZ , (CAPPRM:ASME , CAPPRM:MHLW) + FREQ:60HZ + MOVOL:460V) + CAPPRE:IEC , (MOVOL:230V , MOVOL:460V , MOVOL:575V) + CAPPRE:ULCUL + CAPPRM:ASME + FREQ:60HZ) + COOL:AIR **(21/08/2018 - 10/12/2018)** ((((CAPPRM:AS1210 , CAPPRM:CE , CAPPRM:MHLW , CAPPRM:MOM) + MOVOL:400V , (CAPPRM:CE + MOVOL:500V , CAPPRM:MHLW + MOVOL:200V) + COOL:AIR) + FREQ:50HZ , (CAPPRM:ASME , CAPPRM:MHLW) + FREQ:60HZ + MOVOL:460V) + CAPPRE:IEC , ((MOVOL:230V , MOVOL:575V) + COOL:AIR , MOVOL:460V) + CAPPRE:ULCUL + CAPPRM:ASME + FREQ:60HZ) **(11/12/2018 - 11/12/2018)** ((((CAPPRM:AS1210 , CAPPRM:CE , CAPPRM:MHLW , CAPPRM:MOM) + MOVOL:400V , (CAPPRM:CE + MOVOL:500V , CAPPRM:MHLW + MOVOL:200V) + COOL:AIR) + FREQ:50HZ , (CAPPRM:ASME , CAPPRM:MHLW) + COOL:WATER + FREQ:60HZ + MOVOL:460V) + CAPPRE:IEC , ((MOVOL:230V , MOVOL:575V) + COOL:AIR , MOVOL:460V) + CAPPRE:ULCUL + CAPPRM:ASME + FREQ:60HZ)	T1
	1089 9522 26	1	CIRCUIT BREAKER	**(28/08/2017 - 20/08/2018)** ((((CAPPRM:AS1210 , CAPPRM:CE , CAPPRM:MHLW , CAPPRM:MOM) + MOVOL:400V , CAPPRM:CE + MOVOL:500V , CAPPRM:MHLW + MOVOL:200V) + FREQ:50HZ , (CAPPRM:ASME , CAPPRM:MHLW) + FREQ:60HZ + MOVOL:460V) + CAPPRE:IEC , (MOVOL:230V , MOVOL:460V , MOVOL:575V) + CAPPRE:ULCUL + CAPPRM:ASME + FREQ:60HZ) + COOL:AIR **(21/08/2018 - 10/12/2018)** ((((CAPPRM:AS1210 , CAPPRM:CE , CAPPRM:MHLW , CAPPRM:MOM) + MOVOL:400V , (CAPPRM:CE + MOVOL:500V , CAPPRM:MHLW + MOVOL:200V) + COOL:AIR) + FREQ:50HZ , (CAPPRM:ASME , CAPPRM:MHLW) + FREQ:60HZ + MOVOL:460V) + CAPPRE:IEC , ((MOVOL:230V , MOVOL:575V) + COOL:AIR , MOVOL:460V) + CAPPRE:ULCUL + CAPPRM:ASME + FREQ:60HZ) **(11/12/2018 - 11/12/2018)** ((((CAPPRM:AS1210 , CAPPRM:CE , CAPPRM:MHLW , CAPPRM:MOM) + MOVOL:400V , (CAPPRM:CE + MOVOL:500V , CAPPRM:MHLW + MOVOL:200V) + COOL:AIR) + FREQ:50HZ , (CAPPRM:ASME , CAPPRM:MHLW) + COOL:WATER + FREQ:60HZ + MOVOL:460V) + CAPPRE:IEC , ((MOVOL:230V , MOVOL:575V) + COOL:AIR , MOVOL:460V) + CAPPRE:ULCUL + CAPPRM:ASME + FREQ:60HZ)	F1

Legend:

CAPPRE:IEC - Component approval electrical:IEC
CAPPRE:ULCUL - Component approval electrical:UL/cUL
CAPPRM:AS1210 - Component approval mechanical:AS1210
CAPPRM:ASME - Component approval mechanical:ASME
CAPPRM:CE - Component approval mechanical:CE
CAPPRM:MHLW - Component approval mechanical:MHLW
CAPPRM:MOM - Component approval mechanical:MOM
COOL:AIR - Cooling:Air cooled
COOL:WATER - Cooling:Water cooled
FREQ:50HZ - Frequency:50 Hz
FREQ:60HZ - Frequency:60 Hz
IDRY:Y - Integrated dryer:Yes
MODEL:GA75VP_16 - Model:GA 75VSD+
MOVOL:200V - Supply voltage:200 V
MOVOL:230V - Supply voltage:230 V
MOVOL:400V - Supply voltage:400 V
MOVOL:460V - Supply voltage:460 V
MOVOL:500V - Supply voltage:500 V
MOVOL:575V - Supply voltage:575 V

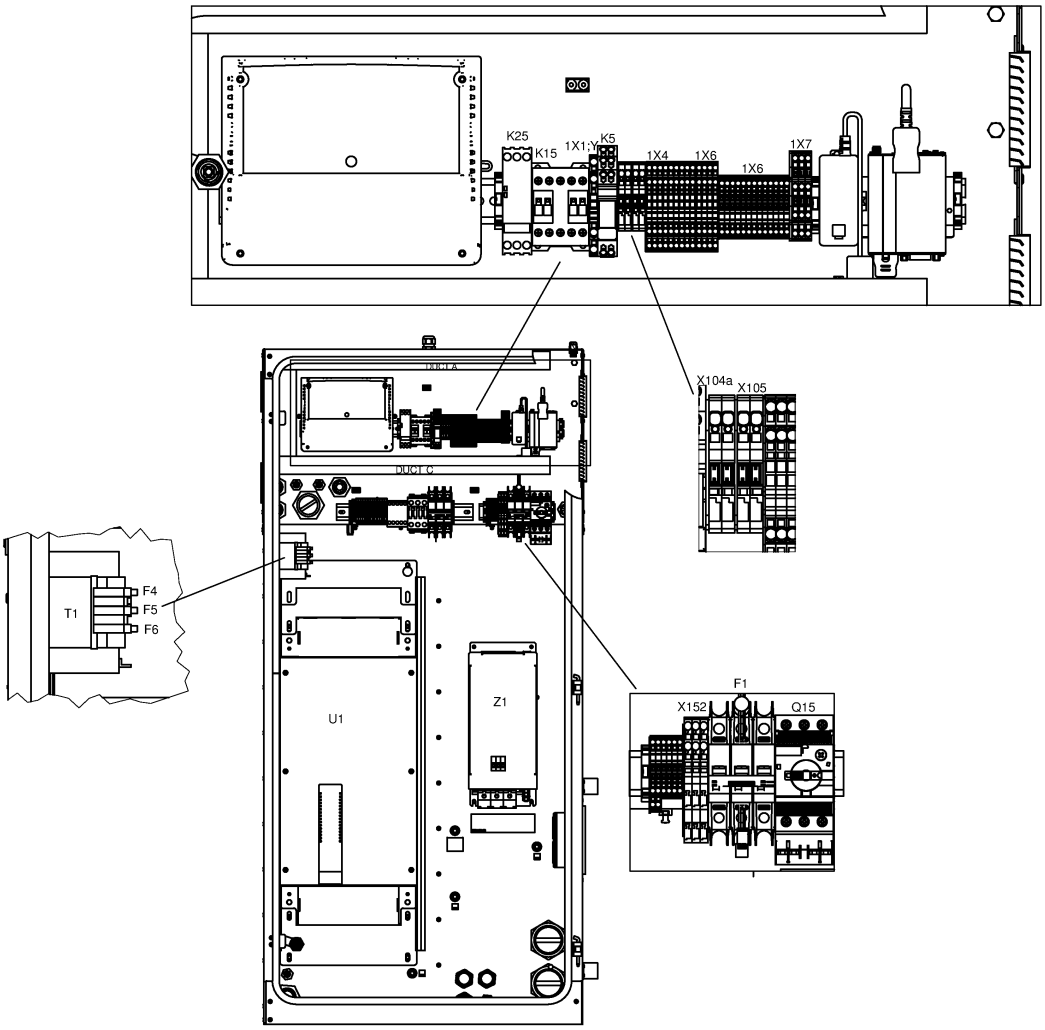
K25
K15
1X1:Y
K5
1X4
1X6
1X6
1X7
DUCT A
DUCT C
X104a
X105
T1
F4
F5
F6
U1
Z1
F1
X152
Q15

21.8 - Cubicle components GA 75L VSD+ - ((200V-400V-500V/50Hz, 460V/60Hz) - IEC, (230V-460V-575V/60Hz - UL-cUL)) - Full-Feature (28/08/2017 - 11/12/2018)

(((MOVOL:200V , MOVOL:400V , MOVOL:500V) + FREQ:50HZ , FREQ:60HZ + MOVOL:460V) + CAPPRE:IEC , (MOVOL:230V , MOVOL:460V , MOVOL:575V) + CAPPRE:ULCUL + FREQ:60HZ) + IDRY:Y + MODEL:GA75VP_16

Ref	Part Number	Qty	Name	Validity	EL
	1089 9513 41	1	PUSH BUTTON	**(28/08/2017 - 20/08/2018)** ((((CAPPRM:AS1210 , CAPPRM:CE , CAPPRM:MHLW , CAPPRM:MOM) + MOVOL:400V , CAPPRM:CE + MOVOL:500V , CAPPRM:MHLW + MOVOL:200V) + FREQ:50HZ , (CAPPRM:ASME , CAPPRM:MHLW) + FREQ:60HZ + MOVOL:460V) + CAPPRE:IEC , (MOVOL:230V , MOVOL:460V , MOVOL:575V) + CAPPRE:ULCUL + CAPPRM:ASME + FREQ:60HZ) + COOL:AIR **(21/08/2018 - 10/12/2018)** ((((CAPPRM:AS1210 , CAPPRM:CE , CAPPRM:MHLW , CAPPRM:MOM) + MOVOL:400V , (CAPPRM:CE + MOVOL:500V , CAPPRM:MHLW + MOVOL:200V) + COOL:AIR) + FREQ:50HZ , (CAPPRM:ASME , CAPPRM:MHLW) + FREQ:60HZ + MOVOL:460V) + CAPPRE:IEC , ((MOVOL:230V , MOVOL:575V) + COOL:AIR , MOVOL:460V) + CAPPRE:ULCUL + CAPPRM:ASME + FREQ:60HZ) **(11/12/2018 - 11/12/2018)** ((((CAPPRM:AS1210 , CAPPRM:CE , CAPPRM:MHLW , CAPPRM:MOM) + MOVOL:400V , (CAPPRM:CE + MOVOL:500V , CAPPRM:MHLW + MOVOL:200V) + COOL:AIR) + FREQ:50HZ , (CAPPRM:ASME , CAPPRM:MHLW) + COOL:WATER + FREQ:60HZ + MOVOL:460V) + CAPPRE:IEC , ((MOVOL:230V , MOVOL:575V) + COOL:AIR , MOVOL:460V) + CAPPRE:ULCUL + CAPPRM:ASME + FREQ:60HZ)	S3
	1089 9513 28	1	HOLDER	**(28/08/2017 - 20/08/2018)** ((((CAPPRM:AS1210 , CAPPRM:CE , CAPPRM:MHLW , CAPPRM:MOM) + MOVOL:400V , CAPPRM:CE + MOVOL:500V , CAPPRM:MHLW + MOVOL:200V) + FREQ:50HZ , (CAPPRM:ASME , CAPPRM:MHLW) + FREQ:60HZ + MOVOL:460V) + CAPPRE:IEC , (MOVOL:230V , MOVOL:460V , MOVOL:575V) + CAPPRE:ULCUL + CAPPRM:ASME + FREQ:60HZ) + COOL:AIR **(21/08/2018 - 10/12/2018)** ((((CAPPRM:AS1210 , CAPPRM:CE , CAPPRM:MHLW , CAPPRM:MOM) + MOVOL:400V , (CAPPRM:CE + MOVOL:500V , CAPPRM:MHLW + MOVOL:200V) + COOL:AIR) + FREQ:50HZ , (CAPPRM:ASME , CAPPRM:MHLW) + FREQ:60HZ + MOVOL:460V) + CAPPRE:IEC , ((MOVOL:230V , MOVOL:575V) + COOL:AIR , MOVOL:460V) + CAPPRE:ULCUL + CAPPRM:ASME + FREQ:60HZ) **(11/12/2018 - 11/12/2018)** ((((CAPPRM:AS1210 , CAPPRM:CE , CAPPRM:MHLW , CAPPRM:MOM) + MOVOL:400V , (CAPPRM:CE + MOVOL:500V , CAPPRM:MHLW + MOVOL:200V) + COOL:AIR) + FREQ:50HZ , (CAPPRM:ASME , CAPPRM:MHLW) + COOL:WATER + FREQ:60HZ + MOVOL:460V) + CAPPRE:IEC , ((MOVOL:230V , MOVOL:575V) + COOL:AIR , MOVOL:460V) + CAPPRE:ULCUL + CAPPRM:ASME + FREQ:60HZ)	S3

Legend:

CAPPRE:IEC - Component approval electrical:IEC
CAPPRM:ASME - Component approval mechanical:ASME
CAPPRM:MOM - Component approval mechanical:MOM
FREQ:50HZ - Frequency:50 Hz
MODEL:GA75VP_16 - Model:GA 75VSD+
MOVOL:400V - Supply voltage:400 V
MOVOL:575V - Supply voltage:575 V
CAPPRE:ULCUL - Component approval electrical:UL/cUL
CAPPRM:CE - Component approval mechanical:CE
COOL:AIR - Cooling:Air cooled
FREQ:60HZ - Frequency:60 Hz
MOVOL:200V - Supply voltage:200 V
MOVOL:460V - Supply voltage:460 V
CAPPRM:AS1210 - Component approval mechanical:AS1210
CAPPRM:MHLW - Component approval mechanical:MHLW
COOL:WATER - Cooling:Water cooled
IDRY:Y - Integrated dryer:Yes
MOVOL:230V - Supply voltage:230 V
MOVOL:500V - Supply voltage:500 V

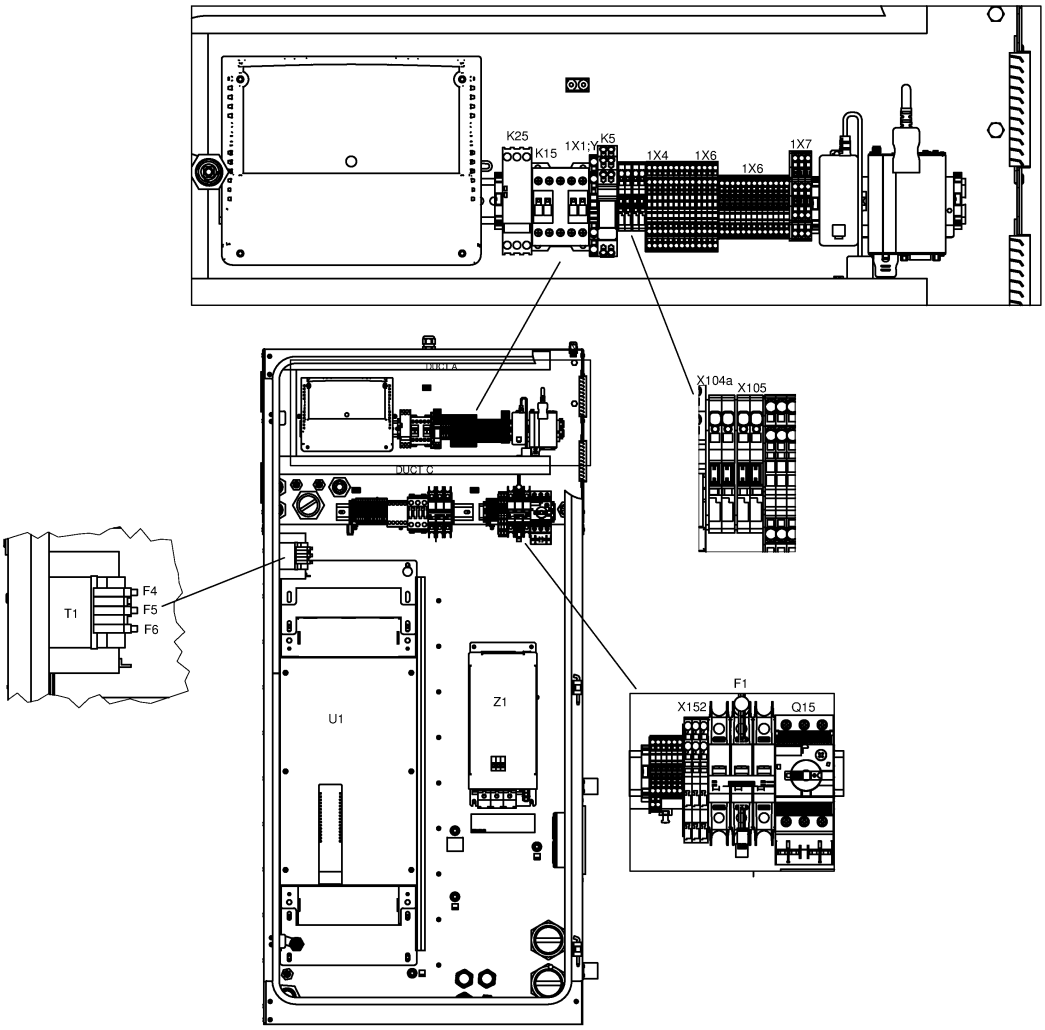
K25
K15
1X1:Y
K5
1X4
1X6
1X6
1X7
DUCT A
DUCT C
X104a
X105
T1
F4
F5
F6
U1
Z1
F1
X152
Q15

21.8 - Cubicle components GA 75L VSD+ - ((200V-400V-500V/50Hz, 460V/60Hz) - IEC, (230V-460V-575V/60Hz - UL-cUL)) - Full-Feature (28/08/2017 - 11/12/2018)

(((MOVOL:200V , MOVOL:400V , MOVOL:500V) + FREQ:50HZ , FREQ:60HZ + MOVOL:460V) + CAPPRE:IEC , (MOVOL:230V , MOVOL:460V , MOVOL:575V) + CAPPRE:ULCUL + FREQ:60HZ) + IDRY:Y + MODEL:GA75VP_16

Ref	Part Number	Qty	Name	Validity	EL
	~~1089 9513 30~~	4	CONTACTOR	**(28/08/2017 - 20/08/2018)** ((((CAPPRM:AS1210 , CAPPRM:CE , CAPPRM:MHLW , CAPPRM:MOM) + MOVOL:400V , CAPPRM:CE + MOVOL:500V , CAPPRM:MHLW + MOVOL:200V) + FREQ:50HZ , (CAPPRM:ASME , CAPPRM:MHLW) + FREQ:60HZ + MOVOL:460V) + CAPPRE:IEC , (MOVOL:230V , MOVOL:460V , MOVOL:575V) + CAPPRE:ULCUL + CAPPRM:ASME + FREQ:60HZ) + COOL:AIR **(21/08/2018 - 10/12/2018)** ((((CAPPRM:AS1210 , CAPPRM:CE , CAPPRM:MHLW , CAPPRM:MOM) + MOVOL:400V , (CAPPRM:CE + MOVOL:500V , CAPPRM:MHLW + MOVOL:200V) + COOL:AIR) + FREQ:50HZ , (CAPPRM:ASME , CAPPRM:MHLW) + FREQ:60HZ + MOVOL:460V) + CAPPRE:IEC , ((MOVOL:230V , MOVOL:575V) + COOL:AIR , MOVOL:460V) + CAPPRE:ULCUL + CAPPRM:ASME + FREQ:60HZ) **(11/12/2018 - 11/12/2018)** ((((CAPPRM:AS1210 , CAPPRM:CE , CAPPRM:MHLW , CAPPRM:MOM) + MOVOL:400V , (CAPPRM:CE + MOVOL:500V , CAPPRM:MHLW + MOVOL:200V) + COOL:AIR) + FREQ:50HZ , (CAPPRM:ASME , CAPPRM:MHLW) + COOL:WATER + FREQ:60HZ + MOVOL:460V) + CAPPRE:IEC , ((MOVOL:230V , MOVOL:575V) + COOL:AIR , MOVOL:460V) + CAPPRE:ULCUL + CAPPRM:ASME + FREQ:60HZ)	S3
	Substituted by:	1089 9513 04 - CONTACT BLOCK (quantity: 1)			
	1088 0031 02	1	CONNECTOR 2-POLE	**(28/08/2017 - 20/08/2018)** ((((CAPPRM:AS1210 , CAPPRM:CE , CAPPRM:MHLW , CAPPRM:MOM) + MOVOL:400V , CAPPRM:CE + MOVOL:500V , CAPPRM:MHLW + MOVOL:200V) + FREQ:50HZ , (CAPPRM:ASME , CAPPRM:MHLW) + FREQ:60HZ + MOVOL:460V) + CAPPRE:IEC , (MOVOL:230V , MOVOL:460V , MOVOL:575V) + CAPPRE:ULCUL + CAPPRM:ASME + FREQ:60HZ) + COOL:AIR **(21/08/2018 - 10/12/2018)** ((((CAPPRM:AS1210 , CAPPRM:CE , CAPPRM:MHLW , CAPPRM:MOM) + MOVOL:400V , (CAPPRM:CE + MOVOL:500V , CAPPRM:MHLW + MOVOL:200V) + COOL:AIR) + FREQ:50HZ , (CAPPRM:ASME , CAPPRM:MHLW) + FREQ:60HZ + MOVOL:460V) + CAPPRE:IEC , ((MOVOL:230V , MOVOL:575V) + COOL:AIR , MOVOL:460V) + CAPPRE:ULCUL + CAPPRM:ASME + FREQ:60HZ) **(11/12/2018 - 11/12/2018)** ((((CAPPRM:AS1210 , CAPPRM:CE , CAPPRM:MHLW , CAPPRM:MOM) + MOVOL:400V , (CAPPRM:CE + MOVOL:500V , CAPPRM:MHLW + MOVOL:200V) + COOL:AIR) + FREQ:50HZ , (CAPPRM:ASME , CAPPRM:MHLW) + COOL:WATER + FREQ:60HZ + MOVOL:460V) + CAPPRE:IEC , ((MOVOL:230V , MOVOL:575V) + COOL:AIR , MOVOL:460V) + CAPPRE:ULCUL + CAPPRM:ASME + FREQ:60HZ)	
	Electrical legend:	X153 (Smartbox)			

Legend:

CAPPRE:IEC - Component approval electrical:IEC
CAPPRM:ASME - Component approval mechanical:ASME
CAPPRM:MOM - Component approval mechanical:MOM
FREQ:50HZ - Frequency:50 Hz
MODEL:GA75VP_16 - Model:GA 75VSD+
MOVOL:400V - Supply voltage:400 V
MOVOL:575V - Supply voltage:575 V
CAPPRE:ULCUL - Component approval electrical:UL/cUL
CAPPRM:CE - Component approval mechanical:CE
COOL:AIR - Cooling:Air cooled
FREQ:60HZ - Frequency:60 Hz
MOVOL:200V - Supply voltage:200 V
MOVOL:460V - Supply voltage:460 V
CAPPRM:AS1210 - Component approval mechanical:AS1210
CAPPRM:MHLW - Component approval mechanical:MHLW
COOL:WATER - Cooling:Water cooled
IDRY:Y - Integrated dryer:Yes
MOVOL:230V - Supply voltage:230 V
MOVOL:500V - Supply voltage:500 V

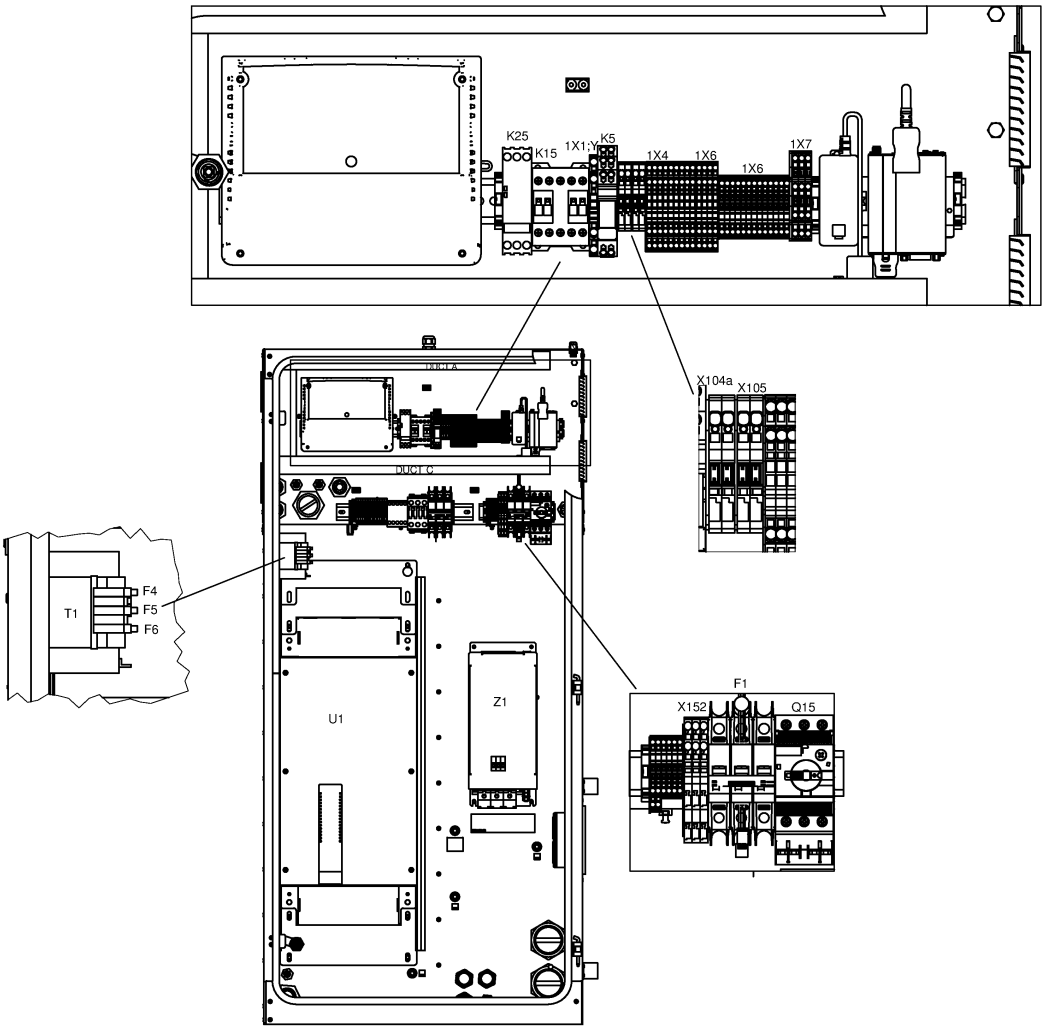
K25
K15
1X1:Y
K5
1X4
1X6
1X6
1X7
DUCT A
DUCT C
X104a
X105
T1
F4
F5
F6
U1
Z1
F1
X152
Q15

21.8 - Cubicle components GA 75L VSD+ - ((200V-400V-500V/50Hz, 460V/60Hz) - IEC, (230V-460V-575V/60Hz - UL-cUL)) - Full-Feature (28/08/2017 - 11/12/2018)

(((MOVOL:200V , MOVOL:400V , MOVOL:500V) + FREQ:50HZ , FREQ:60HZ + MOVOL:460V) + CAPPRE:IEC , (MOVOL:230V , MOVOL:460V , MOVOL:575V) + CAPPRE:ULCUL + FREQ:60HZ) + IDRY:Y + MODEL:GA75VP_16

Ref	Part Number	Qty	Name	Validity	EL
	1088 0039 07	3	TERMINAL	**(28/08/2017 - 20/08/2018)** ((((CAPPRM:AS1210 , CAPPRM:CE , CAPPRM:MHLW , CAPPRM:MOM) + MOVOL:400V , CAPPRM:CE + MOVOL:500V , CAPPRM:MHLW + MOVOL:200V) + FREQ:50HZ , (CAPPRM:ASME , CAPPRM:MHLW) + FREQ:60HZ + MOVOL:460V) + CAPPRE:IEC , (MOVOL:230V , MOVOL:460V , MOVOL:575V) + CAPPRE:ULCUL + CAPPRM:ASME + FREQ:60HZ) + COOL:AIR **(21/08/2018 - 10/12/2018)** ((((CAPPRM:AS1210 , CAPPRM:CE , CAPPRM:MHLW , CAPPRM:MOM) + MOVOL:400V , (CAPPRM:CE + MOVOL:500V , CAPPRM:MHLW + MOVOL:200V) + COOL:AIR) + FREQ:50HZ , (CAPPRM:ASME , CAPPRM:MHLW) + FREQ:60HZ + MOVOL:460V) + CAPPRE:IEC , ((MOVOL:230V , MOVOL:575V) + COOL:AIR , MOVOL:460V) + CAPPRE:ULCUL + CAPPRM:ASME + FREQ:60HZ) **(11/12/2018 - 11/12/2018)** ((((CAPPRM:AS1210 , CAPPRM:CE , CAPPRM:MHLW , CAPPRM:MOM) + MOVOL:400V , (CAPPRM:CE + MOVOL:500V , CAPPRM:MHLW + MOVOL:200V) + COOL:AIR) + FREQ:50HZ , (CAPPRM:ASME , CAPPRM:MHLW) + COOL:WATER + FREQ:60HZ + MOVOL:460V) + CAPPRE:IEC , ((MOVOL:230V , MOVOL:575V) + COOL:AIR , MOVOL:460V) + CAPPRE:ULCUL + CAPPRM:ASME + FREQ:60HZ)	X152
	1088 0039 05	1	PLATE	**(28/08/2017 - 20/08/2018)** ((((CAPPRM:AS1210 , CAPPRM:CE , CAPPRM:MHLW , CAPPRM:MOM) + MOVOL:400V , CAPPRM:CE + MOVOL:500V , CAPPRM:MHLW + MOVOL:200V) + FREQ:50HZ , (CAPPRM:ASME , CAPPRM:MHLW) + FREQ:60HZ + MOVOL:460V) + CAPPRE:IEC , (MOVOL:230V , MOVOL:460V , MOVOL:575V) + CAPPRE:ULCUL + CAPPRM:ASME + FREQ:60HZ) + COOL:AIR **(21/08/2018 - 10/12/2018)** ((((CAPPRM:AS1210 , CAPPRM:CE , CAPPRM:MHLW , CAPPRM:MOM) + MOVOL:400V , (CAPPRM:CE + MOVOL:500V , CAPPRM:MHLW + MOVOL:200V) + COOL:AIR) + FREQ:50HZ , (CAPPRM:ASME , CAPPRM:MHLW) + FREQ:60HZ + MOVOL:460V) + CAPPRE:IEC , ((MOVOL:230V , MOVOL:575V) + COOL:AIR , MOVOL:460V) + CAPPRE:ULCUL + CAPPRM:ASME + FREQ:60HZ) **(11/12/2018 - 11/12/2018)** ((((CAPPRM:AS1210 , CAPPRM:CE , CAPPRM:MHLW , CAPPRM:MOM) + MOVOL:400V , (CAPPRM:CE + MOVOL:500V , CAPPRM:MHLW + MOVOL:200V) + COOL:AIR) + FREQ:50HZ , (CAPPRM:ASME , CAPPRM:MHLW) + COOL:WATER + FREQ:60HZ + MOVOL:460V) + CAPPRE:IEC , ((MOVOL:230V , MOVOL:575V) + COOL:AIR , MOVOL:460V) + CAPPRE:ULCUL + CAPPRM:ASME + FREQ:60HZ)	X152

Legend:

CAPPRE:IEC - Component approval electrical:IEC
CAPPRM:ASME - Component approval mechanical:ASME
CAPPRM:MOM - Component approval mechanical:MOM
FREQ:50HZ - Frequency:50 Hz
MODEL:GA75VP_16 - Model:GA 75VSD+
MOVOL:400V - Supply voltage:400 V
MOVOL:575V - Supply voltage:575 V
CAPPRE:ULCUL - Component approval electrical:UL/cUL
CAPPRM:CE - Component approval mechanical:CE
COOL:AIR - Cooling:Air cooled
FREQ:60HZ - Frequency:60 Hz
MOVOL:200V - Supply voltage:200 V
MOVOL:460V - Supply voltage:460 V
CAPPRM:AS1210 - Component approval mechanical:AS1210
CAPPRM:MHLW - Component approval mechanical:MHLW
COOL:WATER - Cooling:Water cooled
IDRY:Y - Integrated dryer:Yes
MOVOL:230V - Supply voltage:230 V
MOVOL:500V - Supply voltage:500 V

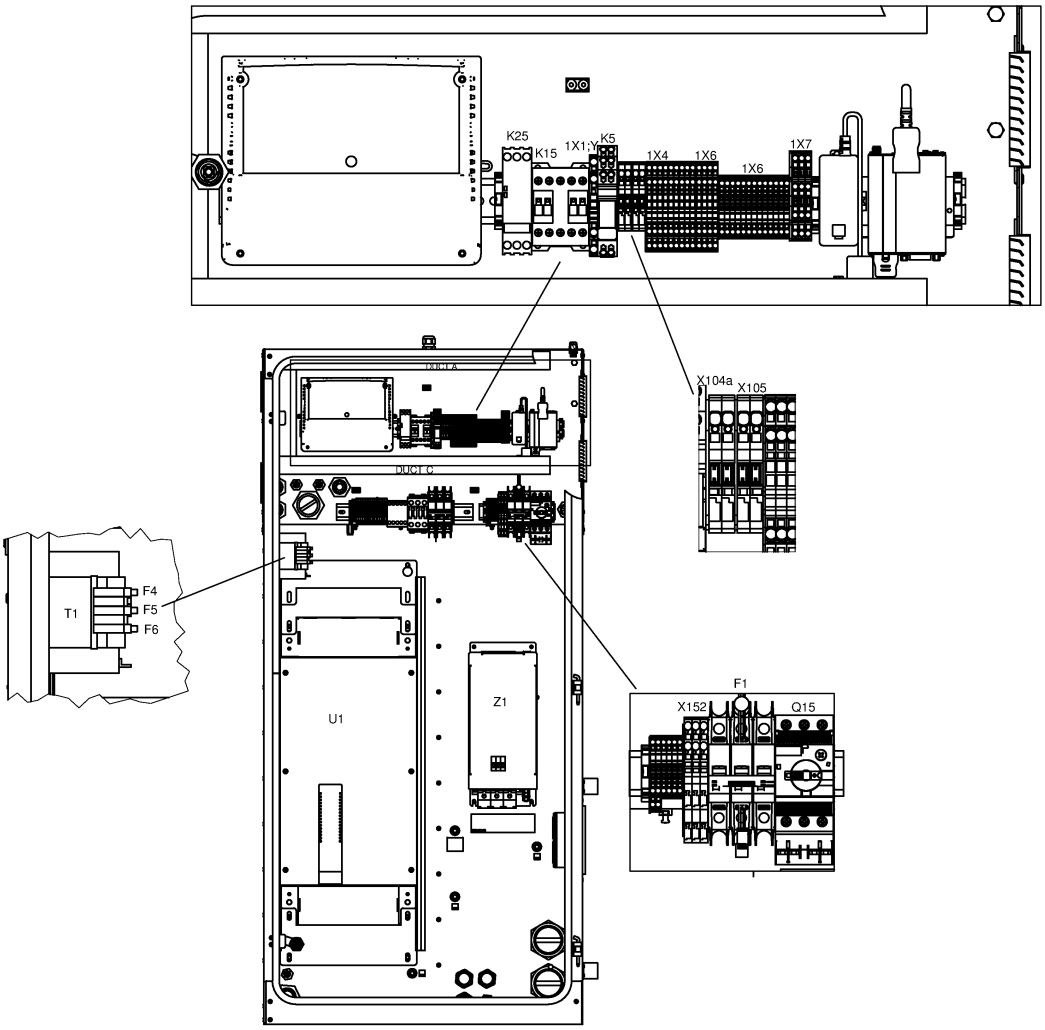
K25
K15
1X1:Y
K5
1X4
1X6
1X6
1X7
DUCT A
DUCT C
X104a
X105
T1
F4
F5
F6
U1
Z1
F1
X152
Q15

21.8 - Cubicle components GA 75L VSD+ - ((200V-400V-500V/50Hz, 460V/60Hz) - IEC, (230V-460V-575V/60Hz - UL-cUL)) - Full-Feature (28/08/2017 - 11/12/2018)

(((MOVOL:200V , MOVOL:400V , MOVOL:500V) + FREQ:50HZ , FREQ:60HZ + MOVOL:460V) + CAPPRE:IEC , (MOVOL:230V , MOVOL:460V , MOVOL:575V) + CAPPRE:ULCUL + FREQ:60HZ) + IDRY:Y + MODEL:GA75VP_16

Ref	Part Number	Qty	Name	Validity	EL
	1088 0039 26	1	CONNECTOR	**(28/08/2017 - 20/08/2018)** ((((CAPPRM:AS1210 , CAPPRM:CE , CAPPRM:MHLW , CAPPRM:MOM) + MOVOL:400V , CAPPRM:CE + MOVOL:500V , CAPPRM:MHLW + MOVOL:200V) + FREQ:50HZ , (CAPPRM:ASME , CAPPRM:MHLW) + FREQ:60HZ + MOVOL:460V) + CAPPRE:IEC , (MOVOL:230V , MOVOL:460V , MOVOL:575V) + CAPPRE:ULCUL + CAPPRM:ASME + FREQ:60HZ) + COOL:AIR **(21/08/2018 - 10/12/2018)** ((((CAPPRM:AS1210 , CAPPRM:CE , CAPPRM:MHLW , CAPPRM:MOM) + MOVOL:400V , (CAPPRM:CE + MOVOL:500V , CAPPRM:MHLW + MOVOL:200V) + COOL:AIR) + FREQ:50HZ , (CAPPRM:ASME , CAPPRM:MHLW) + FREQ:60HZ + MOVOL:460V) + CAPPRE:IEC , ((MOVOL:230V , MOVOL:575V) + COOL:AIR , MOVOL:460V) + CAPPRE:ULCUL + CAPPRM:ASME + FREQ:60HZ) **(11/12/2018 - 11/12/2018)** ((((CAPPRM:AS1210 , CAPPRM:CE , CAPPRM:MHLW , CAPPRM:MOM) + MOVOL:400V , (CAPPRM:CE + MOVOL:500V , CAPPRM:MHLW + MOVOL:200V) + COOL:AIR) + FREQ:50HZ , (CAPPRM:ASME , CAPPRM:MHLW) + COOL:WATER + FREQ:60HZ + MOVOL:460V) + CAPPRE:IEC , ((MOVOL:230V , MOVOL:575V) + COOL:AIR , MOVOL:460V) + CAPPRE:ULCUL + CAPPRM:ASME + FREQ:60HZ)	
	Electrical legend:	X152 (remove coding pin 1,3)			
	1088 0037 99	4	PIN	**(28/08/2017 - 20/08/2018)** ((((CAPPRM:AS1210 , CAPPRM:CE , CAPPRM:MHLW , CAPPRM:MOM) + MOVOL:400V , CAPPRM:CE + MOVOL:500V , CAPPRM:MHLW + MOVOL:200V) + FREQ:50HZ , (CAPPRM:ASME , CAPPRM:MHLW) + FREQ:60HZ + MOVOL:460V) + CAPPRE:IEC , (MOVOL:230V , MOVOL:460V , MOVOL:575V) + CAPPRE:ULCUL + CAPPRM:ASME + FREQ:60HZ) + COOL:AIR **(21/08/2018 - 10/12/2018)** ((((CAPPRM:AS1210 , CAPPRM:CE , CAPPRM:MHLW , CAPPRM:MOM) + MOVOL:400V , (CAPPRM:CE + MOVOL:500V , CAPPRM:MHLW + MOVOL:200V) + COOL:AIR) + FREQ:50HZ , (CAPPRM:ASME , CAPPRM:MHLW) + FREQ:60HZ + MOVOL:460V) + CAPPRE:IEC , ((MOVOL:230V , MOVOL:575V) + COOL:AIR , MOVOL:460V) + CAPPRE:ULCUL + CAPPRM:ASME + FREQ:60HZ) **(11/12/2018 - 11/12/2018)** ((((CAPPRM:AS1210 , CAPPRM:CE , CAPPRM:MHLW , CAPPRM:MOM) + MOVOL:400V , (CAPPRM:CE + MOVOL:500V , CAPPRM:MHLW + MOVOL:200V) + COOL:AIR) + FREQ:50HZ , (CAPPRM:ASME , CAPPRM:MHLW) + COOL:WATER + FREQ:60HZ + MOVOL:460V) + CAPPRE:IEC , ((MOVOL:230V , MOVOL:575V) + COOL:AIR , MOVOL:460V) + CAPPRE:ULCUL + CAPPRM:ASME + FREQ:60HZ)	X152:1; 3

Legend:

CAPPRE:IEC - Component approval electrical:IEC
CAPPRM:ASME - Component approval mechanical:ASME
CAPPRM:MOM - Component approval mechanical:MOM
FREQ:50HZ - Frequency:50 Hz
MODEL:GA75VP_16 - Model:GA 75VSD+
MOVOL:400V - Supply voltage:400 V
MOVOL:575V - Supply voltage:575 V
CAPPRE:ULCUL - Component approval electrical:UL/cUL
CAPPRM:CE - Component approval mechanical:CE
COOL:AIR - Cooling:Air cooled
FREQ:60HZ - Frequency:60 Hz
MOVOL:200V - Supply voltage:200 V
MOVOL:460V - Supply voltage:460 V
CAPPRM:AS1210 - Component approval mechanical:AS1210
CAPPRM:MHLW - Component approval mechanical:MHLW
COOL:WATER - Cooling:Water cooled
IDRY:Y - Integrated dryer:Yes
MOVOL:230V - Supply voltage:230 V
MOVOL:500V - Supply voltage:500 V

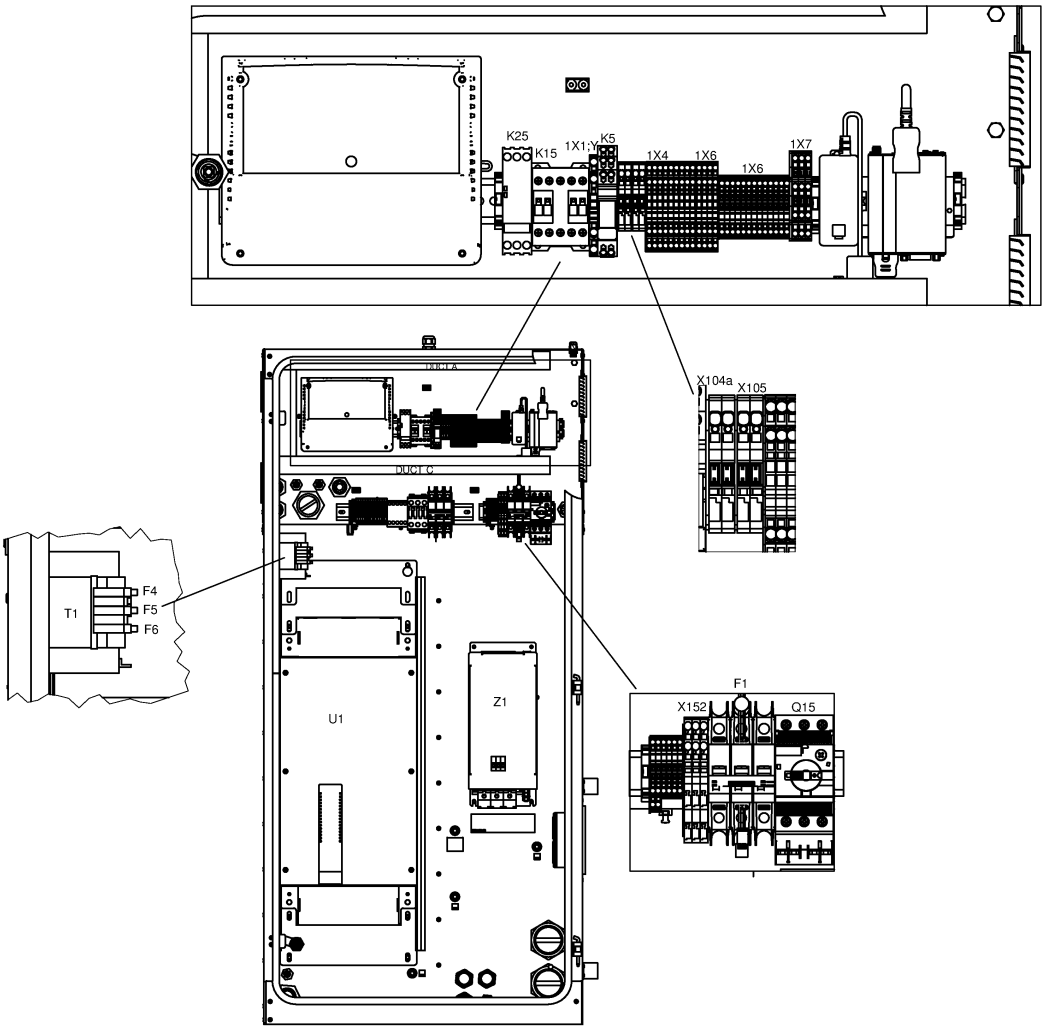
K25
K15
1X1:Y
K5
1X4
1X6
1X6
1X7
DUCT A
DUCT C
X104a
X105
T1
F4
F5
F6
U1
Z1
F1
X152
Q15

21.8 - Cubicle components GA 75L VSD+ - ((200V-400V-500V/50Hz, 460V/60Hz) - IEC, (230V-460V-575V/60Hz - UL-cUL)) - Full-Feature (28/08/2017 - 11/12/2018)

(((MOVOL:200V , MOVOL:400V , MOVOL:500V) + FREQ:50HZ , FREQ:60HZ + MOVOL:460V) + CAPPRE:IEC , (MOVOL:230V , MOVOL:460V , MOVOL:575V) + CAPPRE:ULCUL + FREQ:60HZ) + IDRY:Y + MODEL:GA75VP_16

Ref	Part Number	Qty	Name	Validity	EL
	~~1088 0031 81~~	7	END STOP BRACKET	**(28/08/2017 - 20/08/2018)** ((((CAPPRM:AS1210 , CAPPRM:CE , CAPPRM:MHLW , CAPPRM:MOM) + MOVOL:400V , CAPPRM:CE + MOVOL:500V , CAPPRM:MHLW + MOVOL:200V) + FREQ:50HZ , (CAPPRM:ASME , CAPPRM:MHLW) + FREQ:60HZ + MOVOL:460V) + CAPPRE:IEC , (MOVOL:230V , MOVOL:460V , MOVOL:575V) + CAPPRE:ULCUL + CAPPRM:ASME + FREQ:60HZ) + COOL:AIR **(21/08/2018 - 10/12/2018)** ((((CAPPRM:AS1210 , CAPPRM:CE , CAPPRM:MHLW , CAPPRM:MOM) + MOVOL:400V , (CAPPRM:CE + MOVOL:500V , CAPPRM:MHLW + MOVOL:200V) + COOL:AIR) + FREQ:50HZ , (CAPPRM:ASME , CAPPRM:MHLW) + FREQ:60HZ + MOVOL:460V) + CAPPRE:IEC , ((MOVOL:230V , MOVOL:575V) + COOL:AIR , MOVOL:460V) + CAPPRE:ULCUL + CAPPRM:ASME + FREQ:60HZ) **(11/12/2018 - 11/12/2018)** ((((CAPPRM:AS1210 , CAPPRM:CE , CAPPRM:MHLW , CAPPRM:MOM) + MOVOL:400V , (CAPPRM:CE + MOVOL:500V , CAPPRM:MHLW + MOVOL:200V) + COOL:AIR) + FREQ:50HZ , (CAPPRM:ASME , CAPPRM:MHLW) + COOL:WATER + FREQ:60HZ + MOVOL:460V) + CAPPRE:IEC , ((MOVOL:230V , MOVOL:575V) + COOL:AIR , MOVOL:460V) + CAPPRE:ULCUL + CAPPRM:ASME + FREQ:60HZ)	
	Electrical legend:	Connector/terminal rail			
	Substituted by:	1089 0577 82 - END RETAINER (quantity: 1)			
	1088 0039 38	2	TERMINAL	**(28/08/2017 - 20/08/2018)** ((((CAPPRM:AS1210 , CAPPRM:CE , CAPPRM:MHLW , CAPPRM:MOM) + MOVOL:400V , CAPPRM:CE + MOVOL:500V , CAPPRM:MHLW + MOVOL:200V) + FREQ:50HZ , (CAPPRM:ASME , CAPPRM:MHLW) + FREQ:60HZ + MOVOL:460V) + CAPPRE:IEC , (MOVOL:230V , MOVOL:460V , MOVOL:575V) + CAPPRE:ULCUL + CAPPRM:ASME + FREQ:60HZ) + COOL:AIR **(21/08/2018 - 10/12/2018)** ((((CAPPRM:AS1210 , CAPPRM:CE , CAPPRM:MHLW , CAPPRM:MOM) + MOVOL:400V , (CAPPRM:CE + MOVOL:500V , CAPPRM:MHLW + MOVOL:200V) + COOL:AIR) + FREQ:50HZ , (CAPPRM:ASME , CAPPRM:MHLW) + FREQ:60HZ + MOVOL:460V) + CAPPRE:IEC , ((MOVOL:230V , MOVOL:575V) + COOL:AIR , MOVOL:460V) + CAPPRE:ULCUL + CAPPRM:ASME + FREQ:60HZ) **(11/12/2018 - 11/12/2018)** ((((CAPPRM:AS1210 , CAPPRM:CE , CAPPRM:MHLW , CAPPRM:MOM) + MOVOL:400V , (CAPPRM:CE + MOVOL:500V , CAPPRM:MHLW + MOVOL:200V) + COOL:AIR) + FREQ:50HZ , (CAPPRM:ASME , CAPPRM:MHLW) + COOL:WATER + FREQ:60HZ + MOVOL:460V) + CAPPRE:IEC , ((MOVOL:230V , MOVOL:575V) + COOL:AIR , MOVOL:460V) + CAPPRE:ULCUL + CAPPRM:ASME + FREQ:60HZ)	1X11:2,5

Legend:

CAPPRE:IEC - Component approval electrical:IEC
CAPPRM:ASME - Component approval mechanical:ASME
CAPPRM:MOM - Component approval mechanical:MOM
FREQ:50HZ - Frequency:50 Hz
MODEL:GA75VP_16 - Model:GA 75VSD+
MOVOL:400V - Supply voltage:400 V
MOVOL:575V - Supply voltage:575 V
CAPPRE:ULCUL - Component approval electrical:UL/cUL
CAPPRM:CE - Component approval mechanical:CE
COOL:AIR - Cooling:Air cooled
FREQ:60HZ - Frequency:60 Hz
MOVOL:200V - Supply voltage:200 V
MOVOL:460V - Supply voltage:460 V
CAPPRM:AS1210 - Component approval mechanical:AS1210
CAPPRM:MHLW - Component approval mechanical:MHLW
COOL:WATER - Cooling:Water cooled
IDRY:Y - Integrated dryer:Yes
MOVOL:230V - Supply voltage:230 V
MOVOL:500V - Supply voltage:500 V

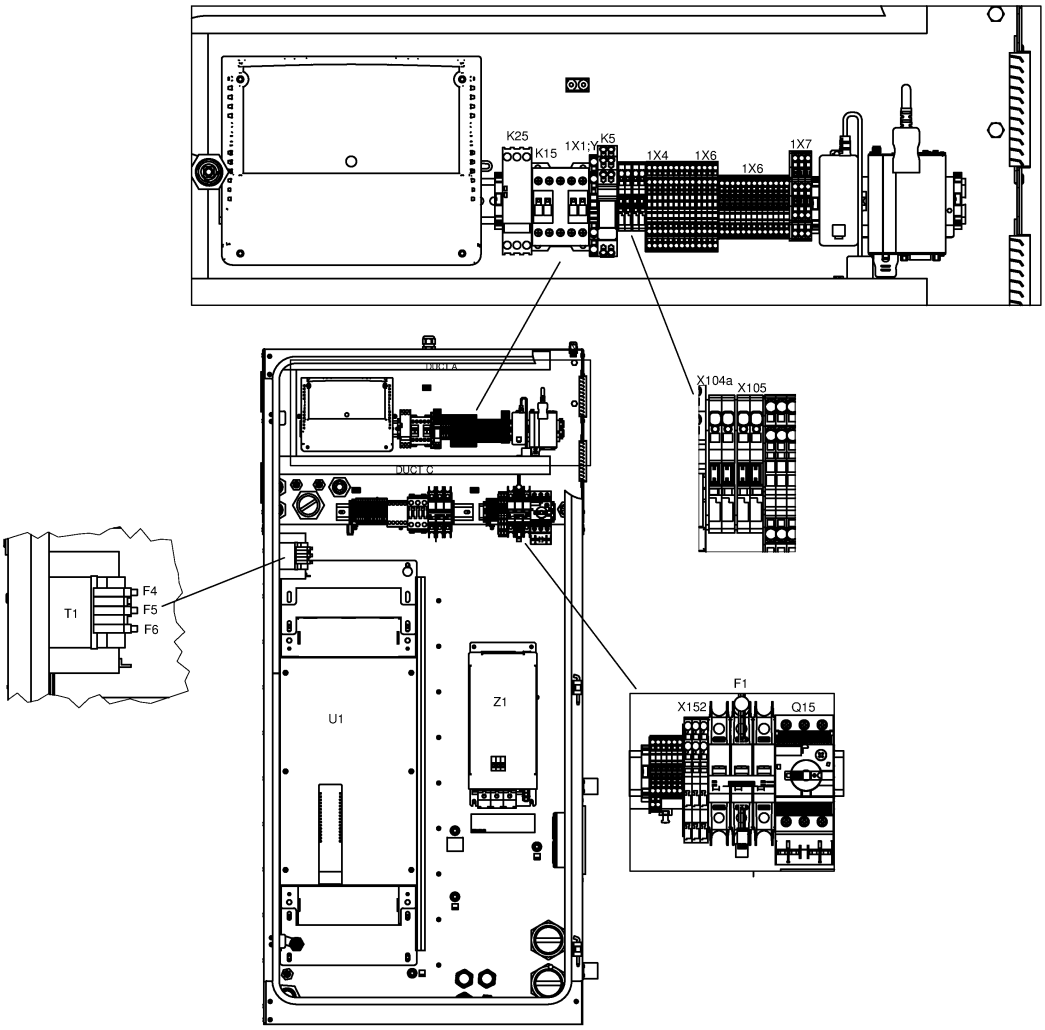
K25
K15
1X1:Y
K5
1X4
1X6
1X6
1X7
DUCT A
DUCT C
X104a
X105
T1
F4
F5
F6
U1
Z1
F1
X152
Q15

21.8 - Cubicle components GA 75L VSD+ - ((200V-400V-500V/50Hz, 460V/60Hz) - IEC, (230V-460V-575V/60Hz - UL-cUL)) - Full-Feature (28/08/2017 - 11/12/2018)

(((MOVOL:200V , MOVOL:400V , MOVOL:500V) + FREQ:50HZ , FREQ:60HZ + MOVOL:460V) + CAPPRE:IEC , (MOVOL:230V , MOVOL:460V , MOVOL:575V) + CAPPRE:ULCUL + FREQ:60HZ) + IDRY:Y + MODEL:GA75VP_16

Ref	Part Number	Qty	Name	Validity	EL
	1088 0039 40	1	PLATE	**(28/08/2017 - 20/08/2018)** ((((CAPPRM:AS1210 , CAPPRM:CE , CAPPRM:MHLW , CAPPRM:MOM) + MOVOL:400V , CAPPRM:CE + MOVOL:500V , CAPPRM:MHLW + MOVOL:200V) + FREQ:50HZ , (CAPPRM:ASME , CAPPRM:MHLW) + FREQ:60HZ + MOVOL:460V) + CAPPRE:IEC , (MOVOL:230V , MOVOL:460V , MOVOL:575V) + CAPPRE:ULCUL + CAPPRM:ASME + FREQ:60HZ) + COOL:AIR **(21/08/2018 - 10/12/2018)** ((((CAPPRM:AS1210 , CAPPRM:CE , CAPPRM:MHLW , CAPPRM:MOM) + MOVOL:400V , (CAPPRM:CE + MOVOL:500V , CAPPRM:MHLW + MOVOL:200V) + COOL:AIR) + FREQ:50HZ , (CAPPRM:ASME , CAPPRM:MHLW) + FREQ:60HZ + MOVOL:460V) + CAPPRE:IEC , ((MOVOL:230V , MOVOL:575V) + COOL:AIR , MOVOL:460V) + CAPPRE:ULCUL + CAPPRM:ASME + FREQ:60HZ) **(11/12/2018 - 11/12/2018)** ((((CAPPRM:AS1210 , CAPPRM:CE , CAPPRM:MHLW , CAPPRM:MOM) + MOVOL:400V , (CAPPRM:CE + MOVOL:500V , CAPPRM:MHLW + MOVOL:200V) + COOL:AIR) + FREQ:50HZ , (CAPPRM:ASME , CAPPRM:MHLW) + COOL:WATER + FREQ:60HZ + MOVOL:460V) + CAPPRE:IEC , ((MOVOL:230V , MOVOL:575V) + COOL:AIR , MOVOL:460V) + CAPPRE:ULCUL + CAPPRM:ASME + FREQ:60HZ)	1X11
	1088 0039 34	4	TERMINAL	**(28/08/2017 - 20/08/2018)** ((((CAPPRM:AS1210 , CAPPRM:CE , CAPPRM:MHLW , CAPPRM:MOM) + MOVOL:400V , CAPPRM:CE + MOVOL:500V , CAPPRM:MHLW + MOVOL:200V) + FREQ:50HZ , (CAPPRM:ASME , CAPPRM:MHLW) + FREQ:60HZ + MOVOL:460V) + CAPPRE:IEC , (MOVOL:230V , MOVOL:460V , MOVOL:575V) + CAPPRE:ULCUL + CAPPRM:ASME + FREQ:60HZ) + COOL:AIR **(21/08/2018 - 10/12/2018)** ((((CAPPRM:AS1210 , CAPPRM:CE , CAPPRM:MHLW , CAPPRM:MOM) + MOVOL:400V , (CAPPRM:CE + MOVOL:500V , CAPPRM:MHLW + MOVOL:200V) + COOL:AIR) + FREQ:50HZ , (CAPPRM:ASME , CAPPRM:MHLW) + FREQ:60HZ + MOVOL:460V) + CAPPRE:IEC , ((MOVOL:230V , MOVOL:575V) + COOL:AIR , MOVOL:460V) + CAPPRE:ULCUL + CAPPRM:ASME + FREQ:60HZ) **(11/12/2018 - 11/12/2018)** ((((CAPPRM:AS1210 , CAPPRM:CE , CAPPRM:MHLW , CAPPRM:MOM) + MOVOL:400V , (CAPPRM:CE + MOVOL:500V , CAPPRM:MHLW + MOVOL:200V) + COOL:AIR) + FREQ:50HZ , (CAPPRM:ASME , CAPPRM:MHLW) + COOL:WATER + FREQ:60HZ + MOVOL:460V) + CAPPRE:IEC , ((MOVOL:230V , MOVOL:575V) + COOL:AIR , MOVOL:460V) + CAPPRE:ULCUL + CAPPRM:ASME + FREQ:60HZ)	
	Electrical legend:	1X11:30,301,34			

Legend:

CAPPRE:IEC - Component approval electrical:IEC
CAPPRM:ASME - Component approval mechanical:ASME
CAPPRM:MOM - Component approval mechanical:MOM
FREQ:50HZ - Frequency:50 Hz
MODEL:GA75VP_16 - Model:GA 75VSD+
MOVOL:400V - Supply voltage:400 V
MOVOL:575V - Supply voltage:575 V
CAPPRE:ULCUL - Component approval electrical:UL/cUL
CAPPRM:CE - Component approval mechanical:CE
COOL:AIR - Cooling:Air cooled
FREQ:60HZ - Frequency:60 Hz
MOVOL:200V - Supply voltage:200 V
MOVOL:460V - Supply voltage:460 V
CAPPRM:AS1210 - Component approval mechanical:AS1210
CAPPRM:MHLW - Component approval mechanical:MHLW
COOL:WATER - Cooling:Water cooled
IDRY:Y - Integrated dryer:Yes
MOVOL:230V - Supply voltage:230 V
MOVOL:500V - Supply voltage:500 V

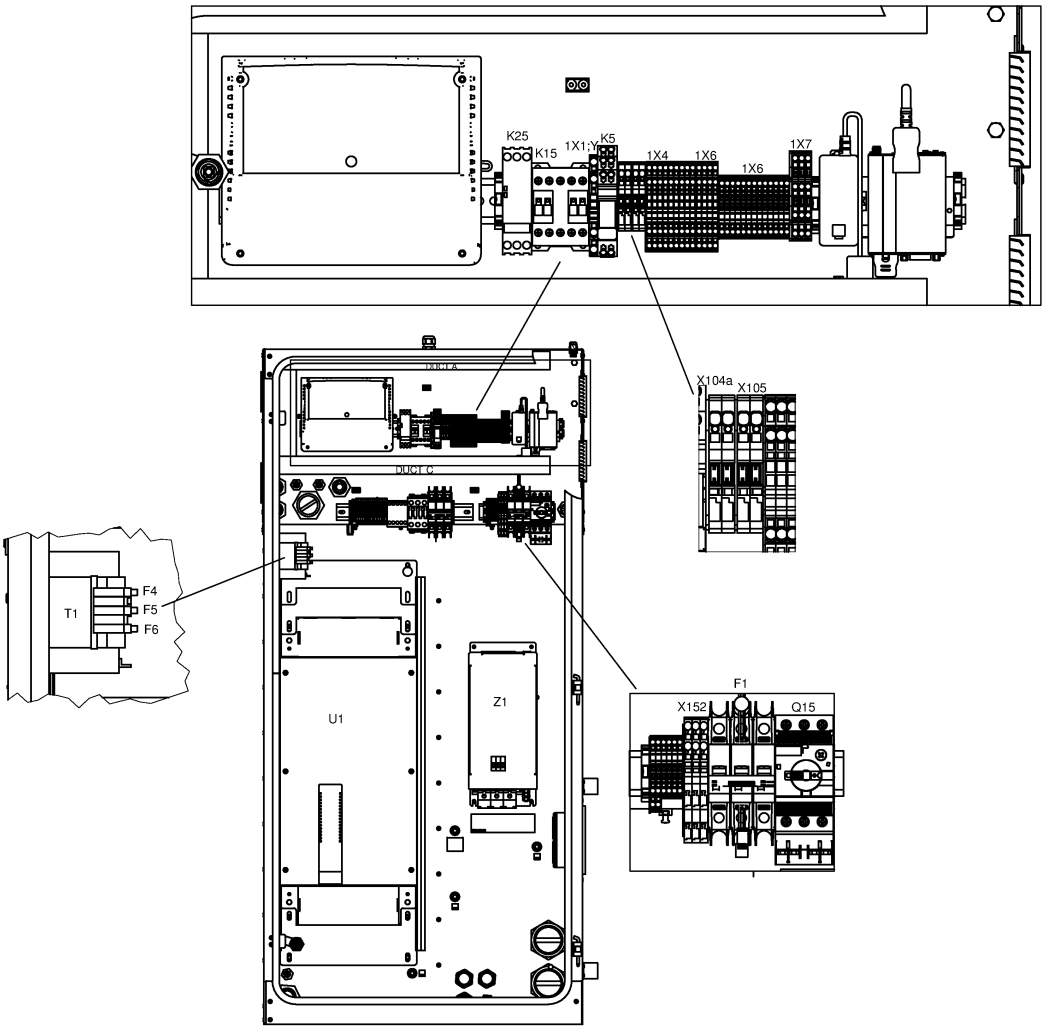
K25
K15
1X1:Y
K5
1X4
1X6
1X6
1X7
DUCT A
DUCT C
X104a
X105
T1
F4
F5
F6
U1
Z1
F1
X152
Q15

21.8 - Cubicle components GA 75L VSD+ - ((200V-400V-500V/50Hz, 460V/60Hz) - IEC, (230V-460V-575V/60Hz - UL-cUL)) - Full-Feature (28/08/2017 - 11/12/2018)

(((MOVOL:200V , MOVOL:400V , MOVOL:500V) + FREQ:50HZ , FREQ:60HZ + MOVOL:460V) + CAPPRE:IEC , (MOVOL:230V , MOVOL:460V , MOVOL:575V) + CAPPRE:ULCUL + FREQ:60HZ) + IDRY:Y + MODEL:GA75VP_16

Ref	Part Number	Qty	Name	Validity	EL
	1088 0039 35	1	PLATE	**(28/08/2017 - 20/08/2018)** ((((CAPPRM:AS1210 , CAPPRM:CE , CAPPRM:MHLW , CAPPRM:MOM) + MOVOL:400V , CAPPRM:CE + MOVOL:500V , CAPPRM:MHLW + MOVOL:200V) + FREQ:50HZ , (CAPPRM:ASME , CAPPRM:MHLW) + FREQ:60HZ + MOVOL:460V) + CAPPRE:IEC , (MOVOL:230V , MOVOL:460V , MOVOL:575V) + CAPPRE:ULCUL + CAPPRM:ASME + FREQ:60HZ) + COOL:AIR **(21/08/2018 - 10/12/2018)** ((((CAPPRM:AS1210 , CAPPRM:CE , CAPPRM:MHLW , CAPPRM:MOM) + MOVOL:400V , (CAPPRM:CE + MOVOL:500V , CAPPRM:MHLW + MOVOL:200V) + COOL:AIR) + FREQ:50HZ , (CAPPRM:ASME , CAPPRM:MHLW) + FREQ:60HZ + MOVOL:460V) + CAPPRE:IEC , ((MOVOL:230V , MOVOL:575V) + COOL:AIR , MOVOL:460V) + CAPPRE:ULCUL + CAPPRM:ASME + FREQ:60HZ) **(11/12/2018 - 11/12/2018)** ((((CAPPRM:AS1210 , CAPPRM:CE , CAPPRM:MHLW , CAPPRM:MOM) + MOVOL:400V , (CAPPRM:CE + MOVOL:500V , CAPPRM:MHLW + MOVOL:200V) + COOL:AIR) + FREQ:50HZ , (CAPPRM:ASME , CAPPRM:MHLW) + COOL:WATER + FREQ:60HZ + MOVOL:460V) + CAPPRE:IEC , ((MOVOL:230V , MOVOL:575V) + COOL:AIR , MOVOL:460V) + CAPPRE:ULCUL + CAPPRM:ASME + FREQ:60HZ)	1X11
	1088 0039 04	2	TERMINAL	**(28/08/2017 - 20/08/2018)** ((((CAPPRM:AS1210 , CAPPRM:CE , CAPPRM:MHLW , CAPPRM:MOM) + MOVOL:400V , CAPPRM:CE + MOVOL:500V , CAPPRM:MHLW + MOVOL:200V) + FREQ:50HZ , (CAPPRM:ASME , CAPPRM:MHLW) + FREQ:60HZ + MOVOL:460V) + CAPPRE:IEC , (MOVOL:230V , MOVOL:460V , MOVOL:575V) + CAPPRE:ULCUL + CAPPRM:ASME + FREQ:60HZ) + COOL:AIR **(21/08/2018 - 10/12/2018)** ((((CAPPRM:AS1210 , CAPPRM:CE , CAPPRM:MHLW , CAPPRM:MOM) + MOVOL:400V , (CAPPRM:CE + MOVOL:500V , CAPPRM:MHLW + MOVOL:200V) + COOL:AIR) + FREQ:50HZ , (CAPPRM:ASME , CAPPRM:MHLW) + FREQ:60HZ + MOVOL:460V) + CAPPRE:IEC , ((MOVOL:230V , MOVOL:575V) + COOL:AIR , MOVOL:460V) + CAPPRE:ULCUL + CAPPRM:ASME + FREQ:60HZ) **(11/12/2018 - 11/12/2018)** ((((CAPPRM:AS1210 , CAPPRM:CE , CAPPRM:MHLW , CAPPRM:MOM) + MOVOL:400V , (CAPPRM:CE + MOVOL:500V , CAPPRM:MHLW + MOVOL:200V) + COOL:AIR) + FREQ:50HZ , (CAPPRM:ASME , CAPPRM:MHLW) + COOL:WATER + FREQ:60HZ + MOVOL:460V) + CAPPRE:IEC , ((MOVOL:230V , MOVOL:575V) + COOL:AIR , MOVOL:460V) + CAPPRE:ULCUL + CAPPRM:ASME + FREQ:60HZ)	X104a

Legend:

CAPPRE:IEC - Component approval electrical:IEC
CAPPRM:ASME - Component approval mechanical:ASME
CAPPRM:MOM - Component approval mechanical:MOM
FREQ:50HZ - Frequency:50 Hz
MODEL:GA75VP_16 - Model:GA 75VSD+
MOVOL:400V - Supply voltage:400 V
MOVOL:575V - Supply voltage:575 V
CAPPRE:ULCUL - Component approval electrical:UL/cUL
CAPPRM:CE - Component approval mechanical:CE
COOL:AIR - Cooling:Air cooled
FREQ:60HZ - Frequency:60 Hz
MOVOL:200V - Supply voltage:200 V
MOVOL:460V - Supply voltage:460 V
CAPPRM:AS1210 - Component approval mechanical:AS1210
CAPPRM:MHLW - Component approval mechanical:MHLW
COOL:WATER - Cooling:Water cooled
IDRY:Y - Integrated dryer:Yes
MOVOL:230V - Supply voltage:230 V
MOVOL:500V - Supply voltage:500 V

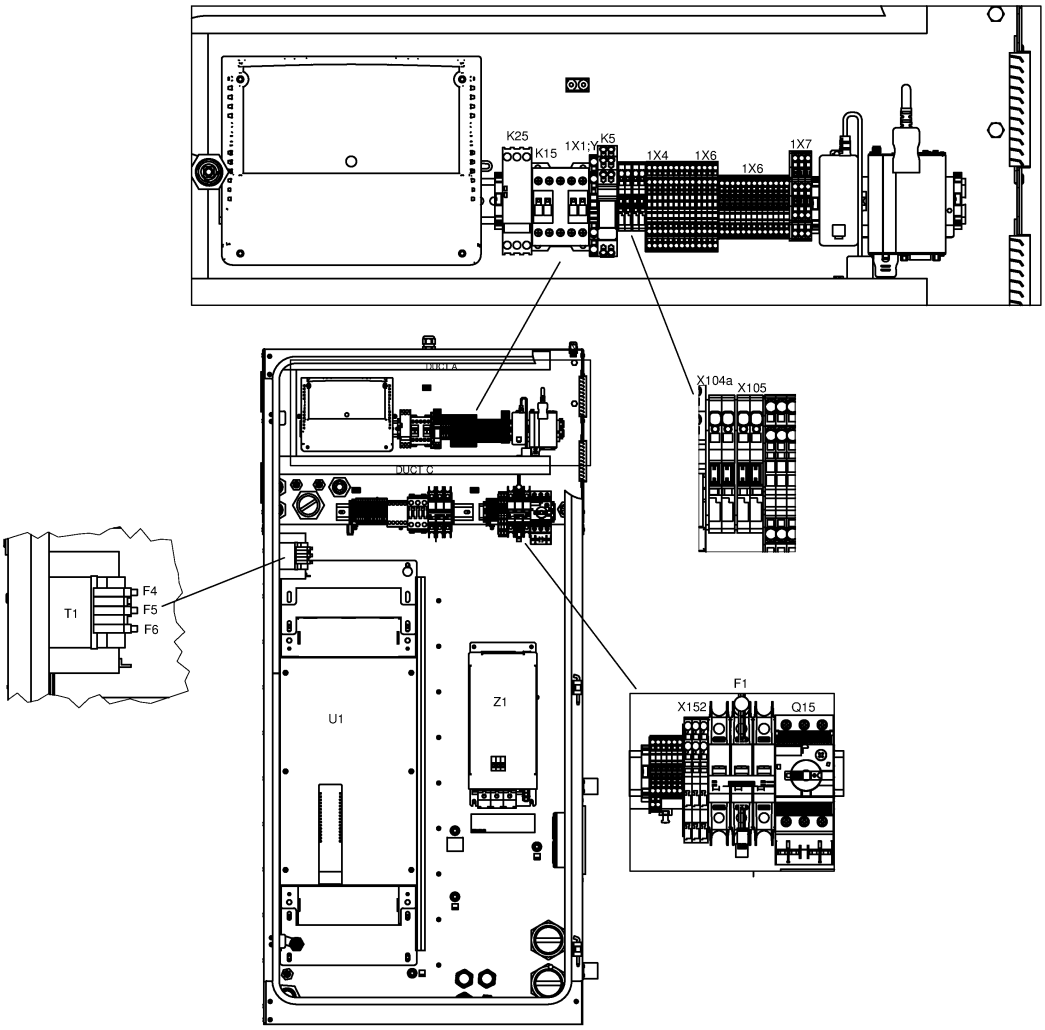
K25
K15
1X1:Y
K5
1X4
1X6
1X6
1X7
DUCT A
DUCT C
X104a
X105
T1
F4
F5
F6
U1
Z1
F1
X152
Q15

21.8 - Cubicle components GA 75L VSD+ - ((200V-400V-500V/50Hz, 460V/60Hz) - IEC, (230V-460V-575V/60Hz - UL-cUL)) - Full-Feature (28/08/2017 - 11/12/2018)

(((MOVOL:200V , MOVOL:400V , MOVOL:500V) + FREQ:50HZ , FREQ:60HZ + MOVOL:460V) + CAPPRE:IEC , (MOVOL:230V , MOVOL:460V , MOVOL:575V) + CAPPRE:ULCUL + FREQ:60HZ) + IDRY:Y + MODEL:GA75VP_16

Ref	Part Number	Qty	Name	Validity	EL
	1088 0037 99	2	PIN	**(28/08/2017 - 20/08/2018)** ((((CAPPRM:AS1210 , CAPPRM:CE , CAPPRM:MHLW , CAPPRM:MOM) + MOVOL:400V , CAPPRM:CE + MOVOL:500V , CAPPRM:MHLW + MOVOL:200V) + FREQ:50HZ , (CAPPRM:ASME , CAPPRM:MHLW) + FREQ:60HZ + MOVOL:460V) + CAPPRE:IEC , (MOVOL:230V , MOVOL:460V , MOVOL:575V) + CAPPRE:ULCUL + CAPPRM:ASME + FREQ:60HZ) + COOL:AIR **(21/08/2018 - 10/12/2018)** ((((CAPPRM:AS1210 , CAPPRM:CE , CAPPRM:MHLW , CAPPRM:MOM) + MOVOL:400V , (CAPPRM:CE + MOVOL:500V , CAPPRM:MHLW + MOVOL:200V) + COOL:AIR) + FREQ:50HZ , (CAPPRM:ASME , CAPPRM:MHLW) + FREQ:60HZ + MOVOL:460V) + CAPPRE:IEC , ((MOVOL:230V , MOVOL:575V) + COOL:AIR , MOVOL:460V) + CAPPRE:ULCUL + CAPPRM:ASME + FREQ:60HZ) **(11/12/2018 - 11/12/2018)** ((((CAPPRM:AS1210 , CAPPRM:CE , CAPPRM:MHLW , CAPPRM:MOM) + MOVOL:400V , (CAPPRM:CE + MOVOL:500V , CAPPRM:MHLW + MOVOL:200V) + COOL:AIR) + FREQ:50HZ , (CAPPRM:ASME , CAPPRM:MHLW) + COOL:WATER + FREQ:60HZ + MOVOL:460V) + CAPPRE:IEC , ((MOVOL:230V , MOVOL:575V) + COOL:AIR , MOVOL:460V) + CAPPRE:ULCUL + CAPPRM:ASME + FREQ:60HZ)	X104a/X105
	1088 0039 02	1	PLATE	**(28/08/2017 - 20/08/2018)** ((((CAPPRM:AS1210 , CAPPRM:CE , CAPPRM:MHLW , CAPPRM:MOM) + MOVOL:400V , CAPPRM:CE + MOVOL:500V , CAPPRM:MHLW + MOVOL:200V) + FREQ:50HZ , (CAPPRM:ASME , CAPPRM:MHLW) + FREQ:60HZ + MOVOL:460V) + CAPPRE:IEC , (MOVOL:230V , MOVOL:460V , MOVOL:575V) + CAPPRE:ULCUL + CAPPRM:ASME + FREQ:60HZ) + COOL:AIR **(21/08/2018 - 10/12/2018)** ((((CAPPRM:AS1210 , CAPPRM:CE , CAPPRM:MHLW , CAPPRM:MOM) + MOVOL:400V , (CAPPRM:CE + MOVOL:500V , CAPPRM:MHLW + MOVOL:200V) + COOL:AIR) + FREQ:50HZ , (CAPPRM:ASME , CAPPRM:MHLW) + FREQ:60HZ + MOVOL:460V) + CAPPRE:IEC , ((MOVOL:230V , MOVOL:575V) + COOL:AIR , MOVOL:460V) + CAPPRE:ULCUL + CAPPRM:ASME + FREQ:60HZ) **(11/12/2018 - 11/12/2018)** ((((CAPPRM:AS1210 , CAPPRM:CE , CAPPRM:MHLW , CAPPRM:MOM) + MOVOL:400V , (CAPPRM:CE + MOVOL:500V , CAPPRM:MHLW + MOVOL:200V) + COOL:AIR) + FREQ:50HZ , (CAPPRM:ASME , CAPPRM:MHLW) + COOL:WATER + FREQ:60HZ + MOVOL:460V) + CAPPRE:IEC , ((MOVOL:230V , MOVOL:575V) + COOL:AIR , MOVOL:460V) + CAPPRE:ULCUL + CAPPRM:ASME + FREQ:60HZ)	X104a

Legend:

CAPPRE:IEC - Component approval electrical:IEC
CAPPRM:ASME - Component approval mechanical:ASME
CAPPRM:MOM - Component approval mechanical:MOM
FREQ:50HZ - Frequency:50 Hz
MODEL:GA75VP_16 - Model:GA 75VSD+
MOVOL:400V - Supply voltage:400 V
MOVOL:575V - Supply voltage:575 V
CAPPRE:ULCUL - Component approval electrical:UL/cUL
CAPPRM:CE - Component approval mechanical:CE
COOL:AIR - Cooling:Air cooled
FREQ:60HZ - Frequency:60 Hz
MOVOL:200V - Supply voltage:200 V
MOVOL:460V - Supply voltage:460 V
CAPPRM:AS1210 - Component approval mechanical:AS1210
CAPPRM:MHLW - Component approval mechanical:MHLW
COOL:WATER - Cooling:Water cooled
IDRY:Y - Integrated dryer:Yes
MOVOL:230V - Supply voltage:230 V
MOVOL:500V - Supply voltage:500 V

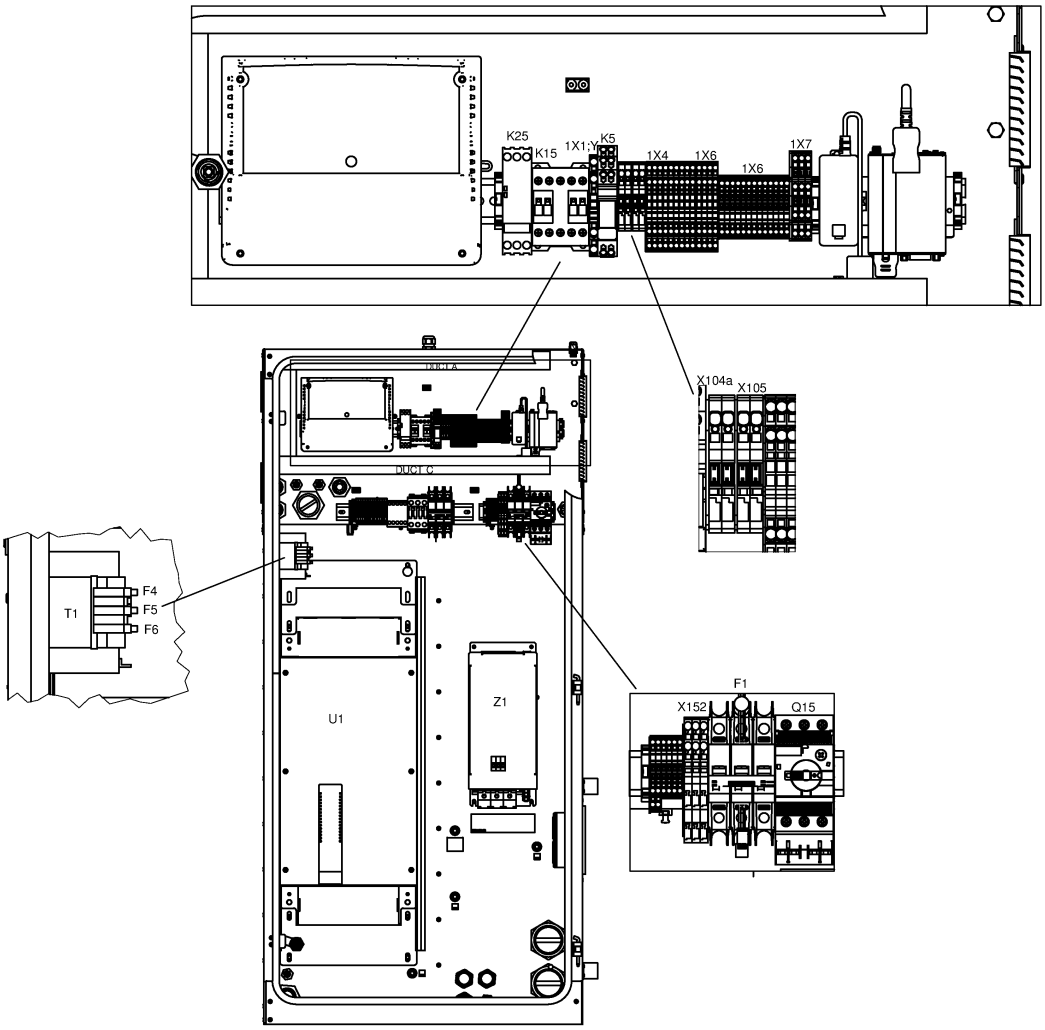
K25
K15
1X1:Y
K5
1X4
1X6
1X6
1X7
DUCT A
DUCT C
X104a
X105
T1
F4
F5
F6
U1
Z1
F1
X152
Q15

Ref	Part Number	Qty	Name	Validity	EL
	1088 0039 04	2	TERMINAL	**(28/08/2017 - 20/08/2018)** ((((CAPPRM:AS1210 , CAPPRM:CE , CAPPRM:MHLW , CAPPRM:MOM) + MOVOL:400V , CAPPRM:CE + MOVOL:500V , CAPPRM:MHLW + MOVOL:200V) + FREQ:50HZ , (CAPPRM:ASME , CAPPRM:MHLW) + FREQ:60HZ + MOVOL:460V) + CAPPRE:IEC , (MOVOL:230V , MOVOL:460V , MOVOL:575V) + CAPPRE:ULCUL + CAPPRM:ASME + FREQ:60HZ) + COOL:AIR **(21/08/2018 - 10/12/2018)** ((((CAPPRM:AS1210 , CAPPRM:CE , CAPPRM:MHLW , CAPPRM:MOM) + MOVOL:400V , (CAPPRM:CE + MOVOL:500V , CAPPRM:MHLW + MOVOL:200V) + COOL:AIR) + FREQ:50HZ , (CAPPRM:ASME , CAPPRM:MHLW) + FREQ:60HZ + MOVOL:460V) + CAPPRE:IEC , ((MOVOL:230V , MOVOL:575V) + COOL:AIR , MOVOL:460V) + CAPPRE:ULCUL + CAPPRM:ASME + FREQ:60HZ) **(11/12/2018 - 11/12/2018)** ((((CAPPRM:AS1210 , CAPPRM:CE , CAPPRM:MHLW , CAPPRM:MOM) + MOVOL:400V , (CAPPRM:CE + MOVOL:500V , CAPPRM:MHLW + MOVOL:200V) + COOL:AIR) + FREQ:50HZ , (CAPPRM:ASME , CAPPRM:MHLW) + COOL:WATER + FREQ:60HZ + MOVOL:460V) + CAPPRE:IEC , ((MOVOL:230V , MOVOL:575V) + COOL:AIR , MOVOL:460V) + CAPPRE:ULCUL + CAPPRM:ASME + FREQ:60HZ)	
	1088 0039 02	1	PLATE	**(28/08/2017 - 20/08/2018)** ((((CAPPRM:AS1210 , CAPPRM:CE , CAPPRM:MHLW , CAPPRM:MOM) + MOVOL:400V , CAPPRM:CE + MOVOL:500V , CAPPRM:MHLW + MOVOL:200V) + FREQ:50HZ , (CAPPRM:ASME , CAPPRM:MHLW) + FREQ:60HZ + MOVOL:460V) + CAPPRE:IEC , (MOVOL:230V , MOVOL:460V , MOVOL:575V) + CAPPRE:ULCUL + CAPPRM:ASME + FREQ:60HZ) + COOL:AIR **(21/08/2018 - 10/12/2018)** ((((CAPPRM:AS1210 , CAPPRM:CE , CAPPRM:MHLW , CAPPRM:MOM) + MOVOL:400V , (CAPPRM:CE + MOVOL:500V , CAPPRM:MHLW + MOVOL:200V) + COOL:AIR) + FREQ:50HZ , (CAPPRM:ASME , CAPPRM:MHLW) + FREQ:60HZ + MOVOL:460V) + CAPPRE:IEC , ((MOVOL:230V , MOVOL:575V) + COOL:AIR , MOVOL:460V) + CAPPRE:ULCUL + CAPPRM:ASME + FREQ:60HZ) **(11/12/2018 - 11/12/2018)** ((((CAPPRM:AS1210 , CAPPRM:CE , CAPPRM:MHLW , CAPPRM:MOM) + MOVOL:400V , (CAPPRM:CE + MOVOL:500V , CAPPRM:MHLW + MOVOL:200V) + COOL:AIR) + FREQ:50HZ , (CAPPRM:ASME , CAPPRM:MHLW) + COOL:WATER + FREQ:60HZ + MOVOL:460V) + CAPPRE:IEC , ((MOVOL:230V , MOVOL:575V) + COOL:AIR , MOVOL:460V) + CAPPRE:ULCUL + CAPPRM:ASME + FREQ:60HZ)	

Legend:

CAPPRE:IEC - Component approval electrical:IEC
CAPPRM:ASME - Component approval mechanical:ASME
CAPPRM:MOM - Component approval mechanical:MOM
FREQ:50HZ - Frequency:50 Hz
MODEL:GA75VP_16 - Model:GA 75VSD+
MOVOL:400V - Supply voltage:400 V
MOVOL:575V - Supply voltage:575 V
CAPPRE:ULCUL - Component approval electrical:UL/cUL
CAPPRM:CE - Component approval mechanical:CE
COOL:AIR - Cooling:Air cooled
FREQ:60HZ - Frequency:60 Hz
MOVOL:200V - Supply voltage:200 V
MOVOL:460V - Supply voltage:460 V
CAPPRM:AS1210 - Component approval mechanical:AS1210
CAPPRM:MHLW - Component approval mechanical:MHLW
COOL:WATER - Cooling:Water cooled
IDRY:Y - Integrated dryer:Yes
MOVOL:230V - Supply voltage:230 V
MOVOL:500V - Supply voltage:500 V

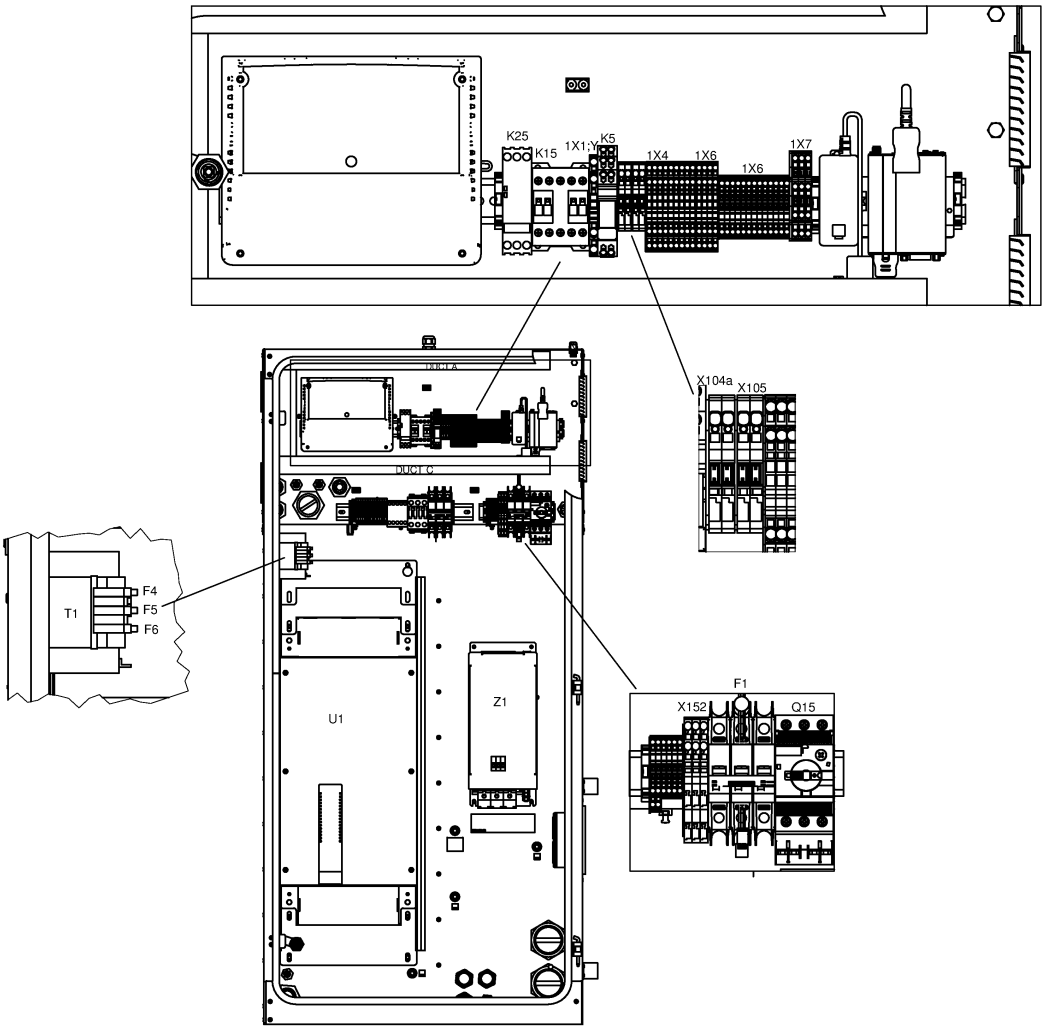
K25
K15
1X1:Y
K5
1X4
1X6
1X6
1X7
DUCT A
DUCT C
X104a
X105
T1
F4
F5
F6
U1
Z1
F1
X152
Q15

Ref	Part Number	Qty	Name	Validity	EL
	1088 0039 34	13	TERMINAL	**(28/08/2017 - 20/08/2018)** ((((CAPPRM:AS1210 , CAPPRM:CE , CAPPRM:MHLW , CAPPRM:MOM) + MOVOL:400V , CAPPRM:CE + MOVOL:500V , CAPPRM:MHLW + MOVOL:200V) + FREQ:50HZ , (CAPPRM:ASME , CAPPRM:MHLW) + FREQ:60HZ + MOVOL:460V) + CAPPRE:IEC , (MOVOL:230V , MOVOL:460V , MOVOL:575V) + CAPPRE:ULCUL + CAPPRM:ASME + FREQ:60HZ) + COOL:AIR **(21/08/2018 - 10/12/2018)** ((((CAPPRM:AS1210 , CAPPRM:CE , CAPPRM:MHLW , CAPPRM:MOM) + MOVOL:400V , (CAPPRM:CE + MOVOL:500V , CAPPRM:MHLW + MOVOL:200V) + COOL:AIR) + FREQ:50HZ , (CAPPRM:ASME , CAPPRM:MHLW) + FREQ:60HZ + MOVOL:460V) + CAPPRE:IEC , ((MOVOL:230V , MOVOL:575V) + COOL:AIR , MOVOL:460V) + CAPPRE:ULCUL + CAPPRM:ASME + FREQ:60HZ) **(11/12/2018 - 11/12/2018)** ((((CAPPRM:AS1210 , CAPPRM:CE , CAPPRM:MHLW , CAPPRM:MOM) + MOVOL:400V , (CAPPRM:CE + MOVOL:500V , CAPPRM:MHLW + MOVOL:200V) + COOL:AIR) + FREQ:50HZ , (CAPPRM:ASME , CAPPRM:MHLW) + COOL:WATER + FREQ:60HZ + MOVOL:460V) + CAPPRE:IEC , ((MOVOL:230V , MOVOL:575V) + COOL:AIR , MOVOL:460V) + CAPPRE:ULCUL + CAPPRM:ASME + FREQ:60HZ)	1X6
	1088 0037 69	3	CONNECTOR	**(28/08/2017 - 20/08/2018)** ((((CAPPRM:AS1210 , CAPPRM:CE , CAPPRM:MHLW , CAPPRM:MOM) + MOVOL:400V , CAPPRM:CE + MOVOL:500V , CAPPRM:MHLW + MOVOL:200V) + FREQ:50HZ , (CAPPRM:ASME , CAPPRM:MHLW) + FREQ:60HZ + MOVOL:460V) + CAPPRE:IEC , (MOVOL:230V , MOVOL:460V , MOVOL:575V) + CAPPRE:ULCUL + CAPPRM:ASME + FREQ:60HZ) + COOL:AIR **(21/08/2018 - 10/12/2018)** ((((CAPPRM:AS1210 , CAPPRM:CE , CAPPRM:MHLW , CAPPRM:MOM) + MOVOL:400V , (CAPPRM:CE + MOVOL:500V , CAPPRM:MHLW + MOVOL:200V) + COOL:AIR) + FREQ:50HZ , (CAPPRM:ASME , CAPPRM:MHLW) + FREQ:60HZ + MOVOL:460V) + CAPPRE:IEC , ((MOVOL:230V , MOVOL:575V) + COOL:AIR , MOVOL:460V) + CAPPRE:ULCUL + CAPPRM:ASME + FREQ:60HZ) **(11/12/2018 - 11/12/2018)** ((((CAPPRM:AS1210 , CAPPRM:CE , CAPPRM:MHLW , CAPPRM:MOM) + MOVOL:400V , (CAPPRM:CE + MOVOL:500V , CAPPRM:MHLW + MOVOL:200V) + COOL:AIR) + FREQ:50HZ , (CAPPRM:ASME , CAPPRM:MHLW) + COOL:WATER + FREQ:60HZ + MOVOL:460V) + CAPPRE:IEC , ((MOVOL:230V , MOVOL:575V) + COOL:AIR , MOVOL:460V) + CAPPRE:ULCUL + CAPPRM:ASME + FREQ:60HZ)	1X7

Legend:

CAPPRE:IEC - Component approval electrical:IEC
CAPPRM:ASME - Component approval mechanical:ASME
CAPPRM:MOM - Component approval mechanical:MOM
FREQ:50HZ - Frequency:50 Hz
MODEL:GA75VP_16 - Model:GA 75VSD+
MOVOL:400V - Supply voltage:400 V
MOVOL:575V - Supply voltage:575 V
CAPPRE:ULCUL - Component approval electrical:UL/cUL
CAPPRM:CE - Component approval mechanical:CE
COOL:AIR - Cooling:Air cooled
FREQ:60HZ - Frequency:60 Hz
MOVOL:200V - Supply voltage:200 V
MOVOL:460V - Supply voltage:460 V
CAPPRM:AS1210 - Component approval mechanical:AS1210
CAPPRM:MHLW - Component approval mechanical:MHLW
COOL:WATER - Cooling:Water cooled
IDRY:Y - Integrated dryer:Yes
MOVOL:230V - Supply voltage:230 V
MOVOL:500V - Supply voltage:500 V

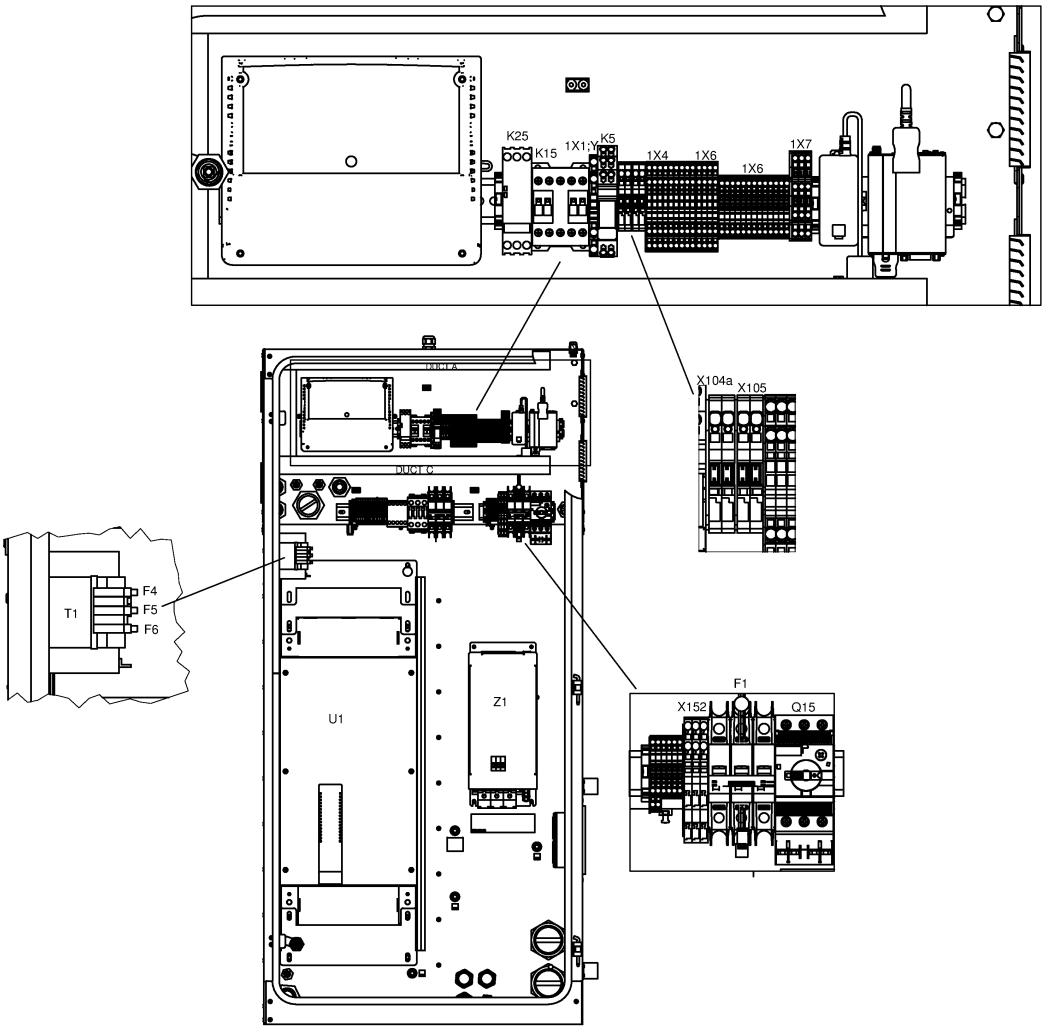
K25
K15
1X1:Y
K5
1X4
1X6
1X6
1X7
DUCT A
DUCT C
X104a
X105
T1
F4
F5
F6
U1
Z1
F1
X152
Q15

21.8 - Cubicle components GA 75L VSD+ - ((200V-400V-500V/50Hz, 460V/60Hz) - IEC, (230V-460V-575V/60Hz - UL-cUL)) - Full-Feature (28/08/2017 - 11/12/2018)

(((MOVOL:200V , MOVOL:400V , MOVOL:500V) + FREQ:50HZ , FREQ:60HZ + MOVOL:460V) + CAPPRE:IEC , (MOVOL:230V , MOVOL:460V , MOVOL:575V) + CAPPRE:ULCUL + FREQ:60HZ) + IDRY:Y + MODEL:GA75VP_16

Ref	Part Number	Qty	Name	Validity	EL
	1088 0039 35	1	PLATE	**(28/08/2017 - 20/08/2018)** ((((CAPPRM:AS1210 , CAPPRM:CE , CAPPRM:MHLW , CAPPRM:MOM) + MOVOL:400V , CAPPRM:CE + MOVOL:500V , CAPPRM:MHLW + MOVOL:200V) + FREQ:50HZ , (CAPPRM:ASME , CAPPRM:MHLW) + FREQ:60HZ + MOVOL:460V) + CAPPRE:IEC , (MOVOL:230V , MOVOL:460V , MOVOL:575V) + CAPPRE:ULCUL + CAPPRM:ASME + FREQ:60HZ) + COOL:AIR **(21/08/2018 - 10/12/2018)** ((((CAPPRM:AS1210 , CAPPRM:CE , CAPPRM:MHLW , CAPPRM:MOM) + MOVOL:400V , (CAPPRM:CE + MOVOL:500V , CAPPRM:MHLW + MOVOL:200V) + COOL:AIR) + FREQ:50HZ , (CAPPRM:ASME , CAPPRM:MHLW) + FREQ:60HZ + MOVOL:460V) + CAPPRE:IEC , ((MOVOL:230V , MOVOL:575V) + COOL:AIR , MOVOL:460V) + CAPPRE:ULCUL + CAPPRM:ASME + FREQ:60HZ) **(11/12/2018 - 11/12/2018)** ((((CAPPRM:AS1210 , CAPPRM:CE , CAPPRM:MHLW , CAPPRM:MOM) + MOVOL:400V , (CAPPRM:CE + MOVOL:500V , CAPPRM:MHLW + MOVOL:200V) + COOL:AIR) + FREQ:50HZ , (CAPPRM:ASME , CAPPRM:MHLW) + COOL:WATER + FREQ:60HZ + MOVOL:460V) + CAPPRE:IEC , ((MOVOL:230V , MOVOL:575V) + COOL:AIR , MOVOL:460V) + CAPPRE:ULCUL + CAPPRM:ASME + FREQ:60HZ)	1X6
	1088 0040 37	1	END PLATE	**(28/08/2017 - 20/08/2018)** ((((CAPPRM:AS1210 , CAPPRM:CE , CAPPRM:MHLW , CAPPRM:MOM) + MOVOL:400V , CAPPRM:CE + MOVOL:500V , CAPPRM:MHLW + MOVOL:200V) + FREQ:50HZ , (CAPPRM:ASME , CAPPRM:MHLW) + FREQ:60HZ + MOVOL:460V) + CAPPRE:IEC , (MOVOL:230V , MOVOL:460V , MOVOL:575V) + CAPPRE:ULCUL + CAPPRM:ASME + FREQ:60HZ) + COOL:AIR **(21/08/2018 - 10/12/2018)** ((((CAPPRM:AS1210 , CAPPRM:CE , CAPPRM:MHLW , CAPPRM:MOM) + MOVOL:400V , (CAPPRM:CE + MOVOL:500V , CAPPRM:MHLW + MOVOL:200V) + COOL:AIR) + FREQ:50HZ , (CAPPRM:ASME , CAPPRM:MHLW) + FREQ:60HZ + MOVOL:460V) + CAPPRE:IEC , ((MOVOL:230V , MOVOL:575V) + COOL:AIR , MOVOL:460V) + CAPPRE:ULCUL + CAPPRM:ASME + FREQ:60HZ) **(11/12/2018 - 11/12/2018)** ((((CAPPRM:AS1210 , CAPPRM:CE , CAPPRM:MHLW , CAPPRM:MOM) + MOVOL:400V , (CAPPRM:CE + MOVOL:500V , CAPPRM:MHLW + MOVOL:200V) + COOL:AIR) + FREQ:50HZ , (CAPPRM:ASME , CAPPRM:MHLW) + COOL:WATER + FREQ:60HZ + MOVOL:460V) + CAPPRE:IEC , ((MOVOL:230V , MOVOL:575V) + COOL:AIR , MOVOL:460V) + CAPPRE:ULCUL + CAPPRM:ASME + FREQ:60HZ)	1X7

Legend:

CAPPRE:IEC - Component approval electrical:IEC
CAPPRM:ASME - Component approval mechanical:ASME
CAPPRM:MOM - Component approval mechanical:MOM
FREQ:50HZ - Frequency:50 Hz
MODEL:GA75VP_16 - Model:GA 75VSD+
MOVOL:400V - Supply voltage:400 V
MOVOL:575V - Supply voltage:575 V
CAPPRE:ULCUL - Component approval electrical:UL/cUL
CAPPRM:CE - Component approval mechanical:CE
COOL:AIR - Cooling:Air cooled
FREQ:60HZ - Frequency:60 Hz
MOVOL:200V - Supply voltage:200 V
MOVOL:460V - Supply voltage:460 V
CAPPRM:AS1210 - Component approval mechanical:AS1210
CAPPRM:MHLW - Component approval mechanical:MHLW
COOL:WATER - Cooling:Water cooled
IDRY:Y - Integrated dryer:Yes
MOVOL:230V - Supply voltage:230 V
MOVOL:500V - Supply voltage:500 V

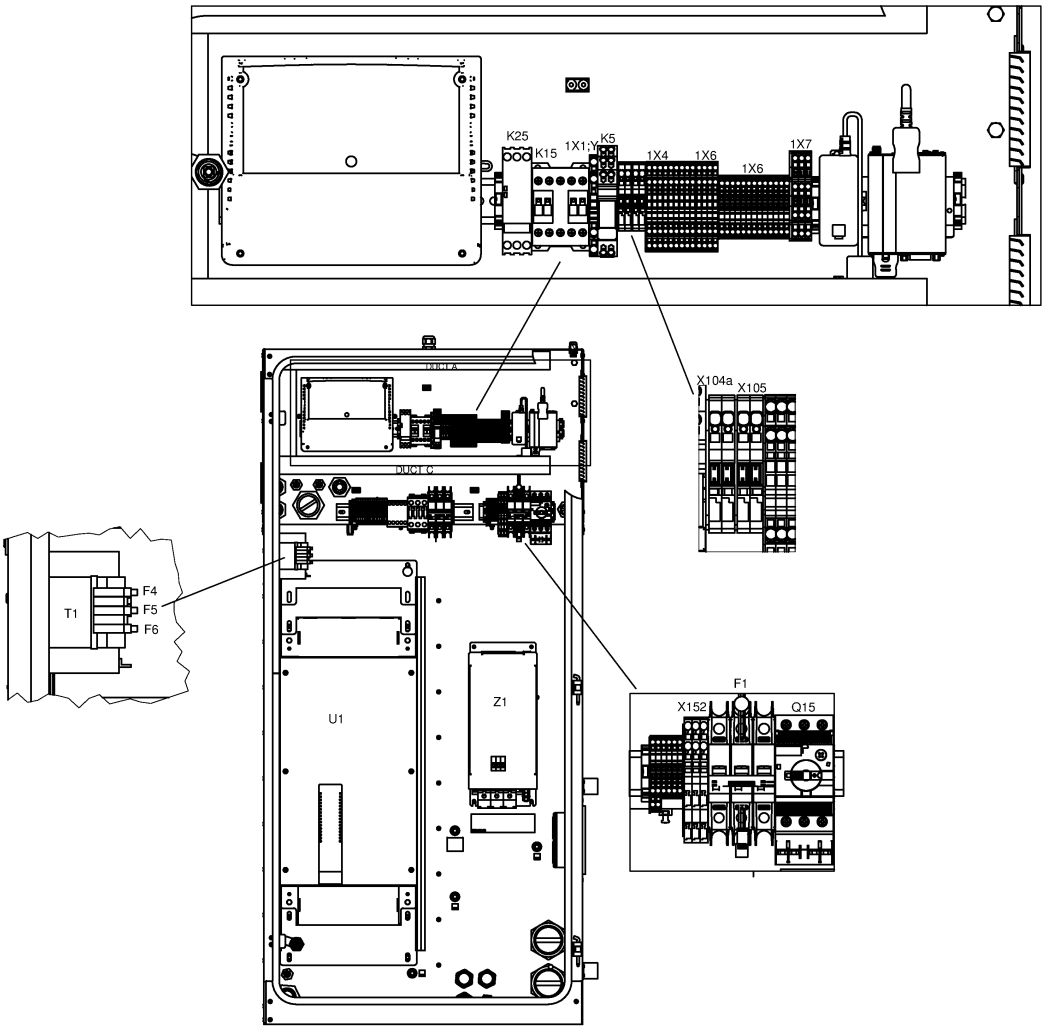
K25
K15
1X1:Y
K5
1X4
1X6
1X6
1X7
DUCT A
DUCT C
X104a
X105
T1
F4
F5
F6
U1
Z1
F1
X152
Q15

21.8 - Cubicle components GA 75L VSD+ - ((200V-400V-500V/50Hz, 460V/60Hz) - IEC, (230V-460V-575V/60Hz - UL-cUL)) - Full-Feature (28/08/2017 - 11/12/2018)

(((MOVOL:200V , MOVOL:400V , MOVOL:500V) + FREQ:50HZ , FREQ:60HZ + MOVOL:460V) + CAPPRE:IEC , (MOVOL:230V , MOVOL:460V , MOVOL:575V) + CAPPRE:ULCUL + FREQ:60HZ) + IDRY:Y + MODEL:GA75VP_16

Ref	Part Number	Qty	Name	Validity	EL
	1088 0039 36	9	TERMINAL	**(28/08/2017 - 20/08/2018)** ((((CAPPRM:AS1210 , CAPPRM:CE , CAPPRM:MHLW , CAPPRM:MOM) + MOVOL:400V , CAPPRM:CE + MOVOL:500V , CAPPRM:MHLW + MOVOL:200V) + FREQ:50HZ , (CAPPRM:ASME , CAPPRM:MHLW) + FREQ:60HZ + MOVOL:460V) + CAPPRE:IEC , (MOVOL:230V , MOVOL:460V , MOVOL:575V) + CAPPRE:ULCUL + CAPPRM:ASME + FREQ:60HZ) + COOL:AIR **(21/08/2018 - 10/12/2018)** ((((CAPPRM:AS1210 , CAPPRM:CE , CAPPRM:MHLW , CAPPRM:MOM) + MOVOL:400V , (CAPPRM:CE + MOVOL:500V , CAPPRM:MHLW + MOVOL:200V) + COOL:AIR) + FREQ:50HZ , (CAPPRM:ASME , CAPPRM:MHLW) + FREQ:60HZ + MOVOL:460V) + CAPPRE:IEC , ((MOVOL:230V , MOVOL:575V) + COOL:AIR , MOVOL:460V) + CAPPRE:ULCUL + CAPPRM:ASME + FREQ:60HZ) **(11/12/2018 - 11/12/2018)** ((((CAPPRM:AS1210 , CAPPRM:CE , CAPPRM:MHLW , CAPPRM:MOM) + MOVOL:400V , (CAPPRM:CE + MOVOL:500V , CAPPRM:MHLW + MOVOL:200V) + COOL:AIR) + FREQ:50HZ , (CAPPRM:ASME , CAPPRM:MHLW) + COOL:WATER + FREQ:60HZ + MOVOL:460V) + CAPPRE:IEC , ((MOVOL:230V , MOVOL:575V) + COOL:AIR , MOVOL:460V) + CAPPRE:ULCUL + CAPPRM:ASME + FREQ:60HZ)	1X4
	1088 0039 36	4	TERMINAL	**(28/08/2017 - 20/08/2018)** ((((CAPPRM:AS1210 , CAPPRM:CE , CAPPRM:MHLW , CAPPRM:MOM) + MOVOL:400V , CAPPRM:CE + MOVOL:500V , CAPPRM:MHLW + MOVOL:200V) + FREQ:50HZ , (CAPPRM:ASME , CAPPRM:MHLW) + FREQ:60HZ + MOVOL:460V) + CAPPRE:IEC , (MOVOL:230V , MOVOL:460V , MOVOL:575V) + CAPPRE:ULCUL + CAPPRM:ASME + FREQ:60HZ) + COOL:AIR **(21/08/2018 - 10/12/2018)** ((((CAPPRM:AS1210 , CAPPRM:CE , CAPPRM:MHLW , CAPPRM:MOM) + MOVOL:400V , (CAPPRM:CE + MOVOL:500V , CAPPRM:MHLW + MOVOL:200V) + COOL:AIR) + FREQ:50HZ , (CAPPRM:ASME , CAPPRM:MHLW) + FREQ:60HZ + MOVOL:460V) + CAPPRE:IEC , ((MOVOL:230V , MOVOL:575V) + COOL:AIR , MOVOL:460V) + CAPPRE:ULCUL + CAPPRM:ASME + FREQ:60HZ) **(11/12/2018 - 11/12/2018)** ((((CAPPRM:AS1210 , CAPPRM:CE , CAPPRM:MHLW , CAPPRM:MOM) + MOVOL:400V , (CAPPRM:CE + MOVOL:500V , CAPPRM:MHLW + MOVOL:200V) + COOL:AIR) + FREQ:50HZ , (CAPPRM:ASME , CAPPRM:MHLW) + COOL:WATER + FREQ:60HZ + MOVOL:460V) + CAPPRE:IEC , ((MOVOL:230V , MOVOL:575V) + COOL:AIR , MOVOL:460V) + CAPPRE:ULCUL + CAPPRM:ASME + FREQ:60HZ)	1X6

Legend:

CAPPRE:IEC - Component approval electrical:IEC
CAPPRM:ASME - Component approval mechanical:ASME
CAPPRM:MOM - Component approval mechanical:MOM
FREQ:50HZ - Frequency:50 Hz
MODEL:GA75VP_16 - Model:GA 75VSD+
MOVOL:400V - Supply voltage:400 V
MOVOL:575V - Supply voltage:575 V
CAPPRE:ULCUL - Component approval electrical:UL/cUL
CAPPRM:CE - Component approval mechanical:CE
COOL:AIR - Cooling:Air cooled
FREQ:60HZ - Frequency:60 Hz
MOVOL:200V - Supply voltage:200 V
MOVOL:460V - Supply voltage:460 V
CAPPRM:AS1210 - Component approval mechanical:AS1210
CAPPRM:MHLW - Component approval mechanical:MHLW
COOL:WATER - Cooling:Water cooled
IDRY:Y - Integrated dryer:Yes
MOVOL:230V - Supply voltage:230 V
MOVOL:500V - Supply voltage:500 V

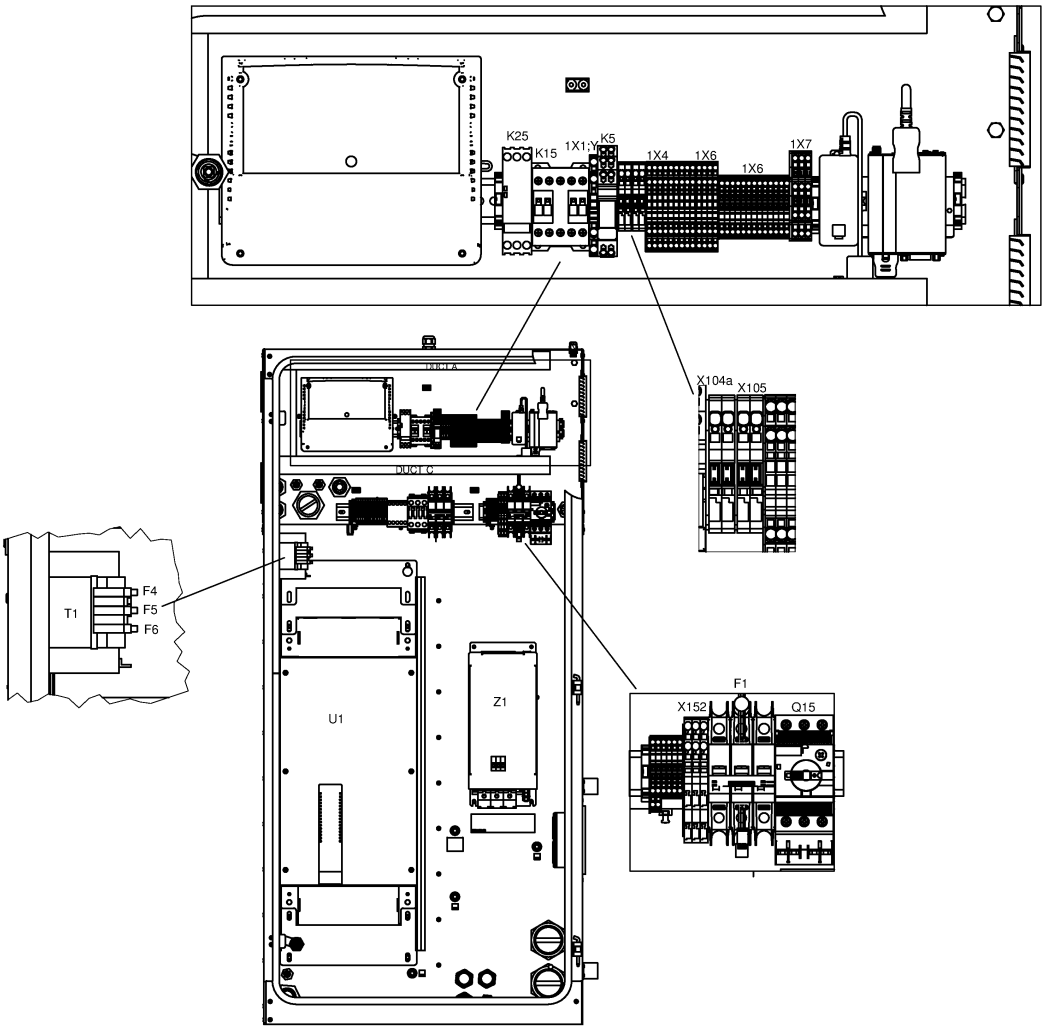
K25
K15
1X1:Y
K5
1X4
1X6
1X6
1X7
DUCT A
DUCT C
X104a
X105
T1
F4
F5
F6
U1
Z1
F1
X152
Q15

21.8 - Cubicle components GA 75L VSD+ - ((200V-400V-500V/50Hz, 460V/60Hz) - IEC, (230V-460V-575V/60Hz - UL-cUL)) - Full-Feature (28/08/2017 - 11/12/2018)

(((MOVOL:200V , MOVOL:400V , MOVOL:500V) + FREQ:50HZ , FREQ:60HZ + MOVOL:460V) + CAPPRE:IEC , (MOVOL:230V , MOVOL:460V , MOVOL:575V) + CAPPRE:ULCUL + FREQ:60HZ) + IDRY:Y + MODEL:GA75VP_16

Ref	Part Number	Qty	Name	Validity	EL
	1088 0039 37	1	END PLATE	**(28/08/2017 - 20/08/2018)** ((((CAPPRM:AS1210 , CAPPRM:CE , CAPPRM:MHLW , CAPPRM:MOM) + MOVOL:400V , CAPPRM:CE + MOVOL:500V , CAPPRM:MHLW + MOVOL:200V) + FREQ:50HZ , (CAPPRM:ASME , CAPPRM:MHLW) + FREQ:60HZ + MOVOL:460V) + CAPPRE:IEC , (MOVOL:230V , MOVOL:460V , MOVOL:575V) + CAPPRE:ULCUL + CAPPRM:ASME + FREQ:60HZ) + COOL:AIR **(21/08/2018 - 10/12/2018)** ((((CAPPRM:AS1210 , CAPPRM:CE , CAPPRM:MHLW , CAPPRM:MOM) + MOVOL:400V , (CAPPRM:CE + MOVOL:500V , CAPPRM:MHLW + MOVOL:200V) + COOL:AIR) + FREQ:50HZ , (CAPPRM:ASME , CAPPRM:MHLW) + FREQ:60HZ + MOVOL:460V) + CAPPRE:IEC , ((MOVOL:230V , MOVOL:575V) + COOL:AIR , MOVOL:460V) + CAPPRE:ULCUL + CAPPRM:ASME + FREQ:60HZ) **(11/12/2018 - 11/12/2018)** ((((CAPPRM:AS1210 , CAPPRM:CE , CAPPRM:MHLW , CAPPRM:MOM) + MOVOL:400V , (CAPPRM:CE + MOVOL:500V , CAPPRM:MHLW + MOVOL:200V) + COOL:AIR) + FREQ:50HZ , (CAPPRM:ASME , CAPPRM:MHLW) + COOL:WATER + FREQ:60HZ + MOVOL:460V) + CAPPRE:IEC , ((MOVOL:230V , MOVOL:575V) + COOL:AIR , MOVOL:460V) + CAPPRE:ULCUL + CAPPRM:ASME + FREQ:60HZ)	1X4
	1088 0039 37	1	END PLATE	**(28/08/2017 - 20/08/2018)** ((((CAPPRM:AS1210 , CAPPRM:CE , CAPPRM:MHLW , CAPPRM:MOM) + MOVOL:400V , CAPPRM:CE + MOVOL:500V , CAPPRM:MHLW + MOVOL:200V) + FREQ:50HZ , (CAPPRM:ASME , CAPPRM:MHLW) + FREQ:60HZ + MOVOL:460V) + CAPPRE:IEC , (MOVOL:230V , MOVOL:460V , MOVOL:575V) + CAPPRE:ULCUL + CAPPRM:ASME + FREQ:60HZ) + COOL:AIR **(21/08/2018 - 10/12/2018)** ((((CAPPRM:AS1210 , CAPPRM:CE , CAPPRM:MHLW , CAPPRM:MOM) + MOVOL:400V , (CAPPRM:CE + MOVOL:500V , CAPPRM:MHLW + MOVOL:200V) + COOL:AIR) + FREQ:50HZ , (CAPPRM:ASME , CAPPRM:MHLW) + FREQ:60HZ + MOVOL:460V) + CAPPRE:IEC , ((MOVOL:230V , MOVOL:575V) + COOL:AIR , MOVOL:460V) + CAPPRE:ULCUL + CAPPRM:ASME + FREQ:60HZ) **(11/12/2018 - 11/12/2018)** ((((CAPPRM:AS1210 , CAPPRM:CE , CAPPRM:MHLW , CAPPRM:MOM) + MOVOL:400V , (CAPPRM:CE + MOVOL:500V , CAPPRM:MHLW + MOVOL:200V) + COOL:AIR) + FREQ:50HZ , (CAPPRM:ASME , CAPPRM:MHLW) + COOL:WATER + FREQ:60HZ + MOVOL:460V) + CAPPRE:IEC , ((MOVOL:230V , MOVOL:575V) + COOL:AIR , MOVOL:460V) + CAPPRE:ULCUL + CAPPRM:ASME + FREQ:60HZ)	1X6

Legend:

CAPPRE:IEC - Component approval electrical:IEC
CAPPRM:ASME - Component approval mechanical:ASME
CAPPRM:MOM - Component approval mechanical:MOM
FREQ:50HZ - Frequency:50 Hz
MODEL:GA75VP_16 - Model:GA 75VSD+
MOVOL:400V - Supply voltage:400 V
MOVOL:575V - Supply voltage:575 V
CAPPRE:ULCUL - Component approval electrical:UL/cUL
CAPPRM:CE - Component approval mechanical:CE
COOL:AIR - Cooling:Air cooled
FREQ:60HZ - Frequency:60 Hz
MOVOL:200V - Supply voltage:200 V
MOVOL:460V - Supply voltage:460 V
CAPPRM:AS1210 - Component approval mechanical:AS1210
CAPPRM:MHLW - Component approval mechanical:MHLW
COOL:WATER - Cooling:Water cooled
IDRY:Y - Integrated dryer:Yes
MOVOL:230V - Supply voltage:230 V
MOVOL:500V - Supply voltage:500 V

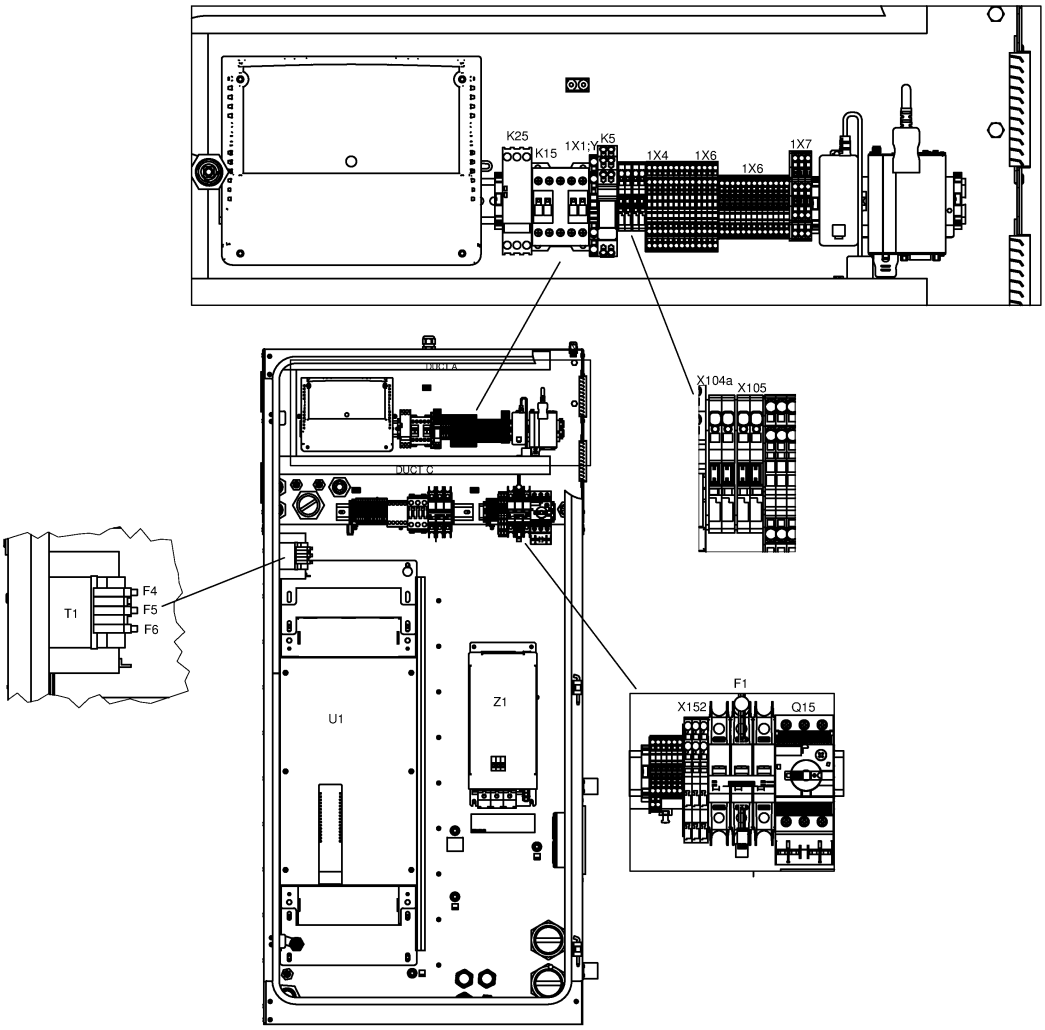
K25
K15
1X1:Y
K5
1X4
1X6
1X6
1X7
DUCT A
DUCT C
X104a
X105
T1
F4
F5
F6
U1
Z1
F1
X152
Q15

21.8 - Cubicle components GA 75L VSD+ - ((200V-400V-500V/50Hz, 460V/60Hz) - IEC, (230V-460V-575V/60Hz - UL-cUL)) - Full-Feature (28/08/2017 - 11/12/2018)

(((MOVOL:200V , MOVOL:400V , MOVOL:500V) + FREQ:50HZ , FREQ:60HZ + MOVOL:460V) + CAPPRE:IEC , (MOVOL:230V , MOVOL:460V , MOVOL:575V) + CAPPRE:ULCUL + FREQ:60HZ) + IDRY:Y + MODEL:GA75VP_16

Ref	Part Number	Qty	Name	Validity	EL
	1088 0039 37	1	END PLATE	**(28/08/2017 - 20/08/2018)** ((((CAPPRM:AS1210 , CAPPRM:CE , CAPPRM:MHLW , CAPPRM:MOM) + MOVOL:400V , CAPPRM:CE + MOVOL:500V , CAPPRM:MHLW + MOVOL:200V) + FREQ:50HZ , (CAPPRM:ASME , CAPPRM:MHLW) + FREQ:60HZ + MOVOL:460V) + CAPPRE:IEC , (MOVOL:230V , MOVOL:460V , MOVOL:575V) + CAPPRE:ULCUL + CAPPRM:ASME + FREQ:60HZ) + COOL:AIR **(21/08/2018 - 10/12/2018)** ((((CAPPRM:AS1210 , CAPPRM:CE , CAPPRM:MHLW , CAPPRM:MOM) + MOVOL:400V , (CAPPRM:CE + MOVOL:500V , CAPPRM:MHLW + MOVOL:200V) + COOL:AIR) + FREQ:50HZ , (CAPPRM:ASME , CAPPRM:MHLW) + FREQ:60HZ + MOVOL:460V) + CAPPRE:IEC , ((MOVOL:230V , MOVOL:575V) + COOL:AIR , MOVOL:460V) + CAPPRE:ULCUL + CAPPRM:ASME + FREQ:60HZ) **(11/12/2018 - 11/12/2018)** ((((CAPPRM:AS1210 , CAPPRM:CE , CAPPRM:MHLW , CAPPRM:MOM) + MOVOL:400V , (CAPPRM:CE + MOVOL:500V , CAPPRM:MHLW + MOVOL:200V) + COOL:AIR) + FREQ:50HZ , (CAPPRM:ASME , CAPPRM:MHLW) + COOL:WATER + FREQ:60HZ + MOVOL:460V) + CAPPRE:IEC , ((MOVOL:230V , MOVOL:575V) + COOL:AIR , MOVOL:460V) + CAPPRE:ULCUL + CAPPRM:ASME + FREQ:60HZ)	1X1:Y/D
	1088 0037 81	1	CONNECTOR	**(28/08/2017 - 20/08/2018)** ((((CAPPRM:AS1210 , CAPPRM:CE , CAPPRM:MHLW , CAPPRM:MOM) + MOVOL:400V , CAPPRM:CE + MOVOL:500V , CAPPRM:MHLW + MOVOL:200V) + FREQ:50HZ , (CAPPRM:ASME , CAPPRM:MHLW) + FREQ:60HZ + MOVOL:460V) + CAPPRE:IEC , (MOVOL:230V , MOVOL:460V , MOVOL:575V) + CAPPRE:ULCUL + CAPPRM:ASME + FREQ:60HZ) + COOL:AIR **(21/08/2018 - 10/12/2018)** ((((CAPPRM:AS1210 , CAPPRM:CE , CAPPRM:MHLW , CAPPRM:MOM) + MOVOL:400V , (CAPPRM:CE + MOVOL:500V , CAPPRM:MHLW + MOVOL:200V) + COOL:AIR) + FREQ:50HZ , (CAPPRM:ASME , CAPPRM:MHLW) + FREQ:60HZ + MOVOL:460V) + CAPPRE:IEC , ((MOVOL:230V , MOVOL:575V) + COOL:AIR , MOVOL:460V) + CAPPRE:ULCUL + CAPPRM:ASME + FREQ:60HZ) **(11/12/2018 - 11/12/2018)** ((((CAPPRM:AS1210 , CAPPRM:CE , CAPPRM:MHLW , CAPPRM:MOM) + MOVOL:400V , (CAPPRM:CE + MOVOL:500V , CAPPRM:MHLW + MOVOL:200V) + COOL:AIR) + FREQ:50HZ , (CAPPRM:ASME , CAPPRM:MHLW) + COOL:WATER + FREQ:60HZ + MOVOL:460V) + CAPPRE:IEC , ((MOVOL:230V , MOVOL:575V) + COOL:AIR , MOVOL:460V) + CAPPRE:ULCUL + CAPPRM:ASME + FREQ:60HZ)	2X27

Legend:

CAPPRE:IEC - Component approval electrical:IEC
CAPPRE:ULCUL - Component approval electrical:UL/cUL
CAPPRM:AS1210 - Component approval mechanical:AS1210
CAPPRM:ASME - Component approval mechanical:ASME
CAPPRM:CE - Component approval mechanical:CE
CAPPRM:MHLW - Component approval mechanical:MHLW
CAPPRM:MOM - Component approval mechanical:MOM
COOL:AIR - Cooling:Air cooled
COOL:WATER - Cooling:Water cooled
FREQ:50HZ - Frequency:50 Hz
FREQ:60HZ - Frequency:60 Hz
IDRY:Y - Integrated dryer:Yes
MODEL:GA75VP_16 - Model:GA 75VSD+
MOVOL:200V - Supply voltage:200 V
MOVOL:230V - Supply voltage:230 V
MOVOL:400V - Supply voltage:400 V
MOVOL:460V - Supply voltage:460 V
MOVOL:500V - Supply voltage:500 V
MOVOL:575V - Supply voltage:575 V

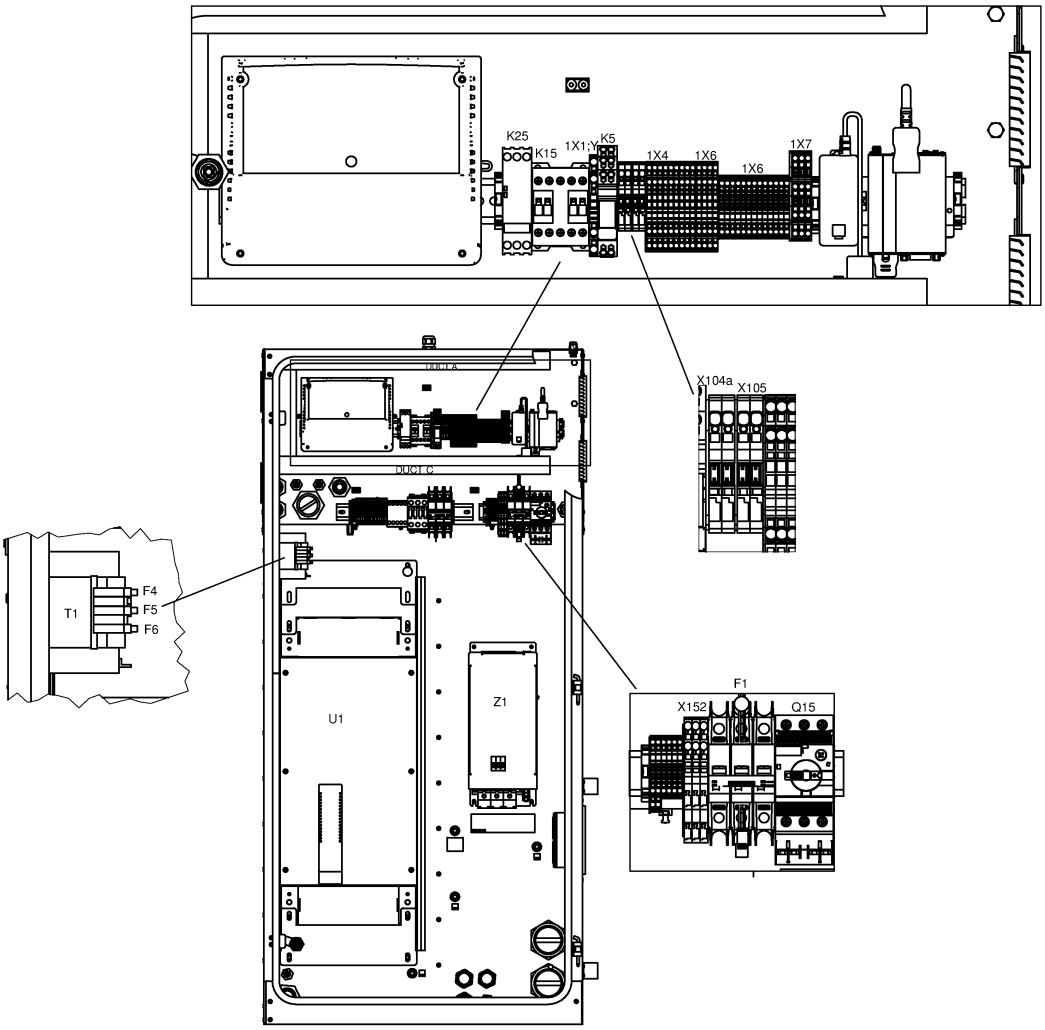
K25
K15
1X1:Y
K5
1X4
1X6
1X6
1X7
DUCT A
DUCT C
X104a
X105
T1
F4
F5
F6
U1
Z1
F1
X152
Q15

21.8 - Cubicle components GA 75L VSD+ - ((200V-400V-500V/50Hz, 460V/60Hz) - IEC, (230V-460V-575V/60Hz - UL-cUL)) - Full-Feature (28/08/2017 - 11/12/2018)

(((MOVOL:200V , MOVOL:400V , MOVOL:500V) + FREQ:50HZ , FREQ:60HZ + MOVOL:460V) + CAPPRE:IEC , (MOVOL:230V , MOVOL:460V , MOVOL:575V) + CAPPRE:ULCUL + FREQ:60HZ) + IDRY:Y + MODEL:GA75VP_16

Ref	Part Number	Qty	Name	Validity	EL
	1088 0037 80	1	CONNECTOR	**(28/08/2017 - 20/08/2018)** ((((CAPPRM:AS1210 , CAPPRM:CE , CAPPRM:MHLW , CAPPRM:MOM) + MOVOL:400V , CAPPRM:CE + MOVOL:500V , CAPPRM:MHLW + MOVOL:200V) + FREQ:50HZ , (CAPPRM:ASME , CAPPRM:MHLW) + FREQ:60HZ + MOVOL:460V) + CAPPRE:IEC , (MOVOL:230V , MOVOL:460V , MOVOL:575V) + CAPPRE:ULCUL + CAPPRM:ASME + FREQ:60HZ) + COOL:AIR **(21/08/2018 - 10/12/2018)** ((((CAPPRM:AS1210 , CAPPRM:CE , CAPPRM:MHLW , CAPPRM:MOM) + MOVOL:400V , (CAPPRM:CE + MOVOL:500V , CAPPRM:MHLW + MOVOL:200V) + COOL:AIR) + FREQ:50HZ , (CAPPRM:ASME , CAPPRM:MHLW) + FREQ:60HZ + MOVOL:460V) + CAPPRE:IEC , ((MOVOL:230V , MOVOL:575V) + COOL:AIR , MOVOL:460V) + CAPPRE:ULCUL + CAPPRM:ASME + FREQ:60HZ) **(11/12/2018 - 11/12/2018)** ((((CAPPRM:AS1210 , CAPPRM:CE , CAPPRM:MHLW , CAPPRM:MOM) + MOVOL:400V , (CAPPRM:CE + MOVOL:500V , CAPPRM:MHLW + MOVOL:200V) + COOL:AIR) + FREQ:50HZ , (CAPPRM:ASME , CAPPRM:MHLW) + COOL:WATER + FREQ:60HZ + MOVOL:460V) + CAPPRE:IEC , ((MOVOL:230V , MOVOL:575V) + COOL:AIR , MOVOL:460V) + CAPPRE:ULCUL + CAPPRM:ASME + FREQ:60HZ)	2X28
	1088 0031 32	1	CONNECTOR	**(28/08/2017 - 20/08/2018)** ((((CAPPRM:AS1210 , CAPPRM:CE , CAPPRM:MHLW , CAPPRM:MOM) + MOVOL:400V , CAPPRM:CE + MOVOL:500V , CAPPRM:MHLW + MOVOL:200V) + FREQ:50HZ , (CAPPRM:ASME , CAPPRM:MHLW) + FREQ:60HZ + MOVOL:460V) + CAPPRE:IEC , (MOVOL:230V , MOVOL:460V , MOVOL:575V) + CAPPRE:ULCUL + CAPPRM:ASME + FREQ:60HZ) + COOL:AIR **(21/08/2018 - 10/12/2018)** ((((CAPPRM:AS1210 , CAPPRM:CE , CAPPRM:MHLW , CAPPRM:MOM) + MOVOL:400V , (CAPPRM:CE + MOVOL:500V , CAPPRM:MHLW + MOVOL:200V) + COOL:AIR) + FREQ:50HZ , (CAPPRM:ASME , CAPPRM:MHLW) + FREQ:60HZ + MOVOL:460V) + CAPPRE:IEC , ((MOVOL:230V , MOVOL:575V) + COOL:AIR , MOVOL:460V) + CAPPRE:ULCUL + CAPPRM:ASME + FREQ:60HZ) **(11/12/2018 - 11/12/2018)** ((((CAPPRM:AS1210 , CAPPRM:CE , CAPPRM:MHLW , CAPPRM:MOM) + MOVOL:400V , (CAPPRM:CE + MOVOL:500V , CAPPRM:MHLW + MOVOL:200V) + COOL:AIR) + FREQ:50HZ , (CAPPRM:ASME , CAPPRM:MHLW) + COOL:WATER + FREQ:60HZ + MOVOL:460V) + CAPPRE:IEC , ((MOVOL:230V , MOVOL:575V) + COOL:AIR , MOVOL:460V) + CAPPRE:ULCUL + CAPPRM:ASME + FREQ:60HZ)	2X30

Legend:

CAPPRE:IEC - Component approval electrical:IEC
CAPPRM:ASME - Component approval mechanical:ASME
CAPPRM:MOM - Component approval mechanical:MOM
FREQ:50HZ - Frequency:50 Hz
MODEL:GA75VP_16 - Model:GA 75VSD+
MOVOL:400V - Supply voltage:400 V
MOVOL:575V - Supply voltage:575 V
CAPPRE:ULCUL - Component approval electrical:UL/cUL
CAPPRM:CE - Component approval mechanical:CE
COOL:AIR - Cooling:Air cooled
FREQ:60HZ - Frequency:60 Hz
MOVOL:200V - Supply voltage:200 V
MOVOL:460V - Supply voltage:460 V
CAPPRM:AS1210 - Component approval mechanical:AS1210
CAPPRM:MHLW - Component approval mechanical:MHLW
COOL:WATER - Cooling:Water cooled
IDRY:Y - Integrated dryer:Yes
MOVOL:230V - Supply voltage:230 V
MOVOL:500V - Supply voltage:500 V

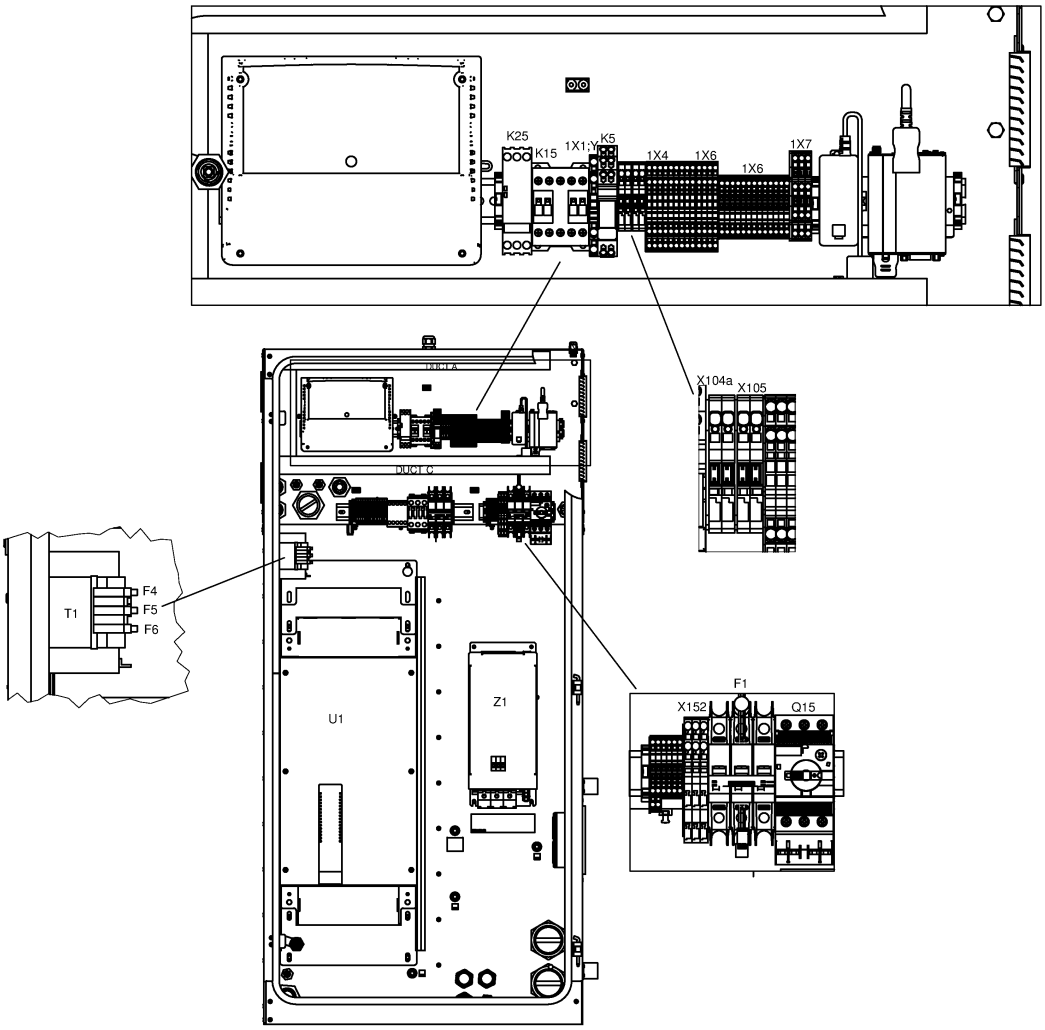
K25
K15
1X1:Y
K5
1X4
1X6
1X6
1X7
DUCT A
DUCT C
X104a
X105
T1
F4
F5
F6
U1
Z1
F1
X152
Q15

21.8 - Cubicle components GA 75L VSD+ - ((200V-400V-500V/50Hz, 460V/60Hz) - IEC, (230V-460V-575V/60Hz - UL-cUL)) - Full-Feature (28/08/2017 - 11/12/2018)

(((MOVOL:200V , MOVOL:400V , MOVOL:500V) + FREQ:50HZ , FREQ:60HZ + MOVOL:460V) + CAPPRE:IEC , (MOVOL:230V , MOVOL:460V , MOVOL:575V) + CAPPRE:ULCUL + FREQ:60HZ) + IDRY:Y + MODEL:GA75VP_16

Ref	Part Number	Qty	Name	Validity	EL
	1088 0031 26	1	CONNECTOR 6-POLE	**(28/08/2017 - 20/08/2018)** ((((CAPPRM:AS1210 , CAPPRM:CE , CAPPRM:MHLW , CAPPRM:MOM) + MOVOL:400V , CAPPRM:CE + MOVOL:500V , CAPPRM:MHLW + MOVOL:200V) + FREQ:50HZ , (CAPPRM:ASME , CAPPRM:MHLW) + FREQ:60HZ + MOVOL:460V) + CAPPRE:IEC , (MOVOL:230V , MOVOL:460V , MOVOL:575V) + CAPPRE:ULCUL + CAPPRM:ASME + FREQ:60HZ) + COOL:AIR **(21/08/2018 - 10/12/2018)** ((((CAPPRM:AS1210 , CAPPRM:CE , CAPPRM:MHLW , CAPPRM:MOM) + MOVOL:400V , (CAPPRM:CE + MOVOL:500V , CAPPRM:MHLW + MOVOL:200V) + COOL:AIR) + FREQ:50HZ , (CAPPRM:ASME , CAPPRM:MHLW) + FREQ:60HZ + MOVOL:460V) + CAPPRE:IEC , ((MOVOL:230V , MOVOL:575V) + COOL:AIR , MOVOL:460V) + CAPPRE:ULCUL + CAPPRM:ASME + FREQ:60HZ) **(11/12/2018 - 11/12/2018)** ((((CAPPRM:AS1210 , CAPPRM:CE , CAPPRM:MHLW , CAPPRM:MOM) + MOVOL:400V , (CAPPRM:CE + MOVOL:500V , CAPPRM:MHLW + MOVOL:200V) + COOL:AIR) + FREQ:50HZ , (CAPPRM:ASME , CAPPRM:MHLW) + COOL:WATER + FREQ:60HZ + MOVOL:460V) + CAPPRE:IEC , ((MOVOL:230V , MOVOL:575V) + COOL:AIR , MOVOL:460V) + CAPPRE:ULCUL + CAPPRM:ASME + FREQ:60HZ)	2X31
	~~1089 9664 06~~	1	SWITCH	**(28/08/2017 - 20/08/2018)** ((((CAPPRM:AS1210 , CAPPRM:CE , CAPPRM:MHLW , CAPPRM:MOM) + MOVOL:400V , CAPPRM:CE + MOVOL:500V , CAPPRM:MHLW + MOVOL:200V) + FREQ:50HZ , (CAPPRM:ASME , CAPPRM:MHLW) + FREQ:60HZ + MOVOL:460V) + CAPPRE:IEC , (MOVOL:230V , MOVOL:460V , MOVOL:575V) + CAPPRE:ULCUL + CAPPRM:ASME + FREQ:60HZ) + COOL:AIR **(21/08/2018 - 10/12/2018)** ((((CAPPRM:AS1210 , CAPPRM:CE , CAPPRM:MHLW , CAPPRM:MOM) + MOVOL:400V , (CAPPRM:CE + MOVOL:500V , CAPPRM:MHLW + MOVOL:200V) + COOL:AIR) + FREQ:50HZ , (CAPPRM:ASME , CAPPRM:MHLW) + FREQ:60HZ + MOVOL:460V) + CAPPRE:IEC , ((MOVOL:230V , MOVOL:575V) + COOL:AIR , MOVOL:460V) + CAPPRE:ULCUL + CAPPRM:ASME + FREQ:60HZ) **(11/12/2018 - 11/12/2018)** ((((CAPPRM:AS1210 , CAPPRM:CE , CAPPRM:MHLW , CAPPRM:MOM) + MOVOL:400V , (CAPPRM:CE + MOVOL:500V , CAPPRM:MHLW + MOVOL:200V) + COOL:AIR) + FREQ:50HZ , (CAPPRM:ASME , CAPPRM:MHLW) + COOL:WATER + FREQ:60HZ + MOVOL:460V) + CAPPRE:IEC , ((MOVOL:230V , MOVOL:575V) + COOL:AIR , MOVOL:460V) + CAPPRE:ULCUL + CAPPRM:ASME + FREQ:60HZ)	Q15
	Substituted by:	1089 9551 97 - AUX.CONTACT CIRCUIT BREAKER (quantity: 1)			

Legend:

CAPPRE:IEC - Component approval electrical:IEC
CAPPRE:ULCUL - Component approval electrical:UL/cUL
CAPPRM:AS1210 - Component approval mechanical:AS1210
CAPPRM:ASME - Component approval mechanical:ASME
CAPPRM:CE - Component approval mechanical:CE
CAPPRM:MHLW - Component approval mechanical:MHLW
CAPPRM:MOM - Component approval mechanical:MOM
COOL:AIR - Cooling:Air cooled
COOL:WATER - Cooling:Water cooled
FREQ:50HZ - Frequency:50 Hz
FREQ:60HZ - Frequency:60 Hz
IDRY:Y - Integrated dryer:Yes
MODEL:GA75VP_16 - Model:GA 75VSD+
MOVOL:200V - Supply voltage:200 V
MOVOL:230V - Supply voltage:230 V
MOVOL:400V - Supply voltage:400 V
MOVOL:460V - Supply voltage:460 V
MOVOL:500V - Supply voltage:500 V
MOVOL:575V - Supply voltage:575 V

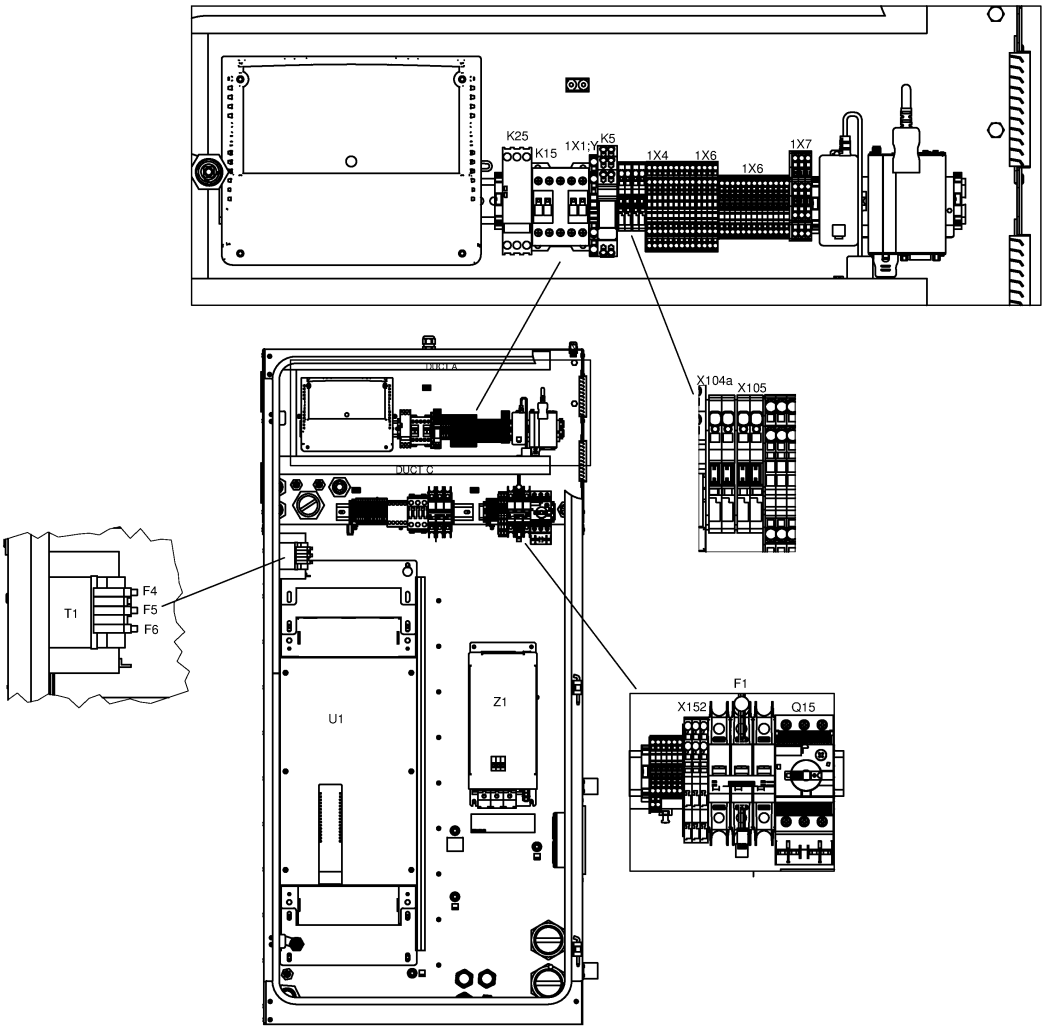
K25
K15
1X1:Y
K5
1X4
1X6
1X6
1X7
DUCT A
DUCT C
X104a
X105
T1
F4
F5
F6
U1
Z1
F1
X152
Q15

21.8 - Cubicle components GA 75L VSD+ - ((200V-400V-500V/50Hz, 460V/60Hz) - IEC, (230V-460V-575V/60Hz - UL-cUL)) - Full-Feature (28/08/2017 - 11/12/2018)

(((MOVOL:200V , MOVOL:400V , MOVOL:500V) + FREQ:50HZ , FREQ:60HZ + MOVOL:460V) + CAPPRE:IEC , (MOVOL:230V , MOVOL:460V , MOVOL:575V) + CAPPRE:ULCUL + FREQ:60HZ) + IDRY:Y + MODEL:GA75VP_16

Ref	Part Number	Qty	Name	Validity	EL
	1089 9551 18	1	CIRCUIT BREAKER	**(28/08/2017 - 20/08/2018)** ((((CAPPRM:AS1210 , CAPPRM:CE , CAPPRM:MHLW , CAPPRM:MOM) + MOVOL:400V , CAPPRM:CE + MOVOL:500V , CAPPRM:MHLW + MOVOL:200V) + FREQ:50HZ , (CAPPRM:ASME , CAPPRM:MHLW) + FREQ:60HZ + MOVOL:460V) + CAPPRE:IEC , (MOVOL:230V , MOVOL:460V , MOVOL:575V) + CAPPRE:ULCUL + CAPPRM:ASME + FREQ:60HZ) + COOL:AIR **(21/08/2018 - 10/12/2018)** ((((CAPPRM:AS1210 , CAPPRM:CE , CAPPRM:MHLW , CAPPRM:MOM) + MOVOL:400V , (CAPPRM:CE + MOVOL:500V , CAPPRM:MHLW + MOVOL:200V) + COOL:AIR) + FREQ:50HZ , (CAPPRM:ASME , CAPPRM:MHLW) + FREQ:60HZ + MOVOL:460V) + CAPPRE:IEC , ((MOVOL:230V , MOVOL:575V) + COOL:AIR , MOVOL:460V) + CAPPRE:ULCUL + CAPPRM:ASME + FREQ:60HZ) **(11/12/2018 - 11/12/2018)** ((((CAPPRM:AS1210 , CAPPRM:CE , CAPPRM:MHLW , CAPPRM:MOM) + MOVOL:400V , (CAPPRM:CE + MOVOL:500V , CAPPRM:MHLW + MOVOL:200V) + COOL:AIR) + FREQ:50HZ , (CAPPRM:ASME , CAPPRM:MHLW) + COOL:WATER + FREQ:60HZ + MOVOL:460V) + CAPPRE:IEC , ((MOVOL:230V , MOVOL:575V) + COOL:AIR , MOVOL:460V) + CAPPRE:ULCUL + CAPPRM:ASME + FREQ:60HZ)	Q15
	1088 0038 26	1	TERMINAL	**(28/08/2017 - 20/08/2018)** ((((CAPPRM:AS1210 , CAPPRM:CE , CAPPRM:MHLW , CAPPRM:MOM) + MOVOL:400V , CAPPRM:CE + MOVOL:500V , CAPPRM:MHLW + MOVOL:200V) + FREQ:50HZ , (CAPPRM:ASME , CAPPRM:MHLW) + FREQ:60HZ + MOVOL:460V) + CAPPRE:IEC , (MOVOL:230V , MOVOL:460V , MOVOL:575V) + CAPPRE:ULCUL + CAPPRM:ASME + FREQ:60HZ) + COOL:AIR **(21/08/2018 - 10/12/2018)** ((((CAPPRM:AS1210 , CAPPRM:CE , CAPPRM:MHLW , CAPPRM:MOM) + MOVOL:400V , (CAPPRM:CE + MOVOL:500V , CAPPRM:MHLW + MOVOL:200V) + COOL:AIR) + FREQ:50HZ , (CAPPRM:ASME , CAPPRM:MHLW) + FREQ:60HZ + MOVOL:460V) + CAPPRE:IEC , ((MOVOL:230V , MOVOL:575V) + COOL:AIR , MOVOL:460V) + CAPPRE:ULCUL + CAPPRM:ASME + FREQ:60HZ) **(11/12/2018 - 11/12/2018)** ((((CAPPRM:AS1210 , CAPPRM:CE , CAPPRM:MHLW , CAPPRM:MOM) + MOVOL:400V , (CAPPRM:CE + MOVOL:500V , CAPPRM:MHLW + MOVOL:200V) + COOL:AIR) + FREQ:50HZ , (CAPPRM:ASME , CAPPRM:MHLW) + COOL:WATER + FREQ:60HZ + MOVOL:460V) + CAPPRE:IEC , ((MOVOL:230V , MOVOL:575V) + COOL:AIR , MOVOL:460V) + CAPPRE:ULCUL + CAPPRM:ASME + FREQ:60HZ)	1X1:Y/D

Legend:

CAPPRE:IEC - Component approval electrical:IEC
CAPPRE:ULCUL - Component approval electrical:UL/cUL
CAPPRM:AS1210 - Component approval mechanical:AS1210
CAPPRM:ASME - Component approval mechanical:ASME
CAPPRM:CE - Component approval mechanical:CE
CAPPRM:MHLW - Component approval mechanical:MHLW
CAPPRM:MOM - Component approval mechanical:MOM
COOL:AIR - Cooling:Air cooled
COOL:WATER - Cooling:Water cooled
FREQ:50HZ - Frequency:50 Hz
FREQ:60HZ - Frequency:60 Hz
IDRY:Y - Integrated dryer:Yes
MODEL:GA75VP_16 - Model:GA 75VSD+
MOVOL:200V - Supply voltage:200 V
MOVOL:230V - Supply voltage:230 V
MOVOL:400V - Supply voltage:400 V
MOVOL:460V - Supply voltage:460 V
MOVOL:500V - Supply voltage:500 V
MOVOL:575V - Supply voltage:575 V

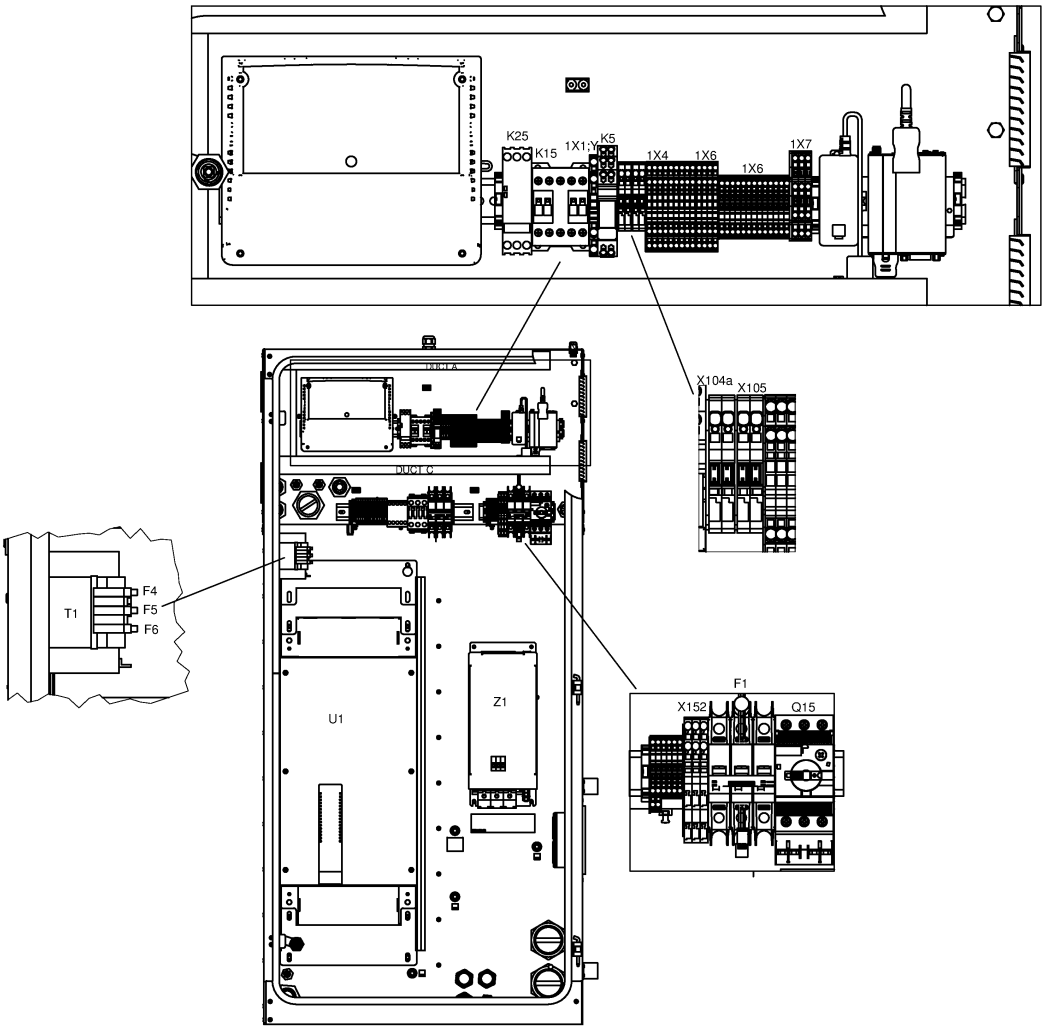
K25
K15
1X1:Y
K5
1X4
1X6
1X6
1X7
DUCT A
DUCT C
X104a
X105
T1
F4
F5
F6
U1
Z1
F1
X152
Q15

21.8 - Cubicle components GA 75L VSD+ - ((200V-400V-500V/50Hz, 460V/60Hz) - IEC, (230V-460V-575V/60Hz - UL-cUL)) - Full-Feature (28/08/2017 - 11/12/2018)

(((MOVOL:200V , MOVOL:400V , MOVOL:500V) + FREQ:50HZ , FREQ:60HZ + MOVOL:460V) + CAPPRE:IEC , (MOVOL:230V , MOVOL:460V , MOVOL:575V) + CAPPRE:ULCUL + FREQ:60HZ) + IDRY:Y + MODEL:GA75VP_16

Ref	Part Number	Qty	Name	Validity	EL
	1089 9602 79	1	CONTACTOR 110 V	**(28/08/2017 - 20/08/2018)** ((((CAPPRM:AS1210 , CAPPRM:CE , CAPPRM:MHLW , CAPPRM:MOM) + MOVOL:400V , CAPPRM:CE + MOVOL:500V , CAPPRM:MHLW + MOVOL:200V) + FREQ:50HZ , (CAPPRM:ASME , CAPPRM:MHLW) + FREQ:60HZ + MOVOL:460V) + CAPPRE:IEC , (MOVOL:230V , MOVOL:460V , MOVOL:575V) + CAPPRE:ULCUL + CAPPRM:ASME + FREQ:60HZ) + COOL:AIR **(21/08/2018 - 10/12/2018)** ((((CAPPRM:AS1210 , CAPPRM:CE , CAPPRM:MHLW , CAPPRM:MOM) + MOVOL:400V , (CAPPRM:CE + MOVOL:500V , CAPPRM:MHLW + MOVOL:200V) + COOL:AIR) + FREQ:50HZ , (CAPPRM:ASME , CAPPRM:MHLW) + FREQ:60HZ + MOVOL:460V) + CAPPRE:IEC , ((MOVOL:230V , MOVOL:575V) + COOL:AIR , MOVOL:460V) + CAPPRE:ULCUL + CAPPRM:ASME + FREQ:60HZ) **(11/12/2018 - 11/12/2018)** ((((CAPPRM:AS1210 , CAPPRM:CE , CAPPRM:MHLW , CAPPRM:MOM) + MOVOL:400V , (CAPPRM:CE + MOVOL:500V , CAPPRM:MHLW + MOVOL:200V) + COOL:AIR) + FREQ:50HZ , (CAPPRM:ASME , CAPPRM:MHLW) + COOL:WATER + FREQ:60HZ + MOVOL:460V) + CAPPRE:IEC , ((MOVOL:230V , MOVOL:575V) + COOL:AIR , MOVOL:460V) + CAPPRE:ULCUL + CAPPRM:ASME + FREQ:60HZ)	K15
	1089 9461 26	1	PHASE SEQUENCE RELAY	**(28/08/2017 - 20/08/2018)** ((((CAPPRM:AS1210 , CAPPRM:CE , CAPPRM:MHLW , CAPPRM:MOM) + MOVOL:400V , CAPPRM:CE + MOVOL:500V , CAPPRM:MHLW + MOVOL:200V) + FREQ:50HZ , (CAPPRM:ASME , CAPPRM:MHLW) + FREQ:60HZ + MOVOL:460V) + CAPPRE:IEC , (MOVOL:230V , MOVOL:460V , MOVOL:575V) + CAPPRE:ULCUL + CAPPRM:ASME + FREQ:60HZ) + COOL:AIR **(21/08/2018 - 10/12/2018)** ((((CAPPRM:AS1210 , CAPPRM:CE , CAPPRM:MHLW , CAPPRM:MOM) + MOVOL:400V , (CAPPRM:CE + MOVOL:500V , CAPPRM:MHLW + MOVOL:200V) + COOL:AIR) + FREQ:50HZ , (CAPPRM:ASME , CAPPRM:MHLW) + FREQ:60HZ + MOVOL:460V) + CAPPRE:IEC , ((MOVOL:230V , MOVOL:575V) + COOL:AIR , MOVOL:460V) + CAPPRE:ULCUL + CAPPRM:ASME + FREQ:60HZ) **(11/12/2018 - 11/12/2018)** ((((CAPPRM:AS1210 , CAPPRM:CE , CAPPRM:MHLW , CAPPRM:MOM) + MOVOL:400V , (CAPPRM:CE + MOVOL:500V , CAPPRM:MHLW + MOVOL:200V) + COOL:AIR) + FREQ:50HZ , (CAPPRM:ASME , CAPPRM:MHLW) + COOL:WATER + FREQ:60HZ + MOVOL:460V) + CAPPRE:IEC , ((MOVOL:230V , MOVOL:575V) + COOL:AIR , MOVOL:460V) + CAPPRE:ULCUL + CAPPRM:ASME + FREQ:60HZ)	K25

Legend:

CAPPRE:IEC - Component approval electrical:IEC
CAPPRE:ULCUL - Component approval electrical:UL/cUL
CAPPRM:AS1210 - Component approval mechanical:AS1210
CAPPRM:ASME - Component approval mechanical:ASME
CAPPRM:CE - Component approval mechanical:CE
CAPPRM:MHLW - Component approval mechanical:MHLW
CAPPRM:MOM - Component approval mechanical:MOM
COOL:AIR - Cooling:Air cooled
COOL:WATER - Cooling:Water cooled
FREQ:50HZ - Frequency:50 Hz
FREQ:60HZ - Frequency:60 Hz
IDRY:Y - Integrated dryer:Yes
MODEL:GA75VP_16 - Model:GA 75VSD+
MOVOL:200V - Supply voltage:200 V
MOVOL:230V - Supply voltage:230 V
MOVOL:400V - Supply voltage:400 V
MOVOL:460V - Supply voltage:460 V
MOVOL:500V - Supply voltage:500 V
MOVOL:575V - Supply voltage:575 V

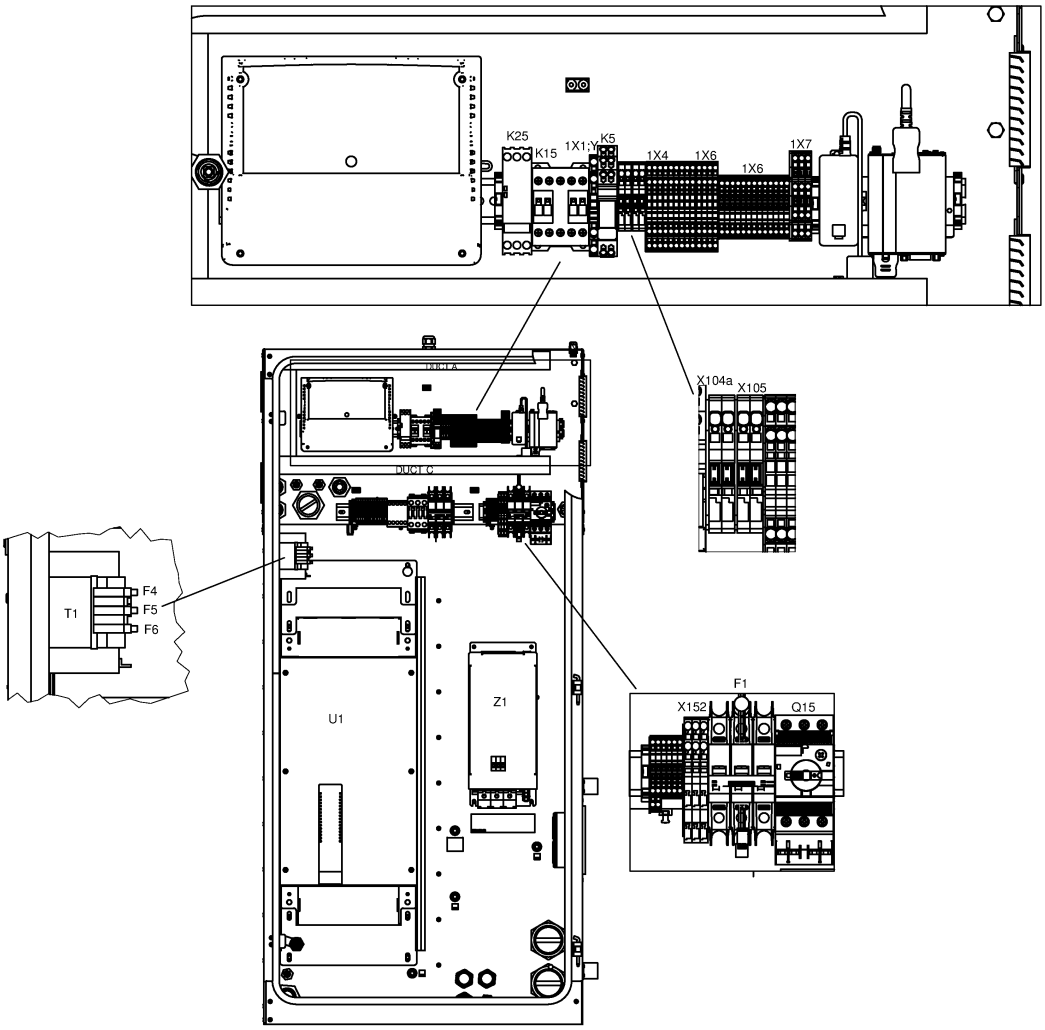
K25
K15
1X1:Y
K5
1X4
1X6
1X6
1X7
DUCT A
DUCT C
X104a
X105
T1
F4
F5
F6
U1
Z1
F1
X152
Q15

21.8 - Cubicle components GA 75L VSD+ - ((200V-400V-500V/50Hz, 460V/60Hz) - IEC, (230V-460V-575V/60Hz - UL-cUL)) - Full-Feature (28/08/2017 - 11/12/2018)

(((MOVOL:200V , MOVOL:400V , MOVOL:500V) + FREQ:50HZ , FREQ:60HZ + MOVOL:460V) + CAPPRE:IEC , (MOVOL:230V , MOVOL:460V , MOVOL:575V) + CAPPRE:ULCUL + FREQ:60HZ) + IDRY:Y + MODEL:GA75VP_16

Ref	Part Number	Qty	Name	Validity	EL
	1088 0032 17	1	RELAY 115 VAC	**(28/08/2017 - 20/08/2018)** ((((CAPPRM:AS1210 , CAPPRM:CE , CAPPRM:MHLW , CAPPRM:MOM) + MOVOL:400V , CAPPRM:CE + MOVOL:500V , CAPPRM:MHLW + MOVOL:200V) + FREQ:50HZ , (CAPPRM:ASME , CAPPRM:MHLW) + FREQ:60HZ + MOVOL:460V) + CAPPRE:IEC , (MOVOL:230V , MOVOL:460V , MOVOL:575V) + CAPPRE:ULCUL + CAPPRM:ASME + FREQ:60HZ) + COOL:AIR **(21/08/2018 - 10/12/2018)** ((((CAPPRM:AS1210 , CAPPRM:CE , CAPPRM:MHLW , CAPPRM:MOM) + MOVOL:400V , (CAPPRM:CE + MOVOL:500V , CAPPRM:MHLW + MOVOL:200V) + COOL:AIR) + FREQ:50HZ , (CAPPRM:ASME , CAPPRM:MHLW) + FREQ:60HZ + MOVOL:460V) + CAPPRE:IEC , ((MOVOL:230V , MOVOL:575V) + COOL:AIR , MOVOL:460V) + CAPPRE:ULCUL + CAPPRM:ASME + FREQ:60HZ) **(11/12/2018 - 11/12/2018)** ((((CAPPRM:AS1210 , CAPPRM:CE , CAPPRM:MHLW , CAPPRM:MOM) + MOVOL:400V , (CAPPRM:CE + MOVOL:500V , CAPPRM:MHLW + MOVOL:200V) + COOL:AIR) + FREQ:50HZ , (CAPPRM:ASME , CAPPRM:MHLW) + COOL:WATER + FREQ:60HZ + MOVOL:460V) + CAPPRE:IEC , ((MOVOL:230V , MOVOL:575V) + COOL:AIR , MOVOL:460V) + CAPPRE:ULCUL + CAPPRM:ASME + FREQ:60HZ)	K5
	0991 8011 21	AR	CABLE TRAY	**(28/08/2017 - 20/08/2018)** ((((CAPPRM:AS1210 , CAPPRM:CE , CAPPRM:MHLW , CAPPRM:MOM) + MOVOL:400V , CAPPRM:CE + MOVOL:500V , CAPPRM:MHLW + MOVOL:200V) + FREQ:50HZ , (CAPPRM:ASME , CAPPRM:MHLW) + FREQ:60HZ + MOVOL:460V) + CAPPRE:IEC , (MOVOL:230V , MOVOL:460V , MOVOL:575V) + CAPPRE:ULCUL + CAPPRM:ASME + FREQ:60HZ) + COOL:AIR **(21/08/2018 - 10/12/2018)** ((((CAPPRM:AS1210 , CAPPRM:CE , CAPPRM:MHLW , CAPPRM:MOM) + MOVOL:400V , (CAPPRM:CE + MOVOL:500V , CAPPRM:MHLW + MOVOL:200V) + COOL:AIR) + FREQ:50HZ , (CAPPRM:ASME , CAPPRM:MHLW) + FREQ:60HZ + MOVOL:460V) + CAPPRE:IEC , ((MOVOL:230V , MOVOL:575V) + COOL:AIR , MOVOL:460V) + CAPPRE:ULCUL + CAPPRM:ASME + FREQ:60HZ) **(11/12/2018 - 11/12/2018)** ((((CAPPRM:AS1210 , CAPPRM:CE , CAPPRM:MHLW , CAPPRM:MOM) + MOVOL:400V , (CAPPRM:CE + MOVOL:500V , CAPPRM:MHLW + MOVOL:200V) + COOL:AIR) + FREQ:50HZ , (CAPPRM:ASME , CAPPRM:MHLW) + COOL:WATER + FREQ:60HZ + MOVOL:460V) + CAPPRE:IEC , ((MOVOL:230V , MOVOL:575V) + COOL:AIR , MOVOL:460V) + CAPPRE:ULCUL + CAPPRM:ASME + FREQ:60HZ)	L=1384mm

Legend:

CAPPRE:IEC - Component approval electrical:IEC
CAPPRM:ASME - Component approval mechanical:ASME
CAPPRM:MOM - Component approval mechanical:MOM
FREQ:50HZ - Frequency:50 Hz
MODEL:GA75VP_16 - Model:GA 75VSD+
MOVOL:400V - Supply voltage:400 V
MOVOL:575V - Supply voltage:575 V
CAPPRE:ULCUL - Component approval electrical:UL/cUL
CAPPRM:CE - Component approval mechanical:CE
COOL:AIR - Cooling:Air cooled
FREQ:60HZ - Frequency:60 Hz
MOVOL:200V - Supply voltage:200 V
MOVOL:460V - Supply voltage:460 V
CAPPRM:AS1210 - Component approval mechanical:AS1210
CAPPRM:MHLW - Component approval mechanical:MHLW
COOL:WATER - Cooling:Water cooled
IDRY:Y - Integrated dryer:Yes
MOVOL:230V - Supply voltage:230 V
MOVOL:500V - Supply voltage:500 V

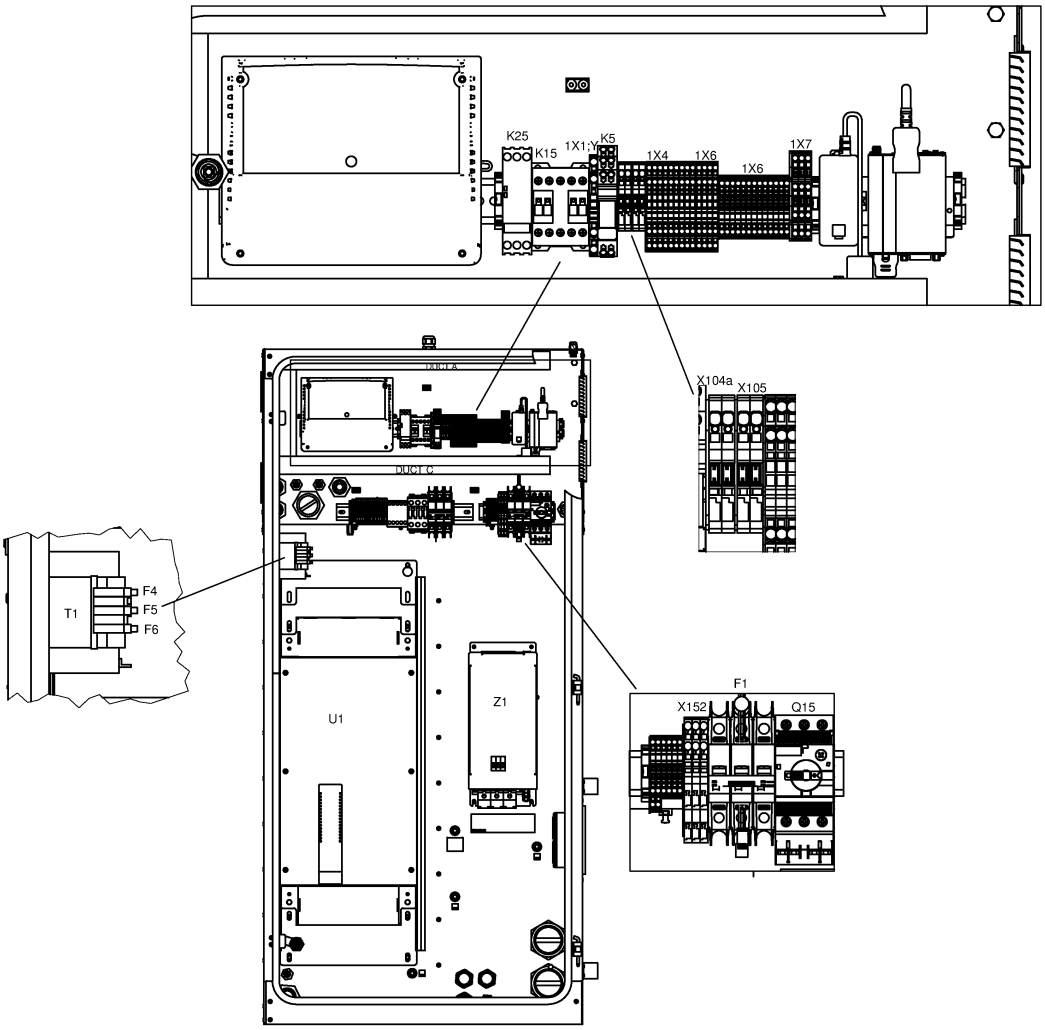
K25
K15
1X1:Y
K5
1X4
1X6
1X6
1X7
DUCT A
DUCT C
X104a
X105
T1
F4
F5
F6
U1
Z1
F1
X152
Q15

21.8 - Cubicle components GA 75L VSD+ - ((200V-400V-500V/50Hz, 460V/60Hz) - IEC, (230V-460V-575V/60Hz - UL-cUL)) - Full-Feature (28/08/2017 - 11/12/2018)

(((MOVOL:200V , MOVOL:400V , MOVOL:500V) + FREQ:50HZ , FREQ:60HZ + MOVOL:460V) + CAPPRE:IEC , (MOVOL:230V , MOVOL:460V , MOVOL:575V) + CAPPRE:ULCUL + FREQ:60HZ) + IDRY:Y + MODEL:GA75VP_16

Ref	Part Number	Qty	Name	Validity	EL
	1900 2203 02	1	DRYER RAIL	**(28/08/2017 - 20/08/2018)** ((((CAPPRM:AS1210 , CAPPRM:CE , CAPPRM:MHLW , CAPPRM:MOM) + MOVOL:400V , CAPPRM:CE + MOVOL:500V , CAPPRM:MHLW + MOVOL:200V) + FREQ:50HZ , (CAPPRM:ASME , CAPPRM:MHLW) + FREQ:60HZ + MOVOL:460V) + CAPPRE:IEC , (MOVOL:230V , MOVOL:460V , MOVOL:575V) + CAPPRE:ULCUL + CAPPRM:ASME + FREQ:60HZ) + COOL:AIR **(21/08/2018 - 10/12/2018)** ((((CAPPRM:AS1210 , CAPPRM:CE , CAPPRM:MHLW , CAPPRM:MOM) + MOVOL:400V , (CAPPRM:CE + MOVOL:500V , CAPPRM:MHLW + MOVOL:200V) + COOL:AIR) + FREQ:50HZ , (CAPPRM:ASME , CAPPRM:MHLW) + FREQ:60HZ + MOVOL:460V) + CAPPRE:IEC , ((MOVOL:230V , MOVOL:575V) + COOL:AIR , MOVOL:460V) + CAPPRE:ULCUL + CAPPRM:ASME + FREQ:60HZ) **(11/12/2018 - 11/12/2018)** ((((CAPPRM:AS1210 , CAPPRM:CE , CAPPRM:MHLW , CAPPRM:MOM) + MOVOL:400V , (CAPPRM:CE + MOVOL:500V , CAPPRM:MHLW + MOVOL:200V) + COOL:AIR) + FREQ:50HZ , (CAPPRM:ASME , CAPPRM:MHLW) + COOL:WATER + FREQ:60HZ + MOVOL:460V) + CAPPRE:IEC , ((MOVOL:230V , MOVOL:575V) + COOL:AIR , MOVOL:460V) + CAPPRE:ULCUL + CAPPRM:ASME + FREQ:60HZ)	
	Electrical legend:	Without trafo on dryer			
	1088 0031 13	1	CONNECTOR 13-POLE	**(28/08/2017 - 20/08/2018)** ((((CAPPRM:AS1210 , CAPPRM:CE , CAPPRM:MHLW , CAPPRM:MOM) + MOVOL:400V , CAPPRM:CE + MOVOL:500V , CAPPRM:MHLW + MOVOL:200V) + FREQ:50HZ , (CAPPRM:ASME , CAPPRM:MHLW) + FREQ:60HZ + MOVOL:460V) + CAPPRE:IEC , (MOVOL:230V , MOVOL:460V , MOVOL:575V) + CAPPRE:ULCUL + CAPPRM:ASME + FREQ:60HZ) + COOL:AIR **(21/08/2018 - 10/12/2018)** ((((CAPPRM:AS1210 , CAPPRM:CE , CAPPRM:MHLW , CAPPRM:MOM) + MOVOL:400V , (CAPPRM:CE + MOVOL:500V , CAPPRM:MHLW + MOVOL:200V) + COOL:AIR) + FREQ:50HZ , (CAPPRM:ASME , CAPPRM:MHLW) + FREQ:60HZ + MOVOL:460V) + CAPPRE:IEC , ((MOVOL:230V , MOVOL:575V) + COOL:AIR , MOVOL:460V) + CAPPRE:ULCUL + CAPPRM:ASME + FREQ:60HZ) **(11/12/2018 - 11/12/2018)** ((((CAPPRM:AS1210 , CAPPRM:CE , CAPPRM:MHLW , CAPPRM:MOM) + MOVOL:400V , (CAPPRM:CE + MOVOL:500V , CAPPRM:MHLW + MOVOL:200V) + COOL:AIR) + FREQ:50HZ , (CAPPRM:ASME , CAPPRM:MHLW) + COOL:WATER + FREQ:60HZ + MOVOL:460V) + CAPPRE:IEC , ((MOVOL:230V , MOVOL:575V) + COOL:AIR , MOVOL:460V) + CAPPRE:ULCUL + CAPPRM:ASME + FREQ:60HZ)	1X30

Legend:

CAPPRE:IEC - Component approval electrical:IEC
CAPPRE:ULCUL - Component approval electrical:UL/cUL
CAPPRM:AS1210 - Component approval mechanical:AS1210
CAPPRM:ASME - Component approval mechanical:ASME
CAPPRM:CE - Component approval mechanical:CE
CAPPRM:MHLW - Component approval mechanical:MHLW
CAPPRM:MOM - Component approval mechanical:MOM
COOL:AIR - Cooling:Air cooled
COOL:WATER - Cooling:Water cooled
FREQ:50HZ - Frequency:50 Hz
FREQ:60HZ - Frequency:60 Hz
IDRY:Y - Integrated dryer:Yes
MODEL:GA75VP_16 - Model:GA 75VSD+
MOVOL:200V - Supply voltage:200 V
MOVOL:230V - Supply voltage:230 V
MOVOL:400V - Supply voltage:400 V
MOVOL:460V - Supply voltage:460 V
MOVOL:500V - Supply voltage:500 V
MOVOL:575V - Supply voltage:575 V

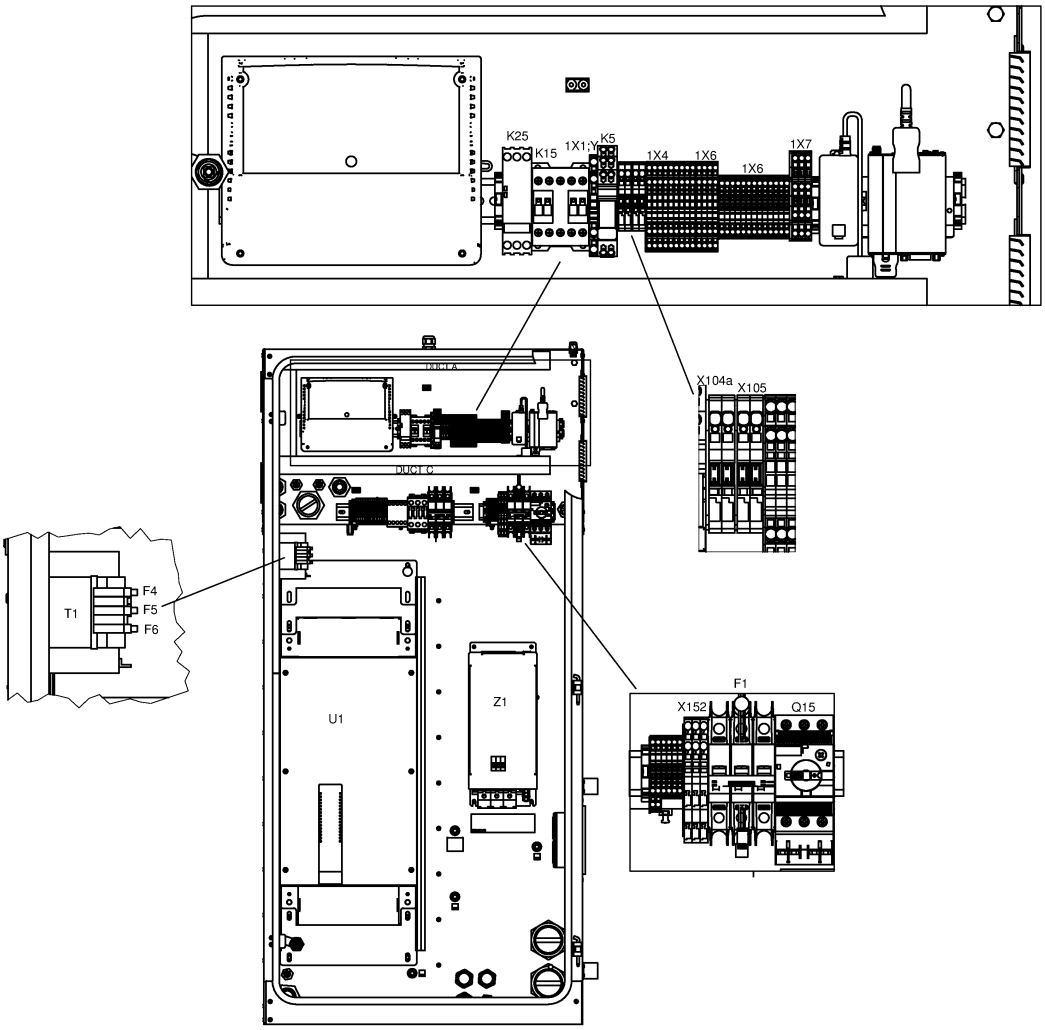
K25
K15
1X1:Y
K5
1X4
1X6
1X6
1X7
DUCT A
DUCT C
X104a
X105
T1
F4
F5
F6
U1
Z1
F1
X152
Q15

21.8 - Cubicle components GA 75L VSD+ - ((200V-400V-500V/50Hz, 460V/60Hz) - IEC, (230V-460V-575V/60Hz - UL-cUL)) - Full-Feature (28/08/2017 - 11/12/2018)

(((MOVOL:200V , MOVOL:400V , MOVOL:500V) + FREQ:50HZ , FREQ:60HZ + MOVOL:460V) + CAPPRE:IEC , (MOVOL:230V , MOVOL:460V , MOVOL:575V) + CAPPRE:ULCUL + FREQ:60HZ) + IDRY:Y + MODEL:GA75VP_16

Ref	Part Number	Qty	Name	Validity	EL
	1088 0037 82	1	CONNECTOR	**(28/08/2017 - 20/08/2018)** ((((CAPPRM:AS1210 , CAPPRM:CE , CAPPRM:MHLW , CAPPRM:MOM) + MOVOL:400V , CAPPRM:CE + MOVOL:500V , CAPPRM:MHLW + MOVOL:200V) + FREQ:50HZ , (CAPPRM:ASME , CAPPRM:MHLW) + FREQ:60HZ + MOVOL:460V) + CAPPRE:IEC , (MOVOL:230V , MOVOL:460V , MOVOL:575V) + CAPPRE:ULCUL + CAPPRM:ASME + FREQ:60HZ) + COOL:AIR **(21/08/2018 - 10/12/2018)** ((((CAPPRM:AS1210 , CAPPRM:CE , CAPPRM:MHLW , CAPPRM:MOM) + MOVOL:400V , (CAPPRM:CE + MOVOL:500V , CAPPRM:MHLW + MOVOL:200V) + COOL:AIR) + FREQ:50HZ , (CAPPRM:ASME , CAPPRM:MHLW) + FREQ:60HZ + MOVOL:460V) + CAPPRE:IEC , ((MOVOL:230V , MOVOL:575V) + COOL:AIR , MOVOL:460V) + CAPPRE:ULCUL + CAPPRM:ASME + FREQ:60HZ) **(11/12/2018 - 11/12/2018)** ((((CAPPRM:AS1210 , CAPPRM:CE , CAPPRM:MHLW , CAPPRM:MOM) + MOVOL:400V , (CAPPRM:CE + MOVOL:500V , CAPPRM:MHLW + MOVOL:200V) + COOL:AIR) + FREQ:50HZ , (CAPPRM:ASME , CAPPRM:MHLW) + COOL:WATER + FREQ:60HZ + MOVOL:460V) + CAPPRE:IEC , ((MOVOL:230V , MOVOL:575V) + COOL:AIR , MOVOL:460V) + CAPPRE:ULCUL + CAPPRM:ASME + FREQ:60HZ)	3X34
	0697 9811 13	1	PLUG	**(28/08/2017 - 20/08/2018)** ((((CAPPRM:AS1210 , CAPPRM:CE , CAPPRM:MHLW , CAPPRM:MOM) + MOVOL:400V , CAPPRM:CE + MOVOL:500V , CAPPRM:MHLW + MOVOL:200V) + FREQ:50HZ , (CAPPRM:ASME , CAPPRM:MHLW) + FREQ:60HZ + MOVOL:460V) + CAPPRE:IEC , (MOVOL:230V , MOVOL:460V , MOVOL:575V) + CAPPRE:ULCUL + CAPPRM:ASME + FREQ:60HZ) + COOL:AIR **(21/08/2018 - 10/12/2018)** ((((CAPPRM:AS1210 , CAPPRM:CE , CAPPRM:MHLW , CAPPRM:MOM) + MOVOL:400V , (CAPPRM:CE + MOVOL:500V , CAPPRM:MHLW + MOVOL:200V) + COOL:AIR) + FREQ:50HZ , (CAPPRM:ASME , CAPPRM:MHLW) + FREQ:60HZ + MOVOL:460V) + CAPPRE:IEC , ((MOVOL:230V , MOVOL:575V) + COOL:AIR , MOVOL:460V) + CAPPRE:ULCUL + CAPPRM:ASME + FREQ:60HZ) **(11/12/2018 - 11/12/2018)** ((((CAPPRM:AS1210 , CAPPRM:CE , CAPPRM:MHLW , CAPPRM:MOM) + MOVOL:400V , (CAPPRM:CE + MOVOL:500V , CAPPRM:MHLW + MOVOL:200V) + COOL:AIR) + FREQ:50HZ , (CAPPRM:ASME , CAPPRM:MHLW) + COOL:WATER + FREQ:60HZ + MOVOL:460V) + CAPPRE:IEC , ((MOVOL:230V , MOVOL:575V) + COOL:AIR , MOVOL:460V) + CAPPRE:ULCUL + CAPPRM:ASME + FREQ:60HZ)	

Electrical legend: Energy recovery

Legend:

CAPPRE:IEC - Component approval electrical:IEC
CAPPRM:ASME - Component approval mechanical:ASME
CAPPRM:MOM - Component approval mechanical:MOM
FREQ:50HZ - Frequency:50 Hz
MODEL:GA75VP_16 - Model:GA 75VSD+
MOVOL:400V - Supply voltage:400 V
MOVOL:575V - Supply voltage:575 V
CAPPRE:ULCUL - Component approval electrical:UL/cUL
CAPPRM:CE - Component approval mechanical:CE
COOL:AIR - Cooling:Air cooled
FREQ:60HZ - Frequency:60 Hz
MOVOL:200V - Supply voltage:200 V
MOVOL:460V - Supply voltage:460 V
CAPPRM:AS1210 - Component approval mechanical:AS1210
CAPPRM:MHLW - Component approval mechanical:MHLW
COOL:WATER - Cooling:Water cooled
IDRY:Y - Integrated dryer:Yes
MOVOL:230V - Supply voltage:230 V
MOVOL:500V - Supply voltage:500 V

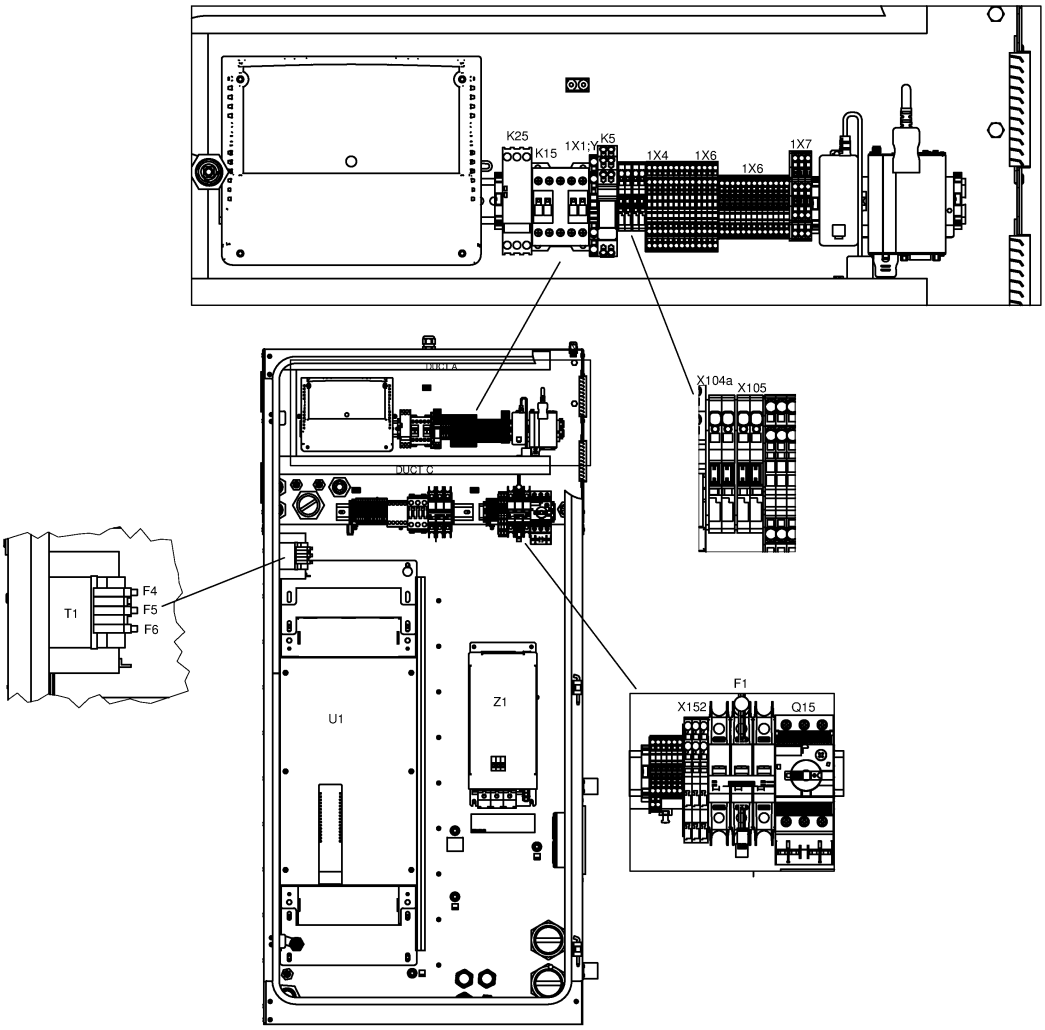
K25
K15
1X1:Y
K5
1X4
1X6
1X6
1X7
DUCT A
DUCT C
X104a
X105
T1
F4
F5
F6
U1
Z1
F1
X152
Q15

21.8 - Cubicle components GA 75L VSD+ - ((200V-400V-500V/50Hz, 460V/60Hz) - IEC, (230V-460V-575V/60Hz - UL-cUL)) - Full-Feature (28/08/2017 - 11/12/2018)

(((MOVOL:200V , MOVOL:400V , MOVOL:500V) + FREQ:50HZ , FREQ:60HZ + MOVOL:460V) + CAPPRE:IEC , (MOVOL:230V , MOVOL:460V , MOVOL:575V) + CAPPRE:ULCUL + FREQ:60HZ) + IDRY:Y + MODEL:GA75VP_16

Ref	Part Number	Qty	Name	Validity	EL
	0989 3700 44	1	LOCKNUT	**(28/08/2017 - 20/08/2018)** ((((CAPPRM:AS1210 , CAPPRM:CE , CAPPRM:MHLW , CAPPRM:MOM) + MOVOL:400V , CAPPRM:CE + MOVOL:500V , CAPPRM:MHLW + MOVOL:200V) + FREQ:50HZ , (CAPPRM:ASME , CAPPRM:MHLW) + FREQ:60HZ + MOVOL:460V) + CAPPRE:IEC , (MOVOL:230V , MOVOL:460V , MOVOL:575V) + CAPPRE:ULCUL + CAPPRM:ASME + FREQ:60HZ) + COOL:AIR **(21/08/2018 - 10/12/2018)** ((((CAPPRM:AS1210 , CAPPRM:CE , CAPPRM:MHLW , CAPPRM:MOM) + MOVOL:400V , (CAPPRM:CE + MOVOL:500V , CAPPRM:MHLW + MOVOL:200V) + COOL:AIR) + FREQ:50HZ , (CAPPRM:ASME , CAPPRM:MHLW) + FREQ:60HZ + MOVOL:460V) + CAPPRE:IEC , ((MOVOL:230V , MOVOL:575V) + COOL:AIR , MOVOL:460V) + CAPPRE:ULCUL + CAPPRM:ASME + FREQ:60HZ) **(11/12/2018 - 11/12/2018)** ((((CAPPRM:AS1210 , CAPPRM:CE , CAPPRM:MHLW , CAPPRM:MOM) + MOVOL:400V , (CAPPRM:CE + MOVOL:500V , CAPPRM:MHLW + MOVOL:200V) + COOL:AIR) + FREQ:50HZ , (CAPPRM:ASME , CAPPRM:MHLW) + COOL:WATER + FREQ:60HZ + MOVOL:460V) + CAPPRE:IEC , ((MOVOL:230V , MOVOL:575V) + COOL:AIR , MOVOL:460V) + CAPPRE:ULCUL + CAPPRM:ASME + FREQ:60HZ)	
	Electrical legend:	Energy recovery			
	0697 9811 12	1	PLUG	**(28/08/2017 - 20/08/2018)** ((((CAPPRM:AS1210 , CAPPRM:CE , CAPPRM:MHLW , CAPPRM:MOM) + MOVOL:400V , CAPPRM:CE + MOVOL:500V , CAPPRM:MHLW + MOVOL:200V) + FREQ:50HZ , (CAPPRM:ASME , CAPPRM:MHLW) + FREQ:60HZ + MOVOL:460V) + CAPPRE:IEC , (MOVOL:230V , MOVOL:460V , MOVOL:575V) + CAPPRE:ULCUL + CAPPRM:ASME + FREQ:60HZ) + COOL:AIR **(21/08/2018 - 10/12/2018)** ((((CAPPRM:AS1210 , CAPPRM:CE , CAPPRM:MHLW , CAPPRM:MOM) + MOVOL:400V , (CAPPRM:CE + MOVOL:500V , CAPPRM:MHLW + MOVOL:200V) + COOL:AIR) + FREQ:50HZ , (CAPPRM:ASME , CAPPRM:MHLW) + FREQ:60HZ + MOVOL:460V) + CAPPRE:IEC , ((MOVOL:230V , MOVOL:575V) + COOL:AIR , MOVOL:460V) + CAPPRE:ULCUL + CAPPRM:ASME + FREQ:60HZ) **(11/12/2018 - 11/12/2018)** ((((CAPPRM:AS1210 , CAPPRM:CE , CAPPRM:MHLW , CAPPRM:MOM) + MOVOL:400V , (CAPPRM:CE + MOVOL:500V , CAPPRM:MHLW + MOVOL:200V) + COOL:AIR) + FREQ:50HZ , (CAPPRM:ASME , CAPPRM:MHLW) + COOL:WATER + FREQ:60HZ + MOVOL:460V) + CAPPRE:IEC , ((MOVOL:230V , MOVOL:575V) + COOL:AIR , MOVOL:460V) + CAPPRE:ULCUL + CAPPRM:ASME + FREQ:60HZ)	
	Electrical legend:	Control circuit of T10			

Legend:

CAPPRE:IEC - Component approval electrical:IEC
CAPPRM:ASME - Component approval mechanical:ASME
CAPPRM:MOM - Component approval mechanical:MOM
FREQ:50HZ - Frequency:50 Hz
MODEL:GA75VP_16 - Model:GA 75VSD+
MOVOL:400V - Supply voltage:400 V
MOVOL:575V - Supply voltage:575 V
CAPPRE:ULCUL - Component approval electrical:UL/cUL
CAPPRM:CE - Component approval mechanical:CE
COOL:AIR - Cooling:Air cooled
FREQ:60HZ - Frequency:60 Hz
MOVOL:200V - Supply voltage:200 V
MOVOL:460V - Supply voltage:460 V
CAPPRM:AS1210 - Component approval mechanical:AS1210
CAPPRM:MHLW - Component approval mechanical:MHLW
COOL:WATER - Cooling:Water cooled
IDRY:Y - Integrated dryer:Yes
MOVOL:230V - Supply voltage:230 V
MOVOL:500V - Supply voltage:500 V

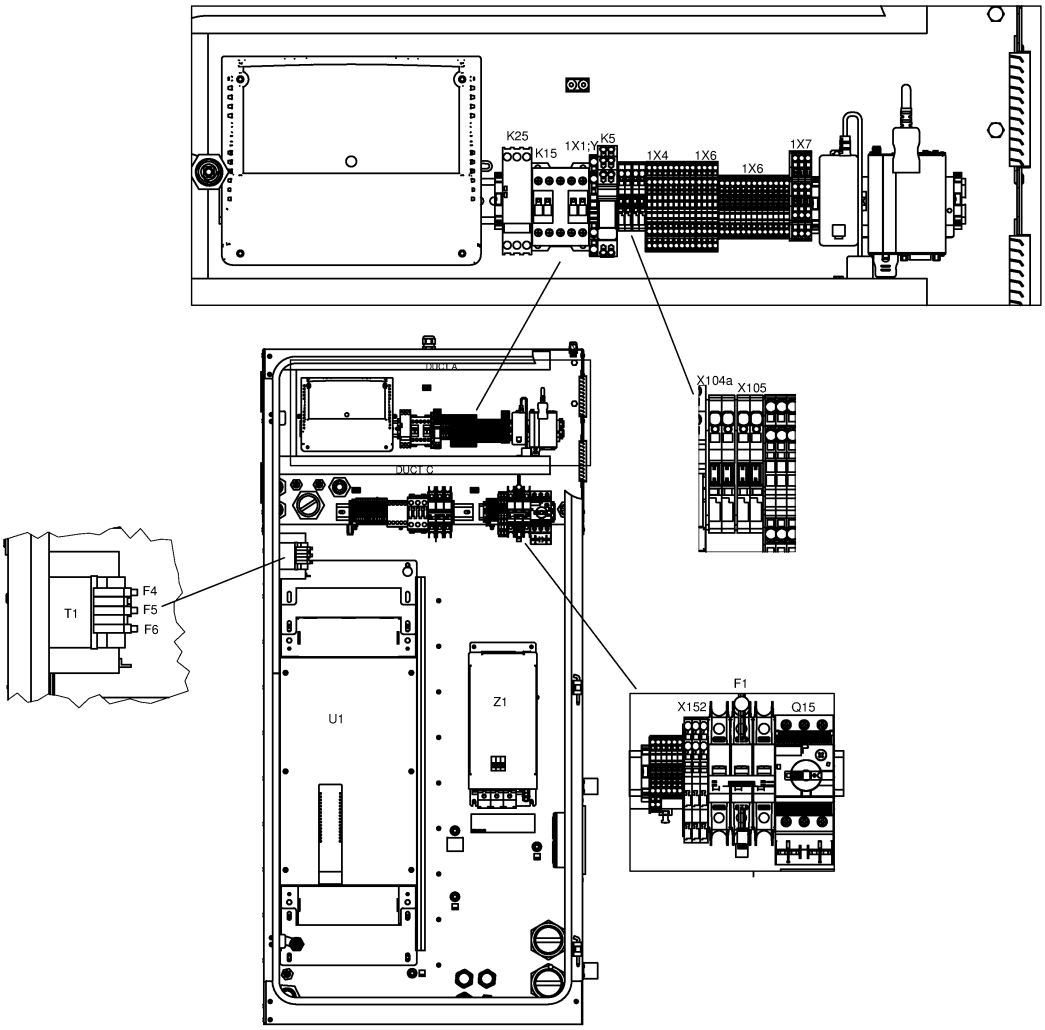
K25
K15
1X1:Y
K5
1X4
1X6
1X6
1X7
DUCT A
DUCT C
X104a
X105
T1
F4
F5
F6
U1
Z1
F1
X152
Q15

21.8 - Cubicle components GA 75L VSD+ - ((200V-400V-500V/50Hz, 460V/60Hz) - IEC, (230V-460V-575V/60Hz - UL-cUL)) - Full-Feature (28/08/2017 - 11/12/2018)

(((MOVOL:200V , MOVOL:400V , MOVOL:500V) + FREQ:50HZ , FREQ:60HZ + MOVOL:460V) + CAPPRE:IEC , (MOVOL:230V , MOVOL:460V , MOVOL:575V) + CAPPRE:ULCUL + FREQ:60HZ) + IDRY:Y + MODEL:GA75VP_16

Ref	Part Number	Qty	Name	Validity	EL
	0989 3700 43	1	NUT	**(28/08/2017 - 20/08/2018)** ((((CAPPRM:AS1210 , CAPPRM:CE , CAPPRM:MHLW , CAPPRM:MOM) + MOVOL:400V , CAPPRM:CE + MOVOL:500V , CAPPRM:MHLW + MOVOL:200V) + FREQ:50HZ , (CAPPRM:ASME , CAPPRM:MHLW) + FREQ:60HZ + MOVOL:460V) + CAPPRE:IEC , (MOVOL:230V , MOVOL:460V , MOVOL:575V) + CAPPRE:ULCUL + CAPPRM:ASME + FREQ:60HZ) + COOL:AIR **(21/08/2018 - 10/12/2018)** ((((CAPPRM:AS1210 , CAPPRM:CE , CAPPRM:MHLW , CAPPRM:MOM) + MOVOL:400V , (CAPPRM:CE + MOVOL:500V , CAPPRM:MHLW + MOVOL:200V) + COOL:AIR) + FREQ:50HZ , (CAPPRM:ASME , CAPPRM:MHLW) + FREQ:60HZ + MOVOL:460V) + CAPPRE:IEC , ((MOVOL:230V , MOVOL:575V) + COOL:AIR , MOVOL:460V) + CAPPRE:ULCUL + CAPPRM:ASME + FREQ:60HZ) **(11/12/2018 - 11/12/2018)** ((((CAPPRM:AS1210 , CAPPRM:CE , CAPPRM:MHLW , CAPPRM:MOM) + MOVOL:400V , (CAPPRM:CE + MOVOL:500V , CAPPRM:MHLW + MOVOL:200V) + COOL:AIR) + FREQ:50HZ , (CAPPRM:ASME , CAPPRM:MHLW) + COOL:WATER + FREQ:60HZ + MOVOL:460V) + CAPPRE:IEC , ((MOVOL:230V , MOVOL:575V) + COOL:AIR , MOVOL:460V) + CAPPRE:ULCUL + CAPPRM:ASME + FREQ:60HZ)	

Electrical legend: Control circuit of T10

Legend:

CAPPRE:IEC - Component approval electrical:IEC
CAPPRE:ULCUL - Component approval electrical:UL/cUL
CAPPRM:AS1210 - Component approval mechanical:AS1210
CAPPRM:ASME - Component approval mechanical:ASME
CAPPRM:CE - Component approval mechanical:CE
CAPPRM:MHLW - Component approval mechanical:MHLW
CAPPRM:MOM - Component approval mechanical:MOM
COOL:AIR - Cooling:Air cooled
COOL:WATER - Cooling:Water cooled
FREQ:50HZ - Frequency:50 Hz
FREQ:60HZ - Frequency:60 Hz
IDRY:Y - Integrated dryer:Yes
MODEL:GA75VP_16 - Model:GA 75VSD+
MOVOL:200V - Supply voltage:200 V
MOVOL:230V - Supply voltage:230 V
MOVOL:400V - Supply voltage:400 V
MOVOL:460V - Supply voltage:460 V
MOVOL:500V - Supply voltage:500 V
MOVOL:575V - Supply voltage:575 V

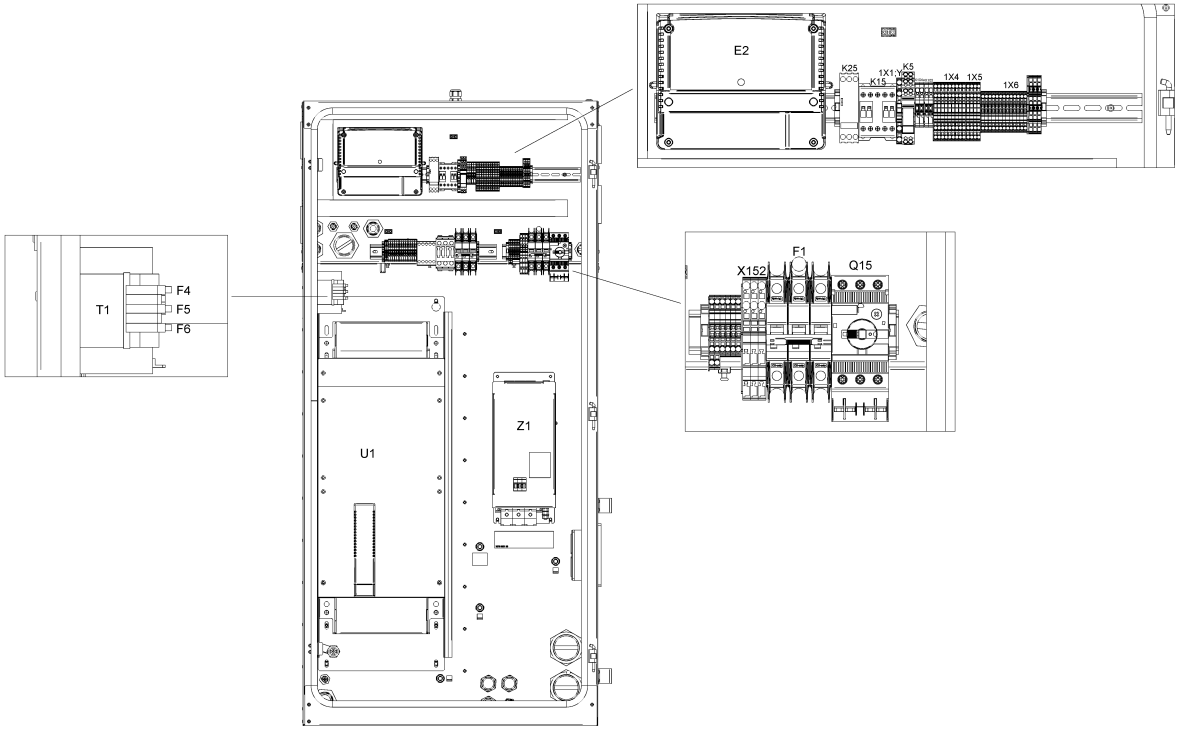
E2
K25
K15
1X1:Y
K5
1X4
1X5
1X6
T1
F4
F5
F6
U1
Z1
X152
F1
Q15

21.9 - Cubicle components GA 75L VSD+ - ((200V-400V-500V/50Hz, 460V/60Hz) - IEC, (230V-460V-575V/60Hz - UL-cUL)) - Full-Feature (12/12/2018 - 27/11/2019)

(((MOVOL:200V , MOVOL:400V , MOVOL:500V) + FREQ:50HZ , FREQ:60HZ + MOVOL:460V) + CAPPRE:IEC , (MOVOL:230V , MOVOL:460V , MOVOL:575V) + CAPPRE:ULCUL + FREQ:60HZ) + IDRY:Y + MODEL:GA75VP_16

Ref	Part Number	Qty	Name	Validity	EL
	1900 2202 23	1	CUBICLE	**(12/12/2018 - 27/11/2019)**	
	9820 3000 31	1	ASSEMBLY DRAWING	**(12/12/2018 - 24/02/2019)** ((((CAPPRM:AS1210 , CAPPRM:CE , CAPPRM:MHLW , CAPPRM:MOM) + MOVOL:400V , (CAPPRM:CE + MOVOL:500V , CAPPRM:MHLW + MOVOL:200V) + COOL:AIR) + FREQ:50HZ , (CAPPRM:ASME , CAPPRM:MHLW) + FREQ:60HZ + MOVOL:460V) + CAPPRE:IEC , ((MOVOL:230V , MOVOL:575V) + COOL:AIR , MOVOL:460V) + CAPPRE:ULCUL + CAPPRM:ASME + FREQ:60HZ) **(25/02/2019 - 24/07/2019)** (((((CAPPRM:AS1210 , CAPPRM:CE , CAPPRM:MHLW , CAPPRM:MOM) + MOVOL:400V , CAPPRM:CE + MOVOL:500V , CAPPRM:MHLW + MOVOL:200V) + FREQ:50HZ , (CAPPRM:ASME , CAPPRM:MHLW) + FREQ:60HZ + MOVOL:460V) + CAPPRE:IEC , (MOVOL:230V , MOVOL:460V , MOVOL:575V) + CAPPRE:ULCUL + CAPPRM:ASME + FREQ:60HZ) + COOL:AIR , CAPPRE:IEC + CAPPRM:MHLW + COOL:WATER + FREQ:60HZ + MOVOL:460V) **(25/07/2019 - 27/11/2019)** ((((CAPPRM:AS1210 , CAPPRM:CE , CAPPRM:MHLW , CAPPRM:MOM) + MOVOL:400V , CAPPRM:CE + MOVOL:500V , CAPPRM:MHLW + MOVOL:200V) + FREQ:50HZ , (CAPPRM:ASME , CAPPRM:MHLW) + FREQ:60HZ + MOVOL:460V) + CAPPRE:IEC , (MOVOL:230V , MOVOL:460V , MOVOL:575V) + CAPPRE:ULCUL + CAPPRM:ASME + FREQ:60HZ) + COOL:AIR	AD
	9820 3000 27	1	SERVICE DIAGRAM	**(12/12/2018 - 24/02/2019)** ((((CAPPRM:AS1210 , CAPPRM:CE , CAPPRM:MHLW , CAPPRM:MOM) + MOVOL:400V , (CAPPRM:CE + MOVOL:500V , CAPPRM:MHLW + MOVOL:200V) + COOL:AIR) + FREQ:50HZ , (CAPPRM:ASME , CAPPRM:MHLW) + FREQ:60HZ + MOVOL:460V) + CAPPRE:IEC , ((MOVOL:230V , MOVOL:575V) + COOL:AIR , MOVOL:460V) + CAPPRE:ULCUL + CAPPRM:ASME + FREQ:60HZ) **(25/02/2019 - 24/07/2019)** (((((CAPPRM:AS1210 , CAPPRM:CE , CAPPRM:MHLW , CAPPRM:MOM) + MOVOL:400V , CAPPRM:CE + MOVOL:500V , CAPPRM:MHLW + MOVOL:200V) + FREQ:50HZ , (CAPPRM:ASME , CAPPRM:MHLW) + FREQ:60HZ + MOVOL:460V) + CAPPRE:IEC , (MOVOL:230V , MOVOL:460V , MOVOL:575V) + CAPPRE:ULCUL + CAPPRM:ASME + FREQ:60HZ) + COOL:AIR , CAPPRE:IEC + CAPPRM:MHLW + COOL:WATER + FREQ:60HZ + MOVOL:460V) **(25/07/2019 - 27/11/2019)** ((((CAPPRM:AS1210 , CAPPRM:CE , CAPPRM:MHLW , CAPPRM:MOM) + MOVOL:400V , CAPPRM:CE + MOVOL:500V , CAPPRM:MHLW + MOVOL:200V) + FREQ:50HZ , (CAPPRM:ASME , CAPPRM:MHLW) + FREQ:60HZ + MOVOL:460V) + CAPPRE:IEC , (MOVOL:230V , MOVOL:460V , MOVOL:575V) + CAPPRE:ULCUL + CAPPRM:ASME + FREQ:60HZ) + COOL:AIR	SD

Legend:

CAPPRE:IEC - Component approval electrical:IEC
CAPPRE:ULCUL - Component approval electrical:UL/cUL
CAPPRM:AS1210 - Component approval mechanical:AS1210
CAPPRM:ASME - Component approval mechanical:ASME
CAPPRM:CE - Component approval mechanical:CE
CAPPRM:MHLW - Component approval mechanical:MHLW
CAPPRM:MOM - Component approval mechanical:MOM
COOL:AIR - Cooling:Air cooled
COOL:WATER - Cooling:Water cooled
FREQ:50HZ - Frequency:50 Hz
FREQ:60HZ - Frequency:60 Hz
IDRY:Y - Integrated dryer:Yes
MODEL:GA75VP_16 - Model:GA 75VSD+
MOVOL:200V - Supply voltage:200 V
MOVOL:230V - Supply voltage:230 V
MOVOL:400V - Supply voltage:400 V
MOVOL:460V - Supply voltage:460 V
MOVOL:500V - Supply voltage:500 V
MOVOL:575V - Supply voltage:575 V

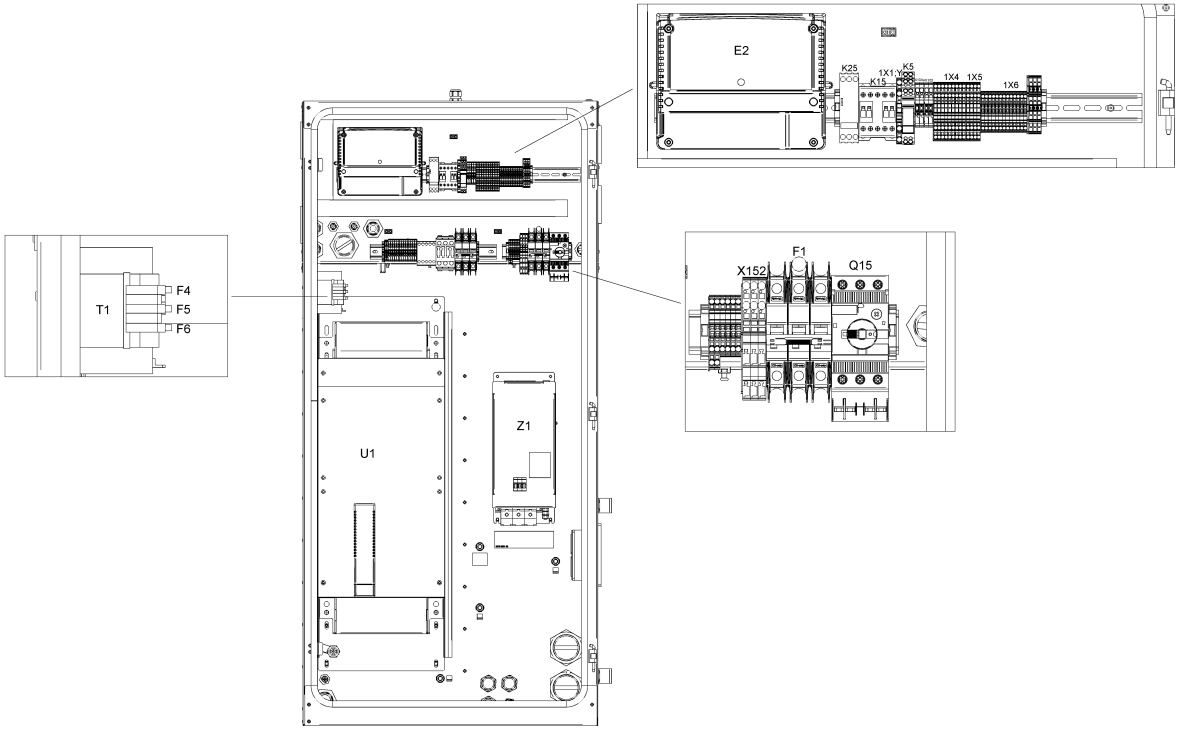
E2
K25
K15
1X1:Y
K5
1X4
1X5
1X6
T1
F4
F5
F6
U1
Z1
X152
F1
Q15

21.9 - Cubicle components GA 75L VSD+ - ((200V-400V-500V/50Hz, 460V/60Hz) - IEC, (230V-460V-575V/60Hz - UL-cUL)) - Full-Feature (12/12/2018 - 27/11/2019)

(((MOVOL:200V , MOVOL:400V , MOVOL:500V) + FREQ:50HZ , FREQ:60HZ + MOVOL:460V) + CAPPRE:IEC , (MOVOL:230V , MOVOL:460V , MOVOL:575V) + CAPPRE:ULCUL + FREQ:60HZ) + IDRY:Y + MODEL:GA75VP_16

Ref	Part Number	Qty	Name	Validity	EL
	1622 3798 72	1	WIRE HARNESS	**(12/12/2018 - 24/02/2019)** ((((CAPPRM:AS1210 , CAPPRM:CE , CAPPRM:MHLW , CAPPRM:MOM) + MOVOL:400V , (CAPPRM:CE + MOVOL:500V , CAPPRM:MHLW + MOVOL:200V) + COOL:AIR) + FREQ:50HZ , (CAPPRM:ASME , CAPPRM:MHLW) + FREQ:60HZ + MOVOL:460V) + CAPPRE:IEC , ((MOVOL:230V , MOVOL:575V) + COOL:AIR , MOVOL:460V) + CAPPRE:ULCUL + CAPPRM:ASME + FREQ:60HZ) **(25/02/2019 - 24/07/2019)** (((((CAPPRM:AS1210 , CAPPRM:CE , CAPPRM:MHLW , CAPPRM:MOM) + MOVOL:400V , CAPPRM:CE + MOVOL:500V , CAPPRM:MHLW + MOVOL:200V) + FREQ:50HZ , (CAPPRM:ASME , CAPPRM:MHLW) + FREQ:60HZ + MOVOL:460V) + CAPPRE:IEC , (MOVOL:230V , MOVOL:460V , MOVOL:575V) + CAPPRE:ULCUL + CAPPRM:ASME + FREQ:60HZ) + COOL:AIR , CAPPRE:IEC + CAPPRM:MHLW + COOL:WATER + FREQ:60HZ + MOVOL:460V) **(25/07/2019 - 27/11/2019)** ((((CAPPRM:AS1210 , CAPPRM:CE , CAPPRM:MHLW , CAPPRM:MOM) + MOVOL:400V , CAPPRM:CE + MOVOL:500V , CAPPRM:MHLW + MOVOL:200V) + FREQ:50HZ , (CAPPRM:ASME , CAPPRM:MHLW) + FREQ:60HZ + MOVOL:460V) + CAPPRE:IEC , (MOVOL:230V , MOVOL:460V , MOVOL:575V) + CAPPRE:ULCUL + CAPPRM:ASME + FREQ:60HZ) + COOL:AIR	Comm Cable
	1622 5099 04	1	DI CHANE CABLE (1400MM)	**(12/12/2018 - 24/02/2019)** ((((CAPPRM:AS1210 , CAPPRM:CE , CAPPRM:MHLW , CAPPRM:MOM) + MOVOL:400V , (CAPPRM:CE + MOVOL:500V , CAPPRM:MHLW + MOVOL:200V) + COOL:AIR) + FREQ:50HZ , (CAPPRM:ASME , CAPPRM:MHLW) + FREQ:60HZ + MOVOL:460V) + CAPPRE:IEC , ((MOVOL:230V , MOVOL:575V) + COOL:AIR , MOVOL:460V) + CAPPRE:ULCUL + CAPPRM:ASME + FREQ:60HZ) **(25/02/2019 - 24/07/2019)** (((((CAPPRM:AS1210 , CAPPRM:CE , CAPPRM:MHLW , CAPPRM:MOM) + MOVOL:400V , CAPPRM:CE + MOVOL:500V , CAPPRM:MHLW + MOVOL:200V) + FREQ:50HZ , (CAPPRM:ASME , CAPPRM:MHLW) + FREQ:60HZ + MOVOL:460V) + CAPPRE:IEC , (MOVOL:230V , MOVOL:460V , MOVOL:575V) + CAPPRE:ULCUL + CAPPRM:ASME + FREQ:60HZ) + COOL:AIR , CAPPRE:IEC + CAPPRM:MHLW + COOL:WATER + FREQ:60HZ + MOVOL:460V) **(25/07/2019 - 27/11/2019)** ((((CAPPRM:AS1210 , CAPPRM:CE , CAPPRM:MHLW , CAPPRM:MOM) + MOVOL:400V , CAPPRM:CE + MOVOL:500V , CAPPRM:MHLW + MOVOL:200V) + FREQ:50HZ , (CAPPRM:ASME , CAPPRM:MHLW) + FREQ:60HZ + MOVOL:460V) + CAPPRE:IEC , (MOVOL:230V , MOVOL:460V , MOVOL:575V) + CAPPRE:ULCUL + CAPPRM:ASME + FREQ:60HZ) + COOL:AIR	

Electrical legend: Comm Cable Loose supply

Legend:

CAPPRE:IEC - Component approval electrical:IEC
CAPPRE:ULCUL - Component approval electrical:UL/cUL
CAPPRM:AS1210 - Component approval mechanical:AS1210
CAPPRM:ASME - Component approval mechanical:ASME
CAPPRM:CE - Component approval mechanical:CE
CAPPRM:MHLW - Component approval mechanical:MHLW
CAPPRM:MOM - Component approval mechanical:MOM
COOL:AIR - Cooling:Air cooled
COOL:WATER - Cooling:Water cooled
FREQ:50HZ - Frequency:50 Hz
FREQ:60HZ - Frequency:60 Hz
IDRY:Y - Integrated dryer:Yes
MODEL:GA75VP_16 - Model:GA 75VSD+
MOVOL:200V - Supply voltage:200 V
MOVOL:230V - Supply voltage:230 V
MOVOL:400V - Supply voltage:400 V
MOVOL:460V - Supply voltage:460 V
MOVOL:500V - Supply voltage:500 V
MOVOL:575V - Supply voltage:575 V

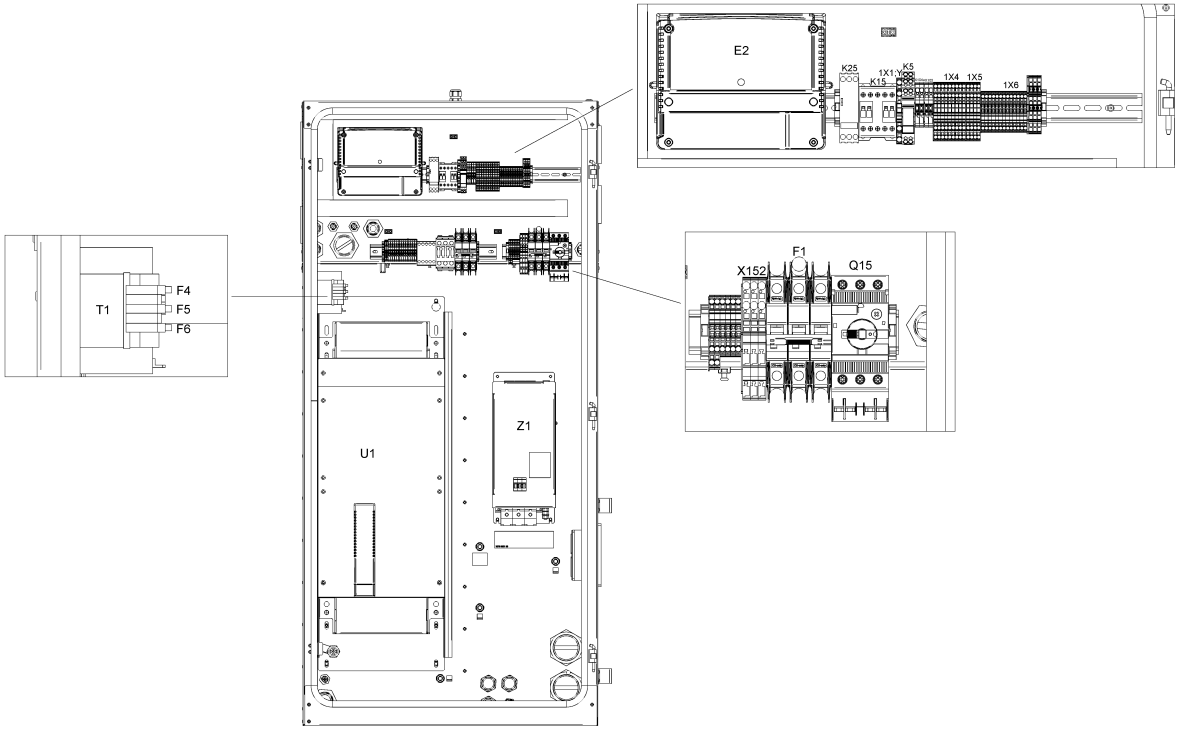
E2
K25
K15
1X1:Y
K5
1X4
1X5
1X6
T1
F4
F5
F6
U1
Z1
X152
F1
Q15

21.9 - Cubicle components GA 75L VSD+ - ((200V-400V-500V/50Hz, 460V/60Hz) - IEC, (230V-460V-575V/60Hz - UL-cUL)) - Full-Feature (12/12/2018 - 27/11/2019)

(((MOVOL:200V , MOVOL:400V , MOVOL:500V) + FREQ:50HZ , FREQ:60HZ + MOVOL:460V) + CAPPRE:IEC , (MOVOL:230V , MOVOL:460V , MOVOL:575V) + CAPPRE:ULCUL + FREQ:60HZ) + IDRY:Y + MODEL:GA75VP_16

Ref	Part Number	Qty	Name	Validity	EL
	1649 8001 22	1	CUBICLE	**(12/12/2018 - 24/02/2019)** ((((CAPPRM:AS1210 , CAPPRM:CE , CAPPRM:MHLW , CAPPRM:MOM) + MOVOL:400V , (CAPPRM:CE + MOVOL:500V , CAPPRM:MHLW + MOVOL:200V) + COOL:AIR) + FREQ:50HZ , (CAPPRM:ASME , CAPPRM:MHLW) + FREQ:60HZ + MOVOL:460V) + CAPPRE:IEC , ((MOVOL:230V , MOVOL:575V) + COOL:AIR , MOVOL:460V) + CAPPRE:ULCUL + CAPPRM:ASME + FREQ:60HZ) **(25/02/2019 - 24/07/2019)** (((((CAPPRM:AS1210 , CAPPRM:CE , CAPPRM:MHLW , CAPPRM:MOM) + MOVOL:400V , CAPPRM:CE + MOVOL:500V , CAPPRM:MHLW + MOVOL:200V) + FREQ:50HZ , (CAPPRM:ASME , CAPPRM:MHLW) + FREQ:60HZ + MOVOL:460V) + CAPPRE:IEC , (MOVOL:230V , MOVOL:460V , MOVOL:575V) + CAPPRE:ULCUL + CAPPRM:ASME + FREQ:60HZ) + COOL:AIR , CAPPRE:IEC + CAPPRM:MHLW + COOL:WATER + FREQ:60HZ + MOVOL:460V) **(25/07/2019 - 27/11/2019)** ((((CAPPRM:AS1210 , CAPPRM:CE , CAPPRM:MHLW , CAPPRM:MOM) + MOVOL:400V , CAPPRM:CE + MOVOL:500V , CAPPRM:MHLW + MOVOL:200V) + FREQ:50HZ , (CAPPRM:ASME , CAPPRM:MHLW) + FREQ:60HZ + MOVOL:460V) + CAPPRE:IEC , (MOVOL:230V , MOVOL:460V , MOVOL:575V) + CAPPRE:ULCUL + CAPPRM:ASME + FREQ:60HZ) + COOL:AIR	MSA
	1649 8001 32	1	PLATE NEOS "D"	**(12/12/2018 - 24/02/2019)** ((((CAPPRM:AS1210 , CAPPRM:CE , CAPPRM:MHLW , CAPPRM:MOM) + MOVOL:400V , (CAPPRM:CE + MOVOL:500V , CAPPRM:MHLW + MOVOL:200V) + COOL:AIR) + FREQ:50HZ , (CAPPRM:ASME , CAPPRM:MHLW) + FREQ:60HZ + MOVOL:460V) + CAPPRE:IEC , ((MOVOL:230V , MOVOL:575V) + COOL:AIR , MOVOL:460V) + CAPPRE:ULCUL + CAPPRM:ASME + FREQ:60HZ) **(25/02/2019 - 24/07/2019)** (((((CAPPRM:AS1210 , CAPPRM:CE , CAPPRM:MHLW , CAPPRM:MOM) + MOVOL:400V , CAPPRM:CE + MOVOL:500V , CAPPRM:MHLW + MOVOL:200V) + FREQ:50HZ , (CAPPRM:ASME , CAPPRM:MHLW) + FREQ:60HZ + MOVOL:460V) + CAPPRE:IEC , (MOVOL:230V , MOVOL:460V , MOVOL:575V) + CAPPRE:ULCUL + CAPPRM:ASME + FREQ:60HZ) + COOL:AIR , CAPPRE:IEC + CAPPRM:MHLW + COOL:WATER + FREQ:60HZ + MOVOL:460V) **(25/07/2019 - 27/11/2019)** ((((CAPPRM:AS1210 , CAPPRM:CE , CAPPRM:MHLW , CAPPRM:MOM) + MOVOL:400V , CAPPRM:CE + MOVOL:500V , CAPPRM:MHLW + MOVOL:200V) + FREQ:50HZ , (CAPPRM:ASME , CAPPRM:MHLW) + FREQ:60HZ + MOVOL:460V) + CAPPRE:IEC , (MOVOL:230V , MOVOL:460V , MOVOL:575V) + CAPPRE:ULCUL + CAPPRM:ASME + FREQ:60HZ) + COOL:AIR	

Electrical legend: Mounting plate

Legend:

CAPPRE:IEC - Component approval electrical:IEC
CAPPRE:ULCUL - Component approval electrical:UL/cUL
CAPPRM:AS1210 - Component approval mechanical:AS1210
CAPPRM:ASME - Component approval mechanical:ASME
CAPPRM:CE - Component approval mechanical:CE
CAPPRM:MHLW - Component approval mechanical:MHLW
CAPPRM:MOM - Component approval mechanical:MOM
COOL:AIR - Cooling:Air cooled
COOL:WATER - Cooling:Water cooled
FREQ:50HZ - Frequency:50 Hz
FREQ:60HZ - Frequency:60 Hz
IDRY:Y - Integrated dryer:Yes
MODEL:GA75VP_16 - Model:GA 75VSD+
MOVOL:200V - Supply voltage:200 V
MOVOL:230V - Supply voltage:230 V
MOVOL:400V - Supply voltage:400 V
MOVOL:460V - Supply voltage:460 V
MOVOL:500V - Supply voltage:500 V
MOVOL:575V - Supply voltage:575 V

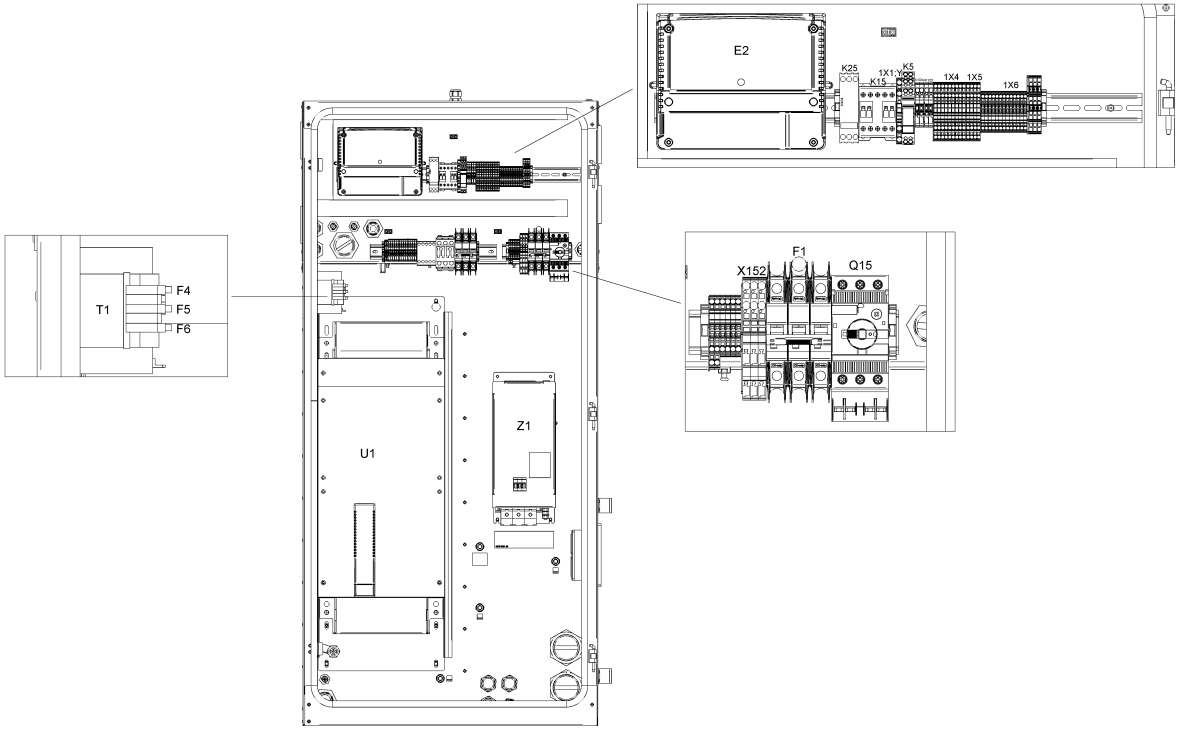
E2
K25
K15
1X1:Y
K5
1X4
1X5
1X6
T1
F4
F5
F6
U1
Z1
X152
F1
Q15

21.9 - Cubicle components GA 75L VSD+ - ((200V-400V-500V/50Hz, 460V/60Hz) - IEC, (230V-460V-575V/60Hz - UL-cUL)) - Full-Feature (12/12/2018 - 27/11/2019)

(((MOVOL:200V , MOVOL:400V , MOVOL:500V) + FREQ:50HZ , FREQ:60HZ + MOVOL:460V) + CAPPRE:IEC , (MOVOL:230V , MOVOL:460V , MOVOL:575V) + CAPPRE:ULCUL + FREQ:60HZ) + IDRY:Y + MODEL:GA75VP_16

Ref	Part Number	Qty	Name	Validity	EL
	1649 8003 85	1	MOUNTING PLATE	**(12/12/2018 - 24/02/2019)** ((((CAPPRM:AS1210 , CAPPRM:CE , CAPPRM:MHLW , CAPPRM:MOM) + MOVOL:400V , (CAPPRM:CE + MOVOL:500V , CAPPRM:MHLW + MOVOL:200V) + COOL:AIR) + FREQ:50HZ , (CAPPRM:ASME , CAPPRM:MHLW) + FREQ:60HZ + MOVOL:460V) + CAPPRE:IEC , ((MOVOL:230V , MOVOL:575V) + COOL:AIR , MOVOL:460V) + CAPPRE:ULCUL + CAPPRM:ASME + FREQ:60HZ) **(25/02/2019 - 24/07/2019)** (((((CAPPRM:AS1210 , CAPPRM:CE , CAPPRM:MHLW , CAPPRM:MOM) + MOVOL:400V , CAPPRM:CE + MOVOL:500V , CAPPRM:MHLW + MOVOL:200V) + FREQ:50HZ , (CAPPRM:ASME , CAPPRM:MHLW) + FREQ:60HZ + MOVOL:460V) + CAPPRE:IEC , (MOVOL:230V , MOVOL:460V , MOVOL:575V) + CAPPRE:ULCUL + CAPPRM:ASME + FREQ:60HZ) + COOL:AIR , CAPPRE:IEC + CAPPRM:MHLW + COOL:WATER + FREQ:60HZ + MOVOL:460V) **(25/07/2019 - 27/11/2019)** ((((CAPPRM:AS1210 , CAPPRM:CE , CAPPRM:MHLW , CAPPRM:MOM) + MOVOL:400V , CAPPRM:CE + MOVOL:500V , CAPPRM:MHLW + MOVOL:200V) + FREQ:50HZ , (CAPPRM:ASME , CAPPRM:MHLW) + FREQ:60HZ + MOVOL:460V) + CAPPRE:IEC , (MOVOL:230V , MOVOL:460V , MOVOL:575V) + CAPPRE:ULCUL + CAPPRM:ASME + FREQ:60HZ) + COOL:AIR	
	Electrical legend:	Mounting plate			
	1649 8002 39	1	WIRE HARNESS	**(12/12/2018 - 24/02/2019)** ((((CAPPRM:AS1210 , CAPPRM:CE , CAPPRM:MHLW , CAPPRM:MOM) + MOVOL:400V , (CAPPRM:CE + MOVOL:500V , CAPPRM:MHLW + MOVOL:200V) + COOL:AIR) + FREQ:50HZ , (CAPPRM:ASME , CAPPRM:MHLW) + FREQ:60HZ + MOVOL:460V) + CAPPRE:IEC , ((MOVOL:230V , MOVOL:575V) + COOL:AIR , MOVOL:460V) + CAPPRE:ULCUL + CAPPRM:ASME + FREQ:60HZ) **(25/02/2019 - 24/07/2019)** (((((CAPPRM:AS1210 , CAPPRM:CE , CAPPRM:MHLW , CAPPRM:MOM) + MOVOL:400V , CAPPRM:CE + MOVOL:500V , CAPPRM:MHLW + MOVOL:200V) + FREQ:50HZ , (CAPPRM:ASME , CAPPRM:MHLW) + FREQ:60HZ + MOVOL:460V) + CAPPRE:IEC , (MOVOL:230V , MOVOL:460V , MOVOL:575V) + CAPPRE:ULCUL + CAPPRM:ASME + FREQ:60HZ) + COOL:AIR , CAPPRE:IEC + CAPPRM:MHLW + COOL:WATER + FREQ:60HZ + MOVOL:460V) **(25/07/2019 - 27/11/2019)** ((((CAPPRM:AS1210 , CAPPRM:CE , CAPPRM:MHLW , CAPPRM:MOM) + MOVOL:400V , CAPPRM:CE + MOVOL:500V , CAPPRM:MHLW + MOVOL:200V) + FREQ:50HZ , (CAPPRM:ASME , CAPPRM:MHLW) + FREQ:60HZ + MOVOL:460V) + CAPPRE:IEC , (MOVOL:230V , MOVOL:460V , MOVOL:575V) + CAPPRE:ULCUL + CAPPRM:ASME + FREQ:60HZ) + COOL:AIR	WH

Legend:

CAPPRE:IEC - Component approval electrical:IEC
CAPPRE:ULCUL - Component approval electrical:UL/cUL
CAPPRM:AS1210 - Component approval mechanical:AS1210
CAPPRM:ASME - Component approval mechanical:ASME
CAPPRM:CE - Component approval mechanical:CE
CAPPRM:MHLW - Component approval mechanical:MHLW
CAPPRM:MOM - Component approval mechanical:MOM
COOL:AIR - Cooling:Air cooled
COOL:WATER - Cooling:Water cooled
FREQ:50HZ - Frequency:50 Hz
FREQ:60HZ - Frequency:60 Hz
IDRY:Y - Integrated dryer:Yes
MODEL:GA75VP_16 - Model:GA 75VSD+
MOVOL:200V - Supply voltage:200 V
MOVOL:230V - Supply voltage:230 V
MOVOL:400V - Supply voltage:400 V
MOVOL:460V - Supply voltage:460 V
MOVOL:500V - Supply voltage:500 V
MOVOL:575V - Supply voltage:575 V

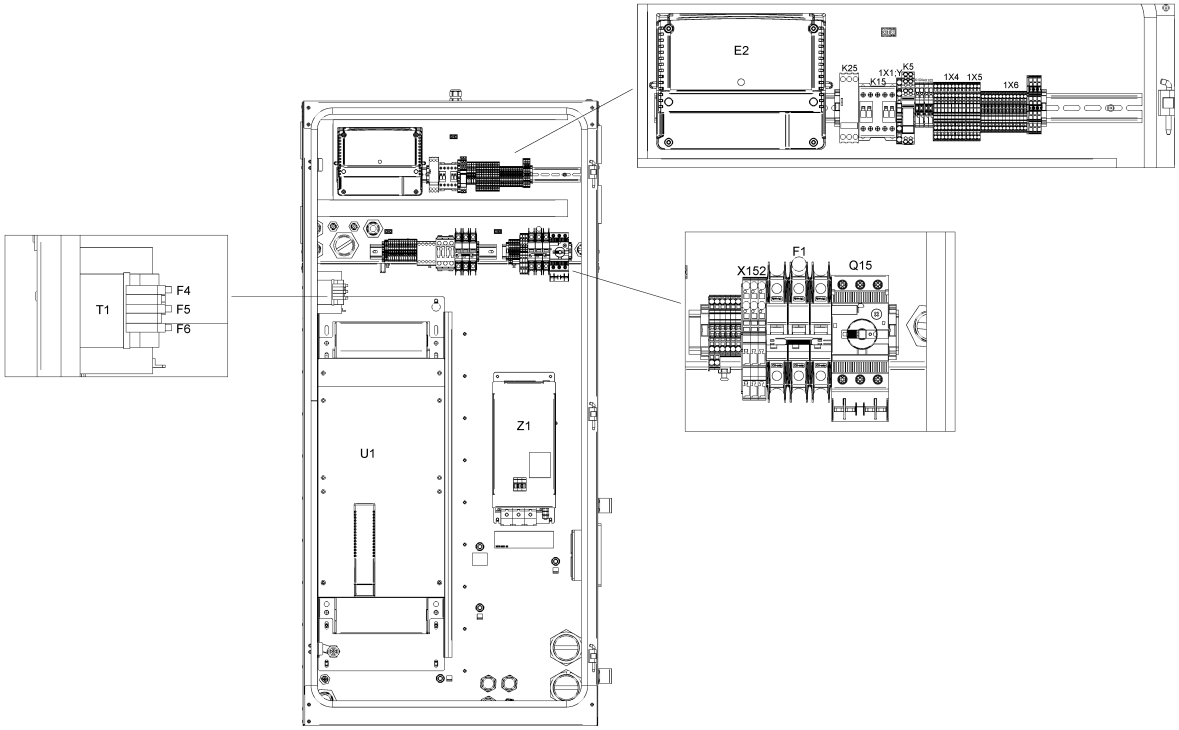
E2
K25
K15
1X1:Y
K5
1X4
1X5
1X6
T1
F4
F5
F6
U1
Z1
X152
F1
Q15

21.9 - Cubicle components GA 75L VSD+ - ((200V-400V-500V/50Hz, 460V/60Hz) - IEC, (230V-460V-575V/60Hz - UL-cUL)) - Full-Feature (12/12/2018 - 27/11/2019)

(((MOVOL:200V , MOVOL:400V , MOVOL:500V) + FREQ:50HZ , FREQ:60HZ + MOVOL:460V) + CAPPRE:IEC , (MOVOL:230V , MOVOL:460V , MOVOL:575V) + CAPPRE:ULCUL + FREQ:60HZ) + IDRY:Y + MODEL:GA75VP_16

Ref	Part Number	Qty	Name	Validity	EL
	1649 8002 40	1	WIRE HARNESS	**(12/12/2018 - 24/02/2019)** ((((CAPPRM:AS1210 , CAPPRM:CE , CAPPRM:MHLW , CAPPRM:MOM) + MOVOL:400V , (CAPPRM:CE + MOVOL:500V , CAPPRM:MHLW + MOVOL:200V) + COOL:AIR) + FREQ:50HZ , (CAPPRM:ASME , CAPPRM:MHLW) + FREQ:60HZ + MOVOL:460V) + CAPPRE:IEC , ((MOVOL:230V , MOVOL:575V) + COOL:AIR , MOVOL:460V) + CAPPRE:ULCUL + CAPPRM:ASME + FREQ:60HZ) **(25/02/2019 - 24/07/2019)** (((((CAPPRM:AS1210 , CAPPRM:CE , CAPPRM:MHLW , CAPPRM:MOM) + MOVOL:400V , CAPPRM:CE + MOVOL:500V , CAPPRM:MHLW + MOVOL:200V) + FREQ:50HZ , (CAPPRM:ASME , CAPPRM:MHLW) + FREQ:60HZ + MOVOL:460V) + CAPPRE:IEC , (MOVOL:230V , MOVOL:460V , MOVOL:575V) + CAPPRE:ULCUL + CAPPRM:ASME + FREQ:60HZ) + COOL:AIR , CAPPRE:IEC + CAPPRM:MHLW + COOL:WATER + FREQ:60HZ + MOVOL:460V) **(25/07/2019 - 27/11/2019)** ((((CAPPRM:AS1210 , CAPPRM:CE , CAPPRM:MHLW , CAPPRM:MOM) + MOVOL:400V , CAPPRM:CE + MOVOL:500V , CAPPRM:MHLW + MOVOL:200V) + FREQ:50HZ , (CAPPRM:ASME , CAPPRM:MHLW) + FREQ:60HZ + MOVOL:460V) + CAPPRE:IEC , (MOVOL:230V , MOVOL:460V , MOVOL:575V) + CAPPRE:ULCUL + CAPPRM:ASME + FREQ:60HZ) + COOL:AIR	WH
	1649 8002 72	1	CABLE POWER	**(12/12/2018 - 24/02/2019)** ((((CAPPRM:AS1210 , CAPPRM:CE , CAPPRM:MHLW , CAPPRM:MOM) + MOVOL:400V , (CAPPRM:CE + MOVOL:500V , CAPPRM:MHLW + MOVOL:200V) + COOL:AIR) + FREQ:50HZ , (CAPPRM:ASME , CAPPRM:MHLW) + FREQ:60HZ + MOVOL:460V) + CAPPRE:IEC , ((MOVOL:230V , MOVOL:575V) + COOL:AIR , MOVOL:460V) + CAPPRE:ULCUL + CAPPRM:ASME + FREQ:60HZ) **(25/02/2019 - 24/07/2019)** (((((CAPPRM:AS1210 , CAPPRM:CE , CAPPRM:MHLW , CAPPRM:MOM) + MOVOL:400V , CAPPRM:CE + MOVOL:500V , CAPPRM:MHLW + MOVOL:200V) + FREQ:50HZ , (CAPPRM:ASME , CAPPRM:MHLW) + FREQ:60HZ + MOVOL:460V) + CAPPRE:IEC , (MOVOL:230V , MOVOL:460V , MOVOL:575V) + CAPPRE:ULCUL + CAPPRM:ASME + FREQ:60HZ) + COOL:AIR , CAPPRE:IEC + CAPPRM:MHLW + COOL:WATER + FREQ:60HZ + MOVOL:460V) **(25/07/2019 - 27/11/2019)** ((((CAPPRM:AS1210 , CAPPRM:CE , CAPPRM:MHLW , CAPPRM:MOM) + MOVOL:400V , CAPPRM:CE + MOVOL:500V , CAPPRM:MHLW + MOVOL:200V) + FREQ:50HZ , (CAPPRM:ASME , CAPPRM:MHLW) + FREQ:60HZ + MOVOL:460V) + CAPPRE:IEC , (MOVOL:230V , MOVOL:460V , MOVOL:575V) + CAPPRE:ULCUL + CAPPRM:ASME + FREQ:60HZ) + COOL:AIR	

Electrical legend: Full feature (FF) Drain

Legend:

CAPPRE:IEC - Component approval electrical:IEC
CAPPRE:ULCUL - Component approval electrical:UL/cUL
CAPPRM:AS1210 - Component approval mechanical:AS1210
CAPPRM:ASME - Component approval mechanical:ASME
CAPPRM:CE - Component approval mechanical:CE
CAPPRM:MHLW - Component approval mechanical:MHLW
CAPPRM:MOM - Component approval mechanical:MOM
COOL:AIR - Cooling:Air cooled
COOL:WATER - Cooling:Water cooled
FREQ:50HZ - Frequency:50 Hz
FREQ:60HZ - Frequency:60 Hz
IDRY:Y - Integrated dryer:Yes
MODEL:GA75VP_16 - Model:GA 75VSD+
MOVOL:200V - Supply voltage:200 V
MOVOL:230V - Supply voltage:230 V
MOVOL:400V - Supply voltage:400 V
MOVOL:460V - Supply voltage:460 V
MOVOL:500V - Supply voltage:500 V
MOVOL:575V - Supply voltage:575 V

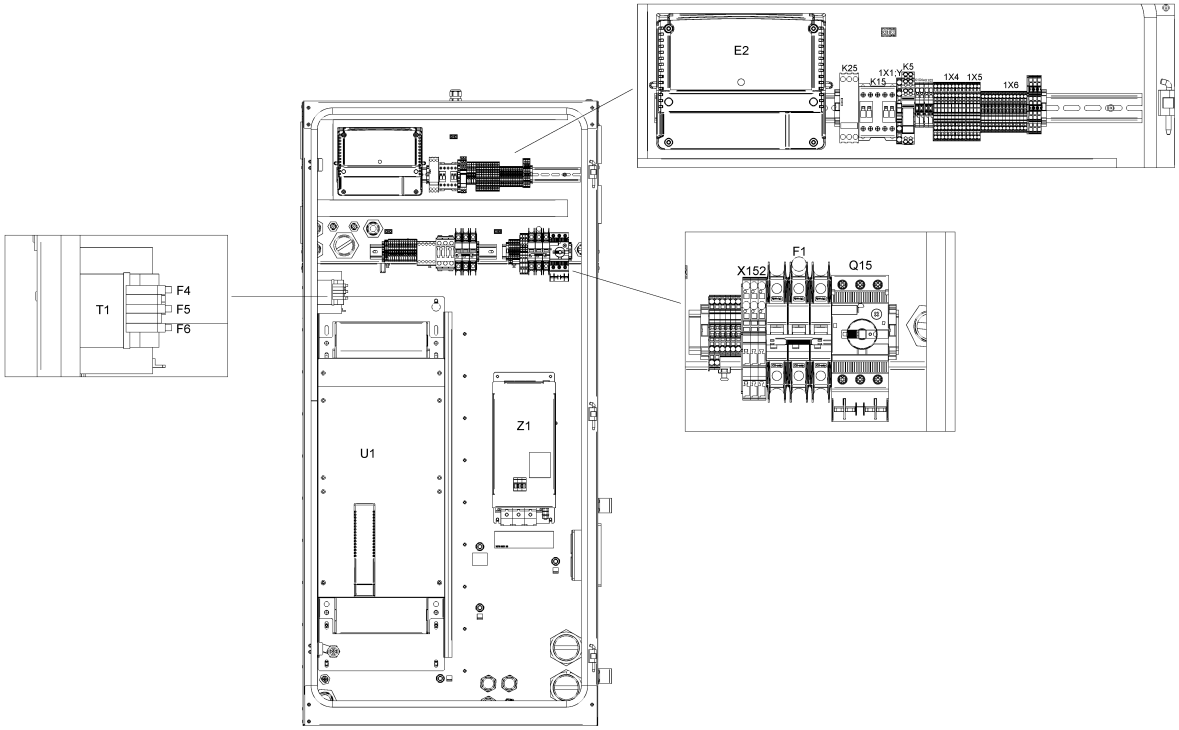
E2
K25
K15
1X1:Y
K5
1X4
1X5
1X6
T1
F4
F5
F6
U1
Z1
X152
F1
Q15

21.9 - Cubicle components GA 75L VSD+ - ((200V-400V-500V/50Hz, 460V/60Hz) - IEC, (230V-460V-575V/60Hz - UL-cUL)) - Full-Feature (12/12/2018 - 27/11/2019)

(((MOVOL:200V , MOVOL:400V , MOVOL:500V) + FREQ:50HZ , FREQ:60HZ + MOVOL:460V) + CAPPRE:IEC , (MOVOL:230V , MOVOL:460V , MOVOL:575V) + CAPPRE:ULCUL + FREQ:60HZ) + IDRY:Y + MODEL:GA75VP_16

Ref	Part Number	Qty	Name	Validity	EL
	1649 8002 73	1	WIRE HARNESS	**(12/12/2018 - 24/02/2019)** ((((CAPPRM:AS1210 , CAPPRM:CE , CAPPRM:MHLW , CAPPRM:MOM) + MOVOL:400V , (CAPPRM:CE + MOVOL:500V , CAPPRM:MHLW + MOVOL:200V) + COOL:AIR) + FREQ:50HZ , (CAPPRM:ASME , CAPPRM:MHLW) + FREQ:60HZ + MOVOL:460V) + CAPPRE:IEC , ((MOVOL:230V , MOVOL:575V) + COOL:AIR , MOVOL:460V) + CAPPRE:ULCUL + CAPPRM:ASME + FREQ:60HZ) **(25/02/2019 - 24/07/2019)** (((((CAPPRM:AS1210 , CAPPRM:CE , CAPPRM:MHLW , CAPPRM:MOM) + MOVOL:400V , CAPPRM:CE + MOVOL:500V , CAPPRM:MHLW + MOVOL:200V) + FREQ:50HZ , (CAPPRM:ASME , CAPPRM:MHLW) + FREQ:60HZ + MOVOL:460V) + CAPPRE:IEC , (MOVOL:230V , MOVOL:460V , MOVOL:575V) + CAPPRE:ULCUL + CAPPRM:ASME + FREQ:60HZ) + COOL:AIR , CAPPRE:IEC + CAPPRM:MHLW + COOL:WATER + FREQ:60HZ + MOVOL:460V) **(25/07/2019 - 27/11/2019)** ((((CAPPRM:AS1210 , CAPPRM:CE , CAPPRM:MHLW , CAPPRM:MOM) + MOVOL:400V , CAPPRM:CE + MOVOL:500V , CAPPRM:MHLW + MOVOL:200V) + FREQ:50HZ , (CAPPRM:ASME , CAPPRM:MHLW) + FREQ:60HZ + MOVOL:460V) + CAPPRE:IEC , (MOVOL:230V , MOVOL:460V , MOVOL:575V) + CAPPRE:ULCUL + CAPPRM:ASME + FREQ:60HZ) + COOL:AIR	
	Electrical legend:	Pack Drain + Air filter switch			
	1649 8002 75	1	WIRE HARNESS	**(12/12/2018 - 24/02/2019)** ((((CAPPRM:AS1210 , CAPPRM:CE , CAPPRM:MHLW , CAPPRM:MOM) + MOVOL:400V , (CAPPRM:CE + MOVOL:500V , CAPPRM:MHLW + MOVOL:200V) + COOL:AIR) + FREQ:50HZ , (CAPPRM:ASME , CAPPRM:MHLW) + FREQ:60HZ + MOVOL:460V) + CAPPRE:IEC , ((MOVOL:230V , MOVOL:575V) + COOL:AIR , MOVOL:460V) + CAPPRE:ULCUL + CAPPRM:ASME + FREQ:60HZ) **(25/02/2019 - 24/07/2019)** (((((CAPPRM:AS1210 , CAPPRM:CE , CAPPRM:MHLW , CAPPRM:MOM) + MOVOL:400V , CAPPRM:CE + MOVOL:500V , CAPPRM:MHLW + MOVOL:200V) + FREQ:50HZ , (CAPPRM:ASME , CAPPRM:MHLW) + FREQ:60HZ + MOVOL:460V) + CAPPRE:IEC , (MOVOL:230V , MOVOL:460V , MOVOL:575V) + CAPPRE:ULCUL + CAPPRM:ASME + FREQ:60HZ) + COOL:AIR , CAPPRE:IEC + CAPPRM:MHLW + COOL:WATER + FREQ:60HZ + MOVOL:460V) **(25/07/2019 - 27/11/2019)** ((((CAPPRM:AS1210 , CAPPRM:CE , CAPPRM:MHLW , CAPPRM:MOM) + MOVOL:400V , CAPPRM:CE + MOVOL:500V , CAPPRM:MHLW + MOVOL:200V) + FREQ:50HZ , (CAPPRM:ASME , CAPPRM:MHLW) + FREQ:60HZ + MOVOL:460V) + CAPPRE:IEC , (MOVOL:230V , MOVOL:460V , MOVOL:575V) + CAPPRE:ULCUL + CAPPRM:ASME + FREQ:60HZ) + COOL:AIR	
	Electrical legend:	Relative Humidity sensor			

Legend:

CAPPRE:IEC - Component approval electrical:IEC
CAPPRE:ULCUL - Component approval electrical:UL/cUL
CAPPRM:AS1210 - Component approval mechanical:AS1210
CAPPRM:ASME - Component approval mechanical:ASME
CAPPRM:CE - Component approval mechanical:CE
CAPPRM:MHLW - Component approval mechanical:MHLW
CAPPRM:MOM - Component approval mechanical:MOM
COOL:AIR - Cooling:Air cooled
COOL:WATER - Cooling:Water cooled
FREQ:50HZ - Frequency:50 Hz
FREQ:60HZ - Frequency:60 Hz
IDRY:Y - Integrated dryer:Yes
MODEL:GA75VP_16 - Model:GA 75VSD+
MOVOL:200V - Supply voltage:200 V
MOVOL:230V - Supply voltage:230 V
MOVOL:400V - Supply voltage:400 V
MOVOL:460V - Supply voltage:460 V
MOVOL:500V - Supply voltage:500 V
MOVOL:575V - Supply voltage:575 V

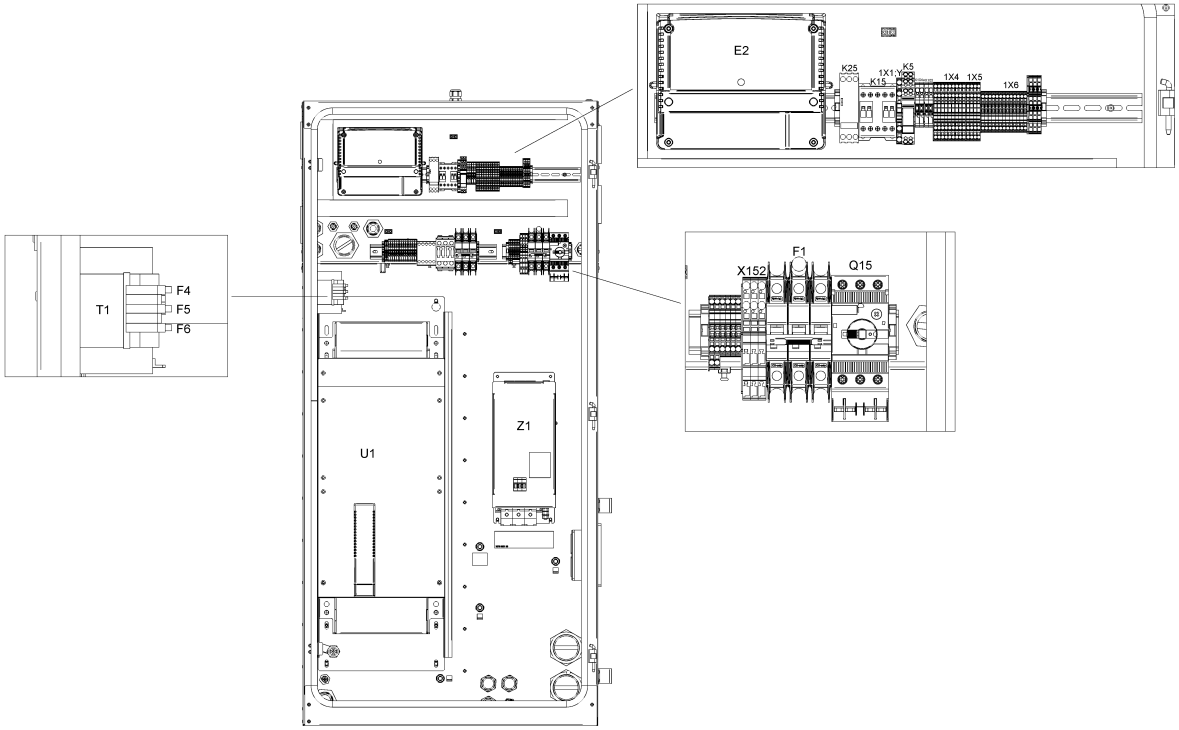
E2
K25
K15
1X1:Y
K5
1X4
1X5
1X6
T1
F4
F5
F6
U1
Z1
X152
F1
Q15

21.9 - Cubicle components GA 75L VSD+ - ((200V-400V-500V/50Hz, 460V/60Hz) - IEC, (230V-460V-575V/60Hz - UL-cUL)) - Full-Feature (12/12/2018 - 27/11/2019)

(((MOVOL:200V , MOVOL:400V , MOVOL:500V) + FREQ:50HZ , FREQ:60HZ + MOVOL:460V) + CAPPRE:IEC , (MOVOL:230V , MOVOL:460V , MOVOL:575V) + CAPPRE:ULCUL + FREQ:60HZ) + IDRY:Y + MODEL:GA75VP_16

Ref	Part Number	Qty	Name	Validity	EL
	1649 8001 45	3	MOTOR CABLE	**(12/12/2018 - 24/02/2019)** ((((CAPPRM:AS1210 , CAPPRM:CE , CAPPRM:MHLW , CAPPRM:MOM) + MOVOL:400V , (CAPPRM:CE + MOVOL:500V , CAPPRM:MHLW + MOVOL:200V) + COOL:AIR) + FREQ:50HZ , (CAPPRM:ASME , CAPPRM:MHLW) + FREQ:60HZ + MOVOL:460V) + CAPPRE:IEC , ((MOVOL:230V , MOVOL:575V) + COOL:AIR , MOVOL:460V) + CAPPRE:ULCUL + CAPPRM:ASME + FREQ:60HZ) **(25/02/2019 - 24/07/2019)** (((((CAPPRM:AS1210 , CAPPRM:CE , CAPPRM:MHLW , CAPPRM:MOM) + MOVOL:400V , CAPPRM:CE + MOVOL:500V , CAPPRM:MHLW + MOVOL:200V) + FREQ:50HZ , (CAPPRM:ASME , CAPPRM:MHLW) + FREQ:60HZ + MOVOL:460V) + CAPPRE:IEC , (MOVOL:230V , MOVOL:460V , MOVOL:575V) + CAPPRE:ULCUL + CAPPRM:ASME + FREQ:60HZ) + COOL:AIR , CAPPRE:IEC + CAPPRM:MHLW + COOL:WATER + FREQ:60HZ + MOVOL:460V) **(25/07/2019 - 27/11/2019)** ((((CAPPRM:AS1210 , CAPPRM:CE , CAPPRM:MHLW , CAPPRM:MOM) + MOVOL:400V , CAPPRM:CE + MOVOL:500V , CAPPRM:MHLW + MOVOL:200V) + FREQ:50HZ , (CAPPRM:ASME , CAPPRM:MHLW) + FREQ:60HZ + MOVOL:460V) + CAPPRE:IEC , (MOVOL:230V , MOVOL:460V , MOVOL:575V) + CAPPRE:ULCUL + CAPPRM:ASME + FREQ:60HZ) + COOL:AIR	
	Electrical legend:	Motor conduit			
	1649 8001 48	1	MOTOR CABLE	**(12/12/2018 - 24/02/2019)** ((((CAPPRM:AS1210 , CAPPRM:CE , CAPPRM:MHLW , CAPPRM:MOM) + MOVOL:400V , (CAPPRM:CE + MOVOL:500V , CAPPRM:MHLW + MOVOL:200V) + COOL:AIR) + FREQ:50HZ , (CAPPRM:ASME , CAPPRM:MHLW) + FREQ:60HZ + MOVOL:460V) + CAPPRE:IEC , ((MOVOL:230V , MOVOL:575V) + COOL:AIR , MOVOL:460V) + CAPPRE:ULCUL + CAPPRM:ASME + FREQ:60HZ) **(25/02/2019 - 24/07/2019)** (((((CAPPRM:AS1210 , CAPPRM:CE , CAPPRM:MHLW , CAPPRM:MOM) + MOVOL:400V , CAPPRM:CE + MOVOL:500V , CAPPRM:MHLW + MOVOL:200V) + FREQ:50HZ , (CAPPRM:ASME , CAPPRM:MHLW) + FREQ:60HZ + MOVOL:460V) + CAPPRE:IEC , (MOVOL:230V , MOVOL:460V , MOVOL:575V) + CAPPRE:ULCUL + CAPPRM:ASME + FREQ:60HZ) + COOL:AIR , CAPPRE:IEC + CAPPRM:MHLW + COOL:WATER + FREQ:60HZ + MOVOL:460V) **(25/07/2019 - 27/11/2019)** ((((CAPPRM:AS1210 , CAPPRM:CE , CAPPRM:MHLW , CAPPRM:MOM) + MOVOL:400V , CAPPRM:CE + MOVOL:500V , CAPPRM:MHLW + MOVOL:200V) + FREQ:50HZ , (CAPPRM:ASME , CAPPRM:MHLW) + FREQ:60HZ + MOVOL:460V) + CAPPRE:IEC , (MOVOL:230V , MOVOL:460V , MOVOL:575V) + CAPPRE:ULCUL + CAPPRM:ASME + FREQ:60HZ) + COOL:AIR	
	Electrical legend:	Motor conduit			

Legend:

CAPPRE:IEC - Component approval electrical:IEC
CAPPRE:ULCUL - Component approval electrical:UL/cUL
CAPPRM:AS1210 - Component approval mechanical:AS1210
CAPPRM:ASME - Component approval mechanical:ASME
CAPPRM:CE - Component approval mechanical:CE
CAPPRM:MHLW - Component approval mechanical:MHLW
CAPPRM:MOM - Component approval mechanical:MOM
COOL:AIR - Cooling:Air cooled
COOL:WATER - Cooling:Water cooled
FREQ:50HZ - Frequency:50 Hz
FREQ:60HZ - Frequency:60 Hz
IDRY:Y - Integrated dryer:Yes
MODEL:GA75VP_16 - Model:GA 75VSD+
MOVOL:200V - Supply voltage:200 V
MOVOL:230V - Supply voltage:230 V
MOVOL:400V - Supply voltage:400 V
MOVOL:460V - Supply voltage:460 V
MOVOL:500V - Supply voltage:500 V
MOVOL:575V - Supply voltage:575 V

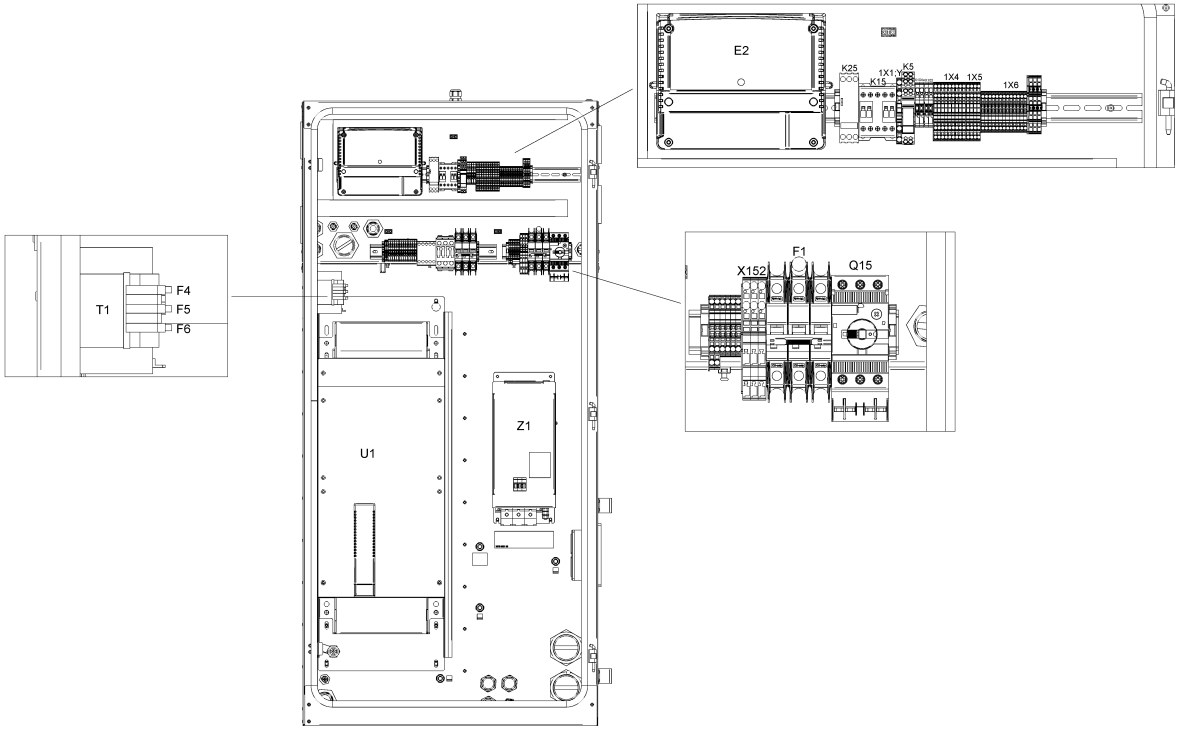
E2
K25
K15
1X1:Y
K5
1X4
1X5
1X6
T1
F4
F5
F6
U1
Z1
X152
F1
Q15

21.9 - Cubicle components GA 75L VSD+ - ((200V-400V-500V/50Hz, 460V/60Hz) - IEC, (230V-460V-575V/60Hz - UL-cUL)) - Full-Feature (12/12/2018 - 27/11/2019)

(((MOVOL:200V , MOVOL:400V , MOVOL:500V) + FREQ:50HZ , FREQ:60HZ + MOVOL:460V) + CAPPRE:IEC , (MOVOL:230V , MOVOL:460V , MOVOL:575V) + CAPPRE:ULCUL + FREQ:60HZ) + IDRY:Y + MODEL:GA75VP_16

Ref	Part Number	Qty	Name	Validity	EL
		1	DATALABEL	**(12/12/2018 - 24/02/2019)** ((((CAPPRM:AS1210 , CAPPRM:CE , CAPPRM:MHLW , CAPPRM:MOM) + MOVOL:400V , (CAPPRM:CE + MOVOL:500V , CAPPRM:MHLW + MOVOL:200V) + COOL:AIR) + FREQ:50HZ , (CAPPRM:ASME , CAPPRM:MHLW) + FREQ:60HZ + MOVOL:460V) + CAPPRE:IEC , ((MOVOL:230V , MOVOL:575V) + COOL:AIR , MOVOL:460V) + CAPPRE:ULCUL + CAPPRM:ASME + FREQ:60HZ) **(25/02/2019 - 24/07/2019)** (((((CAPPRM:AS1210 , CAPPRM:CE , CAPPRM:MHLW , CAPPRM:MOM) + MOVOL:400V , CAPPRM:CE + MOVOL:500V , CAPPRM:MHLW + MOVOL:200V) + FREQ:50HZ , (CAPPRM:ASME , CAPPRM:MHLW) + FREQ:60HZ + MOVOL:460V) + CAPPRE:IEC , (MOVOL:230V , MOVOL:460V , MOVOL:575V) + CAPPRE:ULCUL + CAPPRM:ASME + FREQ:60HZ) + COOL:AIR , CAPPRE:IEC + CAPPRM:MHLW + COOL:WATER + FREQ:60HZ + MOVOL:460V) **(25/07/2019 - 27/11/2019)** ((((CAPPRM:AS1210 , CAPPRM:CE , CAPPRM:MHLW , CAPPRM:MOM) + MOVOL:400V , CAPPRM:CE + MOVOL:500V , CAPPRM:MHLW + MOVOL:200V) + FREQ:50HZ , (CAPPRM:ASME , CAPPRM:MHLW) + FREQ:60HZ + MOVOL:460V) + CAPPRE:IEC , (MOVOL:230V , MOVOL:460V , MOVOL:575V) + CAPPRE:ULCUL + CAPPRM:ASME + FREQ:60HZ) + COOL:AIR	Label
	1079 9901 68	1	WARNING LABEL	**(12/12/2018 - 24/02/2019)** ((((CAPPRM:AS1210 , CAPPRM:CE , CAPPRM:MHLW , CAPPRM:MOM) + MOVOL:400V , (CAPPRM:CE + MOVOL:500V , CAPPRM:MHLW + MOVOL:200V) + COOL:AIR) + FREQ:50HZ , (CAPPRM:ASME , CAPPRM:MHLW) + FREQ:60HZ + MOVOL:460V) + CAPPRE:IEC , ((MOVOL:230V , MOVOL:575V) + COOL:AIR , MOVOL:460V) + CAPPRE:ULCUL + CAPPRM:ASME + FREQ:60HZ) **(25/02/2019 - 24/07/2019)** (((((CAPPRM:AS1210 , CAPPRM:CE , CAPPRM:MHLW , CAPPRM:MOM) + MOVOL:400V , CAPPRM:CE + MOVOL:500V , CAPPRM:MHLW + MOVOL:200V) + FREQ:50HZ , (CAPPRM:ASME , CAPPRM:MHLW) + FREQ:60HZ + MOVOL:460V) + CAPPRE:IEC , (MOVOL:230V , MOVOL:460V , MOVOL:575V) + CAPPRE:ULCUL + CAPPRM:ASME + FREQ:60HZ) + COOL:AIR , CAPPRE:IEC + CAPPRM:MHLW + COOL:WATER + FREQ:60HZ + MOVOL:460V) **(25/07/2019 - 27/11/2019)** ((((CAPPRM:AS1210 , CAPPRM:CE , CAPPRM:MHLW , CAPPRM:MOM) + MOVOL:400V , CAPPRM:CE + MOVOL:500V , CAPPRM:MHLW + MOVOL:200V) + FREQ:50HZ , (CAPPRM:ASME , CAPPRM:MHLW) + FREQ:60HZ + MOVOL:460V) + CAPPRE:IEC , (MOVOL:230V , MOVOL:460V , MOVOL:575V) + CAPPRE:ULCUL + CAPPRM:ASME + FREQ:60HZ) + COOL:AIR	Label

Legend:

CAPPRE:IEC - Component approval electrical:IEC
CAPPRE:ULCUL - Component approval electrical:UL/cUL
CAPPRM:AS1210 - Component approval mechanical:AS1210
CAPPRM:ASME - Component approval mechanical:ASME
CAPPRM:CE - Component approval mechanical:CE
CAPPRM:MHLW - Component approval mechanical:MHLW
CAPPRM:MOM - Component approval mechanical:MOM
COOL:AIR - Cooling:Air cooled
COOL:WATER - Cooling:Water cooled
FREQ:50HZ - Frequency:50 Hz
FREQ:60HZ - Frequency:60 Hz
IDRY:Y - Integrated dryer:Yes
MODEL:GA75VP_16 - Model:GA 75VSD+
MOVOL:200V - Supply voltage:200 V
MOVOL:230V - Supply voltage:230 V
MOVOL:400V - Supply voltage:400 V
MOVOL:460V - Supply voltage:460 V
MOVOL:500V - Supply voltage:500 V
MOVOL:575V - Supply voltage:575 V

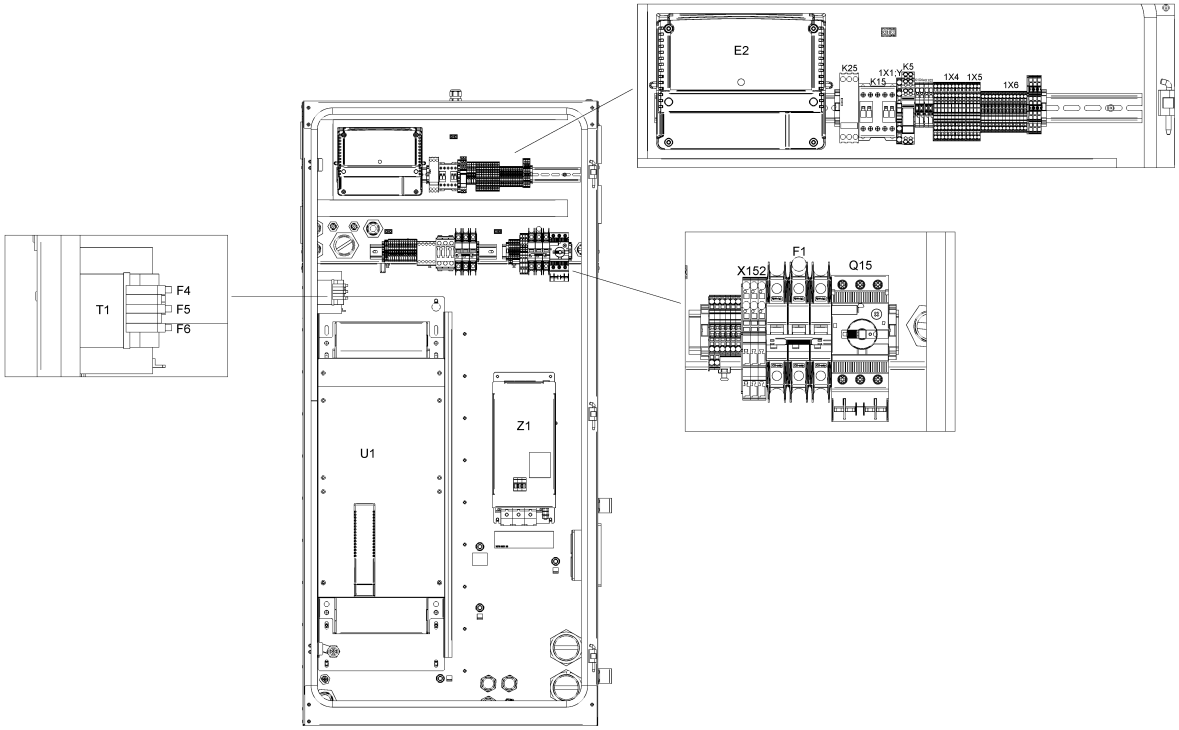
E2
K25
K15
1X1:Y
K5
1X4
1X5
1X6
T1
F4
F5
F6
U1
Z1
X152
F1
Q15

21.9 - Cubicle components GA 75L VSD+ - ((200V-400V-500V/50Hz, 460V/60Hz) - IEC, (230V-460V-575V/60Hz - UL-cUL)) - Full-Feature (12/12/2018 - 27/11/2019)

(((MOVOL:200V , MOVOL:400V , MOVOL:500V) + FREQ:50HZ , FREQ:60HZ + MOVOL:460V) + CAPPRE:IEC , (MOVOL:230V , MOVOL:460V , MOVOL:575V) + CAPPRE:ULCUL + FREQ:60HZ) + IDRY:Y + MODEL:GA75VP_16

Ref	Part Number	Qty	Name	Validity	EL
	1649 8005 00	0	LABEL	**(12/12/2018 - 24/02/2019)** ((((CAPPRM:AS1210 , CAPPRM:CE , CAPPRM:MHLW , CAPPRM:MOM) + MOVOL:400V , (CAPPRM:CE + MOVOL:500V , CAPPRM:MHLW + MOVOL:200V) + COOL:AIR) + FREQ:50HZ , (CAPPRM:ASME , CAPPRM:MHLW) + FREQ:60HZ + MOVOL:460V) + CAPPRE:IEC , ((MOVOL:230V , MOVOL:575V) + COOL:AIR , MOVOL:460V) + CAPPRE:ULCUL + CAPPRM:ASME + FREQ:60HZ) **(25/02/2019 - 24/07/2019)** (((((CAPPRM:AS1210 , CAPPRM:CE , CAPPRM:MHLW , CAPPRM:MOM) + MOVOL:400V , CAPPRM:CE + MOVOL:500V , CAPPRM:MHLW + MOVOL:200V) + FREQ:50HZ , (CAPPRM:ASME , CAPPRM:MHLW) + FREQ:60HZ + MOVOL:460V) + CAPPRE:IEC , (MOVOL:230V , MOVOL:460V , MOVOL:575V) + CAPPRE:ULCUL + CAPPRM:ASME + FREQ:60HZ) + COOL:AIR , CAPPRE:IEC + CAPPRM:MHLW + COOL:WATER + FREQ:60HZ + MOVOL:460V) **(25/07/2019 - 27/11/2019)** ((((CAPPRM:AS1210 , CAPPRM:CE , CAPPRM:MHLW , CAPPRM:MOM) + MOVOL:400V , CAPPRM:CE + MOVOL:500V , CAPPRM:MHLW + MOVOL:200V) + FREQ:50HZ , (CAPPRM:ASME , CAPPRM:MHLW) + FREQ:60HZ + MOVOL:460V) + CAPPRE:IEC , (MOVOL:230V , MOVOL:460V , MOVOL:575V) + CAPPRE:ULCUL + CAPPRM:ASME + FREQ:60HZ) + COOL:AIR	Label
	1900 5350 15	1	INVERTER	**(12/12/2018 - 24/02/2019)** ((((CAPPRM:AS1210 , CAPPRM:CE , CAPPRM:MHLW , CAPPRM:MOM) + MOVOL:400V , (CAPPRM:CE + MOVOL:500V , CAPPRM:MHLW + MOVOL:200V) + COOL:AIR) + FREQ:50HZ , (CAPPRM:ASME , CAPPRM:MHLW) + FREQ:60HZ + MOVOL:460V) + CAPPRE:IEC , ((MOVOL:230V , MOVOL:575V) + COOL:AIR , MOVOL:460V) + CAPPRE:ULCUL + CAPPRM:ASME + FREQ:60HZ) **(25/02/2019 - 24/07/2019)** (((((CAPPRM:AS1210 , CAPPRM:CE , CAPPRM:MHLW , CAPPRM:MOM) + MOVOL:400V , CAPPRM:CE + MOVOL:500V , CAPPRM:MHLW + MOVOL:200V) + FREQ:50HZ , (CAPPRM:ASME , CAPPRM:MHLW) + FREQ:60HZ + MOVOL:460V) + CAPPRE:IEC , (MOVOL:230V , MOVOL:460V , MOVOL:575V) + CAPPRE:ULCUL + CAPPRM:ASME + FREQ:60HZ) + COOL:AIR , CAPPRE:IEC + CAPPRM:MHLW + COOL:WATER + FREQ:60HZ + MOVOL:460V) **(25/07/2019 - 27/11/2019)** ((((CAPPRM:AS1210 , CAPPRM:CE , CAPPRM:MHLW , CAPPRM:MOM) + MOVOL:400V , CAPPRM:CE + MOVOL:500V , CAPPRM:MHLW + MOVOL:200V) + FREQ:50HZ , (CAPPRM:ASME , CAPPRM:MHLW) + FREQ:60HZ + MOVOL:460V) + CAPPRE:IEC , (MOVOL:230V , MOVOL:460V , MOVOL:575V) + CAPPRE:ULCUL + CAPPRM:ASME + FREQ:60HZ) + COOL:AIR	U1

Legend:

CAPPRE:IEC - Component approval electrical:IEC
CAPPRE:ULCUL - Component approval electrical:UL/cUL
CAPPRM:AS1210 - Component approval mechanical:AS1210
CAPPRM:ASME - Component approval mechanical:ASME
CAPPRM:CE - Component approval mechanical:CE
CAPPRM:MHLW - Component approval mechanical:MHLW
CAPPRM:MOM - Component approval mechanical:MOM
COOL:AIR - Cooling:Air cooled
COOL:WATER - Cooling:Water cooled
FREQ:50HZ - Frequency:50 Hz
FREQ:60HZ - Frequency:60 Hz
IDRY:Y - Integrated dryer:Yes
MODEL:GA75VP_16 - Model:GA 75VSD+
MOVOL:200V - Supply voltage:200 V
MOVOL:230V - Supply voltage:230 V
MOVOL:400V - Supply voltage:400 V
MOVOL:460V - Supply voltage:460 V
MOVOL:500V - Supply voltage:500 V
MOVOL:575V - Supply voltage:575 V

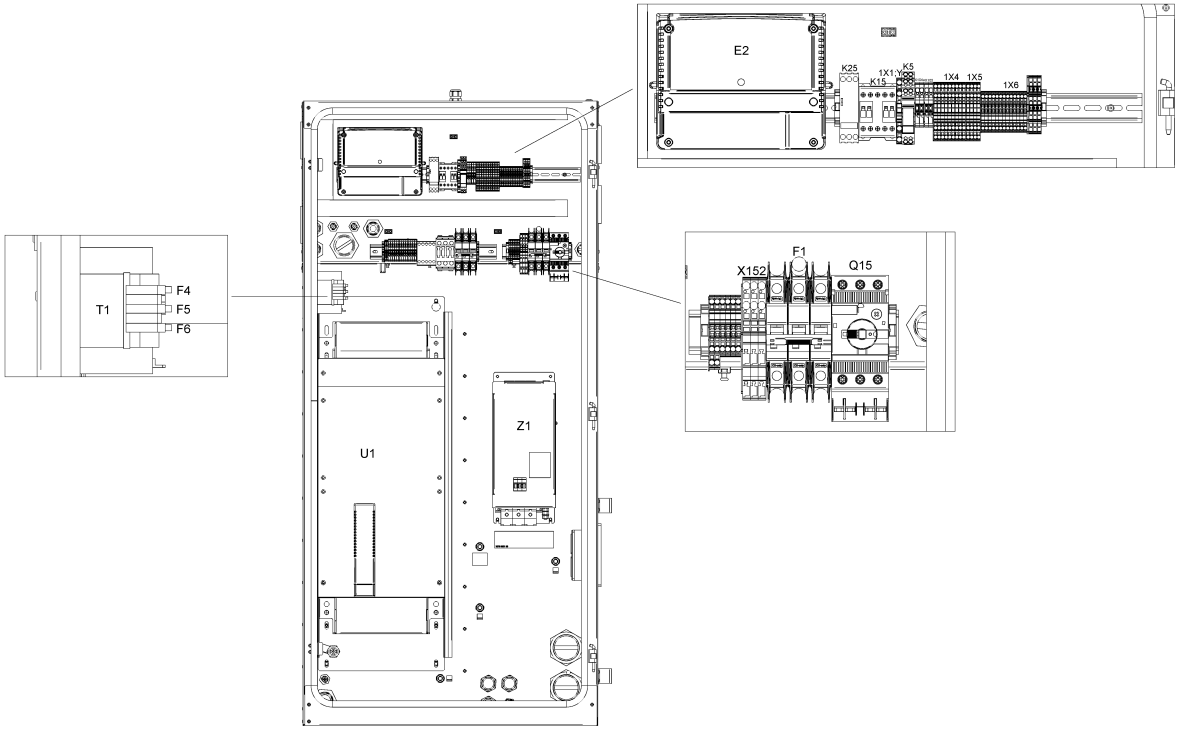
E2
K25
K15
1X1:Y
K5
1X4
1X5
1X6
T1
F4
F5
F6
U1
Z1
X152
F1
Q15

Ref	Part Number	Qty	Name	Validity	EL
	1631 2079 00	1	NANOPERMRING	**(12/12/2018 - 24/02/2019)** ((((CAPPRM:AS1210 , CAPPRM:CE , CAPPRM:MHLW , CAPPRM:MOM) + MOVOL:400V , (CAPPRM:CE + MOVOL:500V , CAPPRM:MHLW + MOVOL:200V) + COOL:AIR) + FREQ:50HZ , (CAPPRM:ASME , CAPPRM:MHLW) + FREQ:60HZ + MOVOL:460V) + CAPPRE:IEC , ((MOVOL:230V , MOVOL:575V) + COOL:AIR , MOVOL:460V) + CAPPRE:ULCUL + CAPPRM:ASME + FREQ:60HZ) **(25/02/2019 - 24/07/2019)** (((((CAPPRM:AS1210 , CAPPRM:CE , CAPPRM:MHLW , CAPPRM:MOM) + MOVOL:400V , CAPPRM:CE + MOVOL:500V , CAPPRM:MHLW + MOVOL:200V) + FREQ:50HZ , (CAPPRM:ASME , CAPPRM:MHLW) + FREQ:60HZ + MOVOL:460V) + CAPPRE:IEC , (MOVOL:230V , MOVOL:460V , MOVOL:575V) + CAPPRE:ULCUL + CAPPRM:ASME + FREQ:60HZ) + COOL:AIR , CAPPRE:IEC + CAPPRM:MHLW + COOL:WATER + FREQ:60HZ + MOVOL:460V) **(25/07/2019 - 27/11/2019)** ((((CAPPRM:AS1210 , CAPPRM:CE , CAPPRM:MHLW , CAPPRM:MOM) + MOVOL:400V , CAPPRM:CE + MOVOL:500V , CAPPRM:MHLW + MOVOL:200V) + FREQ:50HZ , (CAPPRM:ASME , CAPPRM:MHLW) + FREQ:60HZ + MOVOL:460V) + CAPPRE:IEC , (MOVOL:230V , MOVOL:460V , MOVOL:575V) + CAPPRE:ULCUL + CAPPRM:ASME + FREQ:60HZ) + COOL:AIR	
	Electrical legend:	Nanoperm ring			
	0697 9811 17	2	PLUG	**(12/12/2018 - 24/02/2019)** ((((CAPPRM:AS1210 , CAPPRM:CE , CAPPRM:MHLW , CAPPRM:MOM) + MOVOL:400V , (CAPPRM:CE + MOVOL:500V , CAPPRM:MHLW + MOVOL:200V) + COOL:AIR) + FREQ:50HZ , (CAPPRM:ASME , CAPPRM:MHLW) + FREQ:60HZ + MOVOL:460V) + CAPPRE:IEC , ((MOVOL:230V , MOVOL:575V) + COOL:AIR , MOVOL:460V) + CAPPRE:ULCUL + CAPPRM:ASME + FREQ:60HZ) **(25/02/2019 - 24/07/2019)** (((((CAPPRM:AS1210 , CAPPRM:CE , CAPPRM:MHLW , CAPPRM:MOM) + MOVOL:400V , CAPPRM:CE + MOVOL:500V , CAPPRM:MHLW + MOVOL:200V) + FREQ:50HZ , (CAPPRM:ASME , CAPPRM:MHLW) + FREQ:60HZ + MOVOL:460V) + CAPPRE:IEC , (MOVOL:230V , MOVOL:460V , MOVOL:575V) + CAPPRE:ULCUL + CAPPRM:ASME + FREQ:60HZ) + COOL:AIR , CAPPRE:IEC + CAPPRM:MHLW + COOL:WATER + FREQ:60HZ + MOVOL:460V) **(25/07/2019 - 27/11/2019)** ((((CAPPRM:AS1210 , CAPPRM:CE , CAPPRM:MHLW , CAPPRM:MOM) + MOVOL:400V , CAPPRM:CE + MOVOL:500V , CAPPRM:MHLW + MOVOL:200V) + FREQ:50HZ , (CAPPRM:ASME , CAPPRM:MHLW) + FREQ:60HZ + MOVOL:460V) + CAPPRE:IEC , (MOVOL:230V , MOVOL:460V , MOVOL:575V) + CAPPRE:ULCUL + CAPPRM:ASME + FREQ:60HZ) + COOL:AIR	
	Electrical legend:	Plug for transfo supply			

Legend:

CAPPRE:IEC - Component approval electrical:IEC
CAPPRE:ULCUL - Component approval electrical:UL/cUL
CAPPRM:AS1210 - Component approval mechanical:AS1210
CAPPRM:ASME - Component approval mechanical:ASME
CAPPRM:CE - Component approval mechanical:CE
CAPPRM:MHLW - Component approval mechanical:MHLW
CAPPRM:MOM - Component approval mechanical:MOM
COOL:AIR - Cooling:Air cooled
COOL:WATER - Cooling:Water cooled
FREQ:50HZ - Frequency:50 Hz
FREQ:60HZ - Frequency:60 Hz
IDRY:Y - Integrated dryer:Yes
MODEL:GA75VP_16 - Model:GA 75VSD+
MOVOL:200V - Supply voltage:200 V
MOVOL:230V - Supply voltage:230 V
MOVOL:400V - Supply voltage:400 V
MOVOL:460V - Supply voltage:460 V
MOVOL:500V - Supply voltage:500 V
MOVOL:575V - Supply voltage:575 V

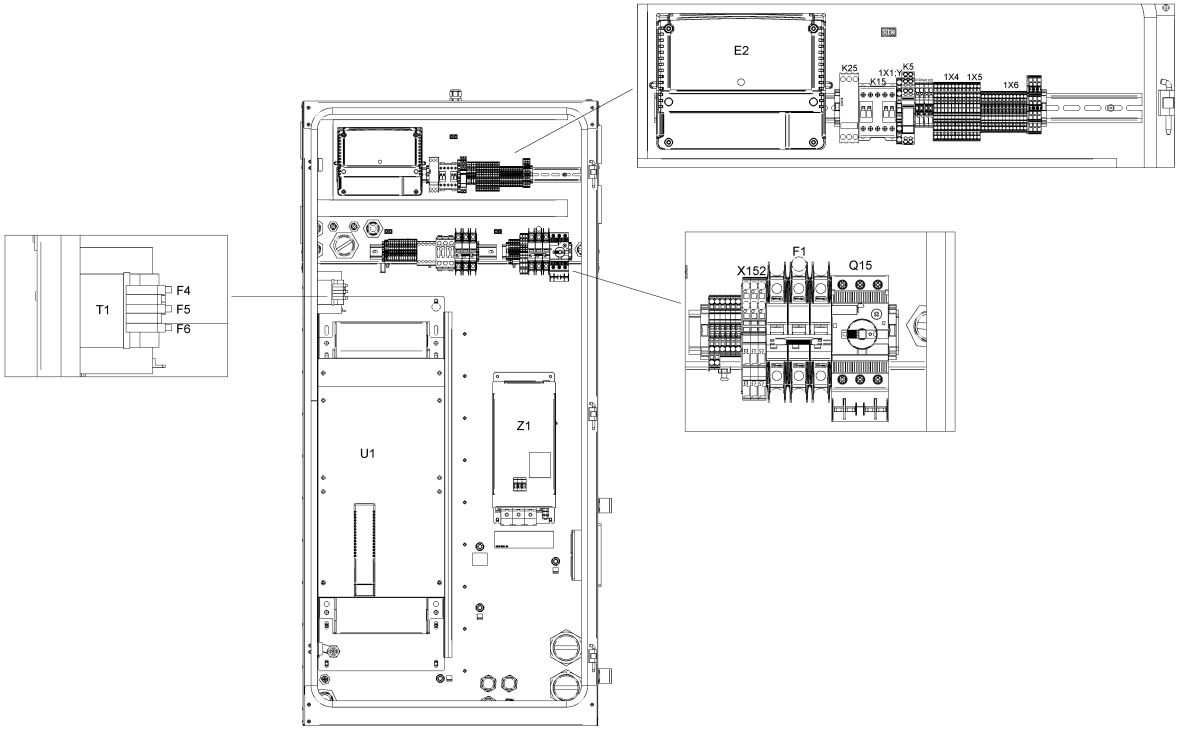
E2
K25
K15
1X1:Y
K5
1X4
1X5
1X6
T1
F4
F5
F6
U1
Z1
X152
F1
Q15

Ref	Part Number	Qty	Name	Validity	EL
	0989 3700 48	2	NUT	**(12/12/2018 - 24/02/2019)** ((((CAPPRM:AS1210 , CAPPRM:CE , CAPPRM:MHLW , CAPPRM:MOM) + MOVOL:400V , (CAPPRM:CE + MOVOL:500V , CAPPRM:MHLW + MOVOL:200V) + COOL:AIR) + FREQ:50HZ , (CAPPRM:ASME , CAPPRM:MHLW) + FREQ:60HZ + MOVOL:460V) + CAPPRE:IEC , ((MOVOL:230V , MOVOL:575V) + COOL:AIR , MOVOL:460V) + CAPPRE:ULCUL + CAPPRM:ASME + FREQ:60HZ) **(25/02/2019 - 24/07/2019)** (((((CAPPRM:AS1210 , CAPPRM:CE , CAPPRM:MHLW , CAPPRM:MOM) + MOVOL:400V , CAPPRM:CE + MOVOL:500V , CAPPRM:MHLW + MOVOL:200V) + FREQ:50HZ , (CAPPRM:ASME , CAPPRM:MHLW) + FREQ:60HZ + MOVOL:460V) + CAPPRE:IEC , (MOVOL:230V , MOVOL:460V , MOVOL:575V) + CAPPRE:ULCUL + CAPPRM:ASME + FREQ:60HZ) + COOL:AIR , CAPPRE:IEC + CAPPRM:MHLW + COOL:WATER + FREQ:60HZ + MOVOL:460V) **(25/07/2019 - 27/11/2019)** ((((CAPPRM:AS1210 , CAPPRM:CE , CAPPRM:MHLW , CAPPRM:MOM) + MOVOL:400V , CAPPRM:CE + MOVOL:500V , CAPPRM:MHLW + MOVOL:200V) + FREQ:50HZ , (CAPPRM:ASME , CAPPRM:MHLW) + FREQ:60HZ + MOVOL:460V) + CAPPRE:IEC , (MOVOL:230V , MOVOL:460V , MOVOL:575V) + CAPPRE:ULCUL + CAPPRM:ASME + FREQ:60HZ) + COOL:AIR	
	Electrical legend:	Nut for transfo supply			
	0698 5140 72	1	CABLE GLAND	**(12/12/2018 - 24/02/2019)** ((((CAPPRM:AS1210 , CAPPRM:CE , CAPPRM:MHLW , CAPPRM:MOM) + MOVOL:400V , (CAPPRM:CE + MOVOL:500V , CAPPRM:MHLW + MOVOL:200V) + COOL:AIR) + FREQ:50HZ , (CAPPRM:ASME , CAPPRM:MHLW) + FREQ:60HZ + MOVOL:460V) + CAPPRE:IEC , ((MOVOL:230V , MOVOL:575V) + COOL:AIR , MOVOL:460V) + CAPPRE:ULCUL + CAPPRM:ASME + FREQ:60HZ) **(25/02/2019 - 24/07/2019)** (((((CAPPRM:AS1210 , CAPPRM:CE , CAPPRM:MHLW , CAPPRM:MOM) + MOVOL:400V , CAPPRM:CE + MOVOL:500V , CAPPRM:MHLW + MOVOL:200V) + FREQ:50HZ , (CAPPRM:ASME , CAPPRM:MHLW) + FREQ:60HZ + MOVOL:460V) + CAPPRE:IEC , (MOVOL:230V , MOVOL:460V , MOVOL:575V) + CAPPRE:ULCUL + CAPPRM:ASME + FREQ:60HZ) + COOL:AIR , CAPPRE:IEC + CAPPRM:MHLW + COOL:WATER + FREQ:60HZ + MOVOL:460V) **(25/07/2019 - 27/11/2019)** ((((CAPPRM:AS1210 , CAPPRM:CE , CAPPRM:MHLW , CAPPRM:MOM) + MOVOL:400V , CAPPRM:CE + MOVOL:500V , CAPPRM:MHLW + MOVOL:200V) + FREQ:50HZ , (CAPPRM:ASME , CAPPRM:MHLW) + FREQ:60HZ + MOVOL:460V) + CAPPRE:IEC , (MOVOL:230V , MOVOL:460V , MOVOL:575V) + CAPPRE:ULCUL + CAPPRM:ASME + FREQ:60HZ) + COOL:AIR	Fan

Legend:

CAPPRE:IEC - Component approval electrical:IEC
CAPPRE:ULCUL - Component approval electrical:UL/cUL
CAPPRM:AS1210 - Component approval mechanical:AS1210
CAPPRM:ASME - Component approval mechanical:ASME
CAPPRM:CE - Component approval mechanical:CE
CAPPRM:MHLW - Component approval mechanical:MHLW
CAPPRM:MOM - Component approval mechanical:MOM
COOL:AIR - Cooling:Air cooled
COOL:WATER - Cooling:Water cooled
FREQ:50HZ - Frequency:50 Hz
FREQ:60HZ - Frequency:60 Hz
IDRY:Y - Integrated dryer:Yes
MODEL:GA75VP_16 - Model:GA 75VSD+
MOVOL:200V - Supply voltage:200 V
MOVOL:230V - Supply voltage:230 V
MOVOL:400V - Supply voltage:400 V
MOVOL:460V - Supply voltage:460 V
MOVOL:500V - Supply voltage:500 V
MOVOL:575V - Supply voltage:575 V

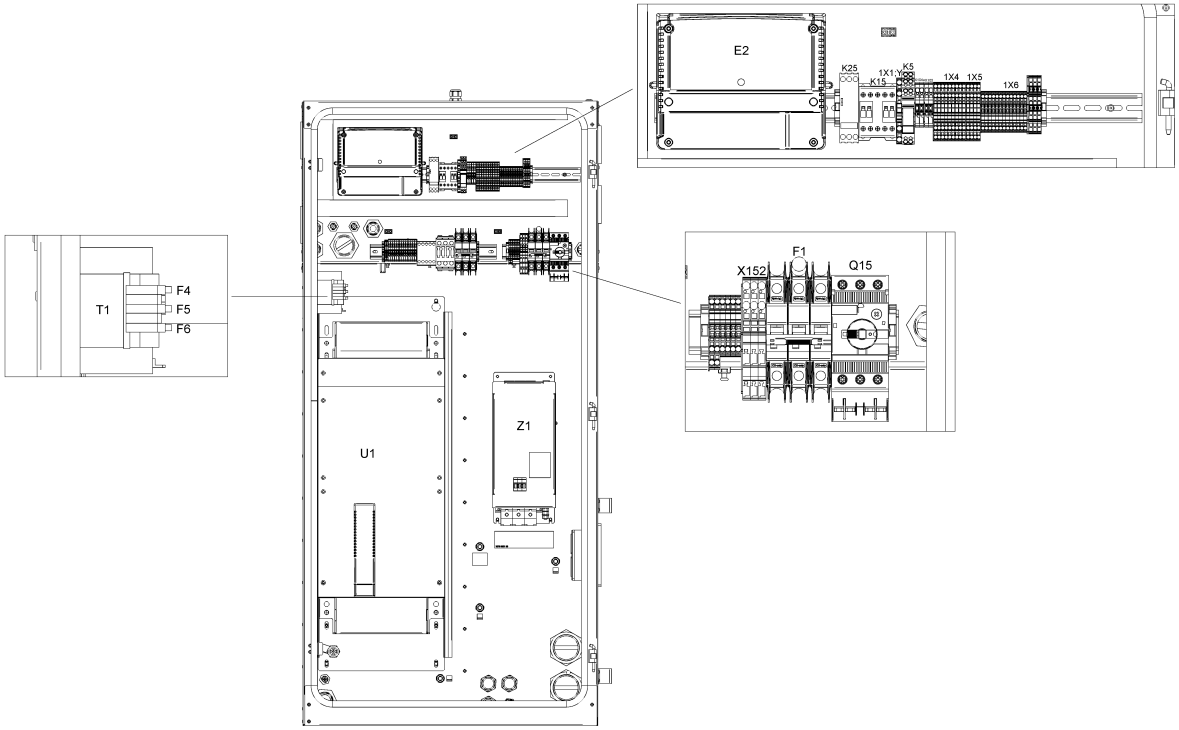
E2
K25
K15
1X1:Y
K5
1X4
1X5
1X6
T1
F4
F5
F6
U1
Z1
X152
F1
Q15

21.9 - Cubicle components GA 75L VSD+ - ((200V-400V-500V/50Hz, 460V/60Hz) - IEC, (230V-460V-575V/60Hz - UL-cUL)) - Full-Feature (12/12/2018 - 27/11/2019)

(((MOVOL:200V , MOVOL:400V , MOVOL:500V) + FREQ:50HZ , FREQ:60HZ + MOVOL:460V) + CAPPRE:IEC , (MOVOL:230V , MOVOL:460V , MOVOL:575V) + CAPPRE:ULCUL + FREQ:60HZ) + IDRY:Y + MODEL:GA75VP_16

Ref	Part Number	Qty	Name	Validity	EL
	0698 5140 71	1	CABLE GLAND	**(12/12/2018 - 24/02/2019)** ((((CAPPRM:AS1210 , CAPPRM:CE , CAPPRM:MHLW , CAPPRM:MOM) + MOVOL:400V , (CAPPRM:CE + MOVOL:500V , CAPPRM:MHLW + MOVOL:200V) + COOL:AIR) + FREQ:50HZ , (CAPPRM:ASME , CAPPRM:MHLW) + FREQ:60HZ + MOVOL:460V) + CAPPRE:IEC , ((MOVOL:230V , MOVOL:575V) + COOL:AIR , MOVOL:460V) + CAPPRE:ULCUL + CAPPRM:ASME + FREQ:60HZ) **(25/02/2019 - 24/07/2019)** (((((CAPPRM:AS1210 , CAPPRM:CE , CAPPRM:MHLW , CAPPRM:MOM) + MOVOL:400V , CAPPRM:CE + MOVOL:500V , CAPPRM:MHLW + MOVOL:200V) + FREQ:50HZ , (CAPPRM:ASME , CAPPRM:MHLW) + FREQ:60HZ + MOVOL:460V) + CAPPRE:IEC , (MOVOL:230V , MOVOL:460V , MOVOL:575V) + CAPPRE:ULCUL + CAPPRM:ASME + FREQ:60HZ) + COOL:AIR , CAPPRE:IEC + CAPPRM:MHLW + COOL:WATER + FREQ:60HZ + MOVOL:460V) **(25/07/2019 - 27/11/2019)** ((((CAPPRM:AS1210 , CAPPRM:CE , CAPPRM:MHLW , CAPPRM:MOM) + MOVOL:400V , CAPPRM:CE + MOVOL:500V , CAPPRM:MHLW + MOVOL:200V) + FREQ:50HZ , (CAPPRM:ASME , CAPPRM:MHLW) + FREQ:60HZ + MOVOL:460V) + CAPPRE:IEC , (MOVOL:230V , MOVOL:460V , MOVOL:575V) + CAPPRE:ULCUL + CAPPRM:ASME + FREQ:60HZ) + COOL:AIR	
	Electrical legend:	Ambient sensor			
	0697 9809 20	1	LOCKNUT	**(12/12/2018 - 24/02/2019)** ((((CAPPRM:AS1210 , CAPPRM:CE , CAPPRM:MHLW , CAPPRM:MOM) + MOVOL:400V , (CAPPRM:CE + MOVOL:500V , CAPPRM:MHLW + MOVOL:200V) + COOL:AIR) + FREQ:50HZ , (CAPPRM:ASME , CAPPRM:MHLW) + FREQ:60HZ + MOVOL:460V) + CAPPRE:IEC , ((MOVOL:230V , MOVOL:575V) + COOL:AIR , MOVOL:460V) + CAPPRE:ULCUL + CAPPRM:ASME + FREQ:60HZ) **(25/02/2019 - 24/07/2019)** (((((CAPPRM:AS1210 , CAPPRM:CE , CAPPRM:MHLW , CAPPRM:MOM) + MOVOL:400V , CAPPRM:CE + MOVOL:500V , CAPPRM:MHLW + MOVOL:200V) + FREQ:50HZ , (CAPPRM:ASME , CAPPRM:MHLW) + FREQ:60HZ + MOVOL:460V) + CAPPRE:IEC , (MOVOL:230V , MOVOL:460V , MOVOL:575V) + CAPPRE:ULCUL + CAPPRM:ASME + FREQ:60HZ) + COOL:AIR , CAPPRE:IEC + CAPPRM:MHLW + COOL:WATER + FREQ:60HZ + MOVOL:460V) **(25/07/2019 - 27/11/2019)** ((((CAPPRM:AS1210 , CAPPRM:CE , CAPPRM:MHLW , CAPPRM:MOM) + MOVOL:400V , CAPPRM:CE + MOVOL:500V , CAPPRM:MHLW + MOVOL:200V) + FREQ:50HZ , (CAPPRM:ASME , CAPPRM:MHLW) + FREQ:60HZ + MOVOL:460V) + CAPPRE:IEC , (MOVOL:230V , MOVOL:460V , MOVOL:575V) + CAPPRE:ULCUL + CAPPRM:ASME + FREQ:60HZ) + COOL:AIR	
	Electrical legend:	Ambient sensor			

Legend:

CAPPRE:IEC - Component approval electrical:IEC
CAPPRE:ULCUL - Component approval electrical:UL/cUL
CAPPRM:AS1210 - Component approval mechanical:AS1210
CAPPRM:ASME - Component approval mechanical:ASME
CAPPRM:CE - Component approval mechanical:CE
CAPPRM:MHLW - Component approval mechanical:MHLW
CAPPRM:MOM - Component approval mechanical:MOM
COOL:AIR - Cooling:Air cooled
COOL:WATER - Cooling:Water cooled
FREQ:50HZ - Frequency:50 Hz
FREQ:60HZ - Frequency:60 Hz
IDRY:Y - Integrated dryer:Yes
MODEL:GA75VP_16 - Model:GA 75VSD+
MOVOL:200V - Supply voltage:200 V
MOVOL:230V - Supply voltage:230 V
MOVOL:400V - Supply voltage:400 V
MOVOL:460V - Supply voltage:460 V
MOVOL:500V - Supply voltage:500 V
MOVOL:575V - Supply voltage:575 V

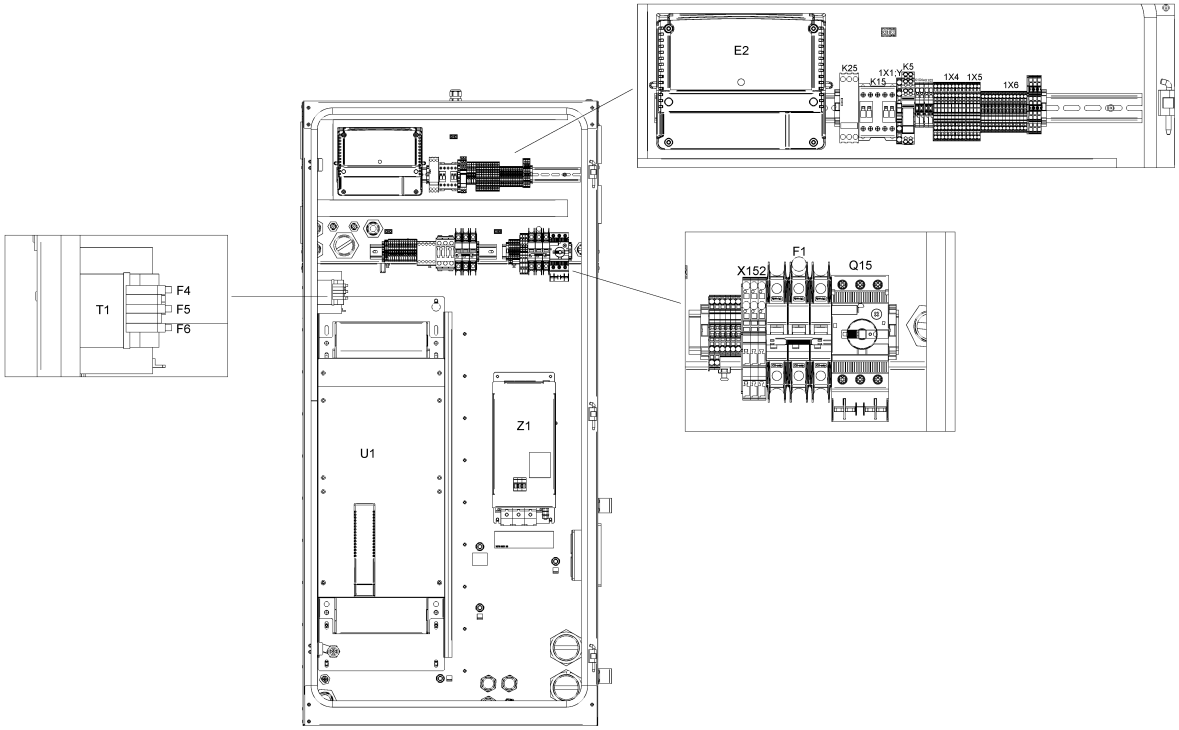
E2
K25
K15
1X1:Y
K5
1X4
1X5
1X6
T1
F4
F5
F6
U1
Z1
X152
F1
Q15

21.9 - Cubicle components GA 75L VSD+ - ((200V-400V-500V/50Hz, 460V/60Hz) - IEC, (230V-460V-575V/60Hz - UL-cUL)) - Full-Feature (12/12/2018 - 27/11/2019)

(((MOVOL:200V , MOVOL:400V , MOVOL:500V) + FREQ:50HZ , FREQ:60HZ + MOVOL:460V) + CAPPRE:IEC , (MOVOL:230V , MOVOL:460V , MOVOL:575V) + CAPPRE:ULCUL + FREQ:60HZ) + IDRY:Y + MODEL:GA75VP_16

Ref	Part Number	Qty	Name	Validity	EL
	1089 9556 44	1	FAN WITH FILTER	**(12/12/2018 - 24/02/2019)** ((((CAPPRM:AS1210 , CAPPRM:CE , CAPPRM:MHLW , CAPPRM:MOM) + MOVOL:400V , (CAPPRM:CE + MOVOL:500V , CAPPRM:MHLW + MOVOL:200V) + COOL:AIR) + FREQ:50HZ , (CAPPRM:ASME , CAPPRM:MHLW) + FREQ:60HZ + MOVOL:460V) + CAPPRE:IEC , ((MOVOL:230V , MOVOL:575V) + COOL:AIR , MOVOL:460V) + CAPPRE:ULCUL + CAPPRM:ASME + FREQ:60HZ) **(25/02/2019 - 24/07/2019)** (((((CAPPRM:AS1210 , CAPPRM:CE , CAPPRM:MHLW , CAPPRM:MOM) + MOVOL:400V , CAPPRM:CE + MOVOL:500V , CAPPRM:MHLW + MOVOL:200V) + FREQ:50HZ , (CAPPRM:ASME , CAPPRM:MHLW) + FREQ:60HZ + MOVOL:460V) + CAPPRE:IEC , (MOVOL:230V , MOVOL:460V , MOVOL:575V) + CAPPRE:ULCUL + CAPPRM:ASME + FREQ:60HZ) + COOL:AIR , CAPPRE:IEC + CAPPRM:MHLW + COOL:WATER + FREQ:60HZ + MOVOL:460V) **(25/07/2019 - 27/11/2019)** ((((CAPPRM:AS1210 , CAPPRM:CE , CAPPRM:MHLW , CAPPRM:MOM) + MOVOL:400V , CAPPRM:CE + MOVOL:500V , CAPPRM:MHLW + MOVOL:200V) + FREQ:50HZ , (CAPPRM:ASME , CAPPRM:MHLW) + FREQ:60HZ + MOVOL:460V) + CAPPRE:IEC , (MOVOL:230V , MOVOL:460V , MOVOL:575V) + CAPPRE:ULCUL + CAPPRM:ASME + FREQ:60HZ) + COOL:AIR	Cubicle fan
	1089 9556 72	4	AIR INLET WITHOUT FILTER	**(12/12/2018 - 24/02/2019)** ((((CAPPRM:AS1210 , CAPPRM:CE , CAPPRM:MHLW , CAPPRM:MOM) + MOVOL:400V , (CAPPRM:CE + MOVOL:500V , CAPPRM:MHLW + MOVOL:200V) + COOL:AIR) + FREQ:50HZ , (CAPPRM:ASME , CAPPRM:MHLW) + FREQ:60HZ + MOVOL:460V) + CAPPRE:IEC , ((MOVOL:230V , MOVOL:575V) + COOL:AIR , MOVOL:460V) + CAPPRE:ULCUL + CAPPRM:ASME + FREQ:60HZ) **(25/02/2019 - 24/07/2019)** (((((CAPPRM:AS1210 , CAPPRM:CE , CAPPRM:MHLW , CAPPRM:MOM) + MOVOL:400V , CAPPRM:CE + MOVOL:500V , CAPPRM:MHLW + MOVOL:200V) + FREQ:50HZ , (CAPPRM:ASME , CAPPRM:MHLW) + FREQ:60HZ + MOVOL:460V) + CAPPRE:IEC , (MOVOL:230V , MOVOL:460V , MOVOL:575V) + CAPPRE:ULCUL + CAPPRM:ASME + FREQ:60HZ) + COOL:AIR , CAPPRE:IEC + CAPPRM:MHLW + COOL:WATER + FREQ:60HZ + MOVOL:460V) **(25/07/2019 - 27/11/2019)** ((((CAPPRM:AS1210 , CAPPRM:CE , CAPPRM:MHLW , CAPPRM:MOM) + MOVOL:400V , CAPPRM:CE + MOVOL:500V , CAPPRM:MHLW + MOVOL:200V) + FREQ:50HZ , (CAPPRM:ASME , CAPPRM:MHLW) + FREQ:60HZ + MOVOL:460V) + CAPPRE:IEC , (MOVOL:230V , MOVOL:460V , MOVOL:575V) + CAPPRE:ULCUL + CAPPRM:ASME + FREQ:60HZ) + COOL:AIR	Filter grid

Legend:

CAPPRE:IEC - Component approval electrical:IEC
CAPPRE:ULCUL - Component approval electrical:UL/cUL
CAPPRM:AS1210 - Component approval mechanical:AS1210
CAPPRM:ASME - Component approval mechanical:ASME
CAPPRM:CE - Component approval mechanical:CE
CAPPRM:MHLW - Component approval mechanical:MHLW
CAPPRM:MOM - Component approval mechanical:MOM
COOL:AIR - Cooling:Air cooled
COOL:WATER - Cooling:Water cooled
FREQ:50HZ - Frequency:50 Hz
FREQ:60HZ - Frequency:60 Hz
IDRY:Y - Integrated dryer:Yes
MODEL:GA75VP_16 - Model:GA 75VSD+
MOVOL:200V - Supply voltage:200 V
MOVOL:230V - Supply voltage:230 V
MOVOL:400V - Supply voltage:400 V
MOVOL:460V - Supply voltage:460 V
MOVOL:500V - Supply voltage:500 V
MOVOL:575V - Supply voltage:575 V

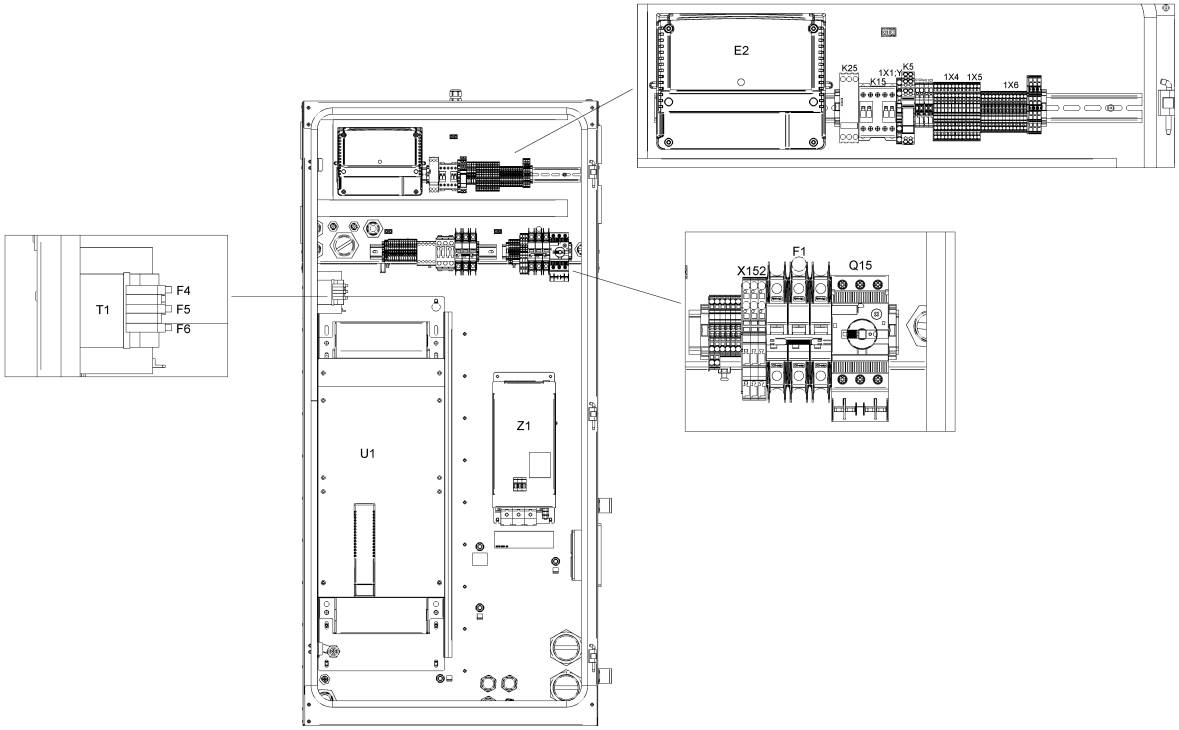
E2
K25
K15
1X1:Y
K5
1X4
1X5
1X6
T1
F4
F5
F6
U1
Z1
X152
F1
Q15

21.9 - Cubicle components GA 75L VSD+ - ((200V-400V-500V/50Hz, 460V/60Hz) - IEC, (230V-460V-575V/60Hz - UL-cUL)) - Full-Feature (12/12/2018 - 27/11/2019)

(((MOVOL:200V , MOVOL:400V , MOVOL:500V) + FREQ:50HZ , FREQ:60HZ + MOVOL:460V) + CAPPRE:IEC , (MOVOL:230V , MOVOL:460V , MOVOL:575V) + CAPPRE:ULCUL + FREQ:60HZ) + IDRY:Y + MODEL:GA75VP_16

Ref	Part Number	Qty	Name	Validity	EL
	1088 0032 09	1	CONNECTOR	**(12/12/2018 - 24/02/2019)** ((((CAPPRM:AS1210 , CAPPRM:CE , CAPPRM:MHLW , CAPPRM:MOM) + MOVOL:400V , (CAPPRM:CE + MOVOL:500V , CAPPRM:MHLW + MOVOL:200V) + COOL:AIR) + FREQ:50HZ , (CAPPRM:ASME , CAPPRM:MHLW) + FREQ:60HZ + MOVOL:460V) + CAPPRE:IEC , ((MOVOL:230V , MOVOL:575V) + COOL:AIR , MOVOL:460V) + CAPPRE:ULCUL + CAPPRM:ASME + FREQ:60HZ) **(25/02/2019 - 24/07/2019)** (((((CAPPRM:AS1210 , CAPPRM:CE , CAPPRM:MHLW , CAPPRM:MOM) + MOVOL:400V , CAPPRM:CE + MOVOL:500V , CAPPRM:MHLW + MOVOL:200V) + FREQ:50HZ , (CAPPRM:ASME , CAPPRM:MHLW) + FREQ:60HZ + MOVOL:460V) + CAPPRE:IEC , (MOVOL:230V , MOVOL:460V , MOVOL:575V) + CAPPRE:ULCUL + CAPPRM:ASME + FREQ:60HZ) + COOL:AIR , CAPPRE:IEC + CAPPRM:MHLW + COOL:WATER + FREQ:60HZ + MOVOL:460V) **(25/07/2019 - 27/11/2019)** ((((CAPPRM:AS1210 , CAPPRM:CE , CAPPRM:MHLW , CAPPRM:MOM) + MOVOL:400V , CAPPRM:CE + MOVOL:500V , CAPPRM:MHLW + MOVOL:200V) + FREQ:50HZ , (CAPPRM:ASME , CAPPRM:MHLW) + FREQ:60HZ + MOVOL:460V) + CAPPRE:IEC , (MOVOL:230V , MOVOL:460V , MOVOL:575V) + CAPPRE:ULCUL + CAPPRM:ASME + FREQ:60HZ) + COOL:AIR	X3
	1089 9572 05	1	LINE FILTER	**(12/12/2018 - 24/02/2019)** ((((CAPPRM:AS1210 , CAPPRM:CE , CAPPRM:MHLW , CAPPRM:MOM) + MOVOL:400V , (CAPPRM:CE + MOVOL:500V , CAPPRM:MHLW + MOVOL:200V) + COOL:AIR) + FREQ:50HZ , (CAPPRM:ASME , CAPPRM:MHLW) + FREQ:60HZ + MOVOL:460V) + CAPPRE:IEC , ((MOVOL:230V , MOVOL:575V) + COOL:AIR , MOVOL:460V) + CAPPRE:ULCUL + CAPPRM:ASME + FREQ:60HZ) **(25/02/2019 - 24/07/2019)** (((((CAPPRM:AS1210 , CAPPRM:CE , CAPPRM:MHLW , CAPPRM:MOM) + MOVOL:400V , CAPPRM:CE + MOVOL:500V , CAPPRM:MHLW + MOVOL:200V) + FREQ:50HZ , (CAPPRM:ASME , CAPPRM:MHLW) + FREQ:60HZ + MOVOL:460V) + CAPPRE:IEC , (MOVOL:230V , MOVOL:460V , MOVOL:575V) + CAPPRE:ULCUL + CAPPRM:ASME + FREQ:60HZ) + COOL:AIR , CAPPRE:IEC + CAPPRM:MHLW + COOL:WATER + FREQ:60HZ + MOVOL:460V) **(25/07/2019 - 27/11/2019)** ((((CAPPRM:AS1210 , CAPPRM:CE , CAPPRM:MHLW , CAPPRM:MOM) + MOVOL:400V , CAPPRM:CE + MOVOL:500V , CAPPRM:MHLW + MOVOL:200V) + FREQ:50HZ , (CAPPRM:ASME , CAPPRM:MHLW) + FREQ:60HZ + MOVOL:460V) + CAPPRE:IEC , (MOVOL:230V , MOVOL:460V , MOVOL:575V) + CAPPRE:ULCUL + CAPPRM:ASME + FREQ:60HZ) + COOL:AIR	Z1 for 75 kw

Electrical legend: Z1 for 75 kw

Legend:

CAPPRE:IEC - Component approval electrical:IEC
CAPPRE:ULCUL - Component approval electrical:UL/cUL
CAPPRM:AS1210 - Component approval mechanical:AS1210
CAPPRM:ASME - Component approval mechanical:ASME
CAPPRM:CE - Component approval mechanical:CE
CAPPRM:MHLW - Component approval mechanical:MHLW
CAPPRM:MOM - Component approval mechanical:MOM
COOL:AIR - Cooling:Air cooled
COOL:WATER - Cooling:Water cooled
FREQ:50HZ - Frequency:50 Hz
FREQ:60HZ - Frequency:60 Hz
IDRY:Y - Integrated dryer:Yes
MODEL:GA75VP_16 - Model:GA 75VSD+
MOVOL:200V - Supply voltage:200 V
MOVOL:230V - Supply voltage:230 V
MOVOL:400V - Supply voltage:400 V
MOVOL:460V - Supply voltage:460 V
MOVOL:500V - Supply voltage:500 V
MOVOL:575V - Supply voltage:575 V

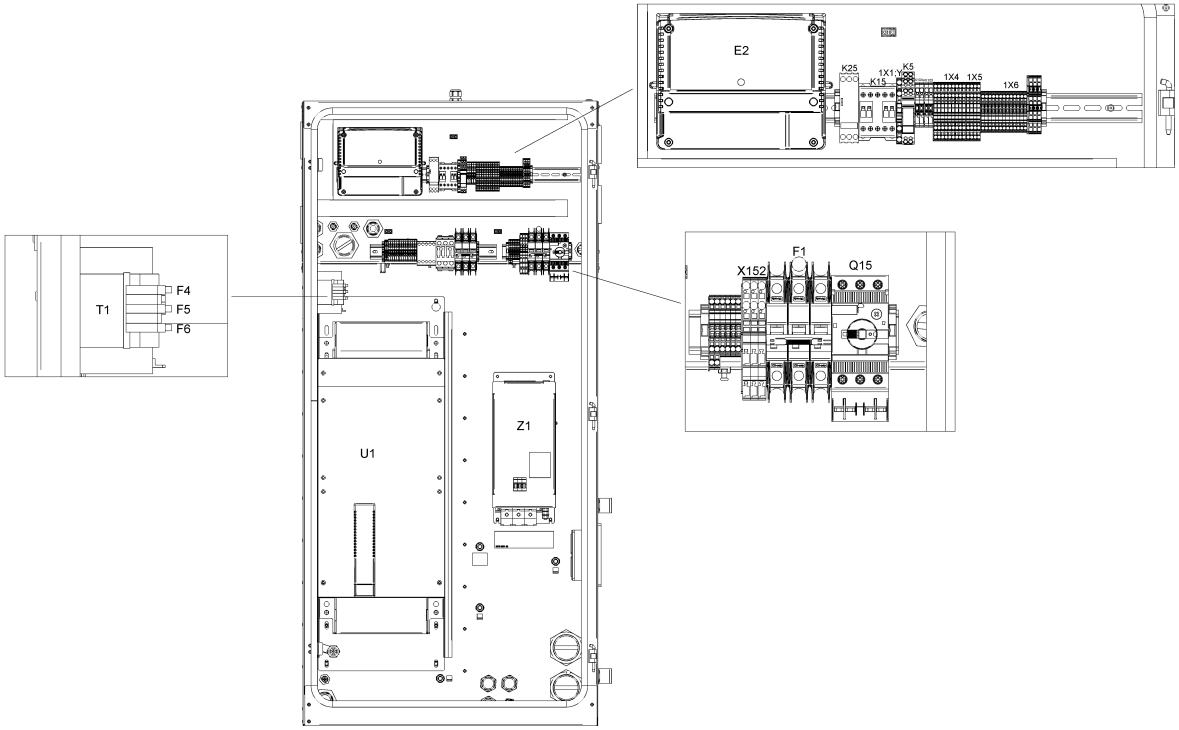
E2
K25
K15
1X1:Y
K5
1X4
1X5
1X6
T1
F4
F5
F6
U1
Z1
X152
F1
Q15

Ref	Part Number	Qty	Name	Validity	EL
	1089 9562 04	1	STRAP	**(12/12/2018 - 24/02/2019)** ((((CAPPRM:AS1210 , CAPPRM:CE , CAPPRM:MHLW , CAPPRM:MOM) + MOVOL:400V , (CAPPRM:CE + MOVOL:500V , CAPPRM:MHLW + MOVOL:200V) + COOL:AIR) + FREQ:50HZ , (CAPPRM:ASME , CAPPRM:MHLW) + FREQ:60HZ + MOVOL:460V) + CAPPRE:IEC , ((MOVOL:230V , MOVOL:575V) + COOL:AIR , MOVOL:460V) + CAPPRE:ULCUL + CAPPRM:ASME + FREQ:60HZ) **(25/02/2019 - 24/07/2019)** (((((CAPPRM:AS1210 , CAPPRM:CE , CAPPRM:MHLW , CAPPRM:MOM) + MOVOL:400V , CAPPRM:CE + MOVOL:500V , CAPPRM:MHLW + MOVOL:200V) + FREQ:50HZ , (CAPPRM:ASME , CAPPRM:MHLW) + FREQ:60HZ + MOVOL:460V) + CAPPRE:IEC , (MOVOL:230V , MOVOL:460V , MOVOL:575V) + CAPPRE:ULCUL + CAPPRM:ASME + FREQ:60HZ) + COOL:AIR , CAPPRE:IEC + CAPPRM:MHLW + COOL:WATER + FREQ:60HZ + MOVOL:460V) **(25/07/2019 - 27/11/2019)** ((((CAPPRM:AS1210 , CAPPRM:CE , CAPPRM:MHLW , CAPPRM:MOM) + MOVOL:400V , CAPPRM:CE + MOVOL:500V , CAPPRM:MHLW + MOVOL:200V) + FREQ:50HZ , (CAPPRM:ASME , CAPPRM:MHLW) + FREQ:60HZ + MOVOL:460V) + CAPPRE:IEC , (MOVOL:230V , MOVOL:460V , MOVOL:575V) + CAPPRE:ULCUL + CAPPRM:ASME + FREQ:60HZ) + COOL:AIR	HF-screen
	1089 9514 56	1	TRANSFORMER	**(12/12/2018 - 24/02/2019)** ((((CAPPRM:AS1210 , CAPPRM:CE , CAPPRM:MHLW , CAPPRM:MOM) + MOVOL:400V , (CAPPRM:CE + MOVOL:500V , CAPPRM:MHLW + MOVOL:200V) + COOL:AIR) + FREQ:50HZ , (CAPPRM:ASME , CAPPRM:MHLW) + FREQ:60HZ + MOVOL:460V) + CAPPRE:IEC , ((MOVOL:230V , MOVOL:575V) + COOL:AIR , MOVOL:460V) + CAPPRE:ULCUL + CAPPRM:ASME + FREQ:60HZ) **(25/02/2019 - 24/07/2019)** (((((CAPPRM:AS1210 , CAPPRM:CE , CAPPRM:MHLW , CAPPRM:MOM) + MOVOL:400V , CAPPRM:CE + MOVOL:500V , CAPPRM:MHLW + MOVOL:200V) + FREQ:50HZ , (CAPPRM:ASME , CAPPRM:MHLW) + FREQ:60HZ + MOVOL:460V) + CAPPRE:IEC , (MOVOL:230V , MOVOL:460V , MOVOL:575V) + CAPPRE:ULCUL + CAPPRM:ASME + FREQ:60HZ) + COOL:AIR , CAPPRE:IEC + CAPPRM:MHLW + COOL:WATER + FREQ:60HZ + MOVOL:460V) **(25/07/2019 - 27/11/2019)** ((((CAPPRM:AS1210 , CAPPRM:CE , CAPPRM:MHLW , CAPPRM:MOM) + MOVOL:400V , CAPPRM:CE + MOVOL:500V , CAPPRM:MHLW + MOVOL:200V) + FREQ:50HZ , (CAPPRM:ASME , CAPPRM:MHLW) + FREQ:60HZ + MOVOL:460V) + CAPPRE:IEC , (MOVOL:230V , MOVOL:460V , MOVOL:575V) + CAPPRE:ULCUL + CAPPRM:ASME + FREQ:60HZ) + COOL:AIR	T1

Legend:

CAPPRE:IEC - Component approval electrical:IEC
CAPPRE:ULCUL - Component approval electrical:UL/cUL
CAPPRM:AS1210 - Component approval mechanical:AS1210
CAPPRM:ASME - Component approval mechanical:ASME
CAPPRM:CE - Component approval mechanical:CE
CAPPRM:MHLW - Component approval mechanical:MHLW
CAPPRM:MOM - Component approval mechanical:MOM
COOL:AIR - Cooling:Air cooled
COOL:WATER - Cooling:Water cooled
FREQ:50HZ - Frequency:50 Hz
FREQ:60HZ - Frequency:60 Hz
IDRY:Y - Integrated dryer:Yes
MODEL:GA75VP_16 - Model:GA 75VSD+
MOVOL:200V - Supply voltage:200 V
MOVOL:230V - Supply voltage:230 V
MOVOL:400V - Supply voltage:400 V
MOVOL:460V - Supply voltage:460 V
MOVOL:500V - Supply voltage:500 V
MOVOL:575V - Supply voltage:575 V

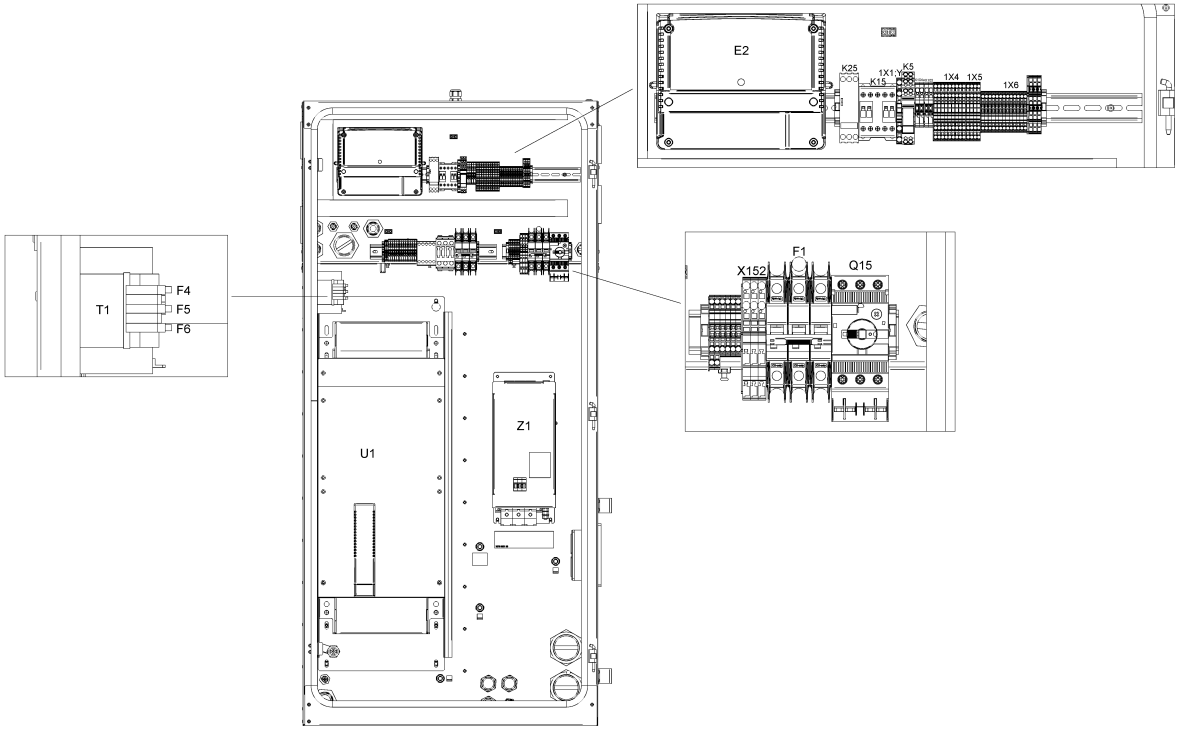
E2
K25
K15
1X1:Y
K5
1X4
1X5
1X6
T1
F4
F5
F6
U1
Z1
X152
F1
Q15

21.9 - Cubicle components GA 75L VSD+ - ((200V-400V-500V/50Hz, 460V/60Hz) - IEC, (230V-460V-575V/60Hz - UL-cUL)) - Full-Feature (12/12/2018 - 27/11/2019)

(((MOVOL:200V , MOVOL:400V , MOVOL:500V) + FREQ:50HZ , FREQ:60HZ + MOVOL:460V) + CAPPRE:IEC , (MOVOL:230V , MOVOL:460V , MOVOL:575V) + CAPPRE:ULCUL + FREQ:60HZ) + IDRY:Y + MODEL:GA75VP_16

Ref	Part Number	Qty	Name	Validity	EL
	1089 9522 26	1	CIRCUIT BREAKER	**(12/12/2018 - 24/02/2019)** ((((CAPPRM:AS1210 , CAPPRM:CE , CAPPRM:MHLW , CAPPRM:MOM) + MOVOL:400V , (CAPPRM:CE + MOVOL:500V , CAPPRM:MHLW + MOVOL:200V) + COOL:AIR) + FREQ:50HZ , (CAPPRM:ASME , CAPPRM:MHLW) + FREQ:60HZ + MOVOL:460V) + CAPPRE:IEC , ((MOVOL:230V , MOVOL:575V) + COOL:AIR , MOVOL:460V) + CAPPRE:ULCUL + CAPPRM:ASME + FREQ:60HZ) **(25/02/2019 - 24/07/2019)** (((((CAPPRM:AS1210 , CAPPRM:CE , CAPPRM:MHLW , CAPPRM:MOM) + MOVOL:400V , CAPPRM:CE + MOVOL:500V , CAPPRM:MHLW + MOVOL:200V) + FREQ:50HZ , (CAPPRM:ASME , CAPPRM:MHLW) + FREQ:60HZ + MOVOL:460V) + CAPPRE:IEC , (MOVOL:230V , MOVOL:460V , MOVOL:575V) + CAPPRE:ULCUL + CAPPRM:ASME + FREQ:60HZ) + COOL:AIR , CAPPRE:IEC + CAPPRM:MHLW + COOL:WATER + FREQ:60HZ + MOVOL:460V) **(25/07/2019 - 27/11/2019)** ((((CAPPRM:AS1210 , CAPPRM:CE , CAPPRM:MHLW , CAPPRM:MOM) + MOVOL:400V , CAPPRM:CE + MOVOL:500V , CAPPRM:MHLW + MOVOL:200V) + FREQ:50HZ , (CAPPRM:ASME , CAPPRM:MHLW) + FREQ:60HZ + MOVOL:460V) + CAPPRE:IEC , (MOVOL:230V , MOVOL:460V , MOVOL:575V) + CAPPRE:ULCUL + CAPPRM:ASME + FREQ:60HZ) + COOL:AIR	F1
	1089 9513 41	1	BUTTON PUSH	**(12/12/2018 - 24/02/2019)** ((((CAPPRM:AS1210 , CAPPRM:CE , CAPPRM:MHLW , CAPPRM:MOM) + MOVOL:400V , (CAPPRM:CE + MOVOL:500V , CAPPRM:MHLW + MOVOL:200V) + COOL:AIR) + FREQ:50HZ , (CAPPRM:ASME , CAPPRM:MHLW) + FREQ:60HZ + MOVOL:460V) + CAPPRE:IEC , ((MOVOL:230V , MOVOL:575V) + COOL:AIR , MOVOL:460V) + CAPPRE:ULCUL + CAPPRM:ASME + FREQ:60HZ) **(25/02/2019 - 24/07/2019)** (((((CAPPRM:AS1210 , CAPPRM:CE , CAPPRM:MHLW , CAPPRM:MOM) + MOVOL:400V , CAPPRM:CE + MOVOL:500V , CAPPRM:MHLW + MOVOL:200V) + FREQ:50HZ , (CAPPRM:ASME , CAPPRM:MHLW) + FREQ:60HZ + MOVOL:460V) + CAPPRE:IEC , (MOVOL:230V , MOVOL:460V , MOVOL:575V) + CAPPRE:ULCUL + CAPPRM:ASME + FREQ:60HZ) + COOL:AIR , CAPPRE:IEC + CAPPRM:MHLW + COOL:WATER + FREQ:60HZ + MOVOL:460V) **(25/07/2019 - 27/11/2019)** ((((CAPPRM:AS1210 , CAPPRM:CE , CAPPRM:MHLW , CAPPRM:MOM) + MOVOL:400V , CAPPRM:CE + MOVOL:500V , CAPPRM:MHLW + MOVOL:200V) + FREQ:50HZ , (CAPPRM:ASME , CAPPRM:MHLW) + FREQ:60HZ + MOVOL:460V) + CAPPRE:IEC , (MOVOL:230V , MOVOL:460V , MOVOL:575V) + CAPPRE:ULCUL + CAPPRM:ASME + FREQ:60HZ) + COOL:AIR	S3

Legend:

CAPPRE:IEC - Component approval electrical:IEC
CAPPRE:ULCUL - Component approval electrical:UL/cUL
CAPPRM:AS1210 - Component approval mechanical:AS1210
CAPPRM:ASME - Component approval mechanical:ASME
CAPPRM:CE - Component approval mechanical:CE
CAPPRM:MHLW - Component approval mechanical:MHLW
CAPPRM:MOM - Component approval mechanical:MOM
COOL:AIR - Cooling:Air cooled
COOL:WATER - Cooling:Water cooled
FREQ:50HZ - Frequency:50 Hz
FREQ:60HZ - Frequency:60 Hz
IDRY:Y - Integrated dryer:Yes
MODEL:GA75VP_16 - Model:GA 75VSD+
MOVOL:200V - Supply voltage:200 V
MOVOL:230V - Supply voltage:230 V
MOVOL:400V - Supply voltage:400 V
MOVOL:460V - Supply voltage:460 V
MOVOL:500V - Supply voltage:500 V
MOVOL:575V - Supply voltage:575 V

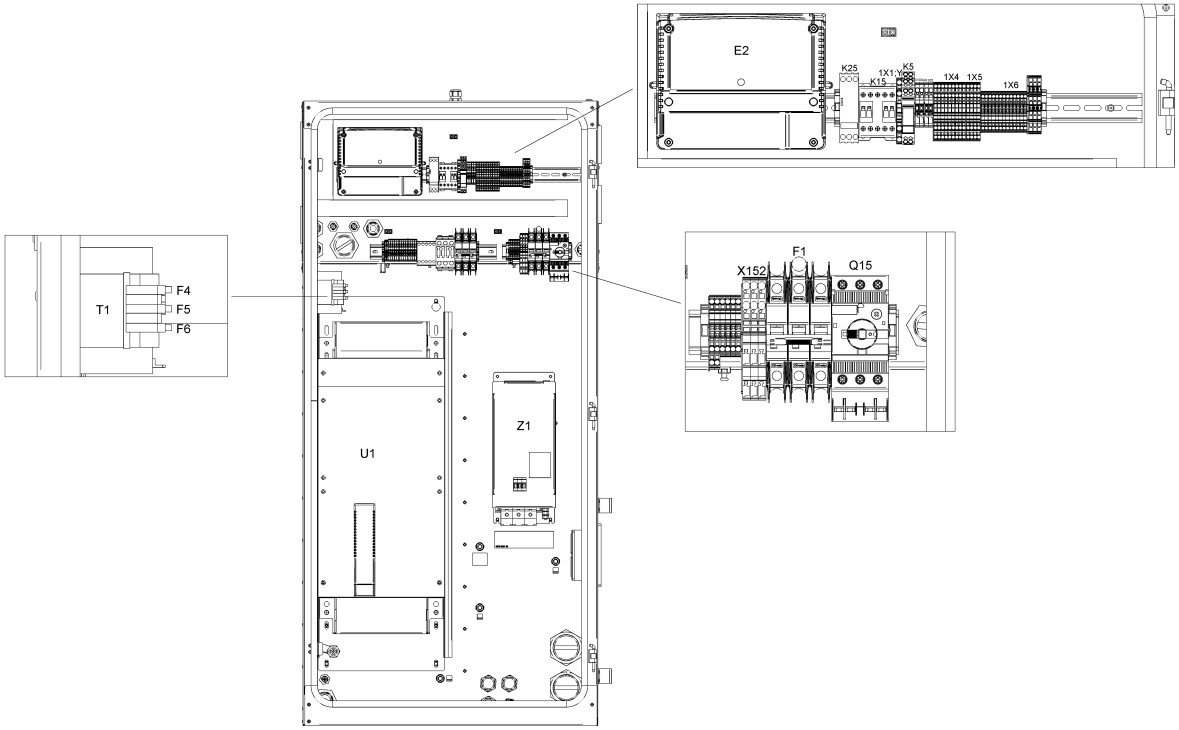
E2
K25
K15
1X1:Y
K5
1X4
1X5
1X6
T1
F4
F5
F6
U1
Z1
X152
F1
Q15

Ref	Part Number	Qty	Name	Validity	EL
	1089 9513 28	1	HOLDER	**(12/12/2018 - 24/02/2019)** ((((CAPPRM:AS1210 , CAPPRM:CE , CAPPRM:MHLW , CAPPRM:MOM) + MOVOL:400V , (CAPPRM:CE + MOVOL:500V , CAPPRM:MHLW + MOVOL:200V) + COOL:AIR) + FREQ:50HZ , (CAPPRM:ASME , CAPPRM:MHLW) + FREQ:60HZ + MOVOL:460V) + CAPPRE:IEC , ((MOVOL:230V , MOVOL:575V) + COOL:AIR , MOVOL:460V) + CAPPRE:ULCUL + CAPPRM:ASME + FREQ:60HZ) **(25/02/2019 - 24/07/2019)** (((((CAPPRM:AS1210 , CAPPRM:CE , CAPPRM:MHLW , CAPPRM:MOM) + MOVOL:400V , CAPPRM:CE + MOVOL:500V , CAPPRM:MHLW + MOVOL:200V) + FREQ:50HZ , (CAPPRM:ASME , CAPPRM:MHLW) + FREQ:60HZ + MOVOL:460V) + CAPPRE:IEC , (MOVOL:230V , MOVOL:460V , MOVOL:575V) + CAPPRE:ULCUL + CAPPRM:ASME + FREQ:60HZ) + COOL:AIR , CAPPRE:IEC + CAPPRM:MHLW + COOL:WATER + FREQ:60HZ + MOVOL:460V) **(25/07/2019 - 27/11/2019)** ((((CAPPRM:AS1210 , CAPPRM:CE , CAPPRM:MHLW , CAPPRM:MOM) + MOVOL:400V , CAPPRM:CE + MOVOL:500V , CAPPRM:MHLW + MOVOL:200V) + FREQ:50HZ , (CAPPRM:ASME , CAPPRM:MHLW) + FREQ:60HZ + MOVOL:460V) + CAPPRE:IEC , (MOVOL:230V , MOVOL:460V , MOVOL:575V) + CAPPRE:ULCUL + CAPPRM:ASME + FREQ:60HZ) + COOL:AIR	S3
	~~1089 9513 30~~	4	CONTACTOR	**(12/12/2018 - 24/02/2019)** ((((CAPPRM:AS1210 , CAPPRM:CE , CAPPRM:MHLW , CAPPRM:MOM) + MOVOL:400V , (CAPPRM:CE + MOVOL:500V , CAPPRM:MHLW + MOVOL:200V) + COOL:AIR) + FREQ:50HZ , (CAPPRM:ASME , CAPPRM:MHLW) + FREQ:60HZ + MOVOL:460V) + CAPPRE:IEC , ((MOVOL:230V , MOVOL:575V) + COOL:AIR , MOVOL:460V) + CAPPRE:ULCUL + CAPPRM:ASME + FREQ:60HZ) **(25/02/2019 - 24/07/2019)** (((((CAPPRM:AS1210 , CAPPRM:CE , CAPPRM:MHLW , CAPPRM:MOM) + MOVOL:400V , CAPPRM:CE + MOVOL:500V , CAPPRM:MHLW + MOVOL:200V) + FREQ:50HZ , (CAPPRM:ASME , CAPPRM:MHLW) + FREQ:60HZ + MOVOL:460V) + CAPPRE:IEC , (MOVOL:230V , MOVOL:460V , MOVOL:575V) + CAPPRE:ULCUL + CAPPRM:ASME + FREQ:60HZ) + COOL:AIR , CAPPRE:IEC + CAPPRM:MHLW + COOL:WATER + FREQ:60HZ + MOVOL:460V) **(25/07/2019 - 27/11/2019)** ((((CAPPRM:AS1210 , CAPPRM:CE , CAPPRM:MHLW , CAPPRM:MOM) + MOVOL:400V , CAPPRM:CE + MOVOL:500V , CAPPRM:MHLW + MOVOL:200V) + FREQ:50HZ , (CAPPRM:ASME , CAPPRM:MHLW) + FREQ:60HZ + MOVOL:460V) + CAPPRE:IEC , (MOVOL:230V , MOVOL:460V , MOVOL:575V) + CAPPRE:ULCUL + CAPPRM:ASME + FREQ:60HZ) + COOL:AIR	S3
	Substituted by:	1089 9513 04 - CONTACT BLOCK (quantity: 1)			
	1088 0031 02	1	CONNECTOR 2-POLE	**(12/12/2018 - 17/02/2019)** ((((CAPPRM:AS1210 , CAPPRM:CE , CAPPRM:MHLW , CAPPRM:MOM) + MOVOL:400V , (CAPPRM:CE + MOVOL:500V , CAPPRM:MHLW + MOVOL:200V) + COOL:AIR) + FREQ:50HZ , (CAPPRM:ASME , CAPPRM:MHLW) + FREQ:60HZ + MOVOL:460V) + CAPPRE:IEC , ((MOVOL:230V , MOVOL:575V) + COOL:AIR , MOVOL:460V) + CAPPRE:ULCUL + CAPPRM:ASME + FREQ:60HZ)	

Legend:

CAPPRE:IEC - Component approval electrical:IEC
CAPPRM:ASME - Component approval mechanical:ASME
CAPPRM:MOM - Component approval mechanical:MOM
FREQ:50HZ - Frequency:50 Hz
MODEL:GA75VP_16 - Model:GA 75VSD+
MOVOL:400V - Supply voltage:400 V
MOVOL:575V - Supply voltage:575 V
CAPPRE:ULCUL - Component approval electrical:UL/cUL
CAPPRM:CE - Component approval mechanical:CE
COOL:AIR - Cooling:Air cooled
FREQ:60HZ - Frequency:60 Hz
MOVOL:200V - Supply voltage:200 V
MOVOL:460V - Supply voltage:460 V
CAPPRM:AS1210 - Component approval mechanical:AS1210
CAPPRM:MHLW - Component approval mechanical:MHLW
COOL:WATER - Cooling:Water cooled
IDRY:Y - Integrated dryer:Yes
MOVOL:230V - Supply voltage:230 V
MOVOL:500V - Supply voltage:500 V

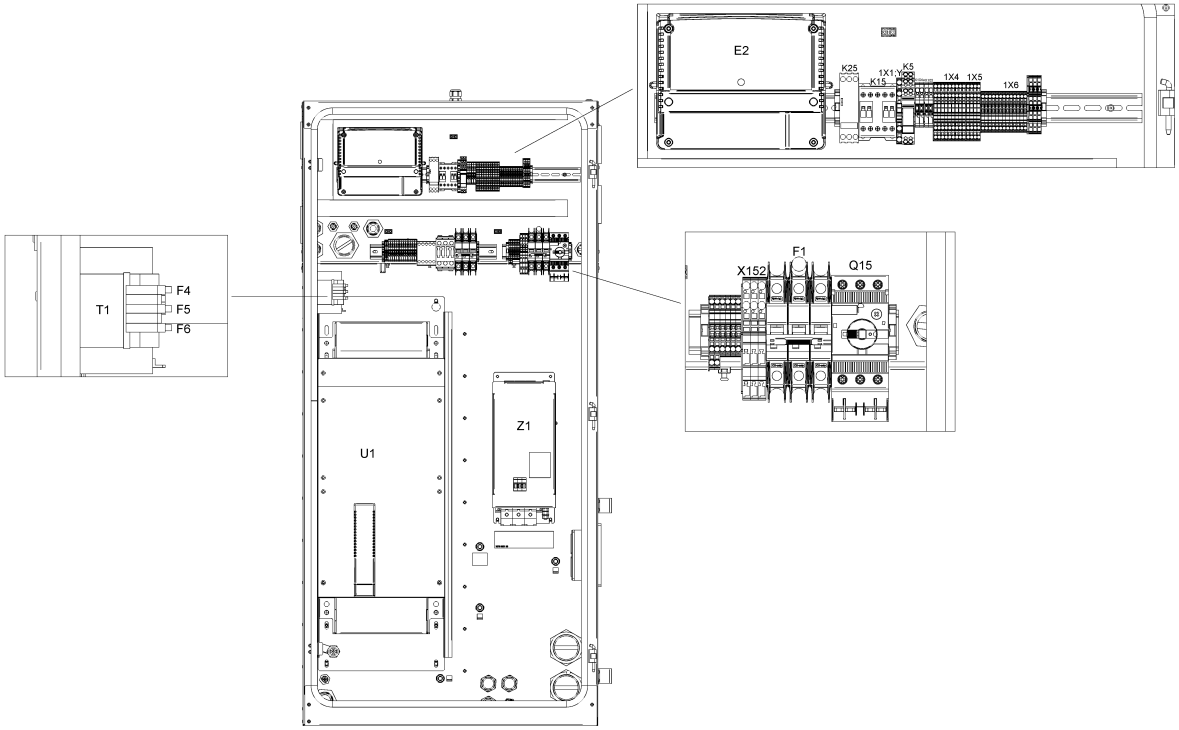
E2
K25
K15
1X1:Y
K5
1X4
1X5
1X6
T1
F4
F5
F6
U1
Z1
X152
F1
Q15

21.9 - Cubicle components GA 75L VSD+ - ((200V-400V-500V/50Hz, 460V/60Hz) - IEC, (230V-460V-575V/60Hz - UL-cUL)) - Full-Feature (12/12/2018 - 27/11/2019)

(((MOVOL:200V , MOVOL:400V , MOVOL:500V) + FREQ:50HZ , FREQ:60HZ + MOVOL:460V) + CAPPRE:IEC , (MOVOL:230V , MOVOL:460V , MOVOL:575V) + CAPPRE:ULCUL + FREQ:60HZ) + IDRY:Y + MODEL:GA75VP_16

Ref	Part Number	Qty	Name	Validity	EL
	1088 0039 07	3	TERMINAL	**(12/12/2018 - 24/02/2019)** ((((CAPPRM:AS1210 , CAPPRM:CE , CAPPRM:MHLW , CAPPRM:MOM) + MOVOL:400V , (CAPPRM:CE + MOVOL:500V , CAPPRM:MHLW + MOVOL:200V) + COOL:AIR) + FREQ:50HZ , (CAPPRM:ASME , CAPPRM:MHLW) + FREQ:60HZ + MOVOL:460V) + CAPPRE:IEC , ((MOVOL:230V , MOVOL:575V) + COOL:AIR , MOVOL:460V) + CAPPRE:ULCUL + CAPPRM:ASME + FREQ:60HZ) **(25/02/2019 - 24/07/2019)** (((((CAPPRM:AS1210 , CAPPRM:CE , CAPPRM:MHLW , CAPPRM:MOM) + MOVOL:400V , CAPPRM:CE + MOVOL:500V , CAPPRM:MHLW + MOVOL:200V) + FREQ:50HZ , (CAPPRM:ASME , CAPPRM:MHLW) + FREQ:60HZ + MOVOL:460V) + CAPPRE:IEC , (MOVOL:230V , MOVOL:460V , MOVOL:575V) + CAPPRE:ULCUL + CAPPRM:ASME + FREQ:60HZ) + COOL:AIR , CAPPRE:IEC + CAPPRM:MHLW + COOL:WATER + FREQ:60HZ + MOVOL:460V) **(25/07/2019 - 27/11/2019)** ((((CAPPRM:AS1210 , CAPPRM:CE , CAPPRM:MHLW , CAPPRM:MOM) + MOVOL:400V , CAPPRM:CE + MOVOL:500V , CAPPRM:MHLW + MOVOL:200V) + FREQ:50HZ , (CAPPRM:ASME , CAPPRM:MHLW) + FREQ:60HZ + MOVOL:460V) + CAPPRE:IEC , (MOVOL:230V , MOVOL:460V , MOVOL:575V) + CAPPRE:ULCUL + CAPPRM:ASME + FREQ:60HZ) + COOL:AIR	X152
	1088 0039 05	1	PLATE	**(12/12/2018 - 24/02/2019)** ((((CAPPRM:AS1210 , CAPPRM:CE , CAPPRM:MHLW , CAPPRM:MOM) + MOVOL:400V , (CAPPRM:CE + MOVOL:500V , CAPPRM:MHLW + MOVOL:200V) + COOL:AIR) + FREQ:50HZ , (CAPPRM:ASME , CAPPRM:MHLW) + FREQ:60HZ + MOVOL:460V) + CAPPRE:IEC , ((MOVOL:230V , MOVOL:575V) + COOL:AIR , MOVOL:460V) + CAPPRE:ULCUL + CAPPRM:ASME + FREQ:60HZ) **(25/02/2019 - 24/07/2019)** (((((CAPPRM:AS1210 , CAPPRM:CE , CAPPRM:MHLW , CAPPRM:MOM) + MOVOL:400V , CAPPRM:CE + MOVOL:500V , CAPPRM:MHLW + MOVOL:200V) + FREQ:50HZ , (CAPPRM:ASME , CAPPRM:MHLW) + FREQ:60HZ + MOVOL:460V) + CAPPRE:IEC , (MOVOL:230V , MOVOL:460V , MOVOL:575V) + CAPPRE:ULCUL + CAPPRM:ASME + FREQ:60HZ) + COOL:AIR , CAPPRE:IEC + CAPPRM:MHLW + COOL:WATER + FREQ:60HZ + MOVOL:460V) **(25/07/2019 - 27/11/2019)** ((((CAPPRM:AS1210 , CAPPRM:CE , CAPPRM:MHLW , CAPPRM:MOM) + MOVOL:400V , CAPPRM:CE + MOVOL:500V , CAPPRM:MHLW + MOVOL:200V) + FREQ:50HZ , (CAPPRM:ASME , CAPPRM:MHLW) + FREQ:60HZ + MOVOL:460V) + CAPPRE:IEC , (MOVOL:230V , MOVOL:460V , MOVOL:575V) + CAPPRE:ULCUL + CAPPRM:ASME + FREQ:60HZ) + COOL:AIR	X152

Legend:

CAPPRE:IEC - Component approval electrical:IEC
CAPPRE:ULCUL - Component approval electrical:UL/cUL
CAPPRM:AS1210 - Component approval mechanical:AS1210
CAPPRM:ASME - Component approval mechanical:ASME
CAPPRM:CE - Component approval mechanical:CE
CAPPRM:MHLW - Component approval mechanical:MHLW
CAPPRM:MOM - Component approval mechanical:MOM
COOL:AIR - Cooling:Air cooled
COOL:WATER - Cooling:Water cooled
FREQ:50HZ - Frequency:50 Hz
FREQ:60HZ - Frequency:60 Hz
IDRY:Y - Integrated dryer:Yes
MODEL:GA75VP_16 - Model:GA 75VSD+
MOVOL:200V - Supply voltage:200 V
MOVOL:230V - Supply voltage:230 V
MOVOL:400V - Supply voltage:400 V
MOVOL:460V - Supply voltage:460 V
MOVOL:500V - Supply voltage:500 V
MOVOL:575V - Supply voltage:575 V

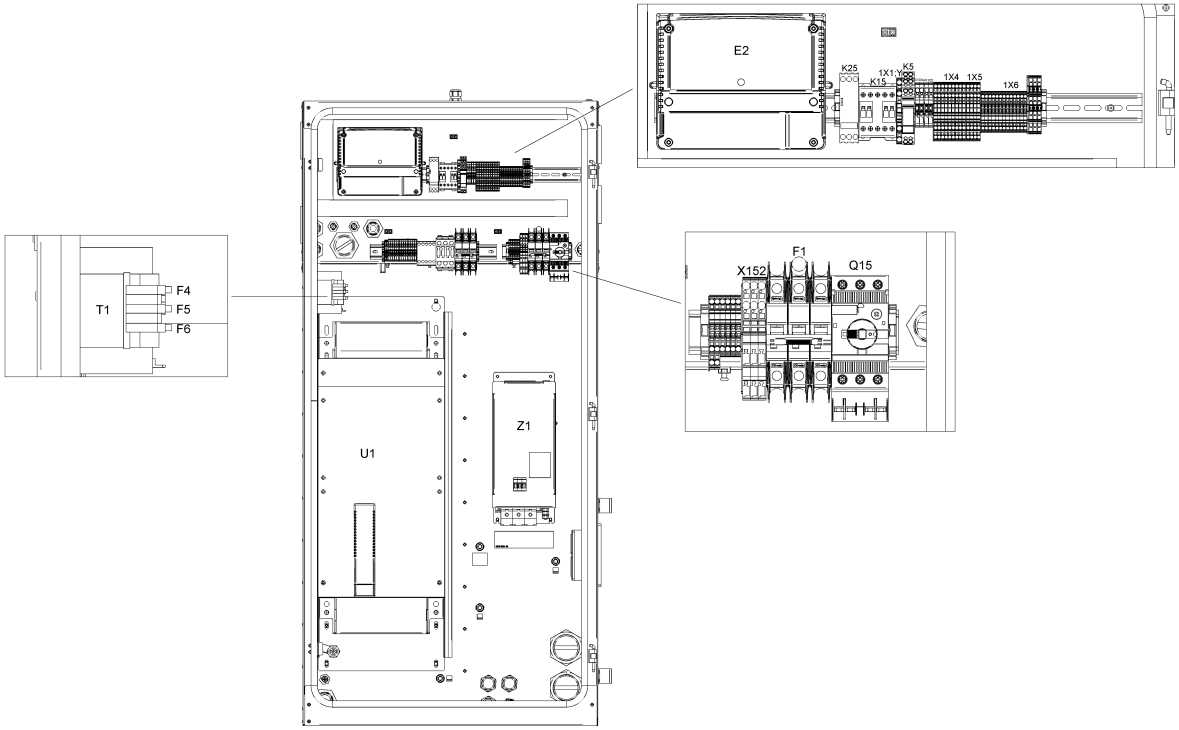
E2
K25
K15
1X1:Y
K5
1X4
1X5
1X6
T1
F4
F5
F6
U1
Z1
X152
F1
Q15

21.9 - Cubicle components GA 75L VSD+ - ((200V-400V-500V/50Hz, 460V/60Hz) - IEC, (230V-460V-575V/60Hz - UL-cUL)) - Full-Feature (12/12/2018 - 27/11/2019)

(((MOVOL:200V , MOVOL:400V , MOVOL:500V) + FREQ:50HZ , FREQ:60HZ + MOVOL:460V) + CAPPRE:IEC , (MOVOL:230V , MOVOL:460V , MOVOL:575V) + CAPPRE:ULCUL + FREQ:60HZ) + IDRY:Y + MODEL:GA75VP_16

Ref	Part Number	Qty	Name	Validity	EL
	1088 0039 26	1	CONNECTOR	**(12/12/2018 - 24/02/2019)** ((((CAPPRM:AS1210 , CAPPRM:CE , CAPPRM:MHLW , CAPPRM:MOM) + MOVOL:400V , (CAPPRM:CE + MOVOL:500V , CAPPRM:MHLW + MOVOL:200V) + COOL:AIR) + FREQ:50HZ , (CAPPRM:ASME , CAPPRM:MHLW) + FREQ:60HZ + MOVOL:460V) + CAPPRE:IEC , ((MOVOL:230V , MOVOL:575V) + COOL:AIR , MOVOL:460V) + CAPPRE:ULCUL + CAPPRM:ASME + FREQ:60HZ) **(25/02/2019 - 24/07/2019)** (((((CAPPRM:AS1210 , CAPPRM:CE , CAPPRM:MHLW , CAPPRM:MOM) + MOVOL:400V , CAPPRM:CE + MOVOL:500V , CAPPRM:MHLW + MOVOL:200V) + FREQ:50HZ , (CAPPRM:ASME , CAPPRM:MHLW) + FREQ:60HZ + MOVOL:460V) + CAPPRE:IEC , (MOVOL:230V , MOVOL:460V , MOVOL:575V) + CAPPRE:ULCUL + CAPPRM:ASME + FREQ:60HZ) + COOL:AIR , CAPPRE:IEC + CAPPRM:MHLW + COOL:WATER + FREQ:60HZ + MOVOL:460V) **(25/07/2019 - 27/11/2019)** ((((CAPPRM:AS1210 , CAPPRM:CE , CAPPRM:MHLW , CAPPRM:MOM) + MOVOL:400V , CAPPRM:CE + MOVOL:500V , CAPPRM:MHLW + MOVOL:200V) + FREQ:50HZ , (CAPPRM:ASME , CAPPRM:MHLW) + FREQ:60HZ + MOVOL:460V) + CAPPRE:IEC , (MOVOL:230V , MOVOL:460V , MOVOL:575V) + CAPPRE:ULCUL + CAPPRM:ASME + FREQ:60HZ) + COOL:AIR	
	Electrical legend:	X152 (remove coding pin 1,3)			
	1088 0037 99	4	PIN	**(12/12/2018 - 24/02/2019)** ((((CAPPRM:AS1210 , CAPPRM:CE , CAPPRM:MHLW , CAPPRM:MOM) + MOVOL:400V , (CAPPRM:CE + MOVOL:500V , CAPPRM:MHLW + MOVOL:200V) + COOL:AIR) + FREQ:50HZ , (CAPPRM:ASME , CAPPRM:MHLW) + FREQ:60HZ + MOVOL:460V) + CAPPRE:IEC , ((MOVOL:230V , MOVOL:575V) + COOL:AIR , MOVOL:460V) + CAPPRE:ULCUL + CAPPRM:ASME + FREQ:60HZ) **(25/02/2019 - 24/07/2019)** (((((CAPPRM:AS1210 , CAPPRM:CE , CAPPRM:MHLW , CAPPRM:MOM) + MOVOL:400V , CAPPRM:CE + MOVOL:500V , CAPPRM:MHLW + MOVOL:200V) + FREQ:50HZ , (CAPPRM:ASME , CAPPRM:MHLW) + FREQ:60HZ + MOVOL:460V) + CAPPRE:IEC , (MOVOL:230V , MOVOL:460V , MOVOL:575V) + CAPPRE:ULCUL + CAPPRM:ASME + FREQ:60HZ) + COOL:AIR , CAPPRE:IEC + CAPPRM:MHLW + COOL:WATER + FREQ:60HZ + MOVOL:460V) **(25/07/2019 - 27/11/2019)** ((((CAPPRM:AS1210 , CAPPRM:CE , CAPPRM:MHLW , CAPPRM:MOM) + MOVOL:400V , CAPPRM:CE + MOVOL:500V , CAPPRM:MHLW + MOVOL:200V) + FREQ:50HZ , (CAPPRM:ASME , CAPPRM:MHLW) + FREQ:60HZ + MOVOL:460V) + CAPPRE:IEC , (MOVOL:230V , MOVOL:460V , MOVOL:575V) + CAPPRE:ULCUL + CAPPRM:ASME + FREQ:60HZ) + COOL:AIR	X152:1; 3

Legend:

CAPPRE:IEC - Component approval electrical:IEC
CAPPRE:ULCUL - Component approval electrical:UL/cUL
CAPPRM:AS1210 - Component approval mechanical:AS1210
CAPPRM:ASME - Component approval mechanical:ASME
CAPPRM:CE - Component approval mechanical:CE
CAPPRM:MHLW - Component approval mechanical:MHLW
CAPPRM:MOM - Component approval mechanical:MOM
COOL:AIR - Cooling:Air cooled
COOL:WATER - Cooling:Water cooled
FREQ:50HZ - Frequency:50 Hz
FREQ:60HZ - Frequency:60 Hz
IDRY:Y - Integrated dryer:Yes
MODEL:GA75VP_16 - Model:GA 75VSD+
MOVOL:200V - Supply voltage:200 V
MOVOL:230V - Supply voltage:230 V
MOVOL:400V - Supply voltage:400 V
MOVOL:460V - Supply voltage:460 V
MOVOL:500V - Supply voltage:500 V
MOVOL:575V - Supply voltage:575 V

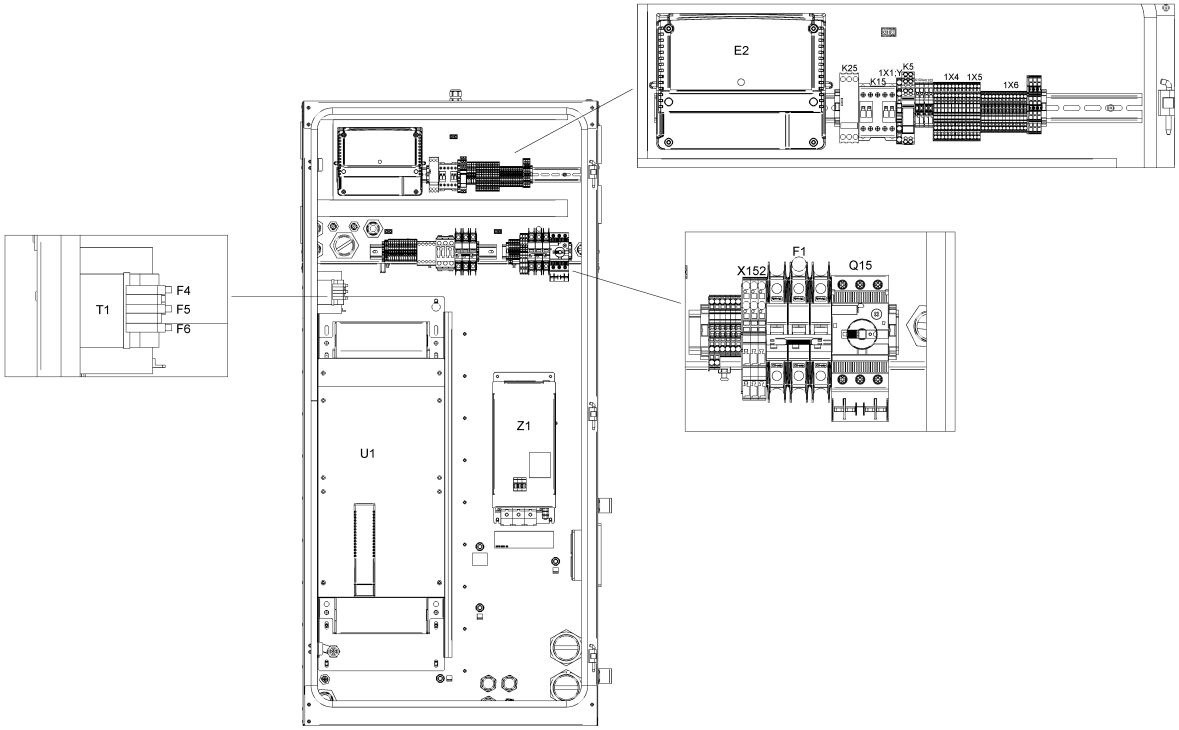
E2
K25
K15
1X1:Y
K5
1X4
1X5
1X6
T1
F4
F5
F6
U1
Z1
X152
F1
Q15

Ref	Part Number	Qty	Name	Validity	EL
	~~1088 0031 81~~	7	END STOP BRACKET 6MM	**(12/12/2018 - 24/02/2019)** ((((CAPPRM:AS1210 , CAPPRM:CE , CAPPRM:MHLW , CAPPRM:MOM) + MOVOL:400V , (CAPPRM:CE + MOVOL:500V , CAPPRM:MHLW + MOVOL:200V) + COOL:AIR) + FREQ:50HZ , (CAPPRM:ASME , CAPPRM:MHLW) + FREQ:60HZ + MOVOL:460V) + CAPPRE:IEC , ((MOVOL:230V , MOVOL:575V) + COOL:AIR , MOVOL:460V) + CAPPRE:ULCUL + CAPPRM:ASME + FREQ:60HZ) **(25/02/2019 - 24/07/2019)** (((((CAPPRM:AS1210 , CAPPRM:CE , CAPPRM:MHLW , CAPPRM:MOM) + MOVOL:400V , CAPPRM:CE + MOVOL:500V , CAPPRM:MHLW + MOVOL:200V) + FREQ:50HZ , (CAPPRM:ASME , CAPPRM:MHLW) + FREQ:60HZ + MOVOL:460V) + CAPPRE:IEC , (MOVOL:230V , MOVOL:460V , MOVOL:575V) + CAPPRE:ULCUL + CAPPRM:ASME + FREQ:60HZ) + COOL:AIR , CAPPRE:IEC + CAPPRM:MHLW + COOL:WATER + FREQ:60HZ + MOVOL:460V) **(25/07/2019 - 27/11/2019)** ((((CAPPRM:AS1210 , CAPPRM:CE , CAPPRM:MHLW , CAPPRM:MOM) + MOVOL:400V , CAPPRM:CE + MOVOL:500V , CAPPRM:MHLW + MOVOL:200V) + FREQ:50HZ , (CAPPRM:ASME , CAPPRM:MHLW) + FREQ:60HZ + MOVOL:460V) + CAPPRE:IEC , (MOVOL:230V , MOVOL:460V , MOVOL:575V) + CAPPRE:ULCUL + CAPPRM:ASME + FREQ:60HZ) + COOL:AIR	
	Electrical legend:	Connector/terminal rail			
	Substituted by:	1089 0577 82 - END RETAINER (quantity: 1)			
	1088 0039 38	2	TERMINAL	**(12/12/2018 - 24/02/2019)** ((((CAPPRM:AS1210 , CAPPRM:CE , CAPPRM:MHLW , CAPPRM:MOM) + MOVOL:400V , (CAPPRM:CE + MOVOL:500V , CAPPRM:MHLW + MOVOL:200V) + COOL:AIR) + FREQ:50HZ , (CAPPRM:ASME , CAPPRM:MHLW) + FREQ:60HZ + MOVOL:460V) + CAPPRE:IEC , ((MOVOL:230V , MOVOL:575V) + COOL:AIR , MOVOL:460V) + CAPPRE:ULCUL + CAPPRM:ASME + FREQ:60HZ) **(25/02/2019 - 24/07/2019)** (((((CAPPRM:AS1210 , CAPPRM:CE , CAPPRM:MHLW , CAPPRM:MOM) + MOVOL:400V , CAPPRM:CE + MOVOL:500V , CAPPRM:MHLW + MOVOL:200V) + FREQ:50HZ , (CAPPRM:ASME , CAPPRM:MHLW) + FREQ:60HZ + MOVOL:460V) + CAPPRE:IEC , (MOVOL:230V , MOVOL:460V , MOVOL:575V) + CAPPRE:ULCUL + CAPPRM:ASME + FREQ:60HZ) + COOL:AIR , CAPPRE:IEC + CAPPRM:MHLW + COOL:WATER + FREQ:60HZ + MOVOL:460V) **(25/07/2019 - 27/11/2019)** ((((CAPPRM:AS1210 , CAPPRM:CE , CAPPRM:MHLW , CAPPRM:MOM) + MOVOL:400V , CAPPRM:CE + MOVOL:500V , CAPPRM:MHLW + MOVOL:200V) + FREQ:50HZ , (CAPPRM:ASME , CAPPRM:MHLW) + FREQ:60HZ + MOVOL:460V) + CAPPRE:IEC , (MOVOL:230V , MOVOL:460V , MOVOL:575V) + CAPPRE:ULCUL + CAPPRM:ASME + FREQ:60HZ) + COOL:AIR	1X11:2,5

Legend:

CAPPRE:IEC - Component approval electrical:IEC
CAPPRE:ULCUL - Component approval electrical:UL/cUL
CAPPRM:AS1210 - Component approval mechanical:AS1210
CAPPRM:ASME - Component approval mechanical:ASME
CAPPRM:CE - Component approval mechanical:CE
CAPPRM:MHLW - Component approval mechanical:MHLW
CAPPRM:MOM - Component approval mechanical:MOM
COOL:AIR - Cooling:Air cooled
COOL:WATER - Cooling:Water cooled
FREQ:50HZ - Frequency:50 Hz
FREQ:60HZ - Frequency:60 Hz
IDRY:Y - Integrated dryer:Yes
MODEL:GA75VP_16 - Model:GA 75VSD+
MOVOL:200V - Supply voltage:200 V
MOVOL:230V - Supply voltage:230 V
MOVOL:400V - Supply voltage:400 V
MOVOL:460V - Supply voltage:460 V
MOVOL:500V - Supply voltage:500 V
MOVOL:575V - Supply voltage:575 V

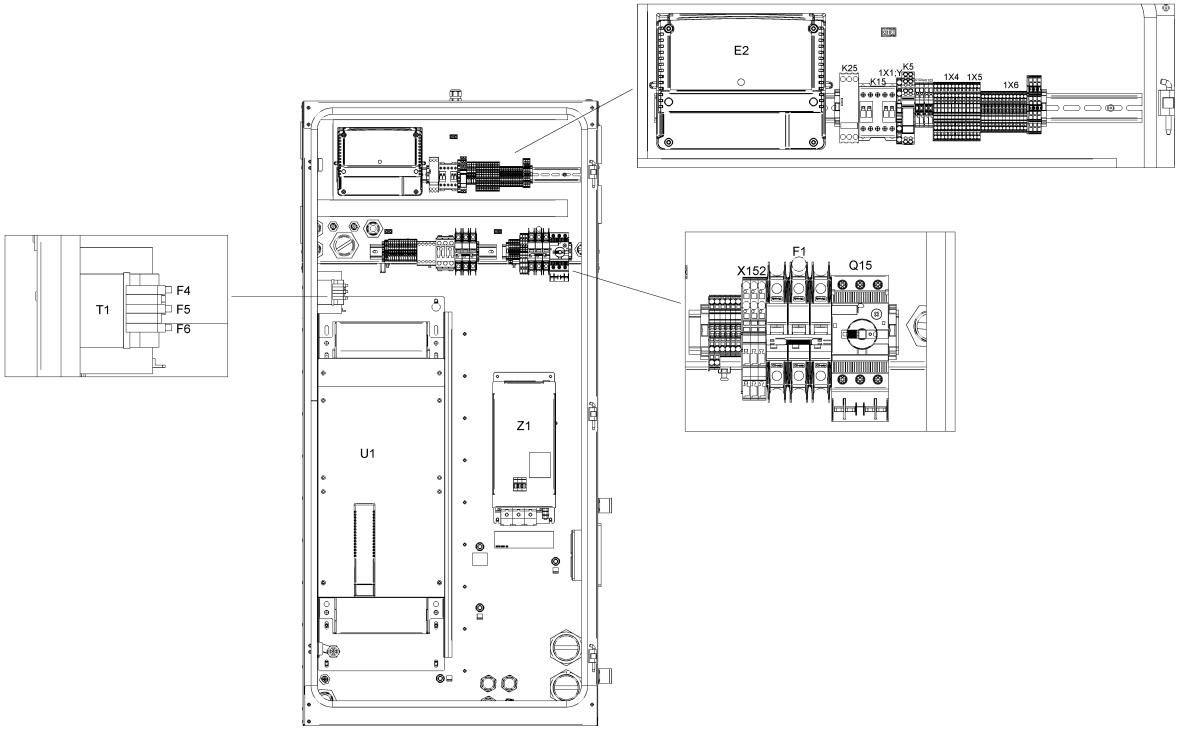
E2
K25
K15
1X1:Y
K5
1X4
1X5
1X6
T1
F4
F5
F6
U1
Z1
X152
F1
Q15

21.9 - Cubicle components GA 75L VSD+ - ((200V-400V-500V/50Hz, 460V/60Hz) - IEC, (230V-460V-575V/60Hz - UL-cUL)) - Full-Feature (12/12/2018 - 27/11/2019)

(((MOVOL:200V , MOVOL:400V , MOVOL:500V) + FREQ:50HZ , FREQ:60HZ + MOVOL:460V) + CAPPRE:IEC , (MOVOL:230V , MOVOL:460V , MOVOL:575V) + CAPPRE:ULCUL + FREQ:60HZ) + IDRY:Y + MODEL:GA75VP_16

Ref	Part Number	Qty	Name	Validity	EL
	1088 0039 40	1	PLATE	**(12/12/2018 - 24/02/2019)** ((((CAPPRM:AS1210 , CAPPRM:CE , CAPPRM:MHLW , CAPPRM:MOM) + MOVOL:400V , (CAPPRM:CE + MOVOL:500V , CAPPRM:MHLW + MOVOL:200V) + COOL:AIR) + FREQ:50HZ , (CAPPRM:ASME , CAPPRM:MHLW) + FREQ:60HZ + MOVOL:460V) + CAPPRE:IEC , ((MOVOL:230V , MOVOL:575V) + COOL:AIR , MOVOL:460V) + CAPPRE:ULCUL + CAPPRM:ASME + FREQ:60HZ) **(25/02/2019 - 24/07/2019)** (((((CAPPRM:AS1210 , CAPPRM:CE , CAPPRM:MHLW , CAPPRM:MOM) + MOVOL:400V , CAPPRM:CE + MOVOL:500V , CAPPRM:MHLW + MOVOL:200V) + FREQ:50HZ , (CAPPRM:ASME , CAPPRM:MHLW) + FREQ:60HZ + MOVOL:460V) + CAPPRE:IEC , (MOVOL:230V , MOVOL:460V , MOVOL:575V) + CAPPRE:ULCUL + CAPPRM:ASME + FREQ:60HZ) + COOL:AIR , CAPPRE:IEC + CAPPRM:MHLW + COOL:WATER + FREQ:60HZ + MOVOL:460V) **(25/07/2019 - 27/11/2019)** ((((CAPPRM:AS1210 , CAPPRM:CE , CAPPRM:MHLW , CAPPRM:MOM) + MOVOL:400V , CAPPRM:CE + MOVOL:500V , CAPPRM:MHLW + MOVOL:200V) + FREQ:50HZ , (CAPPRM:ASME , CAPPRM:MHLW) + FREQ:60HZ + MOVOL:460V) + CAPPRE:IEC , (MOVOL:230V , MOVOL:460V , MOVOL:575V) + CAPPRE:ULCUL + CAPPRM:ASME + FREQ:60HZ) + COOL:AIR	1X11
	1088 0039 34	4	TERMINAL	**(12/12/2018 - 24/02/2019)** ((((CAPPRM:AS1210 , CAPPRM:CE , CAPPRM:MHLW , CAPPRM:MOM) + MOVOL:400V , (CAPPRM:CE + MOVOL:500V , CAPPRM:MHLW + MOVOL:200V) + COOL:AIR) + FREQ:50HZ , (CAPPRM:ASME , CAPPRM:MHLW) + FREQ:60HZ + MOVOL:460V) + CAPPRE:IEC , ((MOVOL:230V , MOVOL:575V) + COOL:AIR , MOVOL:460V) + CAPPRE:ULCUL + CAPPRM:ASME + FREQ:60HZ) **(25/02/2019 - 24/07/2019)** (((((CAPPRM:AS1210 , CAPPRM:CE , CAPPRM:MHLW , CAPPRM:MOM) + MOVOL:400V , CAPPRM:CE + MOVOL:500V , CAPPRM:MHLW + MOVOL:200V) + FREQ:50HZ , (CAPPRM:ASME , CAPPRM:MHLW) + FREQ:60HZ + MOVOL:460V) + CAPPRE:IEC , (MOVOL:230V , MOVOL:460V , MOVOL:575V) + CAPPRE:ULCUL + CAPPRM:ASME + FREQ:60HZ) + COOL:AIR , CAPPRE:IEC + CAPPRM:MHLW + COOL:WATER + FREQ:60HZ + MOVOL:460V) **(25/07/2019 - 27/11/2019)** ((((CAPPRM:AS1210 , CAPPRM:CE , CAPPRM:MHLW , CAPPRM:MOM) + MOVOL:400V , CAPPRM:CE + MOVOL:500V , CAPPRM:MHLW + MOVOL:200V) + FREQ:50HZ , (CAPPRM:ASME , CAPPRM:MHLW) + FREQ:60HZ + MOVOL:460V) + CAPPRE:IEC , (MOVOL:230V , MOVOL:460V , MOVOL:575V) + CAPPRE:ULCUL + CAPPRM:ASME + FREQ:60HZ) + COOL:AIR	
	Electrical legend:	1X11:30,301,34			

Legend:

CAPPRE:IEC - Component approval electrical:IEC
CAPPRE:ULCUL - Component approval electrical:UL/cUL
CAPPRM:AS1210 - Component approval mechanical:AS1210
CAPPRM:ASME - Component approval mechanical:ASME
CAPPRM:CE - Component approval mechanical:CE
CAPPRM:MHLW - Component approval mechanical:MHLW
CAPPRM:MOM - Component approval mechanical:MOM
COOL:AIR - Cooling:Air cooled
COOL:WATER - Cooling:Water cooled
FREQ:50HZ - Frequency:50 Hz
FREQ:60HZ - Frequency:60 Hz
IDRY:Y - Integrated dryer:Yes
MODEL:GA75VP_16 - Model:GA 75VSD+
MOVOL:200V - Supply voltage:200 V
MOVOL:230V - Supply voltage:230 V
MOVOL:400V - Supply voltage:400 V
MOVOL:460V - Supply voltage:460 V
MOVOL:500V - Supply voltage:500 V
MOVOL:575V - Supply voltage:575 V

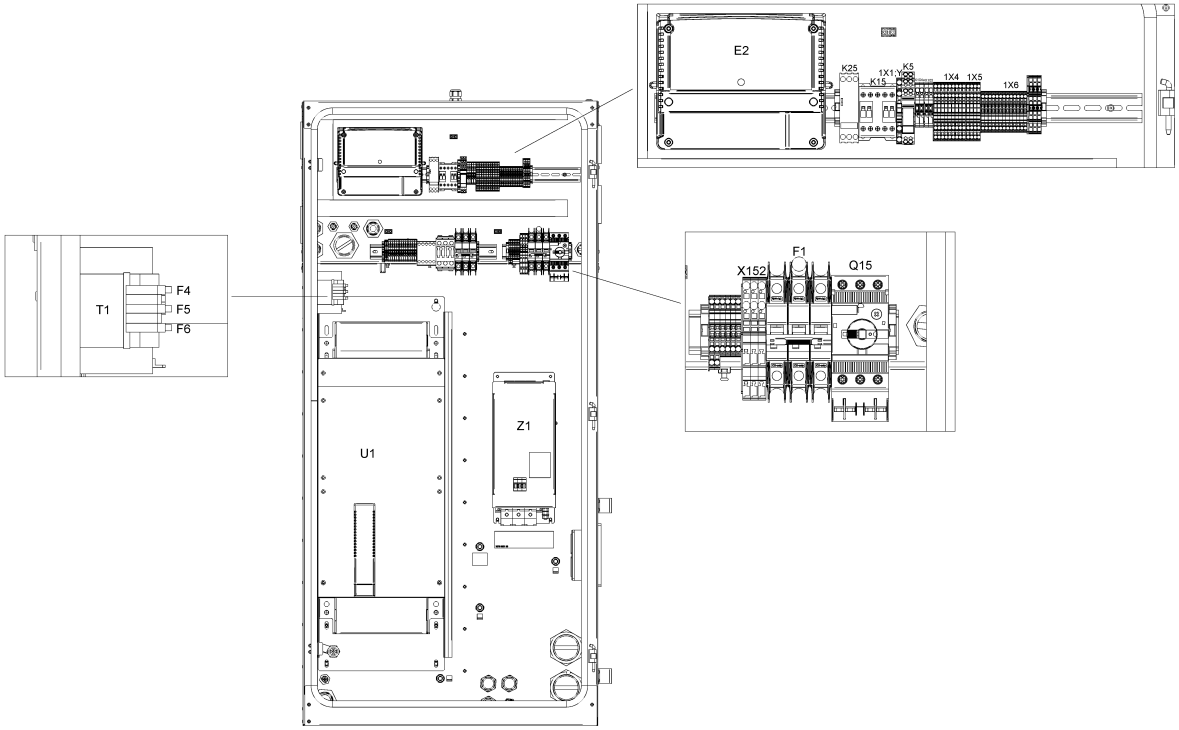
E2
K25
K15
1X1:Y
K5
1X4
1X5
1X6
T1
F4
F5
F6
U1
Z1
X152
F1
Q15

21.9 - Cubicle components GA 75L VSD+ - ((200V-400V-500V/50Hz, 460V/60Hz) - IEC, (230V-460V-575V/60Hz - UL-cUL)) - Full-Feature (12/12/2018 - 27/11/2019)

(((MOVOL:200V , MOVOL:400V , MOVOL:500V) + FREQ:50HZ , FREQ:60HZ + MOVOL:460V) + CAPPRE:IEC , (MOVOL:230V , MOVOL:460V , MOVOL:575V) + CAPPRE:ULCUL + FREQ:60HZ) + IDRY:Y + MODEL:GA75VP_16

Ref	Part Number	Qty	Name	Validity	EL
	1088 0039 35	1	PLATE	**(12/12/2018 - 24/02/2019)** ((((CAPPRM:AS1210 , CAPPRM:CE , CAPPRM:MHLW , CAPPRM:MOM) + MOVOL:400V , (CAPPRM:CE + MOVOL:500V , CAPPRM:MHLW + MOVOL:200V) + COOL:AIR) + FREQ:50HZ , (CAPPRM:ASME , CAPPRM:MHLW) + FREQ:60HZ + MOVOL:460V) + CAPPRE:IEC , ((MOVOL:230V , MOVOL:575V) + COOL:AIR , MOVOL:460V) + CAPPRE:ULCUL + CAPPRM:ASME + FREQ:60HZ) **(25/02/2019 - 24/07/2019)** (((((CAPPRM:AS1210 , CAPPRM:CE , CAPPRM:MHLW , CAPPRM:MOM) + MOVOL:400V , CAPPRM:CE + MOVOL:500V , CAPPRM:MHLW + MOVOL:200V) + FREQ:50HZ , (CAPPRM:ASME , CAPPRM:MHLW) + FREQ:60HZ + MOVOL:460V) + CAPPRE:IEC , (MOVOL:230V , MOVOL:460V , MOVOL:575V) + CAPPRE:ULCUL + CAPPRM:ASME + FREQ:60HZ) + COOL:AIR , CAPPRE:IEC + CAPPRM:MHLW + COOL:WATER + FREQ:60HZ + MOVOL:460V) **(25/07/2019 - 27/11/2019)** ((((CAPPRM:AS1210 , CAPPRM:CE , CAPPRM:MHLW , CAPPRM:MOM) + MOVOL:400V , CAPPRM:CE + MOVOL:500V , CAPPRM:MHLW + MOVOL:200V) + FREQ:50HZ , (CAPPRM:ASME , CAPPRM:MHLW) + FREQ:60HZ + MOVOL:460V) + CAPPRE:IEC , (MOVOL:230V , MOVOL:460V , MOVOL:575V) + CAPPRE:ULCUL + CAPPRM:ASME + FREQ:60HZ) + COOL:AIR	1X11
	1088 0039 04	2	TERMINAL	**(12/12/2018 - 24/02/2019)** ((((CAPPRM:AS1210 , CAPPRM:CE , CAPPRM:MHLW , CAPPRM:MOM) + MOVOL:400V , (CAPPRM:CE + MOVOL:500V , CAPPRM:MHLW + MOVOL:200V) + COOL:AIR) + FREQ:50HZ , (CAPPRM:ASME , CAPPRM:MHLW) + FREQ:60HZ + MOVOL:460V) + CAPPRE:IEC , ((MOVOL:230V , MOVOL:575V) + COOL:AIR , MOVOL:460V) + CAPPRE:ULCUL + CAPPRM:ASME + FREQ:60HZ) **(25/02/2019 - 24/07/2019)** (((((CAPPRM:AS1210 , CAPPRM:CE , CAPPRM:MHLW , CAPPRM:MOM) + MOVOL:400V , CAPPRM:CE + MOVOL:500V , CAPPRM:MHLW + MOVOL:200V) + FREQ:50HZ , (CAPPRM:ASME , CAPPRM:MHLW) + FREQ:60HZ + MOVOL:460V) + CAPPRE:IEC , (MOVOL:230V , MOVOL:460V , MOVOL:575V) + CAPPRE:ULCUL + CAPPRM:ASME + FREQ:60HZ) + COOL:AIR , CAPPRE:IEC + CAPPRM:MHLW + COOL:WATER + FREQ:60HZ + MOVOL:460V) **(25/07/2019 - 27/11/2019)** ((((CAPPRM:AS1210 , CAPPRM:CE , CAPPRM:MHLW , CAPPRM:MOM) + MOVOL:400V , CAPPRM:CE + MOVOL:500V , CAPPRM:MHLW + MOVOL:200V) + FREQ:50HZ , (CAPPRM:ASME , CAPPRM:MHLW) + FREQ:60HZ + MOVOL:460V) + CAPPRE:IEC , (MOVOL:230V , MOVOL:460V , MOVOL:575V) + CAPPRE:ULCUL + CAPPRM:ASME + FREQ:60HZ) + COOL:AIR	X104a

Legend:

CAPPRE:IEC - Component approval electrical:IEC
CAPPRE:ULCUL - Component approval electrical:UL/cUL
CAPPRM:AS1210 - Component approval mechanical:AS1210
CAPPRM:ASME - Component approval mechanical:ASME
CAPPRM:CE - Component approval mechanical:CE
CAPPRM:MHLW - Component approval mechanical:MHLW
CAPPRM:MOM - Component approval mechanical:MOM
COOL:AIR - Cooling:Air cooled
COOL:WATER - Cooling:Water cooled
FREQ:50HZ - Frequency:50 Hz
FREQ:60HZ - Frequency:60 Hz
IDRY:Y - Integrated dryer:Yes
MODEL:GA75VP_16 - Model:GA 75VSD+
MOVOL:200V - Supply voltage:200 V
MOVOL:230V - Supply voltage:230 V
MOVOL:400V - Supply voltage:400 V
MOVOL:460V - Supply voltage:460 V
MOVOL:500V - Supply voltage:500 V
MOVOL:575V - Supply voltage:575 V

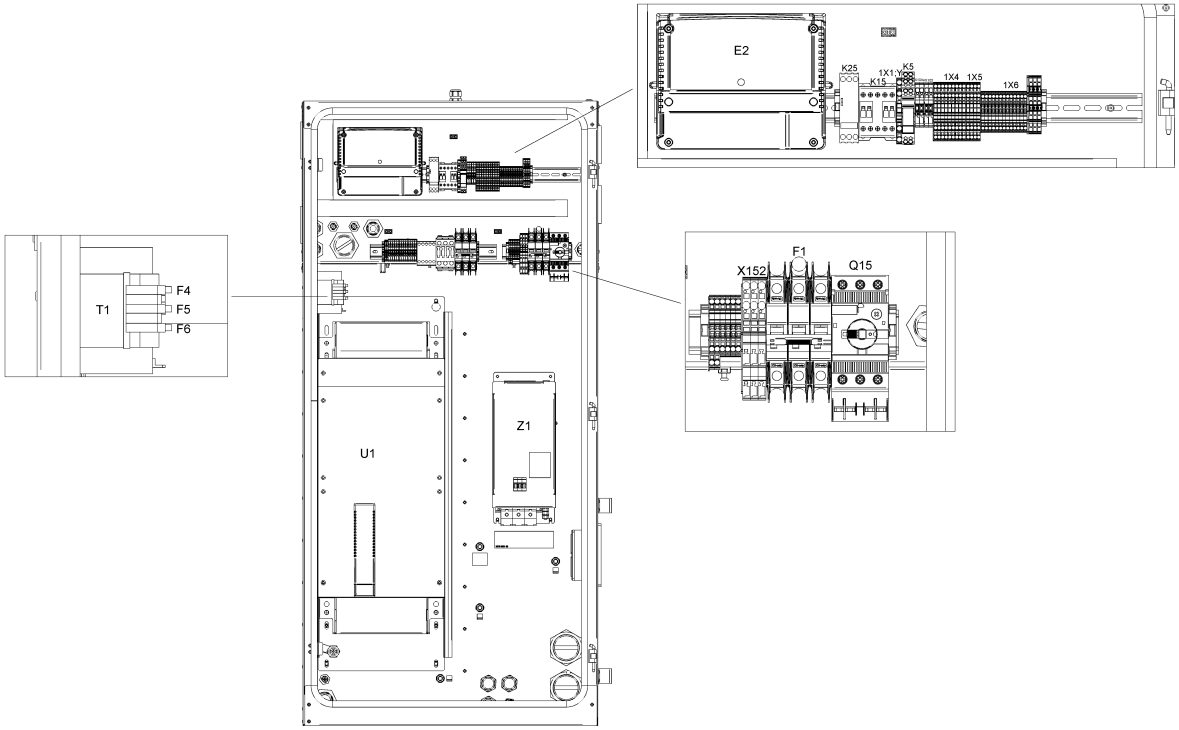
E2
K25
K15
1X1:Y
K5
1X4
1X5
1X6
T1
F4
F5
F6
U1
Z1
X152
F1
Q15

Ref	Part Number	Qty	Name	Validity	EL
	1088 0037 99	2	PIN	**(12/12/2018 - 24/02/2019)** ((((CAPPRM:AS1210 , CAPPRM:CE , CAPPRM:MHLW , CAPPRM:MOM) + MOVOL:400V , (CAPPRM:CE + MOVOL:500V , CAPPRM:MHLW + MOVOL:200V) + COOL:AIR) + FREQ:50HZ , (CAPPRM:ASME , CAPPRM:MHLW) + FREQ:60HZ + MOVOL:460V) + CAPPRE:IEC , ((MOVOL:230V , MOVOL:575V) + COOL:AIR , MOVOL:460V) + CAPPRE:ULCUL + CAPPRM:ASME + FREQ:60HZ) **(25/02/2019 - 24/07/2019)** (((((CAPPRM:AS1210 , CAPPRM:CE , CAPPRM:MHLW , CAPPRM:MOM) + MOVOL:400V , CAPPRM:CE + MOVOL:500V , CAPPRM:MHLW + MOVOL:200V) + FREQ:50HZ , (CAPPRM:ASME , CAPPRM:MHLW) + FREQ:60HZ + MOVOL:460V) + CAPPRE:IEC , (MOVOL:230V , MOVOL:460V , MOVOL:575V) + CAPPRE:ULCUL + CAPPRM:ASME + FREQ:60HZ) + COOL:AIR , CAPPRE:IEC + CAPPRM:MHLW + COOL:WATER + FREQ:60HZ + MOVOL:460V) **(25/07/2019 - 27/11/2019)** ((((CAPPRM:AS1210 , CAPPRM:CE , CAPPRM:MHLW , CAPPRM:MOM) + MOVOL:400V , CAPPRM:CE + MOVOL:500V , CAPPRM:MHLW + MOVOL:200V) + FREQ:50HZ , (CAPPRM:ASME , CAPPRM:MHLW) + FREQ:60HZ + MOVOL:460V) + CAPPRE:IEC , (MOVOL:230V , MOVOL:460V , MOVOL:575V) + CAPPRE:ULCUL + CAPPRM:ASME + FREQ:60HZ) + COOL:AIR	X104a/X105
	1088 0039 02	1	PLATE	**(12/12/2018 - 24/02/2019)** ((((CAPPRM:AS1210 , CAPPRM:CE , CAPPRM:MHLW , CAPPRM:MOM) + MOVOL:400V , (CAPPRM:CE + MOVOL:500V , CAPPRM:MHLW + MOVOL:200V) + COOL:AIR) + FREQ:50HZ , (CAPPRM:ASME , CAPPRM:MHLW) + FREQ:60HZ + MOVOL:460V) + CAPPRE:IEC , ((MOVOL:230V , MOVOL:575V) + COOL:AIR , MOVOL:460V) + CAPPRE:ULCUL + CAPPRM:ASME + FREQ:60HZ) **(25/02/2019 - 24/07/2019)** (((((CAPPRM:AS1210 , CAPPRM:CE , CAPPRM:MHLW , CAPPRM:MOM) + MOVOL:400V , CAPPRM:CE + MOVOL:500V , CAPPRM:MHLW + MOVOL:200V) + FREQ:50HZ , (CAPPRM:ASME , CAPPRM:MHLW) + FREQ:60HZ + MOVOL:460V) + CAPPRE:IEC , (MOVOL:230V , MOVOL:460V , MOVOL:575V) + CAPPRE:ULCUL + CAPPRM:ASME + FREQ:60HZ) + COOL:AIR , CAPPRE:IEC + CAPPRM:MHLW + COOL:WATER + FREQ:60HZ + MOVOL:460V) **(25/07/2019 - 27/11/2019)** ((((CAPPRM:AS1210 , CAPPRM:CE , CAPPRM:MHLW , CAPPRM:MOM) + MOVOL:400V , CAPPRM:CE + MOVOL:500V , CAPPRM:MHLW + MOVOL:200V) + FREQ:50HZ , (CAPPRM:ASME , CAPPRM:MHLW) + FREQ:60HZ + MOVOL:460V) + CAPPRE:IEC , (MOVOL:230V , MOVOL:460V , MOVOL:575V) + CAPPRE:ULCUL + CAPPRM:ASME + FREQ:60HZ) + COOL:AIR	X104a

Legend:

CAPPRE:IEC - Component approval electrical:IEC
CAPPRE:ULCUL - Component approval electrical:UL/cUL
CAPPRM:AS1210 - Component approval mechanical:AS1210
CAPPRM:ASME - Component approval mechanical:ASME
CAPPRM:CE - Component approval mechanical:CE
CAPPRM:MHLW - Component approval mechanical:MHLW
CAPPRM:MOM - Component approval mechanical:MOM
COOL:AIR - Cooling:Air cooled
COOL:WATER - Cooling:Water cooled
FREQ:50HZ - Frequency:50 Hz
FREQ:60HZ - Frequency:60 Hz
IDRY:Y - Integrated dryer:Yes
MODEL:GA75VP_16 - Model:GA 75VSD+
MOVOL:200V - Supply voltage:200 V
MOVOL:230V - Supply voltage:230 V
MOVOL:400V - Supply voltage:400 V
MOVOL:460V - Supply voltage:460 V
MOVOL:500V - Supply voltage:500 V
MOVOL:575V - Supply voltage:575 V

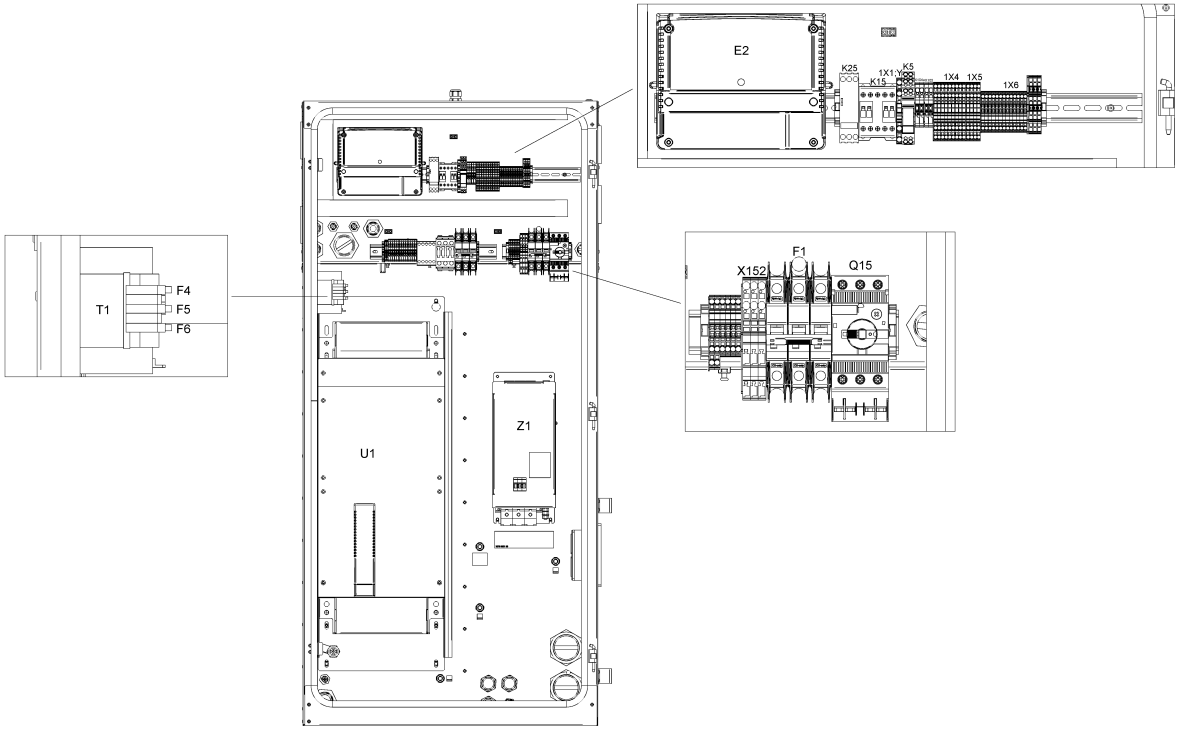
E2
K25
K15
1X1:Y
K5
1X4
1X5
1X6
T1
F4
F5
F6
U1
Z1
X152
F1
Q15

21.9 - Cubicle components GA 75L VSD+ - ((200V-400V-500V/50Hz, 460V/60Hz) - IEC, (230V-460V-575V/60Hz - UL-cUL)) - Full-Feature (12/12/2018 - 27/11/2019)

(((MOVOL:200V , MOVOL:400V , MOVOL:500V) + FREQ:50HZ , FREQ:60HZ + MOVOL:460V) + CAPPRE:IEC , (MOVOL:230V , MOVOL:460V , MOVOL:575V) + CAPPRE:ULCUL + FREQ:60HZ) + IDRY:Y + MODEL:GA75VP_16

Ref	Part Number	Qty	Name	Validity	EL
	1088 0039 07	2	TERMINAL	**(12/12/2018 - 24/02/2019)** ((((CAPPRM:AS1210 , CAPPRM:CE , CAPPRM:MHLW , CAPPRM:MOM) + MOVOL:400V , (CAPPRM:CE + MOVOL:500V , CAPPRM:MHLW + MOVOL:200V) + COOL:AIR) + FREQ:50HZ , (CAPPRM:ASME , CAPPRM:MHLW) + FREQ:60HZ + MOVOL:460V) + CAPPRE:IEC , ((MOVOL:230V , MOVOL:575V) + COOL:AIR , MOVOL:460V) + CAPPRE:ULCUL + CAPPRM:ASME + FREQ:60HZ) **(25/02/2019 - 24/07/2019)** (((((CAPPRM:AS1210 , CAPPRM:CE , CAPPRM:MHLW , CAPPRM:MOM) + MOVOL:400V , CAPPRM:CE + MOVOL:500V , CAPPRM:MHLW + MOVOL:200V) + FREQ:50HZ , (CAPPRM:ASME , CAPPRM:MHLW) + FREQ:60HZ + MOVOL:460V) + CAPPRE:IEC , (MOVOL:230V , MOVOL:460V , MOVOL:575V) + CAPPRE:ULCUL + CAPPRM:ASME + FREQ:60HZ) + COOL:AIR , CAPPRE:IEC + CAPPRM:MHLW + COOL:WATER + FREQ:60HZ + MOVOL:460V) **(25/07/2019 - 27/11/2019)** ((((CAPPRM:AS1210 , CAPPRM:CE , CAPPRM:MHLW , CAPPRM:MOM) + MOVOL:400V , CAPPRM:CE + MOVOL:500V , CAPPRM:MHLW + MOVOL:200V) + FREQ:50HZ , (CAPPRM:ASME , CAPPRM:MHLW) + FREQ:60HZ + MOVOL:460V) + CAPPRE:IEC , (MOVOL:230V , MOVOL:460V , MOVOL:575V) + CAPPRE:ULCUL + CAPPRM:ASME + FREQ:60HZ) + COOL:AIR	X105
	1088 0039 05	1	PLATE	**(12/12/2018 - 24/02/2019)** ((((CAPPRM:AS1210 , CAPPRM:CE , CAPPRM:MHLW , CAPPRM:MOM) + MOVOL:400V , (CAPPRM:CE + MOVOL:500V , CAPPRM:MHLW + MOVOL:200V) + COOL:AIR) + FREQ:50HZ , (CAPPRM:ASME , CAPPRM:MHLW) + FREQ:60HZ + MOVOL:460V) + CAPPRE:IEC , ((MOVOL:230V , MOVOL:575V) + COOL:AIR , MOVOL:460V) + CAPPRE:ULCUL + CAPPRM:ASME + FREQ:60HZ) **(25/02/2019 - 24/07/2019)** (((((CAPPRM:AS1210 , CAPPRM:CE , CAPPRM:MHLW , CAPPRM:MOM) + MOVOL:400V , CAPPRM:CE + MOVOL:500V , CAPPRM:MHLW + MOVOL:200V) + FREQ:50HZ , (CAPPRM:ASME , CAPPRM:MHLW) + FREQ:60HZ + MOVOL:460V) + CAPPRE:IEC , (MOVOL:230V , MOVOL:460V , MOVOL:575V) + CAPPRE:ULCUL + CAPPRM:ASME + FREQ:60HZ) + COOL:AIR , CAPPRE:IEC + CAPPRM:MHLW + COOL:WATER + FREQ:60HZ + MOVOL:460V) **(25/07/2019 - 27/11/2019)** ((((CAPPRM:AS1210 , CAPPRM:CE , CAPPRM:MHLW , CAPPRM:MOM) + MOVOL:400V , CAPPRM:CE + MOVOL:500V , CAPPRM:MHLW + MOVOL:200V) + FREQ:50HZ , (CAPPRM:ASME , CAPPRM:MHLW) + FREQ:60HZ + MOVOL:460V) + CAPPRE:IEC , (MOVOL:230V , MOVOL:460V , MOVOL:575V) + CAPPRE:ULCUL + CAPPRM:ASME + FREQ:60HZ) + COOL:AIR	X105

Legend:

CAPPRE:IEC - Component approval electrical:IEC
CAPPRE:ULCUL - Component approval electrical:UL/cUL
CAPPRM:AS1210 - Component approval mechanical:AS1210
CAPPRM:ASME - Component approval mechanical:ASME
CAPPRM:CE - Component approval mechanical:CE
CAPPRM:MHLW - Component approval mechanical:MHLW
CAPPRM:MOM - Component approval mechanical:MOM
COOL:AIR - Cooling:Air cooled
COOL:WATER - Cooling:Water cooled
FREQ:50HZ - Frequency:50 Hz
FREQ:60HZ - Frequency:60 Hz
IDRY:Y - Integrated dryer:Yes
MODEL:GA75VP_16 - Model:GA 75VSD+
MOVOL:200V - Supply voltage:200 V
MOVOL:230V - Supply voltage:230 V
MOVOL:400V - Supply voltage:400 V
MOVOL:460V - Supply voltage:460 V
MOVOL:500V - Supply voltage:500 V
MOVOL:575V - Supply voltage:575 V

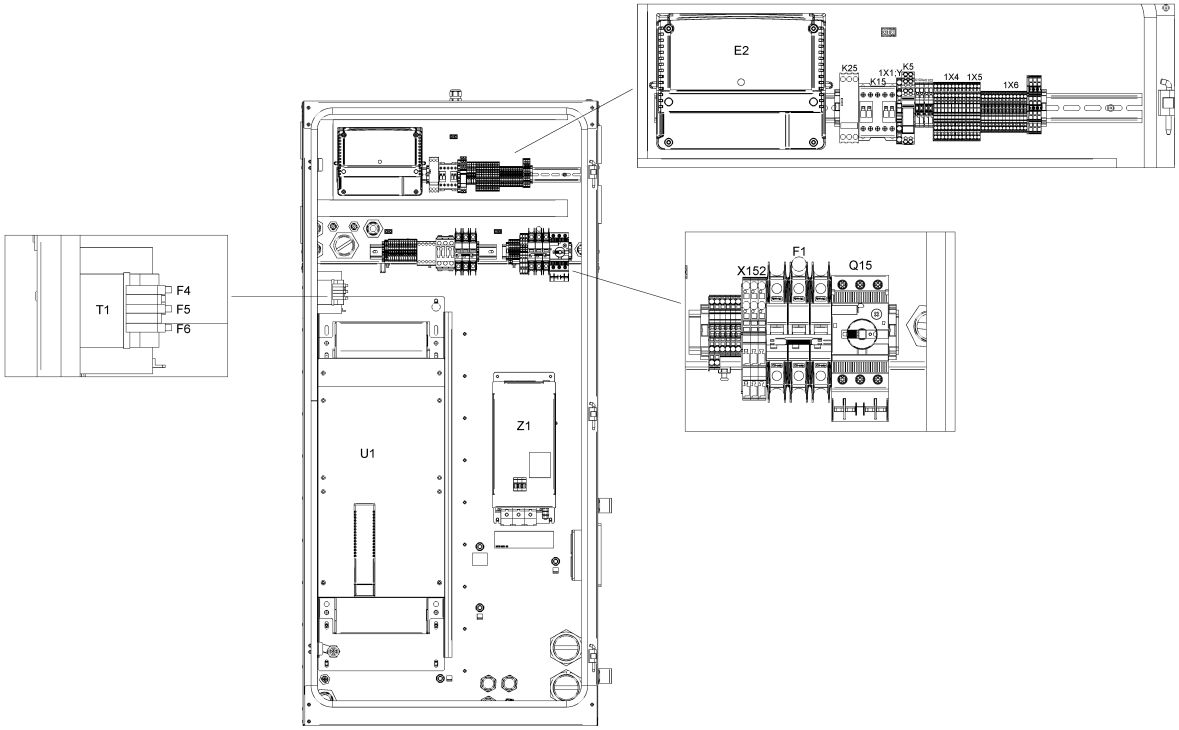
E2
K25
K15
1X1:Y
K5
1X4
1X5
1X6
T1
F4
F5
F6
U1
Z1
X152
F1
Q15

21.9 - Cubicle components GA 75L VSD+ - ((200V-400V-500V/50Hz, 460V/60Hz) - IEC, (230V-460V-575V/60Hz - UL-cUL)) - Full-Feature (12/12/2018 - 27/11/2019)

(((MOVOL:200V , MOVOL:400V , MOVOL:500V) + FREQ:50HZ , FREQ:60HZ + MOVOL:460V) + CAPPRE:IEC , (MOVOL:230V , MOVOL:460V , MOVOL:575V) + CAPPRE:ULCUL + FREQ:60HZ) + IDRY:Y + MODEL:GA75VP_16

Ref	Part Number	Qty	Name	Validity	EL
	1088 0039 34	13	TERMINAL	**(12/12/2018 - 24/02/2019)** ((((CAPPRM:AS1210 , CAPPRM:CE , CAPPRM:MHLW , CAPPRM:MOM) + MOVOL:400V , (CAPPRM:CE + MOVOL:500V , CAPPRM:MHLW + MOVOL:200V) + COOL:AIR) + FREQ:50HZ , (CAPPRM:ASME , CAPPRM:MHLW) + FREQ:60HZ + MOVOL:460V) + CAPPRE:IEC , ((MOVOL:230V , MOVOL:575V) + COOL:AIR , MOVOL:460V) + CAPPRE:ULCUL + CAPPRM:ASME + FREQ:60HZ) **(25/02/2019 - 24/07/2019)** (((((CAPPRM:AS1210 , CAPPRM:CE , CAPPRM:MHLW , CAPPRM:MOM) + MOVOL:400V , CAPPRM:CE + MOVOL:500V , CAPPRM:MHLW + MOVOL:200V) + FREQ:50HZ , (CAPPRM:ASME , CAPPRM:MHLW) + FREQ:60HZ + MOVOL:460V) + CAPPRE:IEC , (MOVOL:230V , MOVOL:460V , MOVOL:575V) + CAPPRE:ULCUL + CAPPRM:ASME + FREQ:60HZ) + COOL:AIR , CAPPRE:IEC + CAPPRM:MHLW + COOL:WATER + FREQ:60HZ + MOVOL:460V) **(25/07/2019 - 27/11/2019)** ((((CAPPRM:AS1210 , CAPPRM:CE , CAPPRM:MHLW , CAPPRM:MOM) + MOVOL:400V , CAPPRM:CE + MOVOL:500V , CAPPRM:MHLW + MOVOL:200V) + FREQ:50HZ , (CAPPRM:ASME , CAPPRM:MHLW) + FREQ:60HZ + MOVOL:460V) + CAPPRE:IEC , (MOVOL:230V , MOVOL:460V , MOVOL:575V) + CAPPRE:ULCUL + CAPPRM:ASME + FREQ:60HZ) + COOL:AIR	1X6
	1088 0037 69	3	CONNECTOR	**(12/12/2018 - 24/02/2019)** ((((CAPPRM:AS1210 , CAPPRM:CE , CAPPRM:MHLW , CAPPRM:MOM) + MOVOL:400V , (CAPPRM:CE + MOVOL:500V , CAPPRM:MHLW + MOVOL:200V) + COOL:AIR) + FREQ:50HZ , (CAPPRM:ASME , CAPPRM:MHLW) + FREQ:60HZ + MOVOL:460V) + CAPPRE:IEC , ((MOVOL:230V , MOVOL:575V) + COOL:AIR , MOVOL:460V) + CAPPRE:ULCUL + CAPPRM:ASME + FREQ:60HZ) **(25/02/2019 - 24/07/2019)** (((((CAPPRM:AS1210 , CAPPRM:CE , CAPPRM:MHLW , CAPPRM:MOM) + MOVOL:400V , CAPPRM:CE + MOVOL:500V , CAPPRM:MHLW + MOVOL:200V) + FREQ:50HZ , (CAPPRM:ASME , CAPPRM:MHLW) + FREQ:60HZ + MOVOL:460V) + CAPPRE:IEC , (MOVOL:230V , MOVOL:460V , MOVOL:575V) + CAPPRE:ULCUL + CAPPRM:ASME + FREQ:60HZ) + COOL:AIR , CAPPRE:IEC + CAPPRM:MHLW + COOL:WATER + FREQ:60HZ + MOVOL:460V) **(25/07/2019 - 27/11/2019)** ((((CAPPRM:AS1210 , CAPPRM:CE , CAPPRM:MHLW , CAPPRM:MOM) + MOVOL:400V , CAPPRM:CE + MOVOL:500V , CAPPRM:MHLW + MOVOL:200V) + FREQ:50HZ , (CAPPRM:ASME , CAPPRM:MHLW) + FREQ:60HZ + MOVOL:460V) + CAPPRE:IEC , (MOVOL:230V , MOVOL:460V , MOVOL:575V) + CAPPRE:ULCUL + CAPPRM:ASME + FREQ:60HZ) + COOL:AIR	1X7

Legend:

CAPPRE:IEC - Component approval electrical:IEC
CAPPRE:ULCUL - Component approval electrical:UL/cUL
CAPPRM:AS1210 - Component approval mechanical:AS1210
CAPPRM:ASME - Component approval mechanical:ASME
CAPPRM:CE - Component approval mechanical:CE
CAPPRM:MHLW - Component approval mechanical:MHLW
CAPPRM:MOM - Component approval mechanical:MOM
COOL:AIR - Cooling:Air cooled
COOL:WATER - Cooling:Water cooled
FREQ:50HZ - Frequency:50 Hz
FREQ:60HZ - Frequency:60 Hz
IDRY:Y - Integrated dryer:Yes
MODEL:GA75VP_16 - Model:GA 75VSD+
MOVOL:200V - Supply voltage:200 V
MOVOL:230V - Supply voltage:230 V
MOVOL:400V - Supply voltage:400 V
MOVOL:460V - Supply voltage:460 V
MOVOL:500V - Supply voltage:500 V
MOVOL:575V - Supply voltage:575 V

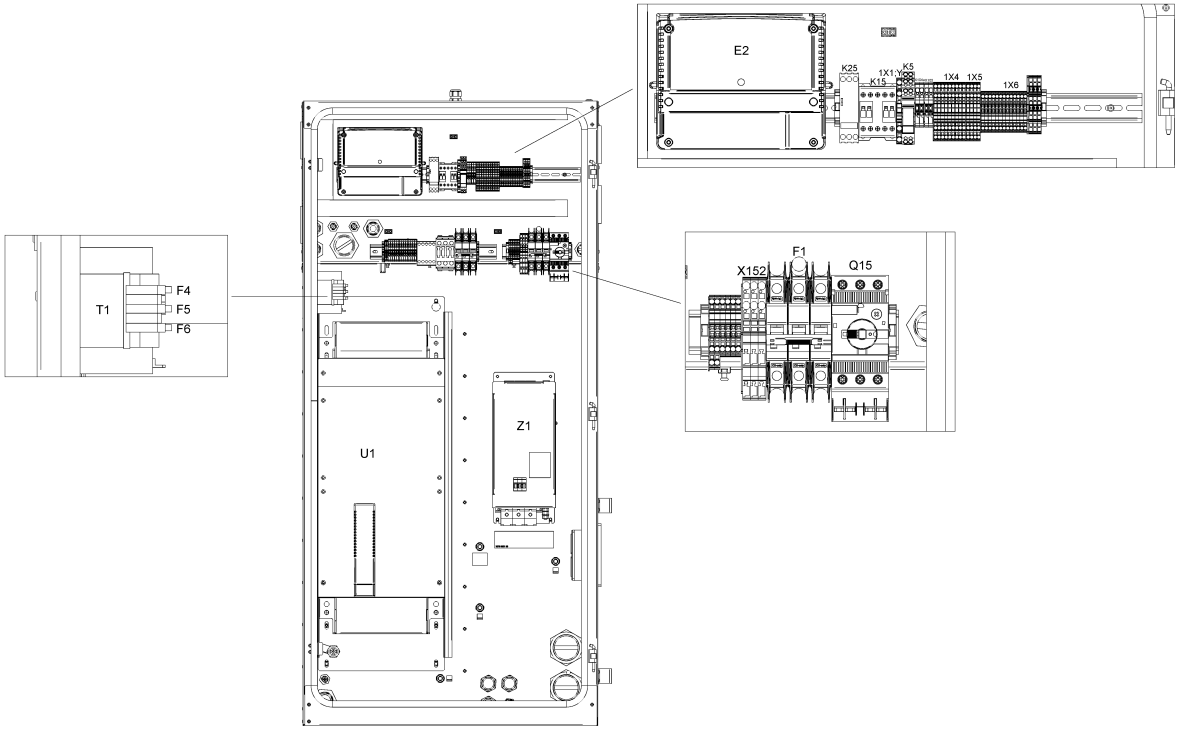
E2
K25
K15
1X1:Y
K5
1X4
1X5
1X6
T1
F4
F5
F6
U1
Z1
X152
F1
Q15

21.9 - Cubicle components GA 75L VSD+ - ((200V-400V-500V/50Hz, 460V/60Hz) - IEC, (230V-460V-575V/60Hz - UL-cUL)) - Full-Feature (12/12/2018 - 27/11/2019)

(((MOVOL:200V , MOVOL:400V , MOVOL:500V) + FREQ:50HZ , FREQ:60HZ + MOVOL:460V) + CAPPRE:IEC , (MOVOL:230V , MOVOL:460V , MOVOL:575V) + CAPPRE:ULCUL + FREQ:60HZ) + IDRY:Y + MODEL:GA75VP_16

Ref	Part Number	Qty	Name	Validity	EL
	1088 0039 35	1	PLATE	**(12/12/2018 - 24/02/2019)** ((((CAPPRM:AS1210 , CAPPRM:CE , CAPPRM:MHLW , CAPPRM:MOM) + MOVOL:400V , (CAPPRM:CE + MOVOL:500V , CAPPRM:MHLW + MOVOL:200V) + COOL:AIR) + FREQ:50HZ , (CAPPRM:ASME , CAPPRM:MHLW) + FREQ:60HZ + MOVOL:460V) + CAPPRE:IEC , ((MOVOL:230V , MOVOL:575V) + COOL:AIR , MOVOL:460V) + CAPPRE:ULCUL + CAPPRM:ASME + FREQ:60HZ) **(25/02/2019 - 24/07/2019)** (((((CAPPRM:AS1210 , CAPPRM:CE , CAPPRM:MHLW , CAPPRM:MOM) + MOVOL:400V , CAPPRM:CE + MOVOL:500V , CAPPRM:MHLW + MOVOL:200V) + FREQ:50HZ , (CAPPRM:ASME , CAPPRM:MHLW) + FREQ:60HZ + MOVOL:460V) + CAPPRE:IEC , (MOVOL:230V , MOVOL:460V , MOVOL:575V) + CAPPRE:ULCUL + CAPPRM:ASME + FREQ:60HZ) + COOL:AIR , CAPPRE:IEC + CAPPRM:MHLW + COOL:WATER + FREQ:60HZ + MOVOL:460V) **(25/07/2019 - 27/11/2019)** ((((CAPPRM:AS1210 , CAPPRM:CE , CAPPRM:MHLW , CAPPRM:MOM) + MOVOL:400V , CAPPRM:CE + MOVOL:500V , CAPPRM:MHLW + MOVOL:200V) + FREQ:50HZ , (CAPPRM:ASME , CAPPRM:MHLW) + FREQ:60HZ + MOVOL:460V) + CAPPRE:IEC , (MOVOL:230V , MOVOL:460V , MOVOL:575V) + CAPPRE:ULCUL + CAPPRM:ASME + FREQ:60HZ) + COOL:AIR	1X6
	1088 0040 37	1	END PLATE	**(12/12/2018 - 24/02/2019)** ((((CAPPRM:AS1210 , CAPPRM:CE , CAPPRM:MHLW , CAPPRM:MOM) + MOVOL:400V , (CAPPRM:CE + MOVOL:500V , CAPPRM:MHLW + MOVOL:200V) + COOL:AIR) + FREQ:50HZ , (CAPPRM:ASME , CAPPRM:MHLW) + FREQ:60HZ + MOVOL:460V) + CAPPRE:IEC , ((MOVOL:230V , MOVOL:575V) + COOL:AIR , MOVOL:460V) + CAPPRE:ULCUL + CAPPRM:ASME + FREQ:60HZ) **(25/02/2019 - 24/07/2019)** (((((CAPPRM:AS1210 , CAPPRM:CE , CAPPRM:MHLW , CAPPRM:MOM) + MOVOL:400V , CAPPRM:CE + MOVOL:500V , CAPPRM:MHLW + MOVOL:200V) + FREQ:50HZ , (CAPPRM:ASME , CAPPRM:MHLW) + FREQ:60HZ + MOVOL:460V) + CAPPRE:IEC , (MOVOL:230V , MOVOL:460V , MOVOL:575V) + CAPPRE:ULCUL + CAPPRM:ASME + FREQ:60HZ) + COOL:AIR , CAPPRE:IEC + CAPPRM:MHLW + COOL:WATER + FREQ:60HZ + MOVOL:460V) **(25/07/2019 - 27/11/2019)** ((((CAPPRM:AS1210 , CAPPRM:CE , CAPPRM:MHLW , CAPPRM:MOM) + MOVOL:400V , CAPPRM:CE + MOVOL:500V , CAPPRM:MHLW + MOVOL:200V) + FREQ:50HZ , (CAPPRM:ASME , CAPPRM:MHLW) + FREQ:60HZ + MOVOL:460V) + CAPPRE:IEC , (MOVOL:230V , MOVOL:460V , MOVOL:575V) + CAPPRE:ULCUL + CAPPRM:ASME + FREQ:60HZ) + COOL:AIR	1X7

Legend:

CAPPRE:IEC - Component approval electrical:IEC
CAPPRE:ULCUL - Component approval electrical:UL/cUL
CAPPRM:AS1210 - Component approval mechanical:AS1210
CAPPRM:ASME - Component approval mechanical:ASME
CAPPRM:CE - Component approval mechanical:CE
CAPPRM:MHLW - Component approval mechanical:MHLW
CAPPRM:MOM - Component approval mechanical:MOM
COOL:AIR - Cooling:Air cooled
COOL:WATER - Cooling:Water cooled
FREQ:50HZ - Frequency:50 Hz
FREQ:60HZ - Frequency:60 Hz
IDRY:Y - Integrated dryer:Yes
MODEL:GA75VP_16 - Model:GA 75VSD+
MOVOL:200V - Supply voltage:200 V
MOVOL:230V - Supply voltage:230 V
MOVOL:400V - Supply voltage:400 V
MOVOL:460V - Supply voltage:460 V
MOVOL:500V - Supply voltage:500 V
MOVOL:575V - Supply voltage:575 V

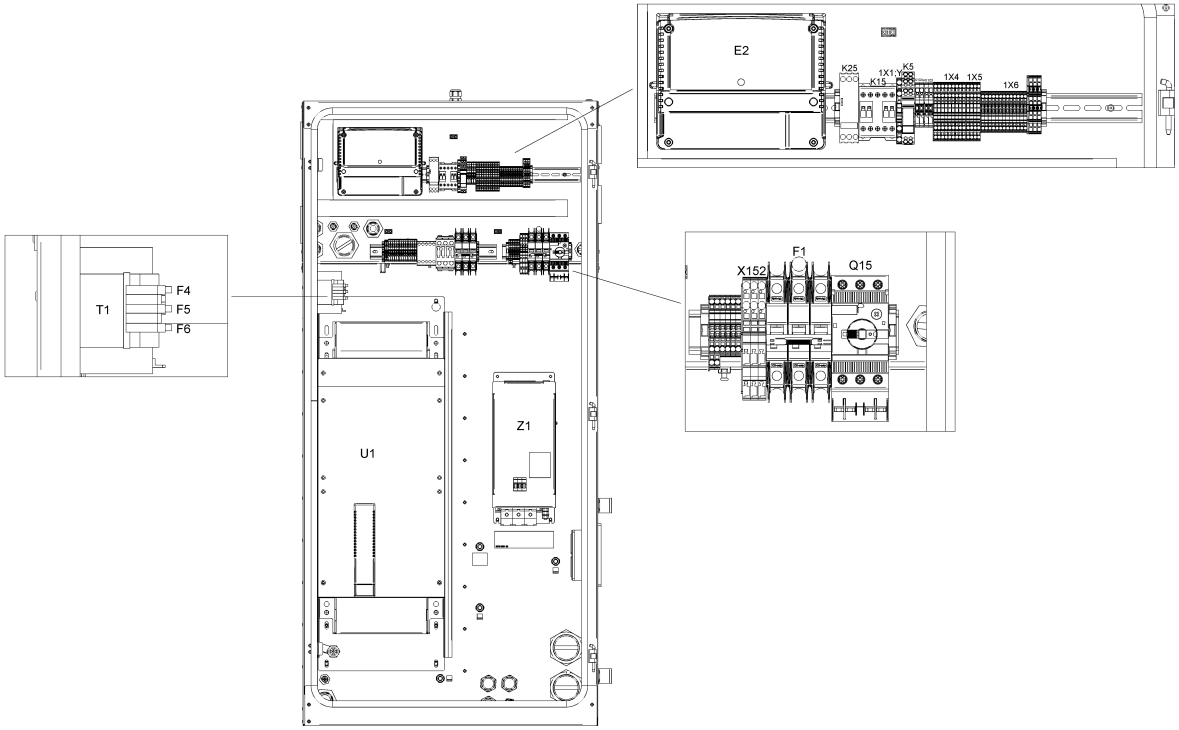
E2
K25
K15
1X1:Y
K5
1X4
1X5
1X6
T1
F4
F5
F6
U1
Z1
X152
F1
Q15

21.9 - Cubicle components GA 75L VSD+ - ((200V-400V-500V/50Hz, 460V/60Hz) - IEC, (230V-460V-575V/60Hz - UL-cUL)) - Full-Feature (12/12/2018 - 27/11/2019)

(((MOVOL:200V , MOVOL:400V , MOVOL:500V) + FREQ:50HZ , FREQ:60HZ + MOVOL:460V) + CAPPRE:IEC , (MOVOL:230V , MOVOL:460V , MOVOL:575V) + CAPPRE:ULCUL + FREQ:60HZ) + IDRY:Y + MODEL:GA75VP_16

Ref	Part Number	Qty	Name	Validity	EL
	1088 0039 36	9	TERMINAL	**(12/12/2018 - 24/02/2019)** ((((CAPPRM:AS1210 , CAPPRM:CE , CAPPRM:MHLW , CAPPRM:MOM) + MOVOL:400V , (CAPPRM:CE + MOVOL:500V , CAPPRM:MHLW + MOVOL:200V) + COOL:AIR) + FREQ:50HZ , (CAPPRM:ASME , CAPPRM:MHLW) + FREQ:60HZ + MOVOL:460V) + CAPPRE:IEC , ((MOVOL:230V , MOVOL:575V) + COOL:AIR , MOVOL:460V) + CAPPRE:ULCUL + CAPPRM:ASME + FREQ:60HZ) **(25/02/2019 - 24/07/2019)** (((((CAPPRM:AS1210 , CAPPRM:CE , CAPPRM:MHLW , CAPPRM:MOM) + MOVOL:400V , CAPPRM:CE + MOVOL:500V , CAPPRM:MHLW + MOVOL:200V) + FREQ:50HZ , (CAPPRM:ASME , CAPPRM:MHLW) + FREQ:60HZ + MOVOL:460V) + CAPPRE:IEC , (MOVOL:230V , MOVOL:460V , MOVOL:575V) + CAPPRE:ULCUL + CAPPRM:ASME + FREQ:60HZ) + COOL:AIR , CAPPRE:IEC + CAPPRM:MHLW + COOL:WATER + FREQ:60HZ + MOVOL:460V) **(25/07/2019 - 27/11/2019)** ((((CAPPRM:AS1210 , CAPPRM:CE , CAPPRM:MHLW , CAPPRM:MOM) + MOVOL:400V , CAPPRM:CE + MOVOL:500V , CAPPRM:MHLW + MOVOL:200V) + FREQ:50HZ , (CAPPRM:ASME , CAPPRM:MHLW) + FREQ:60HZ + MOVOL:460V) + CAPPRE:IEC , (MOVOL:230V , MOVOL:460V , MOVOL:575V) + CAPPRE:ULCUL + CAPPRM:ASME + FREQ:60HZ) + COOL:AIR	1X4
	1088 0039 36	4	TERMINAL	**(12/12/2018 - 24/02/2019)** ((((CAPPRM:AS1210 , CAPPRM:CE , CAPPRM:MHLW , CAPPRM:MOM) + MOVOL:400V , (CAPPRM:CE + MOVOL:500V , CAPPRM:MHLW + MOVOL:200V) + COOL:AIR) + FREQ:50HZ , (CAPPRM:ASME , CAPPRM:MHLW) + FREQ:60HZ + MOVOL:460V) + CAPPRE:IEC , ((MOVOL:230V , MOVOL:575V) + COOL:AIR , MOVOL:460V) + CAPPRE:ULCUL + CAPPRM:ASME + FREQ:60HZ) **(25/02/2019 - 24/07/2019)** (((((CAPPRM:AS1210 , CAPPRM:CE , CAPPRM:MHLW , CAPPRM:MOM) + MOVOL:400V , CAPPRM:CE + MOVOL:500V , CAPPRM:MHLW + MOVOL:200V) + FREQ:50HZ , (CAPPRM:ASME , CAPPRM:MHLW) + FREQ:60HZ + MOVOL:460V) + CAPPRE:IEC , (MOVOL:230V , MOVOL:460V , MOVOL:575V) + CAPPRE:ULCUL + CAPPRM:ASME + FREQ:60HZ) + COOL:AIR , CAPPRE:IEC + CAPPRM:MHLW + COOL:WATER + FREQ:60HZ + MOVOL:460V) **(25/07/2019 - 27/11/2019)** ((((CAPPRM:AS1210 , CAPPRM:CE , CAPPRM:MHLW , CAPPRM:MOM) + MOVOL:400V , CAPPRM:CE + MOVOL:500V , CAPPRM:MHLW + MOVOL:200V) + FREQ:50HZ , (CAPPRM:ASME , CAPPRM:MHLW) + FREQ:60HZ + MOVOL:460V) + CAPPRE:IEC , (MOVOL:230V , MOVOL:460V , MOVOL:575V) + CAPPRE:ULCUL + CAPPRM:ASME + FREQ:60HZ) + COOL:AIR	1X6

Legend:

CAPPRE:IEC - Component approval electrical:IEC
CAPPRE:ULCUL - Component approval electrical:UL/cUL
CAPPRM:AS1210 - Component approval mechanical:AS1210
CAPPRM:ASME - Component approval mechanical:ASME
CAPPRM:CE - Component approval mechanical:CE
CAPPRM:MHLW - Component approval mechanical:MHLW
CAPPRM:MOM - Component approval mechanical:MOM
COOL:AIR - Cooling:Air cooled
COOL:WATER - Cooling:Water cooled
FREQ:50HZ - Frequency:50 Hz
FREQ:60HZ - Frequency:60 Hz
IDRY:Y - Integrated dryer:Yes
MODEL:GA75VP_16 - Model:GA 75VSD+
MOVOL:200V - Supply voltage:200 V
MOVOL:230V - Supply voltage:230 V
MOVOL:400V - Supply voltage:400 V
MOVOL:460V - Supply voltage:460 V
MOVOL:500V - Supply voltage:500 V
MOVOL:575V - Supply voltage:575 V

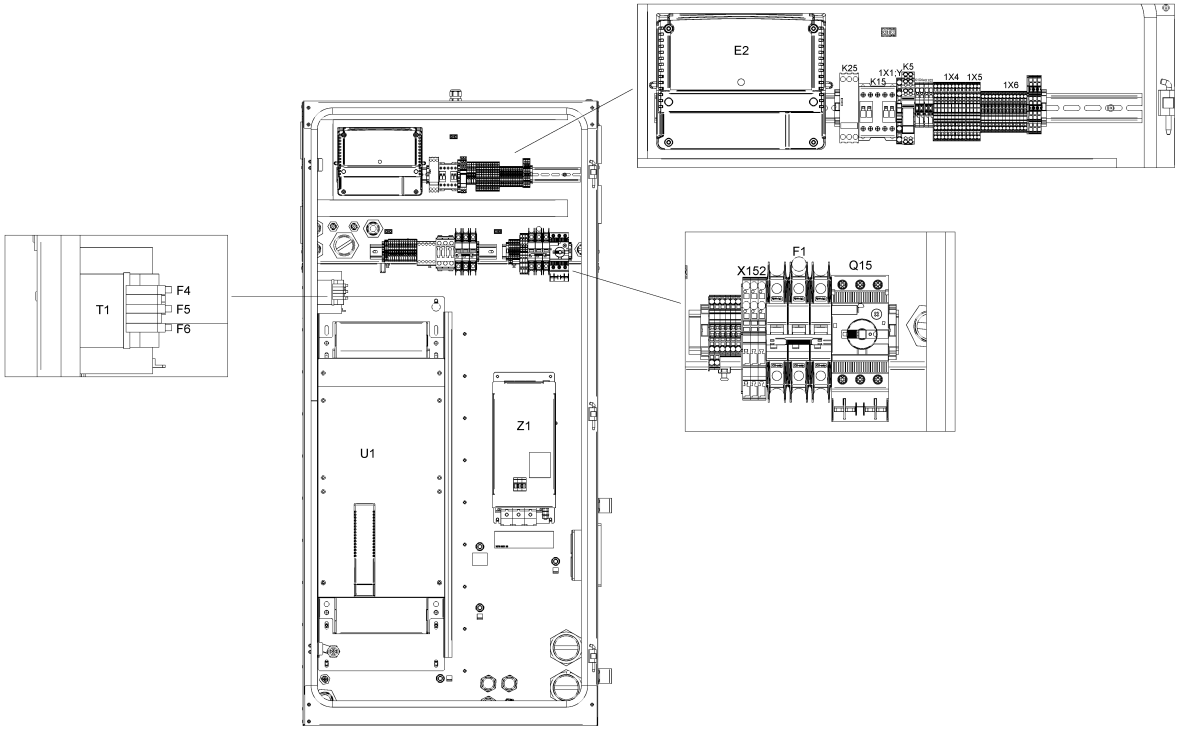
E2
K25
K15
1X1:Y
K5
1X4
1X5
1X6
T1
F4
F5
F6
U1
Z1
X152
F1
Q15

21.9 - Cubicle components GA 75L VSD+ - ((200V-400V-500V/50Hz, 460V/60Hz) - IEC, (230V-460V-575V/60Hz - UL-cUL)) - Full-Feature (12/12/2018 - 27/11/2019)

(((MOVOL:200V , MOVOL:400V , MOVOL:500V) + FREQ:50HZ , FREQ:60HZ + MOVOL:460V) + CAPPRE:IEC , (MOVOL:230V , MOVOL:460V , MOVOL:575V) + CAPPRE:ULCUL + FREQ:60HZ) + IDRY:Y + MODEL:GA75VP_16

Ref	Part Number	Qty	Name	Validity	EL
	1088 0039 37	1	END PLATE	**(12/12/2018 - 24/02/2019)** ((((CAPPRM:AS1210 , CAPPRM:CE , CAPPRM:MHLW , CAPPRM:MOM) + MOVOL:400V , (CAPPRM:CE + MOVOL:500V , CAPPRM:MHLW + MOVOL:200V) + COOL:AIR) + FREQ:50HZ , (CAPPRM:ASME , CAPPRM:MHLW) + FREQ:60HZ + MOVOL:460V) + CAPPRE:IEC , ((MOVOL:230V , MOVOL:575V) + COOL:AIR , MOVOL:460V) + CAPPRE:ULCUL + CAPPRM:ASME + FREQ:60HZ) **(25/02/2019 - 24/07/2019)** (((((CAPPRM:AS1210 , CAPPRM:CE , CAPPRM:MHLW , CAPPRM:MOM) + MOVOL:400V , CAPPRM:CE + MOVOL:500V , CAPPRM:MHLW + MOVOL:200V) + FREQ:50HZ , (CAPPRM:ASME , CAPPRM:MHLW) + FREQ:60HZ + MOVOL:460V) + CAPPRE:IEC , (MOVOL:230V , MOVOL:460V , MOVOL:575V) + CAPPRE:ULCUL + CAPPRM:ASME + FREQ:60HZ) + COOL:AIR , CAPPRE:IEC + CAPPRM:MHLW + COOL:WATER + FREQ:60HZ + MOVOL:460V) **(25/07/2019 - 27/11/2019)** ((((CAPPRM:AS1210 , CAPPRM:CE , CAPPRM:MHLW , CAPPRM:MOM) + MOVOL:400V , CAPPRM:CE + MOVOL:500V , CAPPRM:MHLW + MOVOL:200V) + FREQ:50HZ , (CAPPRM:ASME , CAPPRM:MHLW) + FREQ:60HZ + MOVOL:460V) + CAPPRE:IEC , (MOVOL:230V , MOVOL:460V , MOVOL:575V) + CAPPRE:ULCUL + CAPPRM:ASME + FREQ:60HZ) + COOL:AIR	1X4
	1088 0039 37	1	END PLATE	**(12/12/2018 - 24/02/2019)** ((((CAPPRM:AS1210 , CAPPRM:CE , CAPPRM:MHLW , CAPPRM:MOM) + MOVOL:400V , (CAPPRM:CE + MOVOL:500V , CAPPRM:MHLW + MOVOL:200V) + COOL:AIR) + FREQ:50HZ , (CAPPRM:ASME , CAPPRM:MHLW) + FREQ:60HZ + MOVOL:460V) + CAPPRE:IEC , ((MOVOL:230V , MOVOL:575V) + COOL:AIR , MOVOL:460V) + CAPPRE:ULCUL + CAPPRM:ASME + FREQ:60HZ) **(25/02/2019 - 24/07/2019)** (((((CAPPRM:AS1210 , CAPPRM:CE , CAPPRM:MHLW , CAPPRM:MOM) + MOVOL:400V , CAPPRM:CE + MOVOL:500V , CAPPRM:MHLW + MOVOL:200V) + FREQ:50HZ , (CAPPRM:ASME , CAPPRM:MHLW) + FREQ:60HZ + MOVOL:460V) + CAPPRE:IEC , (MOVOL:230V , MOVOL:460V , MOVOL:575V) + CAPPRE:ULCUL + CAPPRM:ASME + FREQ:60HZ) + COOL:AIR , CAPPRE:IEC + CAPPRM:MHLW + COOL:WATER + FREQ:60HZ + MOVOL:460V) **(25/07/2019 - 27/11/2019)** ((((CAPPRM:AS1210 , CAPPRM:CE , CAPPRM:MHLW , CAPPRM:MOM) + MOVOL:400V , CAPPRM:CE + MOVOL:500V , CAPPRM:MHLW + MOVOL:200V) + FREQ:50HZ , (CAPPRM:ASME , CAPPRM:MHLW) + FREQ:60HZ + MOVOL:460V) + CAPPRE:IEC , (MOVOL:230V , MOVOL:460V , MOVOL:575V) + CAPPRE:ULCUL + CAPPRM:ASME + FREQ:60HZ) + COOL:AIR	1X6

Legend:

CAPPRE:IEC - Component approval electrical:IEC
CAPPRE:ULCUL - Component approval electrical:UL/cUL
CAPPRM:AS1210 - Component approval mechanical:AS1210
CAPPRM:ASME - Component approval mechanical:ASME
CAPPRM:CE - Component approval mechanical:CE
CAPPRM:MHLW - Component approval mechanical:MHLW
CAPPRM:MOM - Component approval mechanical:MOM
COOL:AIR - Cooling:Air cooled
COOL:WATER - Cooling:Water cooled
FREQ:50HZ - Frequency:50 Hz
FREQ:60HZ - Frequency:60 Hz
IDRY:Y - Integrated dryer:Yes
MODEL:GA75VP_16 - Model:GA 75VSD+
MOVOL:200V - Supply voltage:200 V
MOVOL:230V - Supply voltage:230 V
MOVOL:400V - Supply voltage:400 V
MOVOL:460V - Supply voltage:460 V
MOVOL:500V - Supply voltage:500 V
MOVOL:575V - Supply voltage:575 V

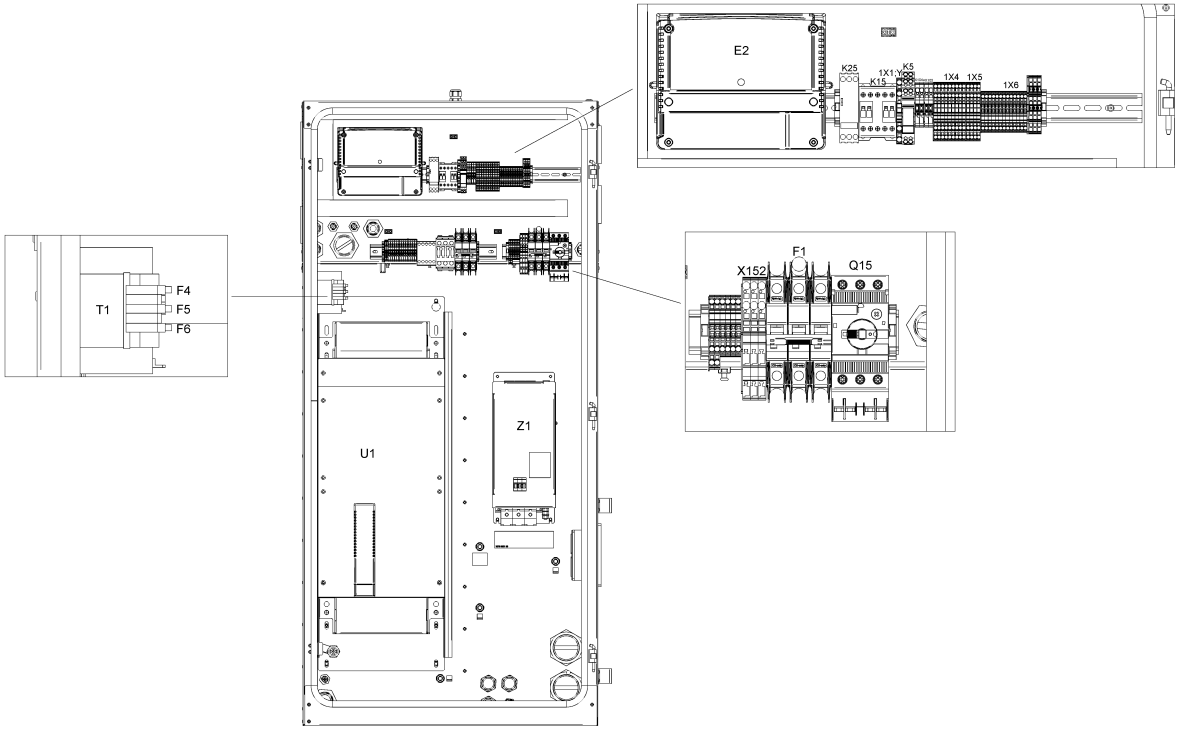
E2
K25
K15
1X1:Y
K5
1X4
1X5
1X6
T1
F4
F5
F6
U1
Z1
X152
F1
Q15

21.9 - Cubicle components GA 75L VSD+ - ((200V-400V-500V/50Hz, 460V/60Hz) - IEC, (230V-460V-575V/60Hz - UL-cUL)) - Full-Feature (12/12/2018 - 27/11/2019)

(((MOVOL:200V , MOVOL:400V , MOVOL:500V) + FREQ:50HZ , FREQ:60HZ + MOVOL:460V) + CAPPRE:IEC , (MOVOL:230V , MOVOL:460V , MOVOL:575V) + CAPPRE:ULCUL + FREQ:60HZ) + IDRY:Y + MODEL:GA75VP_16

Ref	Part Number	Qty	Name	Validity	EL
	1088 0039 37	1	END PLATE	**(12/12/2018 - 24/02/2019)** ((((CAPPRM:AS1210 , CAPPRM:CE , CAPPRM:MHLW , CAPPRM:MOM) + MOVOL:400V , (CAPPRM:CE + MOVOL:500V , CAPPRM:MHLW + MOVOL:200V) + COOL:AIR) + FREQ:50HZ , (CAPPRM:ASME , CAPPRM:MHLW) + FREQ:60HZ + MOVOL:460V) + CAPPRE:IEC , ((MOVOL:230V , MOVOL:575V) + COOL:AIR , MOVOL:460V) + CAPPRE:ULCUL + CAPPRM:ASME + FREQ:60HZ) **(25/02/2019 - 24/07/2019)** (((((CAPPRM:AS1210 , CAPPRM:CE , CAPPRM:MHLW , CAPPRM:MOM) + MOVOL:400V , CAPPRM:CE + MOVOL:500V , CAPPRM:MHLW + MOVOL:200V) + FREQ:50HZ , (CAPPRM:ASME , CAPPRM:MHLW) + FREQ:60HZ + MOVOL:460V) + CAPPRE:IEC , (MOVOL:230V , MOVOL:460V , MOVOL:575V) + CAPPRE:ULCUL + CAPPRM:ASME + FREQ:60HZ) + COOL:AIR , CAPPRE:IEC + CAPPRM:MHLW + COOL:WATER + FREQ:60HZ + MOVOL:460V) **(25/07/2019 - 27/11/2019)** ((((CAPPRM:AS1210 , CAPPRM:CE , CAPPRM:MHLW , CAPPRM:MOM) + MOVOL:400V , CAPPRM:CE + MOVOL:500V , CAPPRM:MHLW + MOVOL:200V) + FREQ:50HZ , (CAPPRM:ASME , CAPPRM:MHLW) + FREQ:60HZ + MOVOL:460V) + CAPPRE:IEC , (MOVOL:230V , MOVOL:460V , MOVOL:575V) + CAPPRE:ULCUL + CAPPRM:ASME + FREQ:60HZ) + COOL:AIR	1X1:Y/D
	1088 0037 81	1	CONNECTOR	**(12/12/2018 - 24/02/2019)** ((((CAPPRM:AS1210 , CAPPRM:CE , CAPPRM:MHLW , CAPPRM:MOM) + MOVOL:400V , (CAPPRM:CE + MOVOL:500V , CAPPRM:MHLW + MOVOL:200V) + COOL:AIR) + FREQ:50HZ , (CAPPRM:ASME , CAPPRM:MHLW) + FREQ:60HZ + MOVOL:460V) + CAPPRE:IEC , ((MOVOL:230V , MOVOL:575V) + COOL:AIR , MOVOL:460V) + CAPPRE:ULCUL + CAPPRM:ASME + FREQ:60HZ) **(25/02/2019 - 24/07/2019)** (((((CAPPRM:AS1210 , CAPPRM:CE , CAPPRM:MHLW , CAPPRM:MOM) + MOVOL:400V , CAPPRM:CE + MOVOL:500V , CAPPRM:MHLW + MOVOL:200V) + FREQ:50HZ , (CAPPRM:ASME , CAPPRM:MHLW) + FREQ:60HZ + MOVOL:460V) + CAPPRE:IEC , (MOVOL:230V , MOVOL:460V , MOVOL:575V) + CAPPRE:ULCUL + CAPPRM:ASME + FREQ:60HZ) + COOL:AIR , CAPPRE:IEC + CAPPRM:MHLW + COOL:WATER + FREQ:60HZ + MOVOL:460V) **(25/07/2019 - 27/11/2019)** ((((CAPPRM:AS1210 , CAPPRM:CE , CAPPRM:MHLW , CAPPRM:MOM) + MOVOL:400V , CAPPRM:CE + MOVOL:500V , CAPPRM:MHLW + MOVOL:200V) + FREQ:50HZ , (CAPPRM:ASME , CAPPRM:MHLW) + FREQ:60HZ + MOVOL:460V) + CAPPRE:IEC , (MOVOL:230V , MOVOL:460V , MOVOL:575V) + CAPPRE:ULCUL + CAPPRM:ASME + FREQ:60HZ) + COOL:AIR	2X27

Legend:

CAPPRE:IEC - Component approval electrical:IEC
CAPPRE:ULCUL - Component approval electrical:UL/cUL
CAPPRM:AS1210 - Component approval mechanical:AS1210
CAPPRM:ASME - Component approval mechanical:ASME
CAPPRM:CE - Component approval mechanical:CE
CAPPRM:MHLW - Component approval mechanical:MHLW
CAPPRM:MOM - Component approval mechanical:MOM
COOL:AIR - Cooling:Air cooled
COOL:WATER - Cooling:Water cooled
FREQ:50HZ - Frequency:50 Hz
FREQ:60HZ - Frequency:60 Hz
IDRY:Y - Integrated dryer:Yes
MODEL:GA75VP_16 - Model:GA 75VSD+
MOVOL:200V - Supply voltage:200 V
MOVOL:230V - Supply voltage:230 V
MOVOL:400V - Supply voltage:400 V
MOVOL:460V - Supply voltage:460 V
MOVOL:500V - Supply voltage:500 V
MOVOL:575V - Supply voltage:575 V

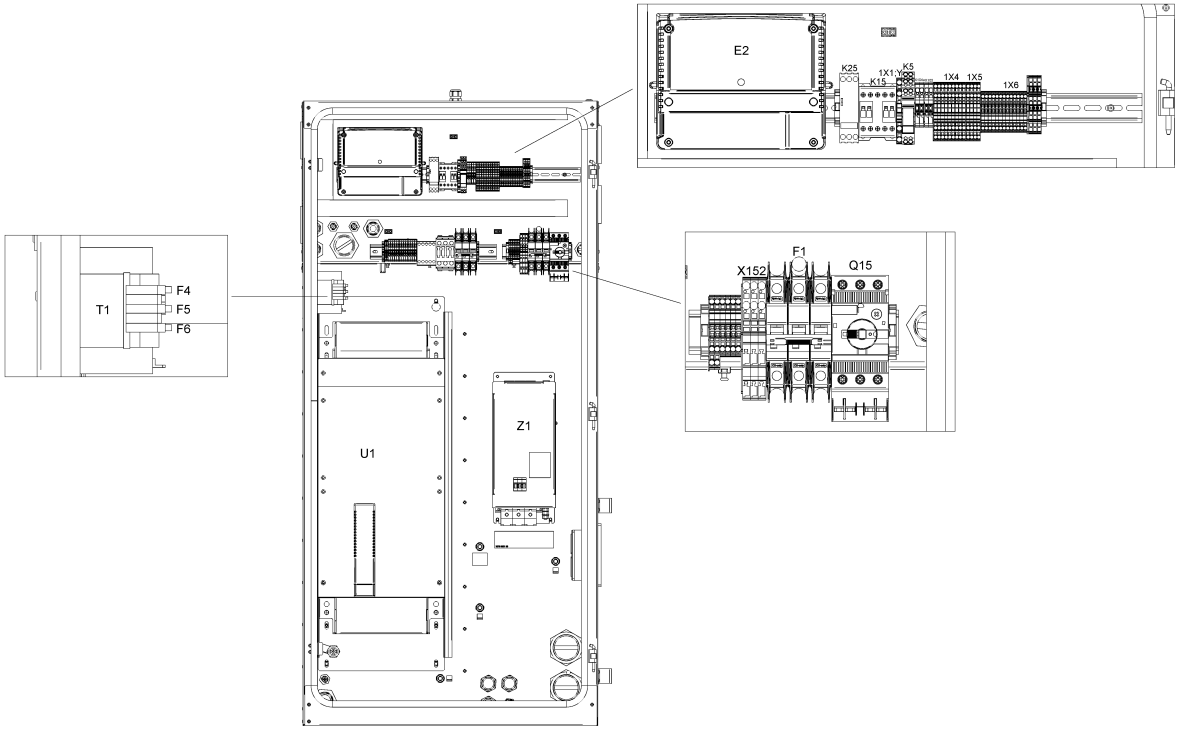
E2
K25
K15
1X1:Y
K5
1X4
1X5
1X6
T1
F4
F5
F6
U1
Z1
X152
F1
Q15

21.9 - Cubicle components GA 75L VSD+ - ((200V-400V-500V/50Hz, 460V/60Hz) - IEC, (230V-460V-575V/60Hz - UL-cUL)) - Full-Feature (12/12/2018 - 27/11/2019)

(((MOVOL:200V , MOVOL:400V , MOVOL:500V) + FREQ:50HZ , FREQ:60HZ + MOVOL:460V) + CAPPRE:IEC , (MOVOL:230V , MOVOL:460V , MOVOL:575V) + CAPPRE:ULCUL + FREQ:60HZ) + IDRY:Y + MODEL:GA75VP_16

Ref	Part Number	Qty	Name	Validity	EL
	1088 0037 80	1	CONNECTOR	**(12/12/2018 - 24/02/2019)** ((((CAPPRM:AS1210 , CAPPRM:CE , CAPPRM:MHLW , CAPPRM:MOM) + MOVOL:400V , (CAPPRM:CE + MOVOL:500V , CAPPRM:MHLW + MOVOL:200V) + COOL:AIR) + FREQ:50HZ , (CAPPRM:ASME , CAPPRM:MHLW) + FREQ:60HZ + MOVOL:460V) + CAPPRE:IEC , ((MOVOL:230V , MOVOL:575V) + COOL:AIR , MOVOL:460V) + CAPPRE:ULCUL + CAPPRM:ASME + FREQ:60HZ) **(25/02/2019 - 24/07/2019)** (((((CAPPRM:AS1210 , CAPPRM:CE , CAPPRM:MHLW , CAPPRM:MOM) + MOVOL:400V , CAPPRM:CE + MOVOL:500V , CAPPRM:MHLW + MOVOL:200V) + FREQ:50HZ , (CAPPRM:ASME , CAPPRM:MHLW) + FREQ:60HZ + MOVOL:460V) + CAPPRE:IEC , (MOVOL:230V , MOVOL:460V , MOVOL:575V) + CAPPRE:ULCUL + CAPPRM:ASME + FREQ:60HZ) + COOL:AIR , CAPPRE:IEC + CAPPRM:MHLW + COOL:WATER + FREQ:60HZ + MOVOL:460V) **(25/07/2019 - 27/11/2019)** ((((CAPPRM:AS1210 , CAPPRM:CE , CAPPRM:MHLW , CAPPRM:MOM) + MOVOL:400V , CAPPRM:CE + MOVOL:500V , CAPPRM:MHLW + MOVOL:200V) + FREQ:50HZ , (CAPPRM:ASME , CAPPRM:MHLW) + FREQ:60HZ + MOVOL:460V) + CAPPRE:IEC , (MOVOL:230V , MOVOL:460V , MOVOL:575V) + CAPPRE:ULCUL + CAPPRM:ASME + FREQ:60HZ) + COOL:AIR	2X28
	1088 0031 32	1	CONNECTOR	**(12/12/2018 - 24/02/2019)** ((((CAPPRM:AS1210 , CAPPRM:CE , CAPPRM:MHLW , CAPPRM:MOM) + MOVOL:400V , (CAPPRM:CE + MOVOL:500V , CAPPRM:MHLW + MOVOL:200V) + COOL:AIR) + FREQ:50HZ , (CAPPRM:ASME , CAPPRM:MHLW) + FREQ:60HZ + MOVOL:460V) + CAPPRE:IEC , ((MOVOL:230V , MOVOL:575V) + COOL:AIR , MOVOL:460V) + CAPPRE:ULCUL + CAPPRM:ASME + FREQ:60HZ) **(25/02/2019 - 24/07/2019)** (((((CAPPRM:AS1210 , CAPPRM:CE , CAPPRM:MHLW , CAPPRM:MOM) + MOVOL:400V , CAPPRM:CE + MOVOL:500V , CAPPRM:MHLW + MOVOL:200V) + FREQ:50HZ , (CAPPRM:ASME , CAPPRM:MHLW) + FREQ:60HZ + MOVOL:460V) + CAPPRE:IEC , (MOVOL:230V , MOVOL:460V , MOVOL:575V) + CAPPRE:ULCUL + CAPPRM:ASME + FREQ:60HZ) + COOL:AIR , CAPPRE:IEC + CAPPRM:MHLW + COOL:WATER + FREQ:60HZ + MOVOL:460V) **(25/07/2019 - 27/11/2019)** ((((CAPPRM:AS1210 , CAPPRM:CE , CAPPRM:MHLW , CAPPRM:MOM) + MOVOL:400V , CAPPRM:CE + MOVOL:500V , CAPPRM:MHLW + MOVOL:200V) + FREQ:50HZ , (CAPPRM:ASME , CAPPRM:MHLW) + FREQ:60HZ + MOVOL:460V) + CAPPRE:IEC , (MOVOL:230V , MOVOL:460V , MOVOL:575V) + CAPPRE:ULCUL + CAPPRM:ASME + FREQ:60HZ) + COOL:AIR	2X30

Legend:

CAPPRE:IEC - Component approval electrical:IEC
CAPPRE:ULCUL - Component approval electrical:UL/cUL
CAPPRM:AS1210 - Component approval mechanical:AS1210
CAPPRM:ASME - Component approval mechanical:ASME
CAPPRM:CE - Component approval mechanical:CE
CAPPRM:MHLW - Component approval mechanical:MHLW
CAPPRM:MOM - Component approval mechanical:MOM
COOL:AIR - Cooling:Air cooled
COOL:WATER - Cooling:Water cooled
FREQ:50HZ - Frequency:50 Hz
FREQ:60HZ - Frequency:60 Hz
IDRY:Y - Integrated dryer:Yes
MODEL:GA75VP_16 - Model:GA 75VSD+
MOVOL:200V - Supply voltage:200 V
MOVOL:230V - Supply voltage:230 V
MOVOL:400V - Supply voltage:400 V
MOVOL:460V - Supply voltage:460 V
MOVOL:500V - Supply voltage:500 V
MOVOL:575V - Supply voltage:575 V

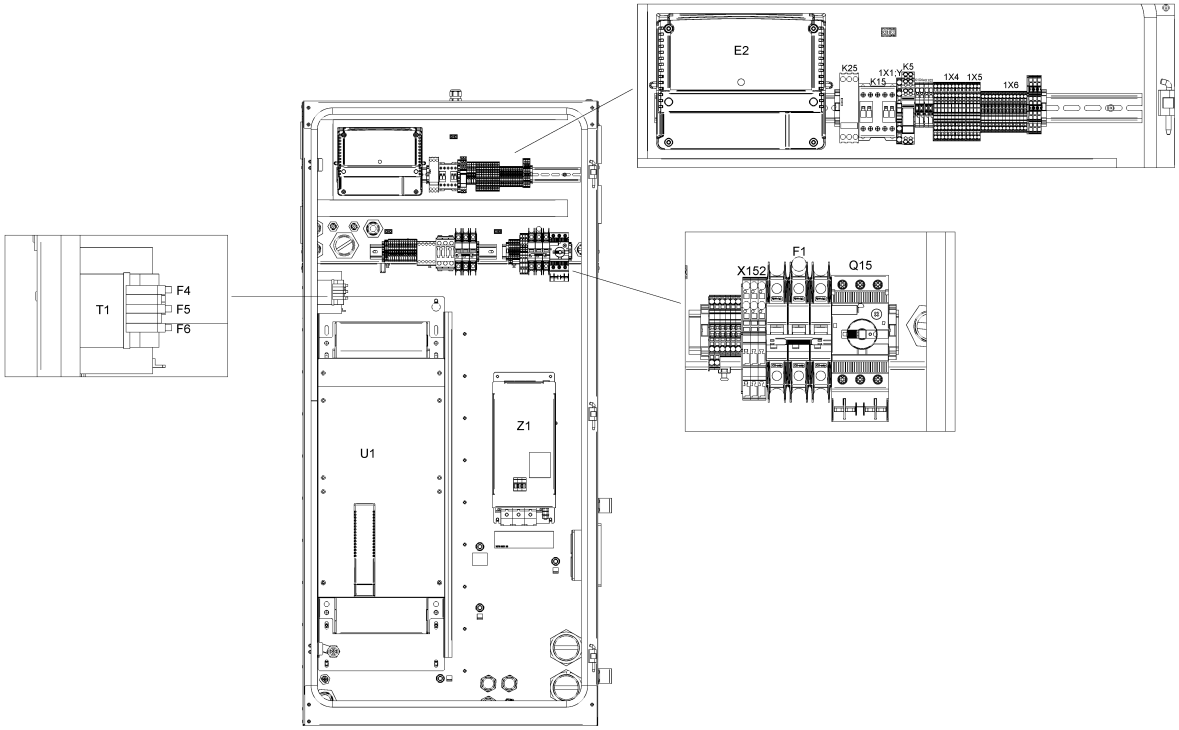
E2
K25
K15
1X1:Y
K5
1X4
1X5
1X6
T1
F4
F5
F6
U1
Z1
X152
F1
Q15

21.9 - Cubicle components GA 75L VSD+ - ((200V-400V-500V/50Hz, 460V/60Hz) - IEC, (230V-460V-575V/60Hz - UL-cUL)) - Full-Feature (12/12/2018 - 27/11/2019)

(((MOVOL:200V , MOVOL:400V , MOVOL:500V) + FREQ:50HZ , FREQ:60HZ + MOVOL:460V) + CAPPRE:IEC , (MOVOL:230V , MOVOL:460V , MOVOL:575V) + CAPPRE:ULCUL + FREQ:60HZ) + IDRY:Y + MODEL:GA75VP_16

Ref	Part Number	Qty	Name	Validity	EL
	1088 0031 26	1	CONNECTOR 6-POLE	**(12/12/2018 - 24/02/2019)** ((((CAPPRM:AS1210 , CAPPRM:CE , CAPPRM:MHLW , CAPPRM:MOM) + MOVOL:400V , (CAPPRM:CE + MOVOL:500V , CAPPRM:MHLW + MOVOL:200V) + COOL:AIR) + FREQ:50HZ , (CAPPRM:ASME , CAPPRM:MHLW) + FREQ:60HZ + MOVOL:460V) + CAPPRE:IEC , ((MOVOL:230V , MOVOL:575V) + COOL:AIR , MOVOL:460V) + CAPPRE:ULCUL + CAPPRM:ASME + FREQ:60HZ) **(25/02/2019 - 24/07/2019)** (((((CAPPRM:AS1210 , CAPPRM:CE , CAPPRM:MHLW , CAPPRM:MOM) + MOVOL:400V , CAPPRM:CE + MOVOL:500V , CAPPRM:MHLW + MOVOL:200V) + FREQ:50HZ , (CAPPRM:ASME , CAPPRM:MHLW) + FREQ:60HZ + MOVOL:460V) + CAPPRE:IEC , (MOVOL:230V , MOVOL:460V , MOVOL:575V) + CAPPRE:ULCUL + CAPPRM:ASME + FREQ:60HZ) + COOL:AIR , CAPPRE:IEC + CAPPRM:MHLW + COOL:WATER + FREQ:60HZ + MOVOL:460V) **(25/07/2019 - 27/11/2019)** ((((CAPPRM:AS1210 , CAPPRM:CE , CAPPRM:MHLW , CAPPRM:MOM) + MOVOL:400V , CAPPRM:CE + MOVOL:500V , CAPPRM:MHLW + MOVOL:200V) + FREQ:50HZ , (CAPPRM:ASME , CAPPRM:MHLW) + FREQ:60HZ + MOVOL:460V) + CAPPRE:IEC , (MOVOL:230V , MOVOL:460V , MOVOL:575V) + CAPPRE:ULCUL + CAPPRM:ASME + FREQ:60HZ) + COOL:AIR	2X31
	~~1089 9664 06~~	1	SWITCH	**(12/12/2018 - 24/02/2019)** ((((CAPPRM:AS1210 , CAPPRM:CE , CAPPRM:MHLW , CAPPRM:MOM) + MOVOL:400V , (CAPPRM:CE + MOVOL:500V , CAPPRM:MHLW + MOVOL:200V) + COOL:AIR) + FREQ:50HZ , (CAPPRM:ASME , CAPPRM:MHLW) + FREQ:60HZ + MOVOL:460V) + CAPPRE:IEC , ((MOVOL:230V , MOVOL:575V) + COOL:AIR , MOVOL:460V) + CAPPRE:ULCUL + CAPPRM:ASME + FREQ:60HZ) **(25/02/2019 - 24/07/2019)** (((((CAPPRM:AS1210 , CAPPRM:CE , CAPPRM:MHLW , CAPPRM:MOM) + MOVOL:400V , CAPPRM:CE + MOVOL:500V , CAPPRM:MHLW + MOVOL:200V) + FREQ:50HZ , (CAPPRM:ASME , CAPPRM:MHLW) + FREQ:60HZ + MOVOL:460V) + CAPPRE:IEC , (MOVOL:230V , MOVOL:460V , MOVOL:575V) + CAPPRE:ULCUL + CAPPRM:ASME + FREQ:60HZ) + COOL:AIR , CAPPRE:IEC + CAPPRM:MHLW + COOL:WATER + FREQ:60HZ + MOVOL:460V) **(25/07/2019 - 27/11/2019)** ((((CAPPRM:AS1210 , CAPPRM:CE , CAPPRM:MHLW , CAPPRM:MOM) + MOVOL:400V , CAPPRM:CE + MOVOL:500V , CAPPRM:MHLW + MOVOL:200V) + FREQ:50HZ , (CAPPRM:ASME , CAPPRM:MHLW) + FREQ:60HZ + MOVOL:460V) + CAPPRE:IEC , (MOVOL:230V , MOVOL:460V , MOVOL:575V) + CAPPRE:ULCUL + CAPPRM:ASME + FREQ:60HZ) + COOL:AIR	Q15
	Substituted by:		1089 9551 97 - AUX.CONTACT CIRCUIT BREAKER (quantity: 1)		

Legend:

CAPPRE:IEC - Component approval electrical:IEC
CAPPRE:ULCUL - Component approval electrical:UL/cUL
CAPPRM:AS1210 - Component approval mechanical:AS1210
CAPPRM:ASME - Component approval mechanical:ASME
CAPPRM:CE - Component approval mechanical:CE
CAPPRM:MHLW - Component approval mechanical:MHLW
CAPPRM:MOM - Component approval mechanical:MOM
COOL:AIR - Cooling:Air cooled
COOL:WATER - Cooling:Water cooled
FREQ:50HZ - Frequency:50 Hz
FREQ:60HZ - Frequency:60 Hz
IDRY:Y - Integrated dryer:Yes
MODEL:GA75VP_16 - Model:GA 75VSD+
MOVOL:200V - Supply voltage:200 V
MOVOL:230V - Supply voltage:230 V
MOVOL:400V - Supply voltage:400 V
MOVOL:460V - Supply voltage:460 V
MOVOL:500V - Supply voltage:500 V
MOVOL:575V - Supply voltage:575 V

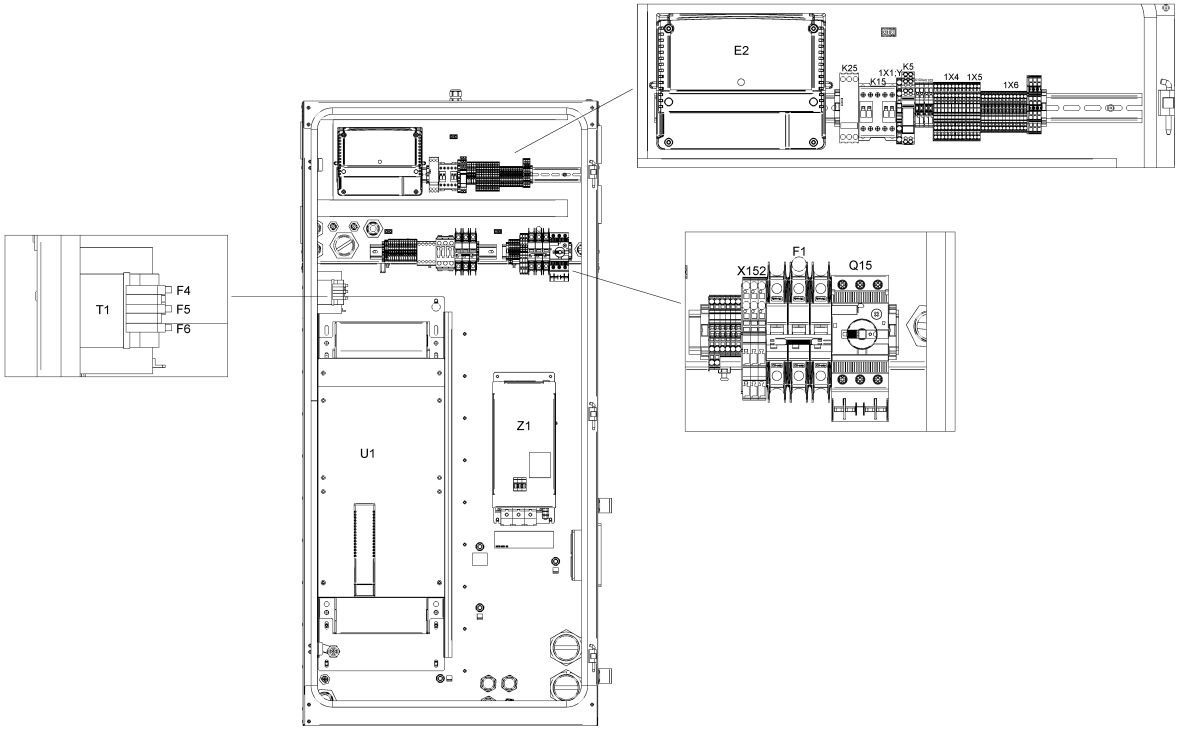
E2
K25
K15
1X1:Y
K5
1X4
1X5
1X6
T1
F4
F5
F6
U1
Z1
X152
F1
Q15

21.9 - Cubicle components GA 75L VSD+ - ((200V-400V-500V/50Hz, 460V/60Hz) - IEC, (230V-460V-575V/60Hz - UL-cUL)) - Full-Feature (12/12/2018 - 27/11/2019)

(((MOVOL:200V , MOVOL:400V , MOVOL:500V) + FREQ:50HZ , FREQ:60HZ + MOVOL:460V) + CAPPRE:IEC , (MOVOL:230V , MOVOL:460V , MOVOL:575V) + CAPPRE:ULCUL + FREQ:60HZ) + IDRY:Y + MODEL:GA75VP_16

Ref	Part Number	Qty	Name	Validity	EL
	1089 9551 18	1	CIRCUIT BREAKER	**(12/12/2018 - 24/02/2019)** ((((CAPPRM:AS1210 , CAPPRM:CE , CAPPRM:MHLW , CAPPRM:MOM) + MOVOL:400V , (CAPPRM:CE + MOVOL:500V , CAPPRM:MHLW + MOVOL:200V) + COOL:AIR) + FREQ:50HZ , (CAPPRM:ASME , CAPPRM:MHLW) + FREQ:60HZ + MOVOL:460V) + CAPPRE:IEC , ((MOVOL:230V , MOVOL:575V) + COOL:AIR , MOVOL:460V) + CAPPRE:ULCUL + CAPPRM:ASME + FREQ:60HZ) **(25/02/2019 - 24/07/2019)** (((((CAPPRM:AS1210 , CAPPRM:CE , CAPPRM:MHLW , CAPPRM:MOM) + MOVOL:400V , CAPPRM:CE + MOVOL:500V , CAPPRM:MHLW + MOVOL:200V) + FREQ:50HZ , (CAPPRM:ASME , CAPPRM:MHLW) + FREQ:60HZ + MOVOL:460V) + CAPPRE:IEC , (MOVOL:230V , MOVOL:460V , MOVOL:575V) + CAPPRE:ULCUL + CAPPRM:ASME + FREQ:60HZ) + COOL:AIR , CAPPRE:IEC + CAPPRM:MHLW + COOL:WATER + FREQ:60HZ + MOVOL:460V) **(25/07/2019 - 27/11/2019)** ((((CAPPRM:AS1210 , CAPPRM:CE , CAPPRM:MHLW , CAPPRM:MOM) + MOVOL:400V , CAPPRM:CE + MOVOL:500V , CAPPRM:MHLW + MOVOL:200V) + FREQ:50HZ , (CAPPRM:ASME , CAPPRM:MHLW) + FREQ:60HZ + MOVOL:460V) + CAPPRE:IEC , (MOVOL:230V , MOVOL:460V , MOVOL:575V) + CAPPRE:ULCUL + CAPPRM:ASME + FREQ:60HZ) + COOL:AIR	Q15
	1088 0038 26	1	TERMINAL	**(12/12/2018 - 24/02/2019)** ((((CAPPRM:AS1210 , CAPPRM:CE , CAPPRM:MHLW , CAPPRM:MOM) + MOVOL:400V , (CAPPRM:CE + MOVOL:500V , CAPPRM:MHLW + MOVOL:200V) + COOL:AIR) + FREQ:50HZ , (CAPPRM:ASME , CAPPRM:MHLW) + FREQ:60HZ + MOVOL:460V) + CAPPRE:IEC , ((MOVOL:230V , MOVOL:575V) + COOL:AIR , MOVOL:460V) + CAPPRE:ULCUL + CAPPRM:ASME + FREQ:60HZ) **(25/02/2019 - 24/07/2019)** (((((CAPPRM:AS1210 , CAPPRM:CE , CAPPRM:MHLW , CAPPRM:MOM) + MOVOL:400V , CAPPRM:CE + MOVOL:500V , CAPPRM:MHLW + MOVOL:200V) + FREQ:50HZ , (CAPPRM:ASME , CAPPRM:MHLW) + FREQ:60HZ + MOVOL:460V) + CAPPRE:IEC , (MOVOL:230V , MOVOL:460V , MOVOL:575V) + CAPPRE:ULCUL + CAPPRM:ASME + FREQ:60HZ) + COOL:AIR , CAPPRE:IEC + CAPPRM:MHLW + COOL:WATER + FREQ:60HZ + MOVOL:460V) **(25/07/2019 - 27/11/2019)** ((((CAPPRM:AS1210 , CAPPRM:CE , CAPPRM:MHLW , CAPPRM:MOM) + MOVOL:400V , CAPPRM:CE + MOVOL:500V , CAPPRM:MHLW + MOVOL:200V) + FREQ:50HZ , (CAPPRM:ASME , CAPPRM:MHLW) + FREQ:60HZ + MOVOL:460V) + CAPPRE:IEC , (MOVOL:230V , MOVOL:460V , MOVOL:575V) + CAPPRE:ULCUL + CAPPRM:ASME + FREQ:60HZ) + COOL:AIR	1X1:Y/D

Legend:

CAPPRE:IEC - Component approval electrical:IEC
CAPPRE:ULCUL - Component approval electrical:UL/cUL
CAPPRM:AS1210 - Component approval mechanical:AS1210
CAPPRM:ASME - Component approval mechanical:ASME
CAPPRM:CE - Component approval mechanical:CE
CAPPRM:MHLW - Component approval mechanical:MHLW
CAPPRM:MOM - Component approval mechanical:MOM
COOL:AIR - Cooling:Air cooled
COOL:WATER - Cooling:Water cooled
FREQ:50HZ - Frequency:50 Hz
FREQ:60HZ - Frequency:60 Hz
IDRY:Y - Integrated dryer:Yes
MODEL:GA75VP_16 - Model:GA 75VSD+
MOVOL:200V - Supply voltage:200 V
MOVOL:230V - Supply voltage:230 V
MOVOL:400V - Supply voltage:400 V
MOVOL:460V - Supply voltage:460 V
MOVOL:500V - Supply voltage:500 V
MOVOL:575V - Supply voltage:575 V

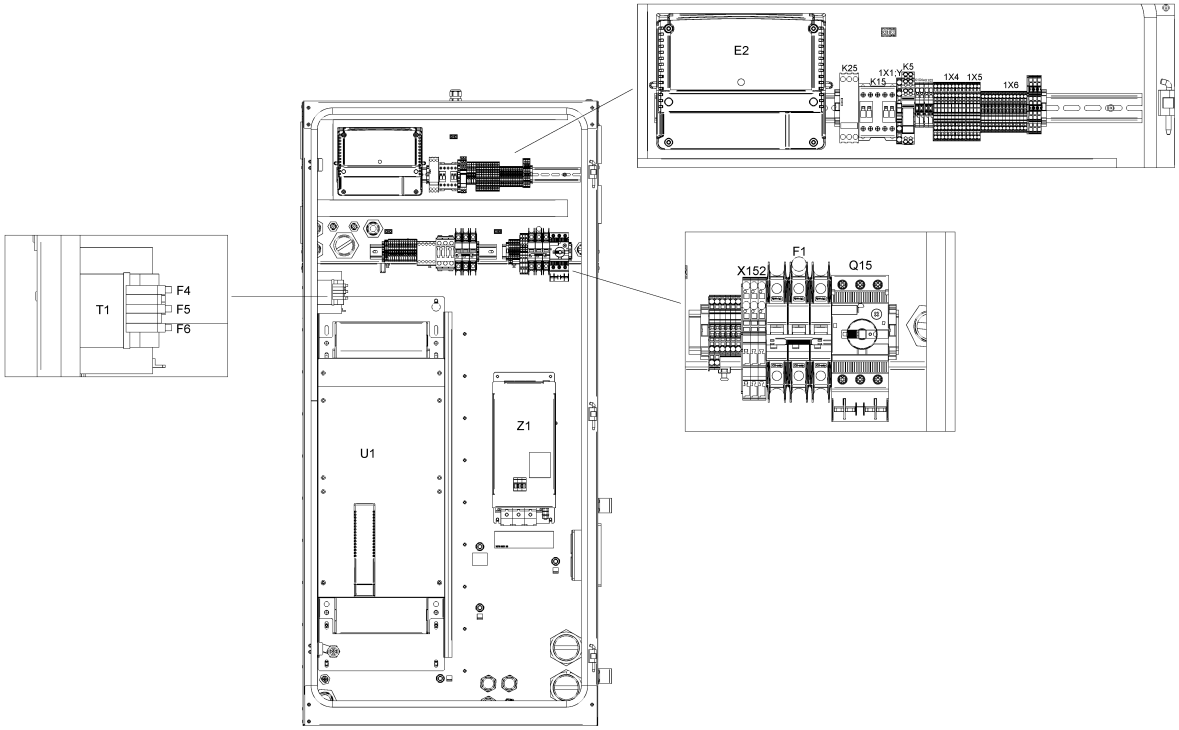
E2
K25
K15
1X1:Y
K5
1X4
1X5
1X6
T1
F4
F5
F6
U1
Z1
X152
F1
Q15

Ref	Part Number	Qty	Name	Validity	EL
	1089 9602 79	1	CONTACTOR 110 V	**(12/12/2018 - 24/02/2019)** ((((CAPPRM:AS1210 , CAPPRM:CE , CAPPRM:MHLW , CAPPRM:MOM) + MOVOL:400V , (CAPPRM:CE + MOVOL:500V , CAPPRM:MHLW + MOVOL:200V) + COOL:AIR) + FREQ:50HZ , (CAPPRM:ASME , CAPPRM:MHLW) + FREQ:60HZ + MOVOL:460V) + CAPPRE:IEC , ((MOVOL:230V , MOVOL:575V) + COOL:AIR , MOVOL:460V) + CAPPRE:ULCUL + CAPPRM:ASME + FREQ:60HZ) **(25/02/2019 - 24/07/2019)** (((((CAPPRM:AS1210 , CAPPRM:CE , CAPPRM:MHLW , CAPPRM:MOM) + MOVOL:400V , CAPPRM:CE + MOVOL:500V , CAPPRM:MHLW + MOVOL:200V) + FREQ:50HZ , (CAPPRM:ASME , CAPPRM:MHLW) + FREQ:60HZ + MOVOL:460V) + CAPPRE:IEC , (MOVOL:230V , MOVOL:460V , MOVOL:575V) + CAPPRE:ULCUL + CAPPRM:ASME + FREQ:60HZ) + COOL:AIR , CAPPRE:IEC + CAPPRM:MHLW + COOL:WATER + FREQ:60HZ + MOVOL:460V) **(25/07/2019 - 27/11/2019)** ((((CAPPRM:AS1210 , CAPPRM:CE , CAPPRM:MHLW , CAPPRM:MOM) + MOVOL:400V , CAPPRM:CE + MOVOL:500V , CAPPRM:MHLW + MOVOL:200V) + FREQ:50HZ , (CAPPRM:ASME , CAPPRM:MHLW) + FREQ:60HZ + MOVOL:460V) + CAPPRE:IEC , (MOVOL:230V , MOVOL:460V , MOVOL:575V) + CAPPRE:ULCUL + CAPPRM:ASME + FREQ:60HZ) + COOL:AIR	K15
	1089 9461 26	1	PHASE SEQUENCE RELAY	**(12/12/2018 - 24/02/2019)** ((((CAPPRM:AS1210 , CAPPRM:CE , CAPPRM:MHLW , CAPPRM:MOM) + MOVOL:400V , (CAPPRM:CE + MOVOL:500V , CAPPRM:MHLW + MOVOL:200V) + COOL:AIR) + FREQ:50HZ , (CAPPRM:ASME , CAPPRM:MHLW) + FREQ:60HZ + MOVOL:460V) + CAPPRE:IEC , ((MOVOL:230V , MOVOL:575V) + COOL:AIR , MOVOL:460V) + CAPPRE:ULCUL + CAPPRM:ASME + FREQ:60HZ) **(25/02/2019 - 24/07/2019)** (((((CAPPRM:AS1210 , CAPPRM:CE , CAPPRM:MHLW , CAPPRM:MOM) + MOVOL:400V , CAPPRM:CE + MOVOL:500V , CAPPRM:MHLW + MOVOL:200V) + FREQ:50HZ , (CAPPRM:ASME , CAPPRM:MHLW) + FREQ:60HZ + MOVOL:460V) + CAPPRE:IEC , (MOVOL:230V , MOVOL:460V , MOVOL:575V) + CAPPRE:ULCUL + CAPPRM:ASME + FREQ:60HZ) + COOL:AIR , CAPPRE:IEC + CAPPRM:MHLW + COOL:WATER + FREQ:60HZ + MOVOL:460V) **(25/07/2019 - 27/11/2019)** ((((CAPPRM:AS1210 , CAPPRM:CE , CAPPRM:MHLW , CAPPRM:MOM) + MOVOL:400V , CAPPRM:CE + MOVOL:500V , CAPPRM:MHLW + MOVOL:200V) + FREQ:50HZ , (CAPPRM:ASME , CAPPRM:MHLW) + FREQ:60HZ + MOVOL:460V) + CAPPRE:IEC , (MOVOL:230V , MOVOL:460V , MOVOL:575V) + CAPPRE:ULCUL + CAPPRM:ASME + FREQ:60HZ) + COOL:AIR	K25

Legend:

CAPPRE:IEC - Component approval electrical:IEC
CAPPRE:ULCUL - Component approval electrical:UL/cUL
CAPPRM:AS1210 - Component approval mechanical:AS1210
CAPPRM:ASME - Component approval mechanical:ASME
CAPPRM:CE - Component approval mechanical:CE
CAPPRM:MHLW - Component approval mechanical:MHLW
CAPPRM:MOM - Component approval mechanical:MOM
COOL:AIR - Cooling:Air cooled
COOL:WATER - Cooling:Water cooled
FREQ:50HZ - Frequency:50 Hz
FREQ:60HZ - Frequency:60 Hz
IDRY:Y - Integrated dryer:Yes
MODEL:GA75VP_16 - Model:GA 75VSD+
MOVOL:200V - Supply voltage:200 V
MOVOL:230V - Supply voltage:230 V
MOVOL:400V - Supply voltage:400 V
MOVOL:460V - Supply voltage:460 V
MOVOL:500V - Supply voltage:500 V
MOVOL:575V - Supply voltage:575 V

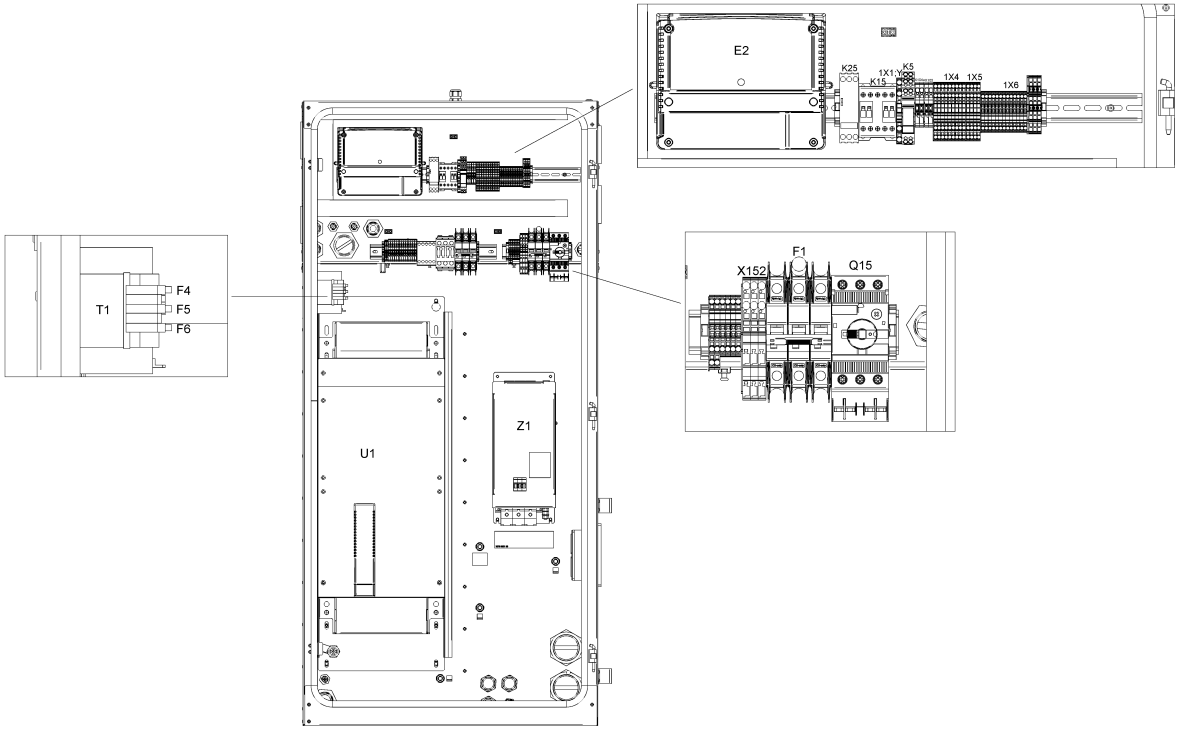
E2
K25
K15
1X1:Y
K5
1X4
1X5
1X6
T1
F4
F5
F6
U1
Z1
X152
F1
Q15

21.9 - Cubicle components GA 75L VSD+ - ((200V-400V-500V/50Hz, 460V/60Hz) - IEC, (230V-460V-575V/60Hz - UL-cUL)) - Full-Feature (12/12/2018 - 27/11/2019)

(((MOVOL:200V , MOVOL:400V , MOVOL:500V) + FREQ:50HZ , FREQ:60HZ + MOVOL:460V) + CAPPRE:IEC , (MOVOL:230V , MOVOL:460V , MOVOL:575V) + CAPPRE:ULCUL + FREQ:60HZ) + IDRY:Y + MODEL:GA75VP_16

Ref	Part Number	Qty	Name	Validity	EL
	1088 0032 17	1	RELAY 115 VAC	**(12/12/2018 - 24/02/2019)** ((((CAPPRM:AS1210 , CAPPRM:CE , CAPPRM:MHLW , CAPPRM:MOM) + MOVOL:400V , (CAPPRM:CE + MOVOL:500V , CAPPRM:MHLW + MOVOL:200V) + COOL:AIR) + FREQ:50HZ , (CAPPRM:ASME , CAPPRM:MHLW) + FREQ:60HZ + MOVOL:460V) + CAPPRE:IEC , ((MOVOL:230V , MOVOL:575V) + COOL:AIR , MOVOL:460V) + CAPPRE:ULCUL + CAPPRM:ASME + FREQ:60HZ) **(25/02/2019 - 24/07/2019)** (((((CAPPRM:AS1210 , CAPPRM:CE , CAPPRM:MHLW , CAPPRM:MOM) + MOVOL:400V , CAPPRM:CE + MOVOL:500V , CAPPRM:MHLW + MOVOL:200V) + FREQ:50HZ , (CAPPRM:ASME , CAPPRM:MHLW) + FREQ:60HZ + MOVOL:460V) + CAPPRE:IEC , (MOVOL:230V , MOVOL:460V , MOVOL:575V) + CAPPRE:ULCUL + CAPPRM:ASME + FREQ:60HZ) + COOL:AIR , CAPPRE:IEC + CAPPRM:MHLW + COOL:WATER + FREQ:60HZ + MOVOL:460V) **(25/07/2019 - 27/11/2019)** ((((CAPPRM:AS1210 , CAPPRM:CE , CAPPRM:MHLW , CAPPRM:MOM) + MOVOL:400V , CAPPRM:CE + MOVOL:500V , CAPPRM:MHLW + MOVOL:200V) + FREQ:50HZ , (CAPPRM:ASME , CAPPRM:MHLW) + FREQ:60HZ + MOVOL:460V) + CAPPRE:IEC , (MOVOL:230V , MOVOL:460V , MOVOL:575V) + CAPPRE:ULCUL + CAPPRM:ASME + FREQ:60HZ) + COOL:AIR	K5
	0991 8011 21	AR	CABLE TRAY	**(12/12/2018 - 24/02/2019)** ((((CAPPRM:AS1210 , CAPPRM:CE , CAPPRM:MHLW , CAPPRM:MOM) + MOVOL:400V , (CAPPRM:CE + MOVOL:500V , CAPPRM:MHLW + MOVOL:200V) + COOL:AIR) + FREQ:50HZ , (CAPPRM:ASME , CAPPRM:MHLW) + FREQ:60HZ + MOVOL:460V) + CAPPRE:IEC , ((MOVOL:230V , MOVOL:575V) + COOL:AIR , MOVOL:460V) + CAPPRE:ULCUL + CAPPRM:ASME + FREQ:60HZ) **(25/02/2019 - 24/07/2019)** (((((CAPPRM:AS1210 , CAPPRM:CE , CAPPRM:MHLW , CAPPRM:MOM) + MOVOL:400V , CAPPRM:CE + MOVOL:500V , CAPPRM:MHLW + MOVOL:200V) + FREQ:50HZ , (CAPPRM:ASME , CAPPRM:MHLW) + FREQ:60HZ + MOVOL:460V) + CAPPRE:IEC , (MOVOL:230V , MOVOL:460V , MOVOL:575V) + CAPPRE:ULCUL + CAPPRM:ASME + FREQ:60HZ) + COOL:AIR , CAPPRE:IEC + CAPPRM:MHLW + COOL:WATER + FREQ:60HZ + MOVOL:460V) **(25/07/2019 - 27/11/2019)** ((((CAPPRM:AS1210 , CAPPRM:CE , CAPPRM:MHLW , CAPPRM:MOM) + MOVOL:400V , CAPPRM:CE + MOVOL:500V , CAPPRM:MHLW + MOVOL:200V) + FREQ:50HZ , (CAPPRM:ASME , CAPPRM:MHLW) + FREQ:60HZ + MOVOL:460V) + CAPPRE:IEC , (MOVOL:230V , MOVOL:460V , MOVOL:575V) + CAPPRE:ULCUL + CAPPRM:ASME + FREQ:60HZ) + COOL:AIR	L=1384mm

Legend:

CAPPRE:IEC - Component approval electrical:IEC
CAPPRE:ULCUL - Component approval electrical:UL/cUL
CAPPRM:AS1210 - Component approval mechanical:AS1210
CAPPRM:ASME - Component approval mechanical:ASME
CAPPRM:CE - Component approval mechanical:CE
CAPPRM:MHLW - Component approval mechanical:MHLW
CAPPRM:MOM - Component approval mechanical:MOM
COOL:AIR - Cooling:Air cooled
COOL:WATER - Cooling:Water cooled
FREQ:50HZ - Frequency:50 Hz
FREQ:60HZ - Frequency:60 Hz
IDRY:Y - Integrated dryer:Yes
MODEL:GA75VP_16 - Model:GA 75VSD+
MOVOL:200V - Supply voltage:200 V
MOVOL:230V - Supply voltage:230 V
MOVOL:400V - Supply voltage:400 V
MOVOL:460V - Supply voltage:460 V
MOVOL:500V - Supply voltage:500 V
MOVOL:575V - Supply voltage:575 V

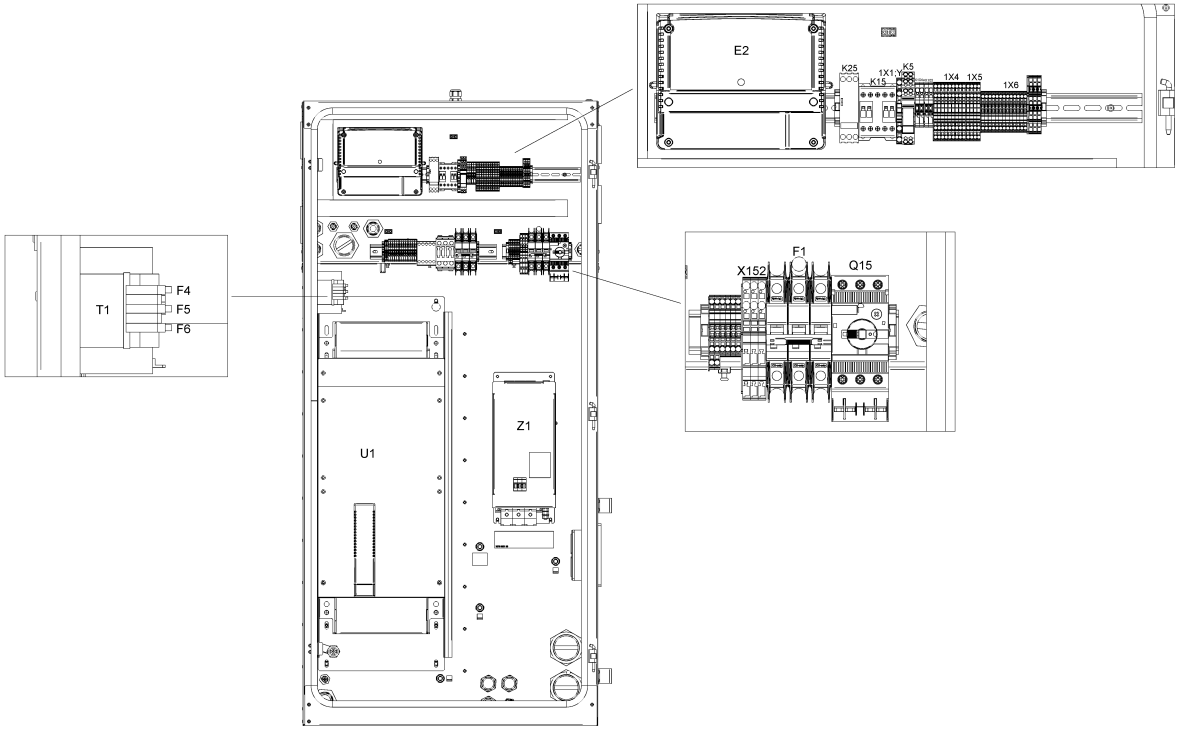
E2
K25
K15
1X1:Y
K5
1X4
1X5
1X6
T1
F4
F5
F6
U1
Z1
X152
F1
Q15

Ref	Part Number	Qty	Name	Validity	EL
	1900 2203 02	1	DRYER RAIL	**(12/12/2018 - 24/02/2019)** ((((CAPPRM:AS1210 , CAPPRM:CE , CAPPRM:MHLW , CAPPRM:MOM) + MOVOL:400V , (CAPPRM:CE + MOVOL:500V , CAPPRM:MHLW + MOVOL:200V) + COOL:AIR) + FREQ:50HZ , (CAPPRM:ASME , CAPPRM:MHLW) + FREQ:60HZ + MOVOL:460V) + CAPPRE:IEC , ((MOVOL:230V , MOVOL:575V) + COOL:AIR , MOVOL:460V) + CAPPRE:ULCUL + CAPPRM:ASME + FREQ:60HZ) **(25/02/2019 - 24/07/2019)** (((((CAPPRM:AS1210 , CAPPRM:CE , CAPPRM:MHLW , CAPPRM:MOM) + MOVOL:400V , CAPPRM:CE + MOVOL:500V , CAPPRM:MHLW + MOVOL:200V) + FREQ:50HZ , (CAPPRM:ASME , CAPPRM:MHLW) + FREQ:60HZ + MOVOL:460V) + CAPPRE:IEC , (MOVOL:230V , MOVOL:460V , MOVOL:575V) + CAPPRE:ULCUL + CAPPRM:ASME + FREQ:60HZ) + COOL:AIR , CAPPRE:IEC + CAPPRM:MHLW + COOL:WATER + FREQ:60HZ + MOVOL:460V) **(25/07/2019 - 27/11/2019)** ((((CAPPRM:AS1210 , CAPPRM:CE , CAPPRM:MHLW , CAPPRM:MOM) + MOVOL:400V , CAPPRM:CE + MOVOL:500V , CAPPRM:MHLW + MOVOL:200V) + FREQ:50HZ , (CAPPRM:ASME , CAPPRM:MHLW) + FREQ:60HZ + MOVOL:460V) + CAPPRE:IEC , (MOVOL:230V , MOVOL:460V , MOVOL:575V) + CAPPRE:ULCUL + CAPPRM:ASME + FREQ:60HZ) + COOL:AIR	
	Electrical legend:	Without trafo on dryer			
	1088 0031 13	1	CONNECTOR 13-POLE	**(12/12/2018 - 24/02/2019)** ((((CAPPRM:AS1210 , CAPPRM:CE , CAPPRM:MHLW , CAPPRM:MOM) + MOVOL:400V , (CAPPRM:CE + MOVOL:500V , CAPPRM:MHLW + MOVOL:200V) + COOL:AIR) + FREQ:50HZ , (CAPPRM:ASME , CAPPRM:MHLW) + FREQ:60HZ + MOVOL:460V) + CAPPRE:IEC , ((MOVOL:230V , MOVOL:575V) + COOL:AIR , MOVOL:460V) + CAPPRE:ULCUL + CAPPRM:ASME + FREQ:60HZ) **(25/02/2019 - 24/07/2019)** (((((CAPPRM:AS1210 , CAPPRM:CE , CAPPRM:MHLW , CAPPRM:MOM) + MOVOL:400V , CAPPRM:CE + MOVOL:500V , CAPPRM:MHLW + MOVOL:200V) + FREQ:50HZ , (CAPPRM:ASME , CAPPRM:MHLW) + FREQ:60HZ + MOVOL:460V) + CAPPRE:IEC , (MOVOL:230V , MOVOL:460V , MOVOL:575V) + CAPPRE:ULCUL + CAPPRM:ASME + FREQ:60HZ) + COOL:AIR , CAPPRE:IEC + CAPPRM:MHLW + COOL:WATER + FREQ:60HZ + MOVOL:460V) **(25/07/2019 - 27/11/2019)** ((((CAPPRM:AS1210 , CAPPRM:CE , CAPPRM:MHLW , CAPPRM:MOM) + MOVOL:400V , CAPPRM:CE + MOVOL:500V , CAPPRM:MHLW + MOVOL:200V) + FREQ:50HZ , (CAPPRM:ASME , CAPPRM:MHLW) + FREQ:60HZ + MOVOL:460V) + CAPPRE:IEC , (MOVOL:230V , MOVOL:460V , MOVOL:575V) + CAPPRE:ULCUL + CAPPRM:ASME + FREQ:60HZ) + COOL:AIR	1X30

Legend:

CAPPRE:IEC - Component approval electrical:IEC
CAPPRE:ULCUL - Component approval electrical:UL/cUL
CAPPRM:AS1210 - Component approval mechanical:AS1210
CAPPRM:ASME - Component approval mechanical:ASME
CAPPRM:CE - Component approval mechanical:CE
CAPPRM:MHLW - Component approval mechanical:MHLW
CAPPRM:MOM - Component approval mechanical:MOM
COOL:AIR - Cooling:Air cooled
COOL:WATER - Cooling:Water cooled
FREQ:50HZ - Frequency:50 Hz
FREQ:60HZ - Frequency:60 Hz
IDRY:Y - Integrated dryer:Yes
MODEL:GA75VP_16 - Model:GA 75VSD+
MOVOL:200V - Supply voltage:200 V
MOVOL:230V - Supply voltage:230 V
MOVOL:400V - Supply voltage:400 V
MOVOL:460V - Supply voltage:460 V
MOVOL:500V - Supply voltage:500 V
MOVOL:575V - Supply voltage:575 V

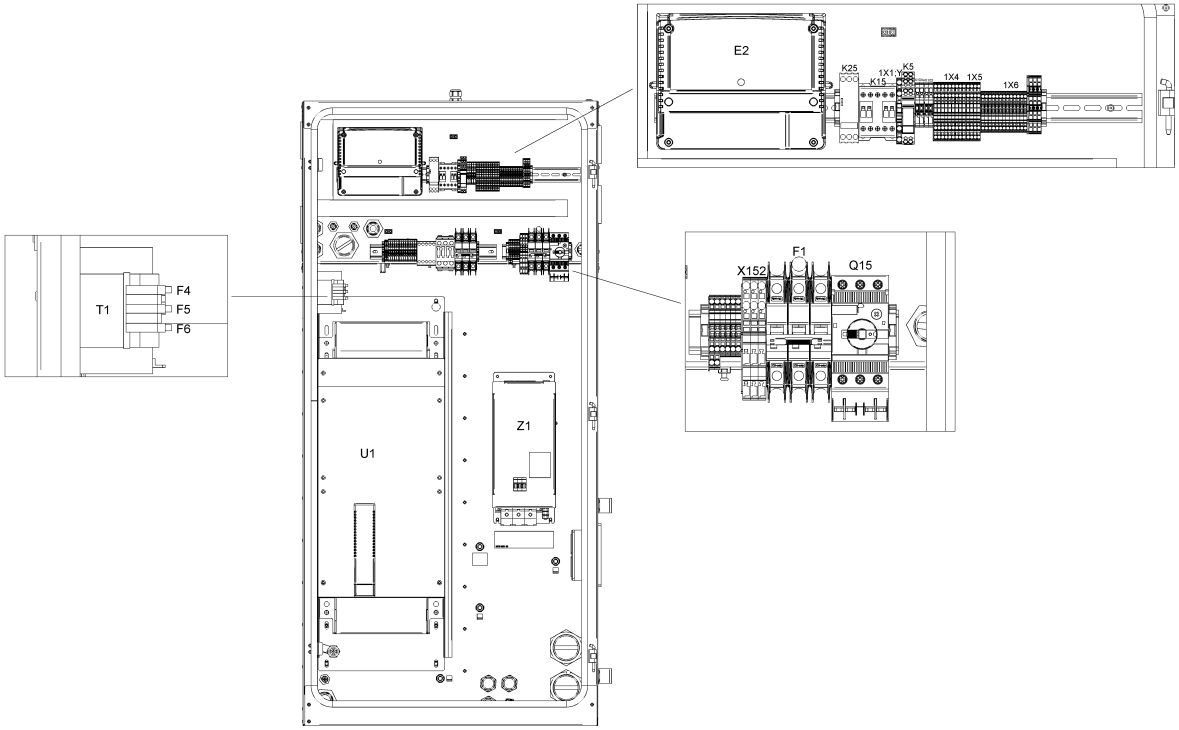
E2
K25
K15
1X1:Y
K5
1X4
1X5
1X6
T1
F4
F5
F6
U1
Z1
X152
F1
Q15

21.9 - Cubicle components GA 75L VSD+ - ((200V-400V-500V/50Hz, 460V/60Hz) - IEC, (230V-460V-575V/60Hz - UL-cUL)) - Full-Feature (12/12/2018 - 27/11/2019)

(((MOVOL:200V , MOVOL:400V , MOVOL:500V) + FREQ:50HZ , FREQ:60HZ + MOVOL:460V) + CAPPRE:IEC , (MOVOL:230V , MOVOL:460V , MOVOL:575V) + CAPPRE:ULCUL + FREQ:60HZ) + IDRY:Y + MODEL:GA75VP_16

Ref	Part Number	Qty	Name	Validity	EL
	1088 0037 82	1	CONNECTOR	**(12/12/2018 - 24/02/2019)** ((((CAPPRM:AS1210 , CAPPRM:CE , CAPPRM:MHLW , CAPPRM:MOM) + MOVOL:400V , (CAPPRM:CE + MOVOL:500V , CAPPRM:MHLW + MOVOL:200V) + COOL:AIR) + FREQ:50HZ , (CAPPRM:ASME , CAPPRM:MHLW) + FREQ:60HZ + MOVOL:460V) + CAPPRE:IEC , ((MOVOL:230V , MOVOL:575V) + COOL:AIR , MOVOL:460V) + CAPPRE:ULCUL + CAPPRM:ASME + FREQ:60HZ) **(25/02/2019 - 24/07/2019)** (((((CAPPRM:AS1210 , CAPPRM:CE , CAPPRM:MHLW , CAPPRM:MOM) + MOVOL:400V , CAPPRM:CE + MOVOL:500V , CAPPRM:MHLW + MOVOL:200V) + FREQ:50HZ , (CAPPRM:ASME , CAPPRM:MHLW) + FREQ:60HZ + MOVOL:460V) + CAPPRE:IEC , (MOVOL:230V , MOVOL:460V , MOVOL:575V) + CAPPRE:ULCUL + CAPPRM:ASME + FREQ:60HZ) + COOL:AIR , CAPPRE:IEC + CAPPRM:MHLW + COOL:WATER + FREQ:60HZ + MOVOL:460V) **(25/07/2019 - 27/11/2019)** ((((CAPPRM:AS1210 , CAPPRM:CE , CAPPRM:MHLW , CAPPRM:MOM) + MOVOL:400V , CAPPRM:CE + MOVOL:500V , CAPPRM:MHLW + MOVOL:200V) + FREQ:50HZ , (CAPPRM:ASME , CAPPRM:MHLW) + FREQ:60HZ + MOVOL:460V) + CAPPRE:IEC , (MOVOL:230V , MOVOL:460V , MOVOL:575V) + CAPPRE:ULCUL + CAPPRM:ASME + FREQ:60HZ) + COOL:AIR	3X34
	0697 9811 13	1	PLUG	**(12/12/2018 - 24/02/2019)** ((((CAPPRM:AS1210 , CAPPRM:CE , CAPPRM:MHLW , CAPPRM:MOM) + MOVOL:400V , (CAPPRM:CE + MOVOL:500V , CAPPRM:MHLW + MOVOL:200V) + COOL:AIR) + FREQ:50HZ , (CAPPRM:ASME , CAPPRM:MHLW) + FREQ:60HZ + MOVOL:460V) + CAPPRE:IEC , ((MOVOL:230V , MOVOL:575V) + COOL:AIR , MOVOL:460V) + CAPPRE:ULCUL + CAPPRM:ASME + FREQ:60HZ) **(25/02/2019 - 24/07/2019)** (((((CAPPRM:AS1210 , CAPPRM:CE , CAPPRM:MHLW , CAPPRM:MOM) + MOVOL:400V , CAPPRM:CE + MOVOL:500V , CAPPRM:MHLW + MOVOL:200V) + FREQ:50HZ , (CAPPRM:ASME , CAPPRM:MHLW) + FREQ:60HZ + MOVOL:460V) + CAPPRE:IEC , (MOVOL:230V , MOVOL:460V , MOVOL:575V) + CAPPRE:ULCUL + CAPPRM:ASME + FREQ:60HZ) + COOL:AIR , CAPPRE:IEC + CAPPRM:MHLW + COOL:WATER + FREQ:60HZ + MOVOL:460V) **(25/07/2019 - 27/11/2019)** ((((CAPPRM:AS1210 , CAPPRM:CE , CAPPRM:MHLW , CAPPRM:MOM) + MOVOL:400V , CAPPRM:CE + MOVOL:500V , CAPPRM:MHLW + MOVOL:200V) + FREQ:50HZ , (CAPPRM:ASME , CAPPRM:MHLW) + FREQ:60HZ + MOVOL:460V) + CAPPRE:IEC , (MOVOL:230V , MOVOL:460V , MOVOL:575V) + CAPPRE:ULCUL + CAPPRM:ASME + FREQ:60HZ) + COOL:AIR	

Electrical legend: Energy recovery

Legend:

CAPPRE:IEC - Component approval electrical:IEC
CAPPRE:ULCUL - Component approval electrical:UL/cUL
CAPPRM:AS1210 - Component approval mechanical:AS1210
CAPPRM:ASME - Component approval mechanical:ASME
CAPPRM:CE - Component approval mechanical:CE
CAPPRM:MHLW - Component approval mechanical:MHLW
CAPPRM:MOM - Component approval mechanical:MOM
COOL:AIR - Cooling:Air cooled
COOL:WATER - Cooling:Water cooled
FREQ:50HZ - Frequency:50 Hz
FREQ:60HZ - Frequency:60 Hz
IDRY:Y - Integrated dryer:Yes
MODEL:GA75VP_16 - Model:GA 75VSD+
MOVOL:200V - Supply voltage:200 V
MOVOL:230V - Supply voltage:230 V
MOVOL:400V - Supply voltage:400 V
MOVOL:460V - Supply voltage:460 V
MOVOL:500V - Supply voltage:500 V
MOVOL:575V - Supply voltage:575 V

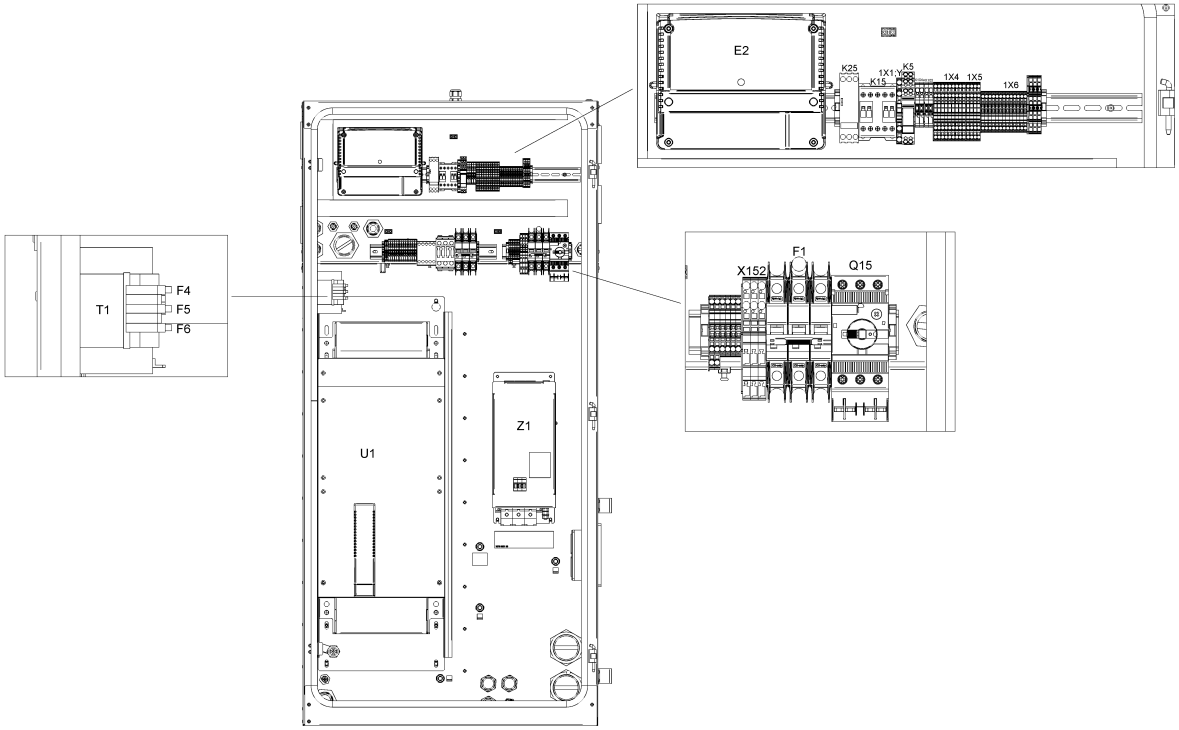
E2
K25
K15
1X1:Y
K5
1X4
1X5
1X6
T1
F4
F5
F6
U1
Z1
X152
F1
Q15

Ref	Part Number	Qty	Name	Validity	EL
	0989 3700 44	1	LOCKNUT	**(12/12/2018 - 24/02/2019)** ((((CAPPRM:AS1210 , CAPPRM:CE , CAPPRM:MHLW , CAPPRM:MOM) + MOVOL:400V , (CAPPRM:CE + MOVOL:500V , CAPPRM:MHLW + MOVOL:200V) + COOL:AIR) + FREQ:50HZ , (CAPPRM:ASME , CAPPRM:MHLW) + FREQ:60HZ + MOVOL:460V) + CAPPRE:IEC , ((MOVOL:230V , MOVOL:575V) + COOL:AIR , MOVOL:460V) + CAPPRE:ULCUL + CAPPRM:ASME + FREQ:60HZ) **(25/02/2019 - 24/07/2019)** (((((CAPPRM:AS1210 , CAPPRM:CE , CAPPRM:MHLW , CAPPRM:MOM) + MOVOL:400V , CAPPRM:CE + MOVOL:500V , CAPPRM:MHLW + MOVOL:200V) + FREQ:50HZ , (CAPPRM:ASME , CAPPRM:MHLW) + FREQ:60HZ + MOVOL:460V) + CAPPRE:IEC , (MOVOL:230V , MOVOL:460V , MOVOL:575V) + CAPPRE:ULCUL + CAPPRM:ASME + FREQ:60HZ) + COOL:AIR , CAPPRE:IEC + CAPPRM:MHLW + COOL:WATER + FREQ:60HZ + MOVOL:460V) **(25/07/2019 - 27/11/2019)** ((((CAPPRM:AS1210 , CAPPRM:CE , CAPPRM:MHLW , CAPPRM:MOM) + MOVOL:400V , CAPPRM:CE + MOVOL:500V , CAPPRM:MHLW + MOVOL:200V) + FREQ:50HZ , (CAPPRM:ASME , CAPPRM:MHLW) + FREQ:60HZ + MOVOL:460V) + CAPPRE:IEC , (MOVOL:230V , MOVOL:460V , MOVOL:575V) + CAPPRE:ULCUL + CAPPRM:ASME + FREQ:60HZ) + COOL:AIR	
	Electrical legend:	Energy recovery			
	0697 9811 12	1	PLUG	**(12/12/2018 - 24/02/2019)** ((((CAPPRM:AS1210 , CAPPRM:CE , CAPPRM:MHLW , CAPPRM:MOM) + MOVOL:400V , (CAPPRM:CE + MOVOL:500V , CAPPRM:MHLW + MOVOL:200V) + COOL:AIR) + FREQ:50HZ , (CAPPRM:ASME , CAPPRM:MHLW) + FREQ:60HZ + MOVOL:460V) + CAPPRE:IEC , ((MOVOL:230V , MOVOL:575V) + COOL:AIR , MOVOL:460V) + CAPPRE:ULCUL + CAPPRM:ASME + FREQ:60HZ) **(25/02/2019 - 24/07/2019)** (((((CAPPRM:AS1210 , CAPPRM:CE , CAPPRM:MHLW , CAPPRM:MOM) + MOVOL:400V , CAPPRM:CE + MOVOL:500V , CAPPRM:MHLW + MOVOL:200V) + FREQ:50HZ , (CAPPRM:ASME , CAPPRM:MHLW) + FREQ:60HZ + MOVOL:460V) + CAPPRE:IEC , (MOVOL:230V , MOVOL:460V , MOVOL:575V) + CAPPRE:ULCUL + CAPPRM:ASME + FREQ:60HZ) + COOL:AIR , CAPPRE:IEC + CAPPRM:MHLW + COOL:WATER + FREQ:60HZ + MOVOL:460V) **(25/07/2019 - 27/11/2019)** ((((CAPPRM:AS1210 , CAPPRM:CE , CAPPRM:MHLW , CAPPRM:MOM) + MOVOL:400V , CAPPRM:CE + MOVOL:500V , CAPPRM:MHLW + MOVOL:200V) + FREQ:50HZ , (CAPPRM:ASME , CAPPRM:MHLW) + FREQ:60HZ + MOVOL:460V) + CAPPRE:IEC , (MOVOL:230V , MOVOL:460V , MOVOL:575V) + CAPPRE:ULCUL + CAPPRM:ASME + FREQ:60HZ) + COOL:AIR	
	Electrical legend:	Control circuit of T10			

Legend:

CAPPRE:IEC - Component approval electrical:IEC
CAPPRE:ULCUL - Component approval electrical:UL/cUL
CAPPRM:AS1210 - Component approval mechanical:AS1210
CAPPRM:ASME - Component approval mechanical:ASME
CAPPRM:CE - Component approval mechanical:CE
CAPPRM:MHLW - Component approval mechanical:MHLW
CAPPRM:MOM - Component approval mechanical:MOM
COOL:AIR - Cooling:Air cooled
COOL:WATER - Cooling:Water cooled
FREQ:50HZ - Frequency:50 Hz
FREQ:60HZ - Frequency:60 Hz
IDRY:Y - Integrated dryer:Yes
MODEL:GA75VP_16 - Model:GA 75VSD+
MOVOL:200V - Supply voltage:200 V
MOVOL:230V - Supply voltage:230 V
MOVOL:400V - Supply voltage:400 V
MOVOL:460V - Supply voltage:460 V
MOVOL:500V - Supply voltage:500 V
MOVOL:575V - Supply voltage:575 V

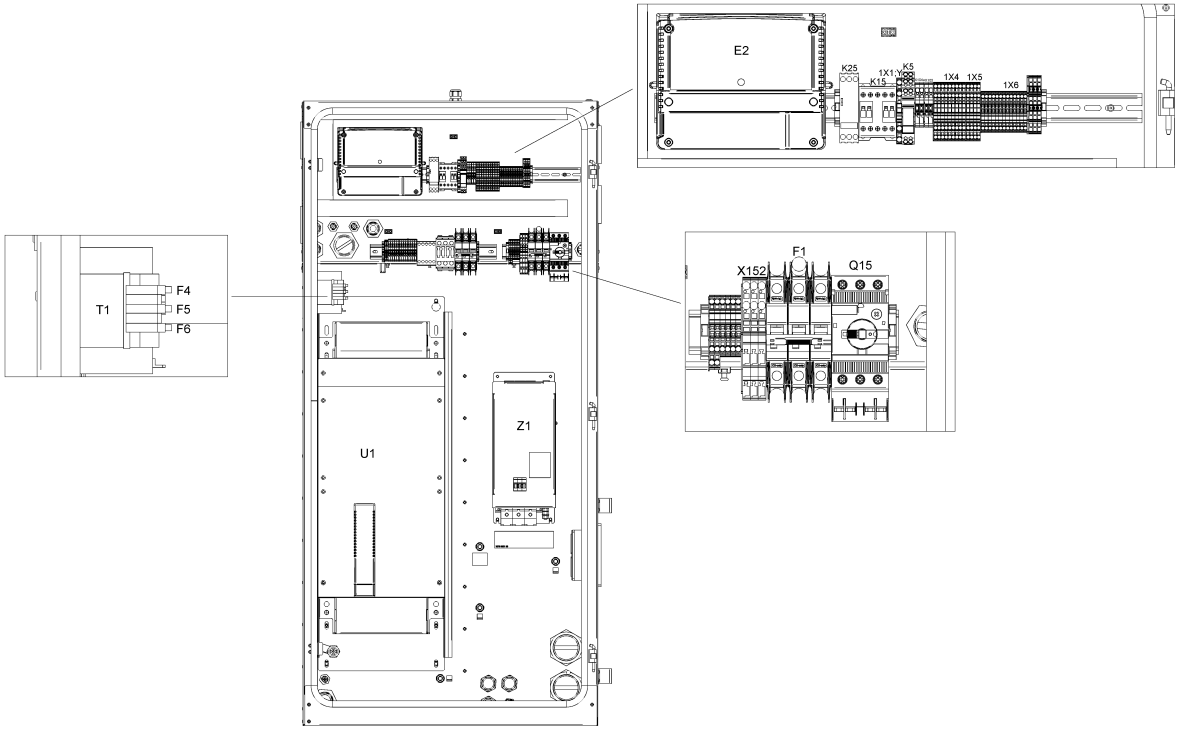
E2
K25
K15
1X1:Y
K5
1X4
1X5
1X6
T1
F4
F5
F6
U1
Z1
X152
F1
Q15

Ref	Part Number	Qty	Name	Validity	EL
	0989 3700 43	1	NUT	**(12/12/2018 - 24/02/2019)** ((((CAPPRM:AS1210 , CAPPRM:CE , CAPPRM:MHLW , CAPPRM:MOM) + MOVOL:400V , (CAPPRM:CE + MOVOL:500V , CAPPRM:MHLW + MOVOL:200V) + COOL:AIR) + FREQ:50HZ , (CAPPRM:ASME , CAPPRM:MHLW) + FREQ:60HZ + MOVOL:460V) + CAPPRE:IEC , ((MOVOL:230V , MOVOL:575V) + COOL:AIR , MOVOL:460V) + CAPPRE:ULCUL + CAPPRM:ASME + FREQ:60HZ) **(25/02/2019 - 24/07/2019)** (((((CAPPRM:AS1210 , CAPPRM:CE , CAPPRM:MHLW , CAPPRM:MOM) + MOVOL:400V , CAPPRM:CE + MOVOL:500V , CAPPRM:MHLW + MOVOL:200V) + FREQ:50HZ , (CAPPRM:ASME , CAPPRM:MHLW) + FREQ:60HZ + MOVOL:460V) + CAPPRE:IEC , (MOVOL:230V , MOVOL:460V , MOVOL:575V) + CAPPRE:ULCUL + CAPPRM:ASME + FREQ:60HZ) + COOL:AIR , CAPPRE:IEC + CAPPRM:MHLW + COOL:WATER + FREQ:60HZ + MOVOL:460V) **(25/07/2019 - 27/11/2019)** ((((CAPPRM:AS1210 , CAPPRM:CE , CAPPRM:MHLW , CAPPRM:MOM) + MOVOL:400V , CAPPRM:CE + MOVOL:500V , CAPPRM:MHLW + MOVOL:200V) + FREQ:50HZ , (CAPPRM:ASME , CAPPRM:MHLW) + FREQ:60HZ + MOVOL:460V) + CAPPRE:IEC , (MOVOL:230V , MOVOL:460V , MOVOL:575V) + CAPPRE:ULCUL + CAPPRM:ASME + FREQ:60HZ) + COOL:AIR	
	Electrical legend:	Control circuit of T10			
	0697 9811 10	1	PLUG	**(12/12/2018 - 24/02/2019)** ((((CAPPRM:AS1210 , CAPPRM:CE , CAPPRM:MHLW , CAPPRM:MOM) + MOVOL:400V , (CAPPRM:CE + MOVOL:500V , CAPPRM:MHLW + MOVOL:200V) + COOL:AIR) + FREQ:50HZ , (CAPPRM:ASME , CAPPRM:MHLW) + FREQ:60HZ + MOVOL:460V) + CAPPRE:IEC , ((MOVOL:230V , MOVOL:575V) + COOL:AIR , MOVOL:460V) + CAPPRE:ULCUL + CAPPRM:ASME + FREQ:60HZ) **(25/02/2019 - 24/07/2019)** (((((CAPPRM:AS1210 , CAPPRM:CE , CAPPRM:MHLW , CAPPRM:MOM) + MOVOL:400V , CAPPRM:CE + MOVOL:500V , CAPPRM:MHLW + MOVOL:200V) + FREQ:50HZ , (CAPPRM:ASME , CAPPRM:MHLW) + FREQ:60HZ + MOVOL:460V) + CAPPRE:IEC , (MOVOL:230V , MOVOL:460V , MOVOL:575V) + CAPPRE:ULCUL + CAPPRM:ASME + FREQ:60HZ) + COOL:AIR , CAPPRE:IEC + CAPPRM:MHLW + COOL:WATER + FREQ:60HZ + MOVOL:460V) **(25/07/2019 - 27/11/2019)** ((((CAPPRM:AS1210 , CAPPRM:CE , CAPPRM:MHLW , CAPPRM:MOM) + MOVOL:400V , CAPPRM:CE + MOVOL:500V , CAPPRM:MHLW + MOVOL:200V) + FREQ:50HZ , (CAPPRM:ASME , CAPPRM:MHLW) + FREQ:60HZ + MOVOL:460V) + CAPPRE:IEC , (MOVOL:230V , MOVOL:460V , MOVOL:575V) + CAPPRE:ULCUL + CAPPRM:ASME + FREQ:60HZ) + COOL:AIR	
	Electrical legend:	Plug for smartbox hole			

Legend:

CAPPRE:IEC - Component approval electrical:IEC
CAPPRE:ULCUL - Component approval electrical:UL/cUL
CAPPRM:AS1210 - Component approval mechanical:AS1210
CAPPRM:ASME - Component approval mechanical:ASME
CAPPRM:CE - Component approval mechanical:CE
CAPPRM:MHLW - Component approval mechanical:MHLW
CAPPRM:MOM - Component approval mechanical:MOM
COOL:AIR - Cooling:Air cooled
COOL:WATER - Cooling:Water cooled
FREQ:50HZ - Frequency:50 Hz
FREQ:60HZ - Frequency:60 Hz
IDRY:Y - Integrated dryer:Yes
MODEL:GA75VP_16 - Model:GA 75VSD+
MOVOL:200V - Supply voltage:200 V
MOVOL:230V - Supply voltage:230 V
MOVOL:400V - Supply voltage:400 V
MOVOL:460V - Supply voltage:460 V
MOVOL:500V - Supply voltage:500 V
MOVOL:575V - Supply voltage:575 V

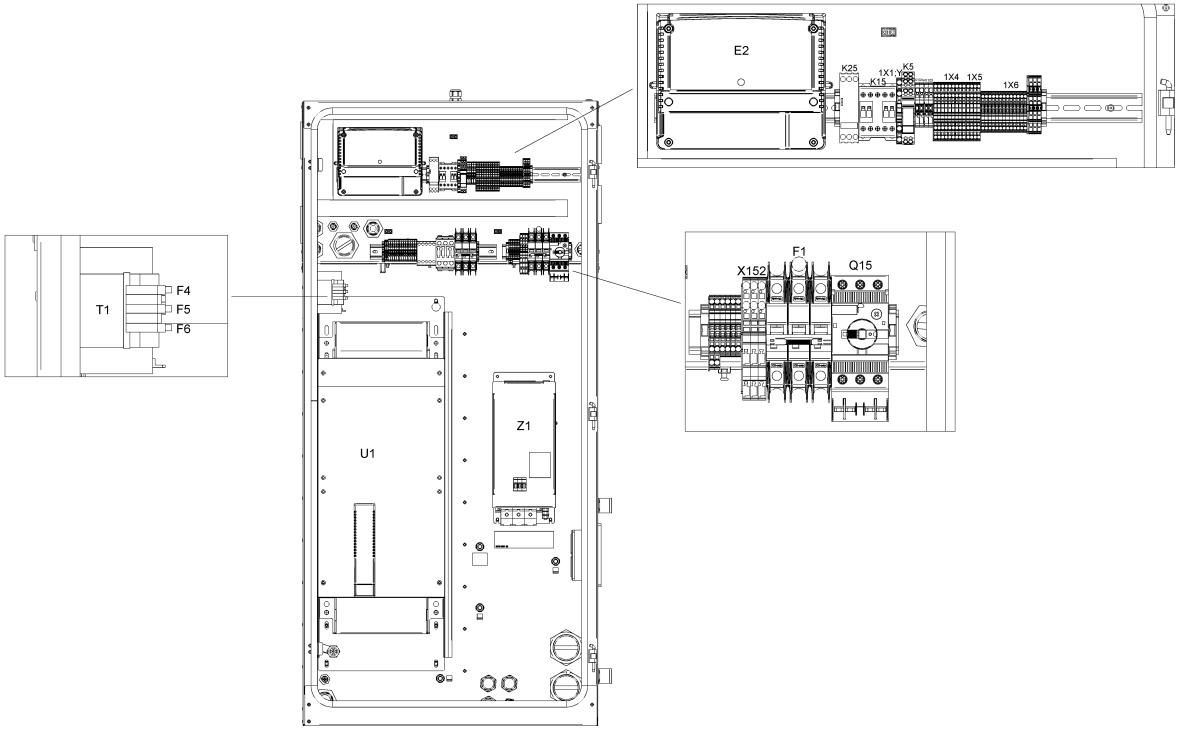
E2
K25
K15
1X1:Y
K5
1X4
1X5
1X6
T1
F4
F5
F6
U1
Z1
X152
F1
Q15

Ref	Part Number	Qty	Name	Validity	EL
	0989 3700 41	1	LOCKNUT	**(12/12/2018 - 24/02/2019)** ((((CAPPRM:AS1210 , CAPPRM:CE , CAPPRM:MHLW , CAPPRM:MOM) + MOVOL:400V , (CAPPRM:CE + MOVOL:500V , CAPPRM:MHLW + MOVOL:200V) + COOL:AIR) + FREQ:50HZ , (CAPPRM:ASME , CAPPRM:MHLW) + FREQ:60HZ + MOVOL:460V) + CAPPRE:IEC , ((MOVOL:230V , MOVOL:575V) + COOL:AIR , MOVOL:460V) + CAPPRE:ULCUL + CAPPRM:ASME + FREQ:60HZ) **(25/02/2019 - 24/07/2019)** (((((CAPPRM:AS1210 , CAPPRM:CE , CAPPRM:MHLW , CAPPRM:MOM) + MOVOL:400V , CAPPRM:CE + MOVOL:500V , CAPPRM:MHLW + MOVOL:200V) + FREQ:50HZ , (CAPPRM:ASME , CAPPRM:MHLW) + FREQ:60HZ + MOVOL:460V) + CAPPRE:IEC , (MOVOL:230V , MOVOL:460V , MOVOL:575V) + CAPPRE:ULCUL + CAPPRM:ASME + FREQ:60HZ) + COOL:AIR , CAPPRE:IEC + CAPPRM:MHLW + COOL:WATER + FREQ:60HZ + MOVOL:460V) **(25/07/2019 - 27/11/2019)** ((((CAPPRM:AS1210 , CAPPRM:CE , CAPPRM:MHLW , CAPPRM:MOM) + MOVOL:400V , CAPPRM:CE + MOVOL:500V , CAPPRM:MHLW + MOVOL:200V) + FREQ:50HZ , (CAPPRM:ASME , CAPPRM:MHLW) + FREQ:60HZ + MOVOL:460V) + CAPPRE:IEC , (MOVOL:230V , MOVOL:460V , MOVOL:575V) + CAPPRE:ULCUL + CAPPRM:ASME + FREQ:60HZ) + COOL:AIR	

Electrical legend: Nut for smartbox hole

Legend:

CAPPRE:IEC - Component approval electrical:IEC
CAPPRE:ULCUL - Component approval electrical:UL/cUL
CAPPRM:AS1210 - Component approval mechanical:AS1210
CAPPRM:ASME - Component approval mechanical:ASME
CAPPRM:CE - Component approval mechanical:CE
CAPPRM:MHLW - Component approval mechanical:MHLW
CAPPRM:MOM - Component approval mechanical:MOM
COOL:AIR - Cooling:Air cooled
COOL:WATER - Cooling:Water cooled
FREQ:50HZ - Frequency:50 Hz
FREQ:60HZ - Frequency:60 Hz
IDRY:Y - Integrated dryer:Yes
MODEL:GA75VP_16 - Model:GA 75VSD+
MOVOL:200V - Supply voltage:200 V
MOVOL:230V - Supply voltage:230 V
MOVOL:400V - Supply voltage:400 V
MOVOL:460V - Supply voltage:460 V
MOVOL:500V - Supply voltage:500 V
MOVOL:575V - Supply voltage:575 V

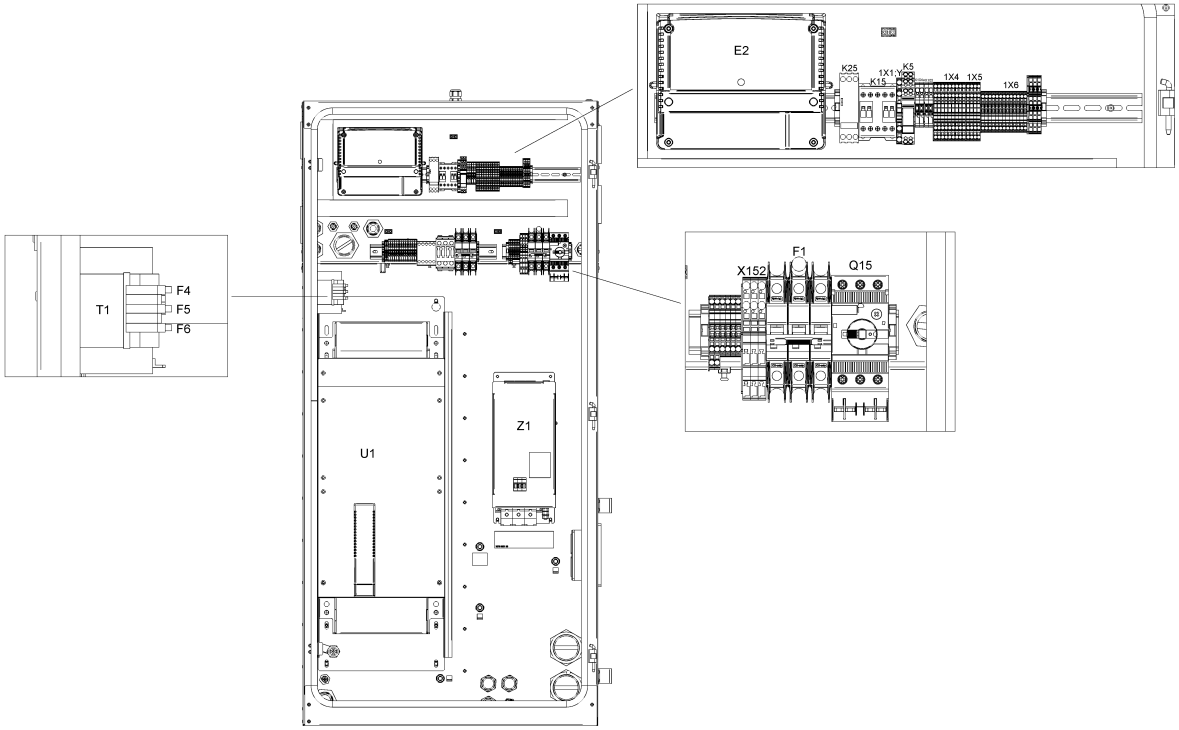
E2
K25
K15
1X1:Y
K5
1X4
1X5
1X6
T1
F4
F5
F6
U1
Z1
X152
F1
Q15

21.10 - Cubicle components GA 75L VSD+ - ((200V-400V-500V/50Hz, 460V/60Hz) - IEC, (230V-460V-575V/60Hz - UL-cUL)) - Full-Feature (28/11/2019 - ...)

(((MOVOL:200V , MOVOL:400V , MOVOL:500V) + FREQ:50HZ , FREQ:60HZ + MOVOL:460V) + CAPPRE:IEC , (MOVOL:230V , MOVOL:460V , MOVOL:575V) + CAPPRE:ULCUL + FREQ:60HZ) + IDRY:Y + MODEL:GA75VP_16

Ref	Part Number	Qty	Name	Validity	EL
	1900 2202 43	1	CUBICLE	**(28/11/2019 - ...)**	
	9820 3000 31	1	ASSEMBLY DRAWING	**(25/02/2019 - 24/07/2019)** (((CAPPRM:AS1210 , CAPPRM:CE , CAPPRM:MHLW , CAPPRM:MOM) + FREQ:50HZ + MOVOL:400V , (MOVOL:380V , MOVOL:460V) + CAPPRM:ASME + FREQ:60HZ) + CAPPRE:IEC , CAPPRE:ULCUL + CAPPRM:ASME + FREQ:60HZ + MOVOL:460V) + COOL:WATER **(25/07/2019 - 27/11/2019)** ((((MOVOL:380V , MOVOL:460V) + CAPPRM:ASME , CAPPRM:MHLW + MOVOL:460V) + FREQ:60HZ , (CAPPRM:AS1210 , CAPPRM:CE , CAPPRM:MHLW , CAPPRM:MOM) + FREQ:50HZ + MOVOL:400V) + CAPPRE:IEC , CAPPRE:ULCUL + CAPPRM:ASME + FREQ:60HZ + MOVOL:460V) + COOL:WATER **(28/11/2019 - ...)** ((((CAPPRM:AS1210 , CAPPRM:CE , CAPPRM:MHLW , CAPPRM:MOM) + MOVOL:400V , (CAPPRM:CE + MOVOL:500V , CAPPRM:MHLW + MOVOL:200V) + COOL:AIR) + FREQ:50HZ , ((CAPPRM:ASME , CAPPRM:MHLW) + MOVOL:460V , CAPPRM:ASME + COOL:WATER + MOVOL:380V) + FREQ:60HZ) + CAPPRE:IEC , ((MOVOL:230V , MOVOL:575V) + COOL:AIR , MOVOL:460V) + CAPPRE:ULCUL + CAPPRM:ASME + FREQ:60HZ)	AD
	9820 3000 27	1	SERVICE DIAGRAM	**(25/02/2019 - 24/07/2019)** (((CAPPRM:AS1210 , CAPPRM:CE , CAPPRM:MHLW , CAPPRM:MOM) + FREQ:50HZ + MOVOL:400V , (MOVOL:380V , MOVOL:460V) + CAPPRM:ASME + FREQ:60HZ) + CAPPRE:IEC , CAPPRE:ULCUL + CAPPRM:ASME + FREQ:60HZ + MOVOL:460V) + COOL:WATER **(25/07/2019 - 27/11/2019)** ((((MOVOL:380V , MOVOL:460V) + CAPPRM:ASME , CAPPRM:MHLW + MOVOL:460V) + FREQ:60HZ , (CAPPRM:AS1210 , CAPPRM:CE , CAPPRM:MHLW , CAPPRM:MOM) + FREQ:50HZ + MOVOL:400V) + CAPPRE:IEC , CAPPRE:ULCUL + CAPPRM:ASME + FREQ:60HZ + MOVOL:460V) + COOL:WATER **(28/11/2019 - ...)** ((((CAPPRM:AS1210 , CAPPRM:CE , CAPPRM:MHLW , CAPPRM:MOM) + MOVOL:400V , (CAPPRM:CE + MOVOL:500V , CAPPRM:MHLW + MOVOL:200V) + COOL:AIR) + FREQ:50HZ , ((CAPPRM:ASME , CAPPRM:MHLW) + MOVOL:460V , CAPPRM:ASME + COOL:WATER + MOVOL:380V) + FREQ:60HZ) + CAPPRE:IEC , ((MOVOL:230V , MOVOL:575V) + COOL:AIR , MOVOL:460V) + CAPPRE:ULCUL + CAPPRM:ASME + FREQ:60HZ)	SD

Legend:

CAPPRE:IEC - Component approval electrical:IEC
CAPPRE:ULCUL - Component approval electrical:UL/cUL
CAPPRM:AS1210 - Component approval mechanical:AS1210
CAPPRM:ASME - Component approval mechanical:ASME
CAPPRM:CE - Component approval mechanical:CE
CAPPRM:MHLW - Component approval mechanical:MHLW
CAPPRM:MOM - Component approval mechanical:MOM
COOL:AIR - Cooling:Air cooled
COOL:WATER - Cooling:Water cooled
FREQ:50HZ - Frequency:50 Hz
FREQ:60HZ - Frequency:60 Hz
IDRY:Y - Integrated dryer:Yes
MODEL:GA75VP_16 - Model:GA 75VSD+
MOVOL:200V - Supply voltage:200 V
MOVOL:230V - Supply voltage:230 V
MOVOL:380V - Supply voltage:380 V
MOVOL:400V - Supply voltage:400 V
MOVOL:460V - Supply voltage:460 V
MOVOL:500V - Supply voltage:500 V
MOVOL:575V - Supply voltage:575 V

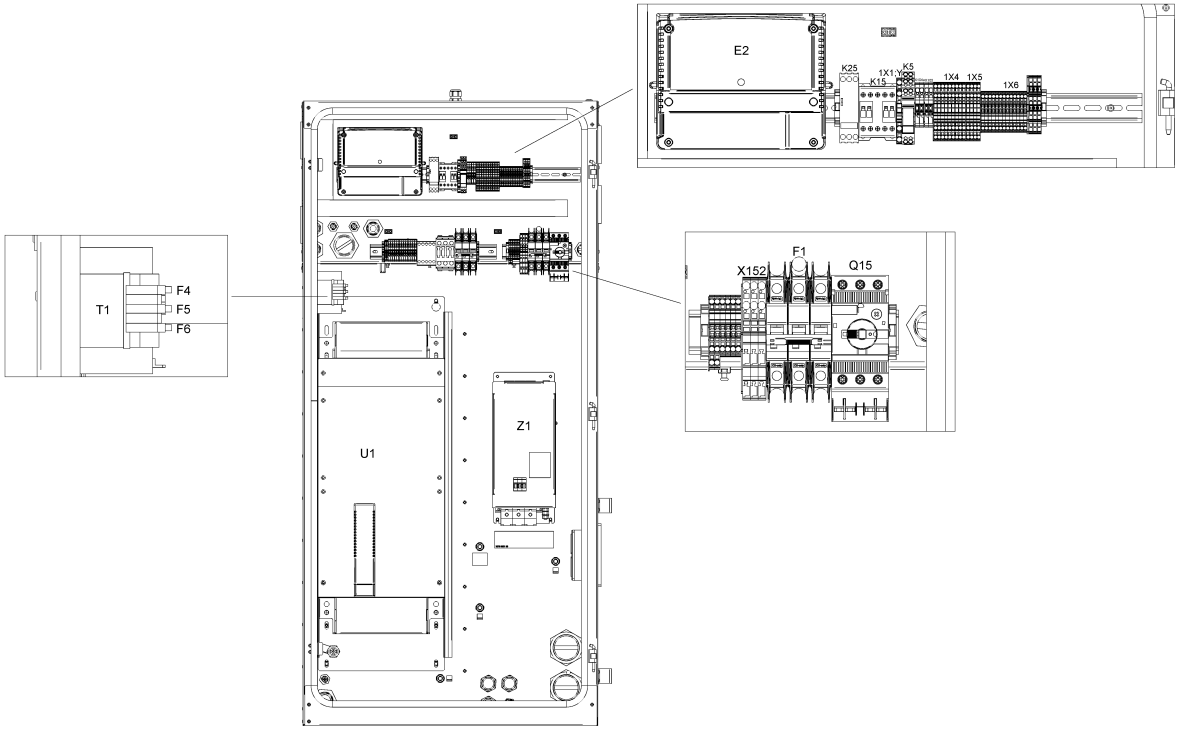
E2
K25
K15
1X1:Y
K5
1X4
1X5
1X6
T1
F4
F5
F6
U1
Z1
X152
F1
Q15

21.10 - Cubicle components GA 75L VSD+ - ((200V-400V-500V/50Hz, 460V/60Hz) - IEC, (230V-460V-575V/60Hz - UL-cUL)) - Full-Feature (28/11/2019 - ...)

(((MOVOL:200V , MOVOL:400V , MOVOL:500V) + FREQ:50HZ , FREQ:60HZ + MOVOL:460V) + CAPPRE:IEC , (MOVOL:230V , MOVOL:460V , MOVOL:575V) + CAPPRE:ULCUL + FREQ:60HZ) + IDRY:Y + MODEL:GA75VP_16

Ref	Part Number	Qty	Name	Validity	EL
	1622 3798 72	1	WIRE HARNESS	**(25/02/2019 - 24/07/2019)** (((CAPPRM:AS1210 , CAPPRM:CE , CAPPRM:MHLW , CAPPRM:MOM) + FREQ:50HZ + MOVOL:400V , (MOVOL:380V , MOVOL:460V) + CAPPRM:ASME + FREQ:60HZ) + CAPPRE:IEC , CAPPRE:ULCUL + CAPPRM:ASME + FREQ:60HZ + MOVOL:460V) + COOL:WATER **(25/07/2019 - 27/11/2019)** ((((MOVOL:380V , MOVOL:460V) + CAPPRM:ASME , CAPPRM:MHLW + MOVOL:460V) + FREQ:60HZ , (CAPPRM:AS1210 , CAPPRM:CE , CAPPRM:MHLW , CAPPRM:MOM) + FREQ:50HZ + MOVOL:400V) + CAPPRE:IEC , CAPPRE:ULCUL + CAPPRM:ASME + FREQ:60HZ + MOVOL:460V) + COOL:WATER **(28/11/2019 - ...)** ((((CAPPRM:AS1210 , CAPPRM:CE , CAPPRM:MHLW , CAPPRM:MOM) + MOVOL:400V , (CAPPRM:CE + MOVOL:500V , CAPPRM:MHLW + MOVOL:200V) + COOL:AIR) + FREQ:50HZ , ((CAPPRM:ASME , CAPPRM:MHLW) + MOVOL:460V , CAPPRM:ASME + COOL:WATER + MOVOL:380V) + FREQ:60HZ) + CAPPRE:IEC , ((MOVOL:230V , MOVOL:575V) + COOL:AIR , MOVOL:460V) + CAPPRE:ULCUL + CAPPRM:ASME + FREQ:60HZ)	Comm Cable
	1622 5099 04	1	DI CHANE CABLE (1400MM)	**(25/02/2019 - 24/07/2019)** (((CAPPRM:AS1210 , CAPPRM:CE , CAPPRM:MHLW , CAPPRM:MOM) + FREQ:50HZ + MOVOL:400V , (MOVOL:380V , MOVOL:460V) + CAPPRM:ASME + FREQ:60HZ) + CAPPRE:IEC , CAPPRE:ULCUL + CAPPRM:ASME + FREQ:60HZ + MOVOL:460V) + COOL:WATER **(25/07/2019 - 27/11/2019)** ((((MOVOL:380V , MOVOL:460V) + CAPPRM:ASME , CAPPRM:MHLW + MOVOL:460V) + FREQ:60HZ , (CAPPRM:AS1210 , CAPPRM:CE , CAPPRM:MHLW , CAPPRM:MOM) + FREQ:50HZ + MOVOL:400V) + CAPPRE:IEC , CAPPRE:ULCUL + CAPPRM:ASME + FREQ:60HZ + MOVOL:460V) + COOL:WATER **(28/11/2019 - ...)** ((((CAPPRM:AS1210 , CAPPRM:CE , CAPPRM:MHLW , CAPPRM:MOM) + MOVOL:400V , (CAPPRM:CE + MOVOL:500V , CAPPRM:MHLW + MOVOL:200V) + COOL:AIR) + FREQ:50HZ , ((CAPPRM:ASME , CAPPRM:MHLW) + MOVOL:460V , CAPPRM:ASME + COOL:WATER + MOVOL:380V) + FREQ:60HZ) + CAPPRE:IEC , ((MOVOL:230V , MOVOL:575V) + COOL:AIR , MOVOL:460V) + CAPPRE:ULCUL + CAPPRM:ASME + FREQ:60HZ)	

Electrical legend: Comm Cable Loose supply

Legend:

CAPPRE:IEC - Component approval electrical:IEC
CAPPRE:ULCUL - Component approval electrical:UL/cUL
CAPPRM:AS1210 - Component approval mechanical:AS1210
CAPPRM:ASME - Component approval mechanical:ASME
CAPPRM:CE - Component approval mechanical:CE
CAPPRM:MHLW - Component approval mechanical:MHLW
CAPPRM:MOM - Component approval mechanical:MOM
COOL:AIR - Cooling:Air cooled
COOL:WATER - Cooling:Water cooled
FREQ:50HZ - Frequency:50 Hz
FREQ:60HZ - Frequency:60 Hz
IDRY:Y - Integrated dryer:Yes
MODEL:GA75VP_16 - Model:GA 75VSD+
MOVOL:200V - Supply voltage:200 V
MOVOL:230V - Supply voltage:230 V
MOVOL:380V - Supply voltage:380 V
MOVOL:400V - Supply voltage:400 V
MOVOL:460V - Supply voltage:460 V
MOVOL:500V - Supply voltage:500 V
MOVOL:575V - Supply voltage:575 V

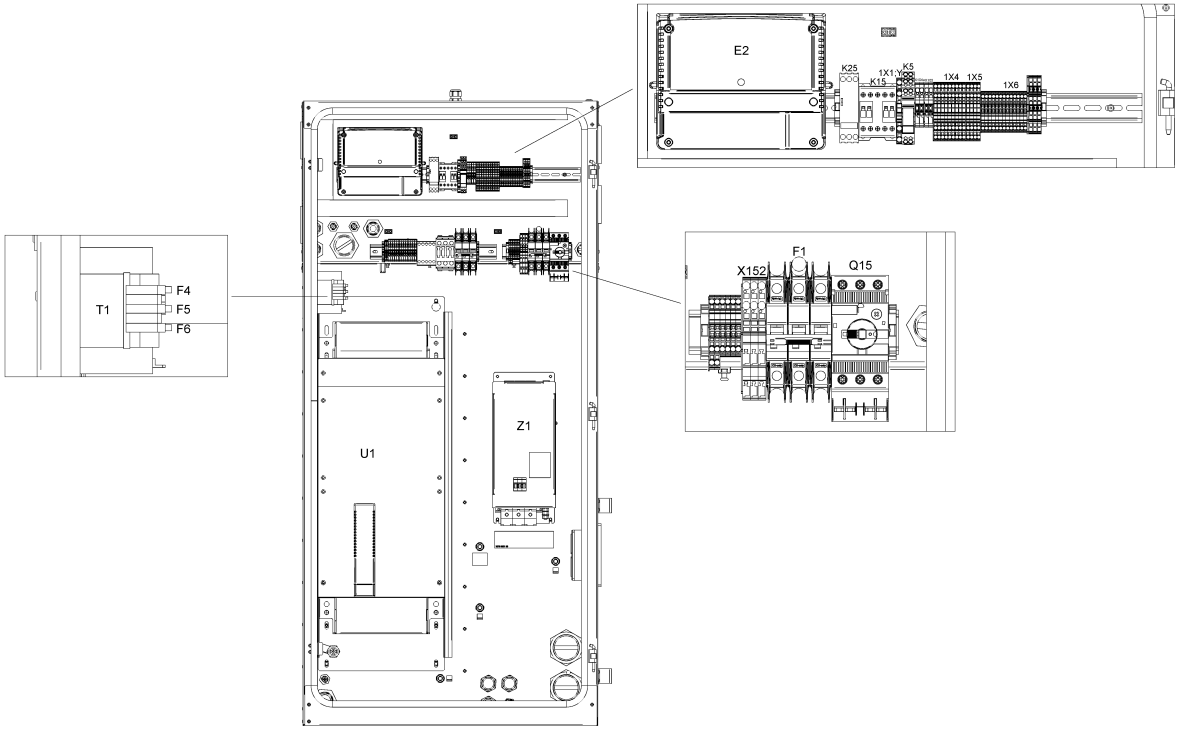
E2
K25
K15
1X1:Y
K5
1X4
1X5
1X6
T1
F4
F5
F6
U1
Z1
X152
F1
Q15

21.10 - Cubicle components GA 75L VSD+ - ((200V-400V-500V/50Hz, 460V/60Hz) - IEC, (230V-460V-575V/60Hz - UL-cUL)) - Full-Feature (28/11/2019 - ...)

(((MOVOL:200V , MOVOL:400V , MOVOL:500V) + FREQ:50HZ , FREQ:60HZ + MOVOL:460V) + CAPPRE:IEC , (MOVOL:230V , MOVOL:460V , MOVOL:575V) + CAPPRE:ULCUL + FREQ:60HZ) + IDRY:Y + MODEL:GA75VP_16

Ref	Part Number	Qty	Name	Validity	EL
	1649 8006 00	1	CUBICLE	**(25/02/2019 - 24/07/2019)** (((CAPPRM:AS1210 , CAPPRM:CE , CAPPRM:MHLW , CAPPRM:MOM) + FREQ:50HZ + MOVOL:400V , (MOVOL:380V , MOVOL:460V) + CAPPRM:ASME + FREQ:60HZ) + CAPPRE:IEC , CAPPRE:ULCUL + CAPPRM:ASME + FREQ:60HZ + MOVOL:460V) + COOL:WATER **(25/07/2019 - 27/11/2019)** ((((MOVOL:380V , MOVOL:460V) + CAPPRM:ASME , CAPPRM:MHLW + MOVOL:460V) + FREQ:60HZ , (CAPPRM:AS1210 , CAPPRM:CE , CAPPRM:MHLW , CAPPRM:MOM) + FREQ:50HZ + MOVOL:400V) + CAPPRE:IEC , CAPPRE:ULCUL + CAPPRM:ASME + FREQ:60HZ + MOVOL:460V) + COOL:WATER **(28/11/2019 - ...)** ((((CAPPRM:AS1210 , CAPPRM:CE , CAPPRM:MHLW , CAPPRM:MOM) + MOVOL:400V , (CAPPRM:CE + MOVOL:500V , CAPPRM:MHLW + MOVOL:200V) + COOL:AIR) + FREQ:50HZ , ((CAPPRM:ASME , CAPPRM:MHLW) + MOVOL:460V , CAPPRM:ASME + COOL:WATER + MOVOL:380V) + FREQ:60HZ) + CAPPRE:IEC , ((MOVOL:230V , MOVOL:575V) + COOL:AIR , MOVOL:460V) + CAPPRE:ULCUL + CAPPRM:ASME + FREQ:60HZ)	MSA
	1649 8001 32	1	PLATE NEOS "D"	**(25/02/2019 - 24/07/2019)** (((CAPPRM:AS1210 , CAPPRM:CE , CAPPRM:MHLW , CAPPRM:MOM) + FREQ:50HZ + MOVOL:400V , (MOVOL:380V , MOVOL:460V) + CAPPRM:ASME + FREQ:60HZ) + CAPPRE:IEC , CAPPRE:ULCUL + CAPPRM:ASME + FREQ:60HZ + MOVOL:460V) + COOL:WATER **(25/07/2019 - 27/11/2019)** ((((MOVOL:380V , MOVOL:460V) + CAPPRM:ASME , CAPPRM:MHLW + MOVOL:460V) + FREQ:60HZ , (CAPPRM:AS1210 , CAPPRM:CE , CAPPRM:MHLW , CAPPRM:MOM) + FREQ:50HZ + MOVOL:400V) + CAPPRE:IEC , CAPPRE:ULCUL + CAPPRM:ASME + FREQ:60HZ + MOVOL:460V) + COOL:WATER **(28/11/2019 - ...)** ((((CAPPRM:AS1210 , CAPPRM:CE , CAPPRM:MHLW , CAPPRM:MOM) + MOVOL:400V , (CAPPRM:CE + MOVOL:500V , CAPPRM:MHLW + MOVOL:200V) + COOL:AIR) + FREQ:50HZ , ((CAPPRM:ASME , CAPPRM:MHLW) + MOVOL:460V , CAPPRM:ASME + COOL:WATER + MOVOL:380V) + FREQ:60HZ) + CAPPRE:IEC , ((MOVOL:230V , MOVOL:575V) + COOL:AIR , MOVOL:460V) + CAPPRE:ULCUL + CAPPRM:ASME + FREQ:60HZ)	

Electrical legend: Mounting plate

Legend:

CAPPRE:IEC - Component approval electrical:IEC
CAPPRM:ASME - Component approval mechanical:ASME
CAPPRM:MOM - Component approval mechanical:MOM
FREQ:50HZ - Frequency:50 Hz
MODEL:GA75VP_16 - Model:GA 75VSD+
MOVOL:380V - Supply voltage:380 V
MOVOL:500V - Supply voltage:500 V
CAPPRE:ULCUL - Component approval electrical:UL/cUL
CAPPRM:CE - Component approval mechanical:CE
COOL:AIR - Cooling:Air cooled
FREQ:60HZ - Frequency:60 Hz
MOVOL:200V - Supply voltage:200 V
MOVOL:400V - Supply voltage:400 V
MOVOL:575V - Supply voltage:575 V
CAPPRM:AS1210 - Component approval mechanical:AS1210
CAPPRM:MHLW - Component approval mechanical:MHLW
COOL:WATER - Cooling:Water cooled
IDRY:Y - Integrated dryer:Yes
MOVOL:230V - Supply voltage:230 V
MOVOL:460V - Supply voltage:460 V

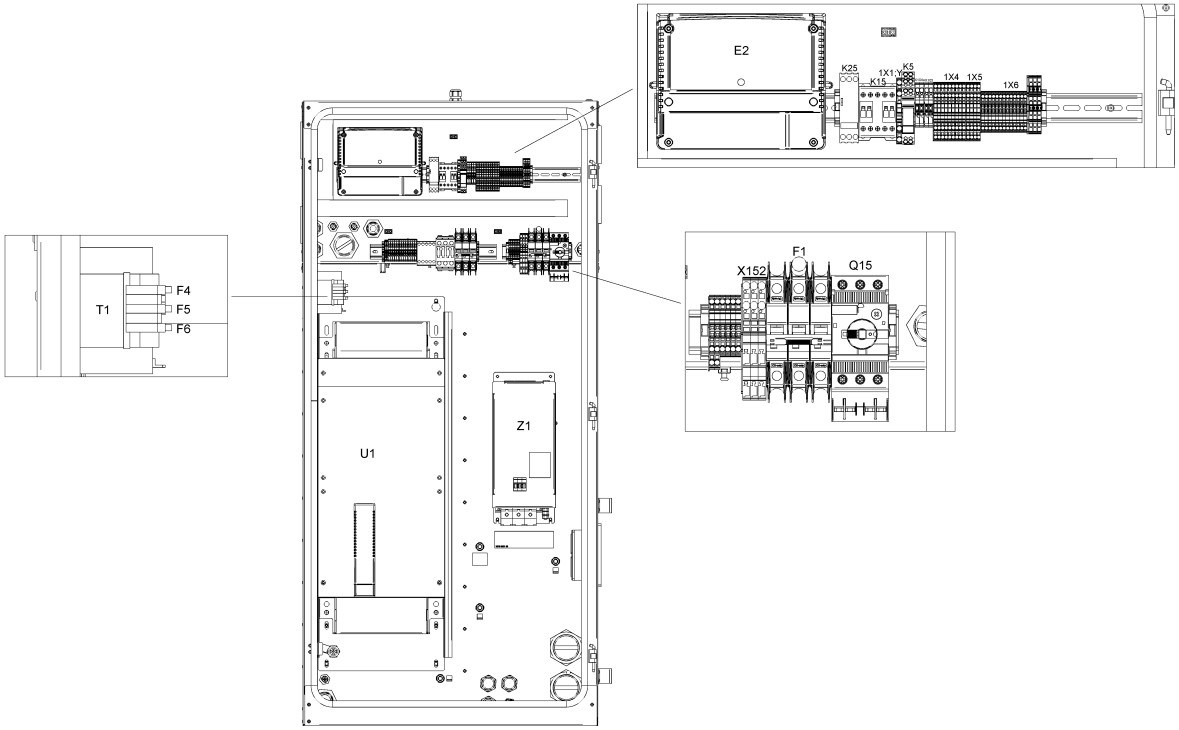
E2
K25
K15
1X1:Y
K5
1X4
1X5
1X6
T1
F4
F5
F6
U1
Z1
X152
F1
Q15

21.10 - Cubicle components GA 75L VSD+ - ((200V-400V-500V/50Hz, 460V/60Hz) - IEC, (230V-460V-575V/60Hz - UL-cUL)) - Full-Feature (28/11/2019 - ...)

(((MOVOL:200V , MOVOL:400V , MOVOL:500V) + FREQ:50HZ , FREQ:60HZ + MOVOL:460V) + CAPPRE:IEC , (MOVOL:230V , MOVOL:460V , MOVOL:575V) + CAPPRE:ULCUL + FREQ:60HZ) + IDRY:Y + MODEL:GA75VP_16

Ref	Part Number	Qty	Name	Validity	EL
	1649 8003 85	1	MOUNTING PLATE	**(25/02/2019 - 24/07/2019)** (((CAPPRM:AS1210 , CAPPRM:CE , CAPPRM:MHLW , CAPPRM:MOM) + FREQ:50HZ + MOVOL:400V , (MOVOL:380V , MOVOL:460V) + CAPPRM:ASME + FREQ:60HZ) + CAPPRE:IEC , CAPPRE:ULCUL + CAPPRM:ASME + FREQ:60HZ + MOVOL:460V) + COOL:WATER **(25/07/2019 - 27/11/2019)** ((((MOVOL:380V , MOVOL:460V) + CAPPRM:ASME , CAPPRM:MHLW + MOVOL:460V) + FREQ:60HZ , (CAPPRM:AS1210 , CAPPRM:CE , CAPPRM:MHLW , CAPPRM:MOM) + FREQ:50HZ + MOVOL:400V) + CAPPRE:IEC , CAPPRE:ULCUL + CAPPRM:ASME + FREQ:60HZ + MOVOL:460V) + COOL:WATER **(28/11/2019 - ...)** ((((CAPPRM:AS1210 , CAPPRM:CE , CAPPRM:MHLW , CAPPRM:MOM) + MOVOL:400V , (CAPPRM:CE + MOVOL:500V , CAPPRM:MHLW + MOVOL:200V) + COOL:AIR) + FREQ:50HZ , ((CAPPRM:ASME , CAPPRM:MHLW) + MOVOL:460V , CAPPRM:ASME + COOL:WATER + MOVOL:380V) + FREQ:60HZ) + CAPPRE:IEC , ((MOVOL:230V , MOVOL:575V) + COOL:AIR , MOVOL:460V) + CAPPRE:ULCUL + CAPPRM:ASME + FREQ:60HZ)	
	Electrical legend:	Mounting plate			
	1649 8002 39	1	WIRE HARNESS	**(25/02/2019 - 24/07/2019)** (((CAPPRM:AS1210 , CAPPRM:CE , CAPPRM:MHLW , CAPPRM:MOM) + FREQ:50HZ + MOVOL:400V , (MOVOL:380V , MOVOL:460V) + CAPPRM:ASME + FREQ:60HZ) + CAPPRE:IEC , CAPPRE:ULCUL + CAPPRM:ASME + FREQ:60HZ + MOVOL:460V) + COOL:WATER **(25/07/2019 - 27/11/2019)** ((((MOVOL:380V , MOVOL:460V) + CAPPRM:ASME , CAPPRM:MHLW + MOVOL:460V) + FREQ:60HZ , (CAPPRM:AS1210 , CAPPRM:CE , CAPPRM:MHLW , CAPPRM:MOM) + FREQ:50HZ + MOVOL:400V) + CAPPRE:IEC , CAPPRE:ULCUL + CAPPRM:ASME + FREQ:60HZ + MOVOL:460V) + COOL:WATER **(28/11/2019 - ...)** ((((CAPPRM:AS1210 , CAPPRM:CE , CAPPRM:MHLW , CAPPRM:MOM) + MOVOL:400V , (CAPPRM:CE + MOVOL:500V , CAPPRM:MHLW + MOVOL:200V) + COOL:AIR) + FREQ:50HZ , ((CAPPRM:ASME , CAPPRM:MHLW) + MOVOL:460V , CAPPRM:ASME + COOL:WATER + MOVOL:380V) + FREQ:60HZ) + CAPPRE:IEC , ((MOVOL:230V , MOVOL:575V) + COOL:AIR , MOVOL:460V) + CAPPRE:ULCUL + CAPPRM:ASME + FREQ:60HZ)	WH

Legend:

CAPPRE:IEC - Component approval electrical:IEC
CAPPRE:ULCUL - Component approval electrical:UL/cUL
CAPPRM:AS1210 - Component approval mechanical:AS1210
CAPPRM:ASME - Component approval mechanical:ASME
CAPPRM:CE - Component approval mechanical:CE
CAPPRM:MHLW - Component approval mechanical:MHLW
CAPPRM:MOM - Component approval mechanical:MOM
COOL:AIR - Cooling:Air cooled
COOL:WATER - Cooling:Water cooled
FREQ:50HZ - Frequency:50 Hz
FREQ:60HZ - Frequency:60 Hz
IDRY:Y - Integrated dryer:Yes
MODEL:GA75VP_16 - Model:GA 75VSD+
MOVOL:200V - Supply voltage:200 V
MOVOL:230V - Supply voltage:230 V
MOVOL:380V - Supply voltage:380 V
MOVOL:400V - Supply voltage:400 V
MOVOL:460V - Supply voltage:460 V
MOVOL:500V - Supply voltage:500 V
MOVOL:575V - Supply voltage:575 V

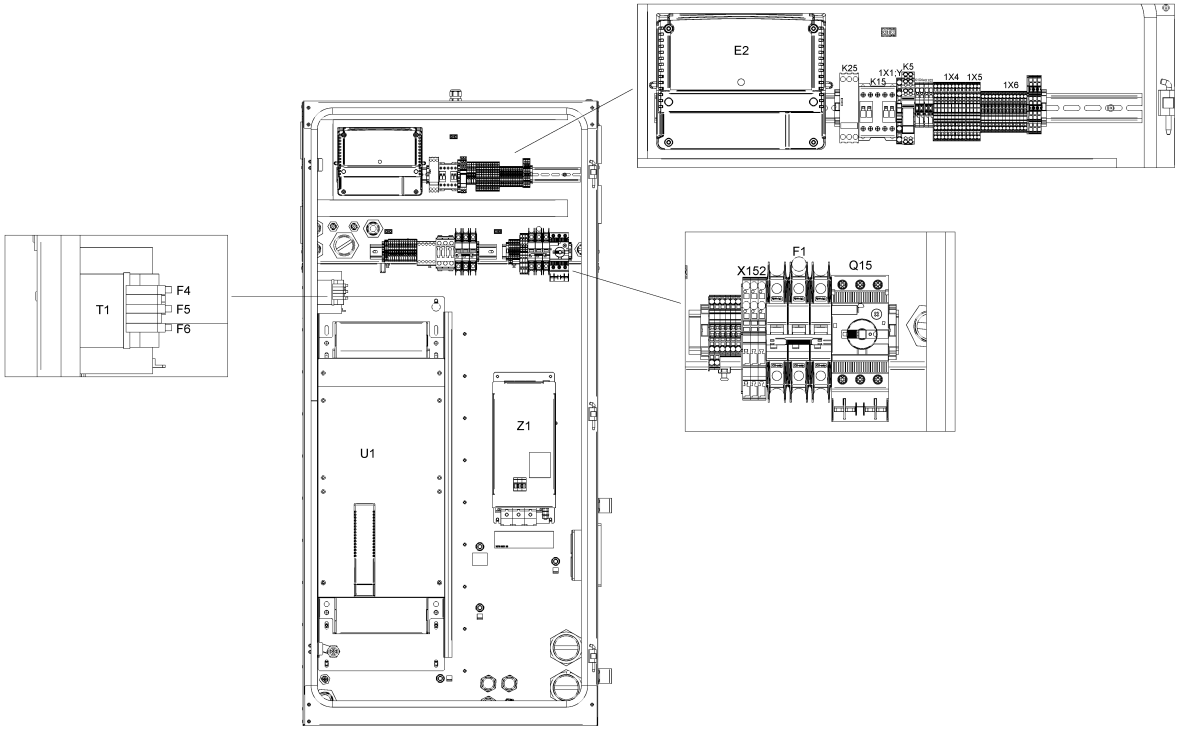
E2
K25
K15
1X1:Y
K5
1X4
1X5
1X6
T1
F4
F5
F6
U1
Z1
X152
F1
Q15

21.10 - Cubicle components GA 75L VSD+ - ((200V-400V-500V/50Hz, 460V/60Hz) - IEC, (230V-460V-575V/60Hz - UL-cUL)) - Full-Feature (28/11/2019 - ...)

(((MOVOL:200V , MOVOL:400V , MOVOL:500V) + FREQ:50HZ , FREQ:60HZ + MOVOL:460V) + CAPPRE:IEC , (MOVOL:230V , MOVOL:460V , MOVOL:575V) + CAPPRE:ULCUL + FREQ:60HZ) + IDRY:Y + MODEL:GA75VP_16

Ref	Part Number	Qty	Name	Validity	EL
	1649 8002 40	1	WIRE HARNESS	**(25/02/2019 - 24/07/2019)** (((CAPPRM:AS1210 , CAPPRM:CE , CAPPRM:MHLW , CAPPRM:MOM) + FREQ:50HZ + MOVOL:400V , (MOVOL:380V , MOVOL:460V) + CAPPRM:ASME + FREQ:60HZ) + CAPPRE:IEC , CAPPRE:ULCUL + CAPPRM:ASME + FREQ:60HZ + MOVOL:460V) + COOL:WATER **(25/07/2019 - 27/11/2019)** ((((MOVOL:380V , MOVOL:460V) + CAPPRM:ASME , CAPPRM:MHLW + MOVOL:460V) + FREQ:60HZ , (CAPPRM:AS1210 , CAPPRM:CE , CAPPRM:MHLW , CAPPRM:MOM) + FREQ:50HZ + MOVOL:400V) + CAPPRE:IEC , CAPPRE:ULCUL + CAPPRM:ASME + FREQ:60HZ + MOVOL:460V) + COOL:WATER **(28/11/2019 - ...)** ((((CAPPRM:AS1210 , CAPPRM:CE , CAPPRM:MHLW , CAPPRM:MOM) + MOVOL:400V , (CAPPRM:CE + MOVOL:500V , CAPPRM:MHLW + MOVOL:200V) + COOL:AIR) + FREQ:50HZ , ((CAPPRM:ASME , CAPPRM:MHLW) + MOVOL:460V , CAPPRM:ASME + COOL:WATER + MOVOL:380V) + FREQ:60HZ) + CAPPRE:IEC , ((MOVOL:230V , MOVOL:575V) + COOL:AIR , MOVOL:460V) + CAPPRE:ULCUL + CAPPRM:ASME + FREQ:60HZ)	WH
	1649 8002 72	1	CABLE POWER	**(25/02/2019 - 24/07/2019)** (((CAPPRM:AS1210 , CAPPRM:CE , CAPPRM:MHLW , CAPPRM:MOM) + FREQ:50HZ + MOVOL:400V , (MOVOL:380V , MOVOL:460V) + CAPPRM:ASME + FREQ:60HZ) + CAPPRE:IEC , CAPPRE:ULCUL + CAPPRM:ASME + FREQ:60HZ + MOVOL:460V) + COOL:WATER **(25/07/2019 - 27/11/2019)** ((((MOVOL:380V , MOVOL:460V) + CAPPRM:ASME , CAPPRM:MHLW + MOVOL:460V) + FREQ:60HZ , (CAPPRM:AS1210 , CAPPRM:CE , CAPPRM:MHLW , CAPPRM:MOM) + FREQ:50HZ + MOVOL:400V) + CAPPRE:IEC , CAPPRE:ULCUL + CAPPRM:ASME + FREQ:60HZ + MOVOL:460V) + COOL:WATER **(28/11/2019 - ...)** ((((CAPPRM:AS1210 , CAPPRM:CE , CAPPRM:MHLW , CAPPRM:MOM) + MOVOL:400V , (CAPPRM:CE + MOVOL:500V , CAPPRM:MHLW + MOVOL:200V) + COOL:AIR) + FREQ:50HZ , ((CAPPRM:ASME , CAPPRM:MHLW) + MOVOL:460V , CAPPRM:ASME + COOL:WATER + MOVOL:380V) + FREQ:60HZ) + CAPPRE:IEC , ((MOVOL:230V , MOVOL:575V) + COOL:AIR , MOVOL:460V) + CAPPRE:ULCUL + CAPPRM:ASME + FREQ:60HZ)	

Electrical legend: Full feature (FF) Drain

Legend:

CAPPRE:IEC - Component approval electrical:IEC
CAPPRE:ULCUL - Component approval electrical:UL/cUL
CAPPRM:AS1210 - Component approval mechanical:AS1210
CAPPRM:ASME - Component approval mechanical:ASME
CAPPRM:CE - Component approval mechanical:CE
CAPPRM:MHLW - Component approval mechanical:MHLW
CAPPRM:MOM - Component approval mechanical:MOM
COOL:AIR - Cooling:Air cooled
COOL:WATER - Cooling:Water cooled
FREQ:50HZ - Frequency:50 Hz
FREQ:60HZ - Frequency:60 Hz
IDRY:Y - Integrated dryer:Yes
MODEL:GA75VP_16 - Model:GA 75VSD+
MOVOL:200V - Supply voltage:200 V
MOVOL:230V - Supply voltage:230 V
MOVOL:380V - Supply voltage:380 V
MOVOL:400V - Supply voltage:400 V
MOVOL:460V - Supply voltage:460 V
MOVOL:500V - Supply voltage:500 V
MOVOL:575V - Supply voltage:575 V

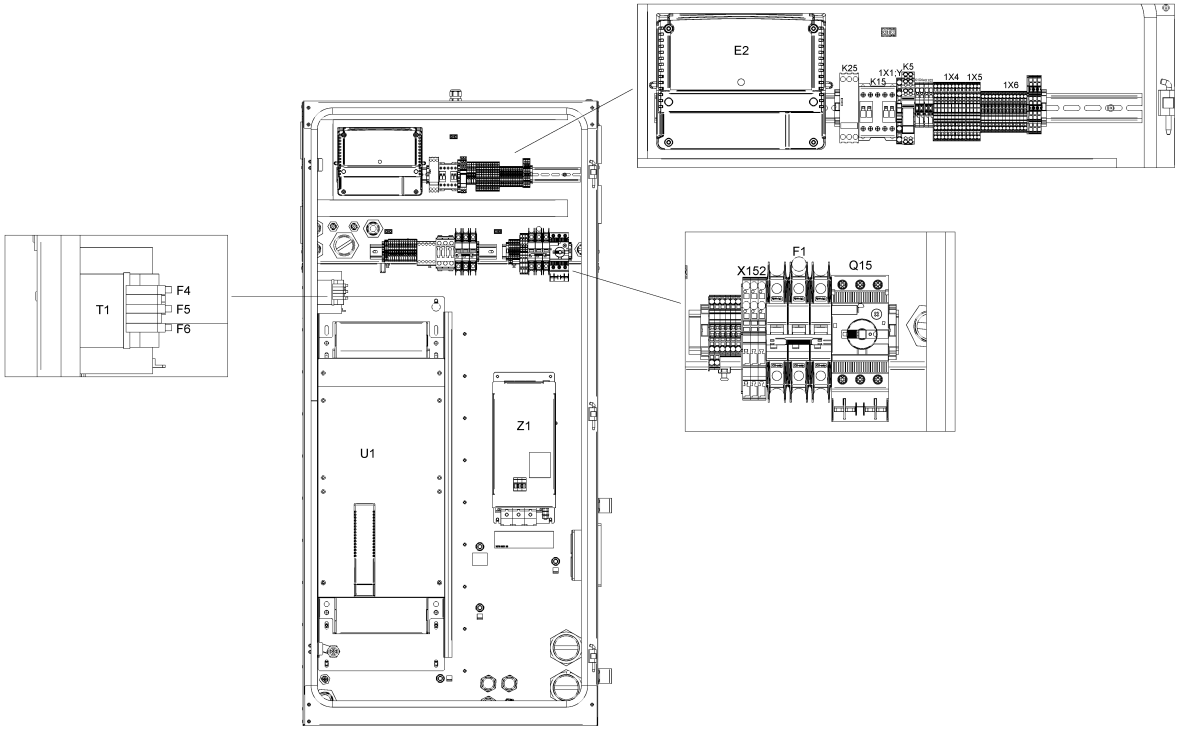
E2
K25
K15
1X1:Y
K5
1X4
1X5
1X6
T1
F4
F5
F6
U1
Z1
X152
F1
Q15

21.10 - Cubicle components GA 75L VSD+ - ((200V-400V-500V/50Hz, 460V/60Hz) - IEC, (230V-460V-575V/60Hz - UL-cUL)) - Full-Feature (28/11/2019 - ...)

(((MOVOL:200V , MOVOL:400V , MOVOL:500V) + FREQ:50HZ , FREQ:60HZ + MOVOL:460V) + CAPPRE:IEC , (MOVOL:230V , MOVOL:460V , MOVOL:575V) + CAPPRE:ULCUL + FREQ:60HZ) + IDRY:Y + MODEL:GA75VP_16

Ref	Part Number	Qty	Name	Validity	EL
	1649 8002 73	1	WIRE HARNESS	**(25/02/2019 - 24/07/2019)** (((CAPPRM:AS1210 , CAPPRM:CE , CAPPRM:MHLW , CAPPRM:MOM) + FREQ:50HZ + MOVOL:400V , (MOVOL:380V , MOVOL:460V) + CAPPRM:ASME + FREQ:60HZ) + CAPPRE:IEC , CAPPRE:ULCUL + CAPPRM:ASME + FREQ:60HZ + MOVOL:460V) + COOL:WATER **(25/07/2019 - 27/11/2019)** ((((MOVOL:380V , MOVOL:460V) + CAPPRM:ASME , CAPPRM:MHLW + MOVOL:460V) + FREQ:60HZ , (CAPPRM:AS1210 , CAPPRM:CE , CAPPRM:MHLW , CAPPRM:MOM) + FREQ:50HZ + MOVOL:400V) + CAPPRE:IEC , CAPPRE:ULCUL + CAPPRM:ASME + FREQ:60HZ + MOVOL:460V) + COOL:WATER **(28/11/2019 - ...)** ((((CAPPRM:AS1210 , CAPPRM:CE , CAPPRM:MHLW , CAPPRM:MOM) + MOVOL:400V , (CAPPRM:CE + MOVOL:500V , CAPPRM:MHLW + MOVOL:200V) + COOL:AIR) + FREQ:50HZ , ((CAPPRM:ASME , CAPPRM:MHLW) + MOVOL:460V , CAPPRM:ASME + COOL:WATER + MOVOL:380V) + FREQ:60HZ) + CAPPRE:IEC , ((MOVOL:230V , MOVOL:575V) + COOL:AIR , MOVOL:460V) + CAPPRE:ULCUL + CAPPRM:ASME + FREQ:60HZ)	
	Electrical legend:	Pack Drain + Air filter switch			
	1649 8002 75	1	WIRE HARNESS	**(25/02/2019 - 24/07/2019)** (((CAPPRM:AS1210 , CAPPRM:CE , CAPPRM:MHLW , CAPPRM:MOM) + FREQ:50HZ + MOVOL:400V , (MOVOL:380V , MOVOL:460V) + CAPPRM:ASME + FREQ:60HZ) + CAPPRE:IEC , CAPPRE:ULCUL + CAPPRM:ASME + FREQ:60HZ + MOVOL:460V) + COOL:WATER **(25/07/2019 - 27/11/2019)** ((((MOVOL:380V , MOVOL:460V) + CAPPRM:ASME , CAPPRM:MHLW + MOVOL:460V) + FREQ:60HZ , (CAPPRM:AS1210 , CAPPRM:CE , CAPPRM:MHLW , CAPPRM:MOM) + FREQ:50HZ + MOVOL:400V) + CAPPRE:IEC , CAPPRE:ULCUL + CAPPRM:ASME + FREQ:60HZ + MOVOL:460V) + COOL:WATER **(28/11/2019 - ...)** ((((CAPPRM:AS1210 , CAPPRM:CE , CAPPRM:MHLW , CAPPRM:MOM) + MOVOL:400V , (CAPPRM:CE + MOVOL:500V , CAPPRM:MHLW + MOVOL:200V) + COOL:AIR) + FREQ:50HZ , ((CAPPRM:ASME , CAPPRM:MHLW) + MOVOL:460V , CAPPRM:ASME + COOL:WATER + MOVOL:380V) + FREQ:60HZ) + CAPPRE:IEC , ((MOVOL:230V , MOVOL:575V) + COOL:AIR , MOVOL:460V) + CAPPRE:ULCUL + CAPPRM:ASME + FREQ:60HZ)	
	Electrical legend:	Relative Humidity sensor			

Legend:

CAPPRE:IEC - Component approval electrical:IEC
CAPPRE:ULCUL - Component approval electrical:UL/cUL
CAPPRM:AS1210 - Component approval mechanical:AS1210
CAPPRM:ASME - Component approval mechanical:ASME
CAPPRM:CE - Component approval mechanical:CE
CAPPRM:MHLW - Component approval mechanical:MHLW
CAPPRM:MOM - Component approval mechanical:MOM
COOL:AIR - Cooling:Air cooled
COOL:WATER - Cooling:Water cooled
FREQ:50HZ - Frequency:50 Hz
FREQ:60HZ - Frequency:60 Hz
IDRY:Y - Integrated dryer:Yes
MODEL:GA75VP_16 - Model:GA 75VSD+
MOVOL:200V - Supply voltage:200 V
MOVOL:230V - Supply voltage:230 V
MOVOL:380V - Supply voltage:380 V
MOVOL:400V - Supply voltage:400 V
MOVOL:460V - Supply voltage:460 V
MOVOL:500V - Supply voltage:500 V
MOVOL:575V - Supply voltage:575 V

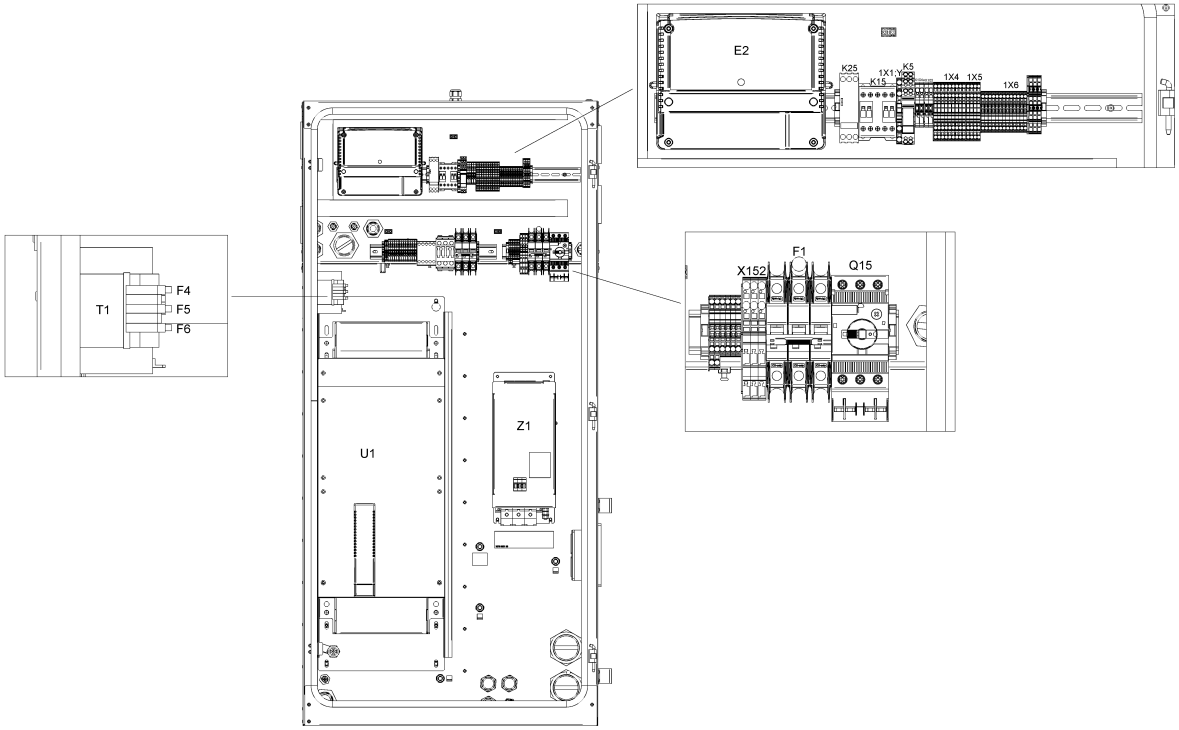
E2
K25
K15
1X1:Y
K5
1X4
1X5
1X6
T1
F4
F5
F6
U1
Z1
X152
F1
Q15

Ref	Part Number	Qty	Name	Validity	EL
	1649 8001 45	3	MOTOR CABLE	**(25/02/2019 - 24/07/2019)** (((CAPPRM:AS1210 , CAPPRM:CE , CAPPRM:MHLW , CAPPRM:MOM) + FREQ:50HZ + MOVOL:400V , (MOVOL:380V , MOVOL:460V) + CAPPRM:ASME + FREQ:60HZ) + CAPPRE:IEC , CAPPRE:ULCUL + CAPPRM:ASME + FREQ:60HZ + MOVOL:460V) + COOL:WATER **(25/07/2019 - 27/11/2019)** ((((MOVOL:380V , MOVOL:460V) + CAPPRM:ASME , CAPPRM:MHLW + MOVOL:460V) + FREQ:60HZ , (CAPPRM:AS1210 , CAPPRM:CE , CAPPRM:MHLW , CAPPRM:MOM) + FREQ:50HZ + MOVOL:400V) + CAPPRE:IEC , CAPPRE:ULCUL + CAPPRM:ASME + FREQ:60HZ + MOVOL:460V) + COOL:WATER **(28/11/2019 - ...)** ((((CAPPRM:AS1210 , CAPPRM:CE , CAPPRM:MHLW , CAPPRM:MOM) + MOVOL:400V , (CAPPRM:CE + MOVOL:500V , CAPPRM:MHLW + MOVOL:200V) + COOL:AIR) + FREQ:50HZ , ((CAPPRM:ASME , CAPPRM:MHLW) + MOVOL:460V , CAPPRM:ASME + COOL:WATER + MOVOL:380V) + FREQ:60HZ) + CAPPRE:IEC , ((MOVOL:230V , MOVOL:575V) + COOL:AIR , MOVOL:460V) + CAPPRE:ULCUL + CAPPRM:ASME + FREQ:60HZ)	
	Electrical legend:	Motor conduit			
	1649 8001 48	1	MOTOR CABLE	**(25/02/2019 - 24/07/2019)** (((CAPPRM:AS1210 , CAPPRM:CE , CAPPRM:MHLW , CAPPRM:MOM) + FREQ:50HZ + MOVOL:400V , (MOVOL:380V , MOVOL:460V) + CAPPRM:ASME + FREQ:60HZ) + CAPPRE:IEC , CAPPRE:ULCUL + CAPPRM:ASME + FREQ:60HZ + MOVOL:460V) + COOL:WATER **(25/07/2019 - 27/11/2019)** ((((MOVOL:380V , MOVOL:460V) + CAPPRM:ASME , CAPPRM:MHLW + MOVOL:460V) + FREQ:60HZ , (CAPPRM:AS1210 , CAPPRM:CE , CAPPRM:MHLW , CAPPRM:MOM) + FREQ:50HZ + MOVOL:400V) + CAPPRE:IEC , CAPPRE:ULCUL + CAPPRM:ASME + FREQ:60HZ + MOVOL:460V) + COOL:WATER **(28/11/2019 - ...)** ((((CAPPRM:AS1210 , CAPPRM:CE , CAPPRM:MHLW , CAPPRM:MOM) + MOVOL:400V , (CAPPRM:CE + MOVOL:500V , CAPPRM:MHLW + MOVOL:200V) + COOL:AIR) + FREQ:50HZ , ((CAPPRM:ASME , CAPPRM:MHLW) + MOVOL:460V , CAPPRM:ASME + COOL:WATER + MOVOL:380V) + FREQ:60HZ) + CAPPRE:IEC , ((MOVOL:230V , MOVOL:575V) + COOL:AIR , MOVOL:460V) + CAPPRE:ULCUL + CAPPRM:ASME + FREQ:60HZ)	
	Electrical legend:	Motor conduit			

Legend:

CAPPRE:IEC - Component approval electrical:IEC
CAPPRE:ULCUL - Component approval electrical:UL/cUL
CAPPRM:AS1210 - Component approval mechanical:AS1210
CAPPRM:ASME - Component approval mechanical:ASME
CAPPRM:CE - Component approval mechanical:CE
CAPPRM:MHLW - Component approval mechanical:MHLW
CAPPRM:MOM - Component approval mechanical:MOM
COOL:AIR - Cooling:Air cooled
COOL:WATER - Cooling:Water cooled
FREQ:50HZ - Frequency:50 Hz
FREQ:60HZ - Frequency:60 Hz
IDRY:Y - Integrated dryer:Yes
MODEL:GA75VP_16 - Model:GA 75VSD+
MOVOL:200V - Supply voltage:200 V
MOVOL:230V - Supply voltage:230 V
MOVOL:380V - Supply voltage:380 V
MOVOL:400V - Supply voltage:400 V
MOVOL:460V - Supply voltage:460 V
MOVOL:500V - Supply voltage:500 V
MOVOL:575V - Supply voltage:575 V

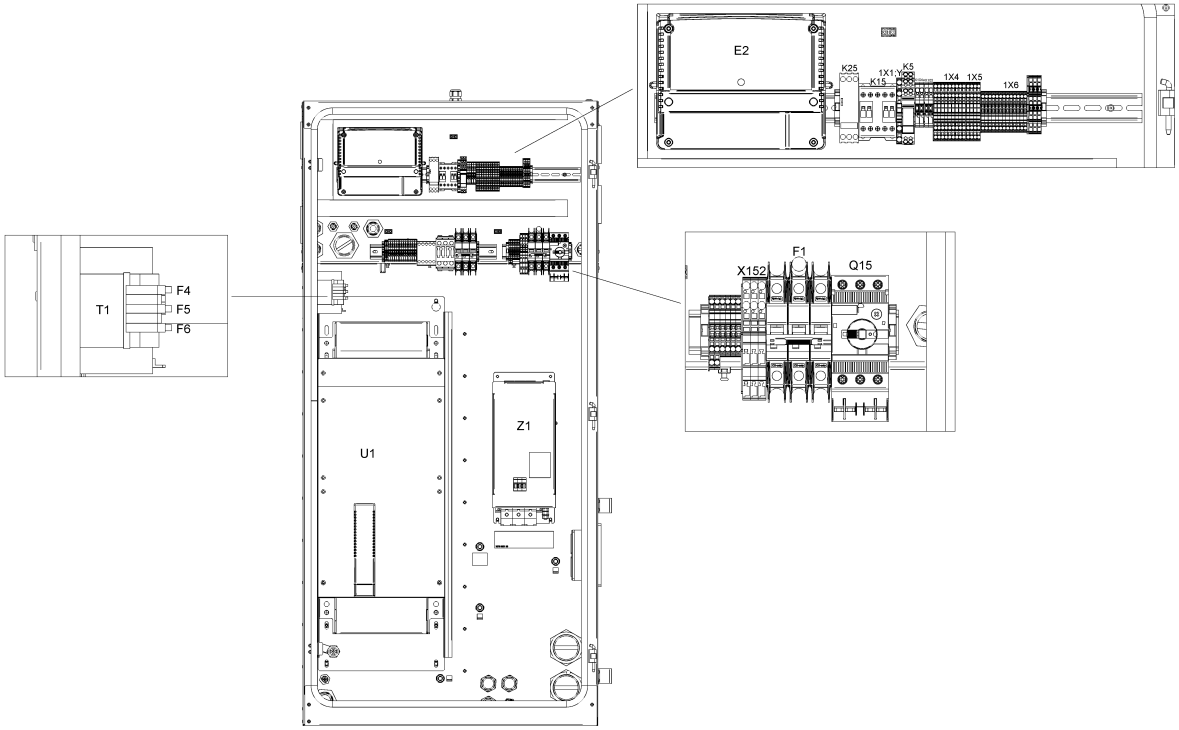
E2
K25
K15
1X1:Y
K5
1X4
1X5
1X6
T1
F4
F5
F6
U1
Z1
X152
F1
Q15

21.10 - Cubicle components GA 75L VSD+ - ((200V-400V-500V/50Hz, 460V/60Hz) - IEC, (230V-460V-575V/60Hz - UL-cUL)) - Full-Feature (28/11/2019 - ...)

(((MOVOL:200V , MOVOL:400V , MOVOL:500V) + FREQ:50HZ , FREQ:60HZ + MOVOL:460V) + CAPPRE:IEC , (MOVOL:230V , MOVOL:460V , MOVOL:575V) + CAPPRE:ULCUL + FREQ:60HZ) + IDRY:Y + MODEL:GA75VP_16

Ref	Part Number	Qty	Name	Validity	EL
	1625 3906 31	1	DATA LABEL	**(25/02/2019 - 24/07/2019)** (((CAPPRM:AS1210 , CAPPRM:CE , CAPPRM:MHLW , CAPPRM:MOM) + FREQ:50HZ + MOVOL:400V , (MOVOL:380V , MOVOL:460V) + CAPPRM:ASME + FREQ:60HZ) + CAPPRE:IEC , CAPPRE:ULCUL + CAPPRM:ASME + FREQ:60HZ + MOVOL:460V) + COOL:WATER **(25/07/2019 - 27/11/2019)** ((((MOVOL:380V , MOVOL:460V) + CAPPRM:ASME , CAPPRM:MHLW + MOVOL:460V) + FREQ:60HZ , (CAPPRM:AS1210 , CAPPRM:CE , CAPPRM:MHLW , CAPPRM:MOM) + FREQ:50HZ + MOVOL:400V) + CAPPRE:IEC , CAPPRE:ULCUL + CAPPRM:ASME + FREQ:60HZ + MOVOL:460V) + COOL:WATER **(28/11/2019 - ...)** ((((CAPPRM:AS1210 , CAPPRM:CE , CAPPRM:MHLW , CAPPRM:MOM) + MOVOL:400V , (CAPPRM:CE + MOVOL:500V , CAPPRM:MHLW + MOVOL:200V) + COOL:AIR) + FREQ:50HZ , ((CAPPRM:ASME , CAPPRM:MHLW) + MOVOL:460V , CAPPRM:ASME + COOL:WATER + MOVOL:380V) + FREQ:60HZ) + CAPPRE:IEC , ((MOVOL:230V , MOVOL:575V) + COOL:AIR , MOVOL:460V) + CAPPRE:ULCUL + CAPPRM:ASME + FREQ:60HZ)	Label
	1079 9901 68	1	WARNING LABEL	**(25/02/2019 - 24/07/2019)** (((CAPPRM:AS1210 , CAPPRM:CE , CAPPRM:MHLW , CAPPRM:MOM) + FREQ:50HZ + MOVOL:400V , (MOVOL:380V , MOVOL:460V) + CAPPRM:ASME + FREQ:60HZ) + CAPPRE:IEC , CAPPRE:ULCUL + CAPPRM:ASME + FREQ:60HZ + MOVOL:460V) + COOL:WATER **(25/07/2019 - 27/11/2019)** ((((MOVOL:380V , MOVOL:460V) + CAPPRM:ASME , CAPPRM:MHLW + MOVOL:460V) + FREQ:60HZ , (CAPPRM:AS1210 , CAPPRM:CE , CAPPRM:MHLW , CAPPRM:MOM) + FREQ:50HZ + MOVOL:400V) + CAPPRE:IEC , CAPPRE:ULCUL + CAPPRM:ASME + FREQ:60HZ + MOVOL:460V) + COOL:WATER **(28/11/2019 - ...)** ((((CAPPRM:AS1210 , CAPPRM:CE , CAPPRM:MHLW , CAPPRM:MOM) + MOVOL:400V , (CAPPRM:CE + MOVOL:500V , CAPPRM:MHLW + MOVOL:200V) + COOL:AIR) + FREQ:50HZ , ((CAPPRM:ASME , CAPPRM:MHLW) + MOVOL:460V , CAPPRM:ASME + COOL:WATER + MOVOL:380V) + FREQ:60HZ) + CAPPRE:IEC , ((MOVOL:230V , MOVOL:575V) + COOL:AIR , MOVOL:460V) + CAPPRE:ULCUL + CAPPRM:ASME + FREQ:60HZ)	Label

Legend:

CAPPRE:IEC - Component approval electrical:IEC
CAPPRE:ULCUL - Component approval electrical:UL/cUL
CAPPRM:AS1210 - Component approval mechanical:AS1210
CAPPRM:ASME - Component approval mechanical:ASME
CAPPRM:CE - Component approval mechanical:CE
CAPPRM:MHLW - Component approval mechanical:MHLW
CAPPRM:MOM - Component approval mechanical:MOM
COOL:AIR - Cooling:Air cooled
COOL:WATER - Cooling:Water cooled
FREQ:50HZ - Frequency:50 Hz
FREQ:60HZ - Frequency:60 Hz
IDRY:Y - Integrated dryer:Yes
MODEL:GA75VP_16 - Model:GA 75VSD+
MOVOL:200V - Supply voltage:200 V
MOVOL:230V - Supply voltage:230 V
MOVOL:380V - Supply voltage:380 V
MOVOL:400V - Supply voltage:400 V
MOVOL:460V - Supply voltage:460 V
MOVOL:500V - Supply voltage:500 V
MOVOL:575V - Supply voltage:575 V

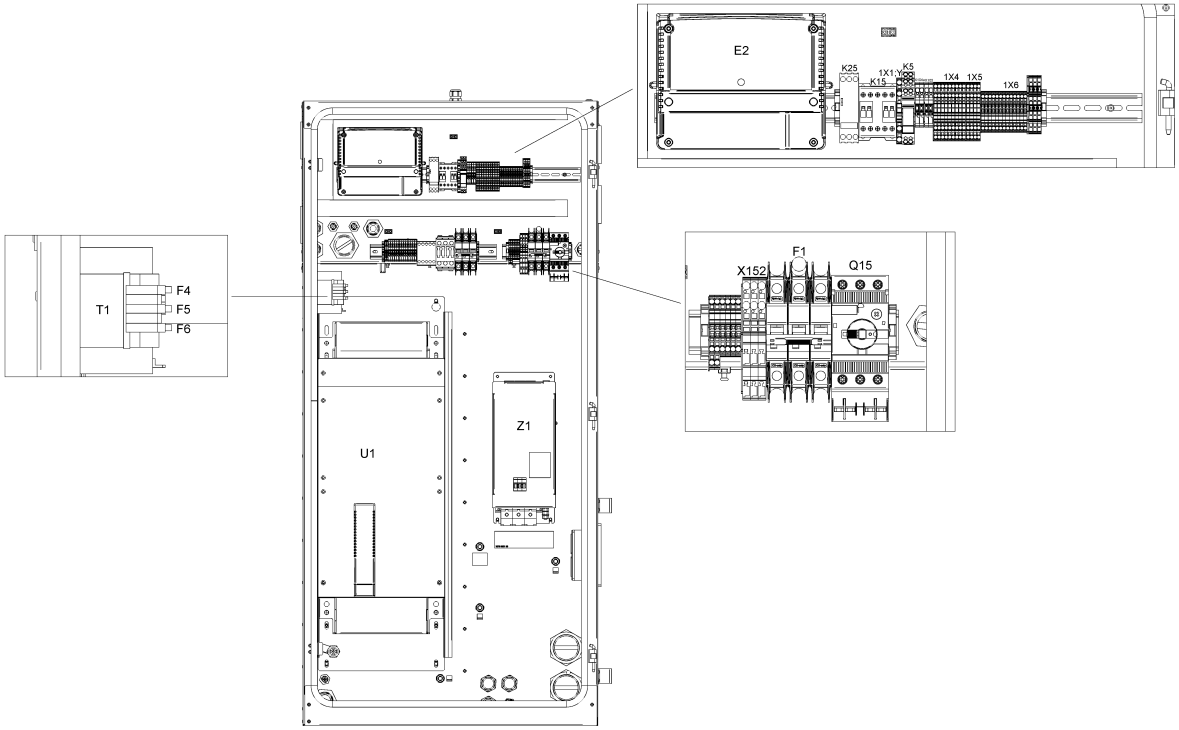
E2
K25
K15
1X1:Y
K5
1X4
1X5
1X6
T1
F4
F5
F6
U1
Z1
X152
F1
Q15

21.10 - Cubicle components GA 75L VSD+ - ((200V-400V-500V/50Hz, 460V/60Hz) - IEC, (230V-460V-575V/60Hz - UL-cUL)) - Full-Feature (28/11/2019 - ...)

(((MOVOL:200V , MOVOL:400V , MOVOL:500V) + FREQ:50HZ , FREQ:60HZ + MOVOL:460V) + CAPPRE:IEC , (MOVOL:230V , MOVOL:460V , MOVOL:575V) + CAPPRE:ULCUL + FREQ:60HZ) + IDRY:Y + MODEL:GA75VP_16

Ref	Part Number	Qty	Name	Validity	EL
	1649 8005 00	0	LABEL	**(25/02/2019 - 24/07/2019)** (((CAPPRM:AS1210 , CAPPRM:CE , CAPPRM:MHLW , CAPPRM:MOM) + FREQ:50HZ + MOVOL:400V , (MOVOL:380V , MOVOL:460V) + CAPPRM:ASME + FREQ:60HZ) + CAPPRE:IEC , CAPPRE:ULCUL + CAPPRM:ASME + FREQ:60HZ + MOVOL:460V) + COOL:WATER **(25/07/2019 - 27/11/2019)** ((((MOVOL:380V , MOVOL:460V) + CAPPRM:ASME , CAPPRM:MHLW + MOVOL:460V) + FREQ:60HZ , (CAPPRM:AS1210 , CAPPRM:CE , CAPPRM:MHLW , CAPPRM:MOM) + FREQ:50HZ + MOVOL:400V) + CAPPRE:IEC , CAPPRE:ULCUL + CAPPRM:ASME + FREQ:60HZ + MOVOL:460V) + COOL:WATER **(28/11/2019 - ...)** ((((CAPPRM:AS1210 , CAPPRM:CE , CAPPRM:MHLW , CAPPRM:MOM) + MOVOL:400V , (CAPPRM:CE + MOVOL:500V , CAPPRM:MHLW + MOVOL:200V) + COOL:AIR) + FREQ:50HZ , ((CAPPRM:ASME , CAPPRM:MHLW) + MOVOL:460V , CAPPRM:ASME + COOL:WATER + MOVOL:380V) + FREQ:60HZ) + CAPPRE:IEC , ((MOVOL:230V , MOVOL:575V) + COOL:AIR , MOVOL:460V) + CAPPRE:ULCUL + CAPPRM:ASME + FREQ:60HZ)	Label
	1900 5350 15	1	INVERTER	**(25/02/2019 - 24/07/2019)** (((CAPPRM:AS1210 , CAPPRM:CE , CAPPRM:MHLW , CAPPRM:MOM) + FREQ:50HZ + MOVOL:400V , (MOVOL:380V , MOVOL:460V) + CAPPRM:ASME + FREQ:60HZ) + CAPPRE:IEC , CAPPRE:ULCUL + CAPPRM:ASME + FREQ:60HZ + MOVOL:460V) + COOL:WATER **(25/07/2019 - 27/11/2019)** ((((MOVOL:380V , MOVOL:460V) + CAPPRM:ASME , CAPPRM:MHLW + MOVOL:460V) + FREQ:60HZ , (CAPPRM:AS1210 , CAPPRM:CE , CAPPRM:MHLW , CAPPRM:MOM) + FREQ:50HZ + MOVOL:400V) + CAPPRE:IEC , CAPPRE:ULCUL + CAPPRM:ASME + FREQ:60HZ + MOVOL:460V) + COOL:WATER **(28/11/2019 - ...)** ((((CAPPRM:AS1210 , CAPPRM:CE , CAPPRM:MHLW , CAPPRM:MOM) + MOVOL:400V , (CAPPRM:CE + MOVOL:500V , CAPPRM:MHLW + MOVOL:200V) + COOL:AIR) + FREQ:50HZ , ((CAPPRM:ASME , CAPPRM:MHLW) + MOVOL:460V , CAPPRM:ASME + COOL:WATER + MOVOL:380V) + FREQ:60HZ) + CAPPRE:IEC , ((MOVOL:230V , MOVOL:575V) + COOL:AIR , MOVOL:460V) + CAPPRE:ULCUL + CAPPRM:ASME + FREQ:60HZ)	U1

Legend:

CAPPRE:IEC - Component approval electrical:IEC
CAPPRE:ULCUL - Component approval electrical:UL/cUL
CAPPRM:AS1210 - Component approval mechanical:AS1210
CAPPRM:ASME - Component approval mechanical:ASME
CAPPRM:CE - Component approval mechanical:CE
CAPPRM:MHLW - Component approval mechanical:MHLW
CAPPRM:MOM - Component approval mechanical:MOM
COOL:AIR - Cooling:Air cooled
COOL:WATER - Cooling:Water cooled
FREQ:50HZ - Frequency:50 Hz
FREQ:60HZ - Frequency:60 Hz
IDRY:Y - Integrated dryer:Yes
MODEL:GA75VP_16 - Model:GA 75VSD+
MOVOL:200V - Supply voltage:200 V
MOVOL:230V - Supply voltage:230 V
MOVOL:380V - Supply voltage:380 V
MOVOL:400V - Supply voltage:400 V
MOVOL:460V - Supply voltage:460 V
MOVOL:500V - Supply voltage:500 V
MOVOL:575V - Supply voltage:575 V

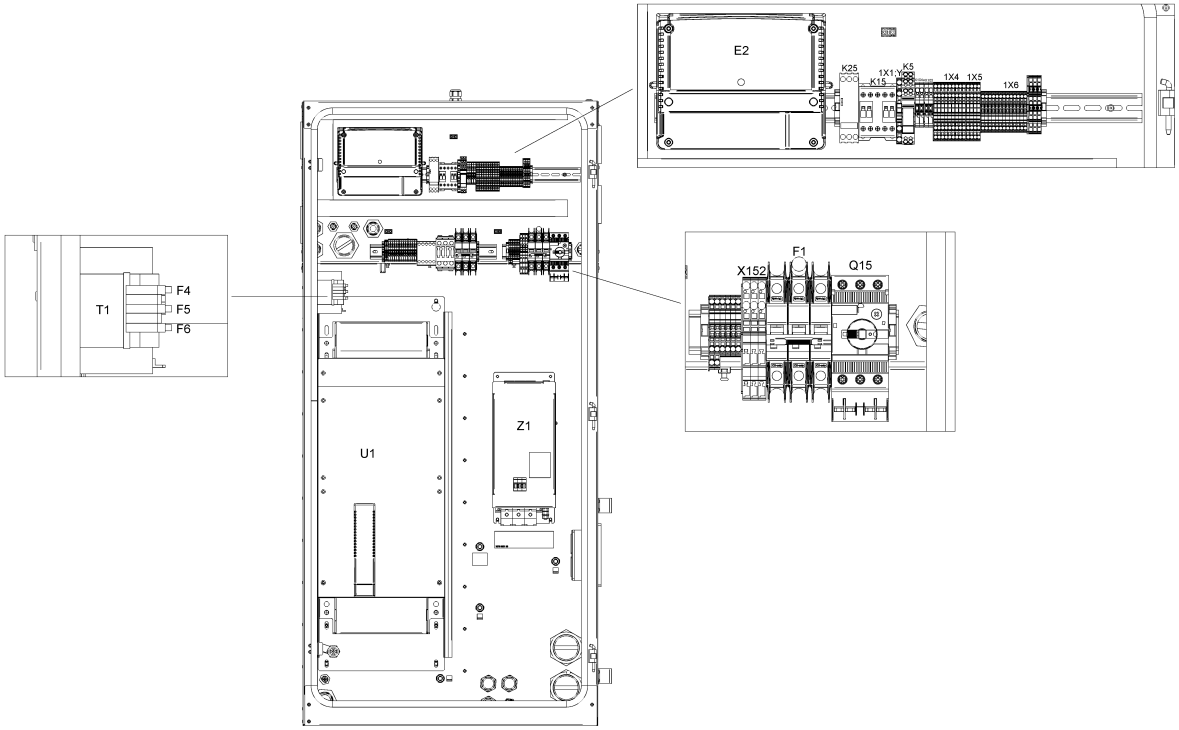
E2
K25
K15
1X1:Y
K5
1X4
1X5
1X6
T1
F4
F5
F6
U1
Z1
X152
F1
Q15

21.10 - Cubicle components GA 75L VSD+ - ((200V-400V-500V/50Hz, 460V/60Hz) - IEC, (230V-460V-575V/60Hz - UL-cUL)) - Full-Feature (28/11/2019 - ...)

(((MOVOL:200V , MOVOL:400V , MOVOL:500V) + FREQ:50HZ , FREQ:60HZ + MOVOL:460V) + CAPPRE:IEC , (MOVOL:230V , MOVOL:460V , MOVOL:575V) + CAPPRE:ULCUL + FREQ:60HZ) + IDRY:Y + MODEL:GA75VP_16

Ref	Part Number	Qty	Name	Validity	EL
	1631 2079 00	1	NANOPERMRING	**(25/02/2019 - 24/07/2019)** (((CAPPRM:AS1210 , CAPPRM:CE , CAPPRM:MHLW , CAPPRM:MOM) + FREQ:50HZ + MOVOL:400V , (MOVOL:380V , MOVOL:460V) + CAPPRM:ASME + FREQ:60HZ) + CAPPRE:IEC , CAPPRE:ULCUL + CAPPRM:ASME + FREQ:60HZ + MOVOL:460V) + COOL:WATER **(25/07/2019 - 27/11/2019)** ((((MOVOL:380V , MOVOL:460V) + CAPPRM:ASME , CAPPRM:MHLW + MOVOL:460V) + FREQ:60HZ , (CAPPRM:AS1210 , CAPPRM:CE , CAPPRM:MHLW , CAPPRM:MOM) + FREQ:50HZ + MOVOL:400V) + CAPPRE:IEC , CAPPRE:ULCUL + CAPPRM:ASME + FREQ:60HZ + MOVOL:460V) + COOL:WATER **(28/11/2019 - ...)** ((((CAPPRM:AS1210 , CAPPRM:CE , CAPPRM:MHLW , CAPPRM:MOM) + MOVOL:400V , (CAPPRM:CE + MOVOL:500V , CAPPRM:MHLW + MOVOL:200V) + COOL:AIR) + FREQ:50HZ , ((CAPPRM:ASME , CAPPRM:MHLW) + MOVOL:460V , CAPPRM:ASME + COOL:WATER + MOVOL:380V) + FREQ:60HZ) + CAPPRE:IEC , ((MOVOL:230V , MOVOL:575V) + COOL:AIR , MOVOL:460V) + CAPPRE:ULCUL + CAPPRM:ASME + FREQ:60HZ)	
	Electrical legend:	Nanoperm ring			
	0697 9811 17	2	PLUG	**(25/02/2019 - 24/07/2019)** (((CAPPRM:AS1210 , CAPPRM:CE , CAPPRM:MHLW , CAPPRM:MOM) + FREQ:50HZ + MOVOL:400V , (MOVOL:380V , MOVOL:460V) + CAPPRM:ASME + FREQ:60HZ) + CAPPRE:IEC , CAPPRE:ULCUL + CAPPRM:ASME + FREQ:60HZ + MOVOL:460V) + COOL:WATER **(25/07/2019 - 27/11/2019)** ((((MOVOL:380V , MOVOL:460V) + CAPPRM:ASME , CAPPRM:MHLW + MOVOL:460V) + FREQ:60HZ , (CAPPRM:AS1210 , CAPPRM:CE , CAPPRM:MHLW , CAPPRM:MOM) + FREQ:50HZ + MOVOL:400V) + CAPPRE:IEC , CAPPRE:ULCUL + CAPPRM:ASME + FREQ:60HZ + MOVOL:460V) + COOL:WATER **(28/11/2019 - ...)** ((((CAPPRM:AS1210 , CAPPRM:CE , CAPPRM:MHLW , CAPPRM:MOM) + MOVOL:400V , (CAPPRM:CE + MOVOL:500V , CAPPRM:MHLW + MOVOL:200V) + COOL:AIR) + FREQ:50HZ , ((CAPPRM:ASME , CAPPRM:MHLW) + MOVOL:460V , CAPPRM:ASME + COOL:WATER + MOVOL:380V) + FREQ:60HZ) + CAPPRE:IEC , ((MOVOL:230V , MOVOL:575V) + COOL:AIR , MOVOL:460V) + CAPPRE:ULCUL + CAPPRM:ASME + FREQ:60HZ)	
	Electrical legend:	Plug for transfo supply			

Legend:

CAPPRE:IEC - Component approval electrical:IEC
CAPPRE:ULCUL - Component approval electrical:UL/cUL
CAPPRM:AS1210 - Component approval mechanical:AS1210
CAPPRM:ASME - Component approval mechanical:ASME
CAPPRM:CE - Component approval mechanical:CE
CAPPRM:MHLW - Component approval mechanical:MHLW
CAPPRM:MOM - Component approval mechanical:MOM
COOL:AIR - Cooling:Air cooled
COOL:WATER - Cooling:Water cooled
FREQ:50HZ - Frequency:50 Hz
FREQ:60HZ - Frequency:60 Hz
IDRY:Y - Integrated dryer:Yes
MODEL:GA75VP_16 - Model:GA 75VSD+
MOVOL:200V - Supply voltage:200 V
MOVOL:230V - Supply voltage:230 V
MOVOL:380V - Supply voltage:380 V
MOVOL:400V - Supply voltage:400 V
MOVOL:460V - Supply voltage:460 V
MOVOL:500V - Supply voltage:500 V
MOVOL:575V - Supply voltage:575 V

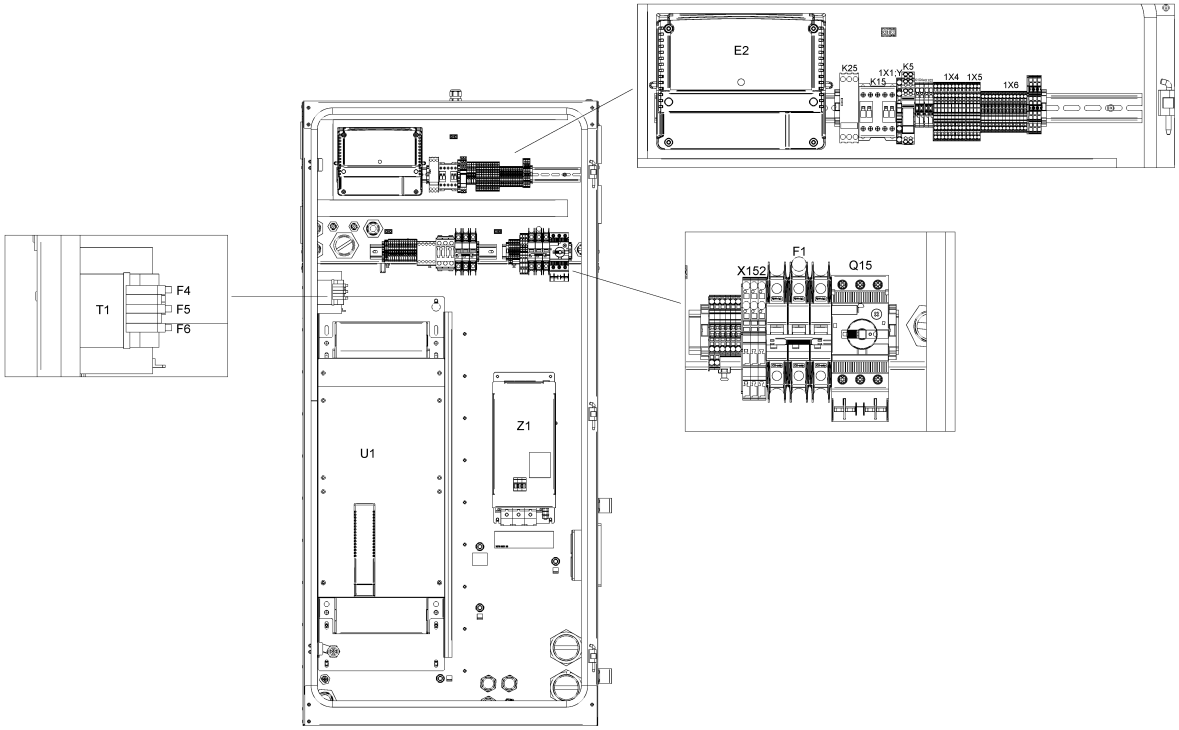
E2
K25
K15
1X1:Y
K5
1X4
1X5
1X6
T1
F4
F5
F6
U1
Z1
X152
F1
Q15

Ref	Part Number	Qty	Name	Validity	EL
	0989 3700 48	2	NUT	**(25/02/2019 - 24/07/2019)** (((CAPPRM:AS1210 , CAPPRM:CE , CAPPRM:MHLW , CAPPRM:MOM) + FREQ:50HZ + MOVOL:400V , (MOVOL:380V , MOVOL:460V) + CAPPRM:ASME + FREQ:60HZ) + CAPPRE:IEC , CAPPRE:ULCUL + CAPPRM:ASME + FREQ:60HZ + MOVOL:460V) + COOL:WATER **(25/07/2019 - 27/11/2019)** ((((MOVOL:380V , MOVOL:460V) + CAPPRM:ASME , CAPPRM:MHLW + MOVOL:460V) + FREQ:60HZ , (CAPPRM:AS1210 , CAPPRM:CE , CAPPRM:MHLW , CAPPRM:MOM) + FREQ:50HZ + MOVOL:400V) + CAPPRE:IEC , CAPPRE:ULCUL + CAPPRM:ASME + FREQ:60HZ + MOVOL:460V) + COOL:WATER **(28/11/2019 - ...)** ((((CAPPRM:AS1210 , CAPPRM:CE , CAPPRM:MHLW , CAPPRM:MOM) + MOVOL:400V , (CAPPRM:CE + MOVOL:500V , CAPPRM:MHLW + MOVOL:200V) + COOL:AIR) + FREQ:50HZ , ((CAPPRM:ASME , CAPPRM:MHLW) + MOVOL:460V , CAPPRM:ASME + COOL:WATER + MOVOL:380V) + FREQ:60HZ) + CAPPRE:IEC , ((MOVOL:230V , MOVOL:575V) + COOL:AIR , MOVOL:460V) + CAPPRE:ULCUL + CAPPRM:ASME + FREQ:60HZ)	
	Electrical legend:	Nut for transfo supply			
	0698 5140 72	1	CABLE GLAND	**(25/02/2019 - 24/07/2019)** (((CAPPRM:AS1210 , CAPPRM:CE , CAPPRM:MHLW , CAPPRM:MOM) + FREQ:50HZ + MOVOL:400V , (MOVOL:380V , MOVOL:460V) + CAPPRM:ASME + FREQ:60HZ) + CAPPRE:IEC , CAPPRE:ULCUL + CAPPRM:ASME + FREQ:60HZ + MOVOL:460V) + COOL:WATER **(25/07/2019 - 27/11/2019)** ((((MOVOL:380V , MOVOL:460V) + CAPPRM:ASME , CAPPRM:MHLW + MOVOL:460V) + FREQ:60HZ , (CAPPRM:AS1210 , CAPPRM:CE , CAPPRM:MHLW , CAPPRM:MOM) + FREQ:50HZ + MOVOL:400V) + CAPPRE:IEC , CAPPRE:ULCUL + CAPPRM:ASME + FREQ:60HZ + MOVOL:460V) + COOL:WATER **(28/11/2019 - ...)** ((((CAPPRM:AS1210 , CAPPRM:CE , CAPPRM:MHLW , CAPPRM:MOM) + MOVOL:400V , (CAPPRM:CE + MOVOL:500V , CAPPRM:MHLW + MOVOL:200V) + COOL:AIR) + FREQ:50HZ , ((CAPPRM:ASME , CAPPRM:MHLW) + MOVOL:460V , CAPPRM:ASME + COOL:WATER + MOVOL:380V) + FREQ:60HZ) + CAPPRE:IEC , ((MOVOL:230V , MOVOL:575V) + COOL:AIR , MOVOL:460V) + CAPPRE:ULCUL + CAPPRM:ASME + FREQ:60HZ)	Fan

Legend:

CAPPRE:IEC - Component approval electrical:IEC
CAPPRE:ULCUL - Component approval electrical:UL/cUL
CAPPRM:AS1210 - Component approval mechanical:AS1210
CAPPRM:ASME - Component approval mechanical:ASME
CAPPRM:CE - Component approval mechanical:CE
CAPPRM:MHLW - Component approval mechanical:MHLW
CAPPRM:MOM - Component approval mechanical:MOM
COOL:AIR - Cooling:Air cooled
COOL:WATER - Cooling:Water cooled
FREQ:50HZ - Frequency:50 Hz
FREQ:60HZ - Frequency:60 Hz
IDRY:Y - Integrated dryer:Yes
MODEL:GA75VP_16 - Model:GA 75VSD+
MOVOL:200V - Supply voltage:200 V
MOVOL:230V - Supply voltage:230 V
MOVOL:380V - Supply voltage:380 V
MOVOL:400V - Supply voltage:400 V
MOVOL:460V - Supply voltage:460 V
MOVOL:500V - Supply voltage:500 V
MOVOL:575V - Supply voltage:575 V

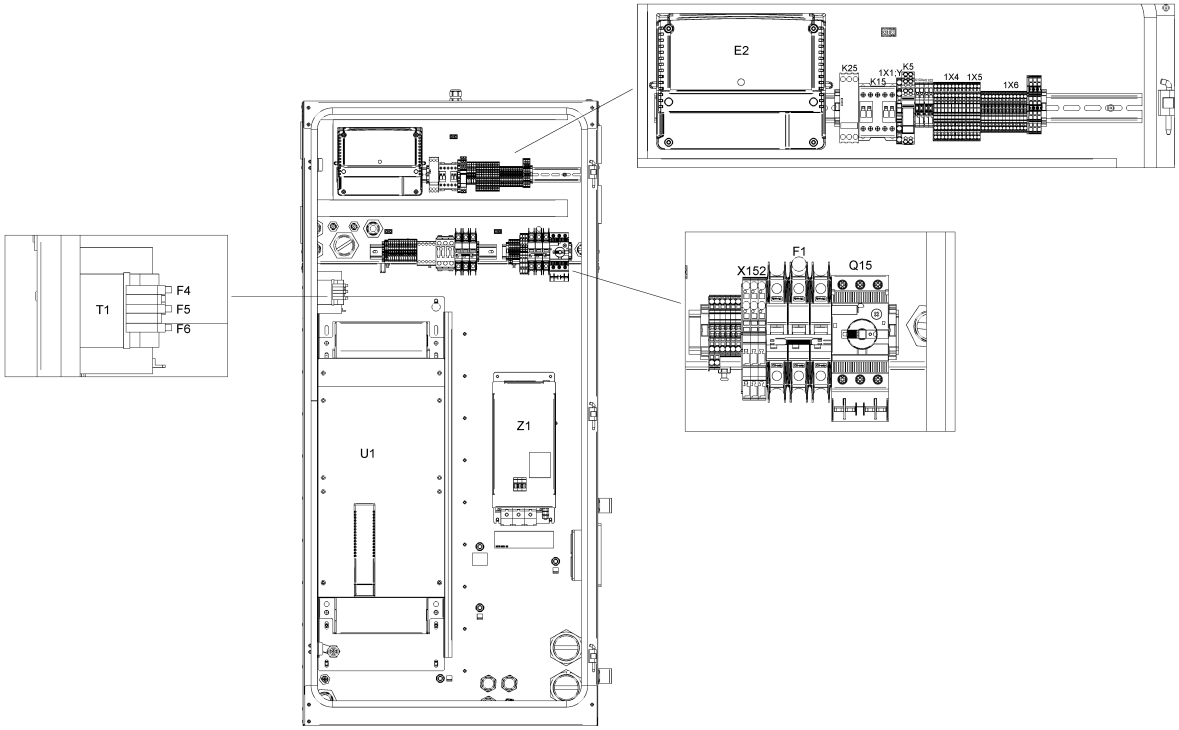
E2
K25
K15
1X1:Y
K5
1X4
1X5
1X6
T1
F4
F5
F6
U1
Z1
X152
F1
Q15

Ref	Part Number	Qty	Name	Validity	EL
	0698 5140 71	1	CABLE GLAND	**(25/02/2019 - 24/07/2019)** (((CAPPRM:AS1210 , CAPPRM:CE , CAPPRM:MHLW , CAPPRM:MOM) + FREQ:50HZ + MOVOL:400V , (MOVOL:380V , MOVOL:460V) + CAPPRM:ASME + FREQ:60HZ) + CAPPRE:IEC , CAPPRE:ULCUL + CAPPRM:ASME + FREQ:60HZ + MOVOL:460V) + COOL:WATER **(25/07/2019 - 27/11/2019)** ((((MOVOL:380V , MOVOL:460V) + CAPPRM:ASME , CAPPRM:MHLW + MOVOL:460V) + FREQ:60HZ , (CAPPRM:AS1210 , CAPPRM:CE , CAPPRM:MHLW , CAPPRM:MOM) + FREQ:50HZ + MOVOL:400V) + CAPPRE:IEC , CAPPRE:ULCUL + CAPPRM:ASME + FREQ:60HZ + MOVOL:460V) + COOL:WATER **(28/11/2019 - ...)** ((((CAPPRM:AS1210 , CAPPRM:CE , CAPPRM:MHLW , CAPPRM:MOM) + MOVOL:400V , (CAPPRM:CE + MOVOL:500V , CAPPRM:MHLW + MOVOL:200V) + COOL:AIR) + FREQ:50HZ , ((CAPPRM:ASME , CAPPRM:MHLW) + MOVOL:460V , CAPPRM:ASME + COOL:WATER + MOVOL:380V) + FREQ:60HZ) + CAPPRE:IEC , ((MOVOL:230V , MOVOL:575V) + COOL:AIR , MOVOL:460V) + CAPPRE:ULCUL + CAPPRM:ASME + FREQ:60HZ)	
	Electrical legend:	Ambient sensor			
	0697 9809 20	1	LOCKNUT	**(25/02/2019 - 24/07/2019)** (((CAPPRM:AS1210 , CAPPRM:CE , CAPPRM:MHLW , CAPPRM:MOM) + FREQ:50HZ + MOVOL:400V , (MOVOL:380V , MOVOL:460V) + CAPPRM:ASME + FREQ:60HZ) + CAPPRE:IEC , CAPPRE:ULCUL + CAPPRM:ASME + FREQ:60HZ + MOVOL:460V) + COOL:WATER **(25/07/2019 - 27/11/2019)** ((((MOVOL:380V , MOVOL:460V) + CAPPRM:ASME , CAPPRM:MHLW + MOVOL:460V) + FREQ:60HZ , (CAPPRM:AS1210 , CAPPRM:CE , CAPPRM:MHLW , CAPPRM:MOM) + FREQ:50HZ + MOVOL:400V) + CAPPRE:IEC , CAPPRE:ULCUL + CAPPRM:ASME + FREQ:60HZ + MOVOL:460V) + COOL:WATER **(28/11/2019 - ...)** ((((CAPPRM:AS1210 , CAPPRM:CE , CAPPRM:MHLW , CAPPRM:MOM) + MOVOL:400V , (CAPPRM:CE + MOVOL:500V , CAPPRM:MHLW + MOVOL:200V) + COOL:AIR) + FREQ:50HZ , ((CAPPRM:ASME , CAPPRM:MHLW) + MOVOL:460V , CAPPRM:ASME + COOL:WATER + MOVOL:380V) + FREQ:60HZ) + CAPPRE:IEC , ((MOVOL:230V , MOVOL:575V) + COOL:AIR , MOVOL:460V) + CAPPRE:ULCUL + CAPPRM:ASME + FREQ:60HZ)	
	Electrical legend:	Ambient sensor			

Legend:

CAPPRE:IEC - Component approval electrical:IEC
CAPPRE:ULCUL - Component approval electrical:UL/cUL
CAPPRM:AS1210 - Component approval mechanical:AS1210
CAPPRM:ASME - Component approval mechanical:ASME
CAPPRM:CE - Component approval mechanical:CE
CAPPRM:MHLW - Component approval mechanical:MHLW
CAPPRM:MOM - Component approval mechanical:MOM
COOL:AIR - Cooling:Air cooled
COOL:WATER - Cooling:Water cooled
FREQ:50HZ - Frequency:50 Hz
FREQ:60HZ - Frequency:60 Hz
IDRY:Y - Integrated dryer:Yes
MODEL:GA75VP_16 - Model:GA 75VSD+
MOVOL:200V - Supply voltage:200 V
MOVOL:230V - Supply voltage:230 V
MOVOL:380V - Supply voltage:380 V
MOVOL:400V - Supply voltage:400 V
MOVOL:460V - Supply voltage:460 V
MOVOL:500V - Supply voltage:500 V
MOVOL:575V - Supply voltage:575 V

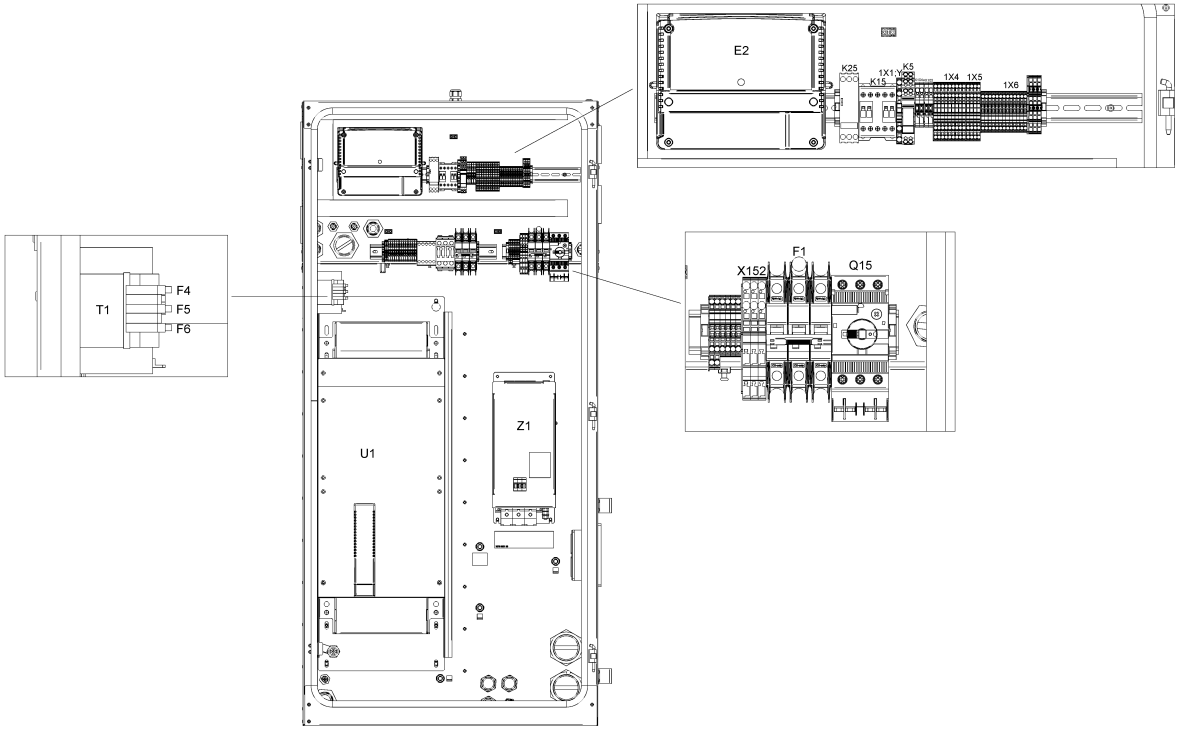
E2
K25
K15
1X1:Y
K5
1X4
1X5
1X6
T1
F4
F5
F6
U1
Z1
X152
F1
Q15

21.10 - Cubicle components GA 75L VSD+ - ((200V-400V-500V/50Hz, 460V/60Hz) - IEC, (230V-460V-575V/60Hz - UL-cUL)) - Full-Feature (28/11/2019 - ...)

(((MOVOL:200V , MOVOL:400V , MOVOL:500V) + FREQ:50HZ , FREQ:60HZ + MOVOL:460V) + CAPPRE:IEC , (MOVOL:230V , MOVOL:460V , MOVOL:575V) + CAPPRE:ULCUL + FREQ:60HZ) + IDRY:Y + MODEL:GA75VP_16

Ref	Part Number	Qty	Name	Validity	EL
	1089 9556 44	1	FAN WITH FILTER	**(25/02/2019 - 24/07/2019)** (((CAPPRM:AS1210 , CAPPRM:CE , CAPPRM:MHLW , CAPPRM:MOM) + FREQ:50HZ + MOVOL:400V , (MOVOL:380V , MOVOL:460V) + CAPPRM:ASME + FREQ:60HZ) + CAPPRE:IEC , CAPPRE:ULCUL + CAPPRM:ASME + FREQ:60HZ + MOVOL:460V) + COOL:WATER **(25/07/2019 - 27/11/2019)** ((((MOVOL:380V , MOVOL:460V) + CAPPRM:ASME , CAPPRM:MHLW + MOVOL:460V) + FREQ:60HZ , (CAPPRM:AS1210 , CAPPRM:CE , CAPPRM:MHLW , CAPPRM:MOM) + FREQ:50HZ + MOVOL:400V) + CAPPRE:IEC , CAPPRE:ULCUL + CAPPRM:ASME + FREQ:60HZ + MOVOL:460V) + COOL:WATER **(28/11/2019 - ...)** ((((CAPPRM:AS1210 , CAPPRM:CE , CAPPRM:MHLW , CAPPRM:MOM) + MOVOL:400V , (CAPPRM:CE + MOVOL:500V , CAPPRM:MHLW + MOVOL:200V) + COOL:AIR) + FREQ:50HZ , ((CAPPRM:ASME , CAPPRM:MHLW) + MOVOL:460V , CAPPRM:ASME + COOL:WATER + MOVOL:380V) + FREQ:60HZ) + CAPPRE:IEC , ((MOVOL:230V , MOVOL:575V) + COOL:AIR , MOVOL:460V) + CAPPRE:ULCUL + CAPPRM:ASME + FREQ:60HZ)	Cubicle fan
	1089 9556 72	4	AIR INLET WITHOUT FILTER	**(25/02/2019 - 24/07/2019)** (((CAPPRM:AS1210 , CAPPRM:CE , CAPPRM:MHLW , CAPPRM:MOM) + FREQ:50HZ + MOVOL:400V , (MOVOL:380V , MOVOL:460V) + CAPPRM:ASME + FREQ:60HZ) + CAPPRE:IEC , CAPPRE:ULCUL + CAPPRM:ASME + FREQ:60HZ + MOVOL:460V) + COOL:WATER **(25/07/2019 - 27/11/2019)** ((((MOVOL:380V , MOVOL:460V) + CAPPRM:ASME , CAPPRM:MHLW + MOVOL:460V) + FREQ:60HZ , (CAPPRM:AS1210 , CAPPRM:CE , CAPPRM:MHLW , CAPPRM:MOM) + FREQ:50HZ + MOVOL:400V) + CAPPRE:IEC , CAPPRE:ULCUL + CAPPRM:ASME + FREQ:60HZ + MOVOL:460V) + COOL:WATER **(28/11/2019 - ...)** ((((CAPPRM:AS1210 , CAPPRM:CE , CAPPRM:MHLW , CAPPRM:MOM) + MOVOL:400V , (CAPPRM:CE + MOVOL:500V , CAPPRM:MHLW + MOVOL:200V) + COOL:AIR) + FREQ:50HZ , ((CAPPRM:ASME , CAPPRM:MHLW) + MOVOL:460V , CAPPRM:ASME + COOL:WATER + MOVOL:380V) + FREQ:60HZ) + CAPPRE:IEC , ((MOVOL:230V , MOVOL:575V) + COOL:AIR , MOVOL:460V) + CAPPRE:ULCUL + CAPPRM:ASME + FREQ:60HZ)	Filter grid

Legend:

CAPPRE:IEC - Component approval electrical:IEC
CAPPRE:ULCUL - Component approval electrical:UL/cUL
CAPPRM:AS1210 - Component approval mechanical:AS1210
CAPPRM:ASME - Component approval mechanical:ASME
CAPPRM:CE - Component approval mechanical:CE
CAPPRM:MHLW - Component approval mechanical:MHLW
CAPPRM:MOM - Component approval mechanical:MOM
COOL:AIR - Cooling:Air cooled
COOL:WATER - Cooling:Water cooled
FREQ:50HZ - Frequency:50 Hz
FREQ:60HZ - Frequency:60 Hz
IDRY:Y - Integrated dryer:Yes
MODEL:GA75VP_16 - Model:GA 75VSD+
MOVOL:200V - Supply voltage:200 V
MOVOL:230V - Supply voltage:230 V
MOVOL:380V - Supply voltage:380 V
MOVOL:400V - Supply voltage:400 V
MOVOL:460V - Supply voltage:460 V
MOVOL:500V - Supply voltage:500 V
MOVOL:575V - Supply voltage:575 V

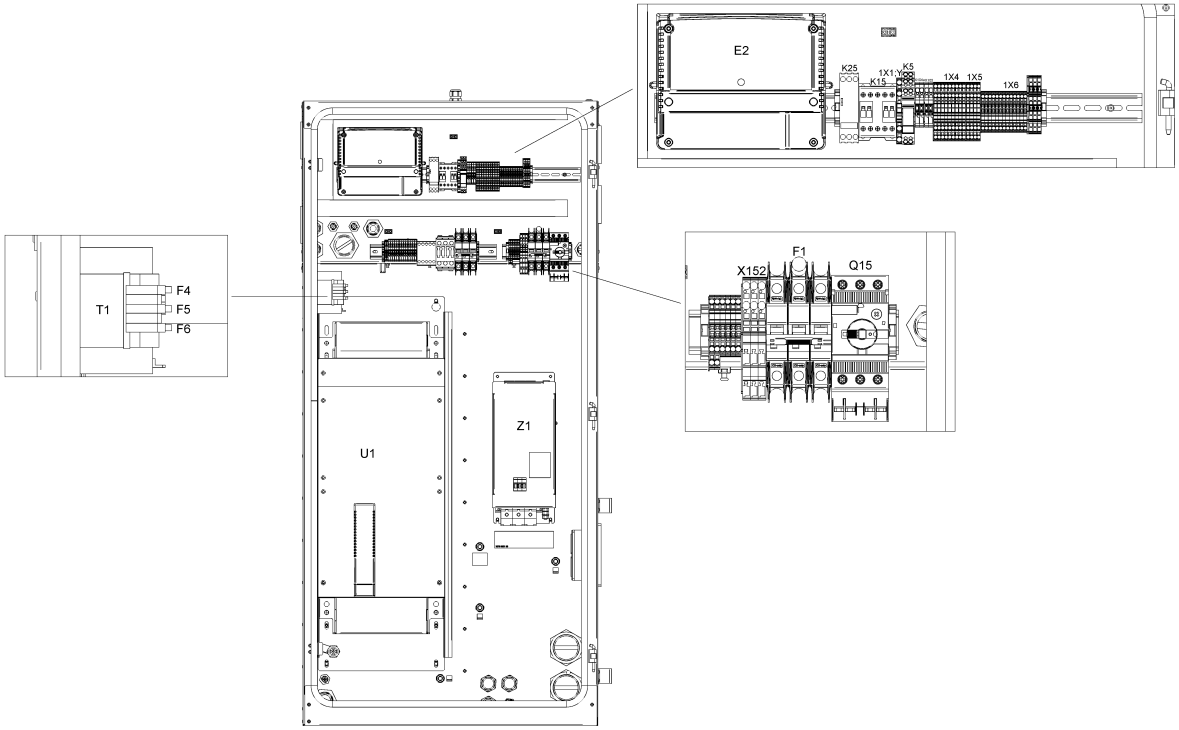
E2
K25
K15
1X1:Y
K5
1X4
1X5
1X6
T1
F4
F5
F6
U1
Z1
X152
F1
Q15

21.10 - Cubicle components GA 75L VSD+ - ((200V-400V-500V/50Hz, 460V/60Hz) - IEC, (230V-460V-575V/60Hz - UL-cUL)) - Full-Feature (28/11/2019 - ...)

(((MOVOL:200V , MOVOL:400V , MOVOL:500V) + FREQ:50HZ , FREQ:60HZ + MOVOL:460V) + CAPPRE:IEC , (MOVOL:230V , MOVOL:460V , MOVOL:575V) + CAPPRE:ULCUL + FREQ:60HZ) + IDRY:Y + MODEL:GA75VP_16

Ref	Part Number	Qty	Name	Validity	EL
	1088 0032 09	1	CONNECTOR	**(25/02/2019 - 24/07/2019)** (((CAPPRM:AS1210 , CAPPRM:CE , CAPPRM:MHLW , CAPPRM:MOM) + FREQ:50HZ + MOVOL:400V , (MOVOL:380V , MOVOL:460V) + CAPPRM:ASME + FREQ:60HZ) + CAPPRE:IEC , CAPPRE:ULCUL + CAPPRM:ASME + FREQ:60HZ + MOVOL:460V) + COOL:WATER **(25/07/2019 - 27/11/2019)** ((((MOVOL:380V , MOVOL:460V) + CAPPRM:ASME , CAPPRM:MHLW + MOVOL:460V) + FREQ:60HZ , (CAPPRM:AS1210 , CAPPRM:CE , CAPPRM:MHLW , CAPPRM:MOM) + FREQ:50HZ + MOVOL:400V) + CAPPRE:IEC , CAPPRE:ULCUL + CAPPRM:ASME + FREQ:60HZ + MOVOL:460V) + COOL:WATER **(28/11/2019 - ...)** ((((CAPPRM:AS1210 , CAPPRM:CE , CAPPRM:MHLW , CAPPRM:MOM) + MOVOL:400V , (CAPPRM:CE + MOVOL:500V , CAPPRM:MHLW + MOVOL:200V) + COOL:AIR) + FREQ:50HZ , ((CAPPRM:ASME , CAPPRM:MHLW) + MOVOL:460V , CAPPRM:ASME + COOL:WATER + MOVOL:380V) + FREQ:60HZ) + CAPPRE:IEC , ((MOVOL:230V , MOVOL:575V) + COOL:AIR , MOVOL:460V) + CAPPRE:ULCUL + CAPPRM:ASME + FREQ:60HZ)	X3
	1089 9572 05	1	LINE FILTER	**(25/02/2019 - 24/07/2019)** (((CAPPRM:AS1210 , CAPPRM:CE , CAPPRM:MHLW , CAPPRM:MOM) + FREQ:50HZ + MOVOL:400V , (MOVOL:380V , MOVOL:460V) + CAPPRM:ASME + FREQ:60HZ) + CAPPRE:IEC , CAPPRE:ULCUL + CAPPRM:ASME + FREQ:60HZ + MOVOL:460V) + COOL:WATER **(25/07/2019 - 27/11/2019)** ((((MOVOL:380V , MOVOL:460V) + CAPPRM:ASME , CAPPRM:MHLW + MOVOL:460V) + FREQ:60HZ , (CAPPRM:AS1210 , CAPPRM:CE , CAPPRM:MHLW , CAPPRM:MOM) + FREQ:50HZ + MOVOL:400V) + CAPPRE:IEC , CAPPRE:ULCUL + CAPPRM:ASME + FREQ:60HZ + MOVOL:460V) + COOL:WATER **(28/11/2019 - ...)** ((((CAPPRM:AS1210 , CAPPRM:CE , CAPPRM:MHLW , CAPPRM:MOM) + MOVOL:400V , (CAPPRM:CE + MOVOL:500V , CAPPRM:MHLW + MOVOL:200V) + COOL:AIR) + FREQ:50HZ , ((CAPPRM:ASME , CAPPRM:MHLW) + MOVOL:460V , CAPPRM:ASME + COOL:WATER + MOVOL:380V) + FREQ:60HZ) + CAPPRE:IEC , ((MOVOL:230V , MOVOL:575V) + COOL:AIR , MOVOL:460V) + CAPPRE:ULCUL + CAPPRM:ASME + FREQ:60HZ)	Z1 for 75 kw

Electrical legend: Z1 for 75 kw

Legend:

CAPPRE:IEC - Component approval electrical:IEC
CAPPRE:ULCUL - Component approval electrical:UL/cUL
CAPPRM:AS1210 - Component approval mechanical:AS1210
CAPPRM:ASME - Component approval mechanical:ASME
CAPPRM:CE - Component approval mechanical:CE
CAPPRM:MHLW - Component approval mechanical:MHLW
CAPPRM:MOM - Component approval mechanical:MOM
COOL:AIR - Cooling:Air cooled
COOL:WATER - Cooling:Water cooled
FREQ:50HZ - Frequency:50 Hz
FREQ:60HZ - Frequency:60 Hz
IDRY:Y - Integrated dryer:Yes
MODEL:GA75VP_16 - Model:GA 75VSD+
MOVOL:200V - Supply voltage:200 V
MOVOL:230V - Supply voltage:230 V
MOVOL:380V - Supply voltage:380 V
MOVOL:400V - Supply voltage:400 V
MOVOL:460V - Supply voltage:460 V
MOVOL:500V - Supply voltage:500 V
MOVOL:575V - Supply voltage:575 V

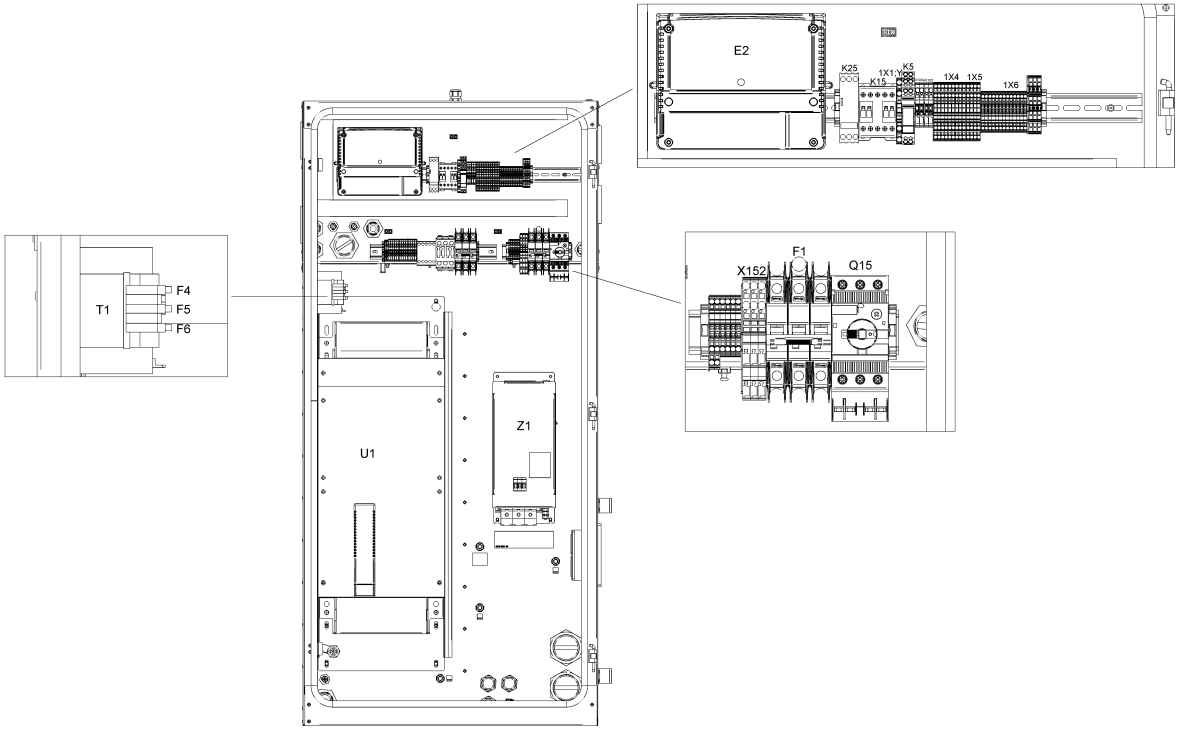
E2
K25
K15
1X1:Y
K5
1X4
1X5
1X6
T1
F4
F5
F6
U1
Z1
X152
F1
Q15

21.10 - Cubicle components GA 75L VSD+ - ((200V-400V-500V/50Hz, 460V/60Hz) - IEC, (230V-460V-575V/60Hz - UL-cUL)) - Full-Feature (28/11/2019 - ...)

(((MOVOL:200V , MOVOL:400V , MOVOL:500V) + FREQ:50HZ , FREQ:60HZ + MOVOL:460V) + CAPPRE:IEC , (MOVOL:230V , MOVOL:460V , MOVOL:575V) + CAPPRE:ULCUL + FREQ:60HZ) + IDRY:Y + MODEL:GA75VP_16

Ref	Part Number	Qty	Name	Validity	EL
	1089 9562 04	1	STRAP	**(25/02/2019 - 24/07/2019)** (((CAPPRM:AS1210 , CAPPRM:CE , CAPPRM:MHLW , CAPPRM:MOM) + FREQ:50HZ + MOVOL:400V , (MOVOL:380V , MOVOL:460V) + CAPPRM:ASME + FREQ:60HZ) + CAPPRE:IEC , CAPPRE:ULCUL + CAPPRM:ASME + FREQ:60HZ + MOVOL:460V) + COOL:WATER **(25/07/2019 - 27/11/2019)** ((((MOVOL:380V , MOVOL:460V) + CAPPRM:ASME , CAPPRM:MHLW + MOVOL:460V) + FREQ:60HZ , (CAPPRM:AS1210 , CAPPRM:CE , CAPPRM:MHLW , CAPPRM:MOM) + FREQ:50HZ + MOVOL:400V) + CAPPRE:IEC , CAPPRE:ULCUL + CAPPRM:ASME + FREQ:60HZ + MOVOL:460V) + COOL:WATER **(28/11/2019 - ...)** ((((CAPPRM:AS1210 , CAPPRM:CE , CAPPRM:MHLW , CAPPRM:MOM) + MOVOL:400V , (CAPPRM:CE + MOVOL:500V , CAPPRM:MHLW + MOVOL:200V) + COOL:AIR) + FREQ:50HZ , ((CAPPRM:ASME , CAPPRM:MHLW) + MOVOL:460V , CAPPRM:ASME + COOL:WATER + MOVOL:380V) + FREQ:60HZ) + CAPPRE:IEC , ((MOVOL:230V , MOVOL:575V) + COOL:AIR , MOVOL:460V) + CAPPRE:ULCUL + CAPPRM:ASME + FREQ:60HZ)	HF-screen
	1089 9514 56	1	TRANSFORMER	**(25/02/2019 - 24/07/2019)** (((CAPPRM:AS1210 , CAPPRM:CE , CAPPRM:MHLW , CAPPRM:MOM) + FREQ:50HZ + MOVOL:400V , (MOVOL:380V , MOVOL:460V) + CAPPRM:ASME + FREQ:60HZ) + CAPPRE:IEC , CAPPRE:ULCUL + CAPPRM:ASME + FREQ:60HZ + MOVOL:460V) + COOL:WATER **(25/07/2019 - 27/11/2019)** ((((MOVOL:380V , MOVOL:460V) + CAPPRM:ASME , CAPPRM:MHLW + MOVOL:460V) + FREQ:60HZ , (CAPPRM:AS1210 , CAPPRM:CE , CAPPRM:MHLW , CAPPRM:MOM) + FREQ:50HZ + MOVOL:400V) + CAPPRE:IEC , CAPPRE:ULCUL + CAPPRM:ASME + FREQ:60HZ + MOVOL:460V) + COOL:WATER **(28/11/2019 - ...)** ((((CAPPRM:AS1210 , CAPPRM:CE , CAPPRM:MHLW , CAPPRM:MOM) + MOVOL:400V , (CAPPRM:CE + MOVOL:500V , CAPPRM:MHLW + MOVOL:200V) + COOL:AIR) + FREQ:50HZ , ((CAPPRM:ASME , CAPPRM:MHLW) + MOVOL:460V , CAPPRM:ASME + COOL:WATER + MOVOL:380V) + FREQ:60HZ) + CAPPRE:IEC , ((MOVOL:230V , MOVOL:575V) + COOL:AIR , MOVOL:460V) + CAPPRE:ULCUL + CAPPRM:ASME + FREQ:60HZ)	T1

Legend:

CAPPRE:IEC - Component approval electrical:IEC
CAPPRE:ULCUL - Component approval electrical:UL/cUL
CAPPRM:AS1210 - Component approval mechanical:AS1210
CAPPRM:ASME - Component approval mechanical:ASME
CAPPRM:CE - Component approval mechanical:CE
CAPPRM:MHLW - Component approval mechanical:MHLW
CAPPRM:MOM - Component approval mechanical:MOM
COOL:AIR - Cooling:Air cooled
COOL:WATER - Cooling:Water cooled
FREQ:50HZ - Frequency:50 Hz
FREQ:60HZ - Frequency:60 Hz
IDRY:Y - Integrated dryer:Yes
MODEL:GA75VP_16 - Model:GA 75VSD+
MOVOL:200V - Supply voltage:200 V
MOVOL:230V - Supply voltage:230 V
MOVOL:380V - Supply voltage:380 V
MOVOL:400V - Supply voltage:400 V
MOVOL:460V - Supply voltage:460 V
MOVOL:500V - Supply voltage:500 V
MOVOL:575V - Supply voltage:575 V

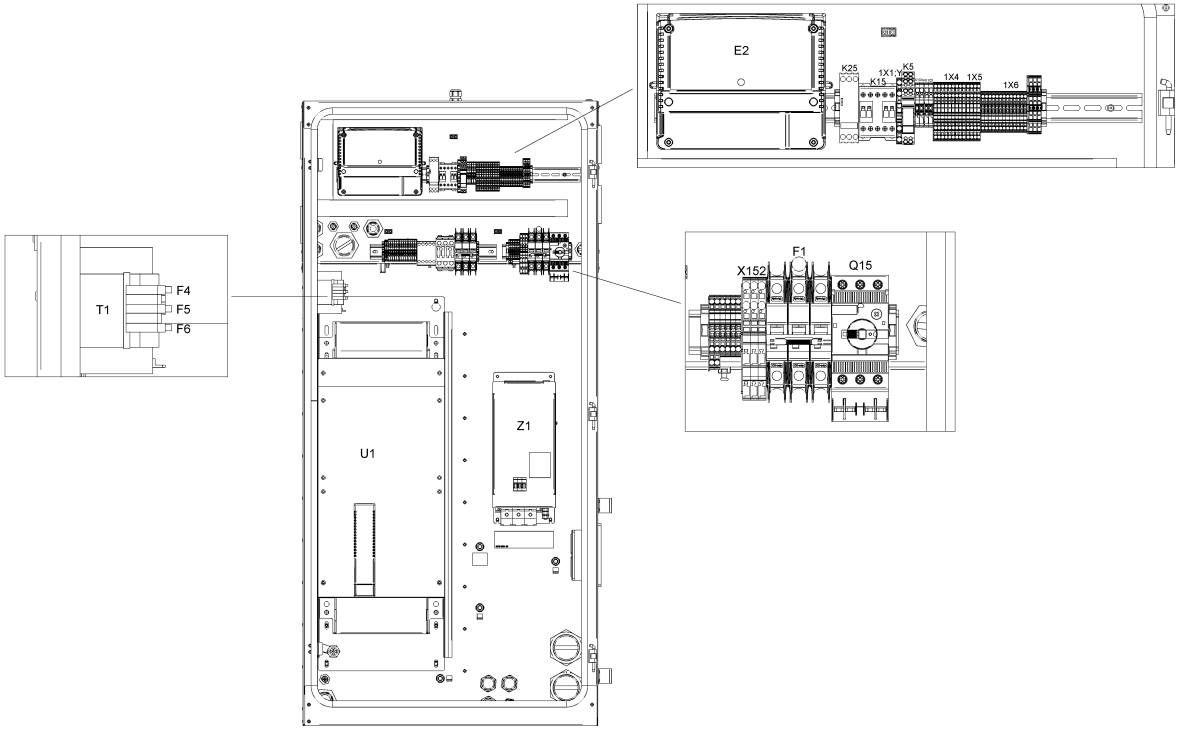
E2
K25
K15
1X1:Y
K5
1X4
1X5
1X6
T1
F4
F5
F6
U1
Z1
X152
F1
Q15

21.10 - Cubicle components GA 75L VSD+ - ((200V-400V-500V/50Hz, 460V/60Hz) - IEC, (230V-460V-575V/60Hz - UL-cUL)) - Full-Feature (28/11/2019 - ...)

(((MOVOL:200V , MOVOL:400V , MOVOL:500V) + FREQ:50HZ , FREQ:60HZ + MOVOL:460V) + CAPPRE:IEC , (MOVOL:230V , MOVOL:460V , MOVOL:575V) + CAPPRE:ULCUL + FREQ:60HZ) + IDRY:Y + MODEL:GA75VP_16

Ref	Part Number	Qty	Name	Validity	EL
	1089 9522 26	1	CIRCUIT BREAKER	**(25/02/2019 - 24/07/2019)** (((CAPPRM:AS1210 , CAPPRM:CE , CAPPRM:MHLW , CAPPRM:MOM) + FREQ:50HZ + MOVOL:400V , (MOVOL:380V , MOVOL:460V) + CAPPRM:ASME + FREQ:60HZ) + CAPPRE:IEC , CAPPRE:ULCUL + CAPPRM:ASME + FREQ:60HZ + MOVOL:460V) + COOL:WATER **(25/07/2019 - 27/11/2019)** ((((MOVOL:380V , MOVOL:460V) + CAPPRM:ASME , CAPPRM:MHLW + MOVOL:460V) + FREQ:60HZ , (CAPPRM:AS1210 , CAPPRM:CE , CAPPRM:MHLW , CAPPRM:MOM) + FREQ:50HZ + MOVOL:400V) + CAPPRE:IEC , CAPPRE:ULCUL + CAPPRM:ASME + FREQ:60HZ + MOVOL:460V) + COOL:WATER **(28/11/2019 - ...)** ((((CAPPRM:AS1210 , CAPPRM:CE , CAPPRM:MHLW , CAPPRM:MOM) + MOVOL:400V , (CAPPRM:CE + MOVOL:500V , CAPPRM:MHLW + MOVOL:200V) + COOL:AIR) + FREQ:50HZ , ((CAPPRM:ASME , CAPPRM:MHLW) + MOVOL:460V , CAPPRM:ASME + COOL:WATER + MOVOL:380V) + FREQ:60HZ) + CAPPRE:IEC , ((MOVOL:230V , MOVOL:575V) + COOL:AIR , MOVOL:460V) + CAPPRE:ULCUL + CAPPRM:ASME + FREQ:60HZ)	F1
	1089 9513 41	1	PUSH BUTTON	**(25/02/2019 - 24/07/2019)** (((CAPPRM:AS1210 , CAPPRM:CE , CAPPRM:MHLW , CAPPRM:MOM) + FREQ:50HZ + MOVOL:400V , (MOVOL:380V , MOVOL:460V) + CAPPRM:ASME + FREQ:60HZ) + CAPPRE:IEC , CAPPRE:ULCUL + CAPPRM:ASME + FREQ:60HZ + MOVOL:460V) + COOL:WATER **(25/07/2019 - 27/11/2019)** ((((MOVOL:380V , MOVOL:460V) + CAPPRM:ASME , CAPPRM:MHLW + MOVOL:460V) + FREQ:60HZ , (CAPPRM:AS1210 , CAPPRM:CE , CAPPRM:MHLW , CAPPRM:MOM) + FREQ:50HZ + MOVOL:400V) + CAPPRE:IEC , CAPPRE:ULCUL + CAPPRM:ASME + FREQ:60HZ + MOVOL:460V) + COOL:WATER **(28/11/2019 - ...)** ((((CAPPRM:AS1210 , CAPPRM:CE , CAPPRM:MHLW , CAPPRM:MOM) + MOVOL:400V , (CAPPRM:CE + MOVOL:500V , CAPPRM:MHLW + MOVOL:200V) + COOL:AIR) + FREQ:50HZ , ((CAPPRM:ASME , CAPPRM:MHLW) + MOVOL:460V , CAPPRM:ASME + COOL:WATER + MOVOL:380V) + FREQ:60HZ) + CAPPRE:IEC , ((MOVOL:230V , MOVOL:575V) + COOL:AIR , MOVOL:460V) + CAPPRE:ULCUL + CAPPRM:ASME + FREQ:60HZ)	S3

Legend:

CAPPRE:IEC - Component approval electrical:IEC
CAPPRE:ULCUL - Component approval electrical:UL/cUL
CAPPRM:AS1210 - Component approval mechanical:AS1210
CAPPRM:ASME - Component approval mechanical:ASME
CAPPRM:CE - Component approval mechanical:CE
CAPPRM:MHLW - Component approval mechanical:MHLW
CAPPRM:MOM - Component approval mechanical:MOM
COOL:AIR - Cooling:Air cooled
COOL:WATER - Cooling:Water cooled
FREQ:50HZ - Frequency:50 Hz
FREQ:60HZ - Frequency:60 Hz
IDRY:Y - Integrated dryer:Yes
MODEL:GA75VP_16 - Model:GA 75VSD+
MOVOL:200V - Supply voltage:200 V
MOVOL:230V - Supply voltage:230 V
MOVOL:380V - Supply voltage:380 V
MOVOL:400V - Supply voltage:400 V
MOVOL:460V - Supply voltage:460 V
MOVOL:500V - Supply voltage:500 V
MOVOL:575V - Supply voltage:575 V

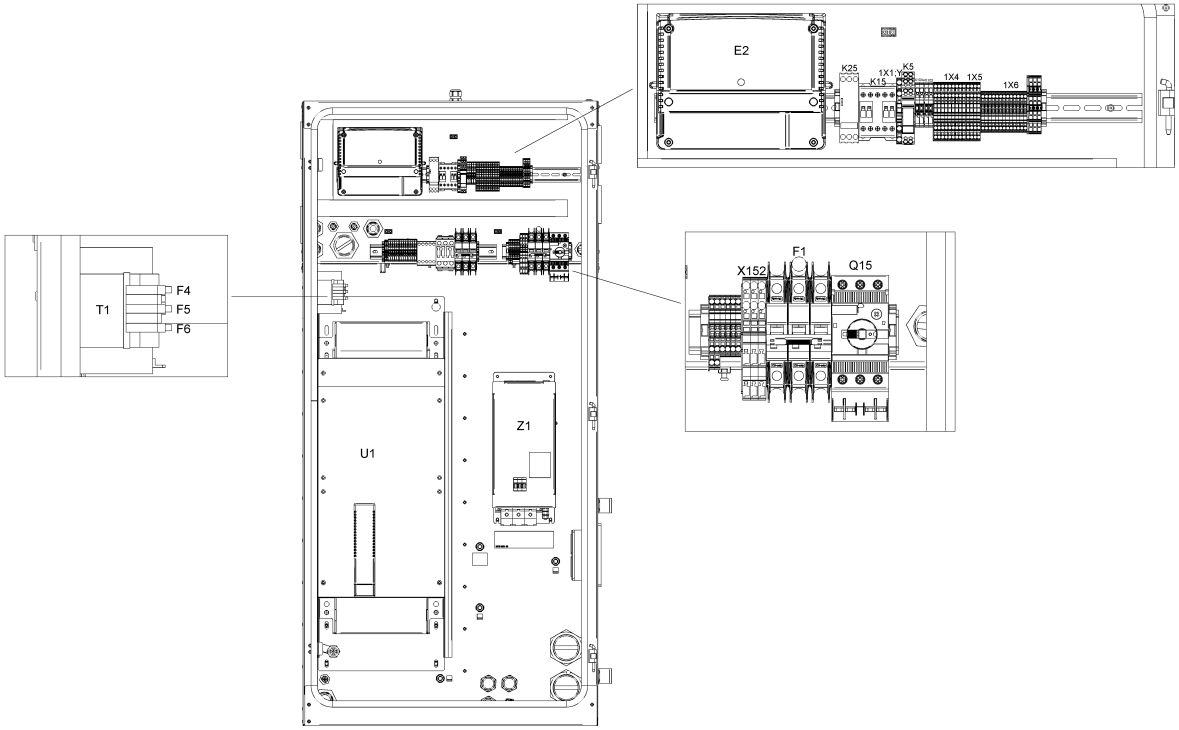
E2
K25
K15
1X1:Y
K5
1X4
1X5
1X6
T1
F4
F5
F6
U1
Z1
X152
F1
Q15

21.10 - Cubicle components GA 75L VSD+ - ((200V-400V-500V/50Hz, 460V/60Hz) - IEC, (230V-460V-575V/60Hz - UL-cUL)) - Full-Feature (28/11/2019 - ...)

(((MOVOL:200V , MOVOL:400V , MOVOL:500V) + FREQ:50HZ , FREQ:60HZ + MOVOL:460V) + CAPPRE:IEC , (MOVOL:230V , MOVOL:460V , MOVOL:575V) + CAPPRE:ULCUL + FREQ:60HZ) + IDRY:Y + MODEL:GA75VP_16

Ref	Part Number	Qty	Name	Validity	EL
	1089 9513 28	1	HOLDER	**(25/02/2019 - 24/07/2019)** (((CAPPRM:AS1210 , CAPPRM:CE , CAPPRM:MHLW , CAPPRM:MOM) + FREQ:50HZ + MOVOL:400V , (MOVOL:380V , MOVOL:460V) + CAPPRM:ASME + FREQ:60HZ) + CAPPRE:IEC , CAPPRE:ULCUL + CAPPRM:ASME + FREQ:60HZ + MOVOL:460V) + COOL:WATER **(25/07/2019 - 27/11/2019)** ((((MOVOL:380V , MOVOL:460V) + CAPPRM:ASME , CAPPRM:MHLW + MOVOL:460V) + FREQ:60HZ , (CAPPRM:AS1210 , CAPPRM:CE , CAPPRM:MHLW , CAPPRM:MOM) + FREQ:50HZ + MOVOL:400V) + CAPPRE:IEC , CAPPRE:ULCUL + CAPPRM:ASME + FREQ:60HZ + MOVOL:460V) + COOL:WATER **(28/11/2019 - ...)** ((((CAPPRM:AS1210 , CAPPRM:CE , CAPPRM:MHLW , CAPPRM:MOM) + MOVOL:400V , (CAPPRM:CE + MOVOL:500V , CAPPRM:MHLW + MOVOL:200V) + COOL:AIR) + FREQ:50HZ , ((CAPPRM:ASME , CAPPRM:MHLW) + MOVOL:460V , CAPPRM:ASME + COOL:WATER + MOVOL:380V) + FREQ:60HZ) + CAPPRE:IEC , ((MOVOL:230V , MOVOL:575V) + COOL:AIR , MOVOL:460V) + CAPPRE:ULCUL + CAPPRM:ASME + FREQ:60HZ)	S3
	~~1089 9513 30~~	4	CONTACTOR	**(25/02/2019 - 24/07/2019)** (((CAPPRM:AS1210 , CAPPRM:CE , CAPPRM:MHLW , CAPPRM:MOM) + FREQ:50HZ + MOVOL:400V , (MOVOL:380V , MOVOL:460V) + CAPPRM:ASME + FREQ:60HZ) + CAPPRE:IEC , CAPPRE:ULCUL + CAPPRM:ASME + FREQ:60HZ + MOVOL:460V) + COOL:WATER **(25/07/2019 - 27/11/2019)** ((((MOVOL:380V , MOVOL:460V) + CAPPRM:ASME , CAPPRM:MHLW + MOVOL:460V) + FREQ:60HZ , (CAPPRM:AS1210 , CAPPRM:CE , CAPPRM:MHLW , CAPPRM:MOM) + FREQ:50HZ + MOVOL:400V) + CAPPRE:IEC , CAPPRE:ULCUL + CAPPRM:ASME + FREQ:60HZ + MOVOL:460V) + COOL:WATER **(28/11/2019 - ...)** ((((CAPPRM:AS1210 , CAPPRM:CE , CAPPRM:MHLW , CAPPRM:MOM) + MOVOL:400V , (CAPPRM:CE + MOVOL:500V , CAPPRM:MHLW + MOVOL:200V) + COOL:AIR) + FREQ:50HZ , ((CAPPRM:ASME , CAPPRM:MHLW) + MOVOL:460V , CAPPRM:ASME + COOL:WATER + MOVOL:380V) + FREQ:60HZ) + CAPPRE:IEC , ((MOVOL:230V , MOVOL:575V) + COOL:AIR , MOVOL:460V) + CAPPRE:ULCUL + CAPPRM:ASME + FREQ:60HZ)	S3
	Substituted by:	1089 9513 04 - CONTACT BLOCK (quantity: 1)			

Legend:

CAPPRE:IEC - Component approval electrical:IEC
CAPPRE:ULCUL - Component approval electrical:UL/cUL
CAPPRM:AS1210 - Component approval mechanical:AS1210
CAPPRM:ASME - Component approval mechanical:ASME
CAPPRM:CE - Component approval mechanical:CE
CAPPRM:MHLW - Component approval mechanical:MHLW
CAPPRM:MOM - Component approval mechanical:MOM
COOL:AIR - Cooling:Air cooled
COOL:WATER - Cooling:Water cooled
FREQ:50HZ - Frequency:50 Hz
FREQ:60HZ - Frequency:60 Hz
IDRY:Y - Integrated dryer:Yes
MODEL:GA75VP_16 - Model:GA 75VSD+
MOVOL:200V - Supply voltage:200 V
MOVOL:230V - Supply voltage:230 V
MOVOL:380V - Supply voltage:380 V
MOVOL:400V - Supply voltage:400 V
MOVOL:460V - Supply voltage:460 V
MOVOL:500V - Supply voltage:500 V
MOVOL:575V - Supply voltage:575 V

21.10 - Cubicle components GA 75L VSD+ - ((200V-400V-500V/50Hz, 460V/60Hz) - IEC, (230V-460V-575V/60Hz - UL-cUL)) - Full-Feature (28/11/2019 - ...)

(((MOVOL:200V , MOVOL:400V , MOVOL:500V) + FREQ:50HZ , FREQ:60HZ + MOVOL:460V) + CAPPRE:IEC , (MOVOL:230V , MOVOL:460V , MOVOL:575V) + CAPPRE:ULCUL + FREQ:60HZ) + IDRY:Y + MODEL:GA75VP_16

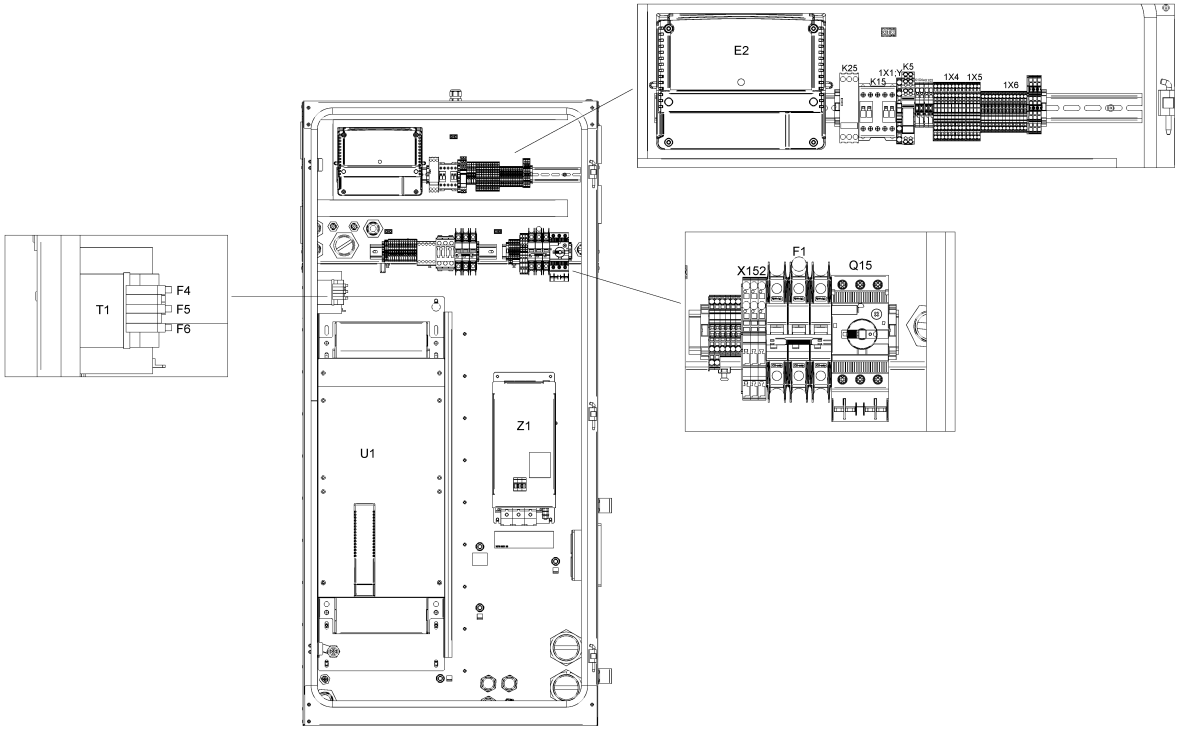

21.10 - Cubicle components GA 75L VSD+ - ((200V-400V-500V/50Hz, 460V/60Hz) - IEC, (230V-460V-575V/60Hz - UL-cUL)) - Full-Feature (28/11/2019 - ...)

(((MOVOL:200V , MOVOL:400V , MOVOL:500V) + FREQ:50HZ , FREQ:60HZ + MOVOL:460V) + CAPPRE:IEC , (MOVOL:230V , MOVOL:460V , MOVOL:575V) + CAPPRE:ULCUL + FREQ:60HZ) + IDRY:Y + MODEL:GA75VP_16

Ref	Part Number	Qty	Name	Validity	EL
	1088 0039 07	3	TERMINAL	**(25/02/2019 - 24/07/2019)** (((CAPPRM:AS1210 , CAPPRM:CE , CAPPRM:MHLW , CAPPRM:MOM) + FREQ:50HZ + MOVOL:400V , (MOVOL:380V , MOVOL:460V) + CAPPRM:ASME + FREQ:60HZ) + CAPPRE:IEC , CAPPRE:ULCUL + CAPPRM:ASME + FREQ:60HZ + MOVOL:460V) + COOL:WATER **(25/07/2019 - 27/11/2019)** ((((MOVOL:380V , MOVOL:460V) + CAPPRM:ASME , CAPPRM:MHLW + MOVOL:460V) + FREQ:60HZ , (CAPPRM:AS1210 , CAPPRM:CE , CAPPRM:MHLW , CAPPRM:MOM) + FREQ:50HZ + MOVOL:400V) + CAPPRE:IEC , CAPPRE:ULCUL + CAPPRM:ASME + FREQ:60HZ + MOVOL:460V) + COOL:WATER **(28/11/2019 - ...)** ((((CAPPRM:AS1210 , CAPPRM:CE , CAPPRM:MHLW , CAPPRM:MOM) + MOVOL:400V , (CAPPRM:CE + MOVOL:500V , CAPPRM:MHLW + MOVOL:200V) + COOL:AIR) + FREQ:50HZ , ((CAPPRM:ASME , CAPPRM:MHLW) + MOVOL:460V , CAPPRM:ASME + COOL:WATER + MOVOL:380V) + FREQ:60HZ) + CAPPRE:IEC , ((MOVOL:230V , MOVOL:575V) + COOL:AIR , MOVOL:460V) + CAPPRE:ULCUL + CAPPRM:ASME + FREQ:60HZ)	X152
	1088 0039 05	1	PLATE	**(25/02/2019 - 24/07/2019)** (((CAPPRM:AS1210 , CAPPRM:CE , CAPPRM:MHLW , CAPPRM:MOM) + FREQ:50HZ + MOVOL:400V , (MOVOL:380V , MOVOL:460V) + CAPPRM:ASME + FREQ:60HZ) + CAPPRE:IEC , CAPPRE:ULCUL + CAPPRM:ASME + FREQ:60HZ + MOVOL:460V) + COOL:WATER **(25/07/2019 - 27/11/2019)** ((((MOVOL:380V , MOVOL:460V) + CAPPRM:ASME , CAPPRM:MHLW + MOVOL:460V) + FREQ:60HZ , (CAPPRM:AS1210 , CAPPRM:CE , CAPPRM:MHLW , CAPPRM:MOM) + FREQ:50HZ + MOVOL:400V) + CAPPRE:IEC , CAPPRE:ULCUL + CAPPRM:ASME + FREQ:60HZ + MOVOL:460V) + COOL:WATER **(28/11/2019 - ...)** ((((CAPPRM:AS1210 , CAPPRM:CE , CAPPRM:MHLW , CAPPRM:MOM) + MOVOL:400V , (CAPPRM:CE + MOVOL:500V , CAPPRM:MHLW + MOVOL:200V) + COOL:AIR) + FREQ:50HZ , ((CAPPRM:ASME , CAPPRM:MHLW) + MOVOL:460V , CAPPRM:ASME + COOL:WATER + MOVOL:380V) + FREQ:60HZ) + CAPPRE:IEC , ((MOVOL:230V , MOVOL:575V) + COOL:AIR , MOVOL:460V) + CAPPRE:ULCUL + CAPPRM:ASME + FREQ:60HZ)	X152

Legend:

CAPPRE:IEC - Component approval electrical:IEC
CAPPRE:ULCUL - Component approval electrical:UL/cUL
CAPPRM:AS1210 - Component approval mechanical:AS1210
CAPPRM:ASME - Component approval mechanical:ASME
CAPPRM:CE - Component approval mechanical:CE
CAPPRM:MHLW - Component approval mechanical:MHLW
CAPPRM:MOM - Component approval mechanical:MOM
COOL:AIR - Cooling:Air cooled
COOL:WATER - Cooling:Water cooled
FREQ:50HZ - Frequency:50 Hz
FREQ:60HZ - Frequency:60 Hz
IDRY:Y - Integrated dryer:Yes
MODEL:GA75VP_16 - Model:GA 75VSD+
MOVOL:200V - Supply voltage:200 V
MOVOL:230V - Supply voltage:230 V
MOVOL:380V - Supply voltage:380 V
MOVOL:400V - Supply voltage:400 V
MOVOL:460V - Supply voltage:460 V
MOVOL:500V - Supply voltage:500 V
MOVOL:575V - Supply voltage:575 V

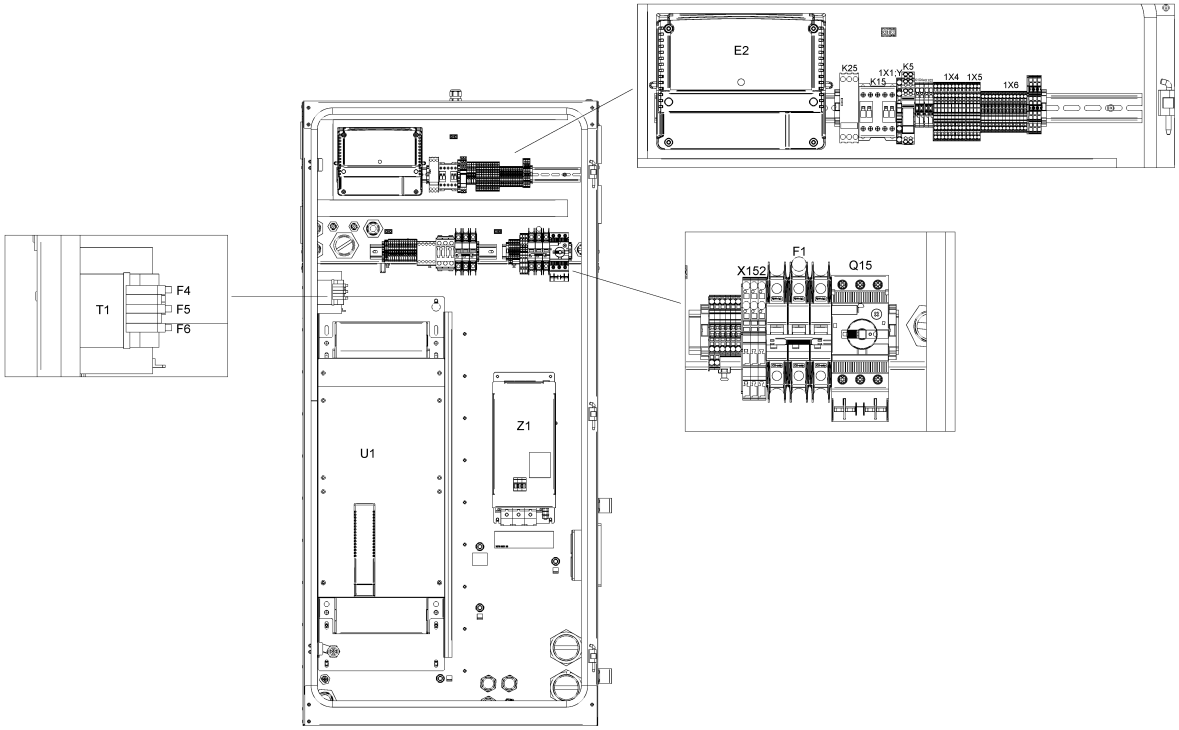
E2
K25
K15
1X1:Y
K5
1X4
1X5
1X6
T1
F4
F5
F6
U1
Z1
X152
F1
Q15

21.10 - Cubicle components GA 75L VSD+ - ((200V-400V-500V/50Hz, 460V/60Hz) - IEC, (230V-460V-575V/60Hz - UL-cUL)) - Full-Feature (28/11/2019 - ...)

(((MOVOL:200V , MOVOL:400V , MOVOL:500V) + FREQ:50HZ , FREQ:60HZ + MOVOL:460V) + CAPPRE:IEC , (MOVOL:230V , MOVOL:460V , MOVOL:575V) + CAPPRE:ULCUL + FREQ:60HZ) + IDRY:Y + MODEL:GA75VP_16

Ref	Part Number	Qty	Name	Validity	EL
	1088 0039 26	1	CONNECTOR	**(25/02/2019 - 24/07/2019)** (((CAPPRM:AS1210 , CAPPRM:CE , CAPPRM:MHLW , CAPPRM:MOM) + FREQ:50HZ + MOVOL:400V , (MOVOL:380V , MOVOL:460V) + CAPPRM:ASME + FREQ:60HZ) + CAPPRE:IEC , CAPPRE:ULCUL + CAPPRM:ASME + FREQ:60HZ + MOVOL:460V) + COOL:WATER **(25/07/2019 - 27/11/2019)** ((((MOVOL:380V , MOVOL:460V) + CAPPRM:ASME , CAPPRM:MHLW + MOVOL:460V) + FREQ:60HZ , (CAPPRM:AS1210 , CAPPRM:CE , CAPPRM:MHLW , CAPPRM:MOM) + FREQ:50HZ + MOVOL:400V) + CAPPRE:IEC , CAPPRE:ULCUL + CAPPRM:ASME + FREQ:60HZ + MOVOL:460V) + COOL:WATER **(28/11/2019 - ...)** ((((CAPPRM:AS1210 , CAPPRM:CE , CAPPRM:MHLW , CAPPRM:MOM) + MOVOL:400V , (CAPPRM:CE + MOVOL:500V , CAPPRM:MHLW + MOVOL:200V) + COOL:AIR) + FREQ:50HZ , ((CAPPRM:ASME , CAPPRM:MHLW) + MOVOL:460V , CAPPRM:ASME + COOL:WATER + MOVOL:380V) + FREQ:60HZ) + CAPPRE:IEC , ((MOVOL:230V , MOVOL:575V) + COOL:AIR , MOVOL:460V) + CAPPRE:ULCUL + CAPPRM:ASME + FREQ:60HZ)	
	Electrical legend:	X152 (remove coding pin 1,3)			
	1088 0037 99	4	PIN	**(25/02/2019 - 24/07/2019)** (((CAPPRM:AS1210 , CAPPRM:CE , CAPPRM:MHLW , CAPPRM:MOM) + FREQ:50HZ + MOVOL:400V , (MOVOL:380V , MOVOL:460V) + CAPPRM:ASME + FREQ:60HZ) + CAPPRE:IEC , CAPPRE:ULCUL + CAPPRM:ASME + FREQ:60HZ + MOVOL:460V) + COOL:WATER **(25/07/2019 - 27/11/2019)** ((((MOVOL:380V , MOVOL:460V) + CAPPRM:ASME , CAPPRM:MHLW + MOVOL:460V) + FREQ:60HZ , (CAPPRM:AS1210 , CAPPRM:CE , CAPPRM:MHLW , CAPPRM:MOM) + FREQ:50HZ + MOVOL:400V) + CAPPRE:IEC , CAPPRE:ULCUL + CAPPRM:ASME + FREQ:60HZ + MOVOL:460V) + COOL:WATER **(28/11/2019 - ...)** ((((CAPPRM:AS1210 , CAPPRM:CE , CAPPRM:MHLW , CAPPRM:MOM) + MOVOL:400V , (CAPPRM:CE + MOVOL:500V , CAPPRM:MHLW + MOVOL:200V) + COOL:AIR) + FREQ:50HZ , ((CAPPRM:ASME , CAPPRM:MHLW) + MOVOL:460V , CAPPRM:ASME + COOL:WATER + MOVOL:380V) + FREQ:60HZ) + CAPPRE:IEC , ((MOVOL:230V , MOVOL:575V) + COOL:AIR , MOVOL:460V) + CAPPRE:ULCUL + CAPPRM:ASME + FREQ:60HZ)	X152:1; 3

Legend:

CAPPRE:IEC - Component approval electrical:IEC
CAPPRE:ULCUL - Component approval electrical:UL/cUL
CAPPRM:AS1210 - Component approval mechanical:AS1210
CAPPRM:ASME - Component approval mechanical:ASME
CAPPRM:CE - Component approval mechanical:CE
CAPPRM:MHLW - Component approval mechanical:MHLW
CAPPRM:MOM - Component approval mechanical:MOM
COOL:AIR - Cooling:Air cooled
COOL:WATER - Cooling:Water cooled
FREQ:50HZ - Frequency:50 Hz
FREQ:60HZ - Frequency:60 Hz
IDRY:Y - Integrated dryer:Yes
MODEL:GA75VP_16 - Model:GA 75VSD+
MOVOL:200V - Supply voltage:200 V
MOVOL:230V - Supply voltage:230 V
MOVOL:380V - Supply voltage:380 V
MOVOL:400V - Supply voltage:400 V
MOVOL:460V - Supply voltage:460 V
MOVOL:500V - Supply voltage:500 V
MOVOL:575V - Supply voltage:575 V

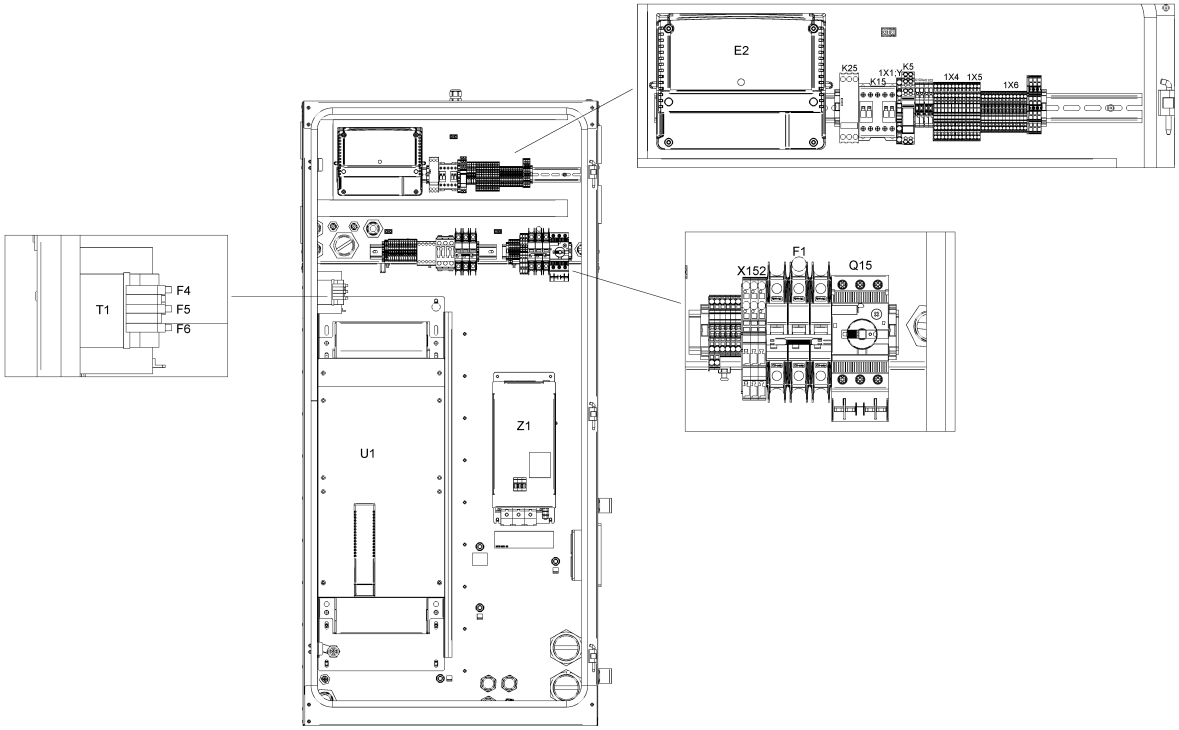
E2
K25
K15
1X1:Y
K5
1X4
1X5
1X6
T1
F4
F5
F6
U1
Z1
X152
F1
Q15

Ref	Part Number	Qty	Name	Validity	EL
	~~1088 0031 81~~	7	END STOP BRACKET 6MM	**(25/02/2019 - 24/07/2019)** (((CAPPRM:AS1210 , CAPPRM:CE , CAPPRM:MHLW , CAPPRM:MOM) + FREQ:50HZ + MOVOL:400V , (MOVOL:380V , MOVOL:460V) + CAPPRM:ASME + FREQ:60HZ) + CAPPRE:IEC , CAPPRE:ULCUL + CAPPRM:ASME + FREQ:60HZ + MOVOL:460V) + COOL:WATER **(25/07/2019 - 27/11/2019)** ((((MOVOL:380V , MOVOL:460V) + CAPPRM:ASME , CAPPRM:MHLW + MOVOL:460V) + FREQ:60HZ , (CAPPRM:AS1210 , CAPPRM:CE , CAPPRM:MHLW , CAPPRM:MOM) + FREQ:50HZ + MOVOL:400V) + CAPPRE:IEC , CAPPRE:ULCUL + CAPPRM:ASME + FREQ:60HZ + MOVOL:460V) + COOL:WATER **(28/11/2019 - ...)** ((((CAPPRM:AS1210 , CAPPRM:CE , CAPPRM:MHLW , CAPPRM:MOM) + MOVOL:400V , (CAPPRM:CE + MOVOL:500V , CAPPRM:MHLW + MOVOL:200V) + COOL:AIR) + FREQ:50HZ , ((CAPPRM:ASME , CAPPRM:MHLW) + MOVOL:460V , CAPPRM:ASME + COOL:WATER + MOVOL:380V) + FREQ:60HZ) + CAPPRE:IEC , ((MOVOL:230V , MOVOL:575V) + COOL:AIR , MOVOL:460V) + CAPPRE:ULCUL + CAPPRM:ASME + FREQ:60HZ)	
	Electrical legend:	Connector/terminal rail			
	Substituted by:	1089 0577 82 - END RETAINER (quantity: 1)			
	1088 0039 38	2	TERMINAL	**(25/02/2019 - 24/07/2019)** (((CAPPRM:AS1210 , CAPPRM:CE , CAPPRM:MHLW , CAPPRM:MOM) + FREQ:50HZ + MOVOL:400V , (MOVOL:380V , MOVOL:460V) + CAPPRM:ASME + FREQ:60HZ) + CAPPRE:IEC , CAPPRE:ULCUL + CAPPRM:ASME + FREQ:60HZ + MOVOL:460V) + COOL:WATER **(25/07/2019 - 27/11/2019)** ((((MOVOL:380V , MOVOL:460V) + CAPPRM:ASME , CAPPRM:MHLW + MOVOL:460V) + FREQ:60HZ , (CAPPRM:AS1210 , CAPPRM:CE , CAPPRM:MHLW , CAPPRM:MOM) + FREQ:50HZ + MOVOL:400V) + CAPPRE:IEC , CAPPRE:ULCUL + CAPPRM:ASME + FREQ:60HZ + MOVOL:460V) + COOL:WATER **(28/11/2019 - ...)** ((((CAPPRM:AS1210 , CAPPRM:CE , CAPPRM:MHLW , CAPPRM:MOM) + MOVOL:400V , (CAPPRM:CE + MOVOL:500V , CAPPRM:MHLW + MOVOL:200V) + COOL:AIR) + FREQ:50HZ , ((CAPPRM:ASME , CAPPRM:MHLW) + MOVOL:460V , CAPPRM:ASME + COOL:WATER + MOVOL:380V) + FREQ:60HZ) + CAPPRE:IEC , ((MOVOL:230V , MOVOL:575V) + COOL:AIR , MOVOL:460V) + CAPPRE:ULCUL + CAPPRM:ASME + FREQ:60HZ)	1X11:2,5

Legend:

CAPPRE:IEC - Component approval electrical:IEC
CAPPRE:ULCUL - Component approval electrical:UL/cUL
CAPPRM:AS1210 - Component approval mechanical:AS1210
CAPPRM:ASME - Component approval mechanical:ASME
CAPPRM:CE - Component approval mechanical:CE
CAPPRM:MHLW - Component approval mechanical:MHLW
CAPPRM:MOM - Component approval mechanical:MOM
COOL:AIR - Cooling:Air cooled
COOL:WATER - Cooling:Water cooled
FREQ:50HZ - Frequency:50 Hz
FREQ:60HZ - Frequency:60 Hz
IDRY:Y - Integrated dryer:Yes
MODEL:GA75VP_16 - Model:GA 75VSD+
MOVOL:200V - Supply voltage:200 V
MOVOL:230V - Supply voltage:230 V
MOVOL:380V - Supply voltage:380 V
MOVOL:400V - Supply voltage:400 V
MOVOL:460V - Supply voltage:460 V
MOVOL:500V - Supply voltage:500 V
MOVOL:575V - Supply voltage:575 V

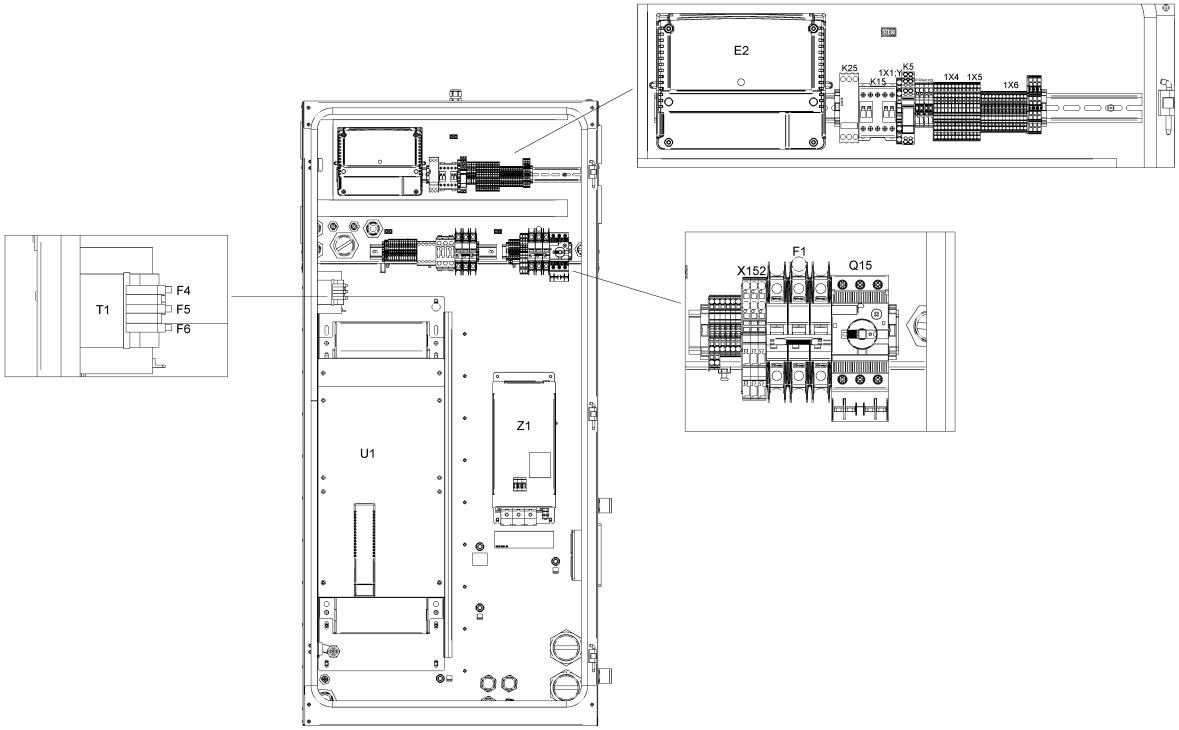
E2
K25
K15
1X1:Y
K5
1X4
1X5
1X6
T1
F4
F5
F6
U1
Z1
X152
F1
Q15

21.10 - Cubicle components GA 75L VSD+ - ((200V-400V-500V/50Hz, 460V/60Hz) - IEC, (230V-460V-575V/60Hz - UL-cUL)) - Full-Feature (28/11/2019 - ...)

(((MOVOL:200V , MOVOL:400V , MOVOL:500V) + FREQ:50HZ , FREQ:60HZ + MOVOL:460V) + CAPPRE:IEC , (MOVOL:230V , MOVOL:460V , MOVOL:575V) + CAPPRE:ULCUL + FREQ:60HZ) + IDRY:Y + MODEL:GA75VP_16

Ref	Part Number	Qty	Name	Validity	EL
	1088 0039 40	1	PLATE	**(25/02/2019 - 24/07/2019)** (((CAPPRM:AS1210 , CAPPRM:CE , CAPPRM:MHLW , CAPPRM:MOM) + FREQ:50HZ + MOVOL:400V , (MOVOL:380V , MOVOL:460V) + CAPPRM:ASME + FREQ:60HZ) + CAPPRE:IEC , CAPPRE:ULCUL + CAPPRM:ASME + FREQ:60HZ + MOVOL:460V) + COOL:WATER **(25/07/2019 - 27/11/2019)** ((((MOVOL:380V , MOVOL:460V) + CAPPRM:ASME , CAPPRM:MHLW + MOVOL:460V) + FREQ:60HZ , (CAPPRM:AS1210 , CAPPRM:CE , CAPPRM:MHLW , CAPPRM:MOM) + FREQ:50HZ + MOVOL:400V) + CAPPRE:IEC , CAPPRE:ULCUL + CAPPRM:ASME + FREQ:60HZ + MOVOL:460V) + COOL:WATER **(28/11/2019 - ...)** ((((CAPPRM:AS1210 , CAPPRM:CE , CAPPRM:MHLW , CAPPRM:MOM) + MOVOL:400V , (CAPPRM:CE + MOVOL:500V , CAPPRM:MHLW + MOVOL:200V) + COOL:AIR) + FREQ:50HZ , ((CAPPRM:ASME , CAPPRM:MHLW) + MOVOL:460V , CAPPRM:ASME + COOL:WATER + MOVOL:380V) + FREQ:60HZ) + CAPPRE:IEC , ((MOVOL:230V , MOVOL:575V) + COOL:AIR , MOVOL:460V) + CAPPRE:ULCUL + CAPPRM:ASME + FREQ:60HZ)	1X11
	1088 0039 34	4	TERMINAL	**(25/02/2019 - 24/07/2019)** (((CAPPRM:AS1210 , CAPPRM:CE , CAPPRM:MHLW , CAPPRM:MOM) + FREQ:50HZ + MOVOL:400V , (MOVOL:380V , MOVOL:460V) + CAPPRM:ASME + FREQ:60HZ) + CAPPRE:IEC , CAPPRE:ULCUL + CAPPRM:ASME + FREQ:60HZ + MOVOL:460V) + COOL:WATER **(25/07/2019 - 27/11/2019)** ((((MOVOL:380V , MOVOL:460V) + CAPPRM:ASME , CAPPRM:MHLW + MOVOL:460V) + FREQ:60HZ , (CAPPRM:AS1210 , CAPPRM:CE , CAPPRM:MHLW , CAPPRM:MOM) + FREQ:50HZ + MOVOL:400V) + CAPPRE:IEC , CAPPRE:ULCUL + CAPPRM:ASME + FREQ:60HZ + MOVOL:460V) + COOL:WATER **(28/11/2019 - ...)** ((((CAPPRM:AS1210 , CAPPRM:CE , CAPPRM:MHLW , CAPPRM:MOM) + MOVOL:400V , (CAPPRM:CE + MOVOL:500V , CAPPRM:MHLW + MOVOL:200V) + COOL:AIR) + FREQ:50HZ , ((CAPPRM:ASME , CAPPRM:MHLW) + MOVOL:460V , CAPPRM:ASME + COOL:WATER + MOVOL:380V) + FREQ:60HZ) + CAPPRE:IEC , ((MOVOL:230V , MOVOL:575V) + COOL:AIR , MOVOL:460V) + CAPPRE:ULCUL + CAPPRM:ASME + FREQ:60HZ)	

Electrical legend: 1X11:30,301,34

Legend:

CAPPRE:IEC - Component approval electrical:IEC
CAPPRE:ULCUL - Component approval electrical:UL/cUL
CAPPRM:AS1210 - Component approval mechanical:AS1210
CAPPRM:ASME - Component approval mechanical:ASME
CAPPRM:CE - Component approval mechanical:CE
CAPPRM:MHLW - Component approval mechanical:MHLW
CAPPRM:MOM - Component approval mechanical:MOM
COOL:AIR - Cooling:Air cooled
COOL:WATER - Cooling:Water cooled
FREQ:50HZ - Frequency:50 Hz
FREQ:60HZ - Frequency:60 Hz
IDRY:Y - Integrated dryer:Yes
MODEL:GA75VP_16 - Model:GA 75VSD+
MOVOL:200V - Supply voltage:200 V
MOVOL:230V - Supply voltage:230 V
MOVOL:380V - Supply voltage:380 V
MOVOL:400V - Supply voltage:400 V
MOVOL:460V - Supply voltage:460 V
MOVOL:500V - Supply voltage:500 V
MOVOL:575V - Supply voltage:575 V

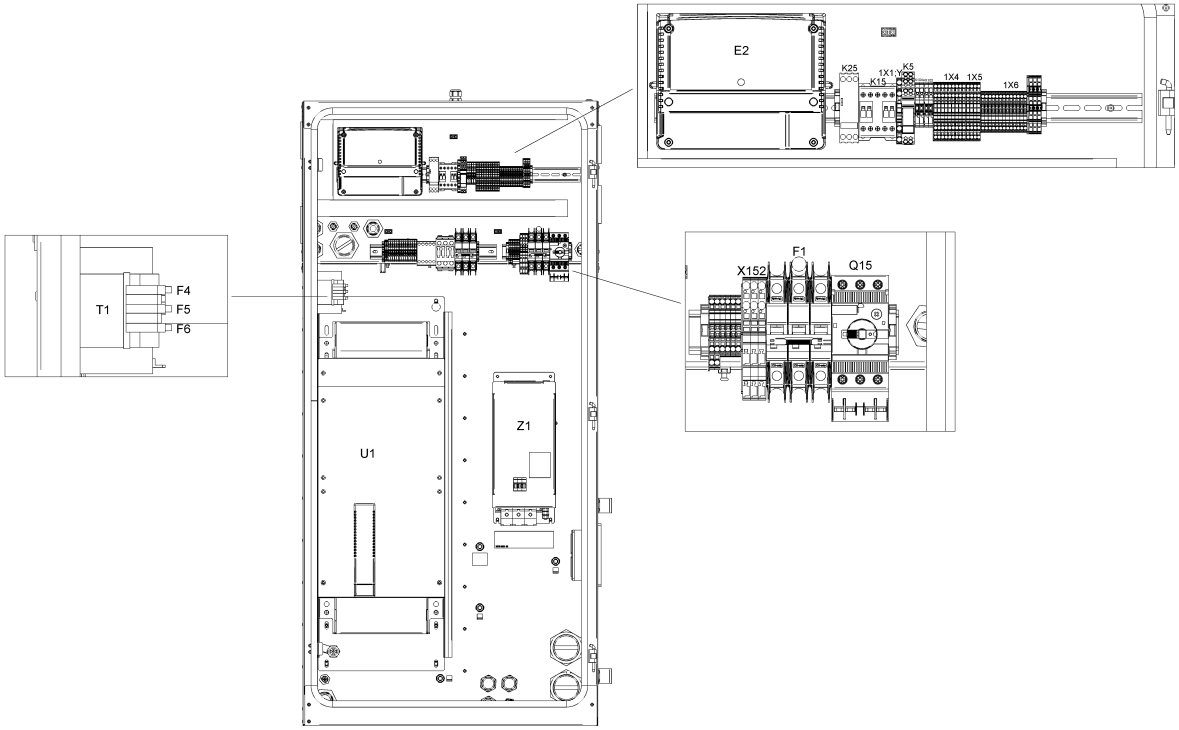
E2
K25
K15
1X1:Y
K5
1X4
1X5
1X6
T1
F4
F5
F6
U1
Z1
X152
F1
Q15

21.10 - Cubicle components GA 75L VSD+ - ((200V-400V-500V/50Hz, 460V/60Hz) - IEC, (230V-460V-575V/60Hz - UL-cUL)) - Full-Feature (28/11/2019 - ...)

(((MOVOL:200V , MOVOL:400V , MOVOL:500V) + FREQ:50HZ , FREQ:60HZ + MOVOL:460V) + CAPPRE:IEC , (MOVOL:230V , MOVOL:460V , MOVOL:575V) + CAPPRE:ULCUL + FREQ:60HZ) + IDRY:Y + MODEL:GA75VP_16

Ref	Part Number	Qty	Name	Validity	EL
	1088 0039 35	1	PLATE	**(25/02/2019 - 24/07/2019)** (((CAPPRM:AS1210 , CAPPRM:CE , CAPPRM:MHLW , CAPPRM:MOM) + FREQ:50HZ + MOVOL:400V , (MOVOL:380V , MOVOL:460V) + CAPPRM:ASME + FREQ:60HZ) + CAPPRE:IEC , CAPPRE:ULCUL + CAPPRM:ASME + FREQ:60HZ + MOVOL:460V) + COOL:WATER **(25/07/2019 - 27/11/2019)** ((((MOVOL:380V , MOVOL:460V) + CAPPRM:ASME , CAPPRM:MHLW + MOVOL:460V) + FREQ:60HZ , (CAPPRM:AS1210 , CAPPRM:CE , CAPPRM:MHLW , CAPPRM:MOM) + FREQ:50HZ + MOVOL:400V) + CAPPRE:IEC , CAPPRE:ULCUL + CAPPRM:ASME + FREQ:60HZ + MOVOL:460V) + COOL:WATER **(28/11/2019 - ...)** ((((CAPPRM:AS1210 , CAPPRM:CE , CAPPRM:MHLW , CAPPRM:MOM) + MOVOL:400V , (CAPPRM:CE + MOVOL:500V , CAPPRM:MHLW + MOVOL:200V) + COOL:AIR) + FREQ:50HZ , ((CAPPRM:ASME , CAPPRM:MHLW) + MOVOL:460V , CAPPRM:ASME + COOL:WATER + MOVOL:380V) + FREQ:60HZ) + CAPPRE:IEC , ((MOVOL:230V , MOVOL:575V) + COOL:AIR , MOVOL:460V) + CAPPRE:ULCUL + CAPPRM:ASME + FREQ:60HZ)	1X11
	1088 0039 04	2	TERMINAL	**(25/02/2019 - 24/07/2019)** (((CAPPRM:AS1210 , CAPPRM:CE , CAPPRM:MHLW , CAPPRM:MOM) + FREQ:50HZ + MOVOL:400V , (MOVOL:380V , MOVOL:460V) + CAPPRM:ASME + FREQ:60HZ) + CAPPRE:IEC , CAPPRE:ULCUL + CAPPRM:ASME + FREQ:60HZ + MOVOL:460V) + COOL:WATER **(25/07/2019 - 27/11/2019)** ((((MOVOL:380V , MOVOL:460V) + CAPPRM:ASME , CAPPRM:MHLW + MOVOL:460V) + FREQ:60HZ , (CAPPRM:AS1210 , CAPPRM:CE , CAPPRM:MHLW , CAPPRM:MOM) + FREQ:50HZ + MOVOL:400V) + CAPPRE:IEC , CAPPRE:ULCUL + CAPPRM:ASME + FREQ:60HZ + MOVOL:460V) + COOL:WATER **(28/11/2019 - ...)** ((((CAPPRM:AS1210 , CAPPRM:CE , CAPPRM:MHLW , CAPPRM:MOM) + MOVOL:400V , (CAPPRM:CE + MOVOL:500V , CAPPRM:MHLW + MOVOL:200V) + COOL:AIR) + FREQ:50HZ , ((CAPPRM:ASME , CAPPRM:MHLW) + MOVOL:460V , CAPPRM:ASME + COOL:WATER + MOVOL:380V) + FREQ:60HZ) + CAPPRE:IEC , ((MOVOL:230V , MOVOL:575V) + COOL:AIR , MOVOL:460V) + CAPPRE:ULCUL + CAPPRM:ASME + FREQ:60HZ)	X104a

Legend:

CAPPRE:IEC - Component approval electrical:IEC
CAPPRE:ULCUL - Component approval electrical:UL/cUL
CAPPRM:AS1210 - Component approval mechanical:AS1210
CAPPRM:ASME - Component approval mechanical:ASME
CAPPRM:CE - Component approval mechanical:CE
CAPPRM:MHLW - Component approval mechanical:MHLW
CAPPRM:MOM - Component approval mechanical:MOM
COOL:AIR - Cooling:Air cooled
COOL:WATER - Cooling:Water cooled
FREQ:50HZ - Frequency:50 Hz
FREQ:60HZ - Frequency:60 Hz
IDRY:Y - Integrated dryer:Yes
MODEL:GA75VP_16 - Model:GA 75VSD+
MOVOL:200V - Supply voltage:200 V
MOVOL:230V - Supply voltage:230 V
MOVOL:380V - Supply voltage:380 V
MOVOL:400V - Supply voltage:400 V
MOVOL:460V - Supply voltage:460 V
MOVOL:500V - Supply voltage:500 V
MOVOL:575V - Supply voltage:575 V

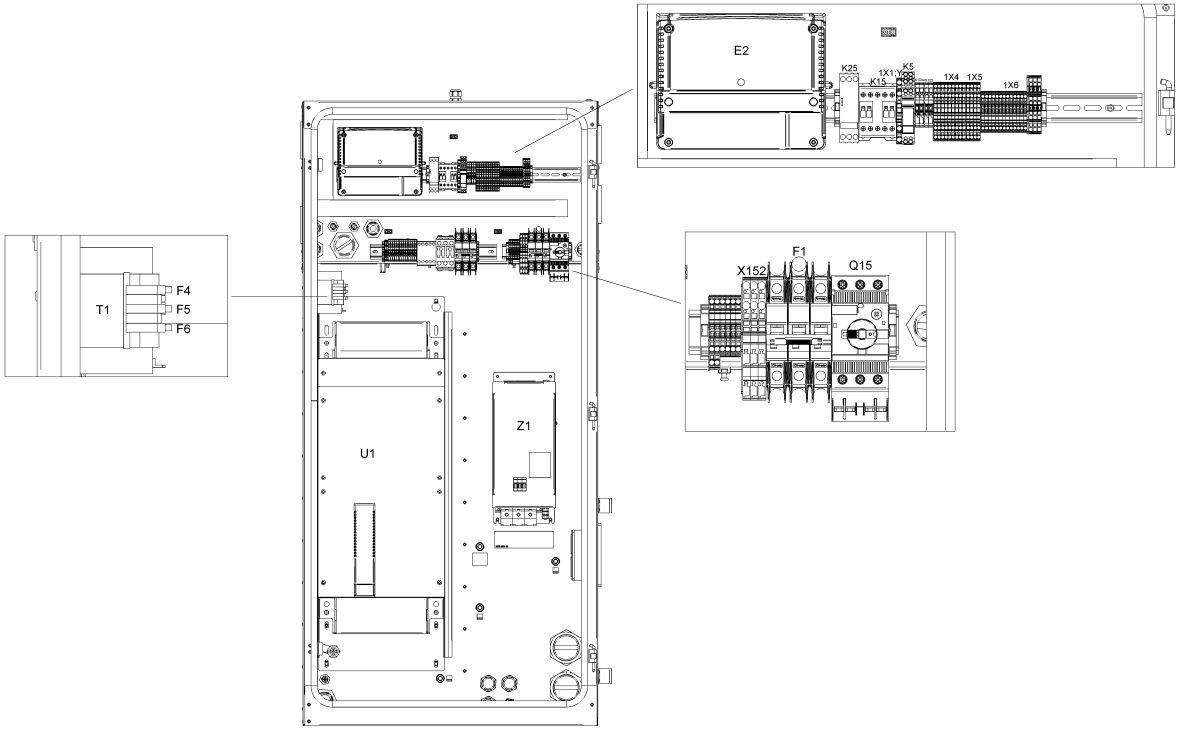
E2
K25
K15
1X1:Y
K5
1X4
1X5
1X6
T1
F4
F5
F6
U1
Z1
X152
F1
Q15

21.10 - Cubicle components GA 75L VSD+ - ((200V-400V-500V/50Hz, 460V/60Hz) - IEC, (230V-460V-575V/60Hz - UL-cUL)) - Full-Feature (28/11/2019 - ...)

(((MOVOL:200V , MOVOL:400V , MOVOL:500V) + FREQ:50HZ , FREQ:60HZ + MOVOL:460V) + CAPPRE:IEC , (MOVOL:230V , MOVOL:460V , MOVOL:575V) + CAPPRE:ULCUL + FREQ:60HZ) + IDRY:Y + MODEL:GA75VP_16

Ref	Part Number	Qty	Name	Validity	EL
	1088 0037 99	2	PIN	**(25/02/2019 - 24/07/2019)** (((CAPPRM:AS1210 , CAPPRM:CE , CAPPRM:MHLW , CAPPRM:MOM) + FREQ:50HZ + MOVOL:400V , (MOVOL:380V , MOVOL:460V) + CAPPRM:ASME + FREQ:60HZ) + CAPPRE:IEC , CAPPRE:ULCUL + CAPPRM:ASME + FREQ:60HZ + MOVOL:460V) + COOL:WATER **(25/07/2019 - 27/11/2019)** ((((MOVOL:380V , MOVOL:460V) + CAPPRM:ASME , CAPPRM:MHLW + MOVOL:460V) + FREQ:60HZ , (CAPPRM:AS1210 , CAPPRM:CE , CAPPRM:MHLW , CAPPRM:MOM) + FREQ:50HZ + MOVOL:400V) + CAPPRE:IEC , CAPPRE:ULCUL + CAPPRM:ASME + FREQ:60HZ + MOVOL:460V) + COOL:WATER **(28/11/2019 - ...)** ((((CAPPRM:AS1210 , CAPPRM:CE , CAPPRM:MHLW , CAPPRM:MOM) + MOVOL:400V , (CAPPRM:CE + MOVOL:500V , CAPPRM:MHLW + MOVOL:200V) + COOL:AIR) + FREQ:50HZ , ((CAPPRM:ASME , CAPPRM:MHLW) + MOVOL:460V , CAPPRM:ASME + COOL:WATER + MOVOL:380V) + FREQ:60HZ) + CAPPRE:IEC , ((MOVOL:230V , MOVOL:575V) + COOL:AIR , MOVOL:460V) + CAPPRE:ULCUL + CAPPRM:ASME + FREQ:60HZ)	X104a/X105
	1088 0039 02	1	PLATE	**(25/02/2019 - 24/07/2019)** (((CAPPRM:AS1210 , CAPPRM:CE , CAPPRM:MHLW , CAPPRM:MOM) + FREQ:50HZ + MOVOL:400V , (MOVOL:380V , MOVOL:460V) + CAPPRM:ASME + FREQ:60HZ) + CAPPRE:IEC , CAPPRE:ULCUL + CAPPRM:ASME + FREQ:60HZ + MOVOL:460V) + COOL:WATER **(25/07/2019 - 27/11/2019)** ((((MOVOL:380V , MOVOL:460V) + CAPPRM:ASME , CAPPRM:MHLW + MOVOL:460V) + FREQ:60HZ , (CAPPRM:AS1210 , CAPPRM:CE , CAPPRM:MHLW , CAPPRM:MOM) + FREQ:50HZ + MOVOL:400V) + CAPPRE:IEC , CAPPRE:ULCUL + CAPPRM:ASME + FREQ:60HZ + MOVOL:460V) + COOL:WATER **(28/11/2019 - ...)** ((((CAPPRM:AS1210 , CAPPRM:CE , CAPPRM:MHLW , CAPPRM:MOM) + MOVOL:400V , (CAPPRM:CE + MOVOL:500V , CAPPRM:MHLW + MOVOL:200V) + COOL:AIR) + FREQ:50HZ , ((CAPPRM:ASME , CAPPRM:MHLW) + MOVOL:460V , CAPPRM:ASME + COOL:WATER + MOVOL:380V) + FREQ:60HZ) + CAPPRE:IEC , ((MOVOL:230V , MOVOL:575V) + COOL:AIR , MOVOL:460V) + CAPPRE:ULCUL + CAPPRM:ASME + FREQ:60HZ)	X104a

Legend:

CAPPRE:IEC - Component approval electrical:IEC
CAPPRE:ULCUL - Component approval electrical:UL/cUL
CAPPRM:AS1210 - Component approval mechanical:AS1210
CAPPRM:ASME - Component approval mechanical:ASME
CAPPRM:CE - Component approval mechanical:CE
CAPPRM:MHLW - Component approval mechanical:MHLW
CAPPRM:MOM - Component approval mechanical:MOM
COOL:AIR - Cooling:Air cooled
COOL:WATER - Cooling:Water cooled
FREQ:50HZ - Frequency:50 Hz
FREQ:60HZ - Frequency:60 Hz
IDRY:Y - Integrated dryer:Yes
MODEL:GA75VP_16 - Model:GA 75VSD+
MOVOL:200V - Supply voltage:200 V
MOVOL:230V - Supply voltage:230 V
MOVOL:380V - Supply voltage:380 V
MOVOL:400V - Supply voltage:400 V
MOVOL:460V - Supply voltage:460 V
MOVOL:500V - Supply voltage:500 V
MOVOL:575V - Supply voltage:575 V

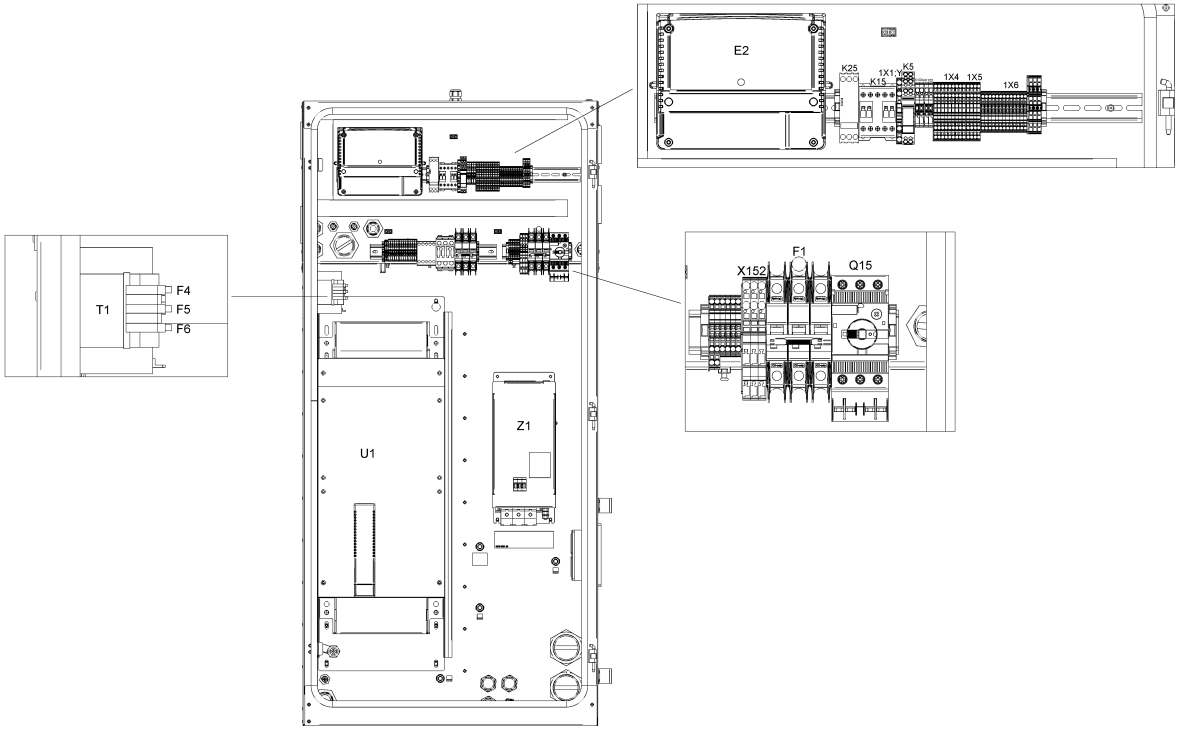
E2
K25
K15
1X1:Y
K5
1X4
1X5
1X6
T1
F4
F5
F6
U1
Z1
X152
F1
Q15

Ref	Part Number	Qty	Name	Validity	EL
	1088 0039 07	2	TERMINAL	**(25/02/2019 - 24/07/2019)** (((CAPPRM:AS1210 , CAPPRM:CE , CAPPRM:MHLW , CAPPRM:MOM) + FREQ:50HZ + MOVOL:400V , (MOVOL:380V , MOVOL:460V) + CAPPRM:ASME + FREQ:60HZ) + CAPPRE:IEC , CAPPRE:ULCUL + CAPPRM:ASME + FREQ:60HZ + MOVOL:460V) + COOL:WATER **(25/07/2019 - 27/11/2019)** ((((MOVOL:380V , MOVOL:460V) + CAPPRM:ASME , CAPPRM:MHLW + MOVOL:460V) + FREQ:60HZ , (CAPPRM:AS1210 , CAPPRM:CE , CAPPRM:MHLW , CAPPRM:MOM) + FREQ:50HZ + MOVOL:400V) + CAPPRE:IEC , CAPPRE:ULCUL + CAPPRM:ASME + FREQ:60HZ + MOVOL:460V) + COOL:WATER **(28/11/2019 - ...)** ((((CAPPRM:AS1210 , CAPPRM:CE , CAPPRM:MHLW , CAPPRM:MOM) + MOVOL:400V , (CAPPRM:CE + MOVOL:500V , CAPPRM:MHLW + MOVOL:200V) + COOL:AIR) + FREQ:50HZ , ((CAPPRM:ASME , CAPPRM:MHLW) + MOVOL:460V , CAPPRM:ASME + COOL:WATER + MOVOL:380V) + FREQ:60HZ) + CAPPRE:IEC , ((MOVOL:230V , MOVOL:575V) + COOL:AIR , MOVOL:460V) + CAPPRE:ULCUL + CAPPRM:ASME + FREQ:60HZ)	X105
	1088 0039 05	1	PLATE	**(25/02/2019 - 24/07/2019)** (((CAPPRM:AS1210 , CAPPRM:CE , CAPPRM:MHLW , CAPPRM:MOM) + FREQ:50HZ + MOVOL:400V , (MOVOL:380V , MOVOL:460V) + CAPPRM:ASME + FREQ:60HZ) + CAPPRE:IEC , CAPPRE:ULCUL + CAPPRM:ASME + FREQ:60HZ + MOVOL:460V) + COOL:WATER **(25/07/2019 - 27/11/2019)** ((((MOVOL:380V , MOVOL:460V) + CAPPRM:ASME , CAPPRM:MHLW + MOVOL:460V) + FREQ:60HZ , (CAPPRM:AS1210 , CAPPRM:CE , CAPPRM:MHLW , CAPPRM:MOM) + FREQ:50HZ + MOVOL:400V) + CAPPRE:IEC , CAPPRE:ULCUL + CAPPRM:ASME + FREQ:60HZ + MOVOL:460V) + COOL:WATER **(28/11/2019 - ...)** ((((CAPPRM:AS1210 , CAPPRM:CE , CAPPRM:MHLW , CAPPRM:MOM) + MOVOL:400V , (CAPPRM:CE + MOVOL:500V , CAPPRM:MHLW + MOVOL:200V) + COOL:AIR) + FREQ:50HZ , ((CAPPRM:ASME , CAPPRM:MHLW) + MOVOL:460V , CAPPRM:ASME + COOL:WATER + MOVOL:380V) + FREQ:60HZ) + CAPPRE:IEC , ((MOVOL:230V , MOVOL:575V) + COOL:AIR , MOVOL:460V) + CAPPRE:ULCUL + CAPPRM:ASME + FREQ:60HZ)	X105

Legend:

CAPPRE:IEC - Component approval electrical:IEC
CAPPRE:ULCUL - Component approval electrical:UL/cUL
CAPPRM:AS1210 - Component approval mechanical:AS1210
CAPPRM:ASME - Component approval mechanical:ASME
CAPPRM:CE - Component approval mechanical:CE
CAPPRM:MHLW - Component approval mechanical:MHLW
CAPPRM:MOM - Component approval mechanical:MOM
COOL:AIR - Cooling:Air cooled
COOL:WATER - Cooling:Water cooled
FREQ:50HZ - Frequency:50 Hz
FREQ:60HZ - Frequency:60 Hz
IDRY:Y - Integrated dryer:Yes
MODEL:GA75VP_16 - Model:GA 75VSD+
MOVOL:200V - Supply voltage:200 V
MOVOL:230V - Supply voltage:230 V
MOVOL:380V - Supply voltage:380 V
MOVOL:400V - Supply voltage:400 V
MOVOL:460V - Supply voltage:460 V
MOVOL:500V - Supply voltage:500 V
MOVOL:575V - Supply voltage:575 V

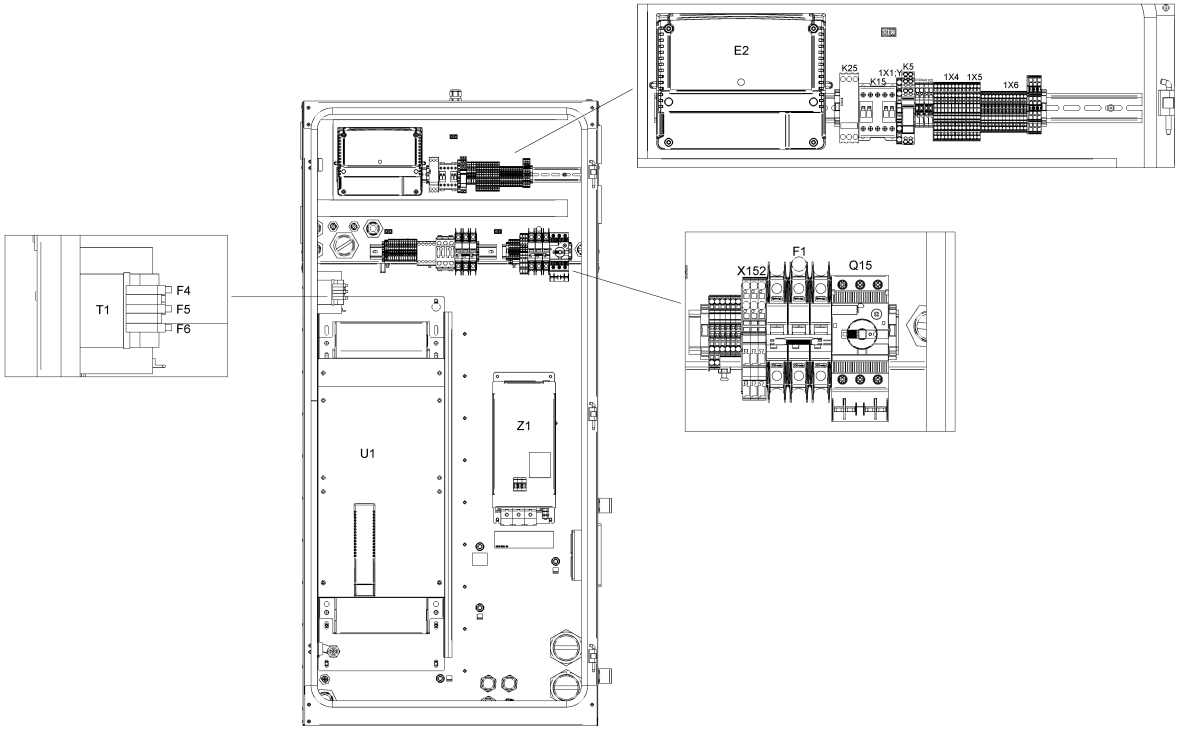
E2
K25
K15
1X1:Y
K5
1X4
1X5
1X6
T1
F4
F5
F6
U1
Z1
X152
F1
Q15

Ref	Part Number	Qty	Name	Validity	EL
	1088 0039 34	13	TERMINAL	**(25/02/2019 - 24/07/2019)** (((CAPPRM:AS1210 , CAPPRM:CE , CAPPRM:MHLW , CAPPRM:MOM) + FREQ:50HZ + MOVOL:400V , (MOVOL:380V , MOVOL:460V) + CAPPRM:ASME + FREQ:60HZ) + CAPPRE:IEC , CAPPRE:ULCUL + CAPPRM:ASME + FREQ:60HZ + MOVOL:460V) + COOL:WATER **(25/07/2019 - 27/11/2019)** ((((MOVOL:380V , MOVOL:460V) + CAPPRM:ASME , CAPPRM:MHLW + MOVOL:460V) + FREQ:60HZ , (CAPPRM:AS1210 , CAPPRM:CE , CAPPRM:MHLW , CAPPRM:MOM) + FREQ:50HZ + MOVOL:400V) + CAPPRE:IEC , CAPPRE:ULCUL + CAPPRM:ASME + FREQ:60HZ + MOVOL:460V) + COOL:WATER **(28/11/2019 - ...)** ((((CAPPRM:AS1210 , CAPPRM:CE , CAPPRM:MHLW , CAPPRM:MOM) + MOVOL:400V , (CAPPRM:CE + MOVOL:500V , CAPPRM:MHLW + MOVOL:200V) + COOL:AIR) + FREQ:50HZ , ((CAPPRM:ASME , CAPPRM:MHLW) + MOVOL:460V , CAPPRM:ASME + COOL:WATER + MOVOL:380V) + FREQ:60HZ) + CAPPRE:IEC , ((MOVOL:230V , MOVOL:575V) + COOL:AIR , MOVOL:460V) + CAPPRE:ULCUL + CAPPRM:ASME + FREQ:60HZ)	1X6
	1088 0037 69	3	CONNECTOR	**(25/02/2019 - 24/07/2019)** (((CAPPRM:AS1210 , CAPPRM:CE , CAPPRM:MHLW , CAPPRM:MOM) + FREQ:50HZ + MOVOL:400V , (MOVOL:380V , MOVOL:460V) + CAPPRM:ASME + FREQ:60HZ) + CAPPRE:IEC , CAPPRE:ULCUL + CAPPRM:ASME + FREQ:60HZ + MOVOL:460V) + COOL:WATER **(25/07/2019 - 27/11/2019)** ((((MOVOL:380V , MOVOL:460V) + CAPPRM:ASME , CAPPRM:MHLW + MOVOL:460V) + FREQ:60HZ , (CAPPRM:AS1210 , CAPPRM:CE , CAPPRM:MHLW , CAPPRM:MOM) + FREQ:50HZ + MOVOL:400V) + CAPPRE:IEC , CAPPRE:ULCUL + CAPPRM:ASME + FREQ:60HZ + MOVOL:460V) + COOL:WATER **(28/11/2019 - ...)** ((((CAPPRM:AS1210 , CAPPRM:CE , CAPPRM:MHLW , CAPPRM:MOM) + MOVOL:400V , (CAPPRM:CE + MOVOL:500V , CAPPRM:MHLW + MOVOL:200V) + COOL:AIR) + FREQ:50HZ , ((CAPPRM:ASME , CAPPRM:MHLW) + MOVOL:460V , CAPPRM:ASME + COOL:WATER + MOVOL:380V) + FREQ:60HZ) + CAPPRE:IEC , ((MOVOL:230V , MOVOL:575V) + COOL:AIR , MOVOL:460V) + CAPPRE:ULCUL + CAPPRM:ASME + FREQ:60HZ)	1X7

Legend:

CAPPRE:IEC - Component approval electrical:IEC
CAPPRE:ULCUL - Component approval electrical:UL/cUL
CAPPRM:AS1210 - Component approval mechanical:AS1210
CAPPRM:ASME - Component approval mechanical:ASME
CAPPRM:CE - Component approval mechanical:CE
CAPPRM:MHLW - Component approval mechanical:MHLW
CAPPRM:MOM - Component approval mechanical:MOM
COOL:AIR - Cooling:Air cooled
COOL:WATER - Cooling:Water cooled
FREQ:50HZ - Frequency:50 Hz
FREQ:60HZ - Frequency:60 Hz
IDRY:Y - Integrated dryer:Yes
MODEL:GA75VP_16 - Model:GA 75VSD+
MOVOL:200V - Supply voltage:200 V
MOVOL:230V - Supply voltage:230 V
MOVOL:380V - Supply voltage:380 V
MOVOL:400V - Supply voltage:400 V
MOVOL:460V - Supply voltage:460 V
MOVOL:500V - Supply voltage:500 V
MOVOL:575V - Supply voltage:575 V

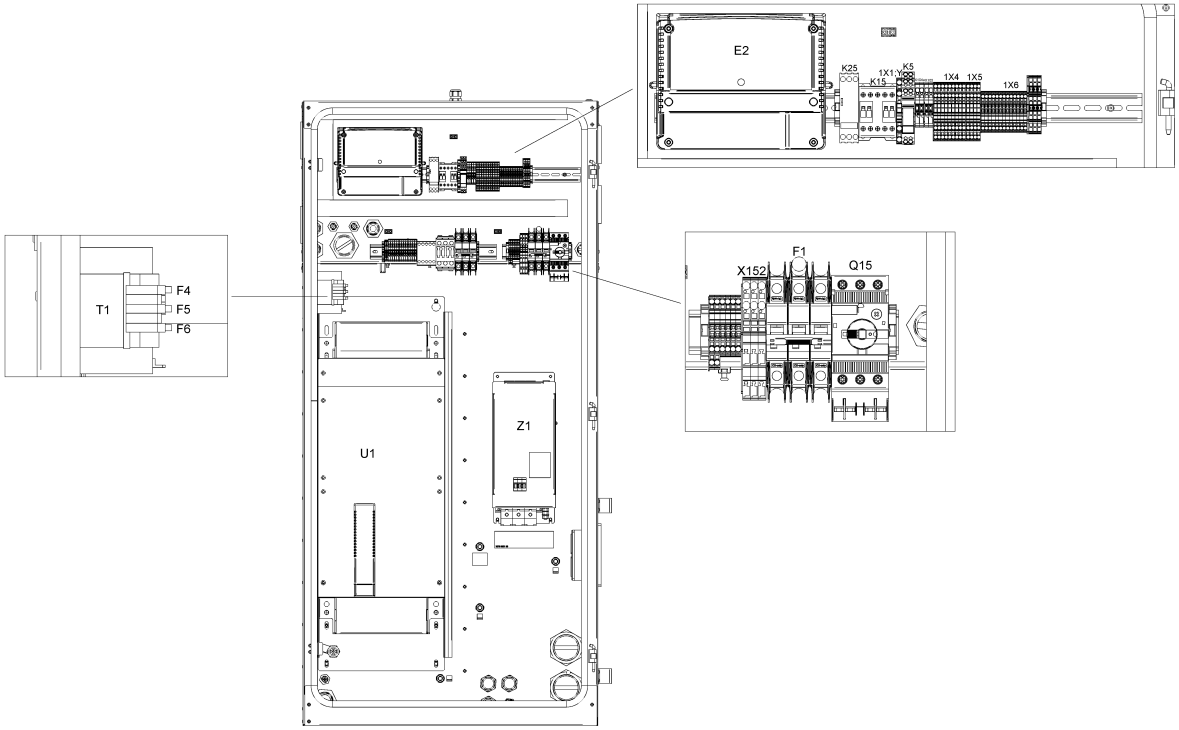
E2
K25
K15
1X1:Y
K5
1X4
1X5
1X6
T1
F4
F5
F6
U1
Z1
X152
F1
Q15

21.10 - Cubicle components GA 75L VSD+ - ((200V-400V-500V/50Hz, 460V/60Hz) - IEC, (230V-460V-575V/60Hz - UL-cUL)) - Full-Feature (28/11/2019 - ...)

(((MOVOL:200V , MOVOL:400V , MOVOL:500V) + FREQ:50HZ , FREQ:60HZ + MOVOL:460V) + CAPPRE:IEC , (MOVOL:230V , MOVOL:460V , MOVOL:575V) + CAPPRE:ULCUL + FREQ:60HZ) + IDRY:Y + MODEL:GA75VP_16

Ref	Part Number	Qty	Name	Validity	EL
	1088 0039 35	1	PLATE	**(25/02/2019 - 24/07/2019)** (((CAPPRM:AS1210 , CAPPRM:CE , CAPPRM:MHLW , CAPPRM:MOM) + FREQ:50HZ + MOVOL:400V , (MOVOL:380V , MOVOL:460V) + CAPPRM:ASME + FREQ:60HZ) + CAPPRE:IEC , CAPPRE:ULCUL + CAPPRM:ASME + FREQ:60HZ + MOVOL:460V) + COOL:WATER **(25/07/2019 - 27/11/2019)** ((((MOVOL:380V , MOVOL:460V) + CAPPRM:ASME , CAPPRM:MHLW + MOVOL:460V) + FREQ:60HZ , (CAPPRM:AS1210 , CAPPRM:CE , CAPPRM:MHLW , CAPPRM:MOM) + FREQ:50HZ + MOVOL:400V) + CAPPRE:IEC , CAPPRE:ULCUL + CAPPRM:ASME + FREQ:60HZ + MOVOL:460V) + COOL:WATER **(28/11/2019 - ...)** ((((CAPPRM:AS1210 , CAPPRM:CE , CAPPRM:MHLW , CAPPRM:MOM) + MOVOL:400V , (CAPPRM:CE + MOVOL:500V , CAPPRM:MHLW + MOVOL:200V) + COOL:AIR) + FREQ:50HZ , ((CAPPRM:ASME , CAPPRM:MHLW) + MOVOL:460V , CAPPRM:ASME + COOL:WATER + MOVOL:380V) + FREQ:60HZ) + CAPPRE:IEC , ((MOVOL:230V , MOVOL:575V) + COOL:AIR , MOVOL:460V) + CAPPRE:ULCUL + CAPPRM:ASME + FREQ:60HZ)	1X6
	1088 0040 37	1	END PLATE	**(25/02/2019 - 24/07/2019)** (((CAPPRM:AS1210 , CAPPRM:CE , CAPPRM:MHLW , CAPPRM:MOM) + FREQ:50HZ + MOVOL:400V , (MOVOL:380V , MOVOL:460V) + CAPPRM:ASME + FREQ:60HZ) + CAPPRE:IEC , CAPPRE:ULCUL + CAPPRM:ASME + FREQ:60HZ + MOVOL:460V) + COOL:WATER **(25/07/2019 - 27/11/2019)** ((((MOVOL:380V , MOVOL:460V) + CAPPRM:ASME , CAPPRM:MHLW + MOVOL:460V) + FREQ:60HZ , (CAPPRM:AS1210 , CAPPRM:CE , CAPPRM:MHLW , CAPPRM:MOM) + FREQ:50HZ + MOVOL:400V) + CAPPRE:IEC , CAPPRE:ULCUL + CAPPRM:ASME + FREQ:60HZ + MOVOL:460V) + COOL:WATER **(28/11/2019 - ...)** ((((CAPPRM:AS1210 , CAPPRM:CE , CAPPRM:MHLW , CAPPRM:MOM) + MOVOL:400V , (CAPPRM:CE + MOVOL:500V , CAPPRM:MHLW + MOVOL:200V) + COOL:AIR) + FREQ:50HZ , ((CAPPRM:ASME , CAPPRM:MHLW) + MOVOL:460V , CAPPRM:ASME + COOL:WATER + MOVOL:380V) + FREQ:60HZ) + CAPPRE:IEC , ((MOVOL:230V , MOVOL:575V) + COOL:AIR , MOVOL:460V) + CAPPRE:ULCUL + CAPPRM:ASME + FREQ:60HZ)	1X7

Legend:

CAPPRE:IEC - Component approval electrical:IEC
CAPPRE:ULCUL - Component approval electrical:UL/cUL
CAPPRM:AS1210 - Component approval mechanical:AS1210
CAPPRM:ASME - Component approval mechanical:ASME
CAPPRM:CE - Component approval mechanical:CE
CAPPRM:MHLW - Component approval mechanical:MHLW
CAPPRM:MOM - Component approval mechanical:MOM
COOL:AIR - Cooling:Air cooled
COOL:WATER - Cooling:Water cooled
FREQ:50HZ - Frequency:50 Hz
FREQ:60HZ - Frequency:60 Hz
IDRY:Y - Integrated dryer:Yes
MODEL:GA75VP_16 - Model:GA 75VSD+
MOVOL:200V - Supply voltage:200 V
MOVOL:230V - Supply voltage:230 V
MOVOL:380V - Supply voltage:380 V
MOVOL:400V - Supply voltage:400 V
MOVOL:460V - Supply voltage:460 V
MOVOL:500V - Supply voltage:500 V
MOVOL:575V - Supply voltage:575 V

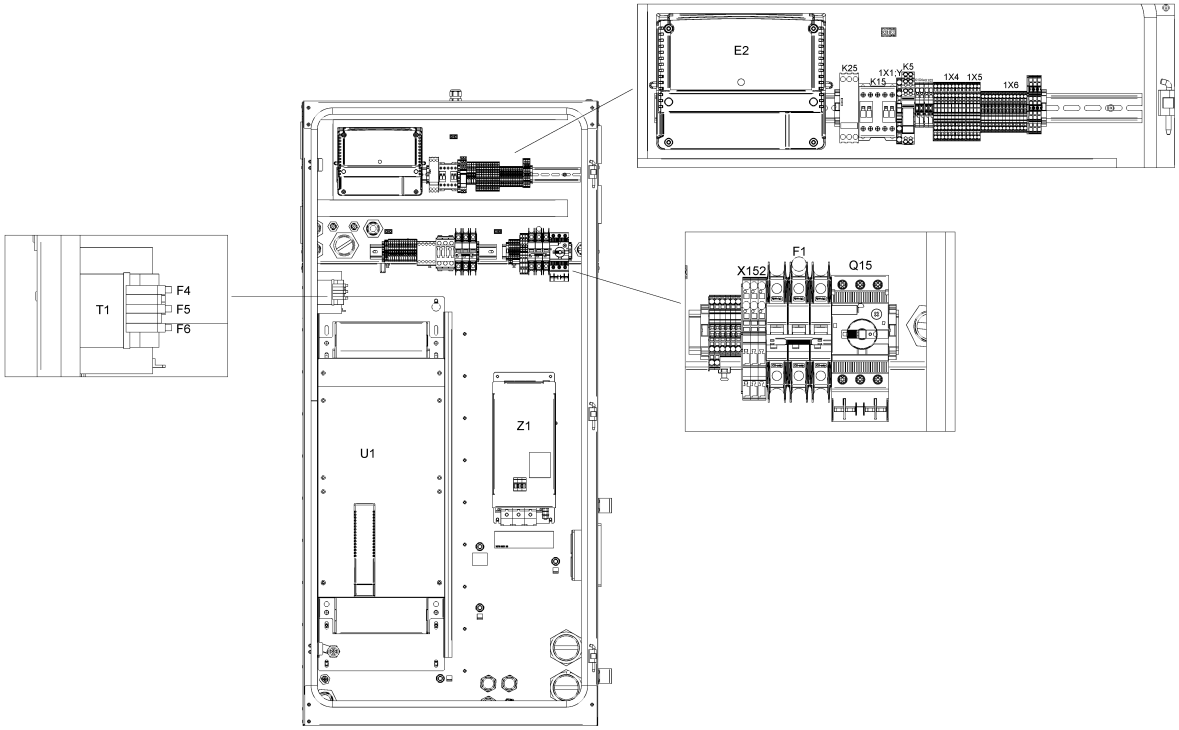
E2
K25
K15
1X1:Y
K5
1X4
1X5
1X6
T1
F4
F5
F6
U1
Z1
X152
F1
Q15

21.10 - Cubicle components GA 75L VSD+ - ((200V-400V-500V/50Hz, 460V/60Hz) - IEC, (230V-460V-575V/60Hz - UL-cUL)) - Full-Feature (28/11/2019 - ...)

(((MOVOL:200V , MOVOL:400V , MOVOL:500V) + FREQ:50HZ , FREQ:60HZ + MOVOL:460V) + CAPPRE:IEC , (MOVOL:230V , MOVOL:460V , MOVOL:575V) + CAPPRE:ULCUL + FREQ:60HZ) + IDRY:Y + MODEL:GA75VP_16

Ref	Part Number	Qty	Name	Validity	EL
	1088 0039 36	9	TERMINAL	**(25/02/2019 - 24/07/2019)** (((CAPPRM:AS1210 , CAPPRM:CE , CAPPRM:MHLW , CAPPRM:MOM) + FREQ:50HZ + MOVOL:400V , (MOVOL:380V , MOVOL:460V) + CAPPRM:ASME + FREQ:60HZ) + CAPPRE:IEC , CAPPRE:ULCUL + CAPPRM:ASME + FREQ:60HZ + MOVOL:460V) + COOL:WATER **(25/07/2019 - 27/11/2019)** ((((MOVOL:380V , MOVOL:460V) + CAPPRM:ASME , CAPPRM:MHLW + MOVOL:460V) + FREQ:60HZ , (CAPPRM:AS1210 , CAPPRM:CE , CAPPRM:MHLW , CAPPRM:MOM) + FREQ:50HZ + MOVOL:400V) + CAPPRE:IEC , CAPPRE:ULCUL + CAPPRM:ASME + FREQ:60HZ + MOVOL:460V) + COOL:WATER **(28/11/2019 - ...)** ((((CAPPRM:AS1210 , CAPPRM:CE , CAPPRM:MHLW , CAPPRM:MOM) + MOVOL:400V , (CAPPRM:CE + MOVOL:500V , CAPPRM:MHLW + MOVOL:200V) + COOL:AIR) + FREQ:50HZ , ((CAPPRM:ASME , CAPPRM:MHLW) + MOVOL:460V , CAPPRM:ASME + COOL:WATER + MOVOL:380V) + FREQ:60HZ) + CAPPRE:IEC , ((MOVOL:230V , MOVOL:575V) + COOL:AIR , MOVOL:460V) + CAPPRE:ULCUL + CAPPRM:ASME + FREQ:60HZ)	1X4
	1088 0039 36	4	TERMINAL	**(25/02/2019 - 24/07/2019)** (((CAPPRM:AS1210 , CAPPRM:CE , CAPPRM:MHLW , CAPPRM:MOM) + FREQ:50HZ + MOVOL:400V , (MOVOL:380V , MOVOL:460V) + CAPPRM:ASME + FREQ:60HZ) + CAPPRE:IEC , CAPPRE:ULCUL + CAPPRM:ASME + FREQ:60HZ + MOVOL:460V) + COOL:WATER **(25/07/2019 - 27/11/2019)** ((((MOVOL:380V , MOVOL:460V) + CAPPRM:ASME , CAPPRM:MHLW + MOVOL:460V) + FREQ:60HZ , (CAPPRM:AS1210 , CAPPRM:CE , CAPPRM:MHLW , CAPPRM:MOM) + FREQ:50HZ + MOVOL:400V) + CAPPRE:IEC , CAPPRE:ULCUL + CAPPRM:ASME + FREQ:60HZ + MOVOL:460V) + COOL:WATER **(28/11/2019 - ...)** ((((CAPPRM:AS1210 , CAPPRM:CE , CAPPRM:MHLW , CAPPRM:MOM) + MOVOL:400V , (CAPPRM:CE + MOVOL:500V , CAPPRM:MHLW + MOVOL:200V) + COOL:AIR) + FREQ:50HZ , ((CAPPRM:ASME , CAPPRM:MHLW) + MOVOL:460V , CAPPRM:ASME + COOL:WATER + MOVOL:380V) + FREQ:60HZ) + CAPPRE:IEC , ((MOVOL:230V , MOVOL:575V) + COOL:AIR , MOVOL:460V) + CAPPRE:ULCUL + CAPPRM:ASME + FREQ:60HZ)	1X6

Legend:

CAPPRE:IEC - Component approval electrical:IEC
CAPPRE:ULCUL - Component approval electrical:UL/cUL
CAPPRM:AS1210 - Component approval mechanical:AS1210
CAPPRM:ASME - Component approval mechanical:ASME
CAPPRM:CE - Component approval mechanical:CE
CAPPRM:MHLW - Component approval mechanical:MHLW
CAPPRM:MOM - Component approval mechanical:MOM
COOL:AIR - Cooling:Air cooled
COOL:WATER - Cooling:Water cooled
FREQ:50HZ - Frequency:50 Hz
FREQ:60HZ - Frequency:60 Hz
IDRY:Y - Integrated dryer:Yes
MODEL:GA75VP_16 - Model:GA 75VSD+
MOVOL:200V - Supply voltage:200 V
MOVOL:230V - Supply voltage:230 V
MOVOL:380V - Supply voltage:380 V
MOVOL:400V - Supply voltage:400 V
MOVOL:460V - Supply voltage:460 V
MOVOL:500V - Supply voltage:500 V
MOVOL:575V - Supply voltage:575 V

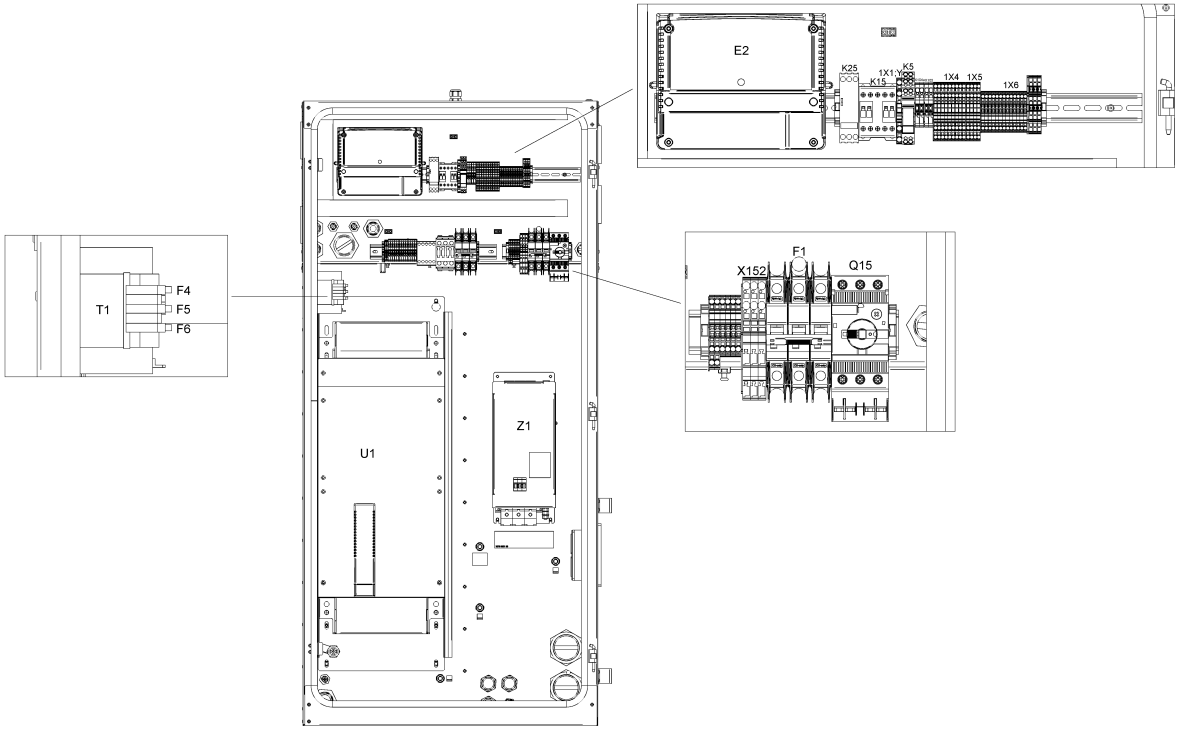
E2
K25
K15
1X1:Y
K5
1X4
1X5
1X6
T1
F4
F5
F6
U1
Z1
X152
F1
Q15

21.10 - Cubicle components GA 75L VSD+ - ((200V-400V-500V/50Hz, 460V/60Hz) - IEC, (230V-460V-575V/60Hz - UL-cUL)) - Full-Feature (28/11/2019 - ...)

(((MOVOL:200V , MOVOL:400V , MOVOL:500V) + FREQ:50HZ , FREQ:60HZ + MOVOL:460V) + CAPPRE:IEC , (MOVOL:230V , MOVOL:460V , MOVOL:575V) + CAPPRE:ULCUL + FREQ:60HZ) + IDRY:Y + MODEL:GA75VP_16

Ref	Part Number	Qty	Name	Validity	EL
	1088 0039 37	1	END PLATE	**(25/02/2019 - 24/07/2019)** (((CAPPRM:AS1210 , CAPPRM:CE , CAPPRM:MHLW , CAPPRM:MOM) + FREQ:50HZ + MOVOL:400V , (MOVOL:380V , MOVOL:460V) + CAPPRM:ASME + FREQ:60HZ) + CAPPRE:IEC , CAPPRE:ULCUL + CAPPRM:ASME + FREQ:60HZ + MOVOL:460V) + COOL:WATER **(25/07/2019 - 27/11/2019)** ((((MOVOL:380V , MOVOL:460V) + CAPPRM:ASME , CAPPRM:MHLW + MOVOL:460V) + FREQ:60HZ , (CAPPRM:AS1210 , CAPPRM:CE , CAPPRM:MHLW , CAPPRM:MOM) + FREQ:50HZ + MOVOL:400V) + CAPPRE:IEC , CAPPRE:ULCUL + CAPPRM:ASME + FREQ:60HZ + MOVOL:460V) + COOL:WATER **(28/11/2019 - ...)** ((((CAPPRM:AS1210 , CAPPRM:CE , CAPPRM:MHLW , CAPPRM:MOM) + MOVOL:400V , (CAPPRM:CE + MOVOL:500V , CAPPRM:MHLW + MOVOL:200V) + COOL:AIR) + FREQ:50HZ , ((CAPPRM:ASME , CAPPRM:MHLW) + MOVOL:460V , CAPPRM:ASME + COOL:WATER + MOVOL:380V) + FREQ:60HZ) + CAPPRE:IEC , ((MOVOL:230V , MOVOL:575V) + COOL:AIR , MOVOL:460V) + CAPPRE:ULCUL + CAPPRM:ASME + FREQ:60HZ)	1X4
	1088 0039 37	1	END PLATE	**(25/02/2019 - 24/07/2019)** (((CAPPRM:AS1210 , CAPPRM:CE , CAPPRM:MHLW , CAPPRM:MOM) + FREQ:50HZ + MOVOL:400V , (MOVOL:380V , MOVOL:460V) + CAPPRM:ASME + FREQ:60HZ) + CAPPRE:IEC , CAPPRE:ULCUL + CAPPRM:ASME + FREQ:60HZ + MOVOL:460V) + COOL:WATER **(25/07/2019 - 27/11/2019)** ((((MOVOL:380V , MOVOL:460V) + CAPPRM:ASME , CAPPRM:MHLW + MOVOL:460V) + FREQ:60HZ , (CAPPRM:AS1210 , CAPPRM:CE , CAPPRM:MHLW , CAPPRM:MOM) + FREQ:50HZ + MOVOL:400V) + CAPPRE:IEC , CAPPRE:ULCUL + CAPPRM:ASME + FREQ:60HZ + MOVOL:460V) + COOL:WATER **(28/11/2019 - ...)** ((((CAPPRM:AS1210 , CAPPRM:CE , CAPPRM:MHLW , CAPPRM:MOM) + MOVOL:400V , (CAPPRM:CE + MOVOL:500V , CAPPRM:MHLW + MOVOL:200V) + COOL:AIR) + FREQ:50HZ , ((CAPPRM:ASME , CAPPRM:MHLW) + MOVOL:460V , CAPPRM:ASME + COOL:WATER + MOVOL:380V) + FREQ:60HZ) + CAPPRE:IEC , ((MOVOL:230V , MOVOL:575V) + COOL:AIR , MOVOL:460V) + CAPPRE:ULCUL + CAPPRM:ASME + FREQ:60HZ)	1X6

Legend:

CAPPRE:IEC - Component approval electrical:IEC
CAPPRE:ULCUL - Component approval electrical:UL/cUL
CAPPRM:AS1210 - Component approval mechanical:AS1210
CAPPRM:ASME - Component approval mechanical:ASME
CAPPRM:CE - Component approval mechanical:CE
CAPPRM:MHLW - Component approval mechanical:MHLW
CAPPRM:MOM - Component approval mechanical:MOM
COOL:AIR - Cooling:Air cooled
COOL:WATER - Cooling:Water cooled
FREQ:50HZ - Frequency:50 Hz
FREQ:60HZ - Frequency:60 Hz
IDRY:Y - Integrated dryer:Yes
MODEL:GA75VP_16 - Model:GA 75VSD+
MOVOL:200V - Supply voltage:200 V
MOVOL:230V - Supply voltage:230 V
MOVOL:380V - Supply voltage:380 V
MOVOL:400V - Supply voltage:400 V
MOVOL:460V - Supply voltage:460 V
MOVOL:500V - Supply voltage:500 V
MOVOL:575V - Supply voltage:575 V

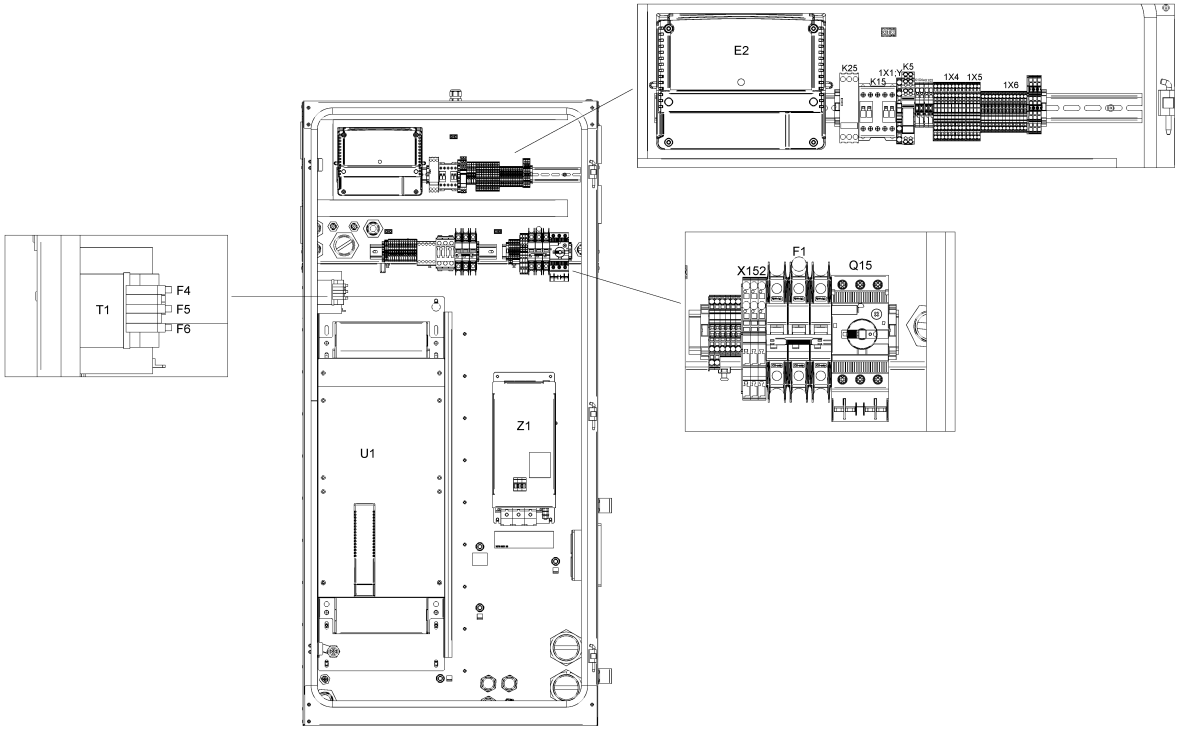
E2
K25
K15
1X1:Y
K5
1X4
1X5
1X6
T1
F4
F5
F6
U1
Z1
X152
F1
Q15

21.10 - Cubicle components GA 75L VSD+ - ((200V-400V-500V/50Hz, 460V/60Hz) - IEC, (230V-460V-575V/60Hz - UL-cUL)) - Full-Feature (28/11/2019 - ...)

(((MOVOL:200V , MOVOL:400V , MOVOL:500V) + FREQ:50HZ , FREQ:60HZ + MOVOL:460V) + CAPPRE:IEC , (MOVOL:230V , MOVOL:460V , MOVOL:575V) + CAPPRE:ULCUL + FREQ:60HZ) + IDRY:Y + MODEL:GA75VP_16

Ref	Part Number	Qty	Name	Validity	EL
	1088 0039 37	1	END PLATE	**(25/02/2019 - 24/07/2019)** (((CAPPRM:AS1210 , CAPPRM:CE , CAPPRM:MHLW , CAPPRM:MOM) + FREQ:50HZ + MOVOL:400V , (MOVOL:380V , MOVOL:460V) + CAPPRM:ASME + FREQ:60HZ) + CAPPRE:IEC , CAPPRE:ULCUL + CAPPRM:ASME + FREQ:60HZ + MOVOL:460V) + COOL:WATER **(25/07/2019 - 27/11/2019)** ((((MOVOL:380V , MOVOL:460V) + CAPPRM:ASME , CAPPRM:MHLW + MOVOL:460V) + FREQ:60HZ , (CAPPRM:AS1210 , CAPPRM:CE , CAPPRM:MHLW , CAPPRM:MOM) + FREQ:50HZ + MOVOL:400V) + CAPPRE:IEC , CAPPRE:ULCUL + CAPPRM:ASME + FREQ:60HZ + MOVOL:460V) + COOL:WATER **(28/11/2019 - ...)** ((((CAPPRM:AS1210 , CAPPRM:CE , CAPPRM:MHLW , CAPPRM:MOM) + MOVOL:400V , (CAPPRM:CE + MOVOL:500V , CAPPRM:MHLW + MOVOL:200V) + COOL:AIR) + FREQ:50HZ , ((CAPPRM:ASME , CAPPRM:MHLW) + MOVOL:460V , CAPPRM:ASME + COOL:WATER + MOVOL:380V) + FREQ:60HZ) + CAPPRE:IEC , ((MOVOL:230V , MOVOL:575V) + COOL:AIR , MOVOL:460V) + CAPPRE:ULCUL + CAPPRM:ASME + FREQ:60HZ)	1X1:Y/D
	1088 0037 81	1	CONNECTOR	**(25/02/2019 - 24/07/2019)** (((CAPPRM:AS1210 , CAPPRM:CE , CAPPRM:MHLW , CAPPRM:MOM) + FREQ:50HZ + MOVOL:400V , (MOVOL:380V , MOVOL:460V) + CAPPRM:ASME + FREQ:60HZ) + CAPPRE:IEC , CAPPRE:ULCUL + CAPPRM:ASME + FREQ:60HZ + MOVOL:460V) + COOL:WATER **(25/07/2019 - 27/11/2019)** ((((MOVOL:380V , MOVOL:460V) + CAPPRM:ASME , CAPPRM:MHLW + MOVOL:460V) + FREQ:60HZ , (CAPPRM:AS1210 , CAPPRM:CE , CAPPRM:MHLW , CAPPRM:MOM) + FREQ:50HZ + MOVOL:400V) + CAPPRE:IEC , CAPPRE:ULCUL + CAPPRM:ASME + FREQ:60HZ + MOVOL:460V) + COOL:WATER **(28/11/2019 - ...)** ((((CAPPRM:AS1210 , CAPPRM:CE , CAPPRM:MHLW , CAPPRM:MOM) + MOVOL:400V , (CAPPRM:CE + MOVOL:500V , CAPPRM:MHLW + MOVOL:200V) + COOL:AIR) + FREQ:50HZ , ((CAPPRM:ASME , CAPPRM:MHLW) + MOVOL:460V , CAPPRM:ASME + COOL:WATER + MOVOL:380V) + FREQ:60HZ) + CAPPRE:IEC , ((MOVOL:230V , MOVOL:575V) + COOL:AIR , MOVOL:460V) + CAPPRE:ULCUL + CAPPRM:ASME + FREQ:60HZ)	2X27

Legend:

CAPPRE:IEC - Component approval electrical:IEC
CAPPRE:ULCUL - Component approval electrical:UL/cUL
CAPPRM:AS1210 - Component approval mechanical:AS1210
CAPPRM:ASME - Component approval mechanical:ASME
CAPPRM:CE - Component approval mechanical:CE
CAPPRM:MHLW - Component approval mechanical:MHLW
CAPPRM:MOM - Component approval mechanical:MOM
COOL:AIR - Cooling:Air cooled
COOL:WATER - Cooling:Water cooled
FREQ:50HZ - Frequency:50 Hz
FREQ:60HZ - Frequency:60 Hz
IDRY:Y - Integrated dryer:Yes
MODEL:GA75VP_16 - Model:GA 75VSD+
MOVOL:200V - Supply voltage:200 V
MOVOL:230V - Supply voltage:230 V
MOVOL:380V - Supply voltage:380 V
MOVOL:400V - Supply voltage:400 V
MOVOL:460V - Supply voltage:460 V
MOVOL:500V - Supply voltage:500 V
MOVOL:575V - Supply voltage:575 V

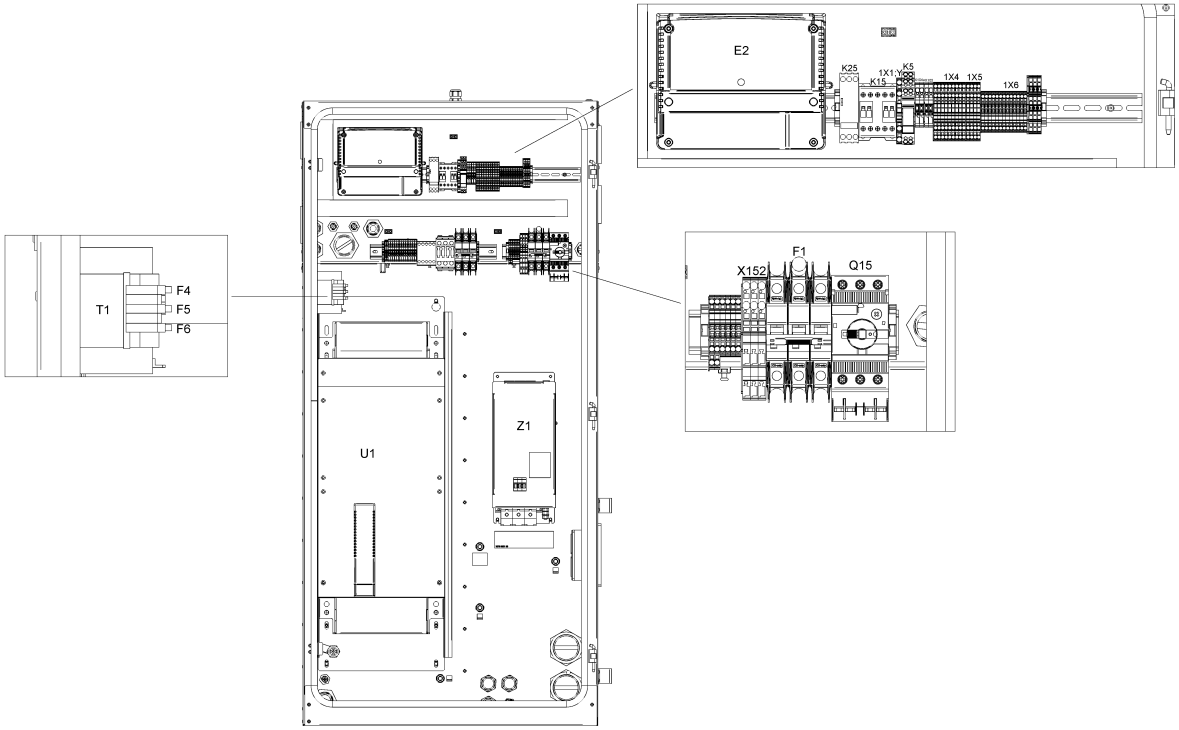
E2
K25
K15
1X1:Y
K5
1X4
1X5
1X6
T1
F4
F5
F6
U1
Z1
X152
F1
Q15

21.10 - Cubicle components GA 75L VSD+ - ((200V-400V-500V/50Hz, 460V/60Hz) - IEC, (230V-460V-575V/60Hz - UL-cUL)) - Full-Feature (28/11/2019 - ...)

(((MOVOL:200V , MOVOL:400V , MOVOL:500V) + FREQ:50HZ , FREQ:60HZ + MOVOL:460V) + CAPPRE:IEC , (MOVOL:230V , MOVOL:460V , MOVOL:575V) + CAPPRE:ULCUL + FREQ:60HZ) + IDRY:Y + MODEL:GA75VP_16

Ref	Part Number	Qty	Name	Validity	EL
	1088 0037 80	1	CONNECTOR	**(25/02/2019 - 24/07/2019)** (((CAPPRM:AS1210 , CAPPRM:CE , CAPPRM:MHLW , CAPPRM:MOM) + FREQ:50HZ + MOVOL:400V , (MOVOL:380V , MOVOL:460V) + CAPPRM:ASME + FREQ:60HZ) + CAPPRE:IEC , CAPPRE:ULCUL + CAPPRM:ASME + FREQ:60HZ + MOVOL:460V) + COOL:WATER **(25/07/2019 - 27/11/2019)** ((((MOVOL:380V , MOVOL:460V) + CAPPRM:ASME , CAPPRM:MHLW + MOVOL:460V) + FREQ:60HZ , (CAPPRM:AS1210 , CAPPRM:CE , CAPPRM:MHLW , CAPPRM:MOM) + FREQ:50HZ + MOVOL:400V) + CAPPRE:IEC , CAPPRE:ULCUL + CAPPRM:ASME + FREQ:60HZ + MOVOL:460V) + COOL:WATER **(28/11/2019 - ...)** ((((CAPPRM:AS1210 , CAPPRM:CE , CAPPRM:MHLW , CAPPRM:MOM) + MOVOL:400V , (CAPPRM:CE + MOVOL:500V , CAPPRM:MHLW + MOVOL:200V) + COOL:AIR) + FREQ:50HZ , ((CAPPRM:ASME , CAPPRM:MHLW) + MOVOL:460V , CAPPRM:ASME + COOL:WATER + MOVOL:380V) + FREQ:60HZ) + CAPPRE:IEC , ((MOVOL:230V , MOVOL:575V) + COOL:AIR , MOVOL:460V) + CAPPRE:ULCUL + CAPPRM:ASME + FREQ:60HZ)	2X28
	1088 0031 32	1	CONNECTOR	**(25/02/2019 - 24/07/2019)** (((CAPPRM:AS1210 , CAPPRM:CE , CAPPRM:MHLW , CAPPRM:MOM) + FREQ:50HZ + MOVOL:400V , (MOVOL:380V , MOVOL:460V) + CAPPRM:ASME + FREQ:60HZ) + CAPPRE:IEC , CAPPRE:ULCUL + CAPPRM:ASME + FREQ:60HZ + MOVOL:460V) + COOL:WATER **(25/07/2019 - 27/11/2019)** ((((MOVOL:380V , MOVOL:460V) + CAPPRM:ASME , CAPPRM:MHLW + MOVOL:460V) + FREQ:60HZ , (CAPPRM:AS1210 , CAPPRM:CE , CAPPRM:MHLW , CAPPRM:MOM) + FREQ:50HZ + MOVOL:400V) + CAPPRE:IEC , CAPPRE:ULCUL + CAPPRM:ASME + FREQ:60HZ + MOVOL:460V) + COOL:WATER **(28/11/2019 - ...)** ((((CAPPRM:AS1210 , CAPPRM:CE , CAPPRM:MHLW , CAPPRM:MOM) + MOVOL:400V , (CAPPRM:CE + MOVOL:500V , CAPPRM:MHLW + MOVOL:200V) + COOL:AIR) + FREQ:50HZ , ((CAPPRM:ASME , CAPPRM:MHLW) + MOVOL:460V , CAPPRM:ASME + COOL:WATER + MOVOL:380V) + FREQ:60HZ) + CAPPRE:IEC , ((MOVOL:230V , MOVOL:575V) + COOL:AIR , MOVOL:460V) + CAPPRE:ULCUL + CAPPRM:ASME + FREQ:60HZ)	2X30

Legend:

CAPPRE:IEC - Component approval electrical:IEC
CAPPRE:ULCUL - Component approval electrical:UL/cUL
CAPPRM:AS1210 - Component approval mechanical:AS1210
CAPPRM:ASME - Component approval mechanical:ASME
CAPPRM:CE - Component approval mechanical:CE
CAPPRM:MHLW - Component approval mechanical:MHLW
CAPPRM:MOM - Component approval mechanical:MOM
COOL:AIR - Cooling:Air cooled
COOL:WATER - Cooling:Water cooled
FREQ:50HZ - Frequency:50 Hz
FREQ:60HZ - Frequency:60 Hz
IDRY:Y - Integrated dryer:Yes
MODEL:GA75VP_16 - Model:GA 75VSD+
MOVOL:200V - Supply voltage:200 V
MOVOL:230V - Supply voltage:230 V
MOVOL:380V - Supply voltage:380 V
MOVOL:400V - Supply voltage:400 V
MOVOL:460V - Supply voltage:460 V
MOVOL:500V - Supply voltage:500 V
MOVOL:575V - Supply voltage:575 V

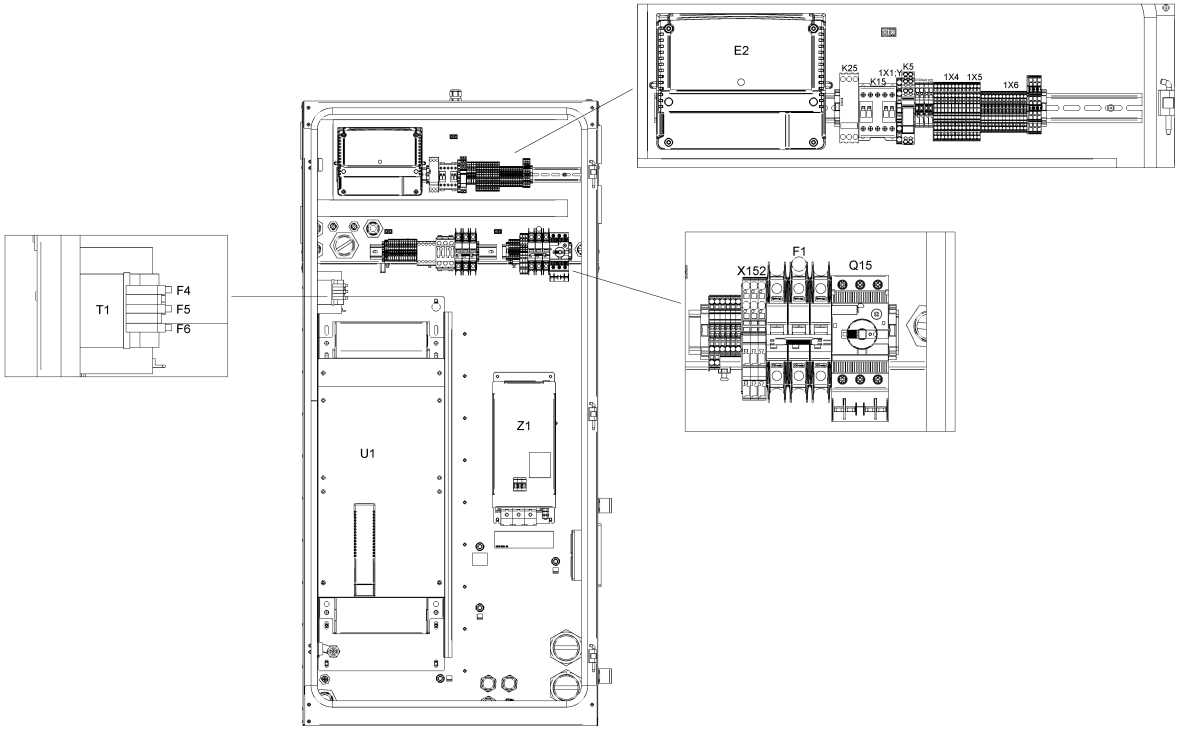
E2
K25
K15
1X1:Y
K5
1X4
1X5
1X6
T1
F4
F5
F6
U1
Z1
X152
F1
Q15

21.10 - Cubicle components GA 75L VSD+ - ((200V-400V-500V/50Hz, 460V/60Hz) - IEC, (230V-460V-575V/60Hz - UL-cUL)) - Full-Feature (28/11/2019 - ...)

(((MOVOL:200V , MOVOL:400V , MOVOL:500V) + FREQ:50HZ , FREQ:60HZ + MOVOL:460V) + CAPPRE:IEC , (MOVOL:230V , MOVOL:460V , MOVOL:575V) + CAPPRE:ULCUL + FREQ:60HZ) + IDRY:Y + MODEL:GA75VP_16

Ref	Part Number	Qty	Name	Validity	EL
	1088 0031 26	1	CONNECTOR 6-POLE	**(25/02/2019 - 24/07/2019)** (((CAPPRM:AS1210 , CAPPRM:CE , CAPPRM:MHLW , CAPPRM:MOM) + FREQ:50HZ + MOVOL:400V , (MOVOL:380V , MOVOL:460V) + CAPPRM:ASME + FREQ:60HZ) + CAPPRE:IEC , CAPPRE:ULCUL + CAPPRM:ASME + FREQ:60HZ + MOVOL:460V) + COOL:WATER **(25/07/2019 - 27/11/2019)** ((((MOVOL:380V , MOVOL:460V) + CAPPRM:ASME , CAPPRM:MHLW + MOVOL:460V) + FREQ:60HZ , (CAPPRM:AS1210 , CAPPRM:CE , CAPPRM:MHLW , CAPPRM:MOM) + FREQ:50HZ + MOVOL:400V) + CAPPRE:IEC , CAPPRE:ULCUL + CAPPRM:ASME + FREQ:60HZ + MOVOL:460V) + COOL:WATER **(28/11/2019 - ...)** ((((CAPPRM:AS1210 , CAPPRM:CE , CAPPRM:MHLW , CAPPRM:MOM) + MOVOL:400V , (CAPPRM:CE + MOVOL:500V , CAPPRM:MHLW + MOVOL:200V) + COOL:AIR) + FREQ:50HZ , ((CAPPRM:ASME , CAPPRM:MHLW) + MOVOL:460V , CAPPRM:ASME + COOL:WATER + MOVOL:380V) + FREQ:60HZ) + CAPPRE:IEC , ((MOVOL:230V , MOVOL:575V) + COOL:AIR , MOVOL:460V) + CAPPRE:ULCUL + CAPPRM:ASME + FREQ:60HZ)	2X31
	~~1089 9664 06~~	1	SWITCH	**(25/02/2019 - 24/07/2019)** (((CAPPRM:AS1210 , CAPPRM:CE , CAPPRM:MHLW , CAPPRM:MOM) + FREQ:50HZ + MOVOL:400V , (MOVOL:380V , MOVOL:460V) + CAPPRM:ASME + FREQ:60HZ) + CAPPRE:IEC , CAPPRE:ULCUL + CAPPRM:ASME + FREQ:60HZ + MOVOL:460V) + COOL:WATER **(25/07/2019 - 27/11/2019)** ((((MOVOL:380V , MOVOL:460V) + CAPPRM:ASME , CAPPRM:MHLW + MOVOL:460V) + FREQ:60HZ , (CAPPRM:AS1210 , CAPPRM:CE , CAPPRM:MHLW , CAPPRM:MOM) + FREQ:50HZ + MOVOL:400V) + CAPPRE:IEC , CAPPRE:ULCUL + CAPPRM:ASME + FREQ:60HZ + MOVOL:460V) + COOL:WATER **(28/11/2019 - ...)** ((((CAPPRM:AS1210 , CAPPRM:CE , CAPPRM:MHLW , CAPPRM:MOM) + MOVOL:400V , (CAPPRM:CE + MOVOL:500V , CAPPRM:MHLW + MOVOL:200V) + COOL:AIR) + FREQ:50HZ , ((CAPPRM:ASME , CAPPRM:MHLW) + MOVOL:460V , CAPPRM:ASME + COOL:WATER + MOVOL:380V) + FREQ:60HZ) + CAPPRE:IEC , ((MOVOL:230V , MOVOL:575V) + COOL:AIR , MOVOL:460V) + CAPPRE:ULCUL + CAPPRM:ASME + FREQ:60HZ)	Q15
	Substituted by:	1089 9551 97 - AUX.CONTACT CIRCUIT BREAKER (quantity: 1)			

Legend:

CAPPRE:IEC - Component approval electrical:IEC
CAPPRE:ULCUL - Component approval electrical:UL/cUL
CAPPRM:AS1210 - Component approval mechanical:AS1210
CAPPRM:ASME - Component approval mechanical:ASME
CAPPRM:CE - Component approval mechanical:CE
CAPPRM:MHLW - Component approval mechanical:MHLW
CAPPRM:MOM - Component approval mechanical:MOM
COOL:AIR - Cooling:Air cooled
COOL:WATER - Cooling:Water cooled
FREQ:50HZ - Frequency:50 Hz
FREQ:60HZ - Frequency:60 Hz
IDRY:Y - Integrated dryer:Yes
MODEL:GA75VP_16 - Model:GA 75VSD+
MOVOL:200V - Supply voltage:200 V
MOVOL:230V - Supply voltage:230 V
MOVOL:380V - Supply voltage:380 V
MOVOL:400V - Supply voltage:400 V
MOVOL:460V - Supply voltage:460 V
MOVOL:500V - Supply voltage:500 V
MOVOL:575V - Supply voltage:575 V

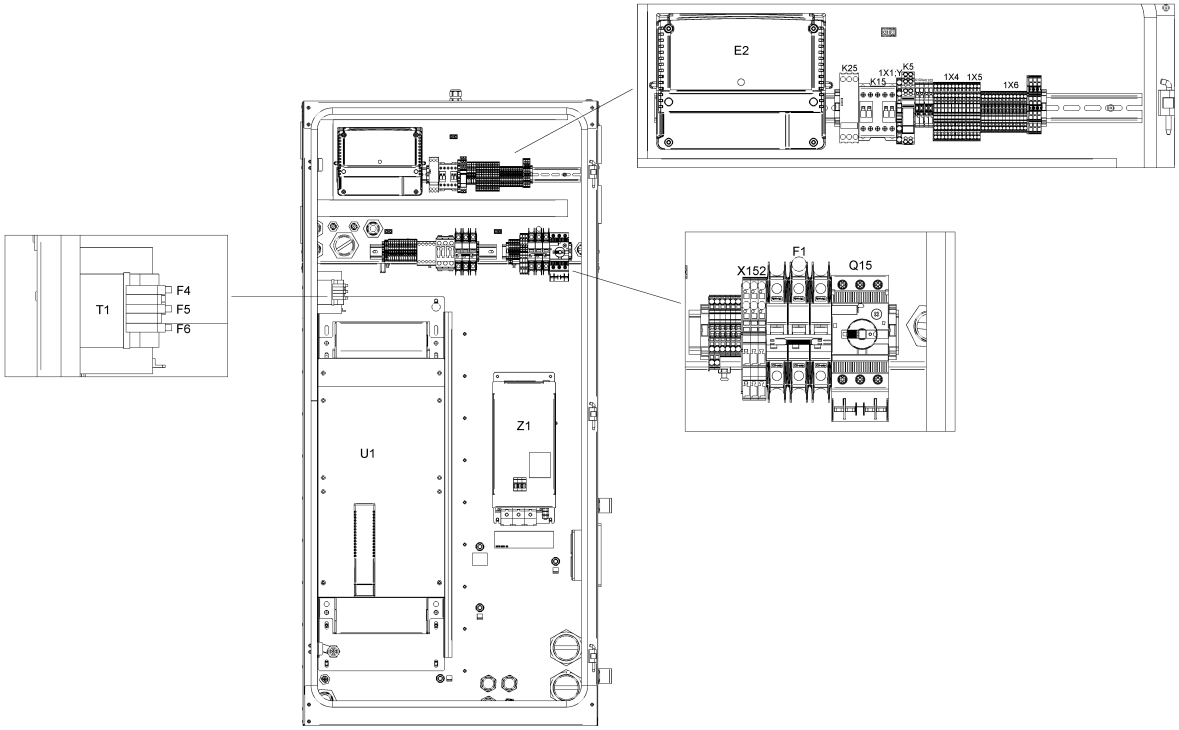
E2
K25
K15
1X1:Y
K5
1X4
1X5
1X6
T1
F4
F5
F6
U1
Z1
X152
F1
Q15

21.10 - Cubicle components GA 75L VSD+ - ((200V-400V-500V/50Hz, 460V/60Hz) - IEC, (230V-460V-575V/60Hz - UL-cUL)) - Full-Feature (28/11/2019 - ...)

(((MOVOL:200V , MOVOL:400V , MOVOL:500V) + FREQ:50HZ , FREQ:60HZ + MOVOL:460V) + CAPPRE:IEC , (MOVOL:230V , MOVOL:460V , MOVOL:575V) + CAPPRE:ULCUL + FREQ:60HZ) + IDRY:Y + MODEL:GA75VP_16

Ref	Part Number	Qty	Name	Validity	EL
	1089 9551 18	1	CIRCUIT BREAKER	**(25/02/2019 - 24/07/2019)** (((CAPPRM:AS1210 , CAPPRM:CE , CAPPRM:MHLW , CAPPRM:MOM) + FREQ:50HZ + MOVOL:400V , (MOVOL:380V , MOVOL:460V) + CAPPRM:ASME + FREQ:60HZ) + CAPPRE:IEC , CAPPRE:ULCUL + CAPPRM:ASME + FREQ:60HZ + MOVOL:460V) + COOL:WATER **(25/07/2019 - 27/11/2019)** ((((MOVOL:380V , MOVOL:460V) + CAPPRM:ASME , CAPPRM:MHLW + MOVOL:460V) + FREQ:60HZ , (CAPPRM:AS1210 , CAPPRM:CE , CAPPRM:MHLW , CAPPRM:MOM) + FREQ:50HZ + MOVOL:400V) + CAPPRE:IEC , CAPPRE:ULCUL + CAPPRM:ASME + FREQ:60HZ + MOVOL:460V) + COOL:WATER **(28/11/2019 - ...)** ((((CAPPRM:AS1210 , CAPPRM:CE , CAPPRM:MHLW , CAPPRM:MOM) + MOVOL:400V , (CAPPRM:CE + MOVOL:500V , CAPPRM:MHLW + MOVOL:200V) + COOL:AIR) + FREQ:50HZ , ((CAPPRM:ASME , CAPPRM:MHLW) + MOVOL:460V , CAPPRM:ASME + COOL:WATER + MOVOL:380V) + FREQ:60HZ) + CAPPRE:IEC , ((MOVOL:230V , MOVOL:575V) + COOL:AIR , MOVOL:460V) + CAPPRE:ULCUL + CAPPRM:ASME + FREQ:60HZ)	Q15
	1088 0038 26	1	TERMINAL	**(25/02/2019 - 24/07/2019)** (((CAPPRM:AS1210 , CAPPRM:CE , CAPPRM:MHLW , CAPPRM:MOM) + FREQ:50HZ + MOVOL:400V , (MOVOL:380V , MOVOL:460V) + CAPPRM:ASME + FREQ:60HZ) + CAPPRE:IEC , CAPPRE:ULCUL + CAPPRM:ASME + FREQ:60HZ + MOVOL:460V) + COOL:WATER **(25/07/2019 - 27/11/2019)** ((((MOVOL:380V , MOVOL:460V) + CAPPRM:ASME , CAPPRM:MHLW + MOVOL:460V) + FREQ:60HZ , (CAPPRM:AS1210 , CAPPRM:CE , CAPPRM:MHLW , CAPPRM:MOM) + FREQ:50HZ + MOVOL:400V) + CAPPRE:IEC , CAPPRE:ULCUL + CAPPRM:ASME + FREQ:60HZ + MOVOL:460V) + COOL:WATER **(28/11/2019 - ...)** ((((CAPPRM:AS1210 , CAPPRM:CE , CAPPRM:MHLW , CAPPRM:MOM) + MOVOL:400V , (CAPPRM:CE + MOVOL:500V , CAPPRM:MHLW + MOVOL:200V) + COOL:AIR) + FREQ:50HZ , ((CAPPRM:ASME , CAPPRM:MHLW) + MOVOL:460V , CAPPRM:ASME + COOL:WATER + MOVOL:380V) + FREQ:60HZ) + CAPPRE:IEC , ((MOVOL:230V , MOVOL:575V) + COOL:AIR , MOVOL:460V) + CAPPRE:ULCUL + CAPPRM:ASME + FREQ:60HZ)	1X1:Y/D

Legend:

CAPPRE:IEC - Component approval electrical:IEC
CAPPRE:ULCUL - Component approval electrical:UL/cUL
CAPPRM:AS1210 - Component approval mechanical:AS1210
CAPPRM:ASME - Component approval mechanical:ASME
CAPPRM:CE - Component approval mechanical:CE
CAPPRM:MHLW - Component approval mechanical:MHLW
CAPPRM:MOM - Component approval mechanical:MOM
COOL:AIR - Cooling:Air cooled
COOL:WATER - Cooling:Water cooled
FREQ:50HZ - Frequency:50 Hz
FREQ:60HZ - Frequency:60 Hz
IDRY:Y - Integrated dryer:Yes
MODEL:GA75VP_16 - Model:GA 75VSD+
MOVOL:200V - Supply voltage:200 V
MOVOL:230V - Supply voltage:230 V
MOVOL:380V - Supply voltage:380 V
MOVOL:400V - Supply voltage:400 V
MOVOL:460V - Supply voltage:460 V
MOVOL:500V - Supply voltage:500 V
MOVOL:575V - Supply voltage:575 V

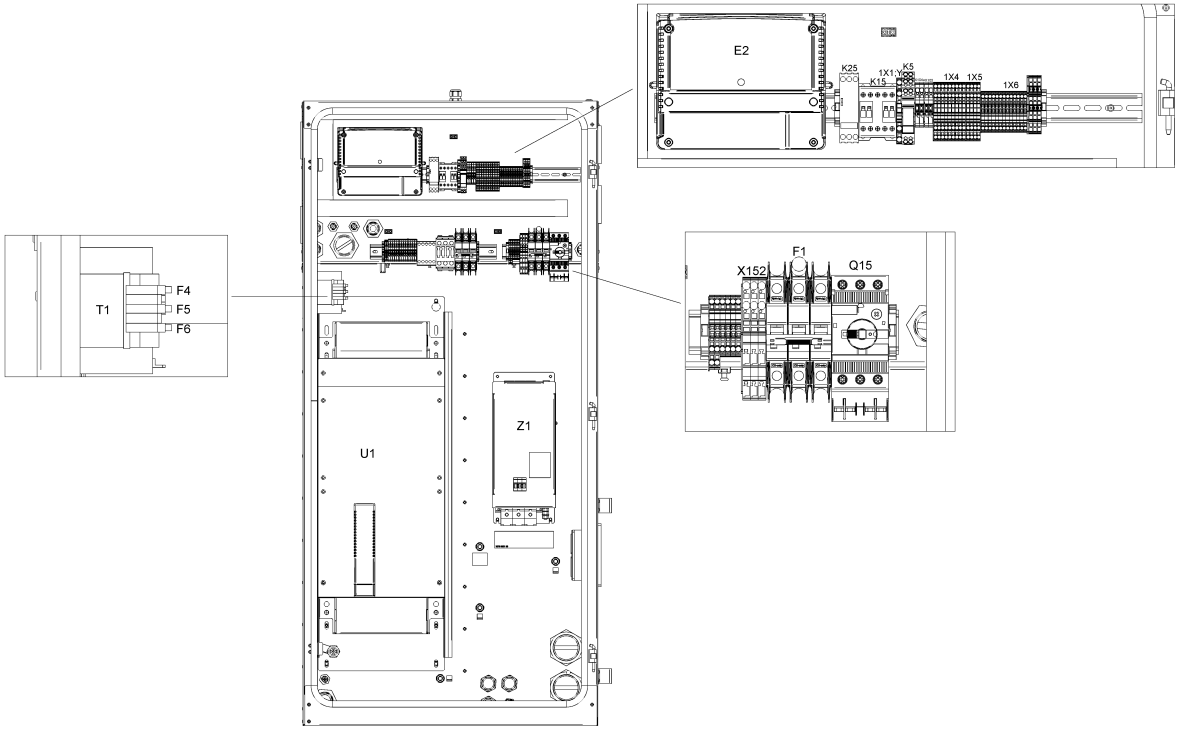
E2
K25
K15
1X1:Y
K5
1X4
1X5
1X6
T1
F4
F5
F6
U1
Z1
X152
F1
Q15

Ref	Part Number	Qty	Name	Validity	EL
	1089 9602 79	1	CONTACTOR 110 V	**(25/02/2019 - 24/07/2019)** (((CAPPRM:AS1210 , CAPPRM:CE , CAPPRM:MHLW , CAPPRM:MOM) + FREQ:50HZ + MOVOL:400V , (MOVOL:380V , MOVOL:460V) + CAPPRM:ASME + FREQ:60HZ) + CAPPRE:IEC , CAPPRE:ULCUL + CAPPRM:ASME + FREQ:60HZ + MOVOL:460V) + COOL:WATER **(25/07/2019 - 27/11/2019)** ((((MOVOL:380V , MOVOL:460V) + CAPPRM:ASME , CAPPRM:MHLW + MOVOL:460V) + FREQ:60HZ , (CAPPRM:AS1210 , CAPPRM:CE , CAPPRM:MHLW , CAPPRM:MOM) + FREQ:50HZ + MOVOL:400V) + CAPPRE:IEC , CAPPRE:ULCUL + CAPPRM:ASME + FREQ:60HZ + MOVOL:460V) + COOL:WATER **(28/11/2019 - ...)** ((((CAPPRM:AS1210 , CAPPRM:CE , CAPPRM:MHLW , CAPPRM:MOM) + MOVOL:400V , (CAPPRM:CE + MOVOL:500V , CAPPRM:MHLW + MOVOL:200V) + COOL:AIR) + FREQ:50HZ , ((CAPPRM:ASME , CAPPRM:MHLW) + MOVOL:460V , CAPPRM:ASME + COOL:WATER + MOVOL:380V) + FREQ:60HZ) + CAPPRE:IEC , ((MOVOL:230V , MOVOL:575V) + COOL:AIR , MOVOL:460V) + CAPPRE:ULCUL + CAPPRM:ASME + FREQ:60HZ)	K15
	1089 9461 26	1	PHASE SEQUENCE RELAY	**(25/02/2019 - 24/07/2019)** (((CAPPRM:AS1210 , CAPPRM:CE , CAPPRM:MHLW , CAPPRM:MOM) + FREQ:50HZ + MOVOL:400V , (MOVOL:380V , MOVOL:460V) + CAPPRM:ASME + FREQ:60HZ) + CAPPRE:IEC , CAPPRE:ULCUL + CAPPRM:ASME + FREQ:60HZ + MOVOL:460V) + COOL:WATER **(25/07/2019 - 27/11/2019)** ((((MOVOL:380V , MOVOL:460V) + CAPPRM:ASME , CAPPRM:MHLW + MOVOL:460V) + FREQ:60HZ , (CAPPRM:AS1210 , CAPPRM:CE , CAPPRM:MHLW , CAPPRM:MOM) + FREQ:50HZ + MOVOL:400V) + CAPPRE:IEC , CAPPRE:ULCUL + CAPPRM:ASME + FREQ:60HZ + MOVOL:460V) + COOL:WATER **(28/11/2019 - ...)** ((((CAPPRM:AS1210 , CAPPRM:CE , CAPPRM:MHLW , CAPPRM:MOM) + MOVOL:400V , (CAPPRM:CE + MOVOL:500V , CAPPRM:MHLW + MOVOL:200V) + COOL:AIR) + FREQ:50HZ , ((CAPPRM:ASME , CAPPRM:MHLW) + MOVOL:460V , CAPPRM:ASME + COOL:WATER + MOVOL:380V) + FREQ:60HZ) + CAPPRE:IEC , ((MOVOL:230V , MOVOL:575V) + COOL:AIR , MOVOL:460V) + CAPPRE:ULCUL + CAPPRM:ASME + FREQ:60HZ)	K25

Legend:

CAPPRE:IEC - Component approval electrical:IEC
CAPPRE:ULCUL - Component approval electrical:UL/cUL
CAPPRM:AS1210 - Component approval mechanical:AS1210
CAPPRM:ASME - Component approval mechanical:ASME
CAPPRM:CE - Component approval mechanical:CE
CAPPRM:MHLW - Component approval mechanical:MHLW
CAPPRM:MOM - Component approval mechanical:MOM
COOL:AIR - Cooling:Air cooled
COOL:WATER - Cooling:Water cooled
FREQ:50HZ - Frequency:50 Hz
FREQ:60HZ - Frequency:60 Hz
IDRY:Y - Integrated dryer:Yes
MODEL:GA75VP_16 - Model:GA 75VSD+
MOVOL:200V - Supply voltage:200 V
MOVOL:230V - Supply voltage:230 V
MOVOL:380V - Supply voltage:380 V
MOVOL:400V - Supply voltage:400 V
MOVOL:460V - Supply voltage:460 V
MOVOL:500V - Supply voltage:500 V
MOVOL:575V - Supply voltage:575 V

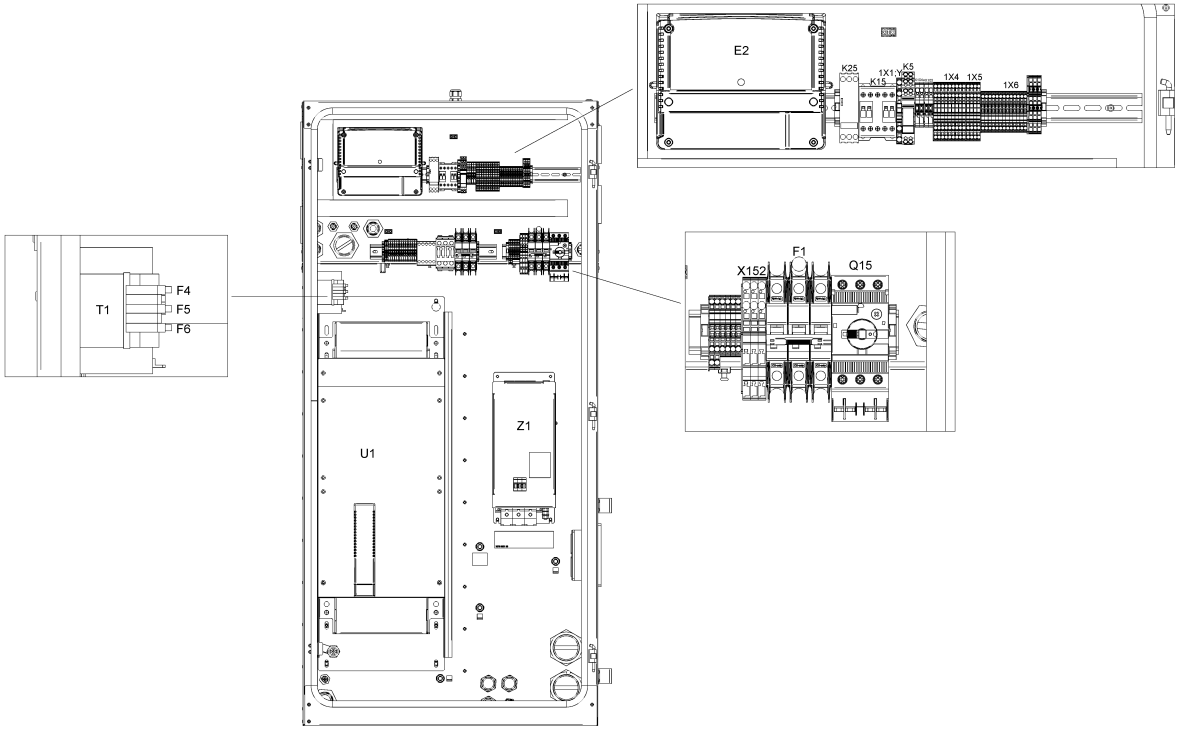
E2
K25
K15
1X1:Y
K5
1X4
1X5
1X6
T1
F4
F5
F6
U1
Z1
X152
F1
Q15

Ref	Part Number	Qty	Name	Validity	EL
	1088 0032 17	1	RELAY 115 VAC	**(25/02/2019 - 24/07/2019)** (((CAPPRM:AS1210 , CAPPRM:CE , CAPPRM:MHLW , CAPPRM:MOM) + FREQ:50HZ + MOVOL:400V , (MOVOL:380V , MOVOL:460V) + CAPPRM:ASME + FREQ:60HZ) + CAPPRE:IEC , CAPPRE:ULCUL + CAPPRM:ASME + FREQ:60HZ + MOVOL:460V) + COOL:WATER **(25/07/2019 - 27/11/2019)** ((((MOVOL:380V , MOVOL:460V) + CAPPRM:ASME , CAPPRM:MHLW + MOVOL:460V) + FREQ:60HZ , (CAPPRM:AS1210 , CAPPRM:CE , CAPPRM:MHLW , CAPPRM:MOM) + FREQ:50HZ + MOVOL:400V) + CAPPRE:IEC , CAPPRE:ULCUL + CAPPRM:ASME + FREQ:60HZ + MOVOL:460V) + COOL:WATER **(28/11/2019 - ...)** ((((CAPPRM:AS1210 , CAPPRM:CE , CAPPRM:MHLW , CAPPRM:MOM) + MOVOL:400V , (CAPPRM:CE + MOVOL:500V , CAPPRM:MHLW + MOVOL:200V) + COOL:AIR) + FREQ:50HZ , ((CAPPRM:ASME , CAPPRM:MHLW) + MOVOL:460V , CAPPRM:ASME + COOL:WATER + MOVOL:380V) + FREQ:60HZ) + CAPPRE:IEC , ((MOVOL:230V , MOVOL:575V) + COOL:AIR , MOVOL:460V) + CAPPRE:ULCUL + CAPPRM:ASME + FREQ:60HZ)	K5
	0991 8011 21	AR	CABLE TRAY	**(25/02/2019 - 24/07/2019)** (((CAPPRM:AS1210 , CAPPRM:CE , CAPPRM:MHLW , CAPPRM:MOM) + FREQ:50HZ + MOVOL:400V , (MOVOL:380V , MOVOL:460V) + CAPPRM:ASME + FREQ:60HZ) + CAPPRE:IEC , CAPPRE:ULCUL + CAPPRM:ASME + FREQ:60HZ + MOVOL:460V) + COOL:WATER **(25/07/2019 - 27/11/2019)** ((((MOVOL:380V , MOVOL:460V) + CAPPRM:ASME , CAPPRM:MHLW + MOVOL:460V) + FREQ:60HZ , (CAPPRM:AS1210 , CAPPRM:CE , CAPPRM:MHLW , CAPPRM:MOM) + FREQ:50HZ + MOVOL:400V) + CAPPRE:IEC , CAPPRE:ULCUL + CAPPRM:ASME + FREQ:60HZ + MOVOL:460V) + COOL:WATER **(28/11/2019 - ...)** ((((CAPPRM:AS1210 , CAPPRM:CE , CAPPRM:MHLW , CAPPRM:MOM) + MOVOL:400V , (CAPPRM:CE + MOVOL:500V , CAPPRM:MHLW + MOVOL:200V) + COOL:AIR) + FREQ:50HZ , ((CAPPRM:ASME , CAPPRM:MHLW) + MOVOL:460V , CAPPRM:ASME + COOL:WATER + MOVOL:380V) + FREQ:60HZ) + CAPPRE:IEC , ((MOVOL:230V , MOVOL:575V) + COOL:AIR , MOVOL:460V) + CAPPRE:ULCUL + CAPPRM:ASME + FREQ:60HZ)	L=1384mm

Legend:

CAPPRE:IEC - Component approval electrical:IEC
CAPPRE:ULCUL - Component approval electrical:UL/cUL
CAPPRM:AS1210 - Component approval mechanical:AS1210
CAPPRM:ASME - Component approval mechanical:ASME
CAPPRM:CE - Component approval mechanical:CE
CAPPRM:MHLW - Component approval mechanical:MHLW
CAPPRM:MOM - Component approval mechanical:MOM
COOL:AIR - Cooling:Air cooled
COOL:WATER - Cooling:Water cooled
FREQ:50HZ - Frequency:50 Hz
FREQ:60HZ - Frequency:60 Hz
IDRY:Y - Integrated dryer:Yes
MODEL:GA75VP_16 - Model:GA 75VSD+
MOVOL:200V - Supply voltage:200 V
MOVOL:230V - Supply voltage:230 V
MOVOL:380V - Supply voltage:380 V
MOVOL:400V - Supply voltage:400 V
MOVOL:460V - Supply voltage:460 V
MOVOL:500V - Supply voltage:500 V
MOVOL:575V - Supply voltage:575 V

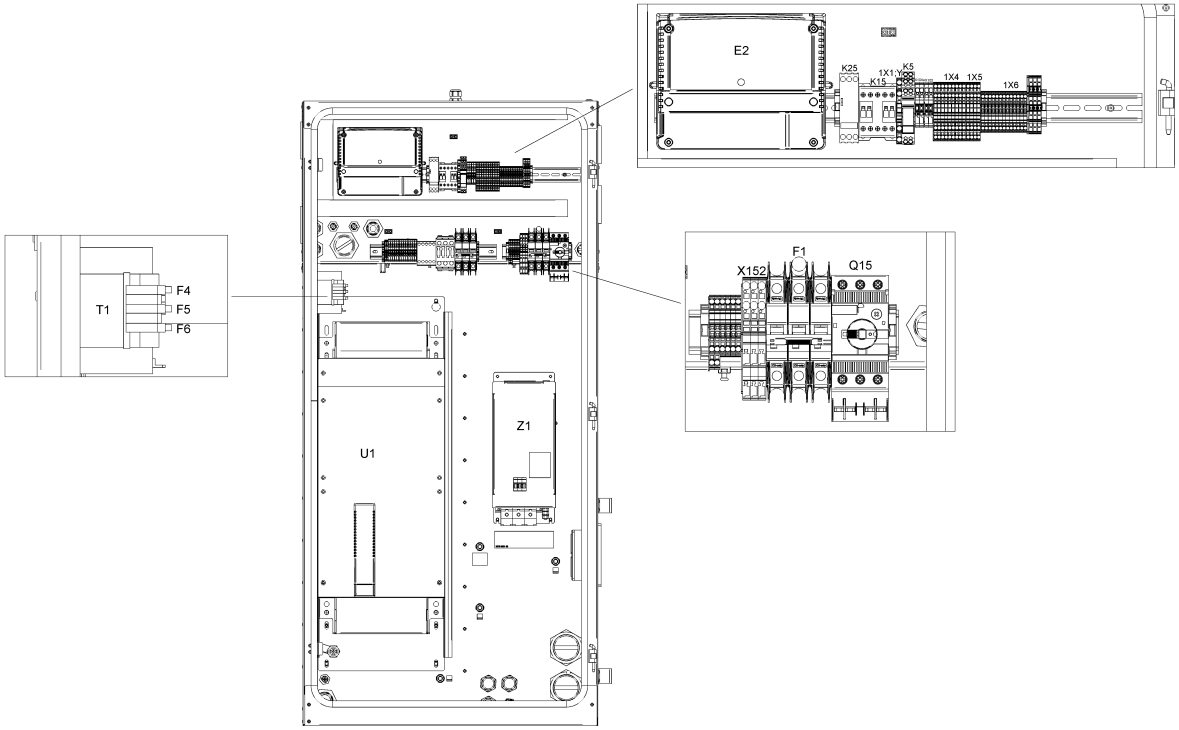
E2
K25
K15
1X1:Y
K5
1X4
1X5
1X6
T1
F4
F5
F6
U1
Z1
X152
F1
Q15

21.10 - Cubicle components GA 75L VSD+ - ((200V-400V-500V/50Hz, 460V/60Hz) - IEC, (230V-460V-575V/60Hz - UL-cUL)) - Full-Feature (28/11/2019 - ...)

(((MOVOL:200V , MOVOL:400V , MOVOL:500V) + FREQ:50HZ , FREQ:60HZ + MOVOL:460V) + CAPPRE:IEC , (MOVOL:230V , MOVOL:460V , MOVOL:575V) + CAPPRE:ULCUL + FREQ:60HZ) + IDRY:Y + MODEL:GA75VP_16

Ref	Part Number	Qty	Name	Validity	EL
	1900 2203 02	1	DRYER RAIL	**(25/02/2019 - 24/07/2019)** (((CAPPRM:AS1210 , CAPPRM:CE , CAPPRM:MHLW , CAPPRM:MOM) + FREQ:50HZ + MOVOL:400V , (MOVOL:380V , MOVOL:460V) + CAPPRM:ASME + FREQ:60HZ) + CAPPRE:IEC , CAPPRE:ULCUL + CAPPRM:ASME + FREQ:60HZ + MOVOL:460V) + COOL:WATER **(25/07/2019 - 27/11/2019)** ((((MOVOL:380V , MOVOL:460V) + CAPPRM:ASME , CAPPRM:MHLW + MOVOL:460V) + FREQ:60HZ , (CAPPRM:AS1210 , CAPPRM:CE , CAPPRM:MHLW , CAPPRM:MOM) + FREQ:50HZ + MOVOL:400V) + CAPPRE:IEC , CAPPRE:ULCUL + CAPPRM:ASME + FREQ:60HZ + MOVOL:460V) + COOL:WATER **(28/11/2019 - ...)** ((((CAPPRM:AS1210 , CAPPRM:CE , CAPPRM:MHLW , CAPPRM:MOM) + MOVOL:400V , (CAPPRM:CE + MOVOL:500V , CAPPRM:MHLW + MOVOL:200V) + COOL:AIR) + FREQ:50HZ , ((CAPPRM:ASME , CAPPRM:MHLW) + MOVOL:460V , CAPPRM:ASME + COOL:WATER + MOVOL:380V) + FREQ:60HZ) + CAPPRE:IEC , ((MOVOL:230V , MOVOL:575V) + COOL:AIR , MOVOL:460V) + CAPPRE:ULCUL + CAPPRM:ASME + FREQ:60HZ)	
	Electrical legend:	Without trafo on dryer			
	1088 0031 13	1	CONNECTOR 13-POLE	**(25/02/2019 - 24/07/2019)** (((CAPPRM:AS1210 , CAPPRM:CE , CAPPRM:MHLW , CAPPRM:MOM) + FREQ:50HZ + MOVOL:400V , (MOVOL:380V , MOVOL:460V) + CAPPRM:ASME + FREQ:60HZ) + CAPPRE:IEC , CAPPRE:ULCUL + CAPPRM:ASME + FREQ:60HZ + MOVOL:460V) + COOL:WATER **(25/07/2019 - 27/11/2019)** ((((MOVOL:380V , MOVOL:460V) + CAPPRM:ASME , CAPPRM:MHLW + MOVOL:460V) + FREQ:60HZ , (CAPPRM:AS1210 , CAPPRM:CE , CAPPRM:MHLW , CAPPRM:MOM) + FREQ:50HZ + MOVOL:400V) + CAPPRE:IEC , CAPPRE:ULCUL + CAPPRM:ASME + FREQ:60HZ + MOVOL:460V) + COOL:WATER **(28/11/2019 - ...)** ((((CAPPRM:AS1210 , CAPPRM:CE , CAPPRM:MHLW , CAPPRM:MOM) + MOVOL:400V , (CAPPRM:CE + MOVOL:500V , CAPPRM:MHLW + MOVOL:200V) + COOL:AIR) + FREQ:50HZ , ((CAPPRM:ASME , CAPPRM:MHLW) + MOVOL:460V , CAPPRM:ASME + COOL:WATER + MOVOL:380V) + FREQ:60HZ) + CAPPRE:IEC , ((MOVOL:230V , MOVOL:575V) + COOL:AIR , MOVOL:460V) + CAPPRE:ULCUL + CAPPRM:ASME + FREQ:60HZ)	1X30

Legend:

CAPPRE:IEC - Component approval electrical:IEC
CAPPRE:ULCUL - Component approval electrical:UL/cUL
CAPPRM:AS1210 - Component approval mechanical:AS1210
CAPPRM:ASME - Component approval mechanical:ASME
CAPPRM:CE - Component approval mechanical:CE
CAPPRM:MHLW - Component approval mechanical:MHLW
CAPPRM:MOM - Component approval mechanical:MOM
COOL:AIR - Cooling:Air cooled
COOL:WATER - Cooling:Water cooled
FREQ:50HZ - Frequency:50 Hz
FREQ:60HZ - Frequency:60 Hz
IDRY:Y - Integrated dryer:Yes
MODEL:GA75VP_16 - Model:GA 75VSD+
MOVOL:200V - Supply voltage:200 V
MOVOL:230V - Supply voltage:230 V
MOVOL:380V - Supply voltage:380 V
MOVOL:400V - Supply voltage:400 V
MOVOL:460V - Supply voltage:460 V
MOVOL:500V - Supply voltage:500 V
MOVOL:575V - Supply voltage:575 V

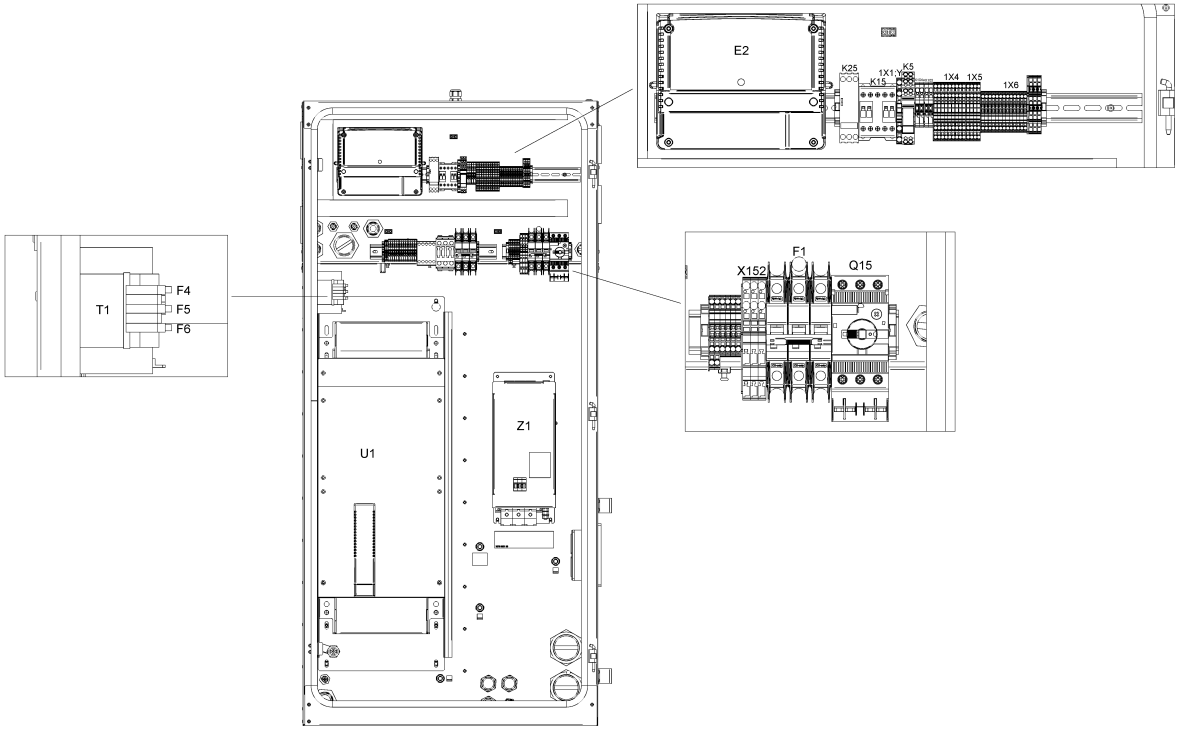
E2
K25
K15
1X1:Y
K5
1X4
1X5
1X6
T1
F4
F5
F6
U1
Z1
X152
F1
Q15

21.10 - Cubicle components GA 75L VSD+ - ((200V-400V-500V/50Hz, 460V/60Hz) - IEC, (230V-460V-575V/60Hz - UL-cUL)) - Full-Feature (28/11/2019 - ...)

(((MOVOL:200V , MOVOL:400V , MOVOL:500V) + FREQ:50HZ , FREQ:60HZ + MOVOL:460V) + CAPPRE:IEC , (MOVOL:230V , MOVOL:460V , MOVOL:575V) + CAPPRE:ULCUL + FREQ:60HZ) + IDRY:Y + MODEL:GA75VP_16

Ref	Part Number	Qty	Name	Validity	EL
	1088 0037 82	1	CONNECTOR	**(25/02/2019 - 24/07/2019)** (((CAPPRM:AS1210 , CAPPRM:CE , CAPPRM:MHLW , CAPPRM:MOM) + FREQ:50HZ + MOVOL:400V , (MOVOL:380V , MOVOL:460V) + CAPPRM:ASME + FREQ:60HZ) + CAPPRE:IEC , CAPPRE:ULCUL + CAPPRM:ASME + FREQ:60HZ + MOVOL:460V) + COOL:WATER **(25/07/2019 - 27/11/2019)** ((((MOVOL:380V , MOVOL:460V) + CAPPRM:ASME , CAPPRM:MHLW + MOVOL:460V) + FREQ:60HZ , (CAPPRM:AS1210 , CAPPRM:CE , CAPPRM:MHLW , CAPPRM:MOM) + FREQ:50HZ + MOVOL:400V) + CAPPRE:IEC , CAPPRE:ULCUL + CAPPRM:ASME + FREQ:60HZ + MOVOL:460V) + COOL:WATER **(28/11/2019 - ...)** ((((CAPPRM:AS1210 , CAPPRM:CE , CAPPRM:MHLW , CAPPRM:MOM) + MOVOL:400V , (CAPPRM:CE + MOVOL:500V , CAPPRM:MHLW + MOVOL:200V) + COOL:AIR) + FREQ:50HZ , ((CAPPRM:ASME , CAPPRM:MHLW) + MOVOL:460V , CAPPRM:ASME + COOL:WATER + MOVOL:380V) + FREQ:60HZ) + CAPPRE:IEC , ((MOVOL:230V , MOVOL:575V) + COOL:AIR , MOVOL:460V) + CAPPRE:ULCUL + CAPPRM:ASME + FREQ:60HZ)	3X34
	0697 9811 13	1	PLUG	**(25/02/2019 - 24/07/2019)** (((CAPPRM:AS1210 , CAPPRM:CE , CAPPRM:MHLW , CAPPRM:MOM) + FREQ:50HZ + MOVOL:400V , (MOVOL:380V , MOVOL:460V) + CAPPRM:ASME + FREQ:60HZ) + CAPPRE:IEC , CAPPRE:ULCUL + CAPPRM:ASME + FREQ:60HZ + MOVOL:460V) + COOL:WATER **(25/07/2019 - 27/11/2019)** ((((MOVOL:380V , MOVOL:460V) + CAPPRM:ASME , CAPPRM:MHLW + MOVOL:460V) + FREQ:60HZ , (CAPPRM:AS1210 , CAPPRM:CE , CAPPRM:MHLW , CAPPRM:MOM) + FREQ:50HZ + MOVOL:400V) + CAPPRE:IEC , CAPPRE:ULCUL + CAPPRM:ASME + FREQ:60HZ + MOVOL:460V) + COOL:WATER **(28/11/2019 - ...)** ((((CAPPRM:AS1210 , CAPPRM:CE , CAPPRM:MHLW , CAPPRM:MOM) + MOVOL:400V , (CAPPRM:CE + MOVOL:500V , CAPPRM:MHLW + MOVOL:200V) + COOL:AIR) + FREQ:50HZ , ((CAPPRM:ASME , CAPPRM:MHLW) + MOVOL:460V , CAPPRM:ASME + COOL:WATER + MOVOL:380V) + FREQ:60HZ) + CAPPRE:IEC , ((MOVOL:230V , MOVOL:575V) + COOL:AIR , MOVOL:460V) + CAPPRE:ULCUL + CAPPRM:ASME + FREQ:60HZ)	

Electrical legend: Energy recovery

Legend:

CAPPRE:IEC - Component approval electrical:IEC
CAPPRE:ULCUL - Component approval electrical:UL/cUL
CAPPRM:AS1210 - Component approval mechanical:AS1210
CAPPRM:ASME - Component approval mechanical:ASME
CAPPRM:CE - Component approval mechanical:CE
CAPPRM:MHLW - Component approval mechanical:MHLW
CAPPRM:MOM - Component approval mechanical:MOM
COOL:AIR - Cooling:Air cooled
COOL:WATER - Cooling:Water cooled
FREQ:50HZ - Frequency:50 Hz
FREQ:60HZ - Frequency:60 Hz
IDRY:Y - Integrated dryer:Yes
MODEL:GA75VP_16 - Model:GA 75VSD+
MOVOL:200V - Supply voltage:200 V
MOVOL:230V - Supply voltage:230 V
MOVOL:380V - Supply voltage:380 V
MOVOL:400V - Supply voltage:400 V
MOVOL:460V - Supply voltage:460 V
MOVOL:500V - Supply voltage:500 V
MOVOL:575V - Supply voltage:575 V

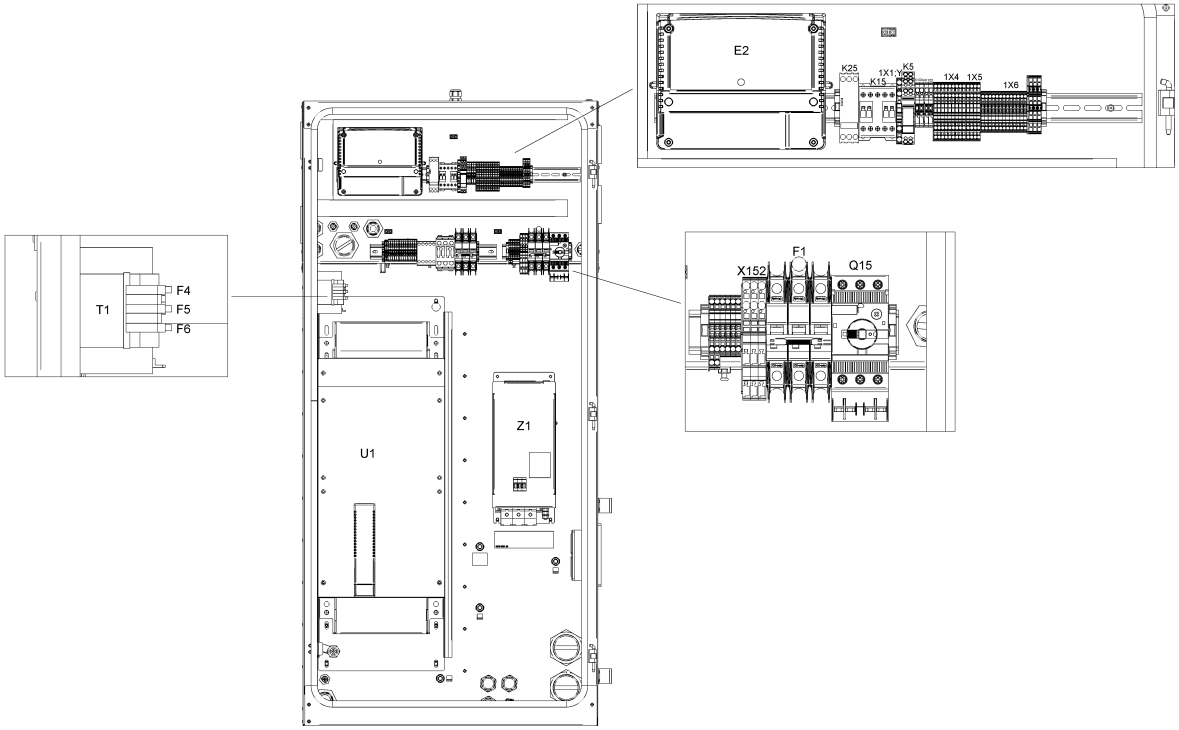
E2
K25
K15
1X1:Y
K5
1X4
1X5
1X6
T1
F4
F5
F6
U1
Z1
X152
F1
Q15

Ref	Part Number	Qty	Name	Validity	EL
	0989 3700 44	1	LOCKNUT	**(25/02/2019 - 24/07/2019)** (((CAPPRM:AS1210 , CAPPRM:CE , CAPPRM:MHLW , CAPPRM:MOM) + FREQ:50HZ + MOVOL:400V , (MOVOL:380V , MOVOL:460V) + CAPPRM:ASME + FREQ:60HZ) + CAPPRE:IEC , CAPPRE:ULCUL + CAPPRM:ASME + FREQ:60HZ + MOVOL:460V) + COOL:WATER **(25/07/2019 - 27/11/2019)** ((((MOVOL:380V , MOVOL:460V) + CAPPRM:ASME , CAPPRM:MHLW + MOVOL:460V) + FREQ:60HZ , (CAPPRM:AS1210 , CAPPRM:CE , CAPPRM:MHLW , CAPPRM:MOM) + FREQ:50HZ + MOVOL:400V) + CAPPRE:IEC , CAPPRE:ULCUL + CAPPRM:ASME + FREQ:60HZ + MOVOL:460V) + COOL:WATER **(28/11/2019 - ...)** ((((CAPPRM:AS1210 , CAPPRM:CE , CAPPRM:MHLW , CAPPRM:MOM) + MOVOL:400V , (CAPPRM:CE + MOVOL:500V , CAPPRM:MHLW + MOVOL:200V) + COOL:AIR) + FREQ:50HZ , ((CAPPRM:ASME , CAPPRM:MHLW) + MOVOL:460V , CAPPRM:ASME + COOL:WATER + MOVOL:380V) + FREQ:60HZ) + CAPPRE:IEC , ((MOVOL:230V , MOVOL:575V) + COOL:AIR , MOVOL:460V) + CAPPRE:ULCUL + CAPPRM:ASME + FREQ:60HZ)	
	Electrical legend:	Energy recovery			
	0697 9811 12	1	PLUG	**(25/02/2019 - 24/07/2019)** (((CAPPRM:AS1210 , CAPPRM:CE , CAPPRM:MHLW , CAPPRM:MOM) + FREQ:50HZ + MOVOL:400V , (MOVOL:380V , MOVOL:460V) + CAPPRM:ASME + FREQ:60HZ) + CAPPRE:IEC , CAPPRE:ULCUL + CAPPRM:ASME + FREQ:60HZ + MOVOL:460V) + COOL:WATER **(25/07/2019 - 27/11/2019)** ((((MOVOL:380V , MOVOL:460V) + CAPPRM:ASME , CAPPRM:MHLW + MOVOL:460V) + FREQ:60HZ , (CAPPRM:AS1210 , CAPPRM:CE , CAPPRM:MHLW , CAPPRM:MOM) + FREQ:50HZ + MOVOL:400V) + CAPPRE:IEC , CAPPRE:ULCUL + CAPPRM:ASME + FREQ:60HZ + MOVOL:460V) + COOL:WATER **(28/11/2019 - ...)** ((((CAPPRM:AS1210 , CAPPRM:CE , CAPPRM:MHLW , CAPPRM:MOM) + MOVOL:400V , (CAPPRM:CE + MOVOL:500V , CAPPRM:MHLW + MOVOL:200V) + COOL:AIR) + FREQ:50HZ , ((CAPPRM:ASME , CAPPRM:MHLW) + MOVOL:460V , CAPPRM:ASME + COOL:WATER + MOVOL:380V) + FREQ:60HZ) + CAPPRE:IEC , ((MOVOL:230V , MOVOL:575V) + COOL:AIR , MOVOL:460V) + CAPPRE:ULCUL + CAPPRM:ASME + FREQ:60HZ)	
	Electrical legend:	Control circuit of T10			

Legend:

CAPPRE:IEC - Component approval electrical:IEC
CAPPRE:ULCUL - Component approval electrical:UL/cUL
CAPPRM:AS1210 - Component approval mechanical:AS1210
CAPPRM:ASME - Component approval mechanical:ASME
CAPPRM:CE - Component approval mechanical:CE
CAPPRM:MHLW - Component approval mechanical:MHLW
CAPPRM:MOM - Component approval mechanical:MOM
COOL:AIR - Cooling:Air cooled
COOL:WATER - Cooling:Water cooled
FREQ:50HZ - Frequency:50 Hz
FREQ:60HZ - Frequency:60 Hz
IDRY:Y - Integrated dryer:Yes
MODEL:GA75VP_16 - Model:GA 75VSD+
MOVOL:200V - Supply voltage:200 V
MOVOL:230V - Supply voltage:230 V
MOVOL:380V - Supply voltage:380 V
MOVOL:400V - Supply voltage:400 V
MOVOL:460V - Supply voltage:460 V
MOVOL:500V - Supply voltage:500 V
MOVOL:575V - Supply voltage:575 V

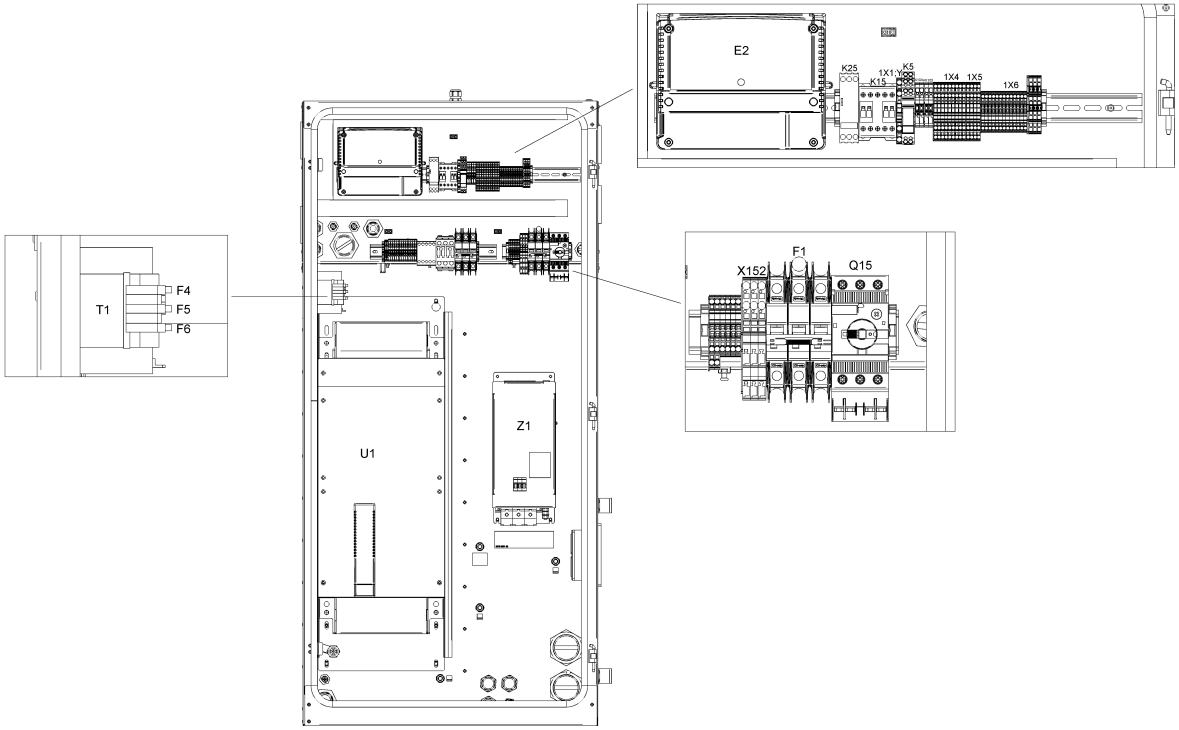
E2
K25
K15
1X1:Y
K5
1X4
1X5
1X6
T1
F4
F5
F6
U1
Z1
X152
F1
Q15

Ref	Part Number	Qty	Name	Validity	EL
	0989 3700 43	1	NUT	**(25/02/2019 - 24/07/2019)** (((CAPPRM:AS1210 , CAPPRM:CE , CAPPRM:MHLW , CAPPRM:MOM) + FREQ:50HZ + MOVOL:400V , (MOVOL:380V , MOVOL:460V) + CAPPRM:ASME + FREQ:60HZ) + CAPPRE:IEC , CAPPRE:ULCUL + CAPPRM:ASME + FREQ:60HZ + MOVOL:460V) + COOL:WATER **(25/07/2019 - 27/11/2019)** ((((MOVOL:380V , MOVOL:460V) + CAPPRM:ASME , CAPPRM:MHLW + MOVOL:460V) + FREQ:60HZ , (CAPPRM:AS1210 , CAPPRM:CE , CAPPRM:MHLW , CAPPRM:MOM) + FREQ:50HZ + MOVOL:400V) + CAPPRE:IEC , CAPPRE:ULCUL + CAPPRM:ASME + FREQ:60HZ + MOVOL:460V) + COOL:WATER **(28/11/2019 - ...)** ((((CAPPRM:AS1210 , CAPPRM:CE , CAPPRM:MHLW , CAPPRM:MOM) + MOVOL:400V , (CAPPRM:CE + MOVOL:500V , CAPPRM:MHLW + MOVOL:200V) + COOL:AIR) + FREQ:50HZ , ((CAPPRM:ASME , CAPPRM:MHLW) + MOVOL:460V , CAPPRM:ASME + COOL:WATER + MOVOL:380V) + FREQ:60HZ) + CAPPRE:IEC , ((MOVOL:230V , MOVOL:575V) + COOL:AIR , MOVOL:460V) + CAPPRE:ULCUL + CAPPRM:ASME + FREQ:60HZ)	
	Electrical legend:	Control circuit of T10			
	0697 9811 10	1	PLUG	**(25/02/2019 - 24/07/2019)** (((CAPPRM:AS1210 , CAPPRM:CE , CAPPRM:MHLW , CAPPRM:MOM) + FREQ:50HZ + MOVOL:400V , (MOVOL:380V , MOVOL:460V) + CAPPRM:ASME + FREQ:60HZ) + CAPPRE:IEC , CAPPRE:ULCUL + CAPPRM:ASME + FREQ:60HZ + MOVOL:460V) + COOL:WATER **(25/07/2019 - 27/11/2019)** ((((MOVOL:380V , MOVOL:460V) + CAPPRM:ASME , CAPPRM:MHLW + MOVOL:460V) + FREQ:60HZ , (CAPPRM:AS1210 , CAPPRM:CE , CAPPRM:MHLW , CAPPRM:MOM) + FREQ:50HZ + MOVOL:400V) + CAPPRE:IEC , CAPPRE:ULCUL + CAPPRM:ASME + FREQ:60HZ + MOVOL:460V) + COOL:WATER **(28/11/2019 - ...)** ((((CAPPRM:AS1210 , CAPPRM:CE , CAPPRM:MHLW , CAPPRM:MOM) + MOVOL:400V , (CAPPRM:CE + MOVOL:500V , CAPPRM:MHLW + MOVOL:200V) + COOL:AIR) + FREQ:50HZ , ((CAPPRM:ASME , CAPPRM:MHLW) + MOVOL:460V , CAPPRM:ASME + COOL:WATER + MOVOL:380V) + FREQ:60HZ) + CAPPRE:IEC , ((MOVOL:230V , MOVOL:575V) + COOL:AIR , MOVOL:460V) + CAPPRE:ULCUL + CAPPRM:ASME + FREQ:60HZ)	
	Electrical legend:	Plug for smartbox hole			

Legend:

CAPPRE:IEC - Component approval electrical:IEC
CAPPRE:ULCUL - Component approval electrical:UL/cUL
CAPPRM:AS1210 - Component approval mechanical:AS1210
CAPPRM:ASME - Component approval mechanical:ASME
CAPPRM:CE - Component approval mechanical:CE
CAPPRM:MHLW - Component approval mechanical:MHLW
CAPPRM:MOM - Component approval mechanical:MOM
COOL:AIR - Cooling:Air cooled
COOL:WATER - Cooling:Water cooled
FREQ:50HZ - Frequency:50 Hz
FREQ:60HZ - Frequency:60 Hz
IDRY:Y - Integrated dryer:Yes
MODEL:GA75VP_16 - Model:GA 75VSD+
MOVOL:200V - Supply voltage:200 V
MOVOL:230V - Supply voltage:230 V
MOVOL:380V - Supply voltage:380 V
MOVOL:400V - Supply voltage:400 V
MOVOL:460V - Supply voltage:460 V
MOVOL:500V - Supply voltage:500 V
MOVOL:575V - Supply voltage:575 V

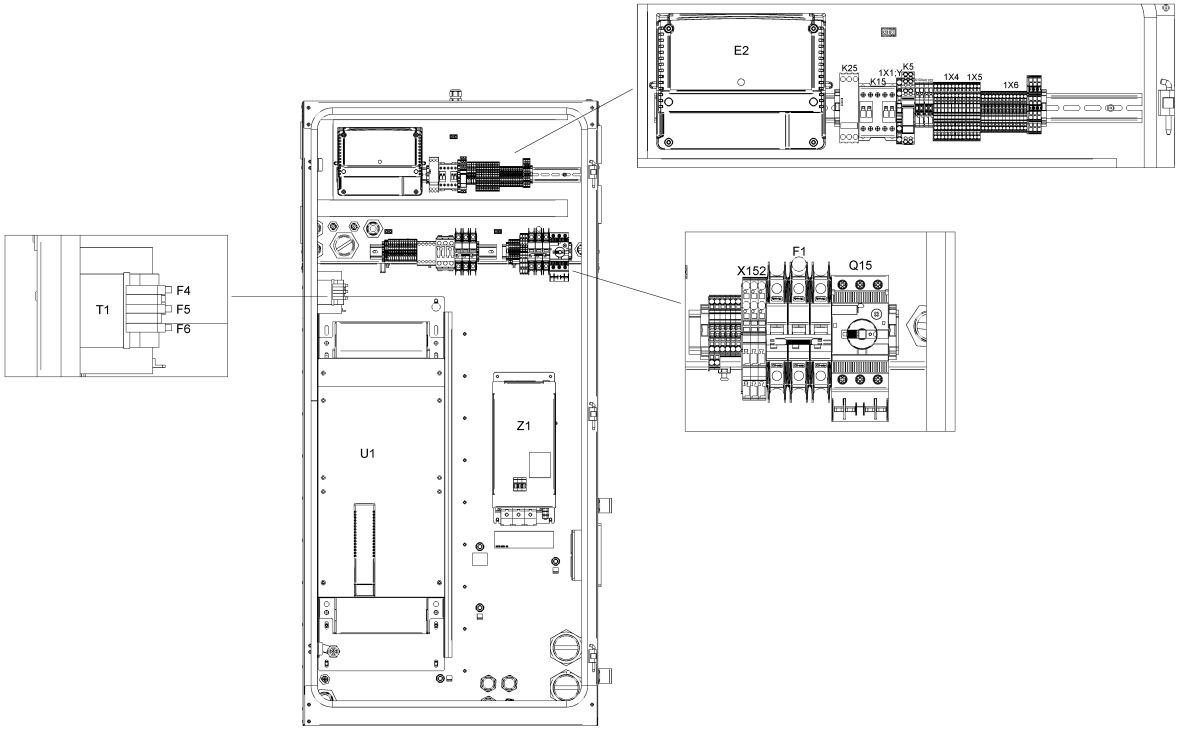
E2
K25
K15
1X1:Y
K5
1X4
1X5
1X6
T1
F4
F5
F6
U1
Z1
X152
F1
Q15

Ref	Part Number	Qty	Name	Validity	EL
	0989 3700 41	1	LOCKNUT	**(25/02/2019 - 24/07/2019)** (((CAPPRM:AS1210 , CAPPRM:CE , CAPPRM:MHLW , CAPPRM:MOM) + FREQ:50HZ + MOVOL:400V , (MOVOL:380V , MOVOL:460V) + CAPPRM:ASME + FREQ:60HZ) + CAPPRE:IEC , CAPPRE:ULCUL + CAPPRM:ASME + FREQ:60HZ + MOVOL:460V) + COOL:WATER **(25/07/2019 - 27/11/2019)** ((((MOVOL:380V , MOVOL:460V) + CAPPRM:ASME , CAPPRM:MHLW + MOVOL:460V) + FREQ:60HZ , (CAPPRM:AS1210 , CAPPRM:CE , CAPPRM:MHLW , CAPPRM:MOM) + FREQ:50HZ + MOVOL:400V) + CAPPRE:IEC , CAPPRE:ULCUL + CAPPRM:ASME + FREQ:60HZ + MOVOL:460V) + COOL:WATER **(28/11/2019 - ...)** ((((CAPPRM:AS1210 , CAPPRM:CE , CAPPRM:MHLW , CAPPRM:MOM) + MOVOL:400V , (CAPPRM:CE + MOVOL:500V , CAPPRM:MHLW + MOVOL:200V) + COOL:AIR) + FREQ:50HZ , ((CAPPRM:ASME , CAPPRM:MHLW) + MOVOL:460V , CAPPRM:ASME + COOL:WATER + MOVOL:380V) + FREQ:60HZ) + CAPPRE:IEC , ((MOVOL:230V , MOVOL:575V) + COOL:AIR , MOVOL:460V) + CAPPRE:ULCUL + CAPPRM:ASME + FREQ:60HZ)	
	Electrical legend:	Nut for smartbox hole			
	1089 9556 37	1	AIR INLET WITH FILTER	**(25/02/2019 - 24/07/2019)** (((CAPPRM:AS1210 , CAPPRM:CE , CAPPRM:MHLW , CAPPRM:MOM) + FREQ:50HZ + MOVOL:400V , (MOVOL:380V , MOVOL:460V) + CAPPRM:ASME + FREQ:60HZ) + CAPPRE:IEC , CAPPRE:ULCUL + CAPPRM:ASME + FREQ:60HZ + MOVOL:460V) + COOL:WATER **(25/07/2019 - 27/11/2019)** ((((MOVOL:380V , MOVOL:460V) + CAPPRM:ASME , CAPPRM:MHLW + MOVOL:460V) + FREQ:60HZ , (CAPPRM:AS1210 , CAPPRM:CE , CAPPRM:MHLW , CAPPRM:MOM) + FREQ:50HZ + MOVOL:400V) + CAPPRE:IEC , CAPPRE:ULCUL + CAPPRM:ASME + FREQ:60HZ + MOVOL:460V) + COOL:WATER **(28/11/2019 - ...)** ((((CAPPRM:AS1210 , CAPPRM:CE , CAPPRM:MHLW , CAPPRM:MOM) + MOVOL:400V , (CAPPRM:CE + MOVOL:500V , CAPPRM:MHLW + MOVOL:200V) + COOL:AIR) + FREQ:50HZ , ((CAPPRM:ASME , CAPPRM:MHLW) + MOVOL:460V , CAPPRM:ASME + COOL:WATER + MOVOL:380V) + FREQ:60HZ) + CAPPRE:IEC , ((MOVOL:230V , MOVOL:575V) + COOL:AIR , MOVOL:460V) + CAPPRE:ULCUL + CAPPRM:ASME + FREQ:60HZ)	Fan Filter

Legend:

CAPPRE:IEC - Component approval electrical:IEC
CAPPRE:ULCUL - Component approval electrical:UL/cUL
CAPPRM:AS1210 - Component approval mechanical:AS1210
CAPPRM:ASME - Component approval mechanical:ASME
CAPPRM:CE - Component approval mechanical:CE
CAPPRM:MHLW - Component approval mechanical:MHLW
CAPPRM:MOM - Component approval mechanical:MOM
COOL:AIR - Cooling:Air cooled
COOL:WATER - Cooling:Water cooled
FREQ:50HZ - Frequency:50 Hz
FREQ:60HZ - Frequency:60 Hz
IDRY:Y - Integrated dryer:Yes
MODEL:GA75VP_16 - Model:GA 75VSD+
MOVOL:200V - Supply voltage:200 V
MOVOL:230V - Supply voltage:230 V
MOVOL:380V - Supply voltage:380 V
MOVOL:400V - Supply voltage:400 V
MOVOL:460V - Supply voltage:460 V
MOVOL:500V - Supply voltage:500 V
MOVOL:575V - Supply voltage:575 V

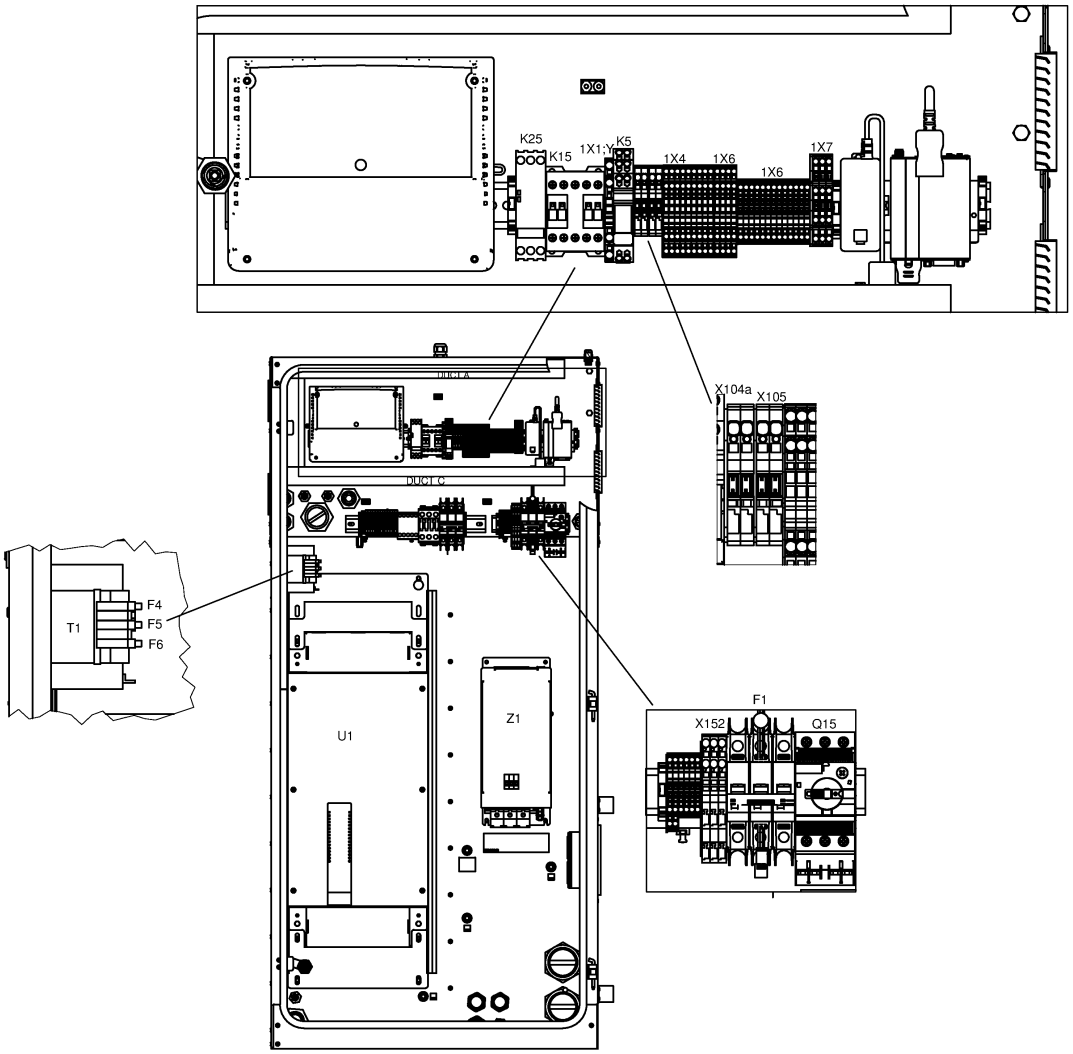
K25
K15
1X1:Y
K5
1X4
1X6
1X6
1X7
DUCT A
DUCT C
X104a
X105
T1
F4
F5
F6
U1
Z1
F1
X152
Q15

Ref	Part Number	Qty	Name	Validity	EL
	1900 2202 03	1	CUBICLE	**(20/07/2017 - 11/12/2018)**	
	9820 3000 21	1	CUBICLE LAYOUT	**(20/07/2017 - 20/08/2018)** (CAPPRM:ASME + MOVOL:380V , CAPPRM:MHLW + MOVOL:200V) + COOL:AIR **(21/08/2018 - 11/12/2018)** (CAPPRM:ASME + MOVOL:380V , CAPPRM:MHLW + COOL:AIR + MOVOL:200V)	-
	9820 3000 22	1	SERVICE DIAGRAM	**(20/07/2017 - 20/08/2018)** (CAPPRM:ASME + MOVOL:380V , CAPPRM:MHLW + MOVOL:200V) + COOL:AIR **(21/08/2018 - 11/12/2018)** (CAPPRM:ASME + MOVOL:380V , CAPPRM:MHLW + COOL:AIR + MOVOL:200V)	-
	1622 3798 70	1	WIRE HARNESS COMM CABLE	**(20/07/2017 - 20/08/2018)** (CAPPRM:ASME + MOVOL:380V , CAPPRM:MHLW + MOVOL:200V) + COOL:AIR **(21/08/2018 - 11/12/2018)** (CAPPRM:ASME + MOVOL:380V , CAPPRM:MHLW + COOL:AIR + MOVOL:200V)	-
	1622 5099 04	1	DI CHANE CABLE (1400MM)	**(20/07/2017 - 20/08/2018)** (CAPPRM:ASME + MOVOL:380V , CAPPRM:MHLW + MOVOL:200V) + COOL:AIR **(21/08/2018 - 11/12/2018)** (CAPPRM:ASME + MOVOL:380V , CAPPRM:MHLW + COOL:AIR + MOVOL:200V)	-
	1649 8001 22	1	CUBICLE	**(20/07/2017 - 20/08/2018)** (CAPPRM:ASME + MOVOL:380V , CAPPRM:MHLW + MOVOL:200V) + COOL:AIR **(21/08/2018 - 11/12/2018)** (CAPPRM:ASME + MOVOL:380V , CAPPRM:MHLW + COOL:AIR + MOVOL:200V)	-
	• 1202 6584 02	AR	SEAL		-
	1649 8001 32	1	PLATE NEOS "D"	**(20/07/2017 - 20/08/2018)** (CAPPRM:ASME + MOVOL:380V , CAPPRM:MHLW + MOVOL:200V) + COOL:AIR **(21/08/2018 - 11/12/2018)** (CAPPRM:ASME + MOVOL:380V , CAPPRM:MHLW + COOL:AIR + MOVOL:200V)	-
	1649 8003 85	1	MOUNTING PLATE	**(20/07/2017 - 20/08/2018)** (CAPPRM:ASME + MOVOL:380V , CAPPRM:MHLW + MOVOL:200V) + COOL:AIR **(21/08/2018 - 11/12/2018)** (CAPPRM:ASME + MOVOL:380V , CAPPRM:MHLW + COOL:AIR + MOVOL:200V)	-
	1649 8002 39	1	WIRE HARNESS	**(20/07/2017 - 20/08/2018)** (CAPPRM:ASME + MOVOL:380V , CAPPRM:MHLW + MOVOL:200V) + COOL:AIR **(21/08/2018 - 11/12/2018)** (CAPPRM:ASME + MOVOL:380V , CAPPRM:MHLW + COOL:AIR + MOVOL:200V)	
	Electrical legend:	Pressure switch (vessel) + pressure sensor vessel + pressure sensor outlet			
	• 0698 5140 74	1	CABLE GLAND		
	1649 8002 40	1	WIRE HARNESS	**(20/07/2017 - 20/08/2018)** (CAPPRM:ASME + MOVOL:380V , CAPPRM:MHLW + MOVOL:200V) + COOL:AIR **(21/08/2018 - 11/12/2018)** (CAPPRM:ASME + MOVOL:380V , CAPPRM:MHLW + COOL:AIR + MOVOL:200V)	
	Electrical legend:	Temperature sensor element outlet + solenoids + ambient sensor			
	• 0698 5140 74	1	CABLE GLAND		
	1649 8002 72	1	CABLE POWER	**(20/07/2017 - 20/08/2018)** (CAPPRM:ASME + MOVOL:380V , CAPPRM:MHLW + MOVOL:200V) + COOL:AIR **(21/08/2018 - 11/12/2018)** (CAPPRM:ASME + MOVOL:380V , CAPPRM:MHLW + COOL:AIR + MOVOL:200V)	
	Electrical legend:	Full feature (FF) Drain			
	1649 8002 73	1	WIRE HARNESS	**(20/07/2017 - 20/08/2018)** (CAPPRM:ASME + MOVOL:380V , CAPPRM:MHLW + MOVOL:200V) + COOL:AIR **(21/08/2018 - 11/12/2018)** (CAPPRM:ASME + MOVOL:380V , CAPPRM:MHLW + COOL:AIR + MOVOL:200V)	
	Electrical legend:	Pack Drain + Air filter switch			

Legend:

CAPPRE:IEC - Component approval electrical:IEC
CAPPRM:ASME - Component approval mechanical:ASME
CAPPRM:MHLW - Component approval mechanical:MHLW
COOL:AIR - Cooling:Air cooled
FREQ:60HZ - Frequency:60 Hz
IDRY:Y - Integrated dryer:Yes
MODEL:GA75VP_16 - Model:GA 75VSD+
MOVOL:200V - Supply voltage:200 V
MOVOL:380V - Supply voltage:380 V

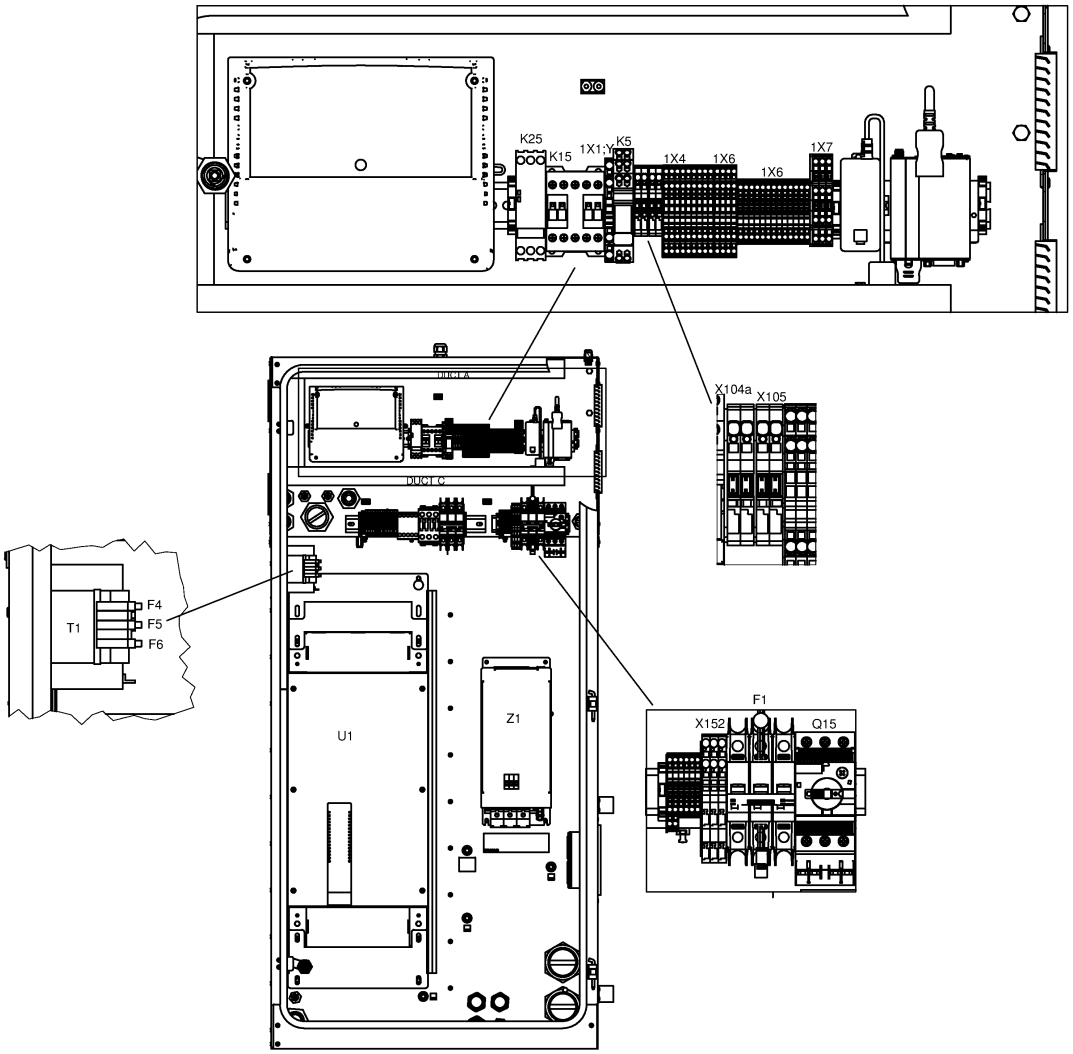
K25
K15
1X1:Y
K5
1X4
1X6
1X6
1X7
DUCT A
DUCT C
X104a
X105
T1
F4
F5
F6
U1
Z1
F1
X152
Q15

Ref	Part Number	Qty	Name	Validity	EL
	• 0698 5140 74	1	CABLE GLAND		
	1649 8002 75	1	WIRE HARNESS	**(20/07/2017 - 20/08/2018)** (CAPPRM:ASME + MOVOL:380V , CAPPRM:MHLW + MOVOL:200V) + COOL:AIR **(21/08/2018 - 11/12/2018)** (CAPPRM:ASME + MOVOL:380V , CAPPRM:MHLW + COOL:AIR + MOVOL:200V)	
	Electrical legend:	Relative Humidity sensor			
	• ~~1089 9320 09~~	1	RH SENSOR		
	Substituted by:	1089 9320 10 - TEMP. SENSOR (quantity: 1)			
	• 0698 5140 75	1	CABLE GLAND		
	1649 8001 45	3	MOTOR CABLE	**(20/07/2017 - 20/08/2018)** (CAPPRM:ASME + MOVOL:380V , CAPPRM:MHLW + MOVOL:200V) + COOL:AIR **(21/08/2018 - 11/12/2018)** (CAPPRM:ASME + MOVOL:380V , CAPPRM:MHLW + COOL:AIR + MOVOL:200V)	-
	1649 8001 48	1	MOTOR CABLE	**(20/07/2017 - 20/08/2018)** (CAPPRM:ASME + MOVOL:380V , CAPPRM:MHLW + MOVOL:200V) + COOL:AIR **(21/08/2018 - 11/12/2018)** (CAPPRM:ASME + MOVOL:380V , CAPPRM:MHLW + COOL:AIR + MOVOL:200V)	-
		1	DATA LABEL	**(02/02/2018 - 20/08/2018)** (CAPPRM:ASME + MOVOL:380V , CAPPRM:MHLW + MOVOL:200V) + COOL:AIR **(21/08/2018 - 11/12/2018)** (CAPPRM:ASME + MOVOL:380V , CAPPRM:MHLW + COOL:AIR + MOVOL:200V)	-
		1	DATA LABEL	**(20/07/2017 - 01/02/2018)** (CAPPRM:ASME + MOVOL:380V , CAPPRM:MHLW + MOVOL:200V) + COOL:AIR	-
	1079 9901 68	1	WARNING LABEL	**(20/07/2017 - 20/08/2018)** (CAPPRM:ASME + MOVOL:380V , CAPPRM:MHLW + MOVOL:200V) + COOL:AIR **(21/08/2018 - 11/12/2018)** (CAPPRM:ASME + MOVOL:380V , CAPPRM:MHLW + COOL:AIR + MOVOL:200V)	-
	1900 5350 15	1	INVERTER	**(20/07/2017 - 20/08/2018)** (CAPPRM:ASME + MOVOL:380V , CAPPRM:MHLW + MOVOL:200V) + COOL:AIR **(21/08/2018 - 11/12/2018)** (CAPPRM:ASME + MOVOL:380V , CAPPRM:MHLW + COOL:AIR + MOVOL:200V)	U1
	1631 2079 00	1	NANOPERMRING	**(20/07/2017 - 20/08/2018)** (CAPPRM:ASME + MOVOL:380V , CAPPRM:MHLW + MOVOL:200V) + COOL:AIR **(21/08/2018 - 11/12/2018)** (CAPPRM:ASME + MOVOL:380V , CAPPRM:MHLW + COOL:AIR + MOVOL:200V)	-
	0697 9811 17	2	PLUG	**(20/07/2017 - 20/08/2018)** (CAPPRM:ASME + MOVOL:380V , CAPPRM:MHLW + MOVOL:200V) + COOL:AIR **(21/08/2018 - 11/12/2018)** (CAPPRM:ASME + MOVOL:380V , CAPPRM:MHLW + COOL:AIR + MOVOL:200V)	
	Electrical legend:	Plug for transfo supply			
	0989 3700 48	2	NUT	**(20/07/2017 - 20/08/2018)** (CAPPRM:ASME + MOVOL:380V , CAPPRM:MHLW + MOVOL:200V) + COOL:AIR **(21/08/2018 - 11/12/2018)** (CAPPRM:ASME + MOVOL:380V , CAPPRM:MHLW + COOL:AIR + MOVOL:200V)	
	Electrical legend:	Nut for transfo supply			
	0698 5140 72	1	CABLE GLAND	**(20/07/2017 - 20/08/2018)** (CAPPRM:ASME + MOVOL:380V , CAPPRM:MHLW + MOVOL:200V) + COOL:AIR **(21/08/2018 - 11/12/2018)** (CAPPRM:ASME + MOVOL:380V , CAPPRM:MHLW + COOL:AIR + MOVOL:200V)	Fan

Legend:

CAPPRE:IEC - Component approval electrical:IEC
CAPPRM:ASME - Component approval mechanical:ASME
CAPPRM:MHLW - Component approval mechanical:MHLW
COOL:AIR - Cooling:Air cooled
FREQ:60HZ - Frequency:60 Hz
IDRY:Y - Integrated dryer:Yes
MODEL:GA75VP_16 - Model:GA 75VSD+
MOVOL:200V - Supply voltage:200 V
MOVOL:380V - Supply voltage:380 V

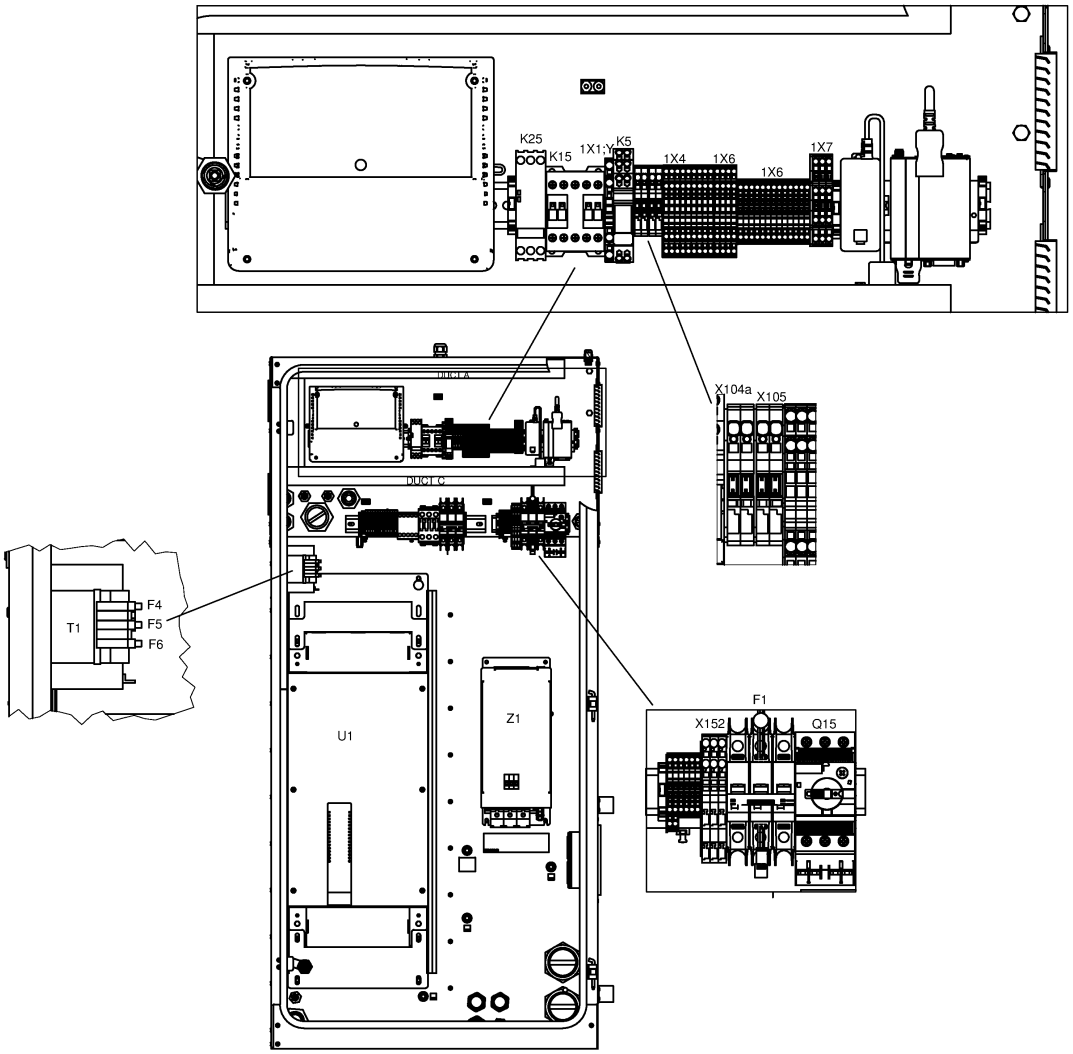
K25
K15
1X1:Y
K5
1X4
1X6
1X6
1X7
DUCT A
DUCT C
X104a
X105
T1
F4
F5
F6
U1
Z1
F1
X152
Q15

Ref	Part Number	Qty	Name	Validity	EL
	0698 5140 71	1	CABLE GLAND	**(20/07/2017 - 20/08/2018)** (CAPPRM:ASME + MOVOL:380V , CAPPRM:MHLW + MOVOL:200V) + COOL:AIR **(21/08/2018 - 11/12/2018)** (CAPPRM:ASME + MOVOL:380V , CAPPRM:MHLW + COOL:AIR + MOVOL:200V)	
	Electrical legend:	Ambient sensor			
	0697 9809 20	1	LOCKNUT	**(20/07/2017 - 20/08/2018)** (CAPPRM:ASME + MOVOL:380V , CAPPRM:MHLW + MOVOL:200V) + COOL:AIR **(21/08/2018 - 11/12/2018)** (CAPPRM:ASME + MOVOL:380V , CAPPRM:MHLW + COOL:AIR + MOVOL:200V)	
	Electrical legend:	Ambient sensor			
	1089 9556 44	1	FAN WITH FILTER	**(20/07/2017 - 20/08/2018)** (CAPPRM:ASME + MOVOL:380V , CAPPRM:MHLW + MOVOL:200V) + COOL:AIR **(21/08/2018 - 11/12/2018)** (CAPPRM:ASME + MOVOL:380V , CAPPRM:MHLW + COOL:AIR + MOVOL:200V)	Cubicle fan
		4	AIR INLET WITHOUT FILTER	**(20/07/2017 - 20/08/2018)** (CAPPRM:ASME + MOVOL:380V , CAPPRM:MHLW + MOVOL:200V) + COOL:AIR **(21/08/2018 - 11/12/2018)** (CAPPRM:ASME + MOVOL:380V , CAPPRM:MHLW + COOL:AIR + MOVOL:200V)	-
	Service kits:	2901 9901 01 - PREVENTIVE MAINTENANCE KIT - GA 75L VSD+ 2901 9900 95 - AIR FILTER KIT - GA 75L VSD+			
	1088 0032 09	1	CONNECTOR	**(20/07/2017 - 20/08/2018)** (CAPPRM:ASME + MOVOL:380V , CAPPRM:MHLW + MOVOL:200V) + COOL:AIR **(21/08/2018 - 11/12/2018)** (CAPPRM:ASME + MOVOL:380V , CAPPRM:MHLW + COOL:AIR + MOVOL:200V)	X3
	1089 9572 05	1	LINE FILTER	**(20/07/2017 - 20/08/2018)** (CAPPRM:ASME + MOVOL:380V , CAPPRM:MHLW + MOVOL:200V) + COOL:AIR **(21/08/2018 - 11/12/2018)** (CAPPRM:ASME + MOVOL:380V , CAPPRM:MHLW + COOL:AIR + MOVOL:200V)	Z1 for 75 kw
	Electrical legend:	Z1 for 75 kw			
	1089 9562 04	1	STRAP	**(20/07/2017 - 20/08/2018)** (CAPPRM:ASME + MOVOL:380V , CAPPRM:MHLW + MOVOL:200V) + COOL:AIR **(21/08/2018 - 11/12/2018)** (CAPPRM:ASME + MOVOL:380V , CAPPRM:MHLW + COOL:AIR + MOVOL:200V)	HF-screen
	1089 9514 56	1	TRANSFORMER	**(20/07/2017 - 20/08/2018)** (CAPPRM:ASME + MOVOL:380V , CAPPRM:MHLW + MOVOL:200V) + COOL:AIR **(21/08/2018 - 11/12/2018)** (CAPPRM:ASME + MOVOL:380V , CAPPRM:MHLW + COOL:AIR + MOVOL:200V)	T1
	1089 9522 26	1	CIRCUIT BREAKER	**(20/07/2017 - 20/08/2018)** (CAPPRM:ASME + MOVOL:380V , CAPPRM:MHLW + MOVOL:200V) + COOL:AIR **(21/08/2018 - 11/12/2018)** (CAPPRM:ASME + MOVOL:380V , CAPPRM:MHLW + COOL:AIR + MOVOL:200V)	F1
	1089 9513 41	1	PUSH BUTTON	**(20/07/2017 - 20/08/2018)** (CAPPRM:ASME + MOVOL:380V , CAPPRM:MHLW + MOVOL:200V) + COOL:AIR **(21/08/2018 - 11/12/2018)** (CAPPRM:ASME + MOVOL:380V , CAPPRM:MHLW + COOL:AIR + MOVOL:200V)	S3
	1089 9513 28	1	HOLDER	**(20/07/2017 - 20/08/2018)** (CAPPRM:ASME + MOVOL:380V , CAPPRM:MHLW + MOVOL:200V) + COOL:AIR **(21/08/2018 - 11/12/2018)** (CAPPRM:ASME + MOVOL:380V , CAPPRM:MHLW + COOL:AIR + MOVOL:200V)	S3

Legend:

CAPPRE:IEC - Component approval electrical:IEC
CAPPRM:ASME - Component approval mechanical:ASME
CAPPRM:MHLW - Component approval mechanical:MHLW
COOL:AIR - Cooling:Air cooled
FREQ:60HZ - Frequency:60 Hz
IDRY:Y - Integrated dryer:Yes
MODEL:GA75VP_16 - Model:GA 75VSD+
MOVOL:200V - Supply voltage:200 V
MOVOL:380V - Supply voltage:380 V

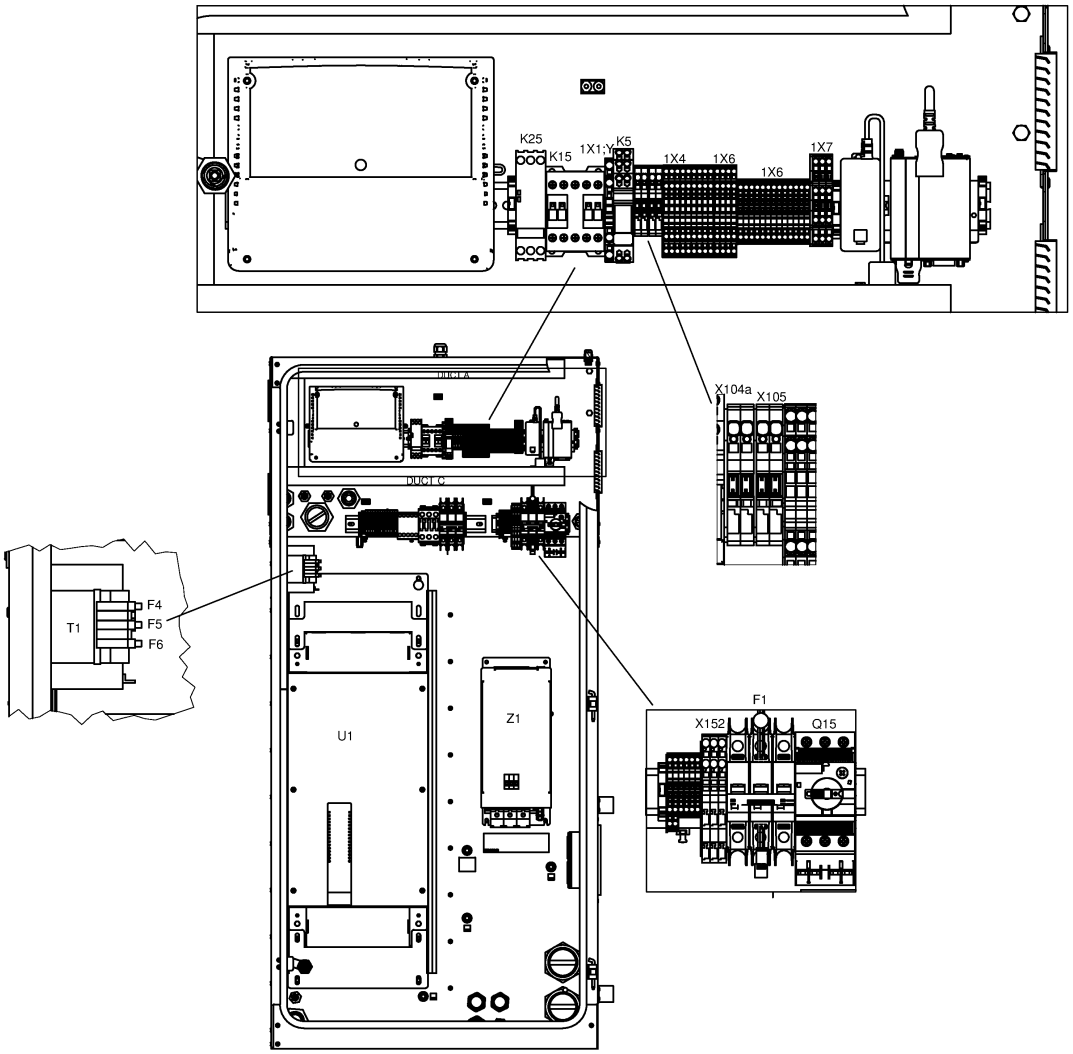
K25
K15
1X1:Y
K5
1X4
1X6
1X6
1X7
DUCT A
DUCT C
X104a
X105
T1
F4
F5
F6
U1
Z1
F1
X152
Q15

Ref	Part Number	Qty	Name	Validity	EL
	~~1089 9513 30~~	4	CONTACTOR	**(20/07/2017 - 20/08/2018)** (CAPPRM:ASME + MOVOL:380V , CAPPRM:MHLW + MOVOL:200V) + COOL:AIR **(21/08/2018 - 11/12/2018)** (CAPPRM:ASME + MOVOL:380V , CAPPRM:MHLW + COOL:AIR + MOVOL:200V)	S3
	Substituted by:	1089 9513 04 - CONTACT BLOCK (quantity: 1)			
	1088 0031 02	1	CONNECTOR 2-POLE	**(20/07/2017 - 20/08/2018)** (CAPPRM:ASME + MOVOL:380V , CAPPRM:MHLW + MOVOL:200V) + COOL:AIR **(21/08/2018 - 11/12/2018)** (CAPPRM:ASME + MOVOL:380V , CAPPRM:MHLW + COOL:AIR + MOVOL:200V)	
	Electrical legend:	X153 (Smartbox)			
	1088 0039 07	3	TERMINAL	**(20/07/2017 - 20/08/2018)** (CAPPRM:ASME + MOVOL:380V , CAPPRM:MHLW + MOVOL:200V) + COOL:AIR **(21/08/2018 - 11/12/2018)** (CAPPRM:ASME + MOVOL:380V , CAPPRM:MHLW + COOL:AIR + MOVOL:200V)	X152
	1088 0039 05	1	PLATE	**(20/07/2017 - 20/08/2018)** (CAPPRM:ASME + MOVOL:380V , CAPPRM:MHLW + MOVOL:200V) + COOL:AIR **(21/08/2018 - 11/12/2018)** (CAPPRM:ASME + MOVOL:380V , CAPPRM:MHLW + COOL:AIR + MOVOL:200V)	X152
	1088 0039 26	1	CONNECTOR	**(20/07/2017 - 20/08/2018)** (CAPPRM:ASME + MOVOL:380V , CAPPRM:MHLW + MOVOL:200V) + COOL:AIR **(21/08/2018 - 11/12/2018)** (CAPPRM:ASME + MOVOL:380V , CAPPRM:MHLW + COOL:AIR + MOVOL:200V)	
	Electrical legend:	X152 (remove coding pin 1,3)			
	1088 0037 99	4	PIN	**(20/07/2017 - 20/08/2018)** (CAPPRM:ASME + MOVOL:380V , CAPPRM:MHLW + MOVOL:200V) + COOL:AIR **(21/08/2018 - 11/12/2018)** (CAPPRM:ASME + MOVOL:380V , CAPPRM:MHLW + COOL:AIR + MOVOL:200V)	X152:1; 3
	~~1088 0031 81~~	7	END STOP BRACKET 6MM	**(20/07/2017 - 20/08/2018)** (CAPPRM:ASME + MOVOL:380V , CAPPRM:MHLW + MOVOL:200V) + COOL:AIR **(21/08/2018 - 11/12/2018)** (CAPPRM:ASME + MOVOL:380V , CAPPRM:MHLW + COOL:AIR + MOVOL:200V)	
	Electrical legend:	Connector/terminal rail			
	Substituted by:	1089 0577 82 - END RETAINER (quantity: 1)			
	1088 0039 38	2	TERMINAL	**(20/07/2017 - 20/08/2018)** (CAPPRM:ASME + MOVOL:380V , CAPPRM:MHLW + MOVOL:200V) + COOL:AIR **(21/08/2018 - 11/12/2018)** (CAPPRM:ASME + MOVOL:380V , CAPPRM:MHLW + COOL:AIR + MOVOL:200V)	1X11:2,5
	1088 0039 40	1	PLATE	**(20/07/2017 - 20/08/2018)** (CAPPRM:ASME + MOVOL:380V , CAPPRM:MHLW + MOVOL:200V) + COOL:AIR **(21/08/2018 - 11/12/2018)** (CAPPRM:ASME + MOVOL:380V , CAPPRM:MHLW + COOL:AIR + MOVOL:200V)	1X11
	1088 0039 34	4	TERMINAL	**(20/07/2017 - 20/08/2018)** (CAPPRM:ASME + MOVOL:380V , CAPPRM:MHLW + MOVOL:200V) + COOL:AIR **(21/08/2018 - 11/12/2018)** (CAPPRM:ASME + MOVOL:380V , CAPPRM:MHLW + COOL:AIR + MOVOL:200V)	
	Electrical legend:	1X11:30,301,34			
	1088 0039 35	1	PLATE	**(20/07/2017 - 20/08/2018)** (CAPPRM:ASME + MOVOL:380V , CAPPRM:MHLW + MOVOL:200V) + COOL:AIR **(21/08/2018 - 11/12/2018)** (CAPPRM:ASME + MOVOL:380V , CAPPRM:MHLW + COOL:AIR + MOVOL:200V)	1X11

Legend:

CAPPRE:IEC - Component approval electrical:IEC
COOL:AIR - Cooling:Air cooled
MODEL:GA75VP_16 - Model:GA 75VSD+
CAPPRM:ASME - Component approval mechanical:ASME
FREQ:60HZ - Frequency:60 Hz
MOVOL:200V - Supply voltage:200 V
CAPPRM:MHLW - Component approval mechanical:MHLW
IDRY:Y - Integrated dryer:Yes
MOVOL:380V - Supply voltage:380 V

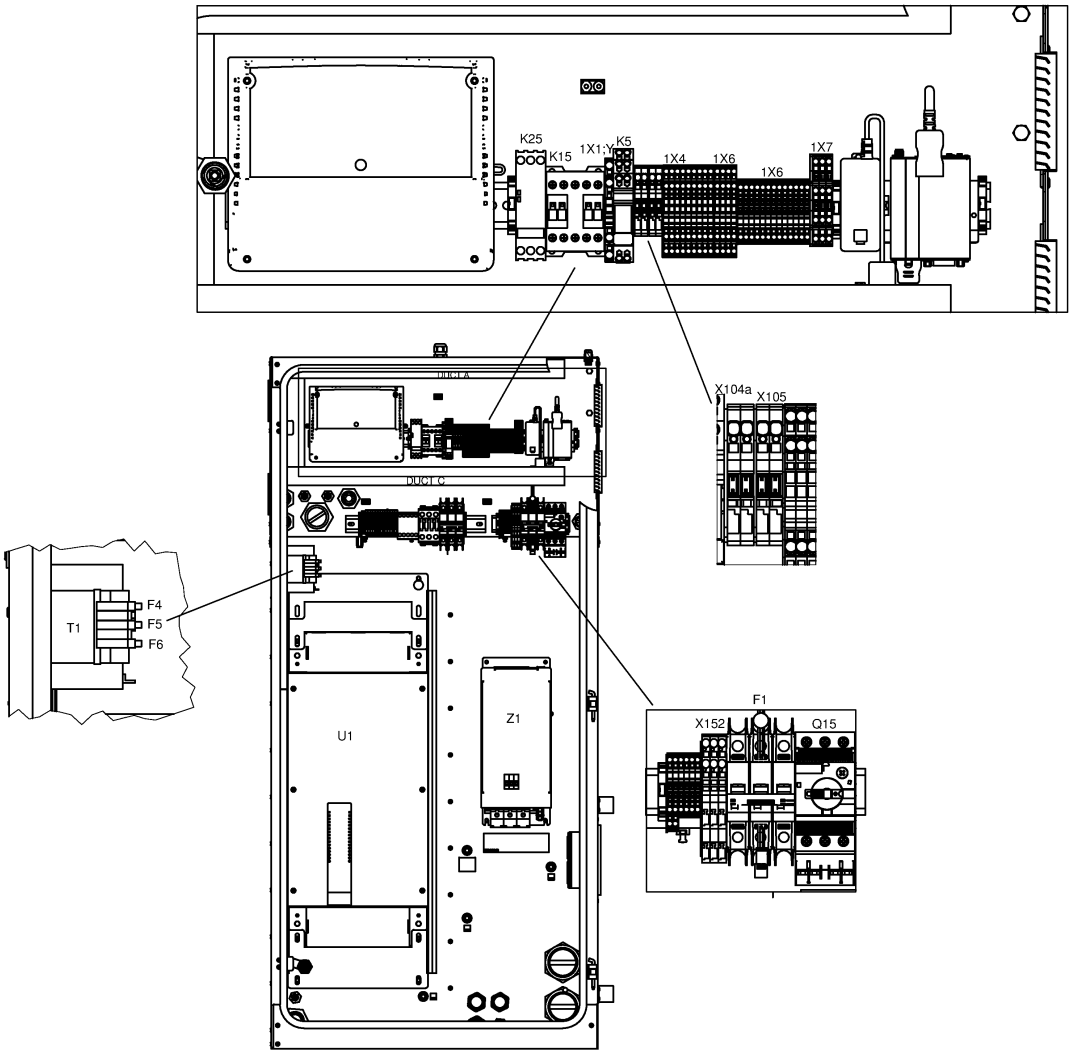
K25
K15
1X1:Y
K5
1X4
1X6
1X6
1X7
DUCT A
DUCT C
X104a
X105
T1
F4
F5
F6
U1
Z1
F1
X152
Q15

Ref	Part Number	Qty	Name	Validity	EL
	1088 0039 04	2	TERMINAL	**(20/07/2017 - 20/08/2018)** (CAPPRM:ASME + MOVOL:380V , CAPPRM:MHLW + MOVOL:200V) + COOL:AIR **(21/08/2018 - 11/12/2018)** (CAPPRM:ASME + MOVOL:380V , CAPPRM:MHLW + COOL:AIR + MOVOL:200V)	X104a
	1088 0037 99	2	PIN	**(20/07/2017 - 20/08/2018)** (CAPPRM:ASME + MOVOL:380V , CAPPRM:MHLW + MOVOL:200V) + COOL:AIR **(21/08/2018 - 11/12/2018)** (CAPPRM:ASME + MOVOL:380V , CAPPRM:MHLW + COOL:AIR + MOVOL:200V)	X104a/X105
	1088 0039 02	1	PLATE	**(20/07/2017 - 20/08/2018)** (CAPPRM:ASME + MOVOL:380V , CAPPRM:MHLW + MOVOL:200V) + COOL:AIR **(21/08/2018 - 11/12/2018)** (CAPPRM:ASME + MOVOL:380V , CAPPRM:MHLW + COOL:AIR + MOVOL:200V)	X104a
	1088 0039 04	2	TERMINAL	**(20/07/2017 - 20/08/2018)** (CAPPRM:ASME + MOVOL:380V , CAPPRM:MHLW + MOVOL:200V) + COOL:AIR **(21/08/2018 - 11/12/2018)** (CAPPRM:ASME + MOVOL:380V , CAPPRM:MHLW + COOL:AIR + MOVOL:200V)	
	1088 0039 02	1	PLATE	**(20/07/2017 - 20/08/2018)** (CAPPRM:ASME + MOVOL:380V , CAPPRM:MHLW + MOVOL:200V) + COOL:AIR **(21/08/2018 - 11/12/2018)** (CAPPRM:ASME + MOVOL:380V , CAPPRM:MHLW + COOL:AIR + MOVOL:200V)	
	1088 0039 34	13	TERMINAL	**(20/07/2017 - 20/08/2018)** (CAPPRM:ASME + MOVOL:380V , CAPPRM:MHLW + MOVOL:200V) + COOL:AIR **(21/08/2018 - 11/12/2018)** (CAPPRM:ASME + MOVOL:380V , CAPPRM:MHLW + COOL:AIR + MOVOL:200V)	1X6
	1088 0037 69	3	CONNECTOR	**(20/07/2017 - 20/08/2018)** (CAPPRM:ASME + MOVOL:380V , CAPPRM:MHLW + MOVOL:200V) + COOL:AIR **(21/08/2018 - 11/12/2018)** (CAPPRM:ASME + MOVOL:380V , CAPPRM:MHLW + COOL:AIR + MOVOL:200V)	1X7
	1088 0039 35	1	PLATE	**(20/07/2017 - 20/08/2018)** (CAPPRM:ASME + MOVOL:380V , CAPPRM:MHLW + MOVOL:200V) + COOL:AIR **(21/08/2018 - 11/12/2018)** (CAPPRM:ASME + MOVOL:380V , CAPPRM:MHLW + COOL:AIR + MOVOL:200V)	1X6
	1088 0040 37	1	END PLATE	**(20/07/2017 - 20/08/2018)** (CAPPRM:ASME + MOVOL:380V , CAPPRM:MHLW + MOVOL:200V) + COOL:AIR **(21/08/2018 - 11/12/2018)** (CAPPRM:ASME + MOVOL:380V , CAPPRM:MHLW + COOL:AIR + MOVOL:200V)	1X7
	1088 0039 36	9	TERMINAL	**(20/07/2017 - 20/08/2018)** (CAPPRM:ASME + MOVOL:380V , CAPPRM:MHLW + MOVOL:200V) + COOL:AIR **(21/08/2018 - 11/12/2018)** (CAPPRM:ASME + MOVOL:380V , CAPPRM:MHLW + COOL:AIR + MOVOL:200V)	1X4
	1088 0039 36	4	TERMINAL	**(20/07/2017 - 20/08/2018)** (CAPPRM:ASME + MOVOL:380V , CAPPRM:MHLW + MOVOL:200V) + COOL:AIR **(21/08/2018 - 11/12/2018)** (CAPPRM:ASME + MOVOL:380V , CAPPRM:MHLW + COOL:AIR + MOVOL:200V)	1X6
	1088 0039 37	1	END PLATE	**(20/07/2017 - 20/08/2018)** (CAPPRM:ASME + MOVOL:380V , CAPPRM:MHLW + MOVOL:200V) + COOL:AIR **(21/08/2018 - 11/12/2018)** (CAPPRM:ASME + MOVOL:380V , CAPPRM:MHLW + COOL:AIR + MOVOL:200V)	1X4

Legend:

CAPPRE:IEC - Component approval electrical:IEC
CAPPRM:ASME - Component approval mechanical:ASME
CAPPRM:MHLW - Component approval mechanical:MHLW
COOL:AIR - Cooling:Air cooled
FREQ:60HZ - Frequency:60 Hz
IDRY:Y - Integrated dryer:Yes
MODEL:GA75VP_16 - Model:GA 75VSD+
MOVOL:200V - Supply voltage:200 V
MOVOL:380V - Supply voltage:380 V

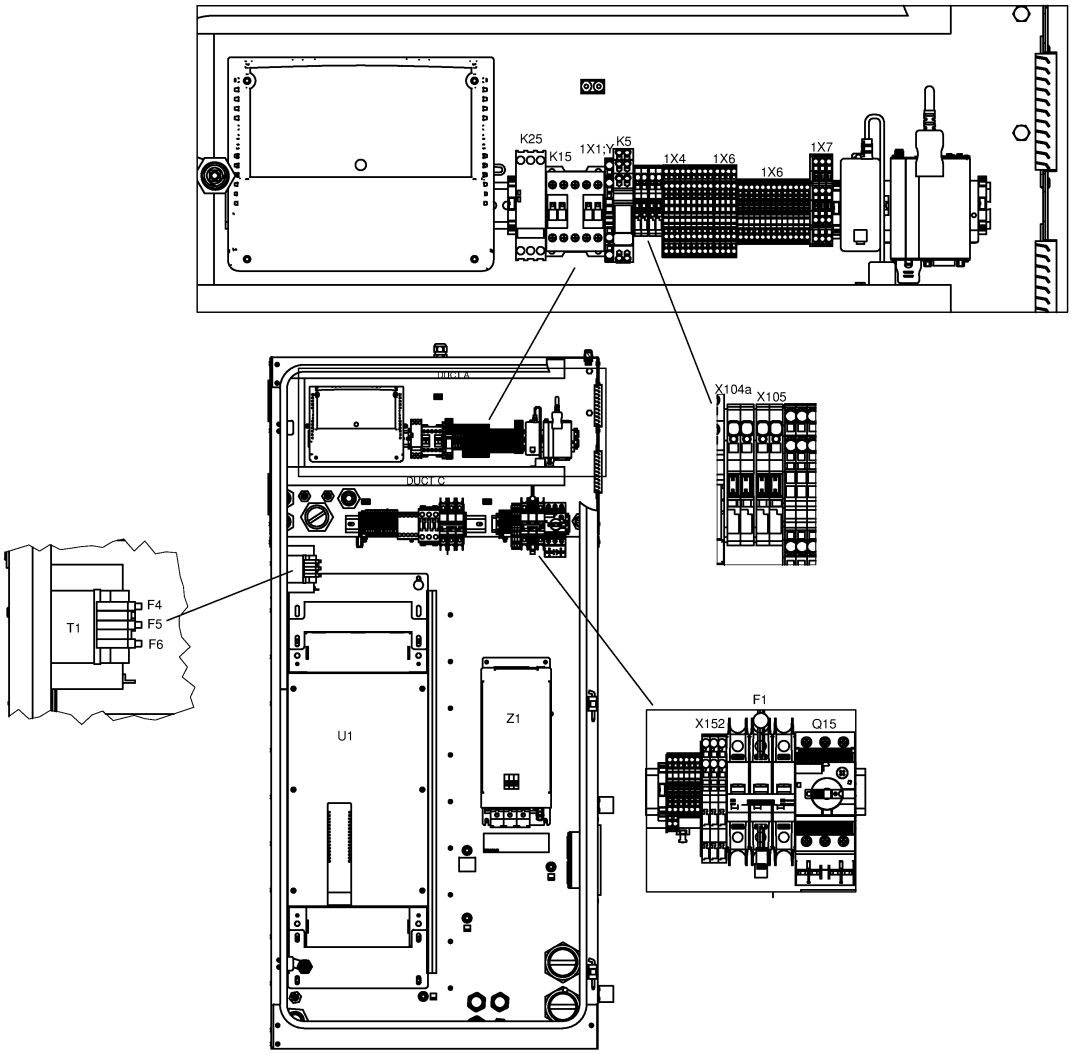
K25
K15
1X1:Y
K5
1X4
1X6
1X6
1X7
DUCT A
DUCT C
X104a
X105
T1
F4
F5
F6
U1
Z1
F1
X152
Q15

Ref	Part Number	Qty	Name	Validity	EL
	1088 0039 37	1	END PLATE	**(20/07/2017 - 20/08/2018)** (CAPPRM:ASME + MOVOL:380V , CAPPRM:MHLW + MOVOL:200V) + COOL:AIR **(21/08/2018 - 11/12/2018)** (CAPPRM:ASME + MOVOL:380V , CAPPRM:MHLW + COOL:AIR + MOVOL:200V)	1X6
	1088 0039 37	1	END PLATE	**(20/07/2017 - 20/08/2018)** (CAPPRM:ASME + MOVOL:380V , CAPPRM:MHLW + MOVOL:200V) + COOL:AIR **(21/08/2018 - 11/12/2018)** (CAPPRM:ASME + MOVOL:380V , CAPPRM:MHLW + COOL:AIR + MOVOL:200V)	1X1:Y/D
	1088 0037 81	1	CONNECTOR	**(20/07/2017 - 20/08/2018)** (CAPPRM:ASME + MOVOL:380V , CAPPRM:MHLW + MOVOL:200V) + COOL:AIR **(21/08/2018 - 11/12/2018)** (CAPPRM:ASME + MOVOL:380V , CAPPRM:MHLW + COOL:AIR + MOVOL:200V)	2X27
	1088 0037 80	1	CONNECTOR	**(20/07/2017 - 20/08/2018)** (CAPPRM:ASME + MOVOL:380V , CAPPRM:MHLW + MOVOL:200V) + COOL:AIR **(21/08/2018 - 11/12/2018)** (CAPPRM:ASME + MOVOL:380V , CAPPRM:MHLW + COOL:AIR + MOVOL:200V)	2X28
	1088 0031 32	1	CONNECTOR	**(20/07/2017 - 20/08/2018)** (CAPPRM:ASME + MOVOL:380V , CAPPRM:MHLW + MOVOL:200V) + COOL:AIR **(21/08/2018 - 11/12/2018)** (CAPPRM:ASME + MOVOL:380V , CAPPRM:MHLW + COOL:AIR + MOVOL:200V)	2X30
	1088 0031 26	1	CONNECTOR 6-POLE	**(20/07/2017 - 20/08/2018)** (CAPPRM:ASME + MOVOL:380V , CAPPRM:MHLW + MOVOL:200V) + COOL:AIR **(21/08/2018 - 11/12/2018)** (CAPPRM:ASME + MOVOL:380V , CAPPRM:MHLW + COOL:AIR + MOVOL:200V)	2X31
	~~1089 9664 06~~	1	SWITCH	**(20/07/2017 - 20/08/2018)** (CAPPRM:ASME + MOVOL:380V , CAPPRM:MHLW + MOVOL:200V) + COOL:AIR **(21/08/2018 - 11/12/2018)** (CAPPRM:ASME + MOVOL:380V , CAPPRM:MHLW + COOL:AIR + MOVOL:200V)	Q15
	Substituted by:	1089 9551 97 - AUX.CONTACT CIRCUIT BREAKER (quantity: 1)			
	1089 9551 18	1	CIRCUIT BREAKER	**(20/07/2017 - 20/08/2018)** (CAPPRM:ASME + MOVOL:380V , CAPPRM:MHLW + MOVOL:200V) + COOL:AIR **(21/08/2018 - 11/12/2018)** (CAPPRM:ASME + MOVOL:380V , CAPPRM:MHLW + COOL:AIR + MOVOL:200V)	Q15
	1088 0038 26	1	TERMINAL	**(20/07/2017 - 20/08/2018)** (CAPPRM:ASME + MOVOL:380V , CAPPRM:MHLW + MOVOL:200V) + COOL:AIR **(21/08/2018 - 11/12/2018)** (CAPPRM:ASME + MOVOL:380V , CAPPRM:MHLW + COOL:AIR + MOVOL:200V)	1X1:Y/D
	1089 9602 79	1	CONTACTOR 110 V	**(20/07/2017 - 20/08/2018)** (CAPPRM:ASME + MOVOL:380V , CAPPRM:MHLW + MOVOL:200V) + COOL:AIR **(21/08/2018 - 11/12/2018)** (CAPPRM:ASME + MOVOL:380V , CAPPRM:MHLW + COOL:AIR + MOVOL:200V)	K15
	1089 9461 26	1	PHASE SEQUENCE RELAY	**(20/07/2017 - 20/08/2018)** (CAPPRM:ASME + MOVOL:380V , CAPPRM:MHLW + MOVOL:200V) + COOL:AIR **(21/08/2018 - 11/12/2018)** (CAPPRM:ASME + MOVOL:380V , CAPPRM:MHLW + COOL:AIR + MOVOL:200V)	K25
	1088 0032 17	1	RELAY 115 VAC	**(20/07/2017 - 20/08/2018)** (CAPPRM:ASME + MOVOL:380V , CAPPRM:MHLW + MOVOL:200V) + COOL:AIR **(21/08/2018 - 11/12/2018)** (CAPPRM:ASME + MOVOL:380V , CAPPRM:MHLW + COOL:AIR + MOVOL:200V)	K5

Legend:

CAPPRE:IEC - Component approval electrical:IEC
CAPPRM:ASME - Component approval mechanical:ASME
CAPPRM:MHLW - Component approval mechanical:MHLW
COOL:AIR - Cooling:Air cooled
FREQ:60HZ - Frequency:60 Hz
IDRY:Y - Integrated dryer:Yes
MODEL:GA75VP_16 - Model:GA 75VSD+
MOVOL:200V - Supply voltage:200 V
MOVOL:380V - Supply voltage:380 V

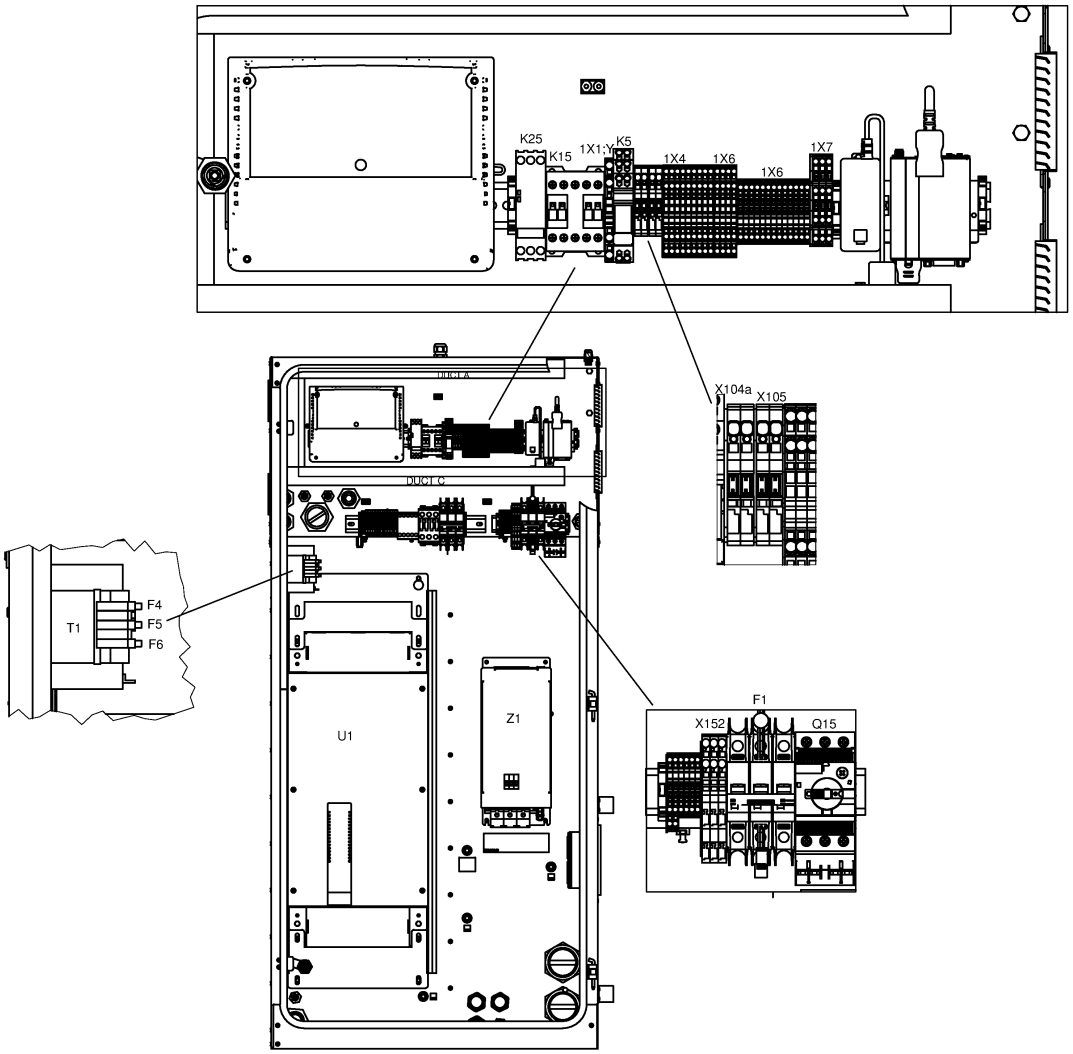
K25
K15
1X1:Y
K5
1X4
1X6
1X6
1X7
DUCT A
DUCT C
X104a
X105
T1
F4
F5
F6
U1
Z1
F1
X152
Q15

Ref	Part Number	Qty	Name	Validity	EL
	0991 8011 21	AR	CABLE TRAY	**(20/07/2017 - 20/08/2018)** (CAPPRM:ASME + MOVOL:380V , CAPPRM:MHLW + MOVOL:200V) + COOL:AIR **(21/08/2018 - 11/12/2018)** (CAPPRM:ASME + MOVOL:380V , CAPPRM:MHLW + COOL:AIR + MOVOL:200V)	L=1384mm
	1900 2203 02	1	DRYER RAIL	**(20/07/2017 - 20/08/2018)** (CAPPRM:ASME + MOVOL:380V , CAPPRM:MHLW + MOVOL:200V) + COOL:AIR **(21/08/2018 - 11/12/2018)** (CAPPRM:ASME + MOVOL:380V , CAPPRM:MHLW + COOL:AIR + MOVOL:200V)	
	Electrical legend:	Without trafo on dryer			
	1088 0031 13	1	CONNECTOR 13-POLE	**(20/07/2017 - 20/08/2018)** (CAPPRM:ASME + MOVOL:380V , CAPPRM:MHLW + MOVOL:200V) + COOL:AIR **(21/08/2018 - 11/12/2018)** (CAPPRM:ASME + MOVOL:380V , CAPPRM:MHLW + COOL:AIR + MOVOL:200V)	1X30
	1088 0037 82	1	CONNECTOR	**(20/07/2017 - 20/08/2018)** (CAPPRM:ASME + MOVOL:380V , CAPPRM:MHLW + MOVOL:200V) + COOL:AIR **(21/08/2018 - 11/12/2018)** (CAPPRM:ASME + MOVOL:380V , CAPPRM:MHLW + COOL:AIR + MOVOL:200V)	3X34
	0697 9811 13	1	PLUG	**(20/07/2017 - 20/08/2018)** (CAPPRM:ASME + MOVOL:380V , CAPPRM:MHLW + MOVOL:200V) + COOL:AIR **(21/08/2018 - 11/12/2018)** (CAPPRM:ASME + MOVOL:380V , CAPPRM:MHLW + COOL:AIR + MOVOL:200V)	
	Electrical legend:	Energy recovery			
	0989 3700 44	1	LOCKNUT	**(20/07/2017 - 20/08/2018)** (CAPPRM:ASME + MOVOL:380V , CAPPRM:MHLW + MOVOL:200V) + COOL:AIR **(21/08/2018 - 11/12/2018)** (CAPPRM:ASME + MOVOL:380V , CAPPRM:MHLW + COOL:AIR + MOVOL:200V)	
	Electrical legend:	Energy recovery			
	0697 9811 12	1	PLUG	**(20/07/2017 - 20/08/2018)** (CAPPRM:ASME + MOVOL:380V , CAPPRM:MHLW + MOVOL:200V) + COOL:AIR **(21/08/2018 - 11/12/2018)** (CAPPRM:ASME + MOVOL:380V , CAPPRM:MHLW + COOL:AIR + MOVOL:200V)	
	Electrical legend:	Control circuit of T10			
	0989 3700 43	1	NUT	**(20/07/2017 - 20/08/2018)** (CAPPRM:ASME + MOVOL:380V , CAPPRM:MHLW + MOVOL:200V) + COOL:AIR **(21/08/2018 - 11/12/2018)** (CAPPRM:ASME + MOVOL:380V , CAPPRM:MHLW + COOL:AIR + MOVOL:200V)	
	Electrical legend:	Control circuit of T10			

Legend:

CAPPRE:IEC - Component approval electrical:IEC
CAPPRM:ASME - Component approval mechanical:ASME
CAPPRM:MHLW - Component approval mechanical:MHLW
COOL:AIR - Cooling:Air cooled
FREQ:60HZ - Frequency:60 Hz
IDRY:Y - Integrated dryer:Yes
MODEL:GA75VP_16 - Model:GA 75VSD+
MOVOL:200V - Supply voltage:200 V
MOVOL:380V - Supply voltage:380 V

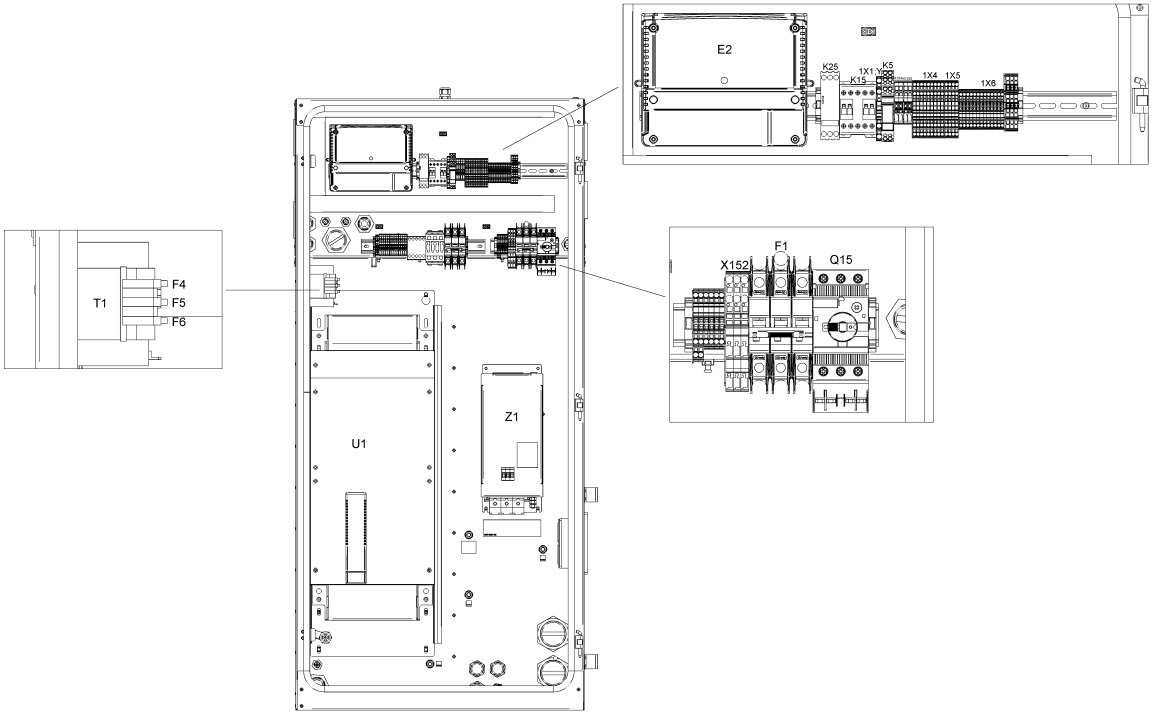
E2
K25
K15
1X1
K5
1X4
1X5
1X6
T1
F4
F5
F6
F1
X152
Q15
U1
Z1

21.12 - Cubicle components GA 75L VSD+ - 200V-380V/60Hz - IEC - Full-Feature (12/12/2018 - 27/11/2019)

(MOVOL:200V , MOVOL:380V) + CAPPRE:IEC + FREQ:60HZ + IDRY:Y + MODEL:GA75VP_16

Ref	Part Number	Qty	Name	Validity	EL
	1900 2202 23	1	CUBICLE	**(12/12/2018 - 27/11/2019)**	
	9820 3000 31	1	ASSEMBLY DRAWING	**(12/12/2018 - 24/02/2019)** (CAPPRM:ASME + MOVOL:380V , CAPPRM:MHLW + COOL:AIR + MOVOL:200V) **(25/02/2019 - 27/11/2019)** (CAPPRM:ASME + MOVOL:380V , CAPPRM:MHLW + MOVOL:200V) + COOL:AIR	AD
	9820 3000 27	1	SERVICE DIAGRAM	**(12/12/2018 - 24/02/2019)** (CAPPRM:ASME + MOVOL:380V , CAPPRM:MHLW + COOL:AIR + MOVOL:200V) **(25/02/2019 - 27/11/2019)** (CAPPRM:ASME + MOVOL:380V , CAPPRM:MHLW + MOVOL:200V) + COOL:AIR	SD
	1622 3798 72	1	WIRE HARNESS	**(12/12/2018 - 24/02/2019)** (CAPPRM:ASME + MOVOL:380V , CAPPRM:MHLW + COOL:AIR + MOVOL:200V) **(25/02/2019 - 27/11/2019)** (CAPPRM:ASME + MOVOL:380V , CAPPRM:MHLW + MOVOL:200V) + COOL:AIR	Comm Cable
	1622 5099 04	1	DI CHANE CABLE (1400MM)	**(12/12/2018 - 24/02/2019)** (CAPPRM:ASME + MOVOL:380V , CAPPRM:MHLW + COOL:AIR + MOVOL:200V) **(25/02/2019 - 27/11/2019)** (CAPPRM:ASME + MOVOL:380V , CAPPRM:MHLW + MOVOL:200V) + COOL:AIR	
	Electrical legend:	Comm Cable Loose supply			
	1649 8001 22	1	CUBICLE	**(12/12/2018 - 24/02/2019)** (CAPPRM:ASME + MOVOL:380V , CAPPRM:MHLW + COOL:AIR + MOVOL:200V) **(25/02/2019 - 27/11/2019)** (CAPPRM:ASME + MOVOL:380V , CAPPRM:MHLW + MOVOL:200V) + COOL:AIR	MSA
	1649 8001 32	1	PLATE NEOS "D"	**(12/12/2018 - 24/02/2019)** (CAPPRM:ASME + MOVOL:380V , CAPPRM:MHLW + COOL:AIR + MOVOL:200V) **(25/02/2019 - 27/11/2019)** (CAPPRM:ASME + MOVOL:380V , CAPPRM:MHLW + MOVOL:200V) + COOL:AIR	
	Electrical legend:	Mounting plate			
	1649 8003 85	1	MOUNTING PLATE	**(12/12/2018 - 24/02/2019)** (CAPPRM:ASME + MOVOL:380V , CAPPRM:MHLW + COOL:AIR + MOVOL:200V) **(25/02/2019 - 27/11/2019)** (CAPPRM:ASME + MOVOL:380V , CAPPRM:MHLW + MOVOL:200V) + COOL:AIR	
	Electrical legend:	Mounting plate			
	1649 8002 39	1	WIRE HARNESS	**(12/12/2018 - 24/02/2019)** (CAPPRM:ASME + MOVOL:380V , CAPPRM:MHLW + COOL:AIR + MOVOL:200V) **(25/02/2019 - 27/11/2019)** (CAPPRM:ASME + MOVOL:380V , CAPPRM:MHLW + MOVOL:200V) + COOL:AIR	WH
	1649 8002 40	1	WIRE HARNESS	**(12/12/2018 - 24/02/2019)** (CAPPRM:ASME + MOVOL:380V , CAPPRM:MHLW + COOL:AIR + MOVOL:200V) **(25/02/2019 - 27/11/2019)** (CAPPRM:ASME + MOVOL:380V , CAPPRM:MHLW + MOVOL:200V) + COOL:AIR	WH
	1649 8002 72	1	CABLE POWER	**(12/12/2018 - 24/02/2019)** (CAPPRM:ASME + MOVOL:380V , CAPPRM:MHLW + COOL:AIR + MOVOL:200V) **(25/02/2019 - 27/11/2019)** (CAPPRM:ASME + MOVOL:380V , CAPPRM:MHLW + MOVOL:200V) + COOL:AIR	
	Electrical legend:	Full feature (FF) Drain			
	1649 8002 73	1	WIRE HARNESS	**(12/12/2018 - 24/02/2019)** (CAPPRM:ASME + MOVOL:380V , CAPPRM:MHLW + COOL:AIR + MOVOL:200V) **(25/02/2019 - 27/11/2019)** (CAPPRM:ASME + MOVOL:380V , CAPPRM:MHLW + MOVOL:200V) + COOL:AIR	
	Electrical legend:	Pack Drain + Air filter switch			

Legend:

CAPPRE:IEC - Component approval electrical:IEC
CAPPRM:ASME - Component approval mechanical:ASME
CAPPRM:MHLW - Component approval mechanical:MHLW
COOL:AIR - Cooling:Air cooled
FREQ:60HZ - Frequency:60 Hz
IDRY:Y - Integrated dryer:Yes
MODEL:GA75VP_16 - Model:GA 75VSD+
MOVOL:200V - Supply voltage:200 V
MOVOL:380V - Supply voltage:380 V

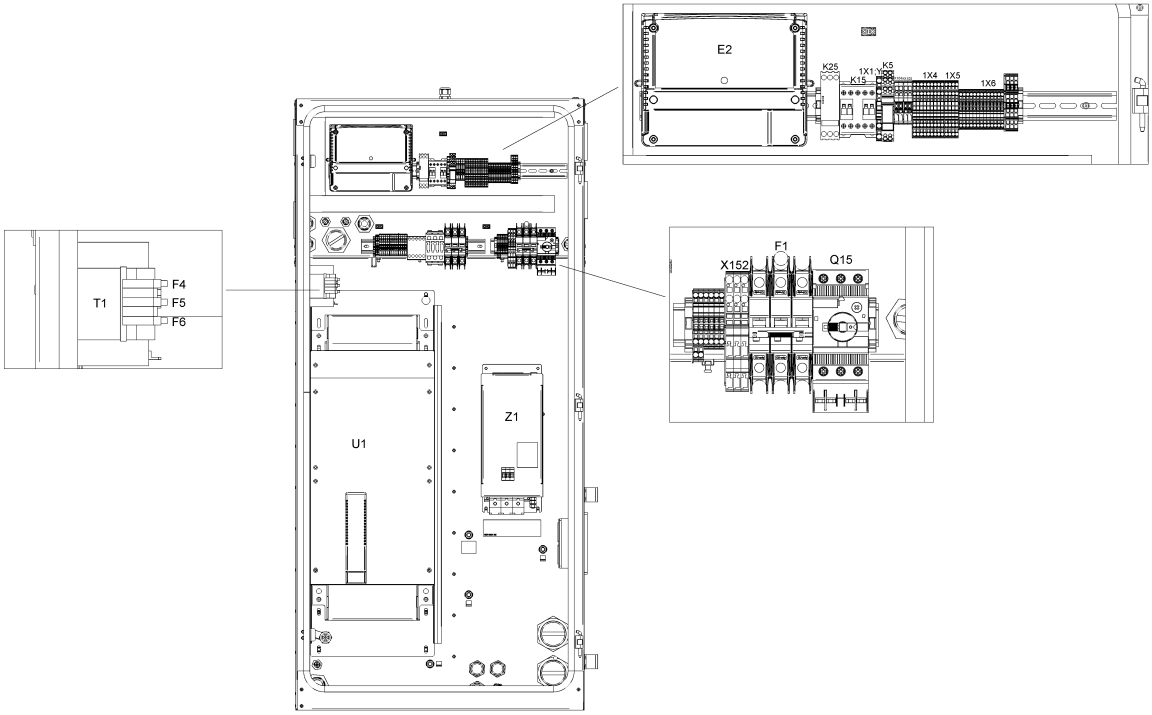
E2
K25
K15
1X1
K5
1X4
1X5
1X6
T1
F4
F5
F6
U1
Z1
F1
X152
Q15

Ref	Part Number	Qty	Name	Validity	EL
	1649 8002 75	1	WIRE HARNESS	**(12/12/2018 - 24/02/2019)** (CAPPRM:ASME + MOVOL:380V , CAPPRM:MHLW + COOL:AIR + MOVOL:200V) **(25/02/2019 - 27/11/2019)** (CAPPRM:ASME + MOVOL:380V , CAPPRM:MHLW + MOVOL:200V) + COOL:AIR	
	Electrical legend:	Relative Humidity sensor			
	1649 8001 45	3	MOTOR CABLE	**(12/12/2018 - 24/02/2019)** (CAPPRM:ASME + MOVOL:380V , CAPPRM:MHLW + COOL:AIR + MOVOL:200V) **(25/02/2019 - 27/11/2019)** (CAPPRM:ASME + MOVOL:380V , CAPPRM:MHLW + MOVOL:200V) + COOL:AIR	
	Electrical legend:	Motor conduit			
	1649 8001 48	1	MOTOR CABLE	**(12/12/2018 - 24/02/2019)** (CAPPRM:ASME + MOVOL:380V , CAPPRM:MHLW + COOL:AIR + MOVOL:200V) **(25/02/2019 - 27/11/2019)** (CAPPRM:ASME + MOVOL:380V , CAPPRM:MHLW + MOVOL:200V) + COOL:AIR	
	Electrical legend:	Motor conduit			
		1	DATA LABEL	**(12/12/2018 - 24/02/2019)** (CAPPRM:ASME + MOVOL:380V , CAPPRM:MHLW + COOL:AIR + MOVOL:200V) **(25/02/2019 - 27/11/2019)** (CAPPRM:ASME + MOVOL:380V , CAPPRM:MHLW + MOVOL:200V) + COOL:AIR	Label
	1079 9901 68	1	WARNING LABEL	**(12/12/2018 - 24/02/2019)** (CAPPRM:ASME + MOVOL:380V , CAPPRM:MHLW + COOL:AIR + MOVOL:200V) **(25/02/2019 - 27/11/2019)** (CAPPRM:ASME + MOVOL:380V , CAPPRM:MHLW + MOVOL:200V) + COOL:AIR	Label
	1649 8005 00	-	LABEL	**(12/12/2018 - 24/02/2019)** (CAPPRM:ASME + MOVOL:380V , CAPPRM:MHLW + COOL:AIR + MOVOL:200V) **(25/02/2019 - 27/11/2019)** (CAPPRM:ASME + MOVOL:380V , CAPPRM:MHLW + MOVOL:200V) + COOL:AIR	Label
	1900 5350 15	1	INVERTER	**(12/12/2018 - 24/02/2019)** (CAPPRM:ASME + MOVOL:380V , CAPPRM:MHLW + COOL:AIR + MOVOL:200V) **(25/02/2019 - 27/11/2019)** (CAPPRM:ASME + MOVOL:380V , CAPPRM:MHLW + MOVOL:200V) + COOL:AIR	U1
	1631 2079 00	1	NANOPERMRING	**(12/12/2018 - 24/02/2019)** (CAPPRM:ASME + MOVOL:380V , CAPPRM:MHLW + COOL:AIR + MOVOL:200V) **(25/02/2019 - 27/11/2019)** (CAPPRM:ASME + MOVOL:380V , CAPPRM:MHLW + MOVOL:200V) + COOL:AIR	
	Electrical legend:	Nanoperm ring			
	0697 9811 17	2	PLUG	**(12/12/2018 - 24/02/2019)** (CAPPRM:ASME + MOVOL:380V , CAPPRM:MHLW + COOL:AIR + MOVOL:200V) **(25/02/2019 - 27/11/2019)** (CAPPRM:ASME + MOVOL:380V , CAPPRM:MHLW + MOVOL:200V) + COOL:AIR	
	Electrical legend:	Plug for transfo supply			
	0989 3700 48	2	NUT	**(12/12/2018 - 24/02/2019)** (CAPPRM:ASME + MOVOL:380V , CAPPRM:MHLW + COOL:AIR + MOVOL:200V) **(25/02/2019 - 27/11/2019)** (CAPPRM:ASME + MOVOL:380V , CAPPRM:MHLW + MOVOL:200V) + COOL:AIR	
	Electrical legend:	Nut for transfo supply			
	0698 5140 72	1	CABLE GLAND	**(12/12/2018 - 24/02/2019)** (CAPPRM:ASME + MOVOL:380V , CAPPRM:MHLW + COOL:AIR + MOVOL:200V) **(25/02/2019 - 27/11/2019)** (CAPPRM:ASME + MOVOL:380V , CAPPRM:MHLW + MOVOL:200V) + COOL:AIR	Fan

Legend:

CAPPRE:IEC - Component approval electrical:IEC
CAPPRM:ASME - Component approval mechanical:ASME
CAPPRM:MHLW - Component approval mechanical:MHLW
COOL:AIR - Cooling:Air cooled
FREQ:60HZ - Frequency:60 Hz
IDRY:Y - Integrated dryer:Yes
MODEL:GA75VP_16 - Model:GA 75VSD+
MOVOL:200V - Supply voltage:200 V
MOVOL:380V - Supply voltage:380 V

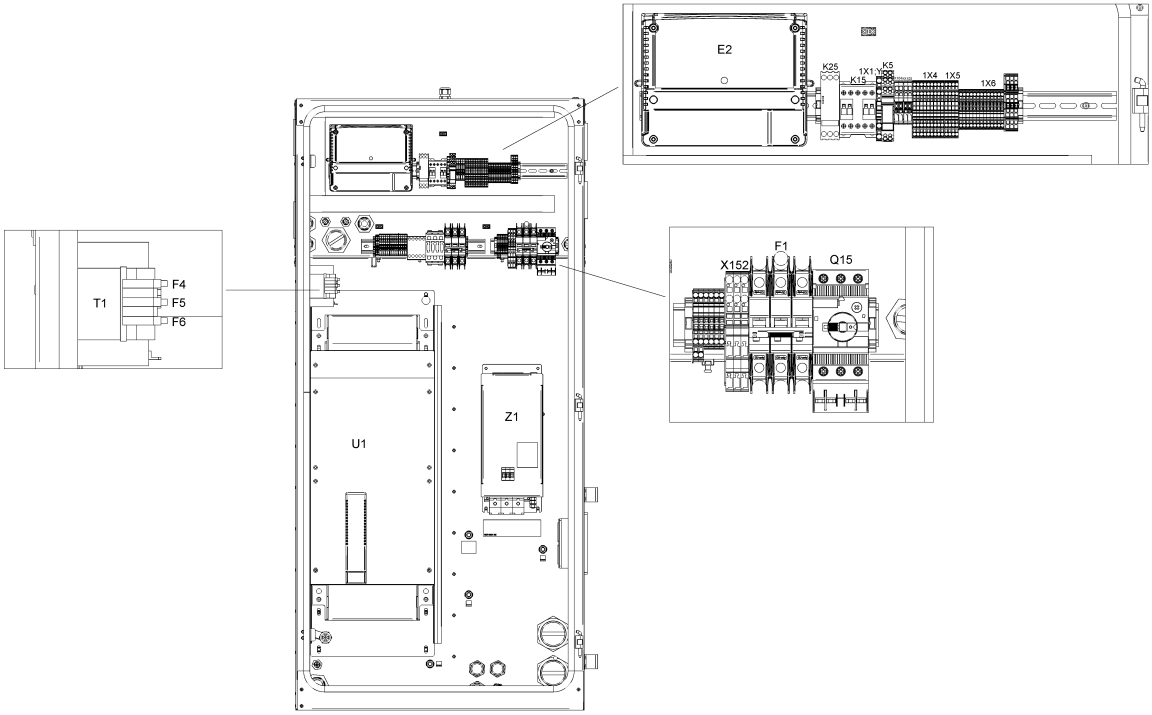
E2
K25
K15
1X1
K5
1X4
1X5
1X6
T1
F4
F5
F6
F1
X152
Q15
U1
Z1

Ref	Part Number	Qty	Name	Validity	EL
	0698 5140 71	1	CABLE GLAND	**(12/12/2018 - 24/02/2019)** (CAPPRM:ASME + MOVOL:380V , CAPPRM:MHLW + COOL:AIR + MOVOL:200V) **(25/02/2019 - 27/11/2019)** (CAPPRM:ASME + MOVOL:380V , CAPPRM:MHLW + MOVOL:200V) + COOL:AIR	
	Electrical legend:	Ambient sensor			
	0697 9809 20	1	LOCKNUT	**(12/12/2018 - 24/02/2019)** (CAPPRM:ASME + MOVOL:380V , CAPPRM:MHLW + COOL:AIR + MOVOL:200V) **(25/02/2019 - 27/11/2019)** (CAPPRM:ASME + MOVOL:380V , CAPPRM:MHLW + MOVOL:200V) + COOL:AIR	
	Electrical legend:	Ambient sensor			
	1089 9556 44	1	FAN WITH FILTER	**(12/12/2018 - 24/02/2019)** (CAPPRM:ASME + MOVOL:380V , CAPPRM:MHLW + COOL:AIR + MOVOL:200V) **(25/02/2019 - 27/11/2019)** (CAPPRM:ASME + MOVOL:380V , CAPPRM:MHLW + MOVOL:200V) + COOL:AIR	Cubicle fan
		4	AIR INLET WITHOUT FILTER	**(12/12/2018 - 24/02/2019)** (CAPPRM:ASME + MOVOL:380V , CAPPRM:MHLW + COOL:AIR + MOVOL:200V) **(25/02/2019 - 27/11/2019)** (CAPPRM:ASME + MOVOL:380V , CAPPRM:MHLW + MOVOL:200V) + COOL:AIR	-
	Service kits:	2901 9901 01 - PREVENTIVE MAINTENANCE KIT - GA 75L VSD+ 2901 9900 95 - AIR FILTER KIT - GA 75L VSD+			
	1088 0032 09	1	CONNECTOR	**(12/12/2018 - 24/02/2019)** (CAPPRM:ASME + MOVOL:380V , CAPPRM:MHLW + COOL:AIR + MOVOL:200V) **(25/02/2019 - 27/11/2019)** (CAPPRM:ASME + MOVOL:380V , CAPPRM:MHLW + MOVOL:200V) + COOL:AIR	X3
	1089 9572 05	1	LINE FILTER	**(12/12/2018 - 24/02/2019)** (CAPPRM:ASME + MOVOL:380V , CAPPRM:MHLW + COOL:AIR + MOVOL:200V) **(25/02/2019 - 27/11/2019)** (CAPPRM:ASME + MOVOL:380V , CAPPRM:MHLW + MOVOL:200V) + COOL:AIR	Z1 for 75 kw
	Electrical legend:	Z1 for 75 kw			
	1089 9562 04	1	STRAP	**(12/12/2018 - 24/02/2019)** (CAPPRM:ASME + MOVOL:380V , CAPPRM:MHLW + COOL:AIR + MOVOL:200V) **(25/02/2019 - 27/11/2019)** (CAPPRM:ASME + MOVOL:380V , CAPPRM:MHLW + MOVOL:200V) + COOL:AIR	HF-screen
	1089 9514 56	1	TRANSFORMER	**(12/12/2018 - 24/02/2019)** (CAPPRM:ASME + MOVOL:380V , CAPPRM:MHLW + COOL:AIR + MOVOL:200V) **(25/02/2019 - 27/11/2019)** (CAPPRM:ASME + MOVOL:380V , CAPPRM:MHLW + MOVOL:200V) + COOL:AIR	T1
	1089 9522 26	1	CIRCUIT BREAKER	**(12/12/2018 - 24/02/2019)** (CAPPRM:ASME + MOVOL:380V , CAPPRM:MHLW + COOL:AIR + MOVOL:200V) **(25/02/2019 - 27/11/2019)** (CAPPRM:ASME + MOVOL:380V , CAPPRM:MHLW + MOVOL:200V) + COOL:AIR	F1
	1089 9513 41	1	PUSH BUTTON	**(12/12/2018 - 24/02/2019)** (CAPPRM:ASME + MOVOL:380V , CAPPRM:MHLW + COOL:AIR + MOVOL:200V) **(25/02/2019 - 27/11/2019)** (CAPPRM:ASME + MOVOL:380V , CAPPRM:MHLW + MOVOL:200V) + COOL:AIR	S3
	1089 9513 28	1	HOLDER	**(12/12/2018 - 24/02/2019)** (CAPPRM:ASME + MOVOL:380V , CAPPRM:MHLW + COOL:AIR + MOVOL:200V) **(25/02/2019 - 27/11/2019)** (CAPPRM:ASME + MOVOL:380V , CAPPRM:MHLW + MOVOL:200V) + COOL:AIR	S3

Legend:

CAPPRE:IEC - Component approval electrical:IEC
CAPPRM:ASME - Component approval mechanical:ASME
CAPPRM:MHLW - Component approval mechanical:MHLW
COOL:AIR - Cooling:Air cooled
FREQ:60HZ - Frequency:60 Hz
IDRY:Y - Integrated dryer:Yes
MODEL:GA75VP_16 - Model:GA 75VSD+
MOVOL:200V - Supply voltage:200 V
MOVOL:380V - Supply voltage:380 V

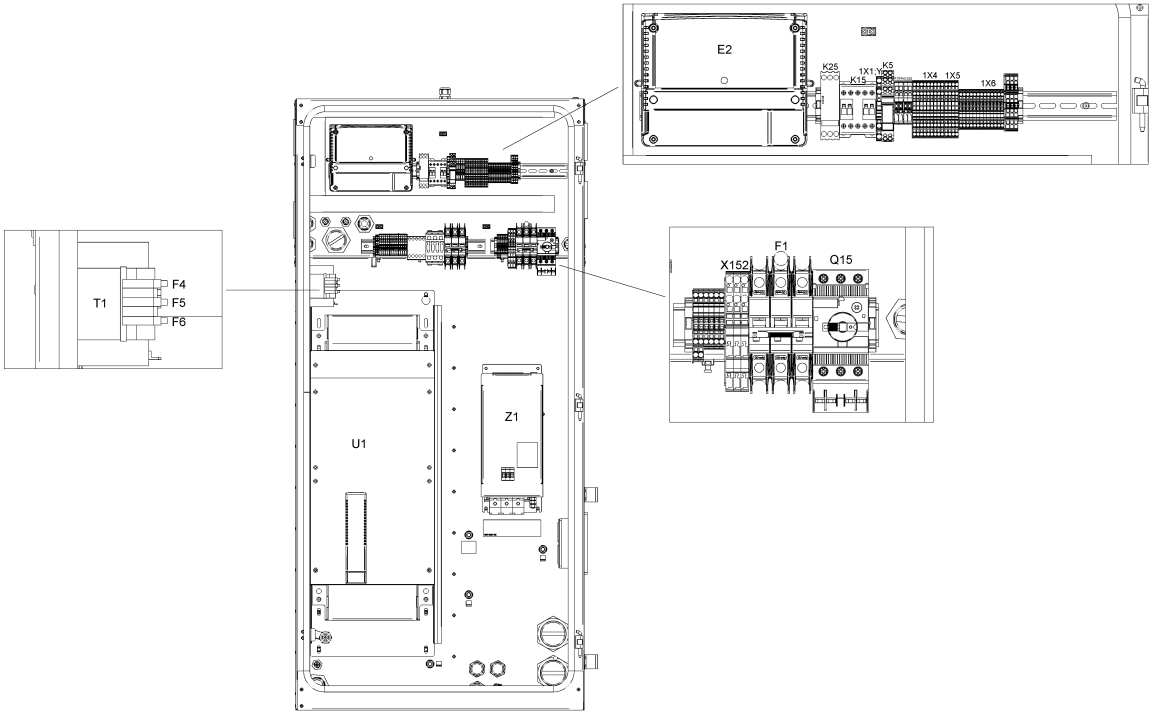
E2
K25
K15
1X1
K5
1X4
1X5
1X6
T1
F4
F5
F6
U1
Z1
F1
X152
Q15

Ref	Part Number	Qty	Name	Validity	EL
	~~1089 9513 30~~	4	CONTACTOR	**(12/12/2018 - 24/02/2019)** (CAPPRM:ASME + MOVOL:380V , CAPPRM:MHLW + COOL:AIR + MOVOL:200V) **(25/02/2019 - 27/11/2019)** (CAPPRM:ASME + MOVOL:380V , CAPPRM:MHLW + MOVOL:200V) + COOL:AIR	S3
	Substituted by:	1089 9513 04 - CONTACT BLOCK (quantity: 1)			
	1088 0031 02	1	CONNECTOR 2-POLE	**(12/12/2018 - 17/02/2019)** (CAPPRM:ASME + MOVOL:380V , CAPPRM:MHLW + COOL:AIR + MOVOL:200V)	
	1088 0039 07	3	TERMINAL	**(12/12/2018 - 24/02/2019)** (CAPPRM:ASME + MOVOL:380V , CAPPRM:MHLW + COOL:AIR + MOVOL:200V) **(25/02/2019 - 27/11/2019)** (CAPPRM:ASME + MOVOL:380V , CAPPRM:MHLW + MOVOL:200V) + COOL:AIR	X152
	1088 0039 05	1	PLATE	**(12/12/2018 - 24/02/2019)** (CAPPRM:ASME + MOVOL:380V , CAPPRM:MHLW + COOL:AIR + MOVOL:200V) **(25/02/2019 - 27/11/2019)** (CAPPRM:ASME + MOVOL:380V , CAPPRM:MHLW + MOVOL:200V) + COOL:AIR	X152
	1088 0039 26	1	CONNECTOR	**(12/12/2018 - 24/02/2019)** (CAPPRM:ASME + MOVOL:380V , CAPPRM:MHLW + COOL:AIR + MOVOL:200V) **(25/02/2019 - 27/11/2019)** (CAPPRM:ASME + MOVOL:380V , CAPPRM:MHLW + MOVOL:200V) + COOL:AIR	
	Electrical legend:	X152 (remove coding pin 1,3)			
	1088 0037 99	4	PIN	**(12/12/2018 - 24/02/2019)** (CAPPRM:ASME + MOVOL:380V , CAPPRM:MHLW + COOL:AIR + MOVOL:200V) **(25/02/2019 - 27/11/2019)** (CAPPRM:ASME + MOVOL:380V , CAPPRM:MHLW + MOVOL:200V) + COOL:AIR	X152:1; 3
	~~1088 0031 81~~	7	END STOP BRACKET 6MM	**(12/12/2018 - 24/02/2019)** (CAPPRM:ASME + MOVOL:380V , CAPPRM:MHLW + COOL:AIR + MOVOL:200V) **(25/02/2019 - 27/11/2019)** (CAPPRM:ASME + MOVOL:380V , CAPPRM:MHLW + MOVOL:200V) + COOL:AIR	
	Electrical legend:	Connector/terminal rail			
	Substituted by:	1089 0577 82 - END RETAINER (quantity: 1)			
	1088 0039 38	2	TERMINAL	**(12/12/2018 - 24/02/2019)** (CAPPRM:ASME + MOVOL:380V , CAPPRM:MHLW + COOL:AIR + MOVOL:200V) **(25/02/2019 - 27/11/2019)** (CAPPRM:ASME + MOVOL:380V , CAPPRM:MHLW + MOVOL:200V) + COOL:AIR	1X11:2,5
	1088 0039 40	1	PLATE	**(12/12/2018 - 24/02/2019)** (CAPPRM:ASME + MOVOL:380V , CAPPRM:MHLW + COOL:AIR + MOVOL:200V) **(25/02/2019 - 27/11/2019)** (CAPPRM:ASME + MOVOL:380V , CAPPRM:MHLW + MOVOL:200V) + COOL:AIR	1X11
	1088 0039 34	4	TERMINAL	**(12/12/2018 - 24/02/2019)** (CAPPRM:ASME + MOVOL:380V , CAPPRM:MHLW + COOL:AIR + MOVOL:200V) **(25/02/2019 - 27/11/2019)** (CAPPRM:ASME + MOVOL:380V , CAPPRM:MHLW + MOVOL:200V) + COOL:AIR	
	Electrical legend:	1X11:30,301,34			
	1088 0039 35	1	PLATE	**(12/12/2018 - 24/02/2019)** (CAPPRM:ASME + MOVOL:380V , CAPPRM:MHLW + COOL:AIR + MOVOL:200V) **(25/02/2019 - 27/11/2019)** (CAPPRM:ASME + MOVOL:380V , CAPPRM:MHLW + MOVOL:200V) + COOL:AIR	1X11
	1088 0039 04	2	TERMINAL	**(12/12/2018 - 24/02/2019)** (CAPPRM:ASME + MOVOL:380V , CAPPRM:MHLW + COOL:AIR + MOVOL:200V) **(25/02/2019 - 27/11/2019)** (CAPPRM:ASME + MOVOL:380V , CAPPRM:MHLW + MOVOL:200V) + COOL:AIR	X104a

Legend:

CAPPRE:IEC - Component approval electrical:IEC
CAPPRM:ASME - Component approval mechanical:ASME
CAPPRM:MHLW - Component approval mechanical:MHLW
COOL:AIR - Cooling:Air cooled
FREQ:60HZ - Frequency:60 Hz
IDRY:Y - Integrated dryer:Yes
MODEL:GA75VP_16 - Model:GA 75VSD+
MOVOL:200V - Supply voltage:200 V
MOVOL:380V - Supply voltage:380 V

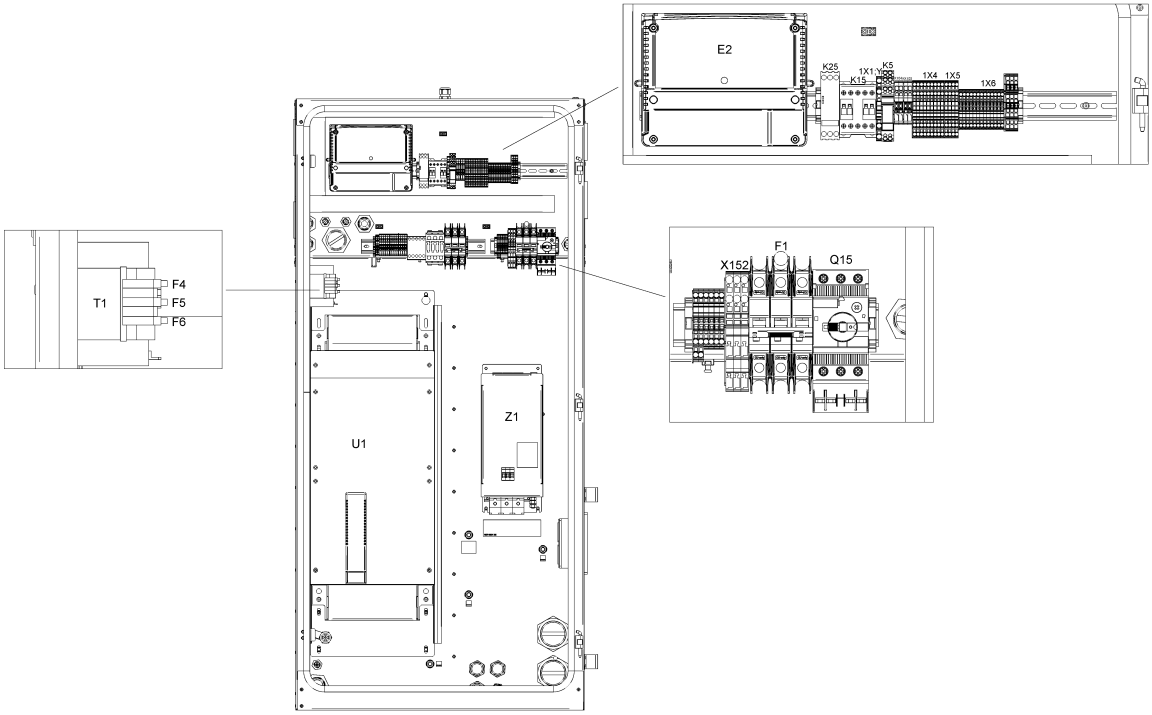
E2
K25
K15
1X1
K5
1X4
1X5
1X6
T1
F4
F5
F6
F1
X152
Q15
U1
Z1

Ref	Part Number	Qty	Name	Validity	EL
	1088 0037 99	2	PIN	**(12/12/2018 - 24/02/2019)** (CAPPRM:ASME + MOVOL:380V , CAPPRM:MHLW + COOL:AIR + MOVOL:200V) **(25/02/2019 - 27/11/2019)** (CAPPRM:ASME + MOVOL:380V , CAPPRM:MHLW + MOVOL:200V) + COOL:AIR	X104a/X105
	1088 0039 02	1	PLATE	**(12/12/2018 - 24/02/2019)** (CAPPRM:ASME + MOVOL:380V , CAPPRM:MHLW + COOL:AIR + MOVOL:200V) **(25/02/2019 - 27/11/2019)** (CAPPRM:ASME + MOVOL:380V , CAPPRM:MHLW + MOVOL:200V) + COOL:AIR	X104a
	1088 0039 07	2	TERMINAL	**(12/12/2018 - 24/02/2019)** (CAPPRM:ASME + MOVOL:380V , CAPPRM:MHLW + COOL:AIR + MOVOL:200V) **(25/02/2019 - 27/11/2019)** (CAPPRM:ASME + MOVOL:380V , CAPPRM:MHLW + MOVOL:200V) + COOL:AIR	X105
	1088 0039 05	1	PLATE	**(12/12/2018 - 24/02/2019)** (CAPPRM:ASME + MOVOL:380V , CAPPRM:MHLW + COOL:AIR + MOVOL:200V) **(25/02/2019 - 27/11/2019)** (CAPPRM:ASME + MOVOL:380V , CAPPRM:MHLW + MOVOL:200V) + COOL:AIR	X105
	1088 0039 34	13	TERMINAL	**(12/12/2018 - 24/02/2019)** (CAPPRM:ASME + MOVOL:380V , CAPPRM:MHLW + COOL:AIR + MOVOL:200V) **(25/02/2019 - 27/11/2019)** (CAPPRM:ASME + MOVOL:380V , CAPPRM:MHLW + MOVOL:200V) + COOL:AIR	1X6
	1088 0037 69	3	CONNECTOR	**(12/12/2018 - 24/02/2019)** (CAPPRM:ASME + MOVOL:380V , CAPPRM:MHLW + COOL:AIR + MOVOL:200V) **(25/02/2019 - 27/11/2019)** (CAPPRM:ASME + MOVOL:380V , CAPPRM:MHLW + MOVOL:200V) + COOL:AIR	1X7
	1088 0039 35	1	PLATE	**(12/12/2018 - 24/02/2019)** (CAPPRM:ASME + MOVOL:380V , CAPPRM:MHLW + COOL:AIR + MOVOL:200V) **(25/02/2019 - 27/11/2019)** (CAPPRM:ASME + MOVOL:380V , CAPPRM:MHLW + MOVOL:200V) + COOL:AIR	1X6
	1088 0040 37	1	END PLATE	**(12/12/2018 - 24/02/2019)** (CAPPRM:ASME + MOVOL:380V , CAPPRM:MHLW + COOL:AIR + MOVOL:200V) **(25/02/2019 - 27/11/2019)** (CAPPRM:ASME + MOVOL:380V , CAPPRM:MHLW + MOVOL:200V) + COOL:AIR	1X7
	1088 0039 36	9	TERMINAL	**(12/12/2018 - 24/02/2019)** (CAPPRM:ASME + MOVOL:380V , CAPPRM:MHLW + COOL:AIR + MOVOL:200V) **(25/02/2019 - 27/11/2019)** (CAPPRM:ASME + MOVOL:380V , CAPPRM:MHLW + MOVOL:200V) + COOL:AIR	1X4
	1088 0039 36	4	TERMINAL	**(12/12/2018 - 24/02/2019)** (CAPPRM:ASME + MOVOL:380V , CAPPRM:MHLW + COOL:AIR + MOVOL:200V) **(25/02/2019 - 27/11/2019)** (CAPPRM:ASME + MOVOL:380V , CAPPRM:MHLW + MOVOL:200V) + COOL:AIR	1X6
	1088 0039 37	1	END PLATE	**(12/12/2018 - 24/02/2019)** (CAPPRM:ASME + MOVOL:380V , CAPPRM:MHLW + COOL:AIR + MOVOL:200V) **(25/02/2019 - 27/11/2019)** (CAPPRM:ASME + MOVOL:380V , CAPPRM:MHLW + MOVOL:200V) + COOL:AIR	1X4
	1088 0039 37	1	END PLATE	**(12/12/2018 - 24/02/2019)** (CAPPRM:ASME + MOVOL:380V , CAPPRM:MHLW + COOL:AIR + MOVOL:200V) **(25/02/2019 - 27/11/2019)** (CAPPRM:ASME + MOVOL:380V , CAPPRM:MHLW + MOVOL:200V) + COOL:AIR	1X6

Legend:

CAPPRE:IEC - Component approval electrical:IEC
CAPPRM:ASME - Component approval mechanical:ASME
CAPPRM:MHLW - Component approval mechanical:MHLW
COOL:AIR - Cooling:Air cooled
FREQ:60HZ - Frequency:60 Hz
IDRY:Y - Integrated dryer:Yes
MODEL:GA75VP_16 - Model:GA 75VSD+
MOVOL:200V - Supply voltage:200 V
MOVOL:380V - Supply voltage:380 V

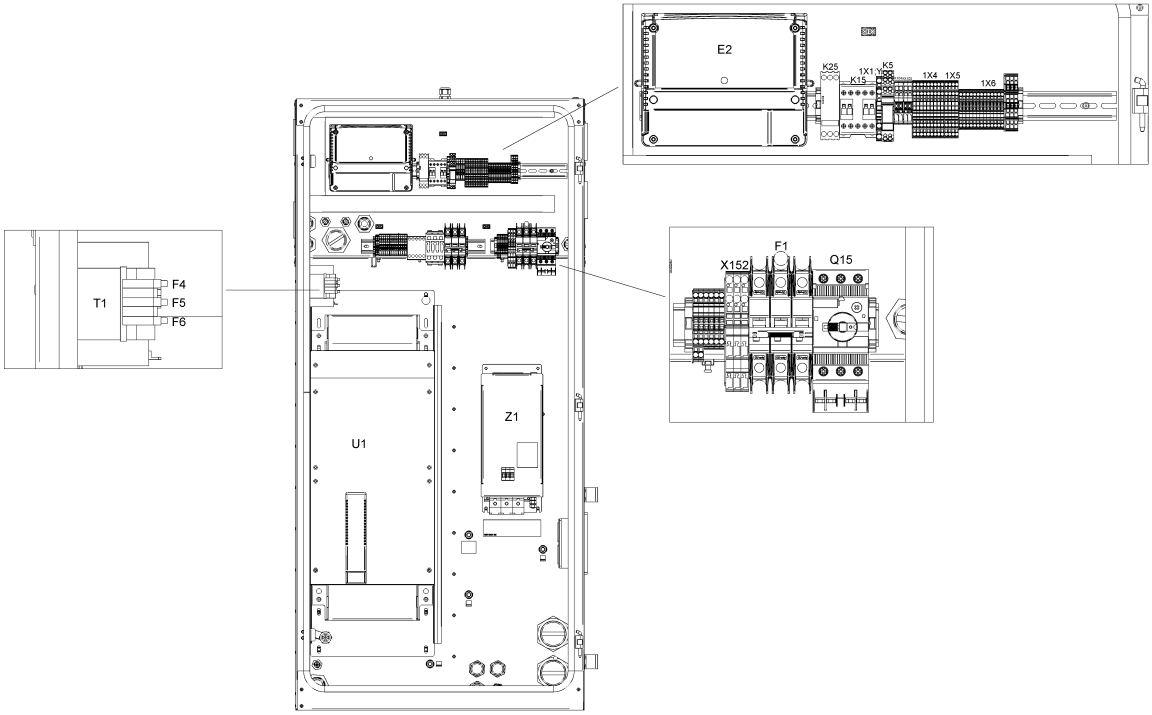
E2
K25
K15
1X1
K5
1X4
1X5
1X6
T1
F4
F5
F6
F1
X152
Q15
U1
Z1

21.12 - Cubicle components GA 75L VSD+ - 200V-380V/60Hz - IEC - Full-Feature (12/12/2018 - 27/11/2019)

(MOVOL:200V , MOVOL:380V) + CAPPRE:IEC + FREQ:60HZ + IDRY:Y + MODEL:GA75VP_16

Ref	Part Number	Qty	Name	Validity	EL
	1088 0039 37	1	END PLATE	**(12/12/2018 - 24/02/2019)** (CAPPRM:ASME + MOVOL:380V , CAPPRM:MHLW + COOL:AIR + MOVOL:200V) **(25/02/2019 - 27/11/2019)** (CAPPRM:ASME + MOVOL:380V , CAPPRM:MHLW + MOVOL:200V) + COOL:AIR	1X1:Y/D
	1088 0037 81	1	CONNECTOR	**(12/12/2018 - 24/02/2019)** (CAPPRM:ASME + MOVOL:380V , CAPPRM:MHLW + COOL:AIR + MOVOL:200V) **(25/02/2019 - 27/11/2019)** (CAPPRM:ASME + MOVOL:380V , CAPPRM:MHLW + MOVOL:200V) + COOL:AIR	2X27
	1088 0037 80	1	CONNECTOR	**(12/12/2018 - 24/02/2019)** (CAPPRM:ASME + MOVOL:380V , CAPPRM:MHLW + COOL:AIR + MOVOL:200V) **(25/02/2019 - 27/11/2019)** (CAPPRM:ASME + MOVOL:380V , CAPPRM:MHLW + MOVOL:200V) + COOL:AIR	2X28
	1088 0031 32	1	CONNECTOR	**(12/12/2018 - 24/02/2019)** (CAPPRM:ASME + MOVOL:380V , CAPPRM:MHLW + COOL:AIR + MOVOL:200V) **(25/02/2019 - 27/11/2019)** (CAPPRM:ASME + MOVOL:380V , CAPPRM:MHLW + MOVOL:200V) + COOL:AIR	2X30
	1088 0031 26	1	CONNECTOR 6-POLE	**(12/12/2018 - 24/02/2019)** (CAPPRM:ASME + MOVOL:380V , CAPPRM:MHLW + COOL:AIR + MOVOL:200V) **(25/02/2019 - 27/11/2019)** (CAPPRM:ASME + MOVOL:380V , CAPPRM:MHLW + MOVOL:200V) + COOL:AIR	2X31
	~~1089 9664 06~~	1	SWITCH	**(12/12/2018 - 24/02/2019)** (CAPPRM:ASME + MOVOL:380V , CAPPRM:MHLW + COOL:AIR + MOVOL:200V) **(25/02/2019 - 27/11/2019)** (CAPPRM:ASME + MOVOL:380V , CAPPRM:MHLW + MOVOL:200V) + COOL:AIR	Q15
	Substituted by:	1089 9551 97 - AUX.CONTACT CIRCUIT BREAKER (quantity: 1)			
	1089 9551 18	1	CIRCUIT BREAKER	**(12/12/2018 - 24/02/2019)** (CAPPRM:ASME + MOVOL:380V , CAPPRM:MHLW + COOL:AIR + MOVOL:200V) **(25/02/2019 - 27/11/2019)** (CAPPRM:ASME + MOVOL:380V , CAPPRM:MHLW + MOVOL:200V) + COOL:AIR	Q15
	1088 0038 26	1	TERMINAL	**(12/12/2018 - 24/02/2019)** (CAPPRM:ASME + MOVOL:380V , CAPPRM:MHLW + COOL:AIR + MOVOL:200V) **(25/02/2019 - 27/11/2019)** (CAPPRM:ASME + MOVOL:380V , CAPPRM:MHLW + MOVOL:200V) + COOL:AIR	1X1:Y/D
	1089 9602 79	1	CONTACTOR 110 V	**(12/12/2018 - 24/02/2019)** (CAPPRM:ASME + MOVOL:380V , CAPPRM:MHLW + COOL:AIR + MOVOL:200V) **(25/02/2019 - 27/11/2019)** (CAPPRM:ASME + MOVOL:380V , CAPPRM:MHLW + MOVOL:200V) + COOL:AIR	K15
	1089 9461 26	1	PHASE SEQUENCE RELAY	**(12/12/2018 - 24/02/2019)** (CAPPRM:ASME + MOVOL:380V , CAPPRM:MHLW + COOL:AIR + MOVOL:200V) **(25/02/2019 - 27/11/2019)** (CAPPRM:ASME + MOVOL:380V , CAPPRM:MHLW + MOVOL:200V) + COOL:AIR	K25
	1088 0032 17	1	RELAY 115 VAC	**(12/12/2018 - 24/02/2019)** (CAPPRM:ASME + MOVOL:380V , CAPPRM:MHLW + COOL:AIR + MOVOL:200V) **(25/02/2019 - 27/11/2019)** (CAPPRM:ASME + MOVOL:380V , CAPPRM:MHLW + MOVOL:200V) + COOL:AIR	K5
	0991 8011 21	AR	CABLE TRAY	**(12/12/2018 - 24/02/2019)** (CAPPRM:ASME + MOVOL:380V , CAPPRM:MHLW + COOL:AIR + MOVOL:200V) **(25/02/2019 - 27/11/2019)** (CAPPRM:ASME + MOVOL:380V , CAPPRM:MHLW + MOVOL:200V) + COOL:AIR	L=1384mm

Legend:

CAPPRE:IEC - Component approval electrical:IEC
CAPPRM:ASME - Component approval mechanical:ASME
CAPPRM:MHLW - Component approval mechanical:MHLW
COOL:AIR - Cooling:Air cooled
FREQ:60HZ - Frequency:60 Hz
IDRY:Y - Integrated dryer:Yes
MODEL:GA75VP_16 - Model:GA 75VSD+
MOVOL:200V - Supply voltage:200 V
MOVOL:380V - Supply voltage:380 V

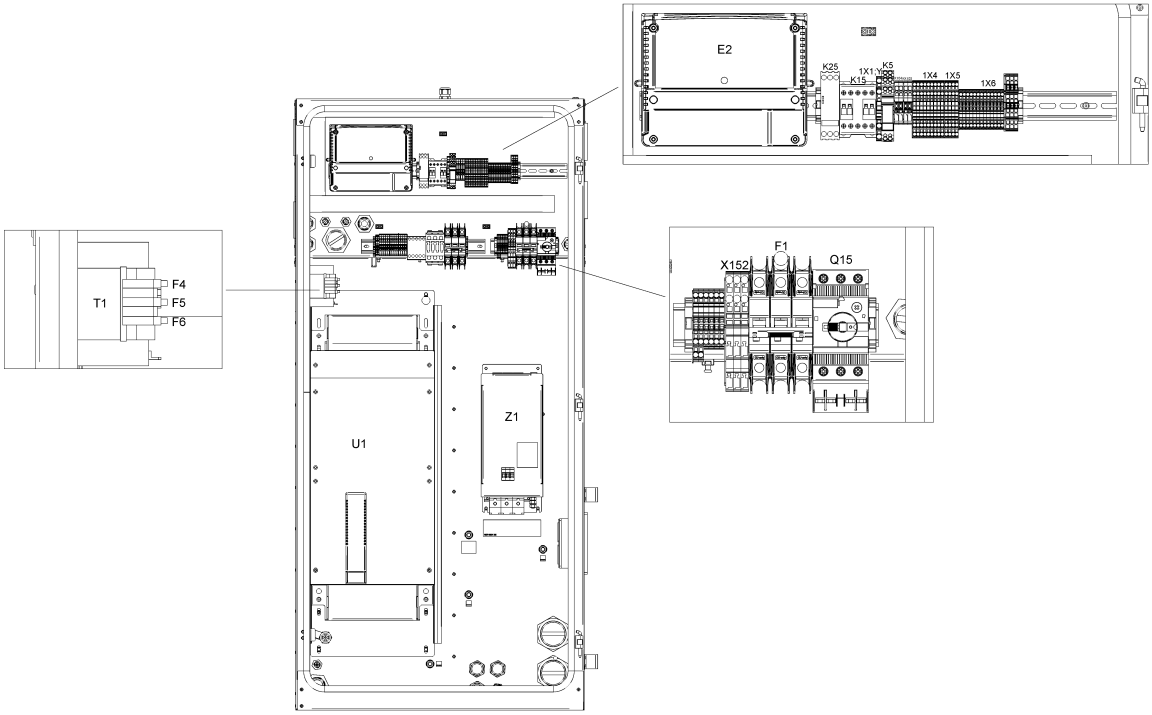
E2
K25
K15
1X1
K5
1X4
1X5
1X6
T1
F4
F5
F6
F1
X152
Q15
U1
Z1

Ref	Part Number	Qty	Name	Validity	EL
	1900 2203 02	1	DRYER RAIL	**(12/12/2018 - 24/02/2019)** (CAPPRM:ASME + MOVOL:380V , CAPPRM:MHLW + COOL:AIR + MOVOL:200V) **(25/02/2019 - 27/11/2019)** (CAPPRM:ASME + MOVOL:380V , CAPPRM:MHLW + MOVOL:200V) + COOL:AIR	
	Electrical legend:	Without trafo on dryer			
	1088 0031 13	1	CONNECTOR 13-POLE	**(12/12/2018 - 24/02/2019)** (CAPPRM:ASME + MOVOL:380V , CAPPRM:MHLW + COOL:AIR + MOVOL:200V) **(25/02/2019 - 27/11/2019)** (CAPPRM:ASME + MOVOL:380V , CAPPRM:MHLW + MOVOL:200V) + COOL:AIR	1X30
	1088 0037 82	1	CONNECTOR	**(12/12/2018 - 24/02/2019)** (CAPPRM:ASME + MOVOL:380V , CAPPRM:MHLW + COOL:AIR + MOVOL:200V) **(25/02/2019 - 27/11/2019)** (CAPPRM:ASME + MOVOL:380V , CAPPRM:MHLW + MOVOL:200V) + COOL:AIR	3X34
	0697 9811 13	1	PLUG	**(12/12/2018 - 24/02/2019)** (CAPPRM:ASME + MOVOL:380V , CAPPRM:MHLW + COOL:AIR + MOVOL:200V) **(25/02/2019 - 27/11/2019)** (CAPPRM:ASME + MOVOL:380V , CAPPRM:MHLW + MOVOL:200V) + COOL:AIR	
	Electrical legend:	Energy recovery			
	0989 3700 44	1	LOCKNUT	**(12/12/2018 - 24/02/2019)** (CAPPRM:ASME + MOVOL:380V , CAPPRM:MHLW + COOL:AIR + MOVOL:200V) **(25/02/2019 - 27/11/2019)** (CAPPRM:ASME + MOVOL:380V , CAPPRM:MHLW + MOVOL:200V) + COOL:AIR	
	Electrical legend:	Energy recovery			
	0697 9811 12	1	PLUG	**(12/12/2018 - 24/02/2019)** (CAPPRM:ASME + MOVOL:380V , CAPPRM:MHLW + COOL:AIR + MOVOL:200V) **(25/02/2019 - 27/11/2019)** (CAPPRM:ASME + MOVOL:380V , CAPPRM:MHLW + MOVOL:200V) + COOL:AIR	
	Electrical legend:	Control circuit of T10			
	0989 3700 43	1	NUT	**(12/12/2018 - 24/02/2019)** (CAPPRM:ASME + MOVOL:380V , CAPPRM:MHLW + COOL:AIR + MOVOL:200V) **(25/02/2019 - 27/11/2019)** (CAPPRM:ASME + MOVOL:380V , CAPPRM:MHLW + MOVOL:200V) + COOL:AIR	
	Electrical legend:	Control circuit of T10			
	0697 9811 10	1	PLUG	**(12/12/2018 - 24/02/2019)** (CAPPRM:ASME + MOVOL:380V , CAPPRM:MHLW + COOL:AIR + MOVOL:200V) **(25/02/2019 - 27/11/2019)** (CAPPRM:ASME + MOVOL:380V , CAPPRM:MHLW + MOVOL:200V) + COOL:AIR	
	Electrical legend:	Plug for smartbox hole			
	0989 3700 41	1	LOCKNUT	**(12/12/2018 - 24/02/2019)** (CAPPRM:ASME + MOVOL:380V , CAPPRM:MHLW + COOL:AIR + MOVOL:200V) **(25/02/2019 - 27/11/2019)** (CAPPRM:ASME + MOVOL:380V , CAPPRM:MHLW + MOVOL:200V) + COOL:AIR	
	Electrical legend:	Nut for smartbox hole			

Legend:

CAPPRE:IEC - Component approval electrical:IEC
CAPPRM:ASME - Component approval mechanical:ASME
CAPPRM:MHLW - Component approval mechanical:MHLW
COOL:AIR - Cooling:Air cooled
FREQ:60HZ - Frequency:60 Hz
IDRY:Y - Integrated dryer:Yes
MODEL:GA75VP_16 - Model:GA 75VSD+
MOVOL:200V - Supply voltage:200 V
MOVOL:380V - Supply voltage:380 V

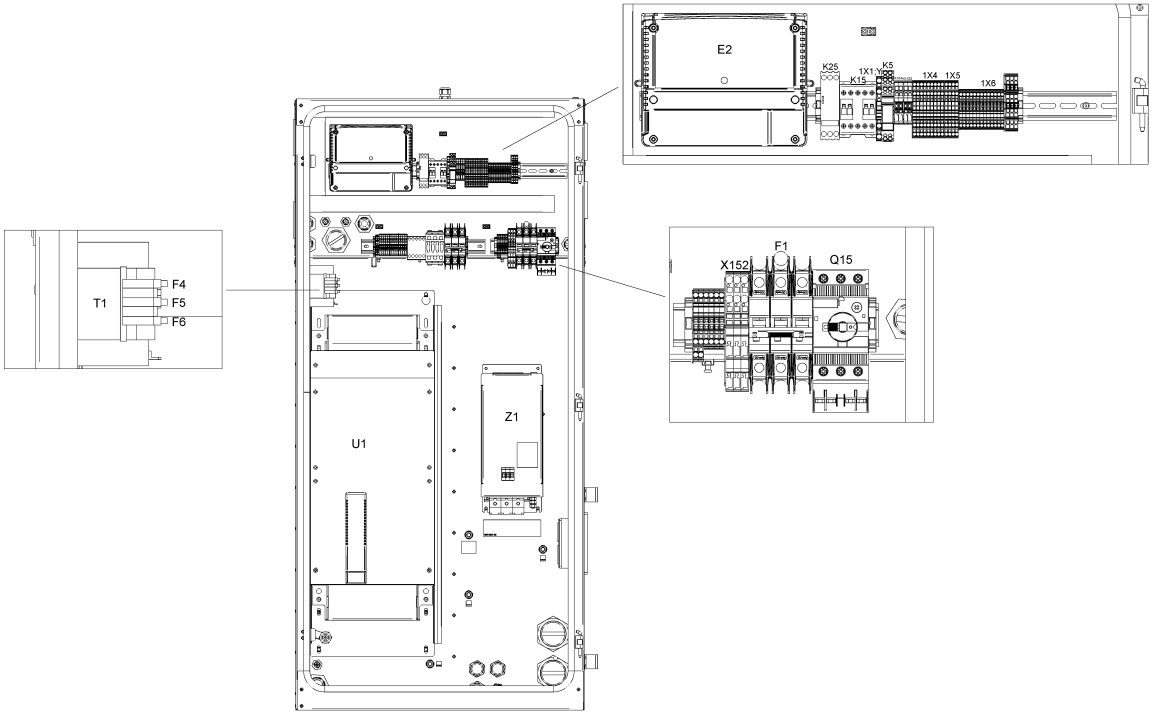
E2
K25
K15
1X1
K5
1X4
1X5
1X6
T1
F4
F5
F6
U1
Z1
X152
F1
Q15

21.13 - Cubicle components GA 75L VSD+ - 200V-380V/60Hz - IEC - Full-Feature (28/11/2019 - ...)

(MOVOL:200V , MOVOL:380V) + CAPPRE:IEC + FREQ:60HZ + IDRY:Y + MODEL:GA75VP_16

Ref	Part Number	Qty	Name	Validity	EL
	1900220243	1	CUBICLE	**(28/11/2019 - ...)**	
	9820 3000 31	1	ASSEMBLY DRAWING	**(28/11/2019 - ...)** (CAPPRM:ASME + MOVOL:380V , CAPPRM:MHLW + MOVOL:200V) + COOL:AIR	AD
	9820 3000 27	1	SERVICE DIAGRAM	**(28/11/2019 - ...)** (CAPPRM:ASME + MOVOL:380V , CAPPRM:MHLW + MOVOL:200V) + COOL:AIR	SD
	1622 3798 72	1	WIRE HARNESS	**(28/11/2019 - ...)** (CAPPRM:ASME + MOVOL:380V , CAPPRM:MHLW + MOVOL:200V) + COOL:AIR	Comm Cable
	1622 5099 04	1	DI CHANE CABLE (1400MM)	**(28/11/2019 - ...)** (CAPPRM:ASME + MOVOL:380V , CAPPRM:MHLW + MOVOL:200V) + COOL:AIR	
	Electrical legend:	Comm Cable Loose supply			
	1649 8006 00	1	CUBICLE	**(28/11/2019 - ...)** (CAPPRM:ASME + MOVOL:380V , CAPPRM:MHLW + MOVOL:200V) + COOL:AIR	MSA
	1649 8001 32	1	PLATE NEOS "D"	**(28/11/2019 - ...)** (CAPPRM:ASME + MOVOL:380V , CAPPRM:MHLW + MOVOL:200V) + COOL:AIR	
	Electrical legend:	Mounting plate			
	1649 8003 85	1	MOUNTING PLATE	**(28/11/2019 - ...)** (CAPPRM:ASME + MOVOL:380V , CAPPRM:MHLW + MOVOL:200V) + COOL:AIR	
	Electrical legend:	Mounting plate			
	1649 8002 39	1	WIRE HARNESS	**(28/11/2019 - ...)** (CAPPRM:ASME + MOVOL:380V , CAPPRM:MHLW + MOVOL:200V) + COOL:AIR	WH
	1649 8002 40	1	WIRE HARNESS	**(28/11/2019 - ...)** (CAPPRM:ASME + MOVOL:380V , CAPPRM:MHLW + MOVOL:200V) + COOL:AIR	WH
	1649 8002 72	1	CABLE POWER	**(28/11/2019 - ...)** (CAPPRM:ASME + MOVOL:380V , CAPPRM:MHLW + MOVOL:200V) + COOL:AIR	
	Electrical legend:	Full feature (FF) Drain			
	1649 8002 73	1	WIRE HARNESS	**(28/11/2019 - ...)** (CAPPRM:ASME + MOVOL:380V , CAPPRM:MHLW + MOVOL:200V) + COOL:AIR	
	Electrical legend:	Pack Drain + Air filter switch			
	1649 8002 75	1	WIRE HARNESS	**(28/11/2019 - ...)** (CAPPRM:ASME + MOVOL:380V , CAPPRM:MHLW + MOVOL:200V) + COOL:AIR	
	Electrical legend:	Relative Humidity sensor			
	1649 8001 45	3	MOTOR CABLE	**(28/11/2019 - ...)** (CAPPRM:ASME + MOVOL:380V , CAPPRM:MHLW + MOVOL:200V) + COOL:AIR	
	Electrical legend:	Motor conduit			
	1649 8001 48	1	MOTOR CABLE	**(28/11/2019 - ...)** (CAPPRM:ASME + MOVOL:380V , CAPPRM:MHLW + MOVOL:200V) + COOL:AIR	
	Electrical legend:	Motor conduit			
	1625 3906 31	1	DATA LABEL	**(28/11/2019 - ...)** (CAPPRM:ASME + MOVOL:380V , CAPPRM:MHLW + MOVOL:200V) + COOL:AIR	Label
	1079 9901 68	1	WARNING LABEL	**(28/11/2019 - ...)** (CAPPRM:ASME + MOVOL:380V , CAPPRM:MHLW + MOVOL:200V) + COOL:AIR	Label
	1649 8005 00	0	LABEL	**(28/11/2019 - ...)** (CAPPRM:ASME + MOVOL:380V , CAPPRM:MHLW + MOVOL:200V) + COOL:AIR	Label
	1900 5350 15	1	INVERTER	**(28/11/2019 - ...)** (CAPPRM:ASME + MOVOL:380V , CAPPRM:MHLW + MOVOL:200V) + COOL:AIR	U1
	1631 2079 00	1	NANOPERMRING	**(28/11/2019 - ...)** (CAPPRM:ASME + MOVOL:380V , CAPPRM:MHLW + MOVOL:200V) + COOL:AIR	
	Electrical legend:	Nanoperm ring			
	0697 9811 17	2	PLUG	**(28/11/2019 - ...)** (CAPPRM:ASME + MOVOL:380V , CAPPRM:MHLW + MOVOL:200V) + COOL:AIR	
	Electrical legend:	Plug for transfo supply			
	0989 3700 48	2	NUT	**(28/11/2019 - ...)** (CAPPRM:ASME + MOVOL:380V , CAPPRM:MHLW + MOVOL:200V) + COOL:AIR	

Legend:

CAPPRE:IEC - Component approval electrical:IEC
CAPPRM:ASME - Component approval mechanical:ASME
CAPPRM:MHLW - Component approval mechanical:MHLW
COOL:AIR - Cooling:Air cooled
FREQ:60HZ - Frequency:60 Hz
IDRY:Y - Integrated dryer:Yes
MODEL:GA75VP_16 - Model:GA 75VSD+
MOVOL:200V - Supply voltage:200 V
MOVOL:380V - Supply voltage:380 V

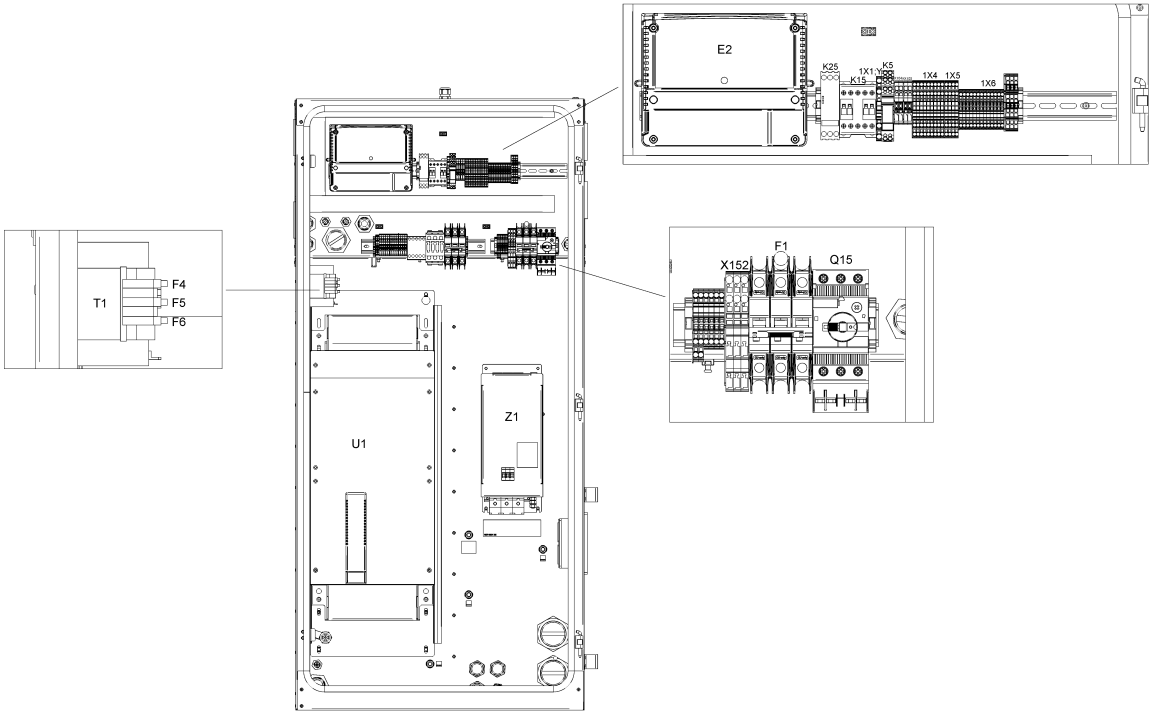
E2
K25
K15
1X1
K5
1X4
1X5
1X6
T1
F4
F5
F6
U1
Z1
X152
F1
Q15

Ref	Part Number	Qty	Name	Validity	EL
	Electrical legend:	Nut for transfo supply			
	0698 5140 72	1	CABLE GLAND	**(28/11/2019 - ...)** (CAPPRM:ASME + MOVOL:380V , CAPPRM:MHLW + MOVOL:200V) + COOL:AIR	Fan
	0698 5140 71	1	CABLE GLAND	**(28/11/2019 - ...)** (CAPPRM:ASME + MOVOL:380V , CAPPRM:MHLW + MOVOL:200V) + COOL:AIR	
	Electrical legend:	Ambient sensor			
	0697 9809 20	1	LOCKNUT	**(28/11/2019 - ...)** (CAPPRM:ASME + MOVOL:380V , CAPPRM:MHLW + MOVOL:200V) + COOL:AIR	
	Electrical legend:	Ambient sensor			
	1089 9556 44	1	FAN WITH FILTER	**(28/11/2019 - ...)** (CAPPRM:ASME + MOVOL:380V , CAPPRM:MHLW + MOVOL:200V) + COOL:AIR	Cubicle fan
	1089 9556 72	4	AIR INLET WITHOUT FILTER	**(28/11/2019 - ...)** (CAPPRM:ASME + MOVOL:380V , CAPPRM:MHLW + MOVOL:200V) + COOL:AIR	Filter grid
	1088 0032 09	1	CONNECTOR	**(28/11/2019 - ...)** (CAPPRM:ASME + MOVOL:380V , CAPPRM:MHLW + MOVOL:200V) + COOL:AIR	X3
	1089 9572 05	1	LINE FILTER	**(28/11/2019 - ...)** (CAPPRM:ASME + MOVOL:380V , CAPPRM:MHLW + MOVOL:200V) + COOL:AIR	Z1 for 75 kw
	Electrical legend:	Z1 for 75 kw			
	1089 9562 04	1	STRAP	**(28/11/2019 - ...)** (CAPPRM:ASME + MOVOL:380V , CAPPRM:MHLW + MOVOL:200V) + COOL:AIR	HF-screen
	1089 9514 56	1	TRANSFORMER	**(28/11/2019 - ...)** (CAPPRM:ASME + MOVOL:380V , CAPPRM:MHLW + MOVOL:200V) + COOL:AIR	T1
	1089 9522 26	1	CIRCUIT BREAKER	**(28/11/2019 - ...)** (CAPPRM:ASME + MOVOL:380V , CAPPRM:MHLW + MOVOL:200V) + COOL:AIR	F1
	1089 9513 41	1	BUTTON PUSH	**(28/11/2019 - ...)** (CAPPRM:ASME + MOVOL:380V , CAPPRM:MHLW + MOVOL:200V) + COOL:AIR	S3
	1089 9513 28	1	HOLDER	**(28/11/2019 - ...)** (CAPPRM:ASME + MOVOL:380V , CAPPRM:MHLW + MOVOL:200V) + COOL:AIR	S3
	~~1089 9513 30~~	4	CONTACTOR	**(28/11/2019 - ...)** (CAPPRM:ASME + MOVOL:380V , CAPPRM:MHLW + MOVOL:200V) + COOL:AIR	S3
	Substituted by:	1089 9513 04 - CONTACT BLOCK (quantity: 1)			
	1088 0039 07	3	TERMINAL	**(28/11/2019 - ...)** (CAPPRM:ASME + MOVOL:380V , CAPPRM:MHLW + MOVOL:200V) + COOL:AIR	X152
	1088 0039 05	1	PLATE	**(28/11/2019 - ...)** (CAPPRM:ASME + MOVOL:380V , CAPPRM:MHLW + MOVOL:200V) + COOL:AIR	X152
	1088 0039 26	1	CONNECTOR	**(28/11/2019 - ...)** (CAPPRM:ASME + MOVOL:380V , CAPPRM:MHLW + MOVOL:200V) + COOL:AIR	
	Electrical legend:	X152 (remove coding pin 1,3)			
	1088 0037 99	4	PIN	**(28/11/2019 - ...)** (CAPPRM:ASME + MOVOL:380V , CAPPRM:MHLW + MOVOL:200V) + COOL:AIR	X152:1; 3
	~~1088 0031 81~~	7	END STOP BRACKET 6MM	**(28/11/2019 - ...)** (CAPPRM:ASME + MOVOL:380V , CAPPRM:MHLW + MOVOL:200V) + COOL:AIR	
	Electrical legend:	Connector/terminal rail			
	Substituted by:	1089 0577 82 - END RETAINER (quantity: 1)			
	1088 0039 38	2	TERMINAL	**(28/11/2019 - ...)** (CAPPRM:ASME + MOVOL:380V , CAPPRM:MHLW + MOVOL:200V) + COOL:AIR	1X11:2,5
	1088 0039 40	1	PLATE	**(28/11/2019 - ...)** (CAPPRM:ASME + MOVOL:380V , CAPPRM:MHLW + MOVOL:200V) + COOL:AIR	1X11
	1088 0039 34	4	TERMINAL	**(28/11/2019 - ...)** (CAPPRM:ASME + MOVOL:380V , CAPPRM:MHLW + MOVOL:200V) + COOL:AIR	
	Electrical legend:	1X11:30,301,34			

Legend:

CAPPRE:IEC - Component approval electrical:IEC
CAPPRM:ASME - Component approval mechanical:ASME
CAPPRM:MHLW - Component approval mechanical:MHLW
COOL:AIR - Cooling:Air cooled
FREQ:60HZ - Frequency:60 Hz
IDRY:Y - Integrated dryer:Yes
MODEL:GA75VP_16 - Model:GA 75VSD+
MOVOL:200V - Supply voltage:200 V
MOVOL:380V - Supply voltage:380 V

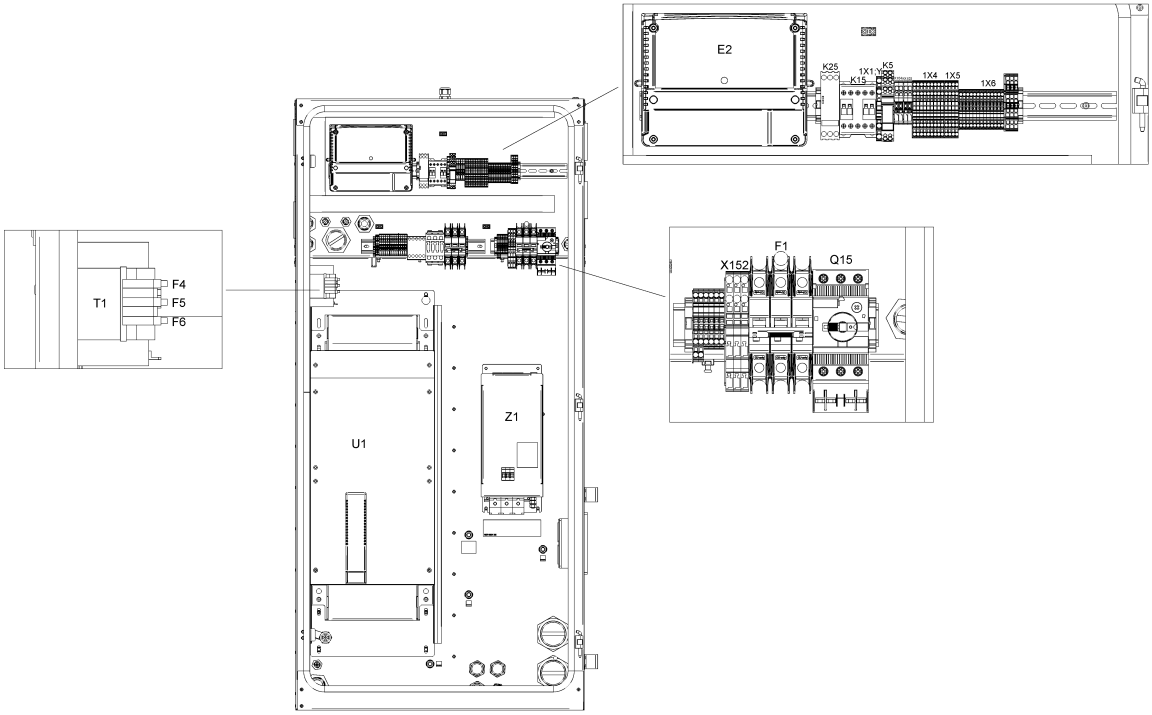
E2
K25
K15
1X1
K5
1X4
1X5
1X6
T1
F4
F5
F6
F1
X152
Q15
U1
Z1

Ref	Part Number	Qty	Name	Validity	EL
	1088 0039 35	1	PLATE	**(28/11/2019 - ...)** (CAPPRM:ASME + MOVOL:380V , CAPPRM:MHLW + MOVOL:200V) + COOL:AIR	1X11
	1088 0039 04	2	TERMINAL	**(28/11/2019 - ...)** (CAPPRM:ASME + MOVOL:380V , CAPPRM:MHLW + MOVOL:200V) + COOL:AIR	X104a
	1088 0037 99	2	PIN	**(28/11/2019 - ...)** (CAPPRM:ASME + MOVOL:380V , CAPPRM:MHLW + MOVOL:200V) + COOL:AIR	X104a/X105
	1088 0039 02	1	PLATE	**(28/11/2019 - ...)** (CAPPRM:ASME + MOVOL:380V , CAPPRM:MHLW + MOVOL:200V) + COOL:AIR	X104a
	1088 0039 07	2	TERMINAL	**(28/11/2019 - ...)** (CAPPRM:ASME + MOVOL:380V , CAPPRM:MHLW + MOVOL:200V) + COOL:AIR	X105
	1088 0039 05	1	PLATE	**(28/11/2019 - ...)** (CAPPRM:ASME + MOVOL:380V , CAPPRM:MHLW + MOVOL:200V) + COOL:AIR	X105
	1088 0039 34	13	TERMINAL	**(28/11/2019 - ...)** (CAPPRM:ASME + MOVOL:380V , CAPPRM:MHLW + MOVOL:200V) + COOL:AIR	1X6
	1088 0037 69	3	CONNECTOR	**(28/11/2019 - ...)** (CAPPRM:ASME + MOVOL:380V , CAPPRM:MHLW + MOVOL:200V) + COOL:AIR	1X7
	1088 0039 35	1	PLATE	**(28/11/2019 - ...)** (CAPPRM:ASME + MOVOL:380V , CAPPRM:MHLW + MOVOL:200V) + COOL:AIR	1X6
	1088 0040 37	1	END PLATE	**(28/11/2019 - ...)** (CAPPRM:ASME + MOVOL:380V , CAPPRM:MHLW + MOVOL:200V) + COOL:AIR	1X7
	1088 0039 36	9	TERMINAL	**(28/11/2019 - ...)** (CAPPRM:ASME + MOVOL:380V , CAPPRM:MHLW + MOVOL:200V) + COOL:AIR	1X4
	1088 0039 36	4	TERMINAL	**(28/11/2019 - ...)** (CAPPRM:ASME + MOVOL:380V , CAPPRM:MHLW + MOVOL:200V) + COOL:AIR	1X6
	1088 0039 37	1	END PLATE	**(28/11/2019 - ...)** (CAPPRM:ASME + MOVOL:380V , CAPPRM:MHLW + MOVOL:200V) + COOL:AIR	1X4
	1088 0039 37	1	END PLATE	**(28/11/2019 - ...)** (CAPPRM:ASME + MOVOL:380V , CAPPRM:MHLW + MOVOL:200V) + COOL:AIR	1X6
	1088 0039 37	1	END PLATE	**(28/11/2019 - ...)** (CAPPRM:ASME + MOVOL:380V , CAPPRM:MHLW + MOVOL:200V) + COOL:AIR	1X1:Y/D
	1088 0037 81	1	CONNECTOR	**(28/11/2019 - ...)** (CAPPRM:ASME + MOVOL:380V , CAPPRM:MHLW + MOVOL:200V) + COOL:AIR	2X27
	1088 0037 80	1	CONNECTOR	**(28/11/2019 - ...)** (CAPPRM:ASME + MOVOL:380V , CAPPRM:MHLW + MOVOL:200V) + COOL:AIR	2X28
	1088 0031 32	1	CONNECTOR	**(28/11/2019 - ...)** (CAPPRM:ASME + MOVOL:380V , CAPPRM:MHLW + MOVOL:200V) + COOL:AIR	2X30
	1088 0031 26	1	CONNECTOR 6-POLE	**(28/11/2019 - ...)** (CAPPRM:ASME + MOVOL:380V , CAPPRM:MHLW + MOVOL:200V) + COOL:AIR	2X31
	~~1089 9664 06~~	1	SWITCH	**(28/11/2019 - ...)** (CAPPRM:ASME + MOVOL:380V , CAPPRM:MHLW + MOVOL:200V) + COOL:AIR	Q15
	Substituted by:	1089 9551 97 - AUX.CONTACT CIRCUIT BREAKER (quantity: 1)			
	1089 9551 18	1	CIRCUIT BREAKER	**(28/11/2019 - ...)** (CAPPRM:ASME + MOVOL:380V , CAPPRM:MHLW + MOVOL:200V) + COOL:AIR	Q15
	1088 0038 26	1	TERMINAL	**(28/11/2019 - ...)** (CAPPRM:ASME + MOVOL:380V , CAPPRM:MHLW + MOVOL:200V) + COOL:AIR	1X1:Y/D
	1089 9602 79	1	CONTACTOR 110 V	**(28/11/2019 - ...)** (CAPPRM:ASME + MOVOL:380V , CAPPRM:MHLW + MOVOL:200V) + COOL:AIR	K15
	1089 9461 26	1	PHASE SEQUENCE RELAY	**(28/11/2019 - ...)** (CAPPRM:ASME + MOVOL:380V , CAPPRM:MHLW + MOVOL:200V) + COOL:AIR	K25

Legend:

CAPPRE:IEC - Component approval electrical:IEC
COOL:AIR - Cooling:Air cooled
MODEL:GA75VP_16 - Model:GA 75VSD+
CAPPRM:ASME - Component approval mechanical:ASME
FREQ:60HZ - Frequency:60 Hz
MOVOL:200V - Supply voltage:200 V
CAPPRM:MHLW - Component approval mechanical:MHLW
IDRY:Y - Integrated dryer:Yes
MOVOL:380V - Supply voltage:380 V

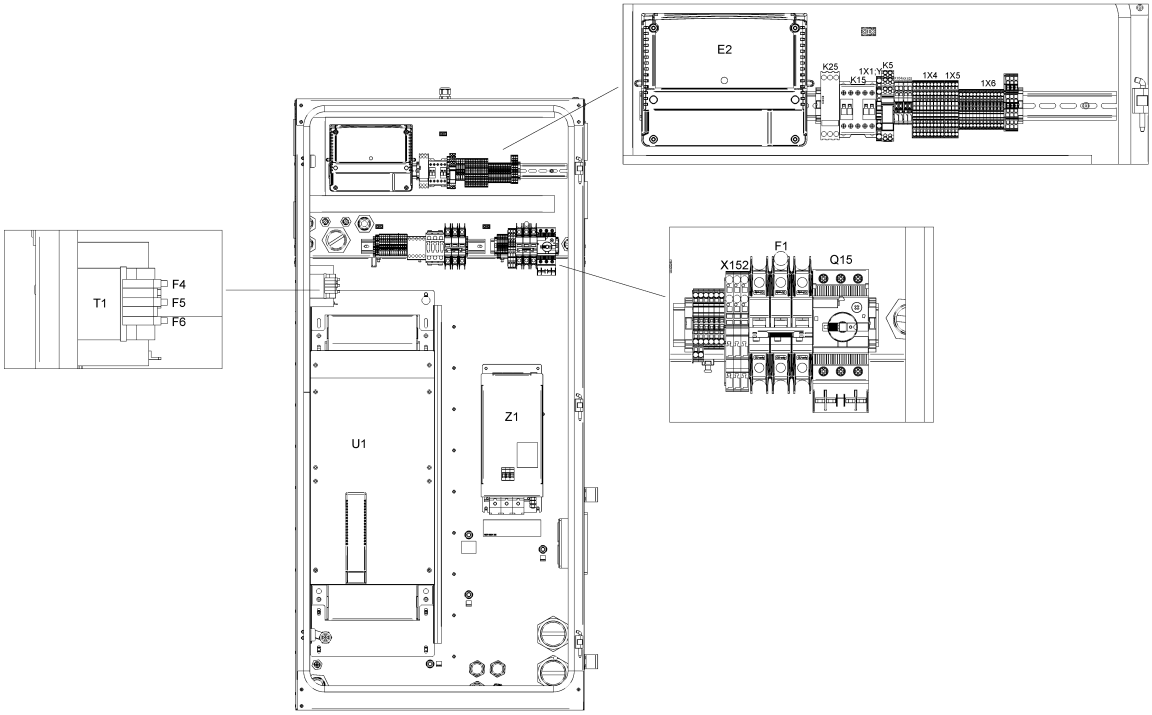
E2
K25
K15
1X1
K5
1X4
1X5
1X6
T1
F4
F5
F6
U1
Z1
F1
X152
Q15

Ref	Part Number	Qty	Name	Validity	EL
	1088 0032 17	1	RELAY 115 VAC	**(28/11/2019 - ...)** (CAPPRM:ASME + MOVOL:380V , CAPPRM:MHLW + MOVOL:200V) + COOL:AIR	K5
	0991 8011 21	AR	CABLE TRAY	**(28/11/2019 - ...)** (CAPPRM:ASME + MOVOL:380V , CAPPRM:MHLW + MOVOL:200V) + COOL:AIR	L=1384mm
	1900 2203 02	1	DRYER RAIL	**(28/11/2019 - ...)** (CAPPRM:ASME + MOVOL:380V , CAPPRM:MHLW + MOVOL:200V) + COOL:AIR	
	Electrical legend:	Without trafo on dryer			
	1088 0031 13	1	CONNECTOR 13-POLE	**(28/11/2019 - ...)** (CAPPRM:ASME + MOVOL:380V , CAPPRM:MHLW + MOVOL:200V) + COOL:AIR	1X30
	1088 0037 82	1	CONNECTOR	**(28/11/2019 - ...)** (CAPPRM:ASME + MOVOL:380V , CAPPRM:MHLW + MOVOL:200V) + COOL:AIR	3X34
	0697 9811 13	1	PLUG	**(28/11/2019 - ...)** (CAPPRM:ASME + MOVOL:380V , CAPPRM:MHLW + MOVOL:200V) + COOL:AIR	
	Electrical legend:	Energy recovery			
	0989 3700 44	1	LOCKNUT	**(28/11/2019 - ...)** (CAPPRM:ASME + MOVOL:380V , CAPPRM:MHLW + MOVOL:200V) + COOL:AIR	
	Electrical legend:	Energy recovery			
	0697 9811 12	1	PLUG	**(28/11/2019 - ...)** (CAPPRM:ASME + MOVOL:380V , CAPPRM:MHLW + MOVOL:200V) + COOL:AIR	
	Electrical legend:	Control circuit of T10			
	0989 3700 43	1	NUT	**(28/11/2019 - ...)** (CAPPRM:ASME + MOVOL:380V , CAPPRM:MHLW + MOVOL:200V) + COOL:AIR	
	Electrical legend:	Control circuit of T10			
	0697 9811 10	1	PLUG	**(28/11/2019 - ...)** (CAPPRM:ASME + MOVOL:380V , CAPPRM:MHLW + MOVOL:200V) + COOL:AIR	
	Electrical legend:	Plug for smartbox hole			
	0989 3700 41	1	LOCKNUT	**(28/11/2019 - ...)** (CAPPRM:ASME + MOVOL:380V , CAPPRM:MHLW + MOVOL:200V) + COOL:AIR	
	Electrical legend:	Nut for smartbox hole			
	1089 9556 37	1	AIR INLET WITH FILTER	**(28/11/2019 - ...)** (CAPPRM:ASME + MOVOL:380V , CAPPRM:MHLW + MOVOL:200V) + COOL:AIR	Fan Filter

Legend:

CAPPRE:IEC - Component approval electrical:IEC
CAPPRM:ASME - Component approval mechanical:ASME
CAPPRM:MHLW - Component approval mechanical:MHLW
COOL:AIR - Cooling:Air cooled
FREQ:60HZ - Frequency:60 Hz
IDRY:Y - Integrated dryer:Yes
MODEL:GA75VP_16 - Model:GA 75VSD+
MOVOL:200V - Supply voltage:200 V
MOVOL:380V - Supply voltage:380 V

21.14 - Cubicle components GA 90 VSD+ - (200V-380V-460V/60Hz - IEC, 230V-460V-575V/60Hz - UL-cUL, 200V-400V-500V/50Hz - IEC) - Pack (20/07/2017 - 11/12/2018)

((((CAPPRM:AS1210 , CAPPRM:CE , CAPPRM:MHLW , CAPPRM:MOM) + MOVOL:400V , CAPPRM:CE + COOL:AIR + MOVOL:500V) + FREQ:50HZ , ((MOVOL:380V , MOVOL:460V) + CAPPRM:ASME , CAPPRM:MHLW + MOVOL:460V) + FREQ:60HZ , CAPPRM:MHLW + COOL:AIR + MOVOL:200V) + CAPPRE:IEC , ((MOVOL:230V , MOVOL:575V) + COOL:AIR , MOVOL:460V) + CAPPRE:ULCUL + CAPPRM:ASME + FREQ:60HZ) + IDRY:N + MODEL:GA90VP_16

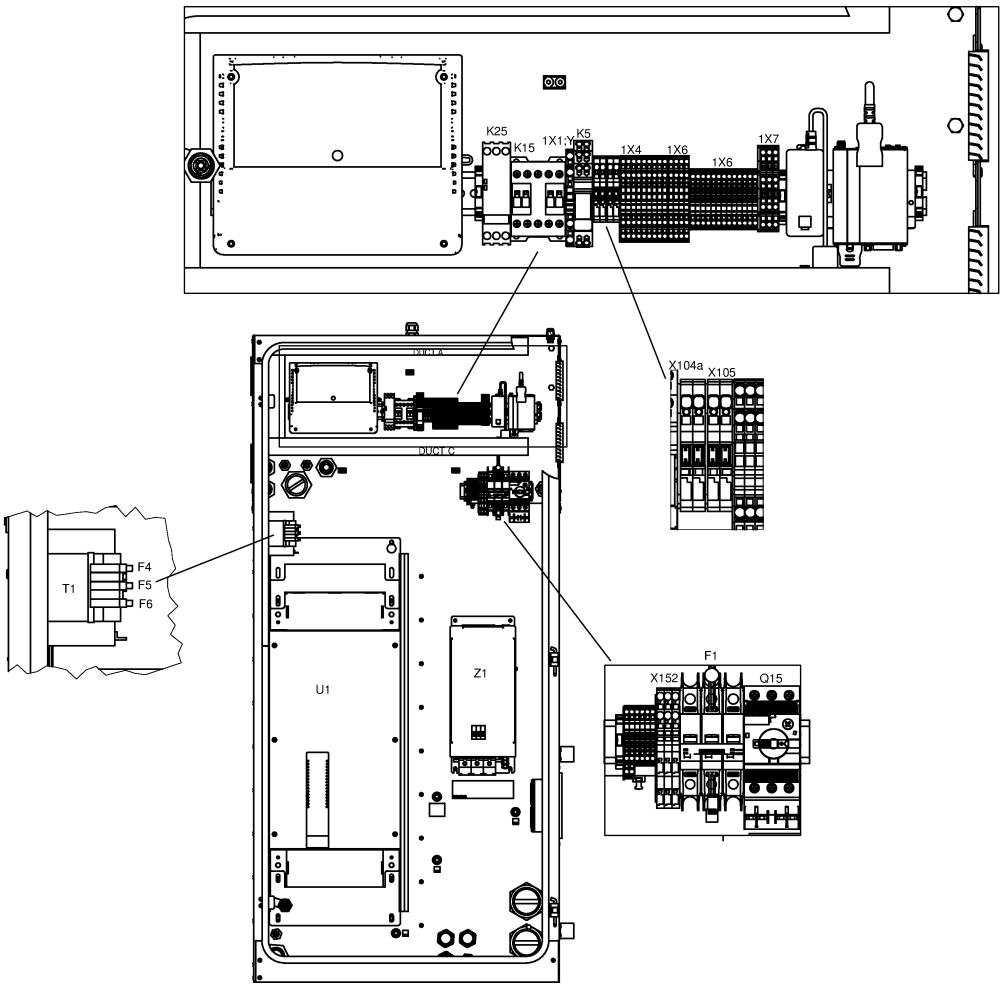

21.14 - Cubicle components GA 90 VSD+ - (200V-380V-460V/60Hz - IEC, 230V-460V-575V/60Hz - UL-cUL, 200V-400V-500V/50Hz - IEC) - Pack (20/07/2017 - 11/12/2018)

((((CAPPRM:AS1210 , CAPPRM:CE , CAPPRM:MHLW , CAPPRM:MOM) + MOVOL:400V , CAPPRM:CE + COOL:AIR + MOVOL:500V) + FREQ:50HZ , ((MOVOL:380V , MOVOL:460V) + CAPPRM:ASME , CAPPRM:MHLW + MOVOL:460V) + FREQ:60HZ , CAPPRM:MHLW + COOL:AIR + MOVOL:200V) + CAPPRE:IEC , ((MOVOL:230V , MOVOL:575V) + COOL:AIR , MOVOL:460V) + CAPPRE:ULCUL + CAPPRM:ASME + FREQ:60HZ) + IDRY:N + MODEL:GA90VP_16

Ref	Part Number	Qty	Name	Validity	EL
	1900 2202 07	1	CUBICLE	**(20/07/2017 - 11/12/2018)**	
	9820 3000 21	-	CUBICLE LAYOUT	**(20/07/2017 - 20/08/2018)** ((((CAPPRM:AS1210 , CAPPRM:CE , CAPPRM:MHLW , CAPPRM:MOM) + MOVOL:400V , CAPPRM:CE + MOVOL:500V , CAPPRM:MHLW + MOVOL:200V) + FREQ:50HZ , ((MOVOL:200V , MOVOL:460V) + CAPPRM:MHLW , (MOVOL:380V , MOVOL:460V) + CAPPRM:ASME) + FREQ:60HZ) + CAPPRE:IEC , (MOVOL:230V , MOVOL:460V , MOVOL:575V) + CAPPRE:ULCUL + CAPPRM:ASME + FREQ:60HZ) + COOL:AIR **(21/08/2018 - 11/12/2018)**	-
	9820 3000 22	-	SERVICE DIAGRAM	**(20/07/2017 - 20/08/2018)** ((((CAPPRM:AS1210 , CAPPRM:CE , CAPPRM:MHLW , CAPPRM:MOM) + MOVOL:400V , CAPPRM:CE + MOVOL:500V , CAPPRM:MHLW + MOVOL:200V) + FREQ:50HZ , ((MOVOL:200V , MOVOL:460V) + CAPPRM:MHLW , (MOVOL:380V , MOVOL:460V) + CAPPRM:ASME) + FREQ:60HZ) + CAPPRE:IEC , (MOVOL:230V , MOVOL:460V , MOVOL:575V) + CAPPRE:ULCUL + CAPPRM:ASME + FREQ:60HZ) + COOL:AIR **(21/08/2018 - 11/12/2018)**	-
	1622 3798 70	1	WIRE HARNESS COMM CABLE	**(20/07/2017 - 20/08/2018)** ((((CAPPRM:AS1210 , CAPPRM:CE , CAPPRM:MHLW , CAPPRM:MOM) + MOVOL:400V , CAPPRM:CE + MOVOL:500V , CAPPRM:MHLW + MOVOL:200V) + FREQ:50HZ , ((MOVOL:200V , MOVOL:460V) + CAPPRM:MHLW , (MOVOL:380V , MOVOL:460V) + CAPPRM:ASME) + FREQ:60HZ) + CAPPRE:IEC , (MOVOL:230V , MOVOL:460V , MOVOL:575V) + CAPPRE:ULCUL + CAPPRM:ASME + FREQ:60HZ) + COOL:AIR **(21/08/2018 - 11/12/2018)**	-
	1622 5099 04	1	DI CHANE CABLE (1400MM)	**(20/07/2017 - 20/08/2018)** ((((CAPPRM:AS1210 , CAPPRM:CE , CAPPRM:MHLW , CAPPRM:MOM) + MOVOL:400V , CAPPRM:CE + MOVOL:500V , CAPPRM:MHLW + MOVOL:200V) + FREQ:50HZ , ((MOVOL:200V , MOVOL:460V) + CAPPRM:MHLW , (MOVOL:380V , MOVOL:460V) + CAPPRM:ASME) + FREQ:60HZ) + CAPPRE:IEC , (MOVOL:230V , MOVOL:460V , MOVOL:575V) + CAPPRE:ULCUL + CAPPRM:ASME + FREQ:60HZ) + COOL:AIR **(21/08/2018 - 11/12/2018)**	
	Electrical legend:	Comm Cable Loose supply			
	1649 8001 22	1	CUBICLE	**(20/07/2017 - 20/08/2018)** ((((CAPPRM:AS1210 , CAPPRM:CE , CAPPRM:MHLW , CAPPRM:MOM) + MOVOL:400V , CAPPRM:CE + MOVOL:500V , CAPPRM:MHLW + MOVOL:200V) + FREQ:50HZ , ((MOVOL:200V , MOVOL:460V) + CAPPRM:MHLW , (MOVOL:380V , MOVOL:460V) + CAPPRM:ASME) + FREQ:60HZ) + CAPPRE:IEC , (MOVOL:230V , MOVOL:460V , MOVOL:575V) + CAPPRE:ULCUL + CAPPRM:ASME + FREQ:60HZ) + COOL:AIR **(21/08/2018 - 11/12/2018)**	-
•	1202 6584 02	AR	SEAL		-

Legend:

CAPPRE:IEC - Component approval electrical:IEC
CAPPRE:ULCUL - Component approval electrical:UL/cUL
CAPPRM:AS1210 - Component approval mechanical:AS1210
CAPPRM:ASME - Component approval mechanical:ASME
CAPPRM:CE - Component approval mechanical:CE
CAPPRM:MHLW - Component approval mechanical:MHLW
CAPPRM:MOM - Component approval mechanical:MOM
COOL:AIR - Cooling:Air cooled
FREQ:50HZ - Frequency:50 Hz
FREQ:60HZ - Frequency:60 Hz
IDRY:N - Integrated dryer:No
MODEL:GA90VP_16 - Model:GA 90VSD+
MOVOL:200V - Supply voltage:200 V
MOVOL:230V - Supply voltage:230 V
MOVOL:380V - Supply voltage:380 V
MOVOL:400V - Supply voltage:400 V
MOVOL:460V - Supply voltage:460 V
MOVOL:500V - Supply voltage:500 V
MOVOL:575V - Supply voltage:575 V

21.14 - Cubicle components GA 90 VSD+ - (200V-380V-460V/60Hz - IEC, 230V-460V-575V/60Hz - UL-cUL, 200V-400V-500V/50Hz - IEC) - Pack (20/07/2017 - 11/12/2018)

((((CAPPRM:AS1210 , CAPPRM:CE , CAPPRM:MHLW , CAPPRM:MOM) + MOVOL:400V , CAPPRM:CE + COOL:AIR + MOVOL:500V) + FREQ:50HZ , ((MOVOL:380V , MOVOL:460V) + CAPPRM:ASME , CAPPRM:MHLW + MOVOL:460V) + FREQ:60HZ , CAPPRM:MHLW + COOL:AIR + MOVOL:200V) + CAPPRE:IEC , ((MOVOL:230V , MOVOL:575V) + COOL:AIR , MOVOL:460V) + CAPPRE:ULCUL + CAPPRM:ASME + FREQ:60HZ) + IDRY:N + MODEL:GA90VP_16

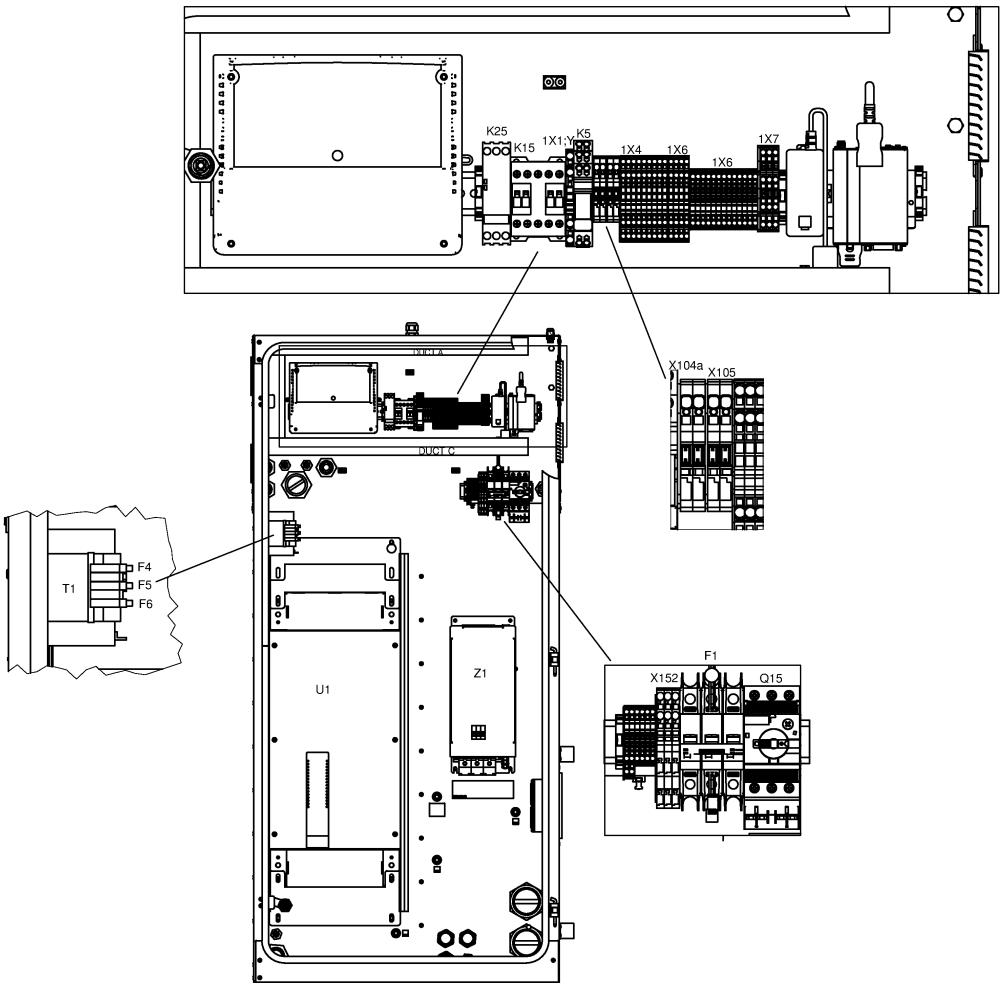

21.14 - Cubicle components GA 90 VSD+ - (200V-380V-460V/60Hz - IEC, 230V-460V-575V/60Hz - UL-cUL, 200V-400V-500V/50Hz - IEC) - Pack (20/07/2017 - 11/12/2018)

((((CAPPRM:AS1210 , CAPPRM:CE , CAPPRM:MHLW , CAPPRM:MOM) + MOVOL:400V , CAPPRM:CE + COOL:AIR + MOVOL:500V) + FREQ:50HZ , ((MOVOL:380V , MOVOL:460V) + CAPPRM:ASME , CAPPRM:MHLW + MOVOL:460V) + FREQ:60HZ , CAPPRM:MHLW + COOL:AIR + MOVOL:200V) + CAPPRE:IEC , ((MOVOL:230V , MOVOL:575V) + COOL:AIR , MOVOL:460V) + CAPPRE:ULCUL + CAPPRM:ASME + FREQ:60HZ) + IDRY:N + MODEL:GA90VP_16

Ref	Part Number	Qty	Name	Validity	EL
	1649 8001 32	2	PLATE NEOS "D"	**(20/07/2017 - 20/08/2018)** ((((CAPPRM:AS1210 , CAPPRM:CE , CAPPRM:MHLW , CAPPRM:MOM) + MOVOL:400V , CAPPRM:CE + MOVOL:500V , CAPPRM:MHLW + MOVOL:200V) + FREQ:50HZ , ((MOVOL:200V , MOVOL:460V) + CAPPRM:MHLW , (MOVOL:380V , MOVOL:460V) + CAPPRM:ASME) + FREQ:60HZ) + CAPPRE:IEC , (MOVOL:230V , MOVOL:460V , MOVOL:575V) + CAPPRE:ULCUL + CAPPRM:ASME + FREQ:60HZ) + COOL:AIR **(21/08/2018 - 11/12/2018)**	
	1649 8003 85	1	MOUNTING PLATE	**(20/07/2017 - 20/08/2018)** ((((CAPPRM:AS1210 , CAPPRM:CE , CAPPRM:MHLW , CAPPRM:MOM) + MOVOL:400V , CAPPRM:CE + MOVOL:500V , CAPPRM:MHLW + MOVOL:200V) + FREQ:50HZ , ((MOVOL:200V , MOVOL:460V) + CAPPRM:MHLW , (MOVOL:380V , MOVOL:460V) + CAPPRM:ASME) + FREQ:60HZ) + CAPPRE:IEC , (MOVOL:230V , MOVOL:460V , MOVOL:575V) + CAPPRE:ULCUL + CAPPRM:ASME + FREQ:60HZ) + COOL:AIR **(21/08/2018 - 11/12/2018)**	
	1649 8002 39	1	WIRE HARNESS	**(20/07/2017 - 20/08/2018)** ((((CAPPRM:AS1210 , CAPPRM:CE , CAPPRM:MHLW , CAPPRM:MOM) + MOVOL:400V , CAPPRM:CE + MOVOL:500V , CAPPRM:MHLW + MOVOL:200V) + FREQ:50HZ , ((MOVOL:200V , MOVOL:460V) + CAPPRM:MHLW , (MOVOL:380V , MOVOL:460V) + CAPPRM:ASME) + FREQ:60HZ) + CAPPRE:IEC , (MOVOL:230V , MOVOL:460V , MOVOL:575V) + CAPPRE:ULCUL + CAPPRM:ASME + FREQ:60HZ) + COOL:AIR **(21/08/2018 - 11/12/2018)**	
	Electrical legend:	Pressure switch (vessel) + pressure sensor vessel + pressure sensor outlet			
•	0698 5140 74	1	CABLE GLAND		
	1649 8002 40	1	WIRE HARNESS	**(20/07/2017 - 20/08/2018)** ((((CAPPRM:AS1210 , CAPPRM:CE , CAPPRM:MHLW , CAPPRM:MOM) + MOVOL:400V , CAPPRM:CE + MOVOL:500V , CAPPRM:MHLW + MOVOL:200V) + FREQ:50HZ , ((MOVOL:200V , MOVOL:460V) + CAPPRM:MHLW , (MOVOL:380V , MOVOL:460V) + CAPPRM:ASME) + FREQ:60HZ) + CAPPRE:IEC , (MOVOL:230V , MOVOL:460V , MOVOL:575V) + CAPPRE:ULCUL + CAPPRM:ASME + FREQ:60HZ) + COOL:AIR **(21/08/2018 - 11/12/2018)**	
	Electrical legend:	Temperature sensor element outlet + solenoids + ambient sensor			
•	0698 5140 74	1	CABLE GLAND		
	1649 8002 73	1	WIRE HARNESS	**(20/07/2017 - 20/08/2018)** ((((CAPPRM:AS1210 , CAPPRM:CE , CAPPRM:MHLW , CAPPRM:MOM) + MOVOL:400V , CAPPRM:CE + MOVOL:500V , CAPPRM:MHLW + MOVOL:200V) + FREQ:50HZ , ((MOVOL:200V , MOVOL:460V) + CAPPRM:MHLW , (MOVOL:380V , MOVOL:460V) + CAPPRM:ASME) + FREQ:60HZ) + CAPPRE:IEC , (MOVOL:230V , MOVOL:460V , MOVOL:575V) + CAPPRE:ULCUL + CAPPRM:ASME + FREQ:60HZ) + COOL:AIR **(21/08/2018 - 11/12/2018)**	
	Electrical legend:	Pack Drain + Air filter switch			
•	0698 5140 74	1	CABLE GLAND		

Legend:

CAPPRE:IEC - Component approval electrical:IEC
CAPPRE:ULCUL - Component approval electrical:UL/cUL
CAPPRM:AS1210 - Component approval mechanical:AS1210
CAPPRM:ASME - Component approval mechanical:ASME
CAPPRM:CE - Component approval mechanical:CE
CAPPRM:MHLW - Component approval mechanical:MHLW
CAPPRM:MOM - Component approval mechanical:MOM
COOL:AIR - Cooling:Air cooled
FREQ:50HZ - Frequency:50 Hz
FREQ:60HZ - Frequency:60 Hz
IDRY:N - Integrated dryer:No
MODEL:GA90VP_16 - Model:GA 90VSD+
MOVOL:200V - Supply voltage:200 V
MOVOL:230V - Supply voltage:230 V
MOVOL:380V - Supply voltage:380 V
MOVOL:400V - Supply voltage:400 V
MOVOL:460V - Supply voltage:460 V
MOVOL:500V - Supply voltage:500 V
MOVOL:575V - Supply voltage:575 V

21.14 - Cubicle components GA 90 VSD+ - (200V-380V-460V/60Hz - IEC, 230V-460V-575V/60Hz - UL-cUL, 200V-400V-500V/50Hz - IEC) - Pack (20/07/2017 - 11/12/2018)

((((CAPPRM:AS1210 , CAPPRM:CE , CAPPRM:MHLW , CAPPRM:MOM) + MOVOL:400V , CAPPRM:CE + COOL:AIR + MOVOL:500V) + FREQ:50HZ , ((MOVOL:380V , MOVOL:460V) + CAPPRM:ASME , CAPPRM:MHLW + MOVOL:460V) + FREQ:60HZ , CAPPRM:MHLW + COOL:AIR + MOVOL:200V) + CAPPRE:IEC , ((MOVOL:230V , MOVOL:575V) + COOL:AIR , MOVOL:460V) + CAPPRE:ULCUL + CAPPRM:ASME + FREQ:60HZ) + IDRY:N + MODEL:GA90VP_16

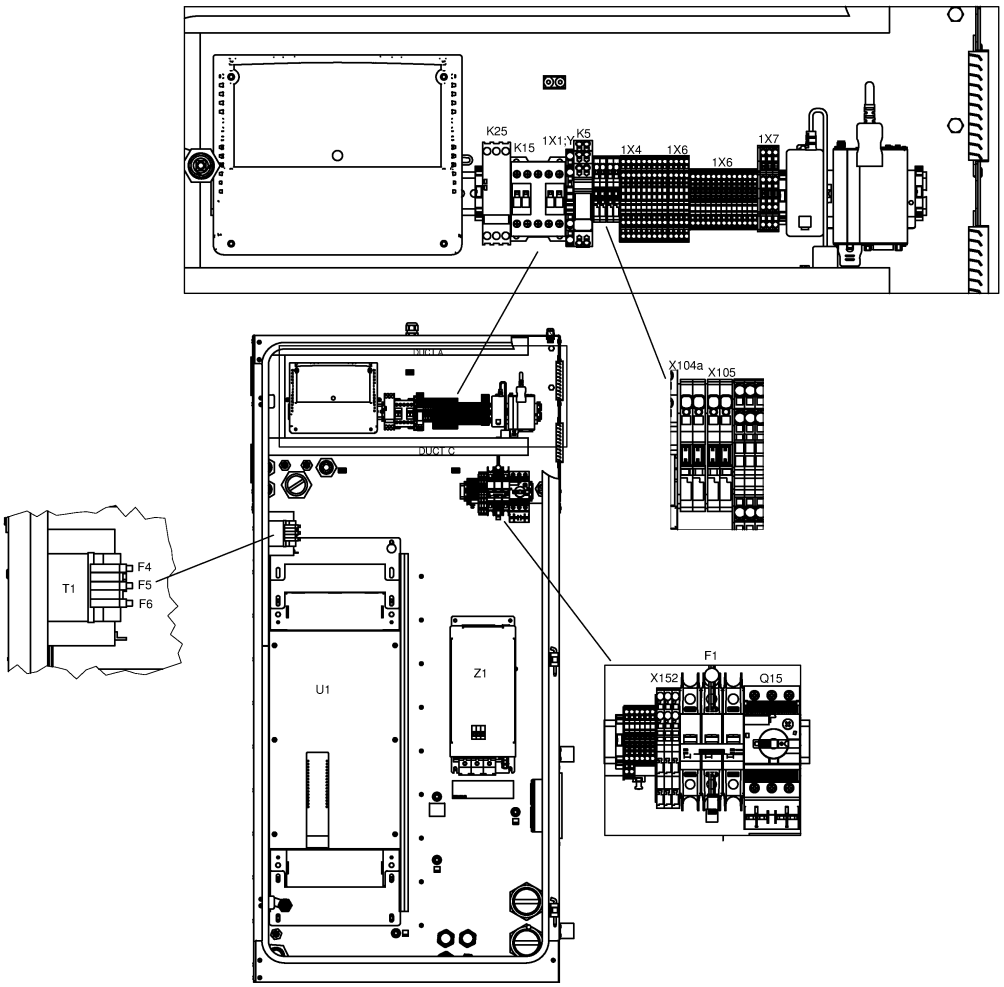

Ref	Part Number	Qty	Name	Validity	EL
	1649 8002 75	1	WIRE HARNESS	**(20/07/2017 - 20/08/2018)** ((((CAPPRM:AS1210 , CAPPRM:CE , CAPPRM:MHLW , CAPPRM:MOM) + MOVOL:400V , CAPPRM:CE + MOVOL:500V , CAPPRM:MHLW + MOVOL:200V) + FREQ:50HZ , ((MOVOL:200V , MOVOL:460V) + CAPPRM:MHLW , (MOVOL:380V , MOVOL:460V) + CAPPRM:ASME) + FREQ:60HZ) + CAPPRE:IEC , (MOVOL:230V , MOVOL:460V , MOVOL:575V) + CAPPRE:ULCUL + CAPPRM:ASME + FREQ:60HZ) + COOL:AIR **(21/08/2018 - 11/12/2018)**	
	Electrical legend:	Relative Humidity sensor			
•	~~1089 9320 09~~	1	RH SENSOR		
	Substituted by:	1089 9320 10 - TEMP. SENSOR (quantity: 1)			
•	0698 5140 75	1	CABLE GLAND		
	1649 8001 44	3	MOTOR CABLE	**(20/07/2017 - 20/08/2018)** ((((CAPPRM:AS1210 , CAPPRM:CE , CAPPRM:MHLW , CAPPRM:MOM) + MOVOL:400V , CAPPRM:CE + MOVOL:500V , CAPPRM:MHLW + MOVOL:200V) + FREQ:50HZ , ((MOVOL:200V , MOVOL:460V) + CAPPRM:MHLW , (MOVOL:380V , MOVOL:460V) + CAPPRM:ASME) + FREQ:60HZ) + CAPPRE:IEC , (MOVOL:230V , MOVOL:460V , MOVOL:575V) + CAPPRE:ULCUL + CAPPRM:ASME + FREQ:60HZ) + COOL:AIR **(21/08/2018 - 11/12/2018)**	
	1649 8001 47	1	MOTOR CABLE	**(20/07/2017 - 20/08/2018)** ((((CAPPRM:AS1210 , CAPPRM:CE , CAPPRM:MHLW , CAPPRM:MOM) + MOVOL:400V , CAPPRM:CE + MOVOL:500V , CAPPRM:MHLW + MOVOL:200V) + FREQ:50HZ , ((MOVOL:200V , MOVOL:460V) + CAPPRM:MHLW , (MOVOL:380V , MOVOL:460V) + CAPPRM:ASME) + FREQ:60HZ) + CAPPRE:IEC , (MOVOL:230V , MOVOL:460V , MOVOL:575V) + CAPPRE:ULCUL + CAPPRM:ASME + FREQ:60HZ) + COOL:AIR **(21/08/2018 - 11/12/2018)**	
		1	DATA LABEL	**(20/07/2017 - 01/02/2018)** ((((CAPPRM:AS1210 , CAPPRM:CE , CAPPRM:MHLW , CAPPRM:MOM) + MOVOL:400V , CAPPRM:CE + MOVOL:500V , CAPPRM:MHLW + MOVOL:200V) + FREQ:50HZ , ((MOVOL:200V , MOVOL:460V) + CAPPRM:MHLW , (MOVOL:380V , MOVOL:460V) + CAPPRM:ASME) + FREQ:60HZ) + CAPPRE:IEC , (MOVOL:230V , MOVOL:460V , MOVOL:575V) + CAPPRE:ULCUL + CAPPRM:ASME + FREQ:60HZ) + COOL:AIR	
		1	DATA LABEL	**(02/02/2018 - 20/08/2018)** ((((CAPPRM:AS1210 , CAPPRM:CE , CAPPRM:MHLW , CAPPRM:MOM) + MOVOL:400V , CAPPRM:CE + MOVOL:500V , CAPPRM:MHLW + MOVOL:200V) + FREQ:50HZ , ((MOVOL:200V , MOVOL:460V) + CAPPRM:MHLW , (MOVOL:380V , MOVOL:460V) + CAPPRM:ASME) + FREQ:60HZ) + CAPPRE:IEC , (MOVOL:230V , MOVOL:460V , MOVOL:575V) + CAPPRE:ULCUL + CAPPRM:ASME + FREQ:60HZ) + COOL:AIR **(21/08/2018 - 11/12/2018)**	

Legend:

CAPPRE:IEC - Component approval electrical:IEC
CAPPRE:ULCUL - Component approval electrical:UL/cUL
CAPPRM:AS1210 - Component approval mechanical:AS1210
CAPPRM:ASME - Component approval mechanical:ASME
CAPPRM:CE - Component approval mechanical:CE
CAPPRM:MHLW - Component approval mechanical:MHLW
CAPPRM:MOM - Component approval mechanical:MOM
COOL:AIR - Cooling:Air cooled
FREQ:50HZ - Frequency:50 Hz
FREQ:60HZ - Frequency:60 Hz
IDRY:N - Integrated dryer:No
MODEL:GA90VP_16 - Model:GA 90VSD+
MOVOL:200V - Supply voltage:200 V
MOVOL:230V - Supply voltage:230 V
MOVOL:380V - Supply voltage:380 V
MOVOL:400V - Supply voltage:400 V
MOVOL:460V - Supply voltage:460 V
MOVOL:500V - Supply voltage:500 V
MOVOL:575V - Supply voltage:575 V

21.14 - Cubicle components GA 90 VSD+ - (200V-380V-460V/60Hz - IEC, 230V-460V-575V/60Hz - UL-cUL, 200V-400V-500V/50Hz - IEC) - Pack (20/07/2017 - 11/12/2018)

((((CAPPRM:AS1210 , CAPPRM:CE , CAPPRM:MHLW , CAPPRM:MOM) + MOVOL:400V , CAPPRM:CE + COOL:AIR + MOVOL:500V) + FREQ:50HZ , ((MOVOL:380V , MOVOL:460V) + CAPPRM:ASME , CAPPRM:MHLW + MOVOL:460V) + FREQ:60HZ , CAPPRM:MHLW + COOL:AIR + MOVOL:200V) + CAPPRE:IEC , ((MOVOL:230V , MOVOL:575V) + COOL:AIR , MOVOL:460V) + CAPPRE:ULCUL + CAPPRM:ASME + FREQ:60HZ) + IDRY:N + MODEL:GA90VP_16

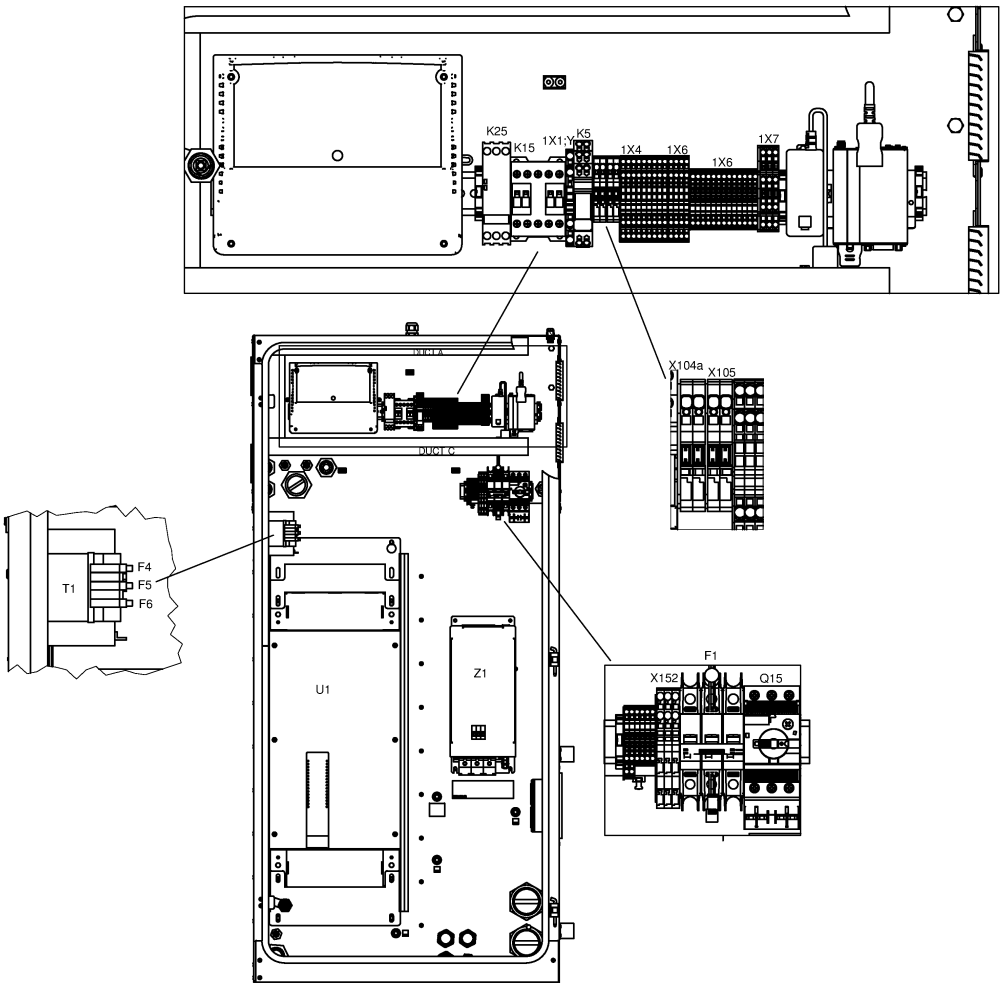

21.14 - Cubicle components GA 90 VSD+ - (200V-380V-460V/60Hz - IEC, 230V-460V-575V/60Hz - UL-cUL, 200V-400V-500V/50Hz - IEC) - Pack (20/07/2017 - 11/12/2018)

((((CAPPRM:AS1210 , CAPPRM:CE , CAPPRM:MHLW , CAPPRM:MOM) + MOVOL:400V , CAPPRM:CE + COOL:AIR + MOVOL:500V) + FREQ:50HZ , ((MOVOL:380V , MOVOL:460V) + CAPPRM:ASME , CAPPRM:MHLW + MOVOL:460V) + FREQ:60HZ , CAPPRM:MHLW + COOL:AIR + MOVOL:200V) + CAPPRE:IEC , ((MOVOL:230V , MOVOL:575V) + COOL:AIR , MOVOL:460V) + CAPPRE:ULCUL + CAPPRM:ASME + FREQ:60HZ) + IDRY:N + MODEL:GA90VP_16

Ref	Part Number	Qty	Name	Validity	EL
	1079 9901 68	1	WARNING LABEL	**(20/07/2017 - 20/08/2018)** ((((CAPPRM:AS1210 , CAPPRM:CE , CAPPRM:MHLW , CAPPRM:MOM) + MOVOL:400V , CAPPRM:CE + MOVOL:500V , CAPPRM:MHLW + MOVOL:200V) + FREQ:50HZ , ((MOVOL:200V , MOVOL:460V) + CAPPRM:MHLW , (MOVOL:380V , MOVOL:460V) + CAPPRM:ASME) + FREQ:60HZ) + CAPPRE:IEC , (MOVOL:230V , MOVOL:460V , MOVOL:575V) + CAPPRE:ULCUL + CAPPRM:ASME + FREQ:60HZ) + COOL:AIR **(21/08/2018 - 11/12/2018)**	-
	1900 5350 14	1	INVERTER	**(20/07/2017 - 20/08/2018)** ((((CAPPRM:AS1210 , CAPPRM:CE , CAPPRM:MHLW , CAPPRM:MOM) + MOVOL:400V , CAPPRM:CE + MOVOL:500V , CAPPRM:MHLW + MOVOL:200V) + FREQ:50HZ , ((MOVOL:200V , MOVOL:460V) + CAPPRM:MHLW , (MOVOL:380V , MOVOL:460V) + CAPPRM:ASME) + FREQ:60HZ) + CAPPRE:IEC , (MOVOL:230V , MOVOL:460V , MOVOL:575V) + CAPPRE:ULCUL + CAPPRM:ASME + FREQ:60HZ) + COOL:AIR **(21/08/2018 - 11/12/2018)**	U1
	1631 2079 00	1	NANOPERMRING	**(20/07/2017 - 20/08/2018)** ((((CAPPRM:AS1210 , CAPPRM:CE , CAPPRM:MHLW , CAPPRM:MOM) + MOVOL:400V , CAPPRM:CE + MOVOL:500V , CAPPRM:MHLW + MOVOL:200V) + FREQ:50HZ , ((MOVOL:200V , MOVOL:460V) + CAPPRM:MHLW , (MOVOL:380V , MOVOL:460V) + CAPPRM:ASME) + FREQ:60HZ) + CAPPRE:IEC , (MOVOL:230V , MOVOL:460V , MOVOL:575V) + CAPPRE:ULCUL + CAPPRM:ASME + FREQ:60HZ) + COOL:AIR **(21/08/2018 - 11/12/2018)**	-
	0697 9811 17	2	PLUG	**(20/07/2017 - 20/08/2018)** ((((CAPPRM:AS1210 , CAPPRM:CE , CAPPRM:MHLW , CAPPRM:MOM) + MOVOL:400V , CAPPRM:CE + MOVOL:500V , CAPPRM:MHLW + MOVOL:200V) + FREQ:50HZ , ((MOVOL:200V , MOVOL:460V) + CAPPRM:MHLW , (MOVOL:380V , MOVOL:460V) + CAPPRM:ASME) + FREQ:60HZ) + CAPPRE:IEC , (MOVOL:230V , MOVOL:460V , MOVOL:575V) + CAPPRE:ULCUL + CAPPRM:ASME + FREQ:60HZ) + COOL:AIR **(21/08/2018 - 11/12/2018)**	
	Electrical legend:	Plug for transfo supply			
	0989 3700 48	2	NUT	**(20/07/2017 - 20/08/2018)** ((((CAPPRM:AS1210 , CAPPRM:CE , CAPPRM:MHLW , CAPPRM:MOM) + MOVOL:400V , CAPPRM:CE + MOVOL:500V , CAPPRM:MHLW + MOVOL:200V) + FREQ:50HZ , ((MOVOL:200V , MOVOL:460V) + CAPPRM:MHLW , (MOVOL:380V , MOVOL:460V) + CAPPRM:ASME) + FREQ:60HZ) + CAPPRE:IEC , (MOVOL:230V , MOVOL:460V , MOVOL:575V) + CAPPRE:ULCUL + CAPPRM:ASME + FREQ:60HZ) + COOL:AIR **(21/08/2018 - 11/12/2018)**	
	Electrical legend:	Nut for transfo supply			
	0698 5140 72	1	CABLE GLAND	**(20/07/2017 - 20/08/2018)** ((((CAPPRM:AS1210 , CAPPRM:CE , CAPPRM:MHLW , CAPPRM:MOM) + MOVOL:400V , CAPPRM:CE + MOVOL:500V , CAPPRM:MHLW + MOVOL:200V) + FREQ:50HZ , ((MOVOL:200V , MOVOL:460V) + CAPPRM:MHLW , (MOVOL:380V , MOVOL:460V) + CAPPRM:ASME) + FREQ:60HZ) + CAPPRE:IEC , (MOVOL:230V , MOVOL:460V , MOVOL:575V) + CAPPRE:ULCUL + CAPPRM:ASME + FREQ:60HZ) + COOL:AIR **(21/08/2018 - 11/12/2018)**	Fan

Legend:

CAPPRE:IEC - Component approval electrical:IEC
CAPPRE:ULCUL - Component approval electrical:UL/cUL
CAPPRM:AS1210 - Component approval mechanical:AS1210
CAPPRM:ASME - Component approval mechanical:ASME
CAPPRM:CE - Component approval mechanical:CE
CAPPRM:MHLW - Component approval mechanical:MHLW
CAPPRM:MOM - Component approval mechanical:MOM
COOL:AIR - Cooling:Air cooled
FREQ:50HZ - Frequency:50 Hz
FREQ:60HZ - Frequency:60 Hz
IDRY:N - Integrated dryer:No
MODEL:GA90VP_16 - Model:GA 90VSD+
MOVOL:200V - Supply voltage:200 V
MOVOL:230V - Supply voltage:230 V
MOVOL:380V - Supply voltage:380 V
MOVOL:400V - Supply voltage:400 V
MOVOL:460V - Supply voltage:460 V
MOVOL:500V - Supply voltage:500 V
MOVOL:575V - Supply voltage:575 V

21.14 - Cubicle components GA 90 VSD+ - (200V-380V-460V/60Hz - IEC, 230V-460V-575V/60Hz - UL-cUL, 200V-400V-500V/50Hz - IEC) - Pack (20/07/2017 - 11/12/2018)

((((CAPPRM:AS1210 , CAPPRM:CE , CAPPRM:MHLW , CAPPRM:MOM) + MOVOL:400V , CAPPRM:CE + COOL:AIR + MOVOL:500V) + FREQ:50HZ , ((MOVOL:380V , MOVOL:460V) + CAPPRM:ASME , CAPPRM:MHLW + MOVOL:460V) + FREQ:60HZ , CAPPRM:MHLW + COOL:AIR + MOVOL:200V) + CAPPRE:IEC , ((MOVOL:230V , MOVOL:575V) + COOL:AIR , MOVOL:460V) + CAPPRE:ULCUL + CAPPRM:ASME + FREQ:60HZ) + IDRY:N + MODEL:GA90VP_16

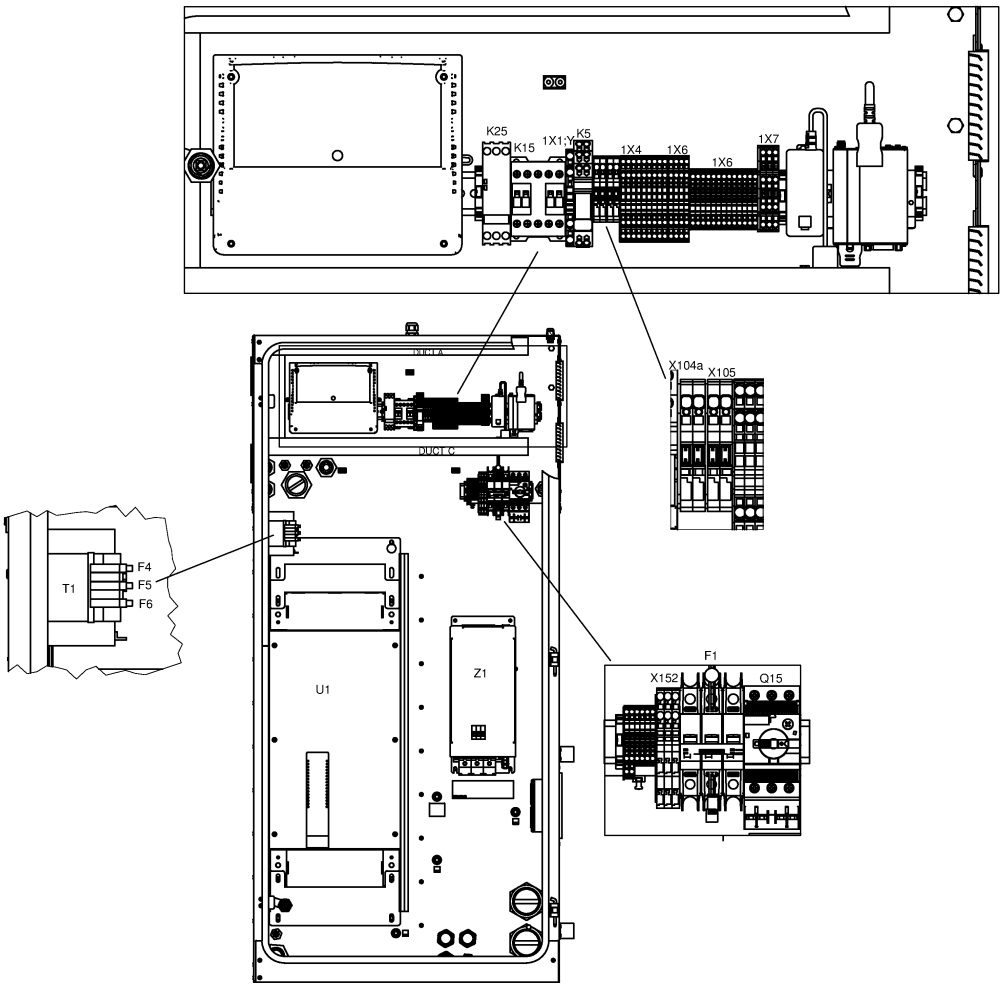

21.14 - Cubicle components GA 90 VSD+ - (200V-380V-460V/60Hz - IEC, 230V-460V-575V/60Hz - UL-cUL, 200V-400V-500V/50Hz - IEC) - Pack (20/07/2017 - 11/12/2018)

((((CAPPRM:AS1210 , CAPPRM:CE , CAPPRM:MHLW , CAPPRM:MOM) + MOVOL:400V , CAPPRM:CE + COOL:AIR + MOVOL:500V) + FREQ:50HZ , ((MOVOL:380V , MOVOL:460V) + CAPPRM:ASME , CAPPRM:MHLW + MOVOL:460V) + FREQ:60HZ , CAPPRM:MHLW + COOL:AIR + MOVOL:200V) + CAPPRE:IEC , ((MOVOL:230V , MOVOL:575V) + COOL:AIR , MOVOL:460V) + CAPPRE:ULCUL + CAPPRM:ASME + FREQ:60HZ) + IDRY:N + MODEL:GA90VP_16

Ref	Part Number	Qty	Name	Validity	EL
	0698 5140 71	1	CABLE GLAND	**(20/07/2017 - 20/08/2018)** ((((CAPPRM:AS1210 , CAPPRM:CE , CAPPRM:MHLW , CAPPRM:MOM) + MOVOL:400V , CAPPRM:CE + MOVOL:500V , CAPPRM:MHLW + MOVOL:200V) + FREQ:50HZ , ((MOVOL:200V , MOVOL:460V) + CAPPRM:MHLW , (MOVOL:380V , MOVOL:460V) + CAPPRM:ASME) + FREQ:60HZ) + CAPPRE:IEC , (MOVOL:230V , MOVOL:460V , MOVOL:575V) + CAPPRE:ULCUL + CAPPRM:ASME + FREQ:60HZ) + COOL:AIR **(21/08/2018 - 11/12/2018)**	
	Electrical legend:	Ambient sensor			
	0697 9809 20	1	LOCKNUT	**(20/07/2017 - 20/08/2018)** ((((CAPPRM:AS1210 , CAPPRM:CE , CAPPRM:MHLW , CAPPRM:MOM) + MOVOL:400V , CAPPRM:CE + MOVOL:500V , CAPPRM:MHLW + MOVOL:200V) + FREQ:50HZ , ((MOVOL:200V , MOVOL:460V) + CAPPRM:MHLW , (MOVOL:380V , MOVOL:460V) + CAPPRM:ASME) + FREQ:60HZ) + CAPPRE:IEC , (MOVOL:230V , MOVOL:460V , MOVOL:575V) + CAPPRE:ULCUL + CAPPRM:ASME + FREQ:60HZ) + COOL:AIR **(21/08/2018 - 11/12/2018)**	
	Electrical legend:	Ambient sensor			
	1089 9556 44	1	FAN WITH FILTER	**(20/07/2017 - 20/08/2018)** ((((CAPPRM:AS1210 , CAPPRM:CE , CAPPRM:MHLW , CAPPRM:MOM) + MOVOL:400V , CAPPRM:CE + MOVOL:500V , CAPPRM:MHLW + MOVOL:200V) + FREQ:50HZ , ((MOVOL:200V , MOVOL:460V) + CAPPRM:MHLW , (MOVOL:380V , MOVOL:460V) + CAPPRM:ASME) + FREQ:60HZ) + CAPPRE:IEC , (MOVOL:230V , MOVOL:460V , MOVOL:575V) + CAPPRE:ULCUL + CAPPRM:ASME + FREQ:60HZ) + COOL:AIR **(21/08/2018 - 11/12/2018)**	Cubicle fan
		4	AIR INLET W/O FILTER	**(20/07/2017 - 20/08/2018)** ((((CAPPRM:AS1210 , CAPPRM:CE , CAPPRM:MHLW , CAPPRM:MOM) + MOVOL:400V , CAPPRM:CE + MOVOL:500V , CAPPRM:MHLW + MOVOL:200V) + FREQ:50HZ , ((MOVOL:200V , MOVOL:460V) + CAPPRM:MHLW , (MOVOL:380V , MOVOL:460V) + CAPPRM:ASME) + FREQ:60HZ) + CAPPRE:IEC , (MOVOL:230V , MOVOL:460V , MOVOL:575V) + CAPPRE:ULCUL + CAPPRM:ASME + FREQ:60HZ) + COOL:AIR **(21/08/2018 - 11/12/2018)**	-
	Service kits:	2901 9901 02 - PREVENTIVE MAINTENANCE KIT - GA 90 VSD+, GA 110 VSD+ 2901 9900 96 - AIR FILTER KIT - GA 90 VSD+, GA 110 VSD+			
	1088 0032 09	1	CONNECTOR	**(20/07/2017 - 20/08/2018)** ((((CAPPRM:AS1210 , CAPPRM:CE , CAPPRM:MHLW , CAPPRM:MOM) + MOVOL:400V , CAPPRM:CE + MOVOL:500V , CAPPRM:MHLW + MOVOL:200V) + FREQ:50HZ , ((MOVOL:200V , MOVOL:460V) + CAPPRM:MHLW , (MOVOL:380V , MOVOL:460V) + CAPPRM:ASME) + FREQ:60HZ) + CAPPRE:IEC , (MOVOL:230V , MOVOL:460V , MOVOL:575V) + CAPPRE:ULCUL + CAPPRM:ASME + FREQ:60HZ) + COOL:AIR **(21/08/2018 - 11/12/2018)**	X3

Legend:

CAPPRE:IEC - Component approval electrical:IEC
CAPPRE:ULCUL - Component approval electrical:UL/cUL
CAPPRM:AS1210 - Component approval mechanical:AS1210
CAPPRM:ASME - Component approval mechanical:ASME
CAPPRM:CE - Component approval mechanical:CE
CAPPRM:MHLW - Component approval mechanical:MHLW
CAPPRM:MOM - Component approval mechanical:MOM
COOL:AIR - Cooling:Air cooled
FREQ:50HZ - Frequency:50 Hz
FREQ:60HZ - Frequency:60 Hz
IDRY:N - Integrated dryer:No
MODEL:GA90VP_16 - Model:GA 90VSD+
MOVOL:200V - Supply voltage:200 V
MOVOL:230V - Supply voltage:230 V
MOVOL:380V - Supply voltage:380 V
MOVOL:400V - Supply voltage:400 V
MOVOL:460V - Supply voltage:460 V
MOVOL:500V - Supply voltage:500 V
MOVOL:575V - Supply voltage:575 V

21.14 - Cubicle components GA 90 VSD+ - (200V-380V-460V/60Hz - IEC, 230V-460V-575V/60Hz - UL-cUL, 200V-400V-500V/50Hz - IEC) - Pack (20/07/2017 - 11/12/2018)

((((CAPPRM:AS1210 , CAPPRM:CE , CAPPRM:MHLW , CAPPRM:MOM) + MOVOL:400V , CAPPRM:CE + COOL:AIR + MOVOL:500V) + FREQ:50HZ , ((MOVOL:380V , MOVOL:460V) + CAPPRM:ASME , CAPPRM:MHLW + MOVOL:460V) + FREQ:60HZ , CAPPRM:MHLW + COOL:AIR + MOVOL:200V) + CAPPRE:IEC , ((MOVOL:230V , MOVOL:575V) + COOL:AIR , MOVOL:460V) + CAPPRE:ULCUL + CAPPRM:ASME + FREQ:60HZ) + IDRY:N + MODEL:GA90VP_16

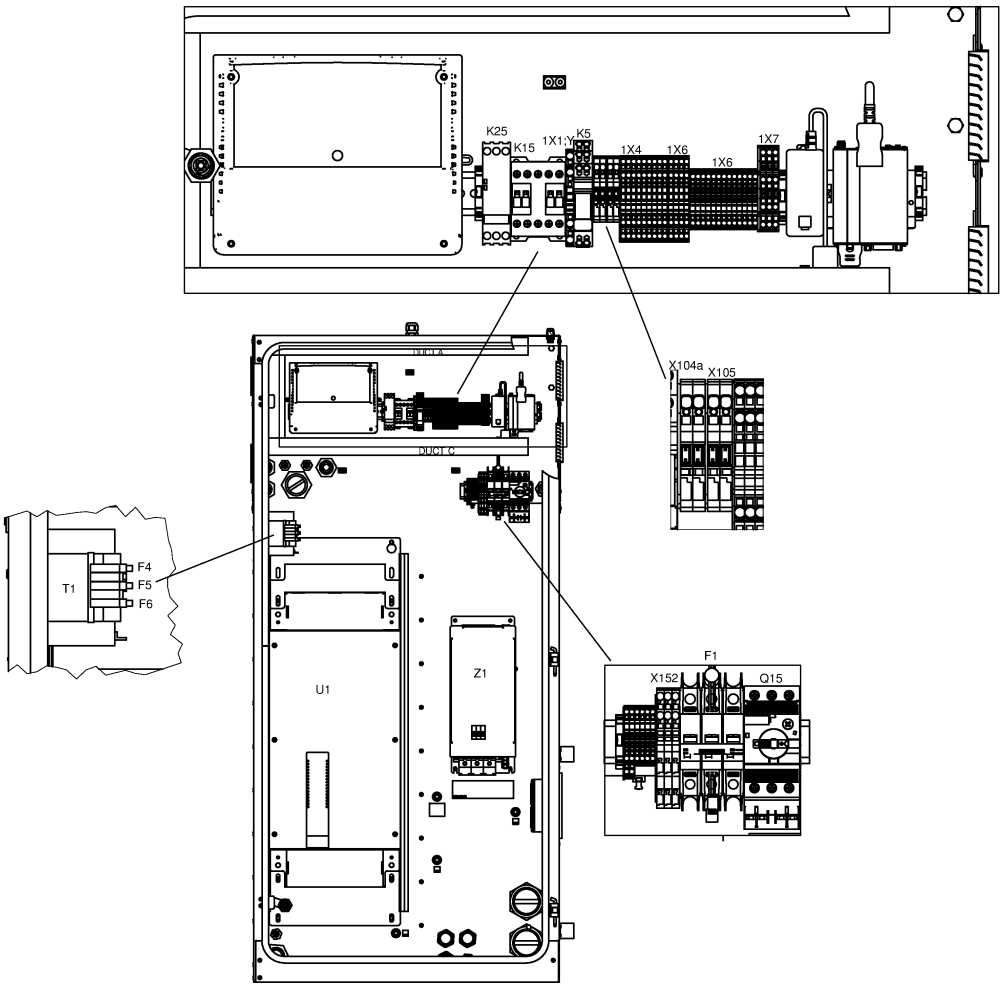

21.14 - Cubicle components GA 90 VSD+ - (200V-380V-460V/60Hz - IEC, 230V-460V-575V/60Hz - UL-cUL, 200V-400V-500V/50Hz - IEC) - Pack (20/07/2017 - 11/12/2018)

((((CAPPRM:AS1210 , CAPPRM:CE , CAPPRM:MHLW , CAPPRM:MOM) + MOVOL:400V , CAPPRM:CE + COOL:AIR + MOVOL:500V) + FREQ:50HZ , ((MOVOL:380V , MOVOL:460V) + CAPPRM:ASME , CAPPRM:MHLW + MOVOL:460V) + FREQ:60HZ , CAPPRM:MHLW + COOL:AIR + MOVOL:200V) + CAPPRE:IEC , ((MOVOL:230V , MOVOL:575V) + COOL:AIR , MOVOL:460V) + CAPPRE:ULCUL + CAPPRM:ASME + FREQ:60HZ) + IDRY:N + MODEL:GA90VP_16

Ref	Part Number	Qty	Name	Validity	EL
	1089 9572 06	1	LINE FILTER	**(20/07/2017 - 20/08/2018)** ((((CAPPRM:AS1210 , CAPPRM:CE , CAPPRM:MHLW , CAPPRM:MOM) + MOVOL:400V , CAPPRM:CE + MOVOL:500V , CAPPRM:MHLW + MOVOL:200V) + FREQ:50HZ , ((MOVOL:200V , MOVOL:460V) + CAPPRM:MHLW , (MOVOL:380V , MOVOL:460V) + CAPPRM:ASME) + FREQ:60HZ) + CAPPRE:IEC , (MOVOL:230V , MOVOL:460V , MOVOL:575V) + CAPPRE:ULCUL + CAPPRM:ASME + FREQ:60HZ) + COOL:AIR **(21/08/2018 - 11/12/2018)**	Z1 for 90kw
	1089 9562 04	1	STRAP	**(20/07/2017 - 20/08/2018)** ((((CAPPRM:AS1210 , CAPPRM:CE , CAPPRM:MHLW , CAPPRM:MOM) + MOVOL:400V , CAPPRM:CE + MOVOL:500V , CAPPRM:MHLW + MOVOL:200V) + FREQ:50HZ , ((MOVOL:200V , MOVOL:460V) + CAPPRM:MHLW , (MOVOL:380V , MOVOL:460V) + CAPPRM:ASME) + FREQ:60HZ) + CAPPRE:IEC , (MOVOL:230V , MOVOL:460V , MOVOL:575V) + CAPPRE:ULCUL + CAPPRM:ASME + FREQ:60HZ) + COOL:AIR **(21/08/2018 - 11/12/2018)**	HF-screen
	1089 9514 56	1	TRANSFORMER	**(20/07/2017 - 20/08/2018)** ((((CAPPRM:AS1210 , CAPPRM:CE , CAPPRM:MHLW , CAPPRM:MOM) + MOVOL:400V , CAPPRM:CE + MOVOL:500V , CAPPRM:MHLW + MOVOL:200V) + FREQ:50HZ , ((MOVOL:200V , MOVOL:460V) + CAPPRM:MHLW , (MOVOL:380V , MOVOL:460V) + CAPPRM:ASME) + FREQ:60HZ) + CAPPRE:IEC , (MOVOL:230V , MOVOL:460V , MOVOL:575V) + CAPPRE:ULCUL + CAPPRM:ASME + FREQ:60HZ) + COOL:AIR **(21/08/2018 - 11/12/2018)**	T1
	1089 9522 26	1	CIRCUIT BREAKER	**(20/07/2017 - 20/08/2018)** ((((CAPPRM:AS1210 , CAPPRM:CE , CAPPRM:MHLW , CAPPRM:MOM) + MOVOL:400V , CAPPRM:CE + MOVOL:500V , CAPPRM:MHLW + MOVOL:200V) + FREQ:50HZ , ((MOVOL:200V , MOVOL:460V) + CAPPRM:MHLW , (MOVOL:380V , MOVOL:460V) + CAPPRM:ASME) + FREQ:60HZ) + CAPPRE:IEC , (MOVOL:230V , MOVOL:460V , MOVOL:575V) + CAPPRE:ULCUL + CAPPRM:ASME + FREQ:60HZ) + COOL:AIR **(21/08/2018 - 11/12/2018)**	F1
	1089 9513 41	1	PUSH BUTTON	**(20/07/2017 - 20/08/2018)** ((((CAPPRM:AS1210 , CAPPRM:CE , CAPPRM:MHLW , CAPPRM:MOM) + MOVOL:400V , CAPPRM:CE + MOVOL:500V , CAPPRM:MHLW + MOVOL:200V) + FREQ:50HZ , ((MOVOL:200V , MOVOL:460V) + CAPPRM:MHLW , (MOVOL:380V , MOVOL:460V) + CAPPRM:ASME) + FREQ:60HZ) + CAPPRE:IEC , (MOVOL:230V , MOVOL:460V , MOVOL:575V) + CAPPRE:ULCUL + CAPPRM:ASME + FREQ:60HZ) + COOL:AIR **(21/08/2018 - 11/12/2018)**	S3
	1089 9513 28	1	HOLDER	**(20/07/2017 - 20/08/2018)** ((((CAPPRM:AS1210 , CAPPRM:CE , CAPPRM:MHLW , CAPPRM:MOM) + MOVOL:400V , CAPPRM:CE + MOVOL:500V , CAPPRM:MHLW + MOVOL:200V) + FREQ:50HZ , ((MOVOL:200V , MOVOL:460V) + CAPPRM:MHLW , (MOVOL:380V , MOVOL:460V) + CAPPRM:ASME) + FREQ:60HZ) + CAPPRE:IEC , (MOVOL:230V , MOVOL:460V , MOVOL:575V) + CAPPRE:ULCUL + CAPPRM:ASME + FREQ:60HZ) + COOL:AIR **(21/08/2018 - 11/12/2018)**	S3

Legend:

CAPPRE:IEC - Component approval electrical:IEC
CAPPRE:ULCUL - Component approval electrical:UL/cUL
CAPPRM:AS1210 - Component approval mechanical:AS1210
CAPPRM:ASME - Component approval mechanical:ASME
CAPPRM:CE - Component approval mechanical:CE
CAPPRM:MHLW - Component approval mechanical:MHLW
CAPPRM:MOM - Component approval mechanical:MOM
COOL:AIR - Cooling:Air cooled
FREQ:50HZ - Frequency:50 Hz
FREQ:60HZ - Frequency:60 Hz
IDRY:N - Integrated dryer:No
MODEL:GA90VP_16 - Model:GA 90VSD+
MOVOL:200V - Supply voltage:200 V
MOVOL:230V - Supply voltage:230 V
MOVOL:380V - Supply voltage:380 V
MOVOL:400V - Supply voltage:400 V
MOVOL:460V - Supply voltage:460 V
MOVOL:500V - Supply voltage:500 V
MOVOL:575V - Supply voltage:575 V

21.14 - Cubicle components GA 90 VSD+ - (200V-380V-460V/60Hz - IEC, 230V-460V-575V/60Hz - UL-cUL, 200V-400V-500V/50Hz - IEC) - Pack (20/07/2017 - 11/12/2018)

((((CAPPRM:AS1210 , CAPPRM:CE , CAPPRM:MHLW , CAPPRM:MOM) + MOVOL:400V , CAPPRM:CE + COOL:AIR + MOVOL:500V) + FREQ:50HZ , ((MOVOL:380V , MOVOL:460V) + CAPPRM:ASME , CAPPRM:MHLW + MOVOL:460V) + FREQ:60HZ , CAPPRM:MHLW + COOL:AIR + MOVOL:200V) + CAPPRE:IEC , ((MOVOL:230V , MOVOL:575V) + COOL:AIR , MOVOL:460V) + CAPPRE:ULCUL + CAPPRM:ASME + FREQ:60HZ) + IDRY:N + MODEL:GA90VP_16

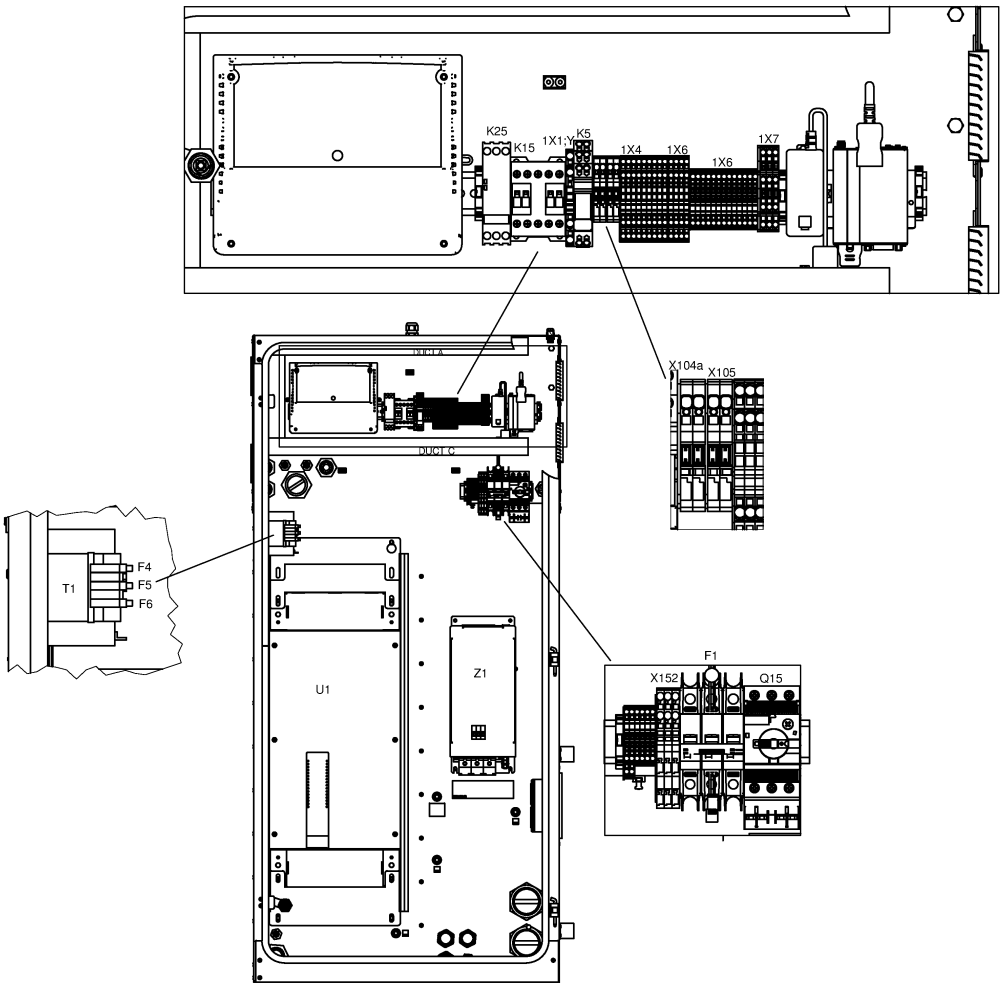

Ref	Part Number	Qty	Name	Validity	EL
	~~1089 9513 30~~	4	CONTACTOR	**(20/07/2017 - 20/08/2018)** ((((CAPPRM:AS1210 , CAPPRM:CE , CAPPRM:MHLW , CAPPRM:MOM) + MOVOL:400V , CAPPRM:CE + MOVOL:500V , CAPPRM:MHLW + MOVOL:200V) + FREQ:50HZ , ((MOVOL:200V , MOVOL:460V) + CAPPRM:MHLW , (MOVOL:380V , MOVOL:460V) + CAPPRM:ASME) + FREQ:60HZ) + CAPPRE:IEC , (MOVOL:230V , MOVOL:460V , MOVOL:575V) + CAPPRE:ULCUL + CAPPRM:ASME + FREQ:60HZ) + COOL:AIR **(21/08/2018 - 11/12/2018)**	S3
	Substituted by:	1089 9513 04 - CONTACT BLOCK (quantity: 1)			
	1088 0031 02	1	CONNECTOR 2-POLE	**(20/07/2017 - 20/08/2018)** ((((CAPPRM:AS1210 , CAPPRM:CE , CAPPRM:MHLW , CAPPRM:MOM) + MOVOL:400V , CAPPRM:CE + MOVOL:500V , CAPPRM:MHLW + MOVOL:200V) + FREQ:50HZ , ((MOVOL:200V , MOVOL:460V) + CAPPRM:MHLW , (MOVOL:380V , MOVOL:460V) + CAPPRM:ASME) + FREQ:60HZ) + CAPPRE:IEC , (MOVOL:230V , MOVOL:460V , MOVOL:575V) + CAPPRE:ULCUL + CAPPRM:ASME + FREQ:60HZ) + COOL:AIR **(21/08/2018 - 11/12/2018)**	
	Electrical legend:	X153 (Smartbox)			
	1088 0039 07	3	TERMINAL	**(20/07/2017 - 20/08/2018)** ((((CAPPRM:AS1210 , CAPPRM:CE , CAPPRM:MHLW , CAPPRM:MOM) + MOVOL:400V , CAPPRM:CE + MOVOL:500V , CAPPRM:MHLW + MOVOL:200V) + FREQ:50HZ , ((MOVOL:200V , MOVOL:460V) + CAPPRM:MHLW , (MOVOL:380V , MOVOL:460V) + CAPPRM:ASME) + FREQ:60HZ) + CAPPRE:IEC , (MOVOL:230V , MOVOL:460V , MOVOL:575V) + CAPPRE:ULCUL + CAPPRM:ASME + FREQ:60HZ) + COOL:AIR **(21/08/2018 - 11/12/2018)**	X152
	1088 0039 05	1	PLATE	**(20/07/2017 - 20/08/2018)** ((((CAPPRM:AS1210 , CAPPRM:CE , CAPPRM:MHLW , CAPPRM:MOM) + MOVOL:400V , CAPPRM:CE + MOVOL:500V , CAPPRM:MHLW + MOVOL:200V) + FREQ:50HZ , ((MOVOL:200V , MOVOL:460V) + CAPPRM:MHLW , (MOVOL:380V , MOVOL:460V) + CAPPRM:ASME) + FREQ:60HZ) + CAPPRE:IEC , (MOVOL:230V , MOVOL:460V , MOVOL:575V) + CAPPRE:ULCUL + CAPPRM:ASME + FREQ:60HZ) + COOL:AIR **(21/08/2018 - 11/12/2018)**	X152
	1088 0039 26	1	CONNECTOR	**(20/07/2017 - 20/08/2018)** ((((CAPPRM:AS1210 , CAPPRM:CE , CAPPRM:MHLW , CAPPRM:MOM) + MOVOL:400V , CAPPRM:CE + MOVOL:500V , CAPPRM:MHLW + MOVOL:200V) + FREQ:50HZ , ((MOVOL:200V , MOVOL:460V) + CAPPRM:MHLW , (MOVOL:380V , MOVOL:460V) + CAPPRM:ASME) + FREQ:60HZ) + CAPPRE:IEC , (MOVOL:230V , MOVOL:460V , MOVOL:575V) + CAPPRE:ULCUL + CAPPRM:ASME + FREQ:60HZ) + COOL:AIR **(21/08/2018 - 11/12/2018)**	
	Electrical legend:	X152 (remove coding pin 1,3)			
	1088 0037 99	4	PIN	**(20/07/2017 - 20/08/2018)** ((((CAPPRM:AS1210 , CAPPRM:CE , CAPPRM:MHLW , CAPPRM:MOM) + MOVOL:400V , CAPPRM:CE + MOVOL:500V , CAPPRM:MHLW + MOVOL:200V) + FREQ:50HZ , ((MOVOL:200V , MOVOL:460V) + CAPPRM:MHLW , (MOVOL:380V , MOVOL:460V) + CAPPRM:ASME) + FREQ:60HZ) + CAPPRE:IEC , (MOVOL:230V , MOVOL:460V , MOVOL:575V) + CAPPRE:ULCUL + CAPPRM:ASME + FREQ:60HZ) + COOL:AIR **(21/08/2018 - 11/12/2018)**	X152:1; 3

Legend:

CAPPRE:IEC - Component approval electrical:IEC
CAPPRE:ULCUL - Component approval electrical:UL/cUL
CAPPRM:AS1210 - Component approval mechanical:AS1210
CAPPRM:ASME - Component approval mechanical:ASME
CAPPRM:CE - Component approval mechanical:CE
CAPPRM:MHLW - Component approval mechanical:MHLW
CAPPRM:MOM - Component approval mechanical:MOM
COOL:AIR - Cooling:Air cooled
FREQ:50HZ - Frequency:50 Hz
FREQ:60HZ - Frequency:60 Hz
IDRY:N - Integrated dryer:No
MODEL:GA90VP_16 - Model:GA 90VSD+
MOVOL:200V - Supply voltage:200 V
MOVOL:230V - Supply voltage:230 V
MOVOL:380V - Supply voltage:380 V
MOVOL:400V - Supply voltage:400 V
MOVOL:460V - Supply voltage:460 V
MOVOL:500V - Supply voltage:500 V
MOVOL:575V - Supply voltage:575 V

21.14 - Cubicle components GA 90 VSD+ - (200V-380V-460V/60Hz - IEC, 230V-460V-575V/60Hz - UL-cUL, 200V-400V-500V/50Hz - IEC) - Pack (20/07/2017 - 11/12/2018)

((((CAPPRM:AS1210 , CAPPRM:CE , CAPPRM:MHLW , CAPPRM:MOM) + MOVOL:400V , CAPPRM:CE + COOL:AIR + MOVOL:500V) + FREQ:50HZ , ((MOVOL:380V , MOVOL:460V) + CAPPRM:ASME , CAPPRM:MHLW + MOVOL:460V) + FREQ:60HZ , CAPPRM:MHLW + COOL:AIR + MOVOL:200V) + CAPPRE:IEC , ((MOVOL:230V , MOVOL:575V) + COOL:AIR , MOVOL:460V) + CAPPRE:ULCUL + CAPPRM:ASME + FREQ:60HZ) + IDRY:N + MODEL:GA90VP_16

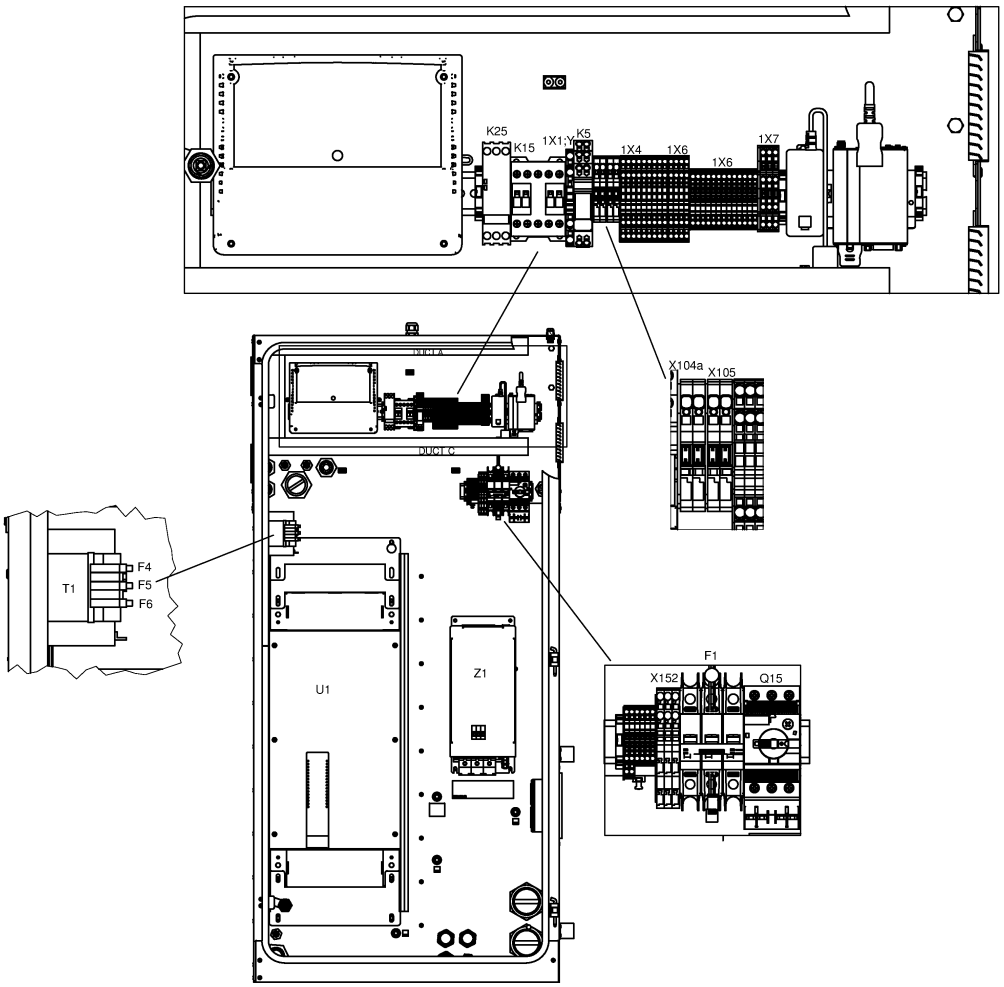

Ref	Part Number	Qty	Name	Validity	EL
	~~1088 0031 81~~	7	END STOP BRACKET 6MM	**(20/07/2017 - 20/08/2018)** ((((CAPPRM:AS1210 , CAPPRM:CE , CAPPRM:MHLW , CAPPRM:MOM) + MOVOL:400V , CAPPRM:CE + MOVOL:500V , CAPPRM:MHLW + MOVOL:200V) + FREQ:50HZ , ((MOVOL:200V , MOVOL:460V) + CAPPRM:MHLW , (MOVOL:380V , MOVOL:460V) + CAPPRM:ASME) + FREQ:60HZ) + CAPPRE:IEC , (MOVOL:230V , MOVOL:460V , MOVOL:575V) + CAPPRE:ULCUL + CAPPRM:ASME + FREQ:60HZ) + COOL:AIR **(21/08/2018 - 11/12/2018)**	
	Electrical legend:	Connector/terminal rail			
	Substituted by:	1089 0577 82 - END RETAINER (quantity: 1)			
	1088 0039 38	2	TERMINAL	**(20/07/2017 - 20/08/2018)** ((((CAPPRM:AS1210 , CAPPRM:CE , CAPPRM:MHLW , CAPPRM:MOM) + MOVOL:400V , CAPPRM:CE + MOVOL:500V , CAPPRM:MHLW + MOVOL:200V) + FREQ:50HZ , ((MOVOL:200V , MOVOL:460V) + CAPPRM:MHLW , (MOVOL:380V , MOVOL:460V) + CAPPRM:ASME) + FREQ:60HZ) + CAPPRE:IEC , (MOVOL:230V , MOVOL:460V , MOVOL:575V) + CAPPRE:ULCUL + CAPPRM:ASME + FREQ:60HZ) + COOL:AIR **(21/08/2018 - 11/12/2018)**	1X11:2,5
	1088 0039 40	1	PLATE	**(20/07/2017 - 20/08/2018)** ((((CAPPRM:AS1210 , CAPPRM:CE , CAPPRM:MHLW , CAPPRM:MOM) + MOVOL:400V , CAPPRM:CE + MOVOL:500V , CAPPRM:MHLW + MOVOL:200V) + FREQ:50HZ , ((MOVOL:200V , MOVOL:460V) + CAPPRM:MHLW , (MOVOL:380V , MOVOL:460V) + CAPPRM:ASME) + FREQ:60HZ) + CAPPRE:IEC , (MOVOL:230V , MOVOL:460V , MOVOL:575V) + CAPPRE:ULCUL + CAPPRM:ASME + FREQ:60HZ) + COOL:AIR **(21/08/2018 - 11/12/2018)**	1X11
	1088 0039 34	4	TERMINAL	**(20/07/2017 - 20/08/2018)** ((((CAPPRM:AS1210 , CAPPRM:CE , CAPPRM:MHLW , CAPPRM:MOM) + MOVOL:400V , CAPPRM:CE + MOVOL:500V , CAPPRM:MHLW + MOVOL:200V) + FREQ:50HZ , ((MOVOL:200V , MOVOL:460V) + CAPPRM:MHLW , (MOVOL:380V , MOVOL:460V) + CAPPRM:ASME) + FREQ:60HZ) + CAPPRE:IEC , (MOVOL:230V , MOVOL:460V , MOVOL:575V) + CAPPRE:ULCUL + CAPPRM:ASME + FREQ:60HZ) + COOL:AIR **(21/08/2018 - 11/12/2018)**	
	Electrical legend:	1X11:30,301,34			
	1088 0039 35	1	PLATE	**(20/07/2017 - 20/08/2018)** ((((CAPPRM:AS1210 , CAPPRM:CE , CAPPRM:MHLW , CAPPRM:MOM) + MOVOL:400V , CAPPRM:CE + MOVOL:500V , CAPPRM:MHLW + MOVOL:200V) + FREQ:50HZ , ((MOVOL:200V , MOVOL:460V) + CAPPRM:MHLW , (MOVOL:380V , MOVOL:460V) + CAPPRM:ASME) + FREQ:60HZ) + CAPPRE:IEC , (MOVOL:230V , MOVOL:460V , MOVOL:575V) + CAPPRE:ULCUL + CAPPRM:ASME + FREQ:60HZ) + COOL:AIR **(21/08/2018 - 11/12/2018)**	1X11
	1088 0039 04	2	TERMINAL	**(20/07/2017 - 20/08/2018)** ((((CAPPRM:AS1210 , CAPPRM:CE , CAPPRM:MHLW , CAPPRM:MOM) + MOVOL:400V , CAPPRM:CE + MOVOL:500V , CAPPRM:MHLW + MOVOL:200V) + FREQ:50HZ , ((MOVOL:200V , MOVOL:460V) + CAPPRM:MHLW , (MOVOL:380V , MOVOL:460V) + CAPPRM:ASME) + FREQ:60HZ) + CAPPRE:IEC , (MOVOL:230V , MOVOL:460V , MOVOL:575V) + CAPPRE:ULCUL + CAPPRM:ASME + FREQ:60HZ) + COOL:AIR **(21/08/2018 - 11/12/2018)**	X104a

Legend:

CAPPRE:IEC - Component approval electrical:IEC
CAPPRE:ULCUL - Component approval electrical:UL/cUL
CAPPRM:AS1210 - Component approval mechanical:AS1210
CAPPRM:ASME - Component approval mechanical:ASME
CAPPRM:CE - Component approval mechanical:CE
CAPPRM:MHLW - Component approval mechanical:MHLW
CAPPRM:MOM - Component approval mechanical:MOM
COOL:AIR - Cooling:Air cooled
FREQ:50HZ - Frequency:50 Hz
FREQ:60HZ - Frequency:60 Hz
IDRY:N - Integrated dryer:No
MODEL:GA90VP_16 - Model:GA 90VSD+
MOVOL:200V - Supply voltage:200 V
MOVOL:230V - Supply voltage:230 V
MOVOL:380V - Supply voltage:380 V
MOVOL:400V - Supply voltage:400 V
MOVOL:460V - Supply voltage:460 V
MOVOL:500V - Supply voltage:500 V
MOVOL:575V - Supply voltage:575 V

21.14 - Cubicle components GA 90 VSD+ - (200V-380V-460V/60Hz - IEC, 230V-460V-575V/60Hz - UL-cUL, 200V-400V-500V/50Hz - IEC) - Pack (20/07/2017 - 11/12/2018)

((((CAPPRM:AS1210 , CAPPRM:CE , CAPPRM:MHLW , CAPPRM:MOM) + MOVOL:400V , CAPPRM:CE + COOL:AIR + MOVOL:500V) + FREQ:50HZ , ((MOVOL:380V , MOVOL:460V) + CAPPRM:ASME , CAPPRM:MHLW + MOVOL:460V) + FREQ:60HZ , CAPPRM:MHLW + COOL:AIR + MOVOL:200V) + CAPPRE:IEC , ((MOVOL:230V , MOVOL:575V) + COOL:AIR , MOVOL:460V) + CAPPRE:ULCUL + CAPPRM:ASME + FREQ:60HZ) + IDRY:N + MODEL:GA90VP_16

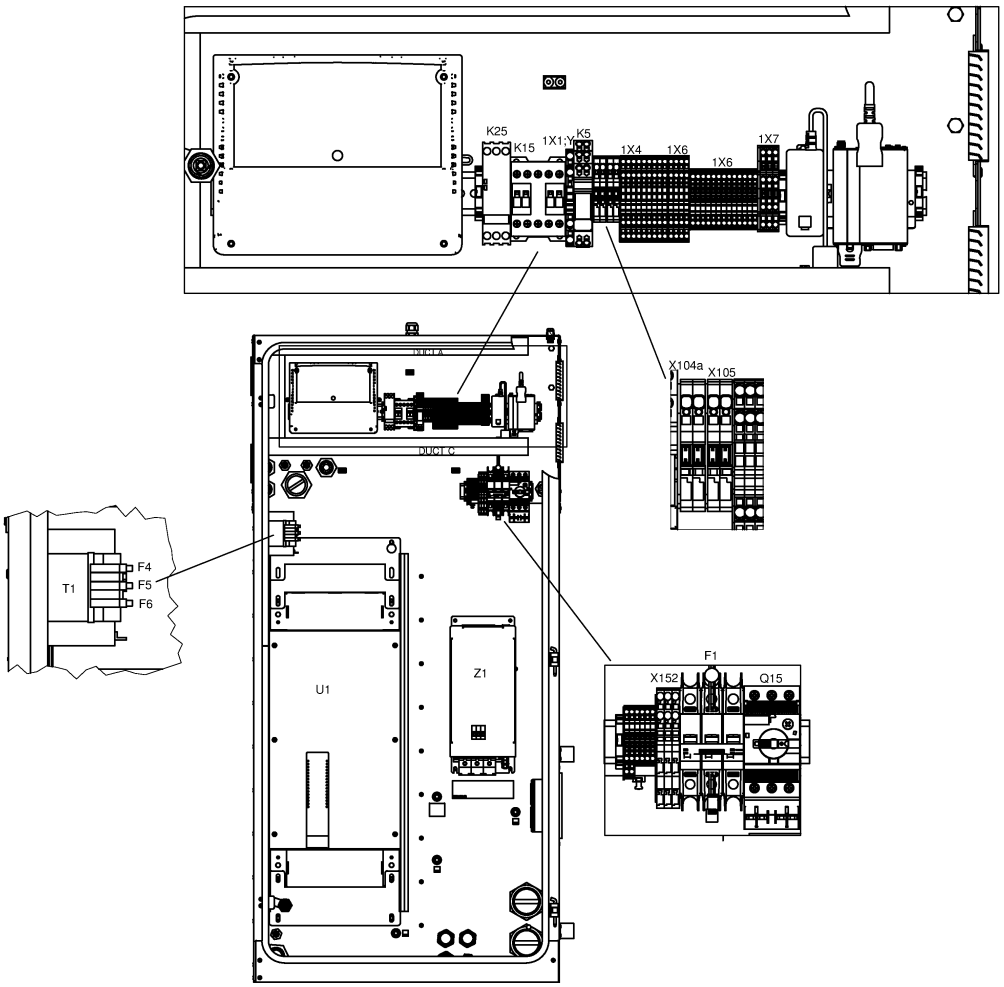

21.14 - Cubicle components GA 90 VSD+ - (200V-380V-460V/60Hz - IEC, 230V-460V-575V/60Hz - UL-cUL, 200V-400V-500V/50Hz - IEC) - Pack (20/07/2017 - 11/12/2018)

((((CAPPRM:AS1210 , CAPPRM:CE , CAPPRM:MHLW , CAPPRM:MOM) + MOVOL:400V , CAPPRM:CE + COOL:AIR + MOVOL:500V) + FREQ:50HZ , ((MOVOL:380V , MOVOL:460V) + CAPPRM:ASME , CAPPRM:MHLW + MOVOL:460V) + FREQ:60HZ , CAPPRM:MHLW + COOL:AIR + MOVOL:200V) + CAPPRE:IEC , ((MOVOL:230V , MOVOL:575V) + COOL:AIR , MOVOL:460V) + CAPPRE:ULCUL + CAPPRM:ASME + FREQ:60HZ) + IDRY:N + MODEL:GA90VP_16

Ref	Part Number	Qty	Name	Validity	EL
	1088 0037 99	2	PIN	**(20/07/2017 - 20/08/2018)** ((((CAPPRM:AS1210 , CAPPRM:CE , CAPPRM:MHLW , CAPPRM:MOM) + MOVOL:400V , CAPPRM:CE + MOVOL:500V , CAPPRM:MHLW + MOVOL:200V) + FREQ:50HZ , ((MOVOL:200V , MOVOL:460V) + CAPPRM:MHLW , (MOVOL:380V , MOVOL:460V) + CAPPRM:ASME) + FREQ:60HZ) + CAPPRE:IEC , (MOVOL:230V , MOVOL:460V , MOVOL:575V) + CAPPRE:ULCUL + CAPPRM:ASME + FREQ:60HZ) + COOL:AIR **(21/08/2018 - 11/12/2018)**	X104a/X105
	1088 0039 02	1	PLATE	**(20/07/2017 - 20/08/2018)** ((((CAPPRM:AS1210 , CAPPRM:CE , CAPPRM:MHLW , CAPPRM:MOM) + MOVOL:400V , CAPPRM:CE + MOVOL:500V , CAPPRM:MHLW + MOVOL:200V) + FREQ:50HZ , ((MOVOL:200V , MOVOL:460V) + CAPPRM:MHLW , (MOVOL:380V , MOVOL:460V) + CAPPRM:ASME) + FREQ:60HZ) + CAPPRE:IEC , (MOVOL:230V , MOVOL:460V , MOVOL:575V) + CAPPRE:ULCUL + CAPPRM:ASME + FREQ:60HZ) + COOL:AIR **(21/08/2018 - 11/12/2018)**	X104a
	1088 0039 04	2	TERMINAL	**(20/07/2017 - 20/08/2018)** ((((CAPPRM:AS1210 , CAPPRM:CE , CAPPRM:MHLW , CAPPRM:MOM) + MOVOL:400V , CAPPRM:CE + MOVOL:500V , CAPPRM:MHLW + MOVOL:200V) + FREQ:50HZ , ((MOVOL:200V , MOVOL:460V) + CAPPRM:MHLW , (MOVOL:380V , MOVOL:460V) + CAPPRM:ASME) + FREQ:60HZ) + CAPPRE:IEC , (MOVOL:230V , MOVOL:460V , MOVOL:575V) + CAPPRE:ULCUL + CAPPRM:ASME + FREQ:60HZ) + COOL:AIR **(21/08/2018 - 11/12/2018)**	
	1088 0039 02	1	PLATE	**(20/07/2017 - 20/08/2018)** ((((CAPPRM:AS1210 , CAPPRM:CE , CAPPRM:MHLW , CAPPRM:MOM) + MOVOL:400V , CAPPRM:CE + MOVOL:500V , CAPPRM:MHLW + MOVOL:200V) + FREQ:50HZ , ((MOVOL:200V , MOVOL:460V) + CAPPRM:MHLW , (MOVOL:380V , MOVOL:460V) + CAPPRM:ASME) + FREQ:60HZ) + CAPPRE:IEC , (MOVOL:230V , MOVOL:460V , MOVOL:575V) + CAPPRE:ULCUL + CAPPRM:ASME + FREQ:60HZ) + COOL:AIR **(21/08/2018 - 11/12/2018)**	
	1088 0039 34	13	TERMINAL	**(20/07/2017 - 20/08/2018)** ((((CAPPRM:AS1210 , CAPPRM:CE , CAPPRM:MHLW , CAPPRM:MOM) + MOVOL:400V , CAPPRM:CE + MOVOL:500V , CAPPRM:MHLW + MOVOL:200V) + FREQ:50HZ , ((MOVOL:200V , MOVOL:460V) + CAPPRM:MHLW , (MOVOL:380V , MOVOL:460V) + CAPPRM:ASME) + FREQ:60HZ) + CAPPRE:IEC , (MOVOL:230V , MOVOL:460V , MOVOL:575V) + CAPPRE:ULCUL + CAPPRM:ASME + FREQ:60HZ) + COOL:AIR **(21/08/2018 - 11/12/2018)**	1X6
	1088 0037 69	3	CONNECTOR	**(20/07/2017 - 20/08/2018)** ((((CAPPRM:AS1210 , CAPPRM:CE , CAPPRM:MHLW , CAPPRM:MOM) + MOVOL:400V , CAPPRM:CE + MOVOL:500V , CAPPRM:MHLW + MOVOL:200V) + FREQ:50HZ , ((MOVOL:200V , MOVOL:460V) + CAPPRM:MHLW , (MOVOL:380V , MOVOL:460V) + CAPPRM:ASME) + FREQ:60HZ) + CAPPRE:IEC , (MOVOL:230V , MOVOL:460V , MOVOL:575V) + CAPPRE:ULCUL + CAPPRM:ASME + FREQ:60HZ) + COOL:AIR **(21/08/2018 - 11/12/2018)**	1X7

Legend:

CAPPRE:IEC - Component approval electrical:IEC
CAPPRM:ASME - Component approval mechanical:ASME
CAPPRM:MOM - Component approval mechanical:MOM
FREQ:60HZ - Frequency:60 Hz
MOVOL:200V - Supply voltage:200 V
MOVOL:400V - Supply voltage:400 V
MOVOL:575V - Supply voltage:575 V
CAPPRE:ULCUL - Component approval electrical:UL/cUL
CAPPRM:CE - Component approval mechanical:CE
COOL:AIR - Cooling:Air cooled
IDRY:N - Integrated dryer:No
MOVOL:230V - Supply voltage:230 V
MOVOL:460V - Supply voltage:460 V
CAPPRM:AS1210 - Component approval mechanical:AS1210
CAPPRM:MHLW - Component approval mechanical:MHLW
FREQ:50HZ - Frequency:50 Hz
MODEL:GA90VP_16 - Model:GA 90VSD+
MOVOL:380V - Supply voltage:380 V
MOVOL:500V - Supply voltage:500 V

21.14 - Cubicle components GA 90 VSD+ - (200V-380V-460V/60Hz - IEC, 230V-460V-575V/60Hz - UL-cUL, 200V-400V-500V/50Hz - IEC) - Pack (20/07/2017 - 11/12/2018)

((((CAPPRM:AS1210 , CAPPRM:CE , CAPPRM:MHLW , CAPPRM:MOM) + MOVOL:400V , CAPPRM:CE + COOL:AIR + MOVOL:500V) + FREQ:50HZ , ((MOVOL:380V , MOVOL:460V) + CAPPRM:ASME , CAPPRM:MHLW + MOVOL:460V) + FREQ:60HZ , CAPPRM:MHLW + COOL:AIR + MOVOL:200V) + CAPPRE:IEC , ((MOVOL:230V , MOVOL:575V) + COOL:AIR , MOVOL:460V) + CAPPRE:ULCUL + CAPPRM:ASME + FREQ:60HZ) + IDRY:N + MODEL:GA90VP_16

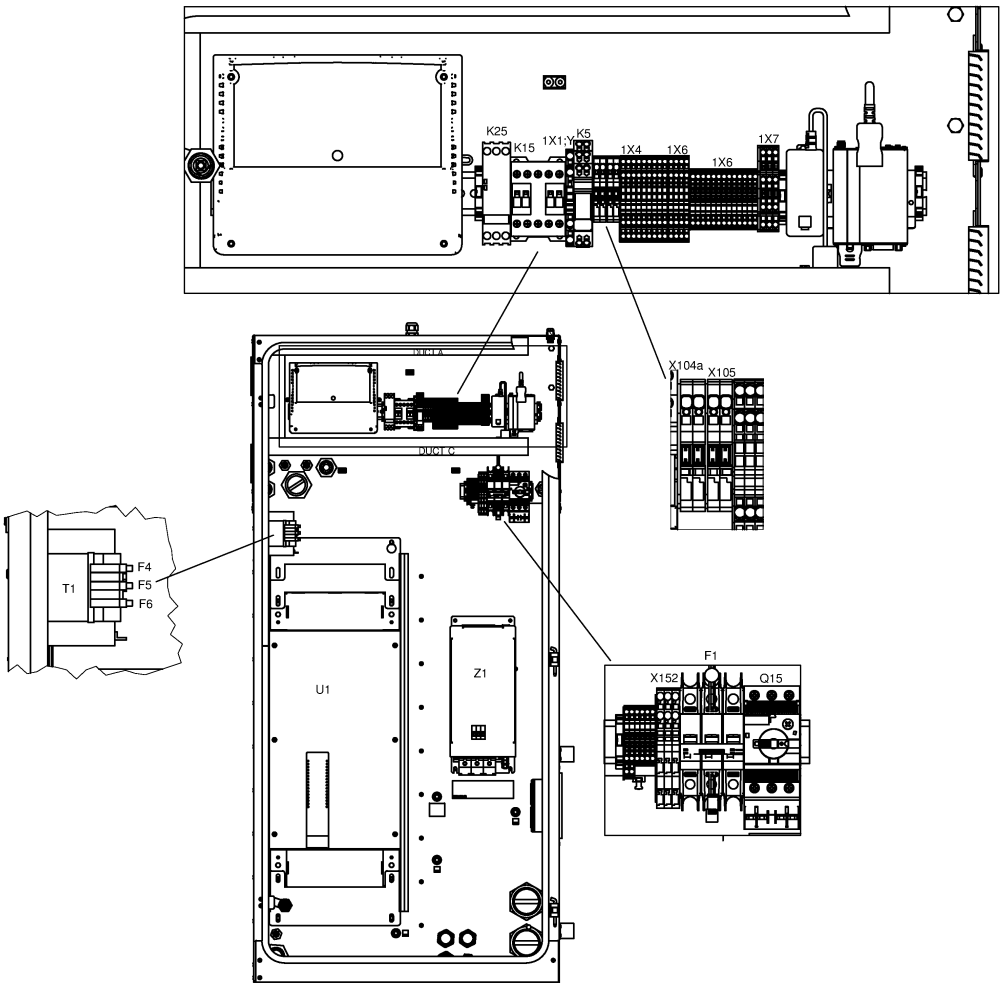

21.14 - Cubicle components GA 90 VSD+ - (200V-380V-460V/60Hz - IEC, 230V-460V-575V/60Hz - UL-cUL, 200V-400V-500V/50Hz - IEC) - Pack (20/07/2017 - 11/12/2018)

((((CAPPRM:AS1210 , CAPPRM:CE , CAPPRM:MHLW , CAPPRM:MOM) + MOVOL:400V , CAPPRM:CE + COOL:AIR + MOVOL:500V) + FREQ:50HZ , ((MOVOL:380V , MOVOL:460V) + CAPPRM:ASME , CAPPRM:MHLW + MOVOL:460V) + FREQ:60HZ , CAPPRM:MHLW + COOL:AIR + MOVOL:200V) + CAPPRE:IEC , ((MOVOL:230V , MOVOL:575V) + COOL:AIR , MOVOL:460V) + CAPPRE:ULCUL + CAPPRM:ASME + FREQ:60HZ) + IDRY:N + MODEL:GA90VP_16

Ref	Part Number	Qty	Name	Validity	EL
	1088 0039 35	1	PLATE	**(20/07/2017 - 20/08/2018)** ((((CAPPRM:AS1210 , CAPPRM:CE , CAPPRM:MHLW , CAPPRM:MOM) + MOVOL:400V , CAPPRM:CE + MOVOL:500V , CAPPRM:MHLW + MOVOL:200V) + FREQ:50HZ , ((MOVOL:200V , MOVOL:460V) + CAPPRM:MHLW , (MOVOL:380V , MOVOL:460V) + CAPPRM:ASME) + FREQ:60HZ) + CAPPRE:IEC , (MOVOL:230V , MOVOL:460V , MOVOL:575V) + CAPPRE:ULCUL + CAPPRM:ASME + FREQ:60HZ) + COOL:AIR **(21/08/2018 - 11/12/2018)**	1X6
	1088 0040 37	1	END PLATE	**(20/07/2017 - 20/08/2018)** ((((CAPPRM:AS1210 , CAPPRM:CE , CAPPRM:MHLW , CAPPRM:MOM) + MOVOL:400V , CAPPRM:CE + MOVOL:500V , CAPPRM:MHLW + MOVOL:200V) + FREQ:50HZ , ((MOVOL:200V , MOVOL:460V) + CAPPRM:MHLW , (MOVOL:380V , MOVOL:460V) + CAPPRM:ASME) + FREQ:60HZ) + CAPPRE:IEC , (MOVOL:230V , MOVOL:460V , MOVOL:575V) + CAPPRE:ULCUL + CAPPRM:ASME + FREQ:60HZ) + COOL:AIR **(21/08/2018 - 11/12/2018)**	1X7
	1088 0039 36	9	TERMINAL	**(20/07/2017 - 20/08/2018)** ((((CAPPRM:AS1210 , CAPPRM:CE , CAPPRM:MHLW , CAPPRM:MOM) + MOVOL:400V , CAPPRM:CE + MOVOL:500V , CAPPRM:MHLW + MOVOL:200V) + FREQ:50HZ , ((MOVOL:200V , MOVOL:460V) + CAPPRM:MHLW , (MOVOL:380V , MOVOL:460V) + CAPPRM:ASME) + FREQ:60HZ) + CAPPRE:IEC , (MOVOL:230V , MOVOL:460V , MOVOL:575V) + CAPPRE:ULCUL + CAPPRM:ASME + FREQ:60HZ) + COOL:AIR **(21/08/2018 - 11/12/2018)**	1X4
	1088 0039 36	4	TERMINAL	**(20/07/2017 - 20/08/2018)** ((((CAPPRM:AS1210 , CAPPRM:CE , CAPPRM:MHLW , CAPPRM:MOM) + MOVOL:400V , CAPPRM:CE + MOVOL:500V , CAPPRM:MHLW + MOVOL:200V) + FREQ:50HZ , ((MOVOL:200V , MOVOL:460V) + CAPPRM:MHLW , (MOVOL:380V , MOVOL:460V) + CAPPRM:ASME) + FREQ:60HZ) + CAPPRE:IEC , (MOVOL:230V , MOVOL:460V , MOVOL:575V) + CAPPRE:ULCUL + CAPPRM:ASME + FREQ:60HZ) + COOL:AIR **(21/08/2018 - 11/12/2018)**	1X6
	1088 0039 37	1	END PLATE	**(20/07/2017 - 20/08/2018)** ((((CAPPRM:AS1210 , CAPPRM:CE , CAPPRM:MHLW , CAPPRM:MOM) + MOVOL:400V , CAPPRM:CE + MOVOL:500V , CAPPRM:MHLW + MOVOL:200V) + FREQ:50HZ , ((MOVOL:200V , MOVOL:460V) + CAPPRM:MHLW , (MOVOL:380V , MOVOL:460V) + CAPPRM:ASME) + FREQ:60HZ) + CAPPRE:IEC , (MOVOL:230V , MOVOL:460V , MOVOL:575V) + CAPPRE:ULCUL + CAPPRM:ASME + FREQ:60HZ) + COOL:AIR **(21/08/2018 - 11/12/2018)**	1X4
	1088 0039 37	1	END PLATE	**(20/07/2017 - 20/08/2018)** ((((CAPPRM:AS1210 , CAPPRM:CE , CAPPRM:MHLW , CAPPRM:MOM) + MOVOL:400V , CAPPRM:CE + MOVOL:500V , CAPPRM:MHLW + MOVOL:200V) + FREQ:50HZ , ((MOVOL:200V , MOVOL:460V) + CAPPRM:MHLW , (MOVOL:380V , MOVOL:460V) + CAPPRM:ASME) + FREQ:60HZ) + CAPPRE:IEC , (MOVOL:230V , MOVOL:460V , MOVOL:575V) + CAPPRE:ULCUL + CAPPRM:ASME + FREQ:60HZ) + COOL:AIR **(21/08/2018 - 11/12/2018)**	1X6

Legend:

CAPPRE:IEC - Component approval electrical:IEC
CAPPRM:ASME - Component approval mechanical:ASME
CAPPRM:MOM - Component approval mechanical:MOM
FREQ:60HZ - Frequency:60 Hz
MOVOL:200V - Supply voltage:200 V
MOVOL:400V - Supply voltage:400 V
MOVOL:575V - Supply voltage:575 V
CAPPRE:ULCUL - Component approval electrical:UL/cUL
CAPPRM:CE - Component approval mechanical:CE
COOL:AIR - Cooling:Air cooled
IDRY:N - Integrated dryer:No
MOVOL:230V - Supply voltage:230 V
MOVOL:460V - Supply voltage:460 V
CAPPRM:AS1210 - Component approval mechanical:AS1210
CAPPRM:MHLW - Component approval mechanical:MHLW
FREQ:50HZ - Frequency:50 Hz
MODEL:GA90VP_16 - Model:GA 90VSD+
MOVOL:380V - Supply voltage:380 V
MOVOL:500V - Supply voltage:500 V

21.14 - Cubicle components GA 90 VSD+ - (200V-380V-460V/60Hz - IEC, 230V-460V-575V/60Hz - UL-cUL, 200V-400V-500V/50Hz - IEC) - Pack (20/07/2017 - 11/12/2018)

((((CAPPRM:AS1210 , CAPPRM:CE , CAPPRM:MHLW , CAPPRM:MOM) + MOVOL:400V , CAPPRM:CE + COOL:AIR + MOVOL:500V) + FREQ:50HZ , ((MOVOL:380V , MOVOL:460V) + CAPPRM:ASME , CAPPRM:MHLW + MOVOL:460V) + FREQ:60HZ , CAPPRM:MHLW + COOL:AIR + MOVOL:200V) + CAPPRE:IEC , ((MOVOL:230V , MOVOL:575V) + COOL:AIR , MOVOL:460V) + CAPPRE:ULCUL + CAPPRM:ASME + FREQ:60HZ) + IDRY:N + MODEL:GA90VP_16

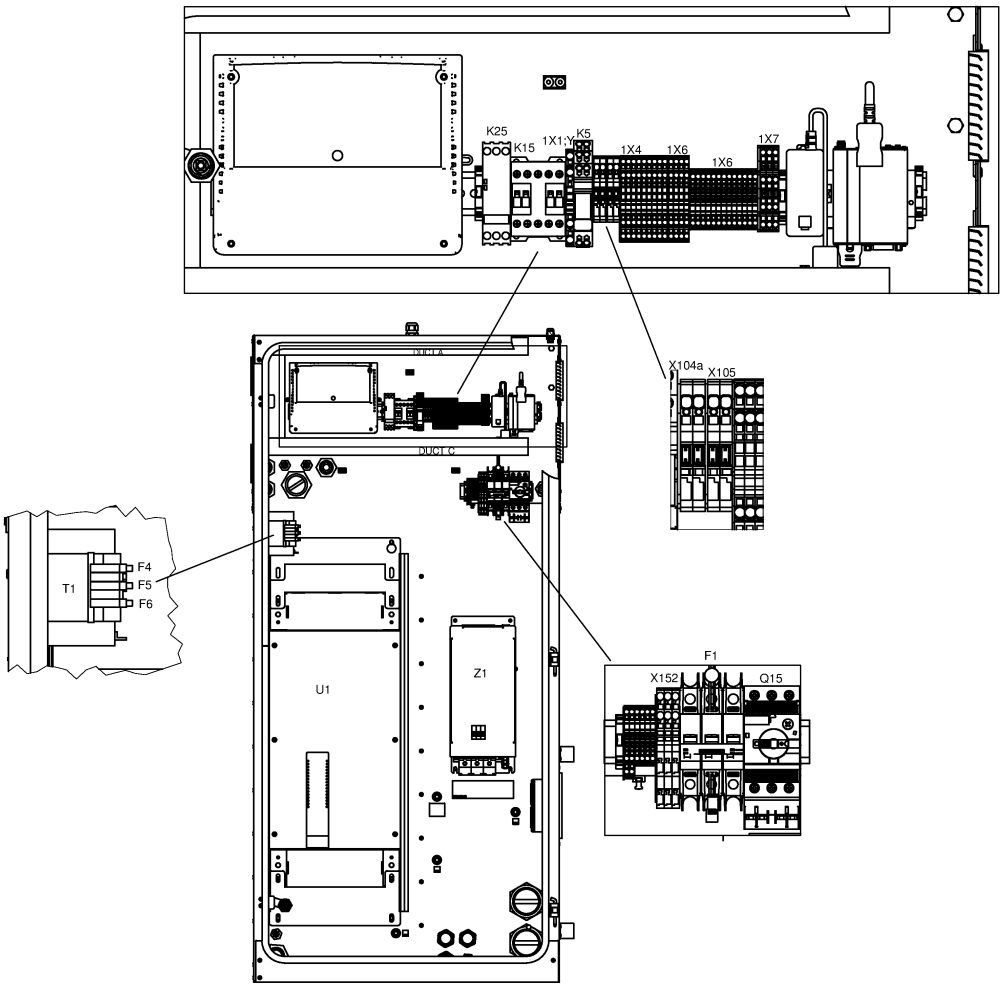

21.14 - Cubicle components GA 90 VSD+ - (200V-380V-460V/60Hz - IEC, 230V-460V-575V/60Hz - UL-cUL, 200V-400V-500V/50Hz - IEC) - Pack (20/07/2017 - 11/12/2018)

((((CAPPRM:AS1210 , CAPPRM:CE , CAPPRM:MHLW , CAPPRM:MOM) + MOVOL:400V , CAPPRM:CE + COOL:AIR + MOVOL:500V) + FREQ:50HZ , ((MOVOL:380V , MOVOL:460V) + CAPPRM:ASME , CAPPRM:MHLW + MOVOL:460V) + FREQ:60HZ , CAPPRM:MHLW + COOL:AIR + MOVOL:200V) + CAPPRE:IEC , ((MOVOL:230V , MOVOL:575V) + COOL:AIR , MOVOL:460V) + CAPPRE:ULCUL + CAPPRM:ASME + FREQ:60HZ) + IDRY:N + MODEL:GA90VP_16

Ref	Part Number	Qty	Name	Validity	EL
	1088 0039 37	1	END PLATE	**(20/07/2017 - 20/08/2018)** ((((CAPPRM:AS1210 , CAPPRM:CE , CAPPRM:MHLW , CAPPRM:MOM) + MOVOL:400V , CAPPRM:CE + MOVOL:500V , CAPPRM:MHLW + MOVOL:200V) + FREQ:50HZ , ((MOVOL:200V , MOVOL:460V) + CAPPRM:MHLW , (MOVOL:380V , MOVOL:460V) + CAPPRM:ASME) + FREQ:60HZ) + CAPPRE:IEC , (MOVOL:230V , MOVOL:460V , MOVOL:575V) + CAPPRE:ULCUL + CAPPRM:ASME + FREQ:60HZ) + COOL:AIR **(21/08/2018 - 11/12/2018)**	1X1:Y/D
	1088 0037 81	1	CONNECTOR	**(20/07/2017 - 20/08/2018)** ((((CAPPRM:AS1210 , CAPPRM:CE , CAPPRM:MHLW , CAPPRM:MOM) + MOVOL:400V , CAPPRM:CE + MOVOL:500V , CAPPRM:MHLW + MOVOL:200V) + FREQ:50HZ , ((MOVOL:200V , MOVOL:460V) + CAPPRM:MHLW , (MOVOL:380V , MOVOL:460V) + CAPPRM:ASME) + FREQ:60HZ) + CAPPRE:IEC , (MOVOL:230V , MOVOL:460V , MOVOL:575V) + CAPPRE:ULCUL + CAPPRM:ASME + FREQ:60HZ) + COOL:AIR **(21/08/2018 - 11/12/2018)**	2X27
	1088 0037 80	1	CONNECTOR	**(20/07/2017 - 20/08/2018)** ((((CAPPRM:AS1210 , CAPPRM:CE , CAPPRM:MHLW , CAPPRM:MOM) + MOVOL:400V , CAPPRM:CE + MOVOL:500V , CAPPRM:MHLW + MOVOL:200V) + FREQ:50HZ , ((MOVOL:200V , MOVOL:460V) + CAPPRM:MHLW , (MOVOL:380V , MOVOL:460V) + CAPPRM:ASME) + FREQ:60HZ) + CAPPRE:IEC , (MOVOL:230V , MOVOL:460V , MOVOL:575V) + CAPPRE:ULCUL + CAPPRM:ASME + FREQ:60HZ) + COOL:AIR **(21/08/2018 - 11/12/2018)**	2X28
	1088 0031 32	1	CONNECTOR	**(20/07/2017 - 20/08/2018)** ((((CAPPRM:AS1210 , CAPPRM:CE , CAPPRM:MHLW , CAPPRM:MOM) + MOVOL:400V , CAPPRM:CE + MOVOL:500V , CAPPRM:MHLW + MOVOL:200V) + FREQ:50HZ , ((MOVOL:200V , MOVOL:460V) + CAPPRM:MHLW , (MOVOL:380V , MOVOL:460V) + CAPPRM:ASME) + FREQ:60HZ) + CAPPRE:IEC , (MOVOL:230V , MOVOL:460V , MOVOL:575V) + CAPPRE:ULCUL + CAPPRM:ASME + FREQ:60HZ) + COOL:AIR **(21/08/2018 - 11/12/2018)**	2X30
	1088 0031 26	1	CONNECTOR 6-POLE	**(20/07/2017 - 20/08/2018)** ((((CAPPRM:AS1210 , CAPPRM:CE , CAPPRM:MHLW , CAPPRM:MOM) + MOVOL:400V , CAPPRM:CE + MOVOL:500V , CAPPRM:MHLW + MOVOL:200V) + FREQ:50HZ , ((MOVOL:200V , MOVOL:460V) + CAPPRM:MHLW , (MOVOL:380V , MOVOL:460V) + CAPPRM:ASME) + FREQ:60HZ) + CAPPRE:IEC , (MOVOL:230V , MOVOL:460V , MOVOL:575V) + CAPPRE:ULCUL + CAPPRM:ASME + FREQ:60HZ) + COOL:AIR **(21/08/2018 - 11/12/2018)**	2X31
	~~1089 9664 06~~	1	SWITCH	**(20/07/2017 - 20/08/2018)** ((((CAPPRM:AS1210 , CAPPRM:CE , CAPPRM:MHLW , CAPPRM:MOM) + MOVOL:400V , CAPPRM:CE + MOVOL:500V , CAPPRM:MHLW + MOVOL:200V) + FREQ:50HZ , ((MOVOL:200V , MOVOL:460V) + CAPPRM:MHLW , (MOVOL:380V , MOVOL:460V) + CAPPRM:ASME) + FREQ:60HZ) + CAPPRE:IEC , (MOVOL:230V , MOVOL:460V , MOVOL:575V) + CAPPRE:ULCUL + CAPPRM:ASME + FREQ:60HZ) + COOL:AIR **(21/08/2018 - 11/12/2018)**	Q15
	Substituted by:		1089 9551 97 - AUX.CONTACT CIRCUIT BREAKER (quantity: 1)		

Legend:

CAPPRE:IEC - Component approval electrical:IEC
CAPPRE:ULCUL - Component approval electrical:UL/cUL
CAPPRM:AS1210 - Component approval mechanical:AS1210
CAPPRM:ASME - Component approval mechanical:ASME
CAPPRM:CE - Component approval mechanical:CE
CAPPRM:MHLW - Component approval mechanical:MHLW
CAPPRM:MOM - Component approval mechanical:MOM
COOL:AIR - Cooling:Air cooled
FREQ:50HZ - Frequency:50 Hz
FREQ:60HZ - Frequency:60 Hz
IDRY:N - Integrated dryer:No
MODEL:GA90VP_16 - Model:GA 90VSD+
MOVOL:200V - Supply voltage:200 V
MOVOL:230V - Supply voltage:230 V
MOVOL:380V - Supply voltage:380 V
MOVOL:400V - Supply voltage:400 V
MOVOL:460V - Supply voltage:460 V
MOVOL:500V - Supply voltage:500 V
MOVOL:575V - Supply voltage:575 V

21.14 - Cubicle components GA 90 VSD+ - (200V-380V-460V/60Hz - IEC, 230V-460V-575V/60Hz - UL-cUL, 200V-400V-500V/50Hz - IEC) - Pack (20/07/2017 - 11/12/2018)

((((CAPPRM:AS1210 , CAPPRM:CE , CAPPRM:MHLW , CAPPRM:MOM) + MOVOL:400V , CAPPRM:CE + COOL:AIR + MOVOL:500V) + FREQ:50HZ , ((MOVOL:380V , MOVOL:460V) + CAPPRM:ASME , CAPPRM:MHLW + MOVOL:460V) + FREQ:60HZ , CAPPRM:MHLW + COOL:AIR + MOVOL:200V) + CAPPRE:IEC , ((MOVOL:230V , MOVOL:575V) + COOL:AIR , MOVOL:460V) + CAPPRE:ULCUL + CAPPRM:ASME + FREQ:60HZ) + IDRY:N + MODEL:GA90VP_16

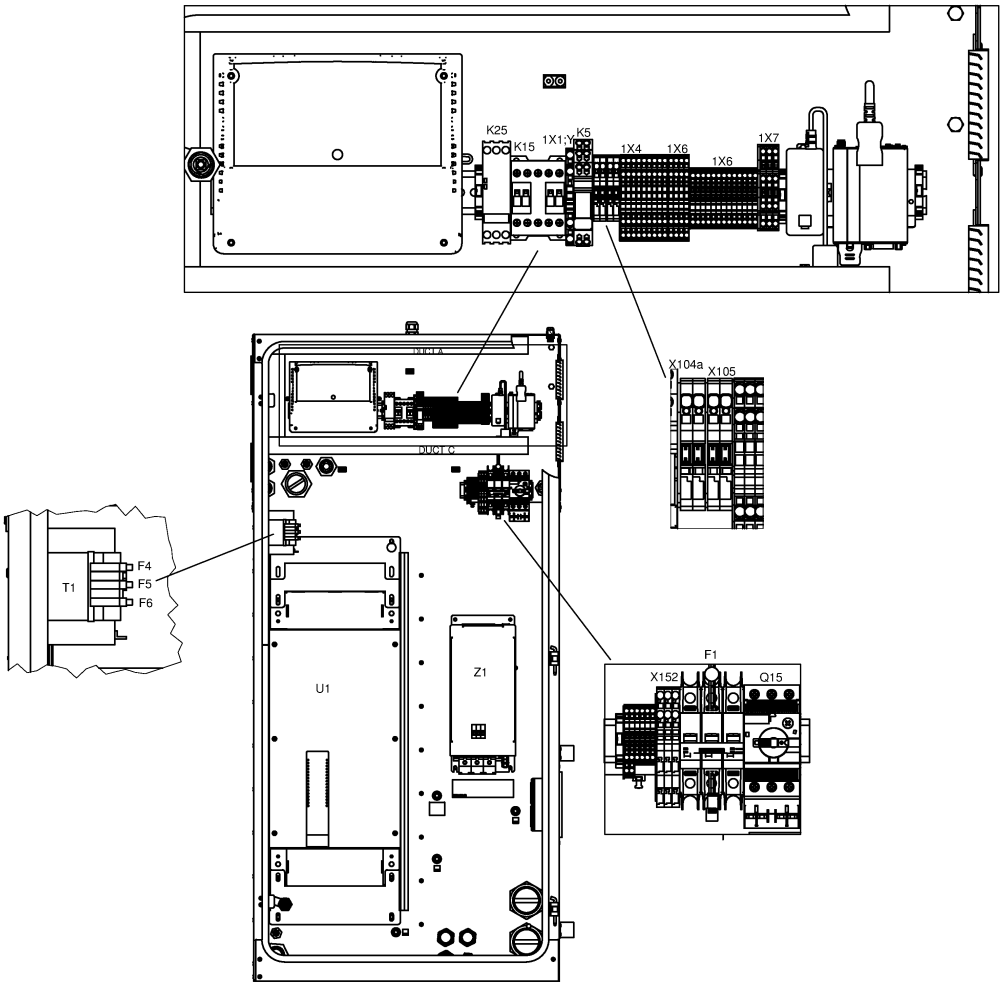

21.14 - Cubicle components GA 90 VSD+ - (200V-380V-460V/60Hz - IEC, 230V-460V-575V/60Hz - UL-cUL, 200V-400V-500V/50Hz - IEC) - Pack (20/07/2017 - 11/12/2018)

((((CAPPRM:AS1210 , CAPPRM:CE , CAPPRM:MHLW , CAPPRM:MOM) + MOVOL:400V , CAPPRM:CE + COOL:AIR + MOVOL:500V) + FREQ:50HZ , ((MOVOL:380V , MOVOL:460V) + CAPPRM:ASME , CAPPRM:MHLW + MOVOL:460V) + FREQ:60HZ , CAPPRM:MHLW + COOL:AIR + MOVOL:200V) + CAPPRE:IEC , ((MOVOL:230V , MOVOL:575V) + COOL:AIR , MOVOL:460V) + CAPPRE:ULCUL + CAPPRM:ASME + FREQ:60HZ) + IDRY:N + MODEL:GA90VP_16

Ref	Part Number	Qty	Name	Validity	EL
	1089 9551 18	1	CIRCUIT BREAKER	**(20/07/2017 - 20/08/2018)** ((((CAPPRM:AS1210 , CAPPRM:CE , CAPPRM:MHLW , CAPPRM:MOM) + MOVOL:400V , CAPPRM:CE + MOVOL:500V , CAPPRM:MHLW + MOVOL:200V) + FREQ:50HZ , ((MOVOL:200V , MOVOL:460V) + CAPPRM:MHLW , (MOVOL:380V , MOVOL:460V) + CAPPRM:ASME) + FREQ:60HZ) + CAPPRE:IEC , (MOVOL:230V , MOVOL:460V , MOVOL:575V) + CAPPRE:ULCUL + CAPPRM:ASME + FREQ:60HZ) + COOL:AIR **(21/08/2018 - 11/12/2018)**	Q15
	1088 0038 26	1	TERMINAL	**(20/07/2017 - 20/08/2018)** ((((CAPPRM:AS1210 , CAPPRM:CE , CAPPRM:MHLW , CAPPRM:MOM) + MOVOL:400V , CAPPRM:CE + MOVOL:500V , CAPPRM:MHLW + MOVOL:200V) + FREQ:50HZ , ((MOVOL:200V , MOVOL:460V) + CAPPRM:MHLW , (MOVOL:380V , MOVOL:460V) + CAPPRM:ASME) + FREQ:60HZ) + CAPPRE:IEC , (MOVOL:230V , MOVOL:460V , MOVOL:575V) + CAPPRE:ULCUL + CAPPRM:ASME + FREQ:60HZ) + COOL:AIR **(21/08/2018 - 11/12/2018)**	1X1:Y/D
	1089 9602 79	1	CONTACTOR 110 V	**(20/07/2017 - 20/08/2018)** ((((CAPPRM:AS1210 , CAPPRM:CE , CAPPRM:MHLW , CAPPRM:MOM) + MOVOL:400V , CAPPRM:CE + MOVOL:500V , CAPPRM:MHLW + MOVOL:200V) + FREQ:50HZ , ((MOVOL:200V , MOVOL:460V) + CAPPRM:MHLW , (MOVOL:380V , MOVOL:460V) + CAPPRM:ASME) + FREQ:60HZ) + CAPPRE:IEC , (MOVOL:230V , MOVOL:460V , MOVOL:575V) + CAPPRE:ULCUL + CAPPRM:ASME + FREQ:60HZ) + COOL:AIR **(21/08/2018 - 11/12/2018)**	K15
	1089 9461 26	1	PHASE SEQUENCE RELAY	**(20/07/2017 - 20/08/2018)** ((((CAPPRM:AS1210 , CAPPRM:CE , CAPPRM:MHLW , CAPPRM:MOM) + MOVOL:400V , CAPPRM:CE + MOVOL:500V , CAPPRM:MHLW + MOVOL:200V) + FREQ:50HZ , ((MOVOL:200V , MOVOL:460V) + CAPPRM:MHLW , (MOVOL:380V , MOVOL:460V) + CAPPRM:ASME) + FREQ:60HZ) + CAPPRE:IEC , (MOVOL:230V , MOVOL:460V , MOVOL:575V) + CAPPRE:ULCUL + CAPPRM:ASME + FREQ:60HZ) + COOL:AIR **(21/08/2018 - 11/12/2018)**	K25
	1088 0032 17	1	RELAY 115 VAC	**(20/07/2017 - 20/08/2018)** ((((CAPPRM:AS1210 , CAPPRM:CE , CAPPRM:MHLW , CAPPRM:MOM) + MOVOL:400V , CAPPRM:CE + MOVOL:500V , CAPPRM:MHLW + MOVOL:200V) + FREQ:50HZ , ((MOVOL:200V , MOVOL:460V) + CAPPRM:MHLW , (MOVOL:380V , MOVOL:460V) + CAPPRM:ASME) + FREQ:60HZ) + CAPPRE:IEC , (MOVOL:230V , MOVOL:460V , MOVOL:575V) + CAPPRE:ULCUL + CAPPRM:ASME + FREQ:60HZ) + COOL:AIR **(21/08/2018 - 11/12/2018)**	K5
	0991 8011 21	AR	CABLE TRAY	**(20/07/2017 - 20/08/2018)** ((((CAPPRM:AS1210 , CAPPRM:CE , CAPPRM:MHLW , CAPPRM:MOM) + MOVOL:400V , CAPPRM:CE + MOVOL:500V , CAPPRM:MHLW + MOVOL:200V) + FREQ:50HZ , ((MOVOL:200V , MOVOL:460V) + CAPPRM:MHLW , (MOVOL:380V , MOVOL:460V) + CAPPRM:ASME) + FREQ:60HZ) + CAPPRE:IEC , (MOVOL:230V , MOVOL:460V , MOVOL:575V) + CAPPRE:ULCUL + CAPPRM:ASME + FREQ:60HZ) + COOL:AIR **(21/08/2018 - 11/12/2018)**	L=1384mm

Legend:

CAPPRE:IEC - Component approval electrical:IEC
CAPPRM:ASME - Component approval mechanical:ASME
CAPPRM:MOM - Component approval mechanical:MOM
FREQ:60HZ - Frequency:60 Hz
MOVOL:200V - Supply voltage:200 V
MOVOL:400V - Supply voltage:400 V
MOVOL:575V - Supply voltage:575 V
CAPPRE:ULCUL - Component approval electrical:UL/cUL
CAPPRM:CE - Component approval mechanical:CE
COOL:AIR - Cooling:Air cooled
IDRY:N - Integrated dryer:No
MOVOL:230V - Supply voltage:230 V
MOVOL:460V - Supply voltage:460 V
CAPPRM:AS1210 - Component approval mechanical:AS1210
CAPPRM:MHLW - Component approval mechanical:MHLW
FREQ:50HZ - Frequency:50 Hz
MODEL:GA90VP_16 - Model:GA 90VSD+
MOVOL:380V - Supply voltage:380 V
MOVOL:500V - Supply voltage:500 V

21.14 - Cubicle components GA 90 VSD+ - (200V-380V-460V/60Hz - IEC, 230V-460V-575V/60Hz - UL-cUL, 200V-400V-500V/50Hz - IEC) - Pack (20/07/2017 - 11/12/2018)

((((CAPPRM:AS1210 , CAPPRM:CE , CAPPRM:MHLW , CAPPRM:MOM) + MOVOL:400V , CAPPRM:CE + COOL:AIR + MOVOL:500V) + FREQ:50HZ , ((MOVOL:380V , MOVOL:460V) + CAPPRM:ASME , CAPPRM:MHLW + MOVOL:460V) + FREQ:60HZ , CAPPRM:MHLW + COOL:AIR + MOVOL:200V) + CAPPRE:IEC , ((MOVOL:230V , MOVOL:575V) + COOL:AIR , MOVOL:460V) + CAPPRE:ULCUL + CAPPRM:ASME + FREQ:60HZ) + IDRY:N + MODEL:GA90VP_16

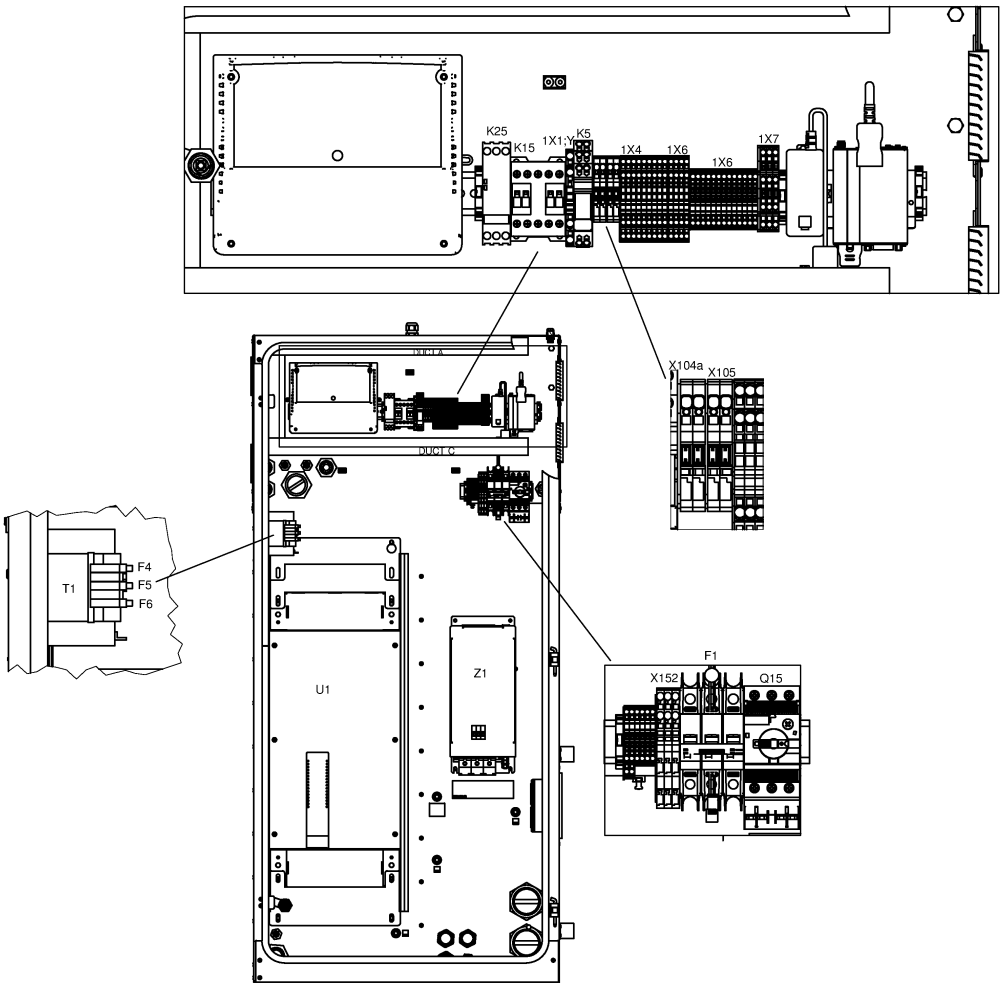

21.14 - Cubicle components GA 90 VSD+ - (200V-380V-460V/60Hz - IEC, 230V-460V-575V/60Hz - UL-cUL, 200V-400V-500V/50Hz - IEC) - Pack (20/07/2017 - 11/12/2018)

((((CAPPRM:AS1210 , CAPPRM:CE , CAPPRM:MHLW , CAPPRM:MOM) + MOVOL:400V , CAPPRM:CE + COOL:AIR + MOVOL:500V) + FREQ:50HZ , ((MOVOL:380V , MOVOL:460V) + CAPPRM:ASME , CAPPRM:MHLW + MOVOL:460V) + FREQ:60HZ , CAPPRM:MHLW + COOL:AIR + MOVOL:200V) + CAPPRE:IEC , ((MOVOL:230V , MOVOL:575V) + COOL:AIR , MOVOL:460V) + CAPPRE:ULCUL + CAPPRM:ASME + FREQ:60HZ) + IDRY:N + MODEL:GA90VP_16

Ref	Part Number	Qty	Name	Validity	EL
	0697 9811 16	1	PLUG	**(20/07/2017 - 20/08/2018)** ((((CAPPRM:AS1210 , CAPPRM:CE , CAPPRM:MHLW , CAPPRM:MOM) + MOVOL:400V , CAPPRM:CE + MOVOL:500V , CAPPRM:MHLW + MOVOL:200V) + FREQ:50HZ , ((MOVOL:200V , MOVOL:460V) + CAPPRM:MHLW , (MOVOL:380V , MOVOL:460V) + CAPPRM:ASME) + FREQ:60HZ) + CAPPRE:IEC , (MOVOL:230V , MOVOL:460V , MOVOL:575V) + CAPPRE:ULCUL + CAPPRM:ASME + FREQ:60HZ) + COOL:AIR **(21/08/2018 - 11/12/2018)**	
	Electrical legend:	Plug for Dryer			
	0989 3700 47	1	LOCKNUT	**(20/07/2017 - 20/08/2018)** ((((CAPPRM:AS1210 , CAPPRM:CE , CAPPRM:MHLW , CAPPRM:MOM) + MOVOL:400V , CAPPRM:CE + MOVOL:500V , CAPPRM:MHLW + MOVOL:200V) + FREQ:50HZ , ((MOVOL:200V , MOVOL:460V) + CAPPRM:MHLW , (MOVOL:380V , MOVOL:460V) + CAPPRM:ASME) + FREQ:60HZ) + CAPPRE:IEC , (MOVOL:230V , MOVOL:460V , MOVOL:575V) + CAPPRE:ULCUL + CAPPRM:ASME + FREQ:60HZ) + COOL:AIR **(21/08/2018 - 11/12/2018)**	
	Electrical legend:	Locknut for dryer			
	0697 9811 11	2	PLUG	**(20/07/2017 - 20/08/2018)** ((((CAPPRM:AS1210 , CAPPRM:CE , CAPPRM:MHLW , CAPPRM:MOM) + MOVOL:400V , CAPPRM:CE + MOVOL:500V , CAPPRM:MHLW + MOVOL:200V) + FREQ:50HZ , ((MOVOL:200V , MOVOL:460V) + CAPPRM:MHLW , (MOVOL:380V , MOVOL:460V) + CAPPRM:ASME) + FREQ:60HZ) + CAPPRE:IEC , (MOVOL:230V , MOVOL:460V , MOVOL:575V) + CAPPRE:ULCUL + CAPPRM:ASME + FREQ:60HZ) + COOL:AIR **(21/08/2018 - 11/12/2018)**	
	Electrical legend:	Plug for FF Drain/LAT			
	0989 3700 42	2	NUT	**(20/07/2017 - 20/08/2018)** ((((CAPPRM:AS1210 , CAPPRM:CE , CAPPRM:MHLW , CAPPRM:MOM) + MOVOL:400V , CAPPRM:CE + MOVOL:500V , CAPPRM:MHLW + MOVOL:200V) + FREQ:50HZ , ((MOVOL:200V , MOVOL:460V) + CAPPRM:MHLW , (MOVOL:380V , MOVOL:460V) + CAPPRM:ASME) + FREQ:60HZ) + CAPPRE:IEC , (MOVOL:230V , MOVOL:460V , MOVOL:575V) + CAPPRE:ULCUL + CAPPRM:ASME + FREQ:60HZ) + COOL:AIR **(21/08/2018 - 11/12/2018)**	
	Electrical legend:	Locknut for FF Drain/LAT			
	1088 0031 13	1	CONNECTOR 13-POLE	**(20/07/2017 - 20/08/2018)** ((((CAPPRM:AS1210 , CAPPRM:CE , CAPPRM:MHLW , CAPPRM:MOM) + MOVOL:400V , CAPPRM:CE + MOVOL:500V , CAPPRM:MHLW + MOVOL:200V) + FREQ:50HZ , ((MOVOL:200V , MOVOL:460V) + CAPPRM:MHLW , (MOVOL:380V , MOVOL:460V) + CAPPRM:ASME) + FREQ:60HZ) + CAPPRE:IEC , (MOVOL:230V , MOVOL:460V , MOVOL:575V) + CAPPRE:ULCUL + CAPPRM:ASME + FREQ:60HZ) + COOL:AIR **(21/08/2018 - 11/12/2018)**	1X30

Legend:

CAPPRE:IEC - Component approval electrical:IEC
CAPPRE:ULCUL - Component approval electrical:UL/cUL
CAPPRM:AS1210 - Component approval mechanical:AS1210
CAPPRM:ASME - Component approval mechanical:ASME
CAPPRM:CE - Component approval mechanical:CE
CAPPRM:MHLW - Component approval mechanical:MHLW
CAPPRM:MOM - Component approval mechanical:MOM
COOL:AIR - Cooling:Air cooled
FREQ:50HZ - Frequency:50 Hz
FREQ:60HZ - Frequency:60 Hz
IDRY:N - Integrated dryer:No
MODEL:GA90VP_16 - Model:GA 90VSD+
MOVOL:200V - Supply voltage:200 V
MOVOL:230V - Supply voltage:230 V
MOVOL:380V - Supply voltage:380 V
MOVOL:400V - Supply voltage:400 V
MOVOL:460V - Supply voltage:460 V
MOVOL:500V - Supply voltage:500 V
MOVOL:575V - Supply voltage:575 V

21.14 - Cubicle components GA 90 VSD+ - (200V-380V-460V/60Hz - IEC, 230V-460V-575V/60Hz - UL-cUL, 200V-400V-500V/50Hz - IEC) - Pack (20/07/2017 - 11/12/2018)

((((CAPPRM:AS1210 , CAPPRM:CE , CAPPRM:MHLW , CAPPRM:MOM) + MOVOL:400V , CAPPRM:CE + COOL:AIR + MOVOL:500V) + FREQ:50HZ , ((MOVOL:380V , MOVOL:460V) + CAPPRM:ASME , CAPPRM:MHLW + MOVOL:460V) + FREQ:60HZ , CAPPRM:MHLW + COOL:AIR + MOVOL:200V) + CAPPRE:IEC , ((MOVOL:230V , MOVOL:575V) + COOL:AIR , MOVOL:460V) + CAPPRE:ULCUL + CAPPRM:ASME + FREQ:60HZ) + IDRY:N + MODEL:GA90VP_16

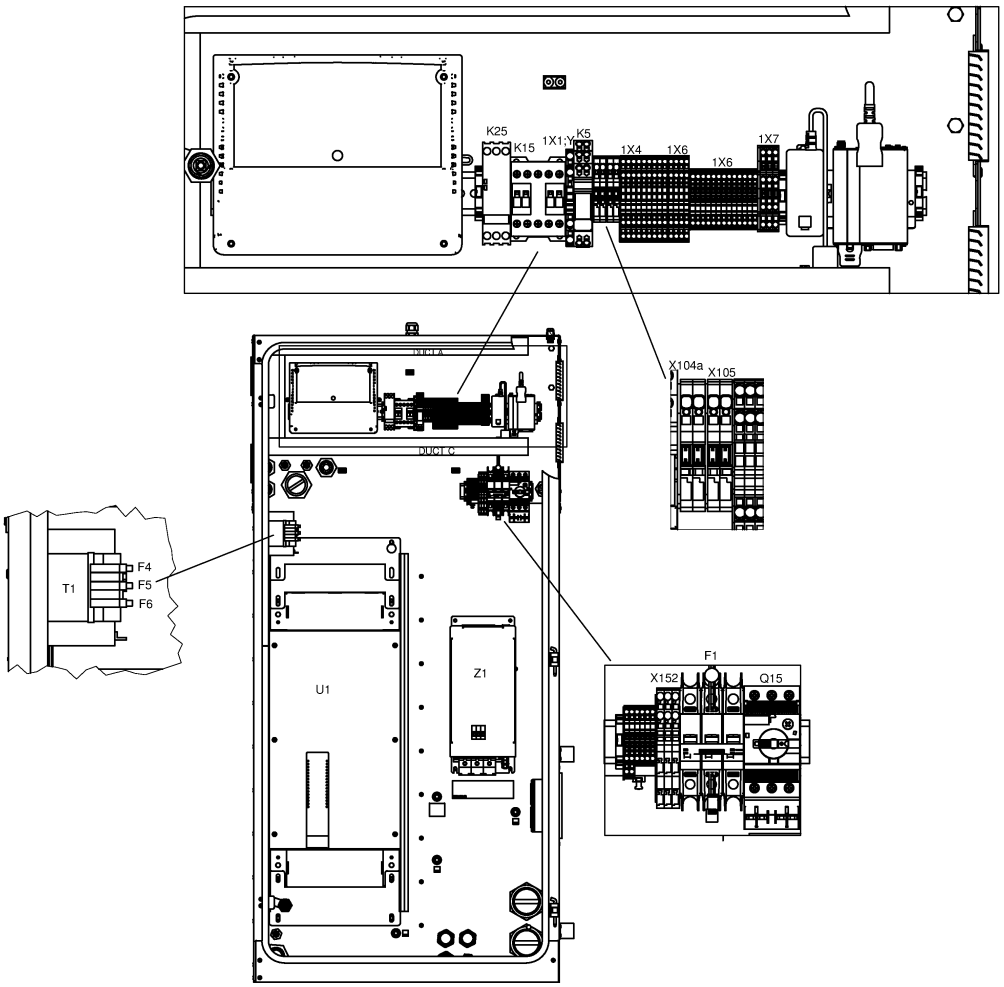

21.14 - Cubicle components GA 90 VSD+ - (200V-380V-460V/60Hz - IEC, 230V-460V-575V/60Hz - UL-cUL, 200V-400V-500V/50Hz - IEC) - Pack (20/07/2017 - 11/12/2018)

((((CAPPRM:AS1210 , CAPPRM:CE , CAPPRM:MHLW , CAPPRM:MOM) + MOVOL:400V , CAPPRM:CE + COOL:AIR + MOVOL:500V) + FREQ:50HZ , ((MOVOL:380V , MOVOL:460V) + CAPPRM:ASME , CAPPRM:MHLW + MOVOL:460V) + FREQ:60HZ , CAPPRM:MHLW + COOL:AIR + MOVOL:200V) + CAPPRE:IEC , ((MOVOL:230V , MOVOL:575V) + COOL:AIR , MOVOL:460V) + CAPPRE:ULCUL + CAPPRM:ASME + FREQ:60HZ) + IDRY:N + MODEL:GA90VP_16

Ref	Part Number	Qty	Name	Validity	EL
	1088 0037 82	1	CONNECTOR	**(20/07/2017 - 20/08/2018)** ((((CAPPRM:AS1210 , CAPPRM:CE , CAPPRM:MHLW , CAPPRM:MOM) + MOVOL:400V , CAPPRM:CE + MOVOL:500V , CAPPRM:MHLW + MOVOL:200V) + FREQ:50HZ , ((MOVOL:200V , MOVOL:460V) + CAPPRM:MHLW , (MOVOL:380V , MOVOL:460V) + CAPPRM:ASME) + FREQ:60HZ) + CAPPRE:IEC , (MOVOL:230V , MOVOL:460V , MOVOL:575V) + CAPPRE:ULCUL + CAPPRM:ASME + FREQ:60HZ) + COOL:AIR **(21/08/2018 - 11/12/2018)**	3X34
	0697 9811 13	1	PLUG	**(20/07/2017 - 20/08/2018)** ((((CAPPRM:AS1210 , CAPPRM:CE , CAPPRM:MHLW , CAPPRM:MOM) + MOVOL:400V , CAPPRM:CE + MOVOL:500V , CAPPRM:MHLW + MOVOL:200V) + FREQ:50HZ , ((MOVOL:200V , MOVOL:460V) + CAPPRM:MHLW , (MOVOL:380V , MOVOL:460V) + CAPPRM:ASME) + FREQ:60HZ) + CAPPRE:IEC , (MOVOL:230V , MOVOL:460V , MOVOL:575V) + CAPPRE:ULCUL + CAPPRM:ASME + FREQ:60HZ) + COOL:AIR **(21/08/2018 - 11/12/2018)**	
	Electrical legend:	Energy recovery			
	0989 3700 44	1	LOCKNUT	**(20/07/2017 - 20/08/2018)** ((((CAPPRM:AS1210 , CAPPRM:CE , CAPPRM:MHLW , CAPPRM:MOM) + MOVOL:400V , CAPPRM:CE + MOVOL:500V , CAPPRM:MHLW + MOVOL:200V) + FREQ:50HZ , ((MOVOL:200V , MOVOL:460V) + CAPPRM:MHLW , (MOVOL:380V , MOVOL:460V) + CAPPRM:ASME) + FREQ:60HZ) + CAPPRE:IEC , (MOVOL:230V , MOVOL:460V , MOVOL:575V) + CAPPRE:ULCUL + CAPPRM:ASME + FREQ:60HZ) + COOL:AIR **(21/08/2018 - 11/12/2018)**	
	Electrical legend:	Energy recovery			
	0697 9811 12	1	PLUG	**(20/07/2017 - 20/08/2018)** ((((CAPPRM:AS1210 , CAPPRM:CE , CAPPRM:MHLW , CAPPRM:MOM) + MOVOL:400V , CAPPRM:CE + MOVOL:500V , CAPPRM:MHLW + MOVOL:200V) + FREQ:50HZ , ((MOVOL:200V , MOVOL:460V) + CAPPRM:MHLW , (MOVOL:380V , MOVOL:460V) + CAPPRM:ASME) + FREQ:60HZ) + CAPPRE:IEC , (MOVOL:230V , MOVOL:460V , MOVOL:575V) + CAPPRE:ULCUL + CAPPRM:ASME + FREQ:60HZ) + COOL:AIR **(21/08/2018 - 11/12/2018)**	
	Electrical legend:	Control circuit of T10			
	0989 3700 43	1	NUT	**(20/07/2017 - 20/08/2018)** ((((CAPPRM:AS1210 , CAPPRM:CE , CAPPRM:MHLW , CAPPRM:MOM) + MOVOL:400V , CAPPRM:CE + MOVOL:500V , CAPPRM:MHLW + MOVOL:200V) + FREQ:50HZ , ((MOVOL:200V , MOVOL:460V) + CAPPRM:MHLW , (MOVOL:380V , MOVOL:460V) + CAPPRM:ASME) + FREQ:60HZ) + CAPPRE:IEC , (MOVOL:230V , MOVOL:460V , MOVOL:575V) + CAPPRE:ULCUL + CAPPRM:ASME + FREQ:60HZ) + COOL:AIR **(21/08/2018 - 11/12/2018)**	
	Electrical legend:	Control circuit of T10			

Legend:

CAPPRE:IEC - Component approval electrical:IEC
CAPPRE:ULCUL - Component approval electrical:UL/cUL
CAPPRM:AS1210 - Component approval mechanical:AS1210
CAPPRM:ASME - Component approval mechanical:ASME
CAPPRM:CE - Component approval mechanical:CE
CAPPRM:MHLW - Component approval mechanical:MHLW
CAPPRM:MOM - Component approval mechanical:MOM
COOL:AIR - Cooling:Air cooled
FREQ:50HZ - Frequency:50 Hz
FREQ:60HZ - Frequency:60 Hz
IDRY:N - Integrated dryer:No
MODEL:GA90VP_16 - Model:GA 90VSD+
MOVOL:200V - Supply voltage:200 V
MOVOL:230V - Supply voltage:230 V
MOVOL:380V - Supply voltage:380 V
MOVOL:400V - Supply voltage:400 V
MOVOL:460V - Supply voltage:460 V
MOVOL:500V - Supply voltage:500 V
MOVOL:575V - Supply voltage:575 V

21.15 - Cubicle components GA 90 VSD+ - (200V-380V-460V/60Hz - IEC, 230V-460V-575V/60Hz - UL-cUL, 200V-400V-500V/50Hz - IEC) - Pack (12/12/2018 - 16/12/2019)

((((CAPPRM:AS1210 , CAPPRM:CE , CAPPRM:MHLW , CAPPRM:MOM) + MOVOL:400V , CAPPRM:CE + COOL:AIR + MOVOL:500V) + FREQ:50HZ , ((MOVOL:380V , MOVOL:460V) + CAPPRM:ASME , CAPPRM:MHLW + MOVOL:460V) + FREQ:60HZ , CAPPRM:MHLW + COOL:AIR + MOVOL:200V) + CAPPRE:IEC , ((MOVOL:230V , MOVOL:575V) + COOL:AIR , MOVOL:460V) + CAPPRE:ULCUL + CAPPRM:ASME + FREQ:60HZ) + IDRY:N + MODEL:GA90VP_16

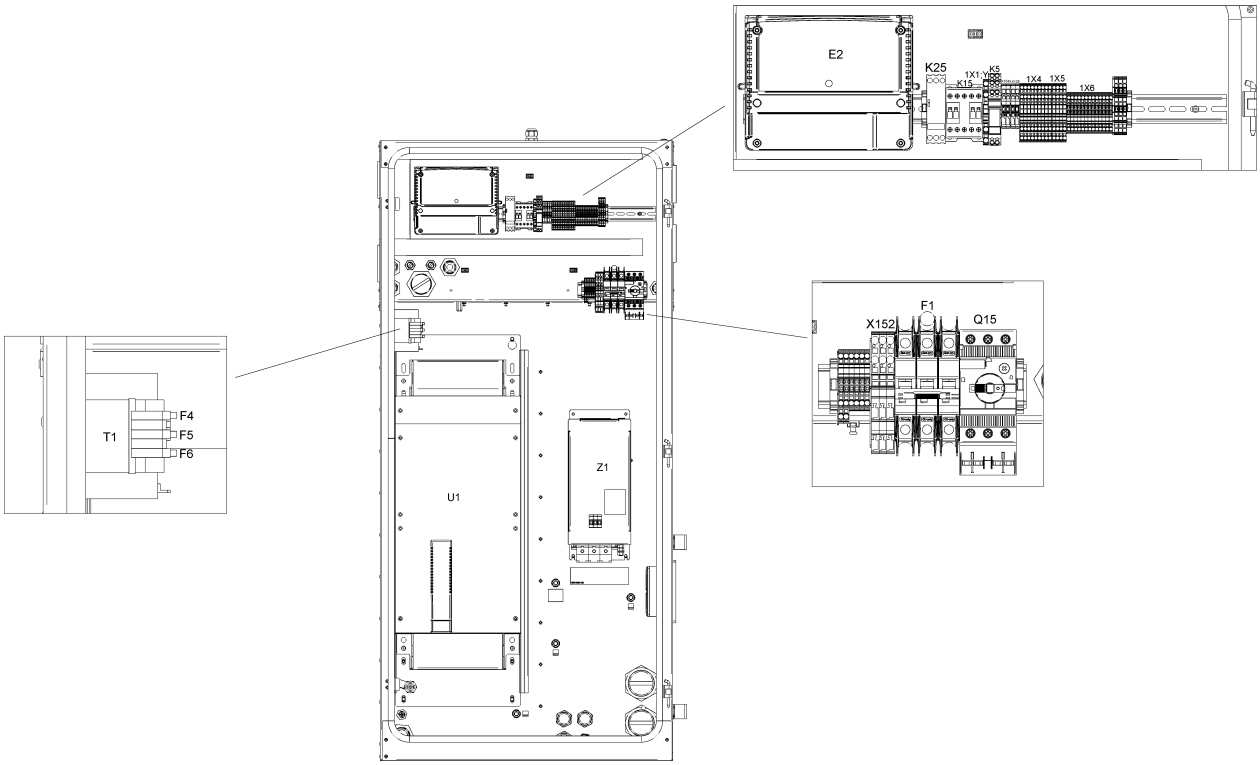

21.15 - Cubicle components GA 90 VSD+ - (200V-380V-460V/60Hz - IEC, 230V-460V-575V/60Hz - UL-cUL, 200V-400V-500V/50Hz - IEC) - Pack (12/12/2018 - 16/12/2019)

((((CAPPRM:AS1210 , CAPPRM:CE , CAPPRM:MHLW , CAPPRM:MOM) + MOVOL:400V , CAPPRM:CE + COOL:AIR + MOVOL:500V) + FREQ:50HZ , ((MOVOL:380V , MOVOL:460V) + CAPPRM:ASME , CAPPRM:MHLW + MOVOL:460V) + FREQ:60HZ , CAPPRM:MHLW + COOL:AIR + MOVOL:200V) + CAPPRE:IEC , ((MOVOL:230V , MOVOL:575V) + COOL:AIR , MOVOL:460V) + CAPPRE:ULCUL + CAPPRM:ASME + FREQ:60HZ) + IDRY:N + MODEL:GA90VP_16

Ref	Part Number	Qty	Name	Validity	EL
	1900 2202 26	1	CUBICLE	**(12/12/2018 - 16/12/2019)**	
	9820 3000 31	1	ASSEMBLY DRAWING	**(12/12/2018 - 24/02/2019)** **(25/02/2019 - 05/12/2019)** ((((CAPPRM:AS1210 , CAPPRM:CE , CAPPRM:MHLW , CAPPRM:MOM) + MOVOL:400V , CAPPRM:CE + MOVOL:500V , CAPPRM:MHLW + MOVOL:200V) + FREQ:50HZ , ((MOVOL:200V , MOVOL:460V) + CAPPRM:MHLW , (MOVOL:380V , MOVOL:460V) + CAPPRM:ASME) + FREQ:60HZ) + CAPPRE:IEC , (MOVOL:230V , MOVOL:460V , MOVOL:575V) + CAPPRE:ULCUL + CAPPRM:ASME + FREQ:60HZ) + COOL:AIR **(06/12/2019 - 16/12/2019)** ((((CAPPRM:AS1210 , CAPPRM:CE , CAPPRM:MHLW , CAPPRM:MOM) + MOVOL:400V , CAPPRM:MHLW + MOVOL:200V) + FREQ:50HZ , ((MOVOL:200V , MOVOL:460V) + CAPPRM:MHLW , (MOVOL:380V , MOVOL:460V) + CAPPRM:ASME) + FREQ:60HZ) + CAPPRE:IEC , (MOVOL:230V , MOVOL:460V , MOVOL:575V) + CAPPRE:ULCUL + CAPPRM:ASME + FREQ:60HZ) + COOL:AIR	AD
	9820 3000 27	1	SERVICE DIAGRAM	**(12/12/2018 - 24/02/2019)** **(25/02/2019 - 05/12/2019)** ((((CAPPRM:AS1210 , CAPPRM:CE , CAPPRM:MHLW , CAPPRM:MOM) + MOVOL:400V , CAPPRM:CE + MOVOL:500V , CAPPRM:MHLW + MOVOL:200V) + FREQ:50HZ , ((MOVOL:200V , MOVOL:460V) + CAPPRM:MHLW , (MOVOL:380V , MOVOL:460V) + CAPPRM:ASME) + FREQ:60HZ) + CAPPRE:IEC , (MOVOL:230V , MOVOL:460V , MOVOL:575V) + CAPPRE:ULCUL + CAPPRM:ASME + FREQ:60HZ) + COOL:AIR **(06/12/2019 - 16/12/2019)** ((((CAPPRM:AS1210 , CAPPRM:CE , CAPPRM:MHLW , CAPPRM:MOM) + MOVOL:400V , CAPPRM:MHLW + MOVOL:200V) + FREQ:50HZ , ((MOVOL:200V , MOVOL:460V) + CAPPRM:MHLW , (MOVOL:380V , MOVOL:460V) + CAPPRM:ASME) + FREQ:60HZ) + CAPPRE:IEC , (MOVOL:230V , MOVOL:460V , MOVOL:575V) + CAPPRE:ULCUL + CAPPRM:ASME + FREQ:60HZ) + COOL:AIR	SD
	1622 3798 72	1	WIRE HARNESS	**(12/12/2018 - 24/02/2019)** **(25/02/2019 - 05/12/2019)** ((((CAPPRM:AS1210 , CAPPRM:CE , CAPPRM:MHLW , CAPPRM:MOM) + MOVOL:400V , CAPPRM:CE + MOVOL:500V , CAPPRM:MHLW + MOVOL:200V) + FREQ:50HZ , ((MOVOL:200V , MOVOL:460V) + CAPPRM:MHLW , (MOVOL:380V , MOVOL:460V) + CAPPRM:ASME) + FREQ:60HZ) + CAPPRE:IEC , (MOVOL:230V , MOVOL:460V , MOVOL:575V) + CAPPRE:ULCUL + CAPPRM:ASME + FREQ:60HZ) + COOL:AIR **(06/12/2019 - 16/12/2019)** ((((CAPPRM:AS1210 , CAPPRM:CE , CAPPRM:MHLW , CAPPRM:MOM) + MOVOL:400V , CAPPRM:MHLW + MOVOL:200V) + FREQ:50HZ , ((MOVOL:200V , MOVOL:460V) + CAPPRM:MHLW , (MOVOL:380V , MOVOL:460V) + CAPPRM:ASME) + FREQ:60HZ) + CAPPRE:IEC , (MOVOL:230V , MOVOL:460V , MOVOL:575V) + CAPPRE:ULCUL + CAPPRM:ASME + FREQ:60HZ) + COOL:AIR	Comm Cable

Legend:

CAPPRE:IEC - Component approval electrical:IEC
CAPPRE:ULCUL - Component approval electrical:UL/cUL
CAPPRM:AS1210 - Component approval mechanical:AS1210
CAPPRM:ASME - Component approval mechanical:ASME
CAPPRM:CE - Component approval mechanical:CE
CAPPRM:MHLW - Component approval mechanical:MHLW
CAPPRM:MOM - Component approval mechanical:MOM
COOL:AIR - Cooling:Air cooled
FREQ:50HZ - Frequency:50 Hz
FREQ:60HZ - Frequency:60 Hz
IDRY:N - Integrated dryer:No
MODEL:GA90VP_16 - Model:GA 90VSD+
MOVOL:200V - Supply voltage:200 V
MOVOL:230V - Supply voltage:230 V
MOVOL:380V - Supply voltage:380 V
MOVOL:400V - Supply voltage:400 V
MOVOL:460V - Supply voltage:460 V
MOVOL:500V - Supply voltage:500 V
MOVOL:575V - Supply voltage:575 V

21.15 - Cubicle components GA 90 VSD+ - (200V-380V-460V/60Hz - IEC, 230V-460V-575V/60Hz - UL-cUL, 200V-400V-500V/50Hz - IEC) - Pack (12/12/2018 - 16/12/2019)

((((CAPPRM:AS1210 , CAPPRM:CE , CAPPRM:MHLW , CAPPRM:MOM) + MOVOL:400V , CAPPRM:CE + COOL:AIR + MOVOL:500V) + FREQ:50HZ , ((MOVOL:380V , MOVOL:460V) + CAPPRM:ASME , CAPPRM:MHLW + MOVOL:460V) + FREQ:60HZ , CAPPRM:MHLW + COOL:AIR + MOVOL:200V) + CAPPRE:IEC , ((MOVOL:230V , MOVOL:575V) + COOL:AIR , MOVOL:460V) + CAPPRE:ULCUL + CAPPRM:ASME + FREQ:60HZ) + IDRY:N + MODEL:GA90VP_16

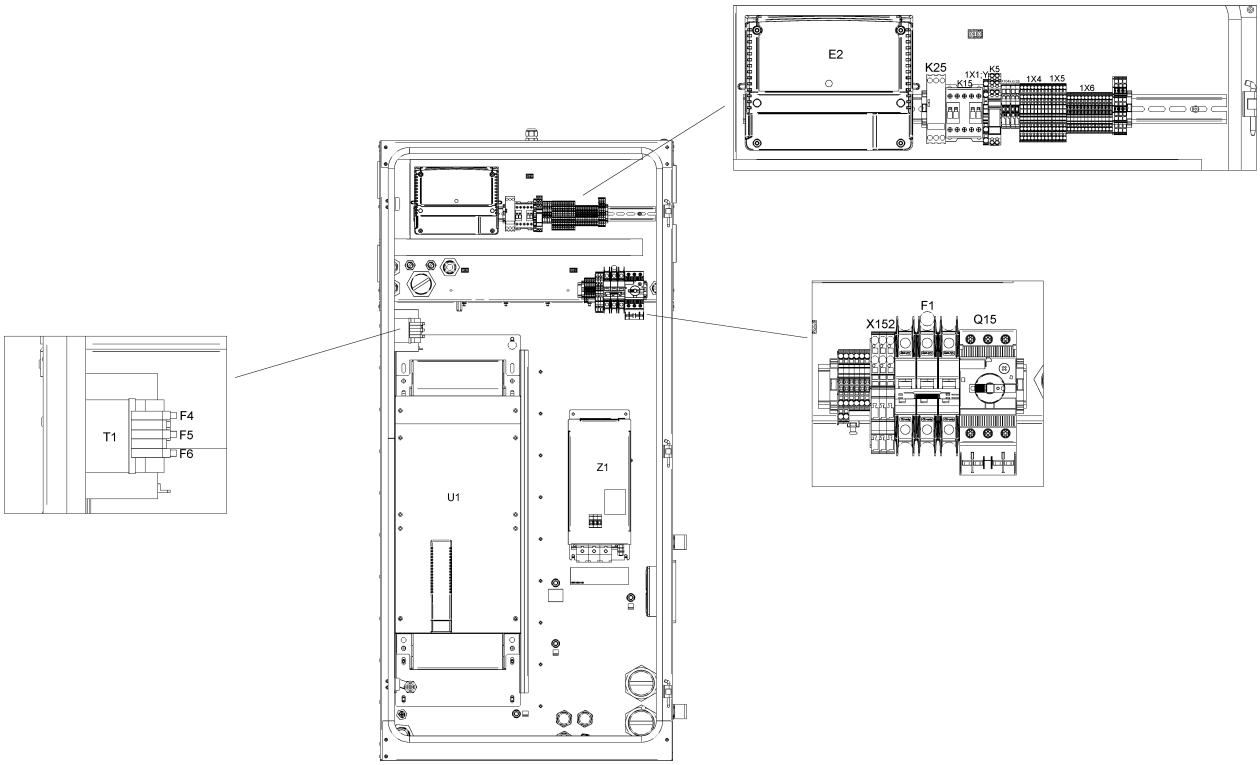

21.15 - Cubicle components GA 90 VSD+ - (200V-380V-460V/60Hz - IEC, 230V-460V-575V/60Hz - UL-cUL, 200V-400V-500V/50Hz - IEC) - Pack (12/12/2018 - 16/12/2019)

((((CAPPRM:AS1210 , CAPPRM:CE , CAPPRM:MHLW , CAPPRM:MOM) + MOVOL:400V , CAPPRM:CE + COOL:AIR + MOVOL:500V) + FREQ:50HZ , ((MOVOL:380V , MOVOL:460V) + CAPPRM:ASME , CAPPRM:MHLW + MOVOL:460V) + FREQ:60HZ , CAPPRM:MHLW + COOL:AIR + MOVOL:200V) + CAPPRE:IEC , ((MOVOL:230V , MOVOL:575V) + COOL:AIR , MOVOL:460V) + CAPPRE:ULCUL + CAPPRM:ASME + FREQ:60HZ) + IDRY:N + MODEL:GA90VP_16

Ref	Part Number	Qty	Name	Validity	EL
	1622 5099 04	1	DI CHANE CABLE (1400MM)	**(12/12/2018 - 24/02/2019)** **(25/02/2019 - 05/12/2019)** ((((CAPPRM:AS1210 , CAPPRM:CE , CAPPRM:MHLW , CAPPRM:MOM) + MOVOL:400V , CAPPRM:CE + MOVOL:500V , CAPPRM:MHLW + MOVOL:200V) + FREQ:50HZ , ((MOVOL:200V , MOVOL:460V) + CAPPRM:MHLW , (MOVOL:380V , MOVOL:460V) + CAPPRM:ASME) + FREQ:60HZ) + CAPPRE:IEC , (MOVOL:230V , MOVOL:460V , MOVOL:575V) + CAPPRE:ULCUL + CAPPRM:ASME + FREQ:60HZ) + COOL:AIR **(06/12/2019 - 16/12/2019)** ((((CAPPRM:AS1210 , CAPPRM:CE , CAPPRM:MHLW , CAPPRM:MOM) + MOVOL:400V , CAPPRM:MHLW + MOVOL:200V) + FREQ:50HZ , ((MOVOL:200V , MOVOL:460V) + CAPPRM:MHLW , (MOVOL:380V , MOVOL:460V) + CAPPRM:ASME) + FREQ:60HZ) + CAPPRE:IEC , (MOVOL:230V , MOVOL:460V , MOVOL:575V) + CAPPRE:ULCUL + CAPPRM:ASME + FREQ:60HZ) + COOL:AIR	
	Electrical legend:	Comm Cable Loose supply			
	1649 8001 22	1	CUBICLE	**(12/12/2018 - 24/02/2019)** **(25/02/2019 - 05/12/2019)** ((((CAPPRM:AS1210 , CAPPRM:CE , CAPPRM:MHLW , CAPPRM:MOM) + MOVOL:400V , CAPPRM:CE + MOVOL:500V , CAPPRM:MHLW + MOVOL:200V) + FREQ:50HZ , ((MOVOL:200V , MOVOL:460V) + CAPPRM:MHLW , (MOVOL:380V , MOVOL:460V) + CAPPRM:ASME) + FREQ:60HZ) + CAPPRE:IEC , (MOVOL:230V , MOVOL:460V , MOVOL:575V) + CAPPRE:ULCUL + CAPPRM:ASME + FREQ:60HZ) + COOL:AIR **(06/12/2019 - 16/12/2019)** ((((CAPPRM:AS1210 , CAPPRM:CE , CAPPRM:MHLW , CAPPRM:MOM) + MOVOL:400V , CAPPRM:MHLW + MOVOL:200V) + FREQ:50HZ , ((MOVOL:200V , MOVOL:460V) + CAPPRM:MHLW , (MOVOL:380V , MOVOL:460V) + CAPPRM:ASME) + FREQ:60HZ) + CAPPRE:IEC , (MOVOL:230V , MOVOL:460V , MOVOL:575V) + CAPPRE:ULCUL + CAPPRM:ASME + FREQ:60HZ) + COOL:AIR	MSA
	1649 8001 32	1	PLATE NEOS "D"	**(12/12/2018 - 24/02/2019)** **(25/02/2019 - 05/12/2019)** ((((CAPPRM:AS1210 , CAPPRM:CE , CAPPRM:MHLW , CAPPRM:MOM) + MOVOL:400V , CAPPRM:CE + MOVOL:500V , CAPPRM:MHLW + MOVOL:200V) + FREQ:50HZ , ((MOVOL:200V , MOVOL:460V) + CAPPRM:MHLW , (MOVOL:380V , MOVOL:460V) + CAPPRM:ASME) + FREQ:60HZ) + CAPPRE:IEC , (MOVOL:230V , MOVOL:460V , MOVOL:575V) + CAPPRE:ULCUL + CAPPRM:ASME + FREQ:60HZ) + COOL:AIR **(06/12/2019 - 16/12/2019)** ((((CAPPRM:AS1210 , CAPPRM:CE , CAPPRM:MHLW , CAPPRM:MOM) + MOVOL:400V , CAPPRM:MHLW + MOVOL:200V) + FREQ:50HZ , ((MOVOL:200V , MOVOL:460V) + CAPPRM:MHLW , (MOVOL:380V , MOVOL:460V) + CAPPRM:ASME) + FREQ:60HZ) + CAPPRE:IEC , (MOVOL:230V , MOVOL:460V , MOVOL:575V) + CAPPRE:ULCUL + CAPPRM:ASME + FREQ:60HZ) + COOL:AIR	
	Electrical legend:	Mounting plate			

Legend:

CAPPRE:IEC - Component approval electrical:IEC
CAPPRE:ULCUL - Component approval electrical:UL/cUL
CAPPRM:AS1210 - Component approval mechanical:AS1210
CAPPRM:ASME - Component approval mechanical:ASME
CAPPRM:CE - Component approval mechanical:CE
CAPPRM:MHLW - Component approval mechanical:MHLW
CAPPRM:MOM - Component approval mechanical:MOM
COOL:AIR - Cooling:Air cooled
FREQ:50HZ - Frequency:50 Hz
FREQ:60HZ - Frequency:60 Hz
IDRY:N - Integrated dryer:No
MODEL:GA90VP_16 - Model:GA 90VSD+
MOVOL:200V - Supply voltage:200 V
MOVOL:230V - Supply voltage:230 V
MOVOL:380V - Supply voltage:380 V
MOVOL:400V - Supply voltage:400 V
MOVOL:460V - Supply voltage:460 V
MOVOL:500V - Supply voltage:500 V
MOVOL:575V - Supply voltage:575 V

21.15 - Cubicle components GA 90 VSD+ - (200V-380V-460V/60Hz - IEC, 230V-460V-575V/60Hz - UL-cUL, 200V-400V-500V/50Hz - IEC) - Pack (12/12/2018 - 16/12/2019)

((((CAPPRM:AS1210 , CAPPRM:CE , CAPPRM:MHLW , CAPPRM:MOM) + MOVOL:400V , CAPPRM:CE + COOL:AIR + MOVOL:500V) + FREQ:50HZ , ((MOVOL:380V , MOVOL:460V) + CAPPRM:ASME , CAPPRM:MHLW + MOVOL:460V) + FREQ:60HZ , CAPPRM:MHLW + COOL:AIR + MOVOL:200V) + CAPPRE:IEC , ((MOVOL:230V , MOVOL:575V) + COOL:AIR , MOVOL:460V) + CAPPRE:ULCUL + CAPPRM:ASME + FREQ:60HZ) + IDRY:N + MODEL:GA90VP_16

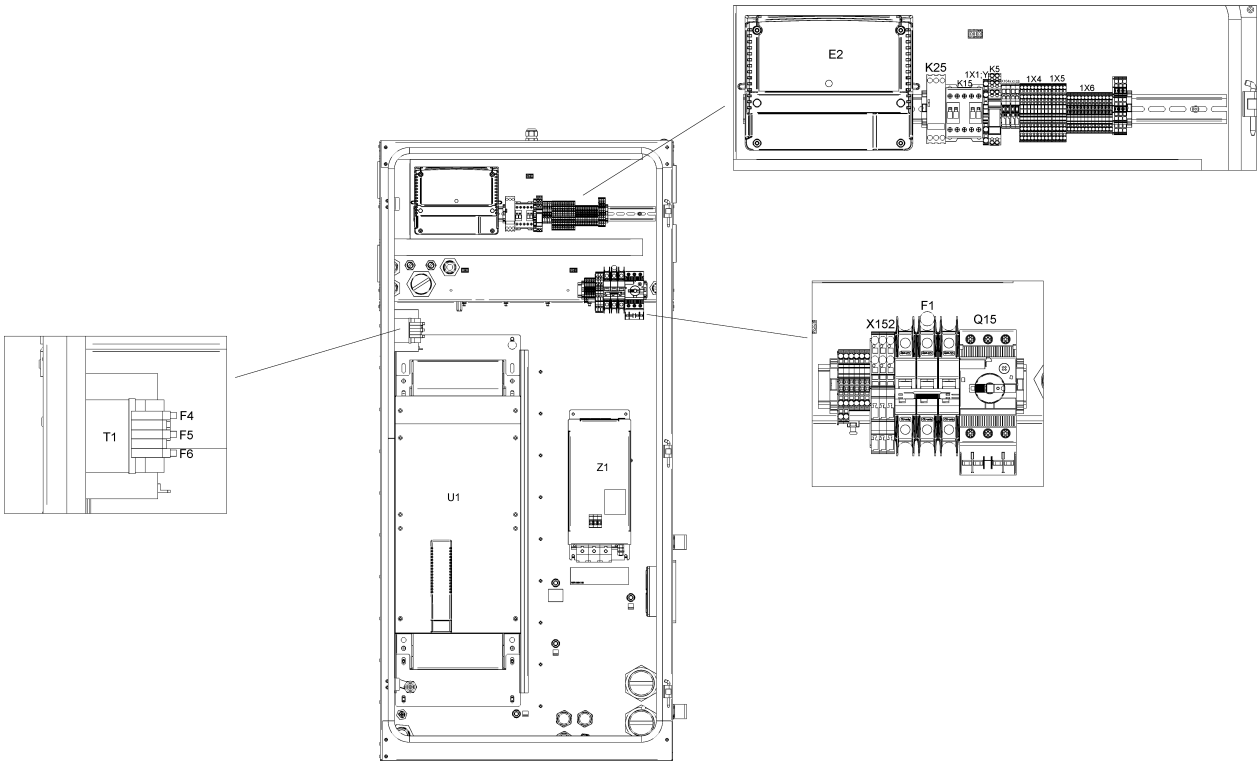

21.15 - Cubicle components GA 90 VSD+ - (200V-380V-460V/60Hz - IEC, 230V-460V-575V/60Hz - UL-cUL, 200V-400V-500V/50Hz - IEC) - Pack (12/12/2018 - 16/12/2019)

((((CAPPRM:AS1210 , CAPPRM:CE , CAPPRM:MHLW , CAPPRM:MOM) + MOVOL:400V , CAPPRM:CE + COOL:AIR + MOVOL:500V) + FREQ:50HZ , ((MOVOL:380V , MOVOL:460V) + CAPPRM:ASME , CAPPRM:MHLW + MOVOL:460V) + FREQ:60HZ , CAPPRM:MHLW + COOL:AIR + MOVOL:200V) + CAPPRE:IEC , ((MOVOL:230V , MOVOL:575V) + COOL:AIR , MOVOL:460V) + CAPPRE:ULCUL + CAPPRM:ASME + FREQ:60HZ) + IDRY:N + MODEL:GA90VP_16

Ref	Part Number	Qty	Name	Validity	EL
	1649 8003 85	1	MOUNTING PLATE	**(12/12/2018 - 24/02/2019)** **(25/02/2019 - 05/12/2019)** ((((CAPPRM:AS1210 , CAPPRM:CE , CAPPRM:MHLW , CAPPRM:MOM) + MOVOL:400V , CAPPRM:CE + MOVOL:500V , CAPPRM:MHLW + MOVOL:200V) + FREQ:50HZ , ((MOVOL:200V , MOVOL:460V) + CAPPRM:MHLW , (MOVOL:380V , MOVOL:460V) + CAPPRM:ASME) + FREQ:60HZ) + CAPPRE:IEC , (MOVOL:230V , MOVOL:460V , MOVOL:575V) + CAPPRE:ULCUL + CAPPRM:ASME + FREQ:60HZ) + COOL:AIR **(06/12/2019 - 16/12/2019)** ((((CAPPRM:AS1210 , CAPPRM:CE , CAPPRM:MHLW , CAPPRM:MOM) + MOVOL:400V , CAPPRM:MHLW + MOVOL:200V) + FREQ:50HZ , ((MOVOL:200V , MOVOL:460V) + CAPPRM:MHLW , (MOVOL:380V , MOVOL:460V) + CAPPRM:ASME) + FREQ:60HZ) + CAPPRE:IEC , (MOVOL:230V , MOVOL:460V , MOVOL:575V) + CAPPRE:ULCUL + CAPPRM:ASME + FREQ:60HZ) + COOL:AIR	
	Electrical legend:	Mounting plate			
	1649 8002 39	1	WIRE HARNESS	**(12/12/2018 - 24/02/2019)** **(25/02/2019 - 05/12/2019)** ((((CAPPRM:AS1210 , CAPPRM:CE , CAPPRM:MHLW , CAPPRM:MOM) + MOVOL:400V , CAPPRM:CE + MOVOL:500V , CAPPRM:MHLW + MOVOL:200V) + FREQ:50HZ , ((MOVOL:200V , MOVOL:460V) + CAPPRM:MHLW , (MOVOL:380V , MOVOL:460V) + CAPPRM:ASME) + FREQ:60HZ) + CAPPRE:IEC , (MOVOL:230V , MOVOL:460V , MOVOL:575V) + CAPPRE:ULCUL + CAPPRM:ASME + FREQ:60HZ) + COOL:AIR **(06/12/2019 - 16/12/2019)** ((((CAPPRM:AS1210 , CAPPRM:CE , CAPPRM:MHLW , CAPPRM:MOM) + MOVOL:400V , CAPPRM:MHLW + MOVOL:200V) + FREQ:50HZ , ((MOVOL:200V , MOVOL:460V) + CAPPRM:MHLW , (MOVOL:380V , MOVOL:460V) + CAPPRM:ASME) + FREQ:60HZ) + CAPPRE:IEC , (MOVOL:230V , MOVOL:460V , MOVOL:575V) + CAPPRE:ULCUL + CAPPRM:ASME + FREQ:60HZ) + COOL:AIR	WH
•	1088 1508 01	2	CONNECTOR		
•	1088 1508 52	2	CONNECTOR		
•	1088 1508 21	6	CONNECTOR		
•	1088 1508 51	6	CONNECTOR		
•	1088 1508 54	2	COVER FOR CONNECTOR (PRES.SENS		
•	1088 0011 31	1	CONNECTOR		
•	1088 0153 17	1	CONNECT.HEAD		
•	0698 5140 74	1	CABLE GLAND		
•	0698 5149 10	1	CABLE SEAL		
•	0698 5148 11	1	PLUG		
•	0697 9809 23	1	LOCK NUT M32X1,5		
•	0694 5285 13	1	CABLE LUG 0.5-1.5MM²		
•	1088 0031 73	1	CONNECTOR		

Legend:

CAPPRE:IEC - Component approval electrical:IEC
CAPPRM:ASME - Component approval mechanical:ASME
CAPPRM:MOM - Component approval mechanical:MOM
FREQ:60HZ - Frequency:60 Hz
MOVOL:200V - Supply voltage:200 V
MOVOL:400V - Supply voltage:400 V
MOVOL:575V - Supply voltage:575 V
CAPPRE:ULCUL - Component approval electrical:UL/cUL
CAPPRM:CE - Component approval mechanical:CE
COOL:AIR - Cooling:Air cooled
IDRY:N - Integrated dryer:No
MOVOL:230V - Supply voltage:230 V
MOVOL:460V - Supply voltage:460 V
CAPPRM:AS1210 - Component approval mechanical:AS1210
CAPPRM:MHLW - Component approval mechanical:MHLW
FREQ:50HZ - Frequency:50 Hz
MODEL:GA90VP_16 - Model:GA 90VSD+
MOVOL:380V - Supply voltage:380 V
MOVOL:500V - Supply voltage:500 V

21.15 - Cubicle components GA 90 VSD+ - (200V-380V-460V/60Hz - IEC, 230V-460V-575V/60Hz - UL-cUL, 200V-400V-500V/50Hz - IEC) - Pack (12/12/2018 - 16/12/2019)

((((CAPPRM:AS1210 , CAPPRM:CE , CAPPRM:MHLW , CAPPRM:MOM) + MOVOL:400V , CAPPRM:CE + COOL:AIR + MOVOL:500V) + FREQ:50HZ , ((MOVOL:380V , MOVOL:460V) + CAPPRM:ASME , CAPPRM:MHLW + MOVOL:460V) + FREQ:60HZ , CAPPRM:MHLW + COOL:AIR + MOVOL:200V) + CAPPRE:IEC , ((MOVOL:230V , MOVOL:575V) + COOL:AIR , MOVOL:460V) + CAPPRE:ULCUL + CAPPRM:ASME + FREQ:60HZ) + IDRY:N + MODEL:GA90VP_16

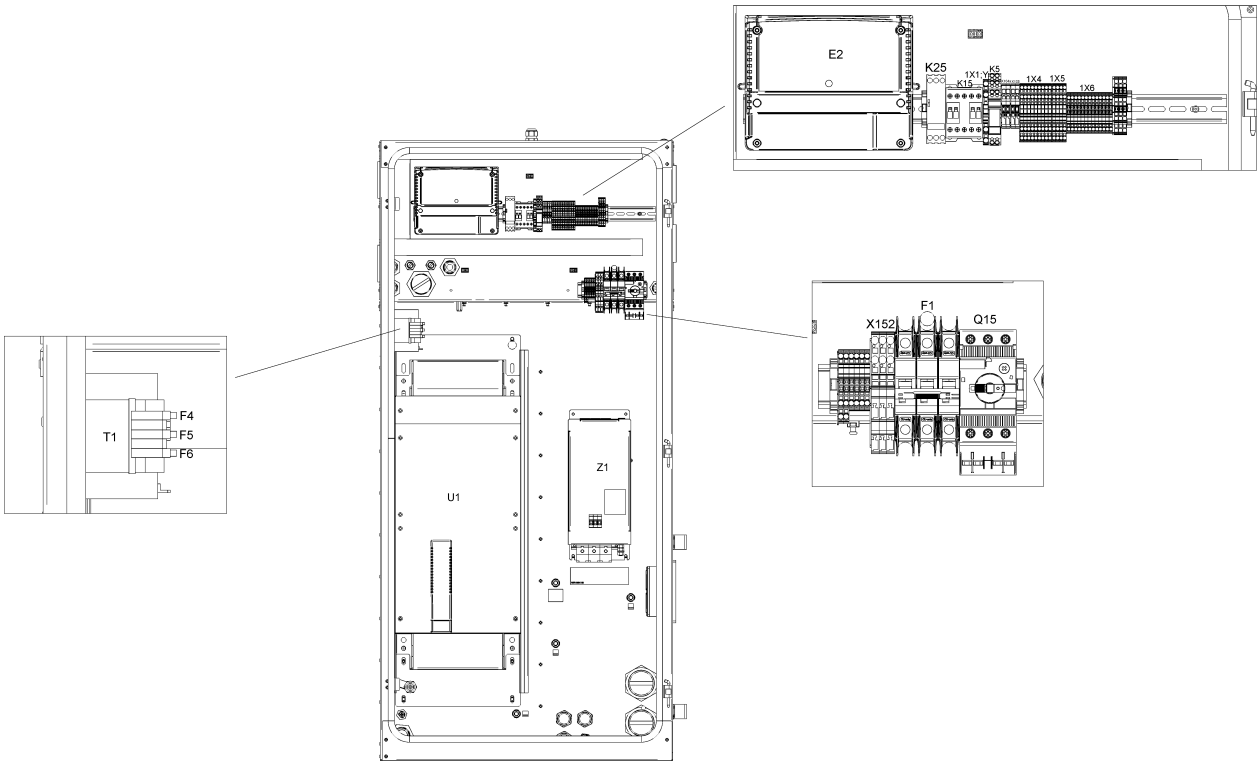

Ref	Part Number	Qty	Name	Validity	EL
	1649 8002 40	1	WIRE HARNESS	**(12/12/2018 - 24/02/2019)** **(25/02/2019 - 05/12/2019)** ((((CAPPRM:AS1210 , CAPPRM:CE , CAPPRM:MHLW , CAPPRM:MOM) + MOVOL:400V , CAPPRM:CE + MOVOL:500V , CAPPRM:MHLW + MOVOL:200V) + FREQ:50HZ , ((MOVOL:200V , MOVOL:460V) + CAPPRM:MHLW , (MOVOL:380V , MOVOL:460V) + CAPPRM:ASME) + FREQ:60HZ) + CAPPRE:IEC , (MOVOL:230V , MOVOL:460V , MOVOL:575V) + CAPPRE:ULCUL + CAPPRM:ASME + FREQ:60HZ) + COOL:AIR **(06/12/2019 - 16/12/2019)** ((((CAPPRM:AS1210 , CAPPRM:CE , CAPPRM:MHLW , CAPPRM:MOM) + MOVOL:400V , CAPPRM:MHLW + MOVOL:200V) + FREQ:50HZ , ((MOVOL:200V , MOVOL:460V) + CAPPRM:MHLW , (MOVOL:380V , MOVOL:460V) + CAPPRM:ASME) + FREQ:60HZ) + CAPPRE:IEC , (MOVOL:230V , MOVOL:460V , MOVOL:575V) + CAPPRE:ULCUL + CAPPRM:ASME + FREQ:60HZ) + COOL:AIR	WH
•	1088 0011 30	2	CONNECTOR		
•	1088 0011 31	1	CONNECTOR		
•	1088 0150 50	1	CONNECTION HEAD FOR SOL. VALVE		
•	1088 0150 53	1	CONNECT.HEAD		
•	0698 5140 74	1	CABLE GLAND		
•	0698 5149 10	1	CABLE SEAL		
•	0698 5148 11	1	PLUG		
•	0697 9809 23	1	LOCK NUT M32X1,5		
•	1089 0574 87	1	TEMPERATURE SENSOR PT1000		
•	0694 5285 13	3	CABLE LUG 0.5-1.5MM²		
	1649 8002 73	1	WIRE HARNESS	**(12/12/2018 - 24/02/2019)** **(25/02/2019 - 05/12/2019)** ((((CAPPRM:AS1210 , CAPPRM:CE , CAPPRM:MHLW , CAPPRM:MOM) + MOVOL:400V , CAPPRM:CE + MOVOL:500V , CAPPRM:MHLW + MOVOL:200V) + FREQ:50HZ , ((MOVOL:200V , MOVOL:460V) + CAPPRM:MHLW , (MOVOL:380V , MOVOL:460V) + CAPPRM:ASME) + FREQ:60HZ) + CAPPRE:IEC , (MOVOL:230V , MOVOL:460V , MOVOL:575V) + CAPPRE:ULCUL + CAPPRM:ASME + FREQ:60HZ) + COOL:AIR **(06/12/2019 - 16/12/2019)** ((((CAPPRM:AS1210 , CAPPRM:CE , CAPPRM:MHLW , CAPPRM:MOM) + MOVOL:400V , CAPPRM:MHLW + MOVOL:200V) + FREQ:50HZ , ((MOVOL:200V , MOVOL:460V) + CAPPRM:MHLW , (MOVOL:380V , MOVOL:460V) + CAPPRM:ASME) + FREQ:60HZ) + CAPPRE:IEC , (MOVOL:230V , MOVOL:460V , MOVOL:575V) + CAPPRE:ULCUL + CAPPRM:ASME + FREQ:60HZ) + COOL:AIR	
	Electrical legend:	Pack Drain + Air filter switch			
•	1088 0011 09	1	CONNECTOR		
•	1088 0017 24	1	CONNECTOR		
•	0698 5140 74	1	CABLE GLAND		
•	0698 5149 15	1	MULTIPAL SEALING		
•	0697 9809 23	1	LOCK NUT M32X1,5		

Legend:

CAPPRE:IEC - Component approval electrical:IEC
CAPPRM:ASME - Component approval mechanical:ASME
CAPPRM:MOM - Component approval mechanical:MOM
FREQ:60HZ - Frequency:60 Hz
MOVOL:200V - Supply voltage:200 V
MOVOL:400V - Supply voltage:400 V
MOVOL:575V - Supply voltage:575 V
CAPPRE:ULCUL - Component approval electrical:UL/cUL
CAPPRM:CE - Component approval mechanical:CE
COOL:AIR - Cooling:Air cooled
IDRY:N - Integrated dryer:No
MOVOL:230V - Supply voltage:230 V
MOVOL:460V - Supply voltage:460 V
CAPPRM:AS1210 - Component approval mechanical:AS1210
CAPPRM:MHLW - Component approval mechanical:MHLW
FREQ:50HZ - Frequency:50 Hz
MODEL:GA90VP_16 - Model:GA 90VSD+
MOVOL:380V - Supply voltage:380 V
MOVOL:500V - Supply voltage:500 V

21.15 - Cubicle components GA 90 VSD+ - (200V-380V-460V/60Hz - IEC, 230V-460V-575V/60Hz - UL-cUL, 200V-400V-500V/50Hz - IEC) - Pack (12/12/2018 - 16/12/2019)

((((CAPPRM:AS1210 , CAPPRM:CE , CAPPRM:MHLW , CAPPRM:MOM) + MOVOL:400V , CAPPRM:CE + COOL:AIR + MOVOL:500V) + FREQ:50HZ , ((MOVOL:380V , MOVOL:460V) + CAPPRM:ASME , CAPPRM:MHLW + MOVOL:460V) + FREQ:60HZ , CAPPRM:MHLW + COOL:AIR + MOVOL:200V) + CAPPRE:IEC , ((MOVOL:230V , MOVOL:575V) + COOL:AIR , MOVOL:460V) + CAPPRE:ULCUL + CAPPRM:ASME + FREQ:60HZ) + IDRY:N + MODEL:GA90VP_16

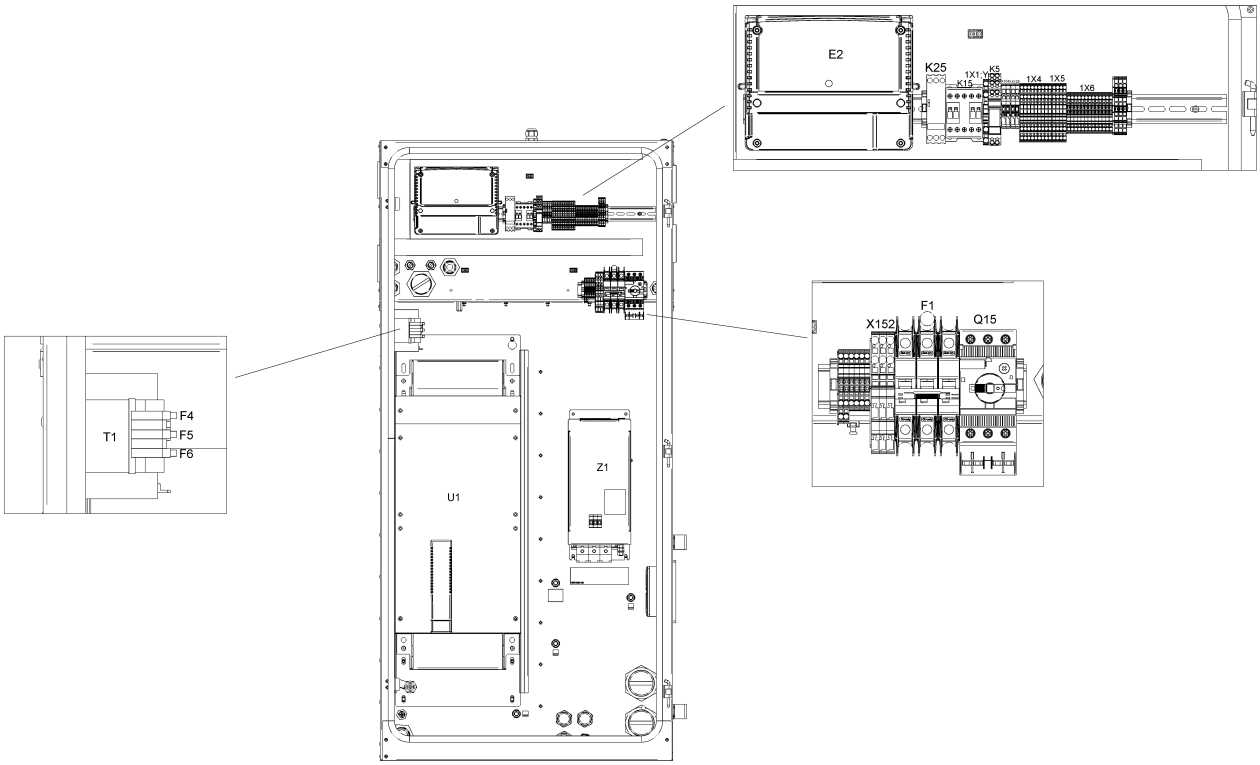

21.15 - Cubicle components GA 90 VSD+ - (200V-380V-460V/60Hz - IEC, 230V-460V-575V/60Hz - UL-cUL, 200V-400V-500V/50Hz - IEC) - Pack (12/12/2018 - 16/12/2019)

((((CAPPRM:AS1210 , CAPPRM:CE , CAPPRM:MHLW , CAPPRM:MOM) + MOVOL:400V , CAPPRM:CE + COOL:AIR + MOVOL:500V) + FREQ:50HZ , ((MOVOL:380V , MOVOL:460V) + CAPPRM:ASME , CAPPRM:MHLW + MOVOL:460V) + FREQ:60HZ , CAPPRM:MHLW + COOL:AIR + MOVOL:200V) + CAPPRE:IEC , ((MOVOL:230V , MOVOL:575V) + COOL:AIR , MOVOL:460V) + CAPPRE:ULCUL + CAPPRM:ASME + FREQ:60HZ) + IDRY:N + MODEL:GA90VP_16

Ref	Part Number	Qty	Name	Validity	EL
	1649 8002 75	1	WIRE HARNESS	**(12/12/2018 - 24/02/2019)** **(25/02/2019 - 05/12/2019)** ((((CAPPRM:AS1210 , CAPPRM:CE , CAPPRM:MHLW , CAPPRM:MOM) + MOVOL:400V , CAPPRM:CE + MOVOL:500V , CAPPRM:MHLW + MOVOL:200V) + FREQ:50HZ , ((MOVOL:200V , MOVOL:460V) + CAPPRM:MHLW , (MOVOL:380V , MOVOL:460V) + CAPPRM:ASME) + FREQ:60HZ) + CAPPRE:IEC , (MOVOL:230V , MOVOL:460V , MOVOL:575V) + CAPPRE:ULCUL + CAPPRM:ASME + FREQ:60HZ) + COOL:AIR **(06/12/2019 - 16/12/2019)** ((((CAPPRM:AS1210 , CAPPRM:CE , CAPPRM:MHLW , CAPPRM:MOM) + MOVOL:400V , CAPPRM:MHLW + MOVOL:200V) + FREQ:50HZ , ((MOVOL:200V , MOVOL:460V) + CAPPRM:MHLW , (MOVOL:380V , MOVOL:460V) + CAPPRM:ASME) + FREQ:60HZ) + CAPPRE:IEC , (MOVOL:230V , MOVOL:460V , MOVOL:575V) + CAPPRE:ULCUL + CAPPRM:ASME + FREQ:60HZ) + COOL:AIR	
	Electrical legend:	Relative Humidity sensor			
•	~~1089 9320 09~~	1	RH SENSOR	**(12/12/2018 - 24/02/2019)** **(25/02/2019 - 21/07/2019)** ((((CAPPRM:AS1210 , CAPPRM:CE , CAPPRM:MHLW , CAPPRM:MOM) + MOVOL:400V , CAPPRM:CE + MOVOL:500V , CAPPRM:MHLW + MOVOL:200V) + FREQ:50HZ , ((MOVOL:200V , MOVOL:460V) + CAPPRM:MHLW , (MOVOL:380V , MOVOL:460V) + CAPPRM:ASME) + FREQ:60HZ) + CAPPRE:IEC , (MOVOL:230V , MOVOL:460V , MOVOL:575V) + CAPPRE:ULCUL + CAPPRM:ASME + FREQ:60HZ) + COOL:AIR	
	Substituted by:	1089 9320 10 - TEMP. SENSOR (quantity: 1)			
•	1089 9320 10	1	TEMPERATURE SENSOR	**(22/07/2019 - 05/12/2019)** ((((CAPPRM:AS1210 , CAPPRM:CE , CAPPRM:MHLW , CAPPRM:MOM) + MOVOL:400V , CAPPRM:CE + MOVOL:500V , CAPPRM:MHLW + MOVOL:200V) + FREQ:50HZ , ((MOVOL:200V , MOVOL:460V) + CAPPRM:MHLW , (MOVOL:380V , MOVOL:460V) + CAPPRM:ASME) + FREQ:60HZ) + CAPPRE:IEC , (MOVOL:230V , MOVOL:460V , MOVOL:575V) + CAPPRE:ULCUL + CAPPRM:ASME + FREQ:60HZ) + COOL:AIR **(06/12/2019 - 16/12/2019)** ((((CAPPRM:AS1210 , CAPPRM:CE , CAPPRM:MHLW , CAPPRM:MOM) + MOVOL:400V , CAPPRM:MHLW + MOVOL:200V) + FREQ:50HZ , ((MOVOL:200V , MOVOL:460V) + CAPPRM:MHLW , (MOVOL:380V , MOVOL:460V) + CAPPRM:ASME) + FREQ:60HZ) + CAPPRE:IEC , (MOVOL:230V , MOVOL:460V , MOVOL:575V) + CAPPRE:ULCUL + CAPPRM:ASME + FREQ:60HZ) + COOL:AIR	
•	0698 5140 75	1	CABLE GLAND		

Legend:

CAPPRE:IEC - Component approval electrical:IEC
CAPPRE:ULCUL - Component approval electrical:UL/cUL
CAPPRM:AS1210 - Component approval mechanical:AS1210
CAPPRM:ASME - Component approval mechanical:ASME
CAPPRM:CE - Component approval mechanical:CE
CAPPRM:MHLW - Component approval mechanical:MHLW
CAPPRM:MOM - Component approval mechanical:MOM
COOL:AIR - Cooling:Air cooled
FREQ:50HZ - Frequency:50 Hz
FREQ:60HZ - Frequency:60 Hz
IDRY:N - Integrated dryer:No
MODEL:GA90VP_16 - Model:GA 90VSD+
MOVOL:200V - Supply voltage:200 V
MOVOL:230V - Supply voltage:230 V
MOVOL:380V - Supply voltage:380 V
MOVOL:400V - Supply voltage:400 V
MOVOL:460V - Supply voltage:460 V
MOVOL:500V - Supply voltage:500 V
MOVOL:575V - Supply voltage:575 V

21.15 - Cubicle components GA 90 VSD+ - (200V-380V-460V/60Hz - IEC, 230V-460V-575V/60Hz - UL-cUL, 200V-400V-500V/50Hz - IEC) - Pack (12/12/2018 - 16/12/2019)

((((CAPPRM:AS1210 , CAPPRM:CE , CAPPRM:MHLW , CAPPRM:MOM) + MOVOL:400V , CAPPRM:CE + COOL:AIR + MOVOL:500V) + FREQ:50HZ , ((MOVOL:380V , MOVOL:460V) + CAPPRM:ASME , CAPPRM:MHLW + MOVOL:460V) + FREQ:60HZ , CAPPRM:MHLW + COOL:AIR + MOVOL:200V) + CAPPRE:IEC , ((MOVOL:230V , MOVOL:575V) + COOL:AIR , MOVOL:460V) + CAPPRE:ULCUL + CAPPRM:ASME + FREQ:60HZ) + IDRY:N + MODEL:GA90VP_16

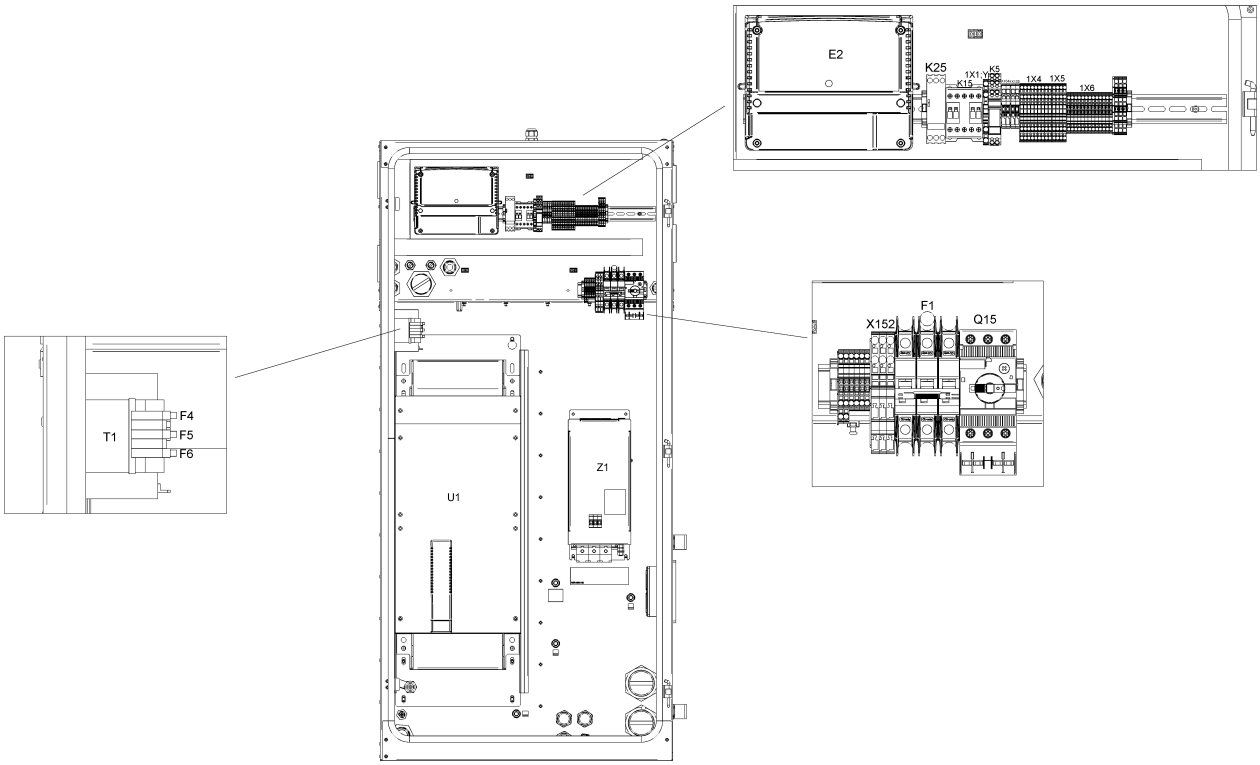

21.15 - Cubicle components GA 90 VSD+ - (200V-380V-460V/60Hz - IEC, 230V-460V-575V/60Hz - UL-cUL, 200V-400V-500V/50Hz - IEC) - Pack (12/12/2018 - 16/12/2019)

((((CAPPRM:AS1210 , CAPPRM:CE , CAPPRM:MHLW , CAPPRM:MOM) + MOVOL:400V , CAPPRM:CE + COOL:AIR + MOVOL:500V) + FREQ:50HZ , ((MOVOL:380V , MOVOL:460V) + CAPPRM:ASME , CAPPRM:MHLW + MOVOL:460V) + FREQ:60HZ , CAPPRM:MHLW + COOL:AIR + MOVOL:200V) + CAPPRE:IEC , ((MOVOL:230V , MOVOL:575V) + COOL:AIR , MOVOL:460V) + CAPPRE:ULCUL + CAPPRM:ASME + FREQ:60HZ) + IDRY:N + MODEL:GA90VP_16

Ref	Part Number	Qty	Name	Validity	EL
	1649 8001 44	3	MOTOR CABLE	**(12/12/2018 - 24/02/2019)** **(25/02/2019 - 05/12/2019)** ((((CAPPRM:AS1210 , CAPPRM:CE , CAPPRM:MHLW , CAPPRM:MOM) + MOVOL:400V , CAPPRM:CE + MOVOL:500V , CAPPRM:MHLW + MOVOL:200V) + FREQ:50HZ , ((MOVOL:200V , MOVOL:460V) + CAPPRM:MHLW , (MOVOL:380V , MOVOL:460V) + CAPPRM:ASME) + FREQ:60HZ) + CAPPRE:IEC , (MOVOL:230V , MOVOL:460V , MOVOL:575V) + CAPPRE:ULCUL + CAPPRM:ASME + FREQ:60HZ) + COOL:AIR **(06/12/2019 - 16/12/2019)** ((((CAPPRM:AS1210 , CAPPRM:CE , CAPPRM:MHLW , CAPPRM:MOM) + MOVOL:400V , CAPPRM:MHLW + MOVOL:200V) + FREQ:50HZ , ((MOVOL:200V , MOVOL:460V) + CAPPRM:MHLW , (MOVOL:380V , MOVOL:460V) + CAPPRM:ASME) + FREQ:60HZ) + CAPPRE:IEC , (MOVOL:230V , MOVOL:460V , MOVOL:575V) + CAPPRE:ULCUL + CAPPRM:ASME + FREQ:60HZ) + COOL:AIR	
	Electrical legend:	Motor conduit			
•	0698 5142 98	2	CABLE GLAND		
•	0989 3700 25	1	LOCK NUT M32		
•	0694 5283 15	1	CABLE LUG		
•	0694 5600 68	1	CABLE LUG		
	1649 8001 47	1	MOTOR CABLE	**(12/12/2018 - 24/02/2019)** **(25/02/2019 - 05/12/2019)** ((((CAPPRM:AS1210 , CAPPRM:CE , CAPPRM:MHLW , CAPPRM:MOM) + MOVOL:400V , CAPPRM:CE + MOVOL:500V , CAPPRM:MHLW + MOVOL:200V) + FREQ:50HZ , ((MOVOL:200V , MOVOL:460V) + CAPPRM:MHLW , (MOVOL:380V , MOVOL:460V) + CAPPRM:ASME) + FREQ:60HZ) + CAPPRE:IEC , (MOVOL:230V , MOVOL:460V , MOVOL:575V) + CAPPRE:ULCUL + CAPPRM:ASME + FREQ:60HZ) + COOL:AIR **(06/12/2019 - 16/12/2019)** ((((CAPPRM:AS1210 , CAPPRM:CE , CAPPRM:MHLW , CAPPRM:MOM) + MOVOL:400V , CAPPRM:MHLW + MOVOL:200V) + FREQ:50HZ , ((MOVOL:200V , MOVOL:460V) + CAPPRM:MHLW , (MOVOL:380V , MOVOL:460V) + CAPPRM:ASME) + FREQ:60HZ) + CAPPRE:IEC , (MOVOL:230V , MOVOL:460V , MOVOL:575V) + CAPPRE:ULCUL + CAPPRM:ASME + FREQ:60HZ) + COOL:AIR	
	Electrical legend:	Motor conduit			
•	0698 5140 73	2	CABLE GLAND M25X1.5 PVC		
•	0697 9809 22	1	LOCK NUT M25		
•	0694 5283 20	1	CABLE LUG		
•	0694 5600 65	1	CABLE LUG M10		

Legend:

CAPPRE:IEC - Component approval electrical:IEC
CAPPRM:ASME - Component approval mechanical:ASME
CAPPRM:MOM - Component approval mechanical:MOM
FREQ:60HZ - Frequency:60 Hz
MOVOL:200V - Supply voltage:200 V
MOVOL:400V - Supply voltage:400 V
MOVOL:575V - Supply voltage:575 V
CAPPRE:ULCUL - Component approval electrical:UL/cUL
CAPPRM:CE - Component approval mechanical:CE
COOL:AIR - Cooling:Air cooled
IDRY:N - Integrated dryer:No
MOVOL:230V - Supply voltage:230 V
MOVOL:460V - Supply voltage:460 V
CAPPRM:AS1210 - Component approval mechanical:AS1210
CAPPRM:MHLW - Component approval mechanical:MHLW
FREQ:50HZ - Frequency:50 Hz
MODEL:GA90VP_16 - Model:GA 90VSD+
MOVOL:380V - Supply voltage:380 V
MOVOL:500V - Supply voltage:500 V

21.15 - Cubicle components GA 90 VSD+ - (200V-380V-460V/60Hz - IEC, 230V-460V-575V/60Hz - UL-cUL, 200V-400V-500V/50Hz - IEC) - Pack (12/12/2018 - 16/12/2019)

((((CAPPRM:AS1210 , CAPPRM:CE , CAPPRM:MHLW , CAPPRM:MOM) + MOVOL:400V , CAPPRM:CE + COOL:AIR + MOVOL:500V) + FREQ:50HZ , ((MOVOL:380V , MOVOL:460V) + CAPPRM:ASME , CAPPRM:MHLW + MOVOL:460V) + FREQ:60HZ , CAPPRM:MHLW + COOL:AIR + MOVOL:200V) + CAPPRE:IEC , ((MOVOL:230V , MOVOL:575V) + COOL:AIR , MOVOL:460V) + CAPPRE:ULCUL + CAPPRM:ASME + FREQ:60HZ) + IDRY:N + MODEL:GA90VP_16

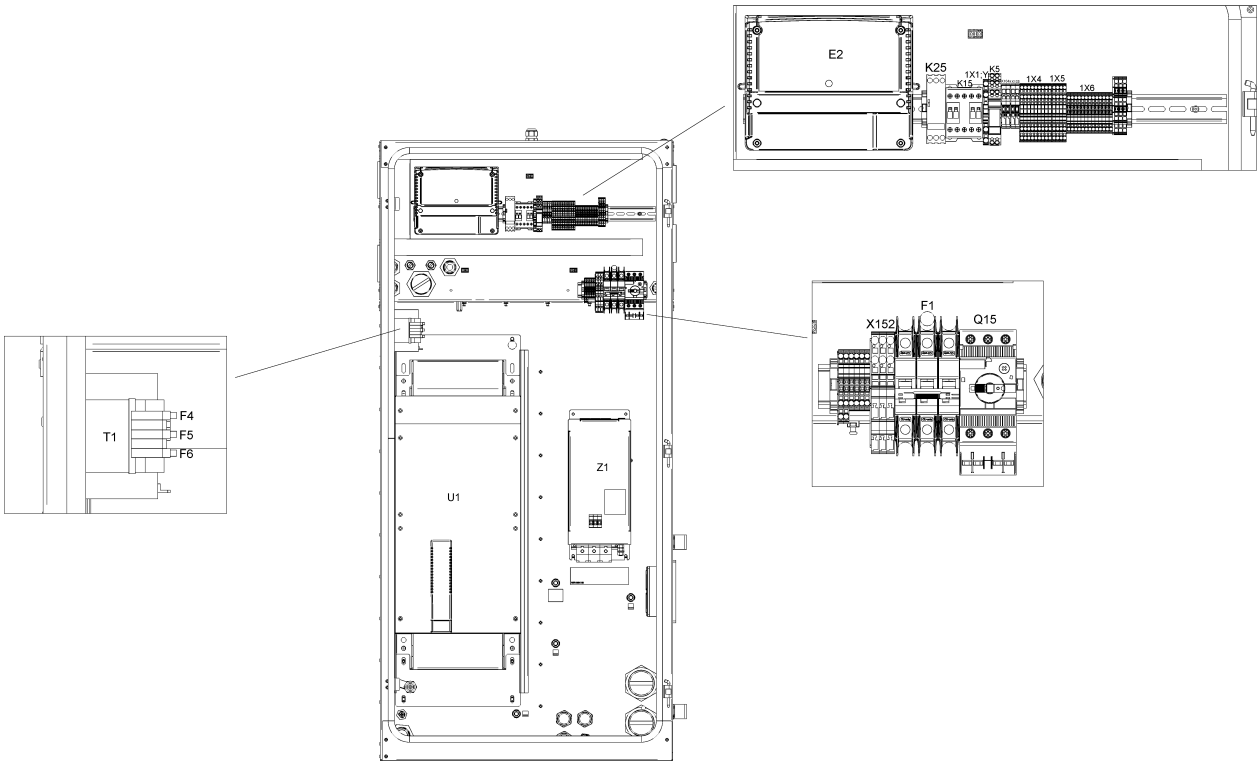

21.15 - Cubicle components GA 90 VSD+ - (200V-380V-460V/60Hz - IEC, 230V-460V-575V/60Hz - UL-cUL, 200V-400V-500V/50Hz - IEC) - Pack (12/12/2018 - 16/12/2019)

((((CAPPRM:AS1210 , CAPPRM:CE , CAPPRM:MHLW , CAPPRM:MOM) + MOVOL:400V , CAPPRM:CE + COOL:AIR + MOVOL:500V) + FREQ:50HZ , ((MOVOL:380V , MOVOL:460V) + CAPPRM:ASME , CAPPRM:MHLW + MOVOL:460V) + FREQ:60HZ , CAPPRM:MHLW + COOL:AIR + MOVOL:200V) + CAPPRE:IEC , ((MOVOL:230V , MOVOL:575V) + COOL:AIR , MOVOL:460V) + CAPPRE:ULCUL + CAPPRM:ASME + FREQ:60HZ) + IDRY:N + MODEL:GA90VP_16

Ref	Part Number	Qty	Name	Validity	EL
		1	DATA LABEL	**(12/12/2018 - 24/02/2019)** **(25/02/2019 - 05/12/2019)** ((((CAPPRM:AS1210 , CAPPRM:CE , CAPPRM:MHLW , CAPPRM:MOM) + MOVOL:400V , CAPPRM:CE + MOVOL:500V , CAPPRM:MHLW + MOVOL:200V) + FREQ:50HZ , ((MOVOL:200V , MOVOL:460V) + CAPPRM:MHLW , (MOVOL:380V , MOVOL:460V) + CAPPRM:ASME) + FREQ:60HZ) + CAPPRE:IEC , (MOVOL:230V , MOVOL:460V , MOVOL:575V) + CAPPRE:ULCUL + CAPPRM:ASME + FREQ:60HZ) + COOL:AIR **(06/12/2019 - 16/12/2019)** ((((CAPPRM:AS1210 , CAPPRM:CE , CAPPRM:MHLW , CAPPRM:MOM) + MOVOL:400V , CAPPRM:MHLW + MOVOL:200V) + FREQ:50HZ , ((MOVOL:200V , MOVOL:460V) + CAPPRM:MHLW , (MOVOL:380V , MOVOL:460V) + CAPPRM:ASME) + FREQ:60HZ) + CAPPRE:IEC , (MOVOL:230V , MOVOL:460V , MOVOL:575V) + CAPPRE:ULCUL + CAPPRM:ASME + FREQ:60HZ) + COOL:AIR	Label
	1079 9901 68	1	WARNING LABEL	**(12/12/2018 - 24/02/2019)** **(25/02/2019 - 05/12/2019)** ((((CAPPRM:AS1210 , CAPPRM:CE , CAPPRM:MHLW , CAPPRM:MOM) + MOVOL:400V , CAPPRM:CE + MOVOL:500V , CAPPRM:MHLW + MOVOL:200V) + FREQ:50HZ , ((MOVOL:200V , MOVOL:460V) + CAPPRM:MHLW , (MOVOL:380V , MOVOL:460V) + CAPPRM:ASME) + FREQ:60HZ) + CAPPRE:IEC , (MOVOL:230V , MOVOL:460V , MOVOL:575V) + CAPPRE:ULCUL + CAPPRM:ASME + FREQ:60HZ) + COOL:AIR **(06/12/2019 - 16/12/2019)** ((((CAPPRM:AS1210 , CAPPRM:CE , CAPPRM:MHLW , CAPPRM:MOM) + MOVOL:400V , CAPPRM:MHLW + MOVOL:200V) + FREQ:50HZ , ((MOVOL:200V , MOVOL:460V) + CAPPRM:MHLW , (MOVOL:380V , MOVOL:460V) + CAPPRM:ASME) + FREQ:60HZ) + CAPPRE:IEC , (MOVOL:230V , MOVOL:460V , MOVOL:575V) + CAPPRE:ULCUL + CAPPRM:ASME + FREQ:60HZ) + COOL:AIR	Label
	1900 5350 14	1	INVERTER	**(12/12/2018 - 24/02/2019)** **(25/02/2019 - 05/12/2019)** ((((CAPPRM:AS1210 , CAPPRM:CE , CAPPRM:MHLW , CAPPRM:MOM) + MOVOL:400V , CAPPRM:CE + MOVOL:500V , CAPPRM:MHLW + MOVOL:200V) + FREQ:50HZ , ((MOVOL:200V , MOVOL:460V) + CAPPRM:MHLW , (MOVOL:380V , MOVOL:460V) + CAPPRM:ASME) + FREQ:60HZ) + CAPPRE:IEC , (MOVOL:230V , MOVOL:460V , MOVOL:575V) + CAPPRE:ULCUL + CAPPRM:ASME + FREQ:60HZ) + COOL:AIR **(06/12/2019 - 16/12/2019)** ((((CAPPRM:AS1210 , CAPPRM:CE , CAPPRM:MHLW , CAPPRM:MOM) + MOVOL:400V , CAPPRM:MHLW + MOVOL:200V) + FREQ:50HZ , ((MOVOL:200V , MOVOL:460V) + CAPPRM:MHLW , (MOVOL:380V , MOVOL:460V) + CAPPRM:ASME) + FREQ:60HZ) + CAPPRE:IEC , (MOVOL:230V , MOVOL:460V , MOVOL:575V) + CAPPRE:ULCUL + CAPPRM:ASME + FREQ:60HZ) + COOL:AIR	U1

Legend:

CAPPRE:IEC - Component approval electrical:IEC
CAPPRE:ULCUL - Component approval electrical:UL/cUL
CAPPRM:AS1210 - Component approval mechanical:AS1210
CAPPRM:ASME - Component approval mechanical:ASME
CAPPRM:CE - Component approval mechanical:CE
CAPPRM:MHLW - Component approval mechanical:MHLW
CAPPRM:MOM - Component approval mechanical:MOM
COOL:AIR - Cooling:Air cooled
FREQ:50HZ - Frequency:50 Hz
FREQ:60HZ - Frequency:60 Hz
IDRY:N - Integrated dryer:No
MODEL:GA90VP_16 - Model:GA 90VSD+
MOVOL:200V - Supply voltage:200 V
MOVOL:230V - Supply voltage:230 V
MOVOL:380V - Supply voltage:380 V
MOVOL:400V - Supply voltage:400 V
MOVOL:460V - Supply voltage:460 V
MOVOL:500V - Supply voltage:500 V
MOVOL:575V - Supply voltage:575 V

21.15 - Cubicle components GA 90 VSD+ - (200V-380V-460V/60Hz - IEC, 230V-460V-575V/60Hz - UL-cUL, 200V-400V-500V/50Hz - IEC) - Pack (12/12/2018 - 16/12/2019)

((((CAPPRM:AS1210 , CAPPRM:CE , CAPPRM:MHLW , CAPPRM:MOM) + MOVOL:400V , CAPPRM:CE + COOL:AIR + MOVOL:500V) + FREQ:50HZ , ((MOVOL:380V , MOVOL:460V) + CAPPRM:ASME , CAPPRM:MHLW + MOVOL:460V) + FREQ:60HZ , CAPPRM:MHLW + COOL:AIR + MOVOL:200V) + CAPPRE:IEC , ((MOVOL:230V , MOVOL:575V) + COOL:AIR , MOVOL:460V) + CAPPRE:ULCUL + CAPPRM:ASME + FREQ:60HZ) + IDRY:N + MODEL:GA90VP_16

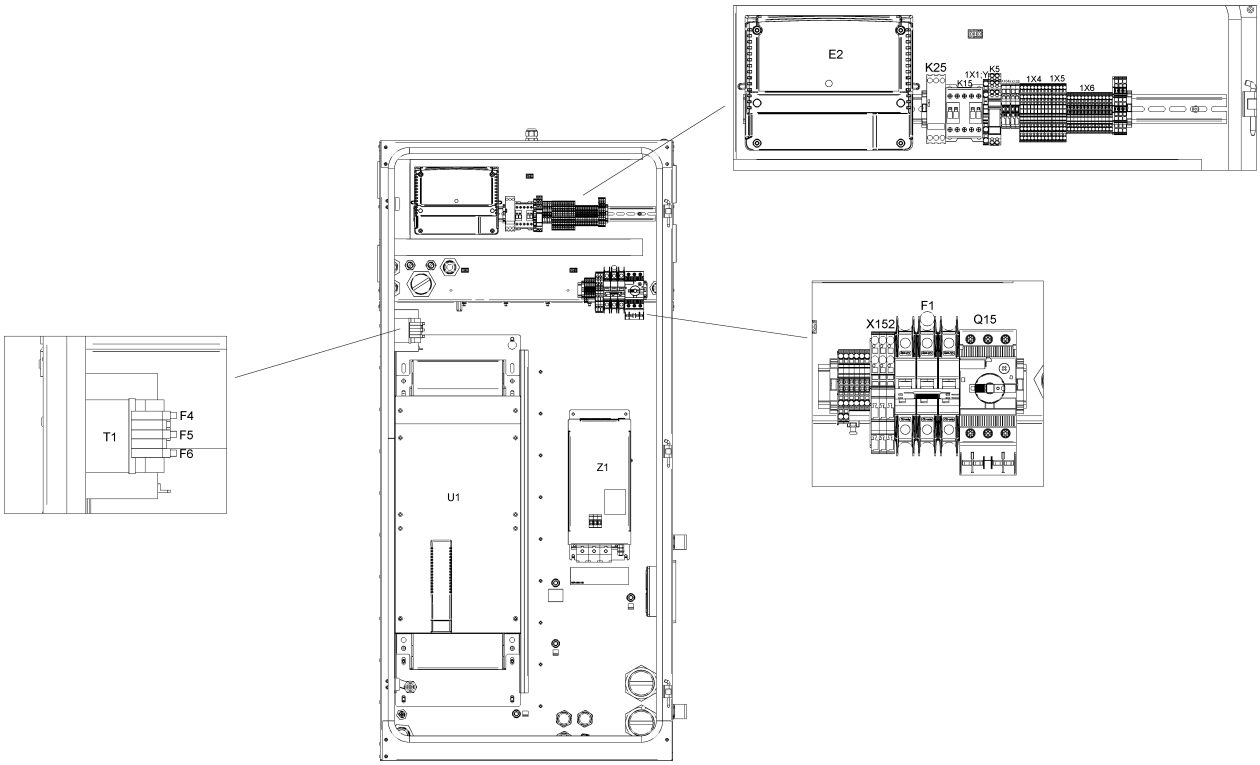

21.15 - Cubicle components GA 90 VSD+ - (200V-380V-460V/60Hz - IEC, 230V-460V-575V/60Hz - UL-cUL, 200V-400V-500V/50Hz - IEC) - Pack (12/12/2018 - 16/12/2019)

((((CAPPRM:AS1210 , CAPPRM:CE , CAPPRM:MHLW , CAPPRM:MOM) + MOVOL:400V , CAPPRM:CE + COOL:AIR + MOVOL:500V) + FREQ:50HZ , ((MOVOL:380V , MOVOL:460V) + CAPPRM:ASME , CAPPRM:MHLW + MOVOL:460V) + FREQ:60HZ , CAPPRM:MHLW + COOL:AIR + MOVOL:200V) + CAPPRE:IEC , ((MOVOL:230V , MOVOL:575V) + COOL:AIR , MOVOL:460V) + CAPPRE:ULCUL + CAPPRM:ASME + FREQ:60HZ) + IDRY:N + MODEL:GA90VP_16

Ref	Part Number	Qty	Name	Validity	EL
	1631 2079 00	1	NANOPERMRING	**(12/12/2018 - 24/02/2019)** **(25/02/2019 - 05/12/2019)** ((((CAPPRM:AS1210 , CAPPRM:CE , CAPPRM:MHLW , CAPPRM:MOM) + MOVOL:400V , CAPPRM:CE + MOVOL:500V , CAPPRM:MHLW + MOVOL:200V) + FREQ:50HZ , ((MOVOL:200V , MOVOL:460V) + CAPPRM:MHLW , (MOVOL:380V , MOVOL:460V) + CAPPRM:ASME) + FREQ:60HZ) + CAPPRE:IEC , (MOVOL:230V , MOVOL:460V , MOVOL:575V) + CAPPRE:ULCUL + CAPPRM:ASME + FREQ:60HZ) + COOL:AIR **(06/12/2019 - 16/12/2019)** ((((CAPPRM:AS1210 , CAPPRM:CE , CAPPRM:MHLW , CAPPRM:MOM) + MOVOL:400V , CAPPRM:MHLW + MOVOL:200V) + FREQ:50HZ , ((MOVOL:200V , MOVOL:460V) + CAPPRM:MHLW , (MOVOL:380V , MOVOL:460V) + CAPPRM:ASME) + FREQ:60HZ) + CAPPRE:IEC , (MOVOL:230V , MOVOL:460V , MOVOL:575V) + CAPPRE:ULCUL + CAPPRM:ASME + FREQ:60HZ) + COOL:AIR	
	Electrical legend:	Nanoperm ring			
	0697 9811 17	2	PLUG	**(12/12/2018 - 24/02/2019)** **(25/02/2019 - 05/12/2019)** ((((CAPPRM:AS1210 , CAPPRM:CE , CAPPRM:MHLW , CAPPRM:MOM) + MOVOL:400V , CAPPRM:CE + MOVOL:500V , CAPPRM:MHLW + MOVOL:200V) + FREQ:50HZ , ((MOVOL:200V , MOVOL:460V) + CAPPRM:MHLW , (MOVOL:380V , MOVOL:460V) + CAPPRM:ASME) + FREQ:60HZ) + CAPPRE:IEC , (MOVOL:230V , MOVOL:460V , MOVOL:575V) + CAPPRE:ULCUL + CAPPRM:ASME + FREQ:60HZ) + COOL:AIR **(06/12/2019 - 16/12/2019)** ((((CAPPRM:AS1210 , CAPPRM:CE , CAPPRM:MHLW , CAPPRM:MOM) + MOVOL:400V , CAPPRM:MHLW + MOVOL:200V) + FREQ:50HZ , ((MOVOL:200V , MOVOL:460V) + CAPPRM:MHLW , (MOVOL:380V , MOVOL:460V) + CAPPRM:ASME) + FREQ:60HZ) + CAPPRE:IEC , (MOVOL:230V , MOVOL:460V , MOVOL:575V) + CAPPRE:ULCUL + CAPPRM:ASME + FREQ:60HZ) + COOL:AIR	
	Electrical legend:	Plug for transfo supply			
	0989 3700 48	2	NUT	**(12/12/2018 - 24/02/2019)** **(25/02/2019 - 05/12/2019)** ((((CAPPRM:AS1210 , CAPPRM:CE , CAPPRM:MHLW , CAPPRM:MOM) + MOVOL:400V , CAPPRM:CE + MOVOL:500V , CAPPRM:MHLW + MOVOL:200V) + FREQ:50HZ , ((MOVOL:200V , MOVOL:460V) + CAPPRM:MHLW , (MOVOL:380V , MOVOL:460V) + CAPPRM:ASME) + FREQ:60HZ) + CAPPRE:IEC , (MOVOL:230V , MOVOL:460V , MOVOL:575V) + CAPPRE:ULCUL + CAPPRM:ASME + FREQ:60HZ) + COOL:AIR **(06/12/2019 - 16/12/2019)** ((((CAPPRM:AS1210 , CAPPRM:CE , CAPPRM:MHLW , CAPPRM:MOM) + MOVOL:400V , CAPPRM:MHLW + MOVOL:200V) + FREQ:50HZ , ((MOVOL:200V , MOVOL:460V) + CAPPRM:MHLW , (MOVOL:380V , MOVOL:460V) + CAPPRM:ASME) + FREQ:60HZ) + CAPPRE:IEC , (MOVOL:230V , MOVOL:460V , MOVOL:575V) + CAPPRE:ULCUL + CAPPRM:ASME + FREQ:60HZ) + COOL:AIR	
	Electrical legend:	Nut for transfo supply			

Legend:

CAPPRE:IEC - Component approval electrical:IEC
CAPPRM:ASME - Component approval mechanical:ASME
CAPPRM:MOM - Component approval mechanical:MOM
FREQ:60HZ - Frequency:60 Hz
MOVOL:200V - Supply voltage:200 V
MOVOL:400V - Supply voltage:400 V
MOVOL:575V - Supply voltage:575 V
CAPPRE:ULCUL - Component approval electrical:UL/cUL
CAPPRM:CE - Component approval mechanical:CE
COOL:AIR - Cooling:Air cooled
IDRY:N - Integrated dryer:No
MOVOL:230V - Supply voltage:230 V
MOVOL:460V - Supply voltage:460 V
CAPPRM:AS1210 - Component approval mechanical:AS1210
CAPPRM:MHLW - Component approval mechanical:MHLW
FREQ:50HZ - Frequency:50 Hz
MODEL:GA90VP_16 - Model:GA 90VSD+
MOVOL:380V - Supply voltage:380 V
MOVOL:500V - Supply voltage:500 V

21.15 - Cubicle components GA 90 VSD+ - (200V-380V-460V/60Hz - IEC, 230V-460V-575V/60Hz - UL-cUL, 200V-400V-500V/50Hz - IEC) - Pack (12/12/2018 - 16/12/2019)

((((CAPPRM:AS1210 , CAPPRM:CE , CAPPRM:MHLW , CAPPRM:MOM) + MOVOL:400V , CAPPRM:CE + COOL:AIR + MOVOL:500V) + FREQ:50HZ , ((MOVOL:380V , MOVOL:460V) + CAPPRM:ASME , CAPPRM:MHLW + MOVOL:460V) + FREQ:60HZ , CAPPRM:MHLW + COOL:AIR + MOVOL:200V) + CAPPRE:IEC , ((MOVOL:230V , MOVOL:575V) + COOL:AIR , MOVOL:460V) + CAPPRE:ULCUL + CAPPRM:ASME + FREQ:60HZ) + IDRY:N + MODEL:GA90VP_16

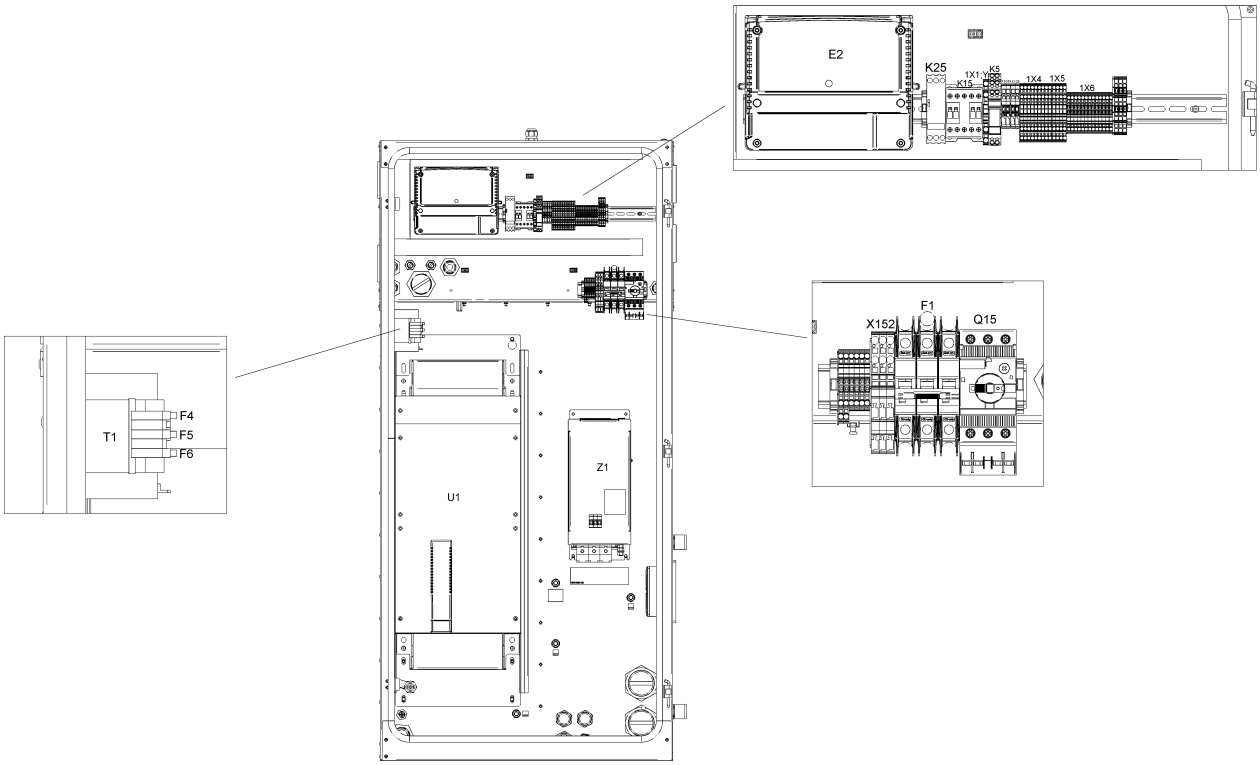

21.15 - Cubicle components GA 90 VSD+ - (200V-380V-460V/60Hz - IEC, 230V-460V-575V/60Hz - UL-cUL, 200V-400V-500V/50Hz - IEC) - Pack (12/12/2018 - 16/12/2019)

((((CAPPRM:AS1210 , CAPPRM:CE , CAPPRM:MHLW , CAPPRM:MOM) + MOVOL:400V , CAPPRM:CE + COOL:AIR + MOVOL:500V) + FREQ:50HZ , ((MOVOL:380V , MOVOL:460V) + CAPPRM:ASME , CAPPRM:MHLW + MOVOL:460V) + FREQ:60HZ , CAPPRM:MHLW + COOL:AIR + MOVOL:200V) + CAPPRE:IEC , ((MOVOL:230V , MOVOL:575V) + COOL:AIR , MOVOL:460V) + CAPPRE:ULCUL + CAPPRM:ASME + FREQ:60HZ) + IDRY:N + MODEL:GA90VP_16

Ref	Part Number	Qty	Name	Validity	EL
	0698 5140 72	1	CABLE GLAND	**(12/12/2018 - 24/02/2019)** **(25/02/2019 - 05/12/2019)** ((((CAPPRM:AS1210 , CAPPRM:CE , CAPPRM:MHLW , CAPPRM:MOM) + MOVOL:400V , CAPPRM:CE + MOVOL:500V , CAPPRM:MHLW + MOVOL:200V) + FREQ:50HZ , ((MOVOL:200V , MOVOL:460V) + CAPPRM:MHLW , (MOVOL:380V , MOVOL:460V) + CAPPRM:ASME) + FREQ:60HZ) + CAPPRE:IEC , (MOVOL:230V , MOVOL:460V , MOVOL:575V) + CAPPRE:ULCUL + CAPPRM:ASME + FREQ:60HZ) + COOL:AIR **(06/12/2019 - 16/12/2019)** ((((CAPPRM:AS1210 , CAPPRM:CE , CAPPRM:MHLW , CAPPRM:MOM) + MOVOL:400V , CAPPRM:MHLW + MOVOL:200V) + FREQ:50HZ , ((MOVOL:200V , MOVOL:460V) + CAPPRM:MHLW , (MOVOL:380V , MOVOL:460V) + CAPPRM:ASME) + FREQ:60HZ) + CAPPRE:IEC , (MOVOL:230V , MOVOL:460V , MOVOL:575V) + CAPPRE:ULCUL + CAPPRM:ASME + FREQ:60HZ) + COOL:AIR	Fan
	0698 5140 71	1	CABLE GLAND	**(12/12/2018 - 24/02/2019)** **(25/02/2019 - 05/12/2019)** ((((CAPPRM:AS1210 , CAPPRM:CE , CAPPRM:MHLW , CAPPRM:MOM) + MOVOL:400V , CAPPRM:CE + MOVOL:500V , CAPPRM:MHLW + MOVOL:200V) + FREQ:50HZ , ((MOVOL:200V , MOVOL:460V) + CAPPRM:MHLW , (MOVOL:380V , MOVOL:460V) + CAPPRM:ASME) + FREQ:60HZ) + CAPPRE:IEC , (MOVOL:230V , MOVOL:460V , MOVOL:575V) + CAPPRE:ULCUL + CAPPRM:ASME + FREQ:60HZ) + COOL:AIR **(06/12/2019 - 16/12/2019)** ((((CAPPRM:AS1210 , CAPPRM:CE , CAPPRM:MHLW , CAPPRM:MOM) + MOVOL:400V , CAPPRM:MHLW + MOVOL:200V) + FREQ:50HZ , ((MOVOL:200V , MOVOL:460V) + CAPPRM:MHLW , (MOVOL:380V , MOVOL:460V) + CAPPRM:ASME) + FREQ:60HZ) + CAPPRE:IEC , (MOVOL:230V , MOVOL:460V , MOVOL:575V) + CAPPRE:ULCUL + CAPPRM:ASME + FREQ:60HZ) + COOL:AIR	
	Electrical legend:	Ambient sensor			
	0697 9809 20	1	LOCKNUT	**(12/12/2018 - 24/02/2019)** **(25/02/2019 - 05/12/2019)** ((((CAPPRM:AS1210 , CAPPRM:CE , CAPPRM:MHLW , CAPPRM:MOM) + MOVOL:400V , CAPPRM:CE + MOVOL:500V , CAPPRM:MHLW + MOVOL:200V) + FREQ:50HZ , ((MOVOL:200V , MOVOL:460V) + CAPPRM:MHLW , (MOVOL:380V , MOVOL:460V) + CAPPRM:ASME) + FREQ:60HZ) + CAPPRE:IEC , (MOVOL:230V , MOVOL:460V , MOVOL:575V) + CAPPRE:ULCUL + CAPPRM:ASME + FREQ:60HZ) + COOL:AIR **(06/12/2019 - 16/12/2019)** ((((CAPPRM:AS1210 , CAPPRM:CE , CAPPRM:MHLW , CAPPRM:MOM) + MOVOL:400V , CAPPRM:MHLW + MOVOL:200V) + FREQ:50HZ , ((MOVOL:200V , MOVOL:460V) + CAPPRM:MHLW , (MOVOL:380V , MOVOL:460V) + CAPPRM:ASME) + FREQ:60HZ) + CAPPRE:IEC , (MOVOL:230V , MOVOL:460V , MOVOL:575V) + CAPPRE:ULCUL + CAPPRM:ASME + FREQ:60HZ) + COOL:AIR	
	Electrical legend:	Ambient sensor			

Legend:

CAPPRE:IEC - Component approval electrical:IEC
CAPPRE:ULCUL - Component approval electrical:UL/cUL
CAPPRM:AS1210 - Component approval mechanical:AS1210
CAPPRM:ASME - Component approval mechanical:ASME
CAPPRM:CE - Component approval mechanical:CE
CAPPRM:MHLW - Component approval mechanical:MHLW
CAPPRM:MOM - Component approval mechanical:MOM
COOL:AIR - Cooling:Air cooled
FREQ:50HZ - Frequency:50 Hz
FREQ:60HZ - Frequency:60 Hz
IDRY:N - Integrated dryer:No
MODEL:GA90VP_16 - Model:GA 90VSD+
MOVOL:200V - Supply voltage:200 V
MOVOL:230V - Supply voltage:230 V
MOVOL:380V - Supply voltage:380 V
MOVOL:400V - Supply voltage:400 V
MOVOL:460V - Supply voltage:460 V
MOVOL:500V - Supply voltage:500 V
MOVOL:575V - Supply voltage:575 V

21.15 - Cubicle components GA 90 VSD+ - (200V-380V-460V/60Hz - IEC, 230V-460V-575V/60Hz - UL-cUL, 200V-400V-500V/50Hz - IEC) - Pack (12/12/2018 - 16/12/2019)

((((CAPPRM:AS1210 , CAPPRM:CE , CAPPRM:MHLW , CAPPRM:MOM) + MOVOL:400V , CAPPRM:CE + COOL:AIR + MOVOL:500V) + FREQ:50HZ , ((MOVOL:380V , MOVOL:460V) + CAPPRM:ASME , CAPPRM:MHLW + MOVOL:460V) + FREQ:60HZ , CAPPRM:MHLW + COOL:AIR + MOVOL:200V) + CAPPRE:IEC , ((MOVOL:230V , MOVOL:575V) + COOL:AIR , MOVOL:460V) + CAPPRE:ULCUL + CAPPRM:ASME + FREQ:60HZ) + IDRY:N + MODEL:GA90VP_16

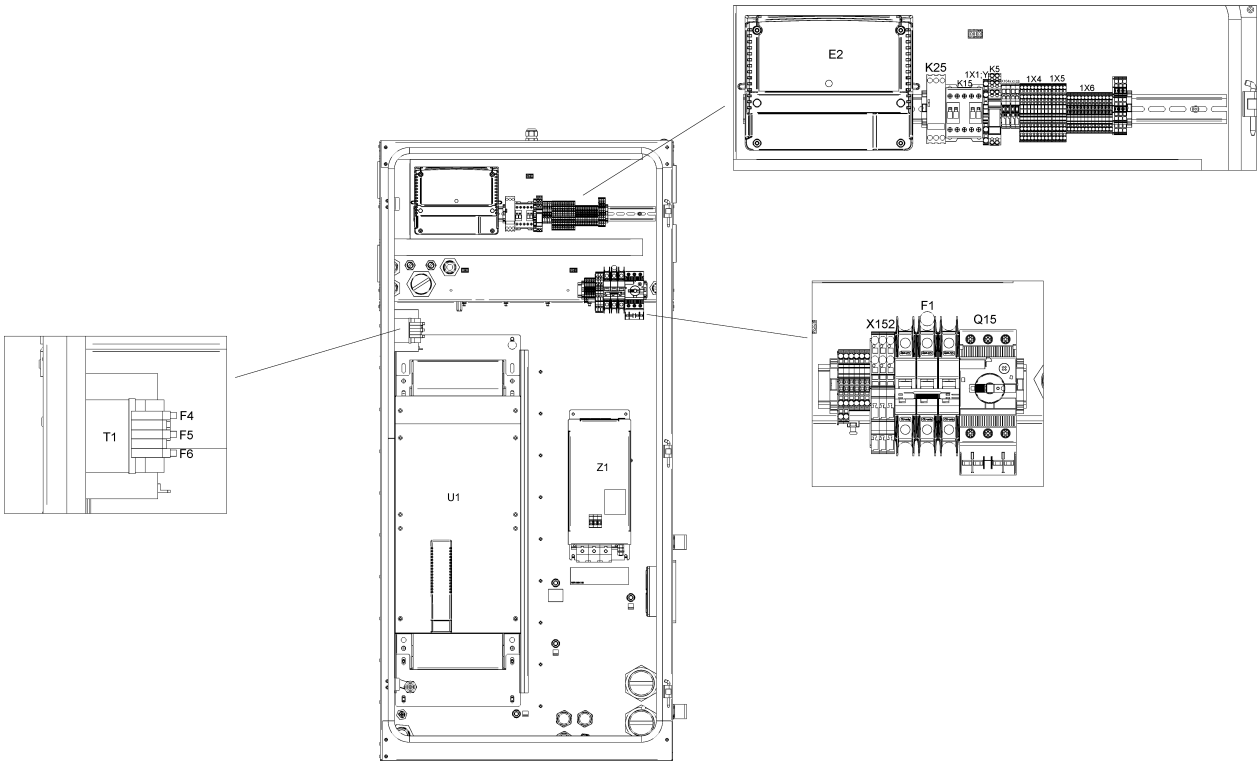

21.15 - Cubicle components GA 90 VSD+ - (200V-380V-460V/60Hz - IEC, 230V-460V-575V/60Hz - UL-cUL, 200V-400V-500V/50Hz - IEC) - Pack (12/12/2018 - 16/12/2019)

((((CAPPRM:AS1210 , CAPPRM:CE , CAPPRM:MHLW , CAPPRM:MOM) + MOVOL:400V , CAPPRM:CE + COOL:AIR + MOVOL:500V) + FREQ:50HZ , ((MOVOL:380V , MOVOL:460V) + CAPPRM:ASME , CAPPRM:MHLW + MOVOL:460V) + FREQ:60HZ , CAPPRM:MHLW + COOL:AIR + MOVOL:200V) + CAPPRE:IEC , ((MOVOL:230V , MOVOL:575V) + COOL:AIR , MOVOL:460V) + CAPPRE:ULCUL + CAPPRM:ASME + FREQ:60HZ) + IDRY:N + MODEL:GA90VP_16

Ref	Part Number	Qty	Name	Validity	EL
	1089 9556 44	1	FAN WITH FILTER	**(12/12/2018 - 24/02/2019)** **(25/02/2019 - 05/12/2019)** ((((CAPPRM:AS1210 , CAPPRM:CE , CAPPRM:MHLW , CAPPRM:MOM) + MOVOL:400V , CAPPRM:CE + MOVOL:500V , CAPPRM:MHLW + MOVOL:200V) + FREQ:50HZ , ((MOVOL:200V , MOVOL:460V) + CAPPRM:MHLW , (MOVOL:380V , MOVOL:460V) + CAPPRM:ASME) + FREQ:60HZ) + CAPPRE:IEC , (MOVOL:230V , MOVOL:460V , MOVOL:575V) + CAPPRE:ULCUL + CAPPRM:ASME + FREQ:60HZ) + COOL:AIR **(06/12/2019 - 16/12/2019)** ((((CAPPRM:AS1210 , CAPPRM:CE , CAPPRM:MHLW , CAPPRM:MOM) + MOVOL:400V , CAPPRM:MHLW + MOVOL:200V) + FREQ:50HZ , ((MOVOL:200V , MOVOL:460V) + CAPPRM:MHLW , (MOVOL:380V , MOVOL:460V) + CAPPRM:ASME) + FREQ:60HZ) + CAPPRE:IEC , (MOVOL:230V , MOVOL:460V , MOVOL:575V) + CAPPRE:ULCUL + CAPPRM:ASME + FREQ:60HZ) + COOL:AIR	Cubicle fan
	1089 9556 72	4	AIR INLET WITHOUT FILTER	**(12/12/2018 - 24/02/2019)** **(25/02/2019 - 05/12/2019)** ((((CAPPRM:AS1210 , CAPPRM:CE , CAPPRM:MHLW , CAPPRM:MOM) + MOVOL:400V , CAPPRM:CE + MOVOL:500V , CAPPRM:MHLW + MOVOL:200V) + FREQ:50HZ , ((MOVOL:200V , MOVOL:460V) + CAPPRM:MHLW , (MOVOL:380V , MOVOL:460V) + CAPPRM:ASME) + FREQ:60HZ) + CAPPRE:IEC , (MOVOL:230V , MOVOL:460V , MOVOL:575V) + CAPPRE:ULCUL + CAPPRM:ASME + FREQ:60HZ) + COOL:AIR **(06/12/2019 - 16/12/2019)** ((((CAPPRM:AS1210 , CAPPRM:CE , CAPPRM:MHLW , CAPPRM:MOM) + MOVOL:400V , CAPPRM:MHLW + MOVOL:200V) + FREQ:50HZ , ((MOVOL:200V , MOVOL:460V) + CAPPRM:MHLW , (MOVOL:380V , MOVOL:460V) + CAPPRM:ASME) + FREQ:60HZ) + CAPPRE:IEC , (MOVOL:230V , MOVOL:460V , MOVOL:575V) + CAPPRE:ULCUL + CAPPRM:ASME + FREQ:60HZ) + COOL:AIR	Filter grid
	1088 0032 09	1	CONNECTOR	**(12/12/2018 - 24/02/2019)** **(25/02/2019 - 05/12/2019)** ((((CAPPRM:AS1210 , CAPPRM:CE , CAPPRM:MHLW , CAPPRM:MOM) + MOVOL:400V , CAPPRM:CE + MOVOL:500V , CAPPRM:MHLW + MOVOL:200V) + FREQ:50HZ , ((MOVOL:200V , MOVOL:460V) + CAPPRM:MHLW , (MOVOL:380V , MOVOL:460V) + CAPPRM:ASME) + FREQ:60HZ) + CAPPRE:IEC , (MOVOL:230V , MOVOL:460V , MOVOL:575V) + CAPPRE:ULCUL + CAPPRM:ASME + FREQ:60HZ) + COOL:AIR **(06/12/2019 - 16/12/2019)** ((((CAPPRM:AS1210 , CAPPRM:CE , CAPPRM:MHLW , CAPPRM:MOM) + MOVOL:400V , CAPPRM:MHLW + MOVOL:200V) + FREQ:50HZ , ((MOVOL:200V , MOVOL:460V) + CAPPRM:MHLW , (MOVOL:380V , MOVOL:460V) + CAPPRM:ASME) + FREQ:60HZ) + CAPPRE:IEC , (MOVOL:230V , MOVOL:460V , MOVOL:575V) + CAPPRE:ULCUL + CAPPRM:ASME + FREQ:60HZ) + COOL:AIR	X3

Legend:

CAPPRE:IEC - Component approval electrical:IEC
CAPPRE:ULCUL - Component approval electrical:UL/cUL
CAPPRM:AS1210 - Component approval mechanical:AS1210
CAPPRM:ASME - Component approval mechanical:ASME
CAPPRM:CE - Component approval mechanical:CE
CAPPRM:MHLW - Component approval mechanical:MHLW
CAPPRM:MOM - Component approval mechanical:MOM
COOL:AIR - Cooling:Air cooled
FREQ:50HZ - Frequency:50 Hz
FREQ:60HZ - Frequency:60 Hz
IDRY:N - Integrated dryer:No
MODEL:GA90VP_16 - Model:GA 90VSD+
MOVOL:200V - Supply voltage:200 V
MOVOL:230V - Supply voltage:230 V
MOVOL:380V - Supply voltage:380 V
MOVOL:400V - Supply voltage:400 V
MOVOL:460V - Supply voltage:460 V
MOVOL:500V - Supply voltage:500 V
MOVOL:575V - Supply voltage:575 V

21.15 - Cubicle components GA 90 VSD+ - (200V-380V-460V/60Hz - IEC, 230V-460V-575V/60Hz - UL-cUL, 200V-400V-500V/50Hz - IEC) - Pack (12/12/2018 - 16/12/2019)

((((CAPPRM:AS1210 , CAPPRM:CE , CAPPRM:MHLW , CAPPRM:MOM) + MOVOL:400V , CAPPRM:CE + COOL:AIR + MOVOL:500V) + FREQ:50HZ , ((MOVOL:380V , MOVOL:460V) + CAPPRM:ASME , CAPPRM:MHLW + MOVOL:460V) + FREQ:60HZ , CAPPRM:MHLW + COOL:AIR + MOVOL:200V) + CAPPRE:IEC , ((MOVOL:230V , MOVOL:575V) + COOL:AIR , MOVOL:460V) + CAPPRE:ULCUL + CAPPRM:ASME + FREQ:60HZ) + IDRY:N + MODEL:GA90VP_16

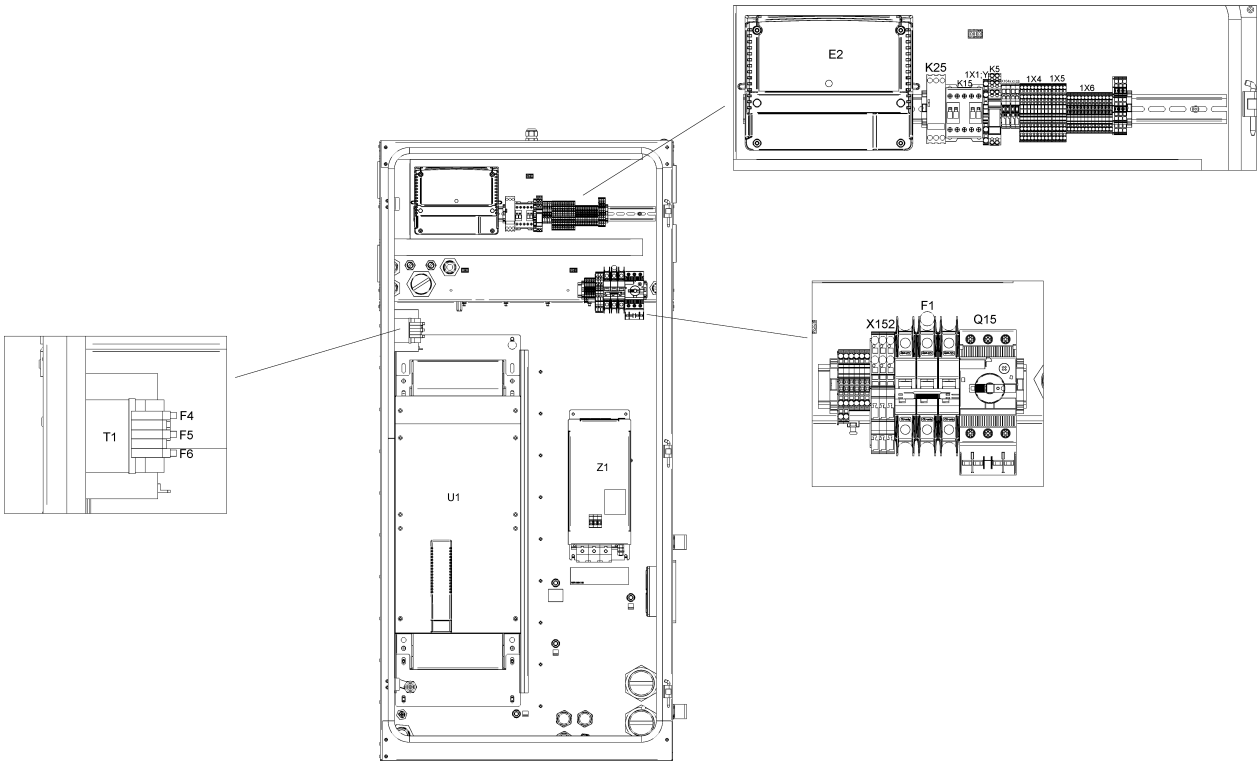

21.15 - Cubicle components GA 90 VSD+ - (200V-380V-460V/60Hz - IEC, 230V-460V-575V/60Hz - UL-cUL, 200V-400V-500V/50Hz - IEC) - Pack (12/12/2018 - 16/12/2019)

((((CAPPRM:AS1210 , CAPPRM:CE , CAPPRM:MHLW , CAPPRM:MOM) + MOVOL:400V , CAPPRM:CE + COOL:AIR + MOVOL:500V) + FREQ:50HZ , ((MOVOL:380V , MOVOL:460V) + CAPPRM:ASME , CAPPRM:MHLW + MOVOL:460V) + FREQ:60HZ , CAPPRM:MHLW + COOL:AIR + MOVOL:200V) + CAPPRE:IEC , ((MOVOL:230V , MOVOL:575V) + COOL:AIR , MOVOL:460V) + CAPPRE:ULCUL + CAPPRM:ASME + FREQ:60HZ) + IDRY:N + MODEL:GA90VP_16

Ref	Part Number	Qty	Name	Validity	EL
	1089 9572 06	1	LINE FILTER	**(12/12/2018 - 24/02/2019)** **(25/02/2019 - 05/12/2019)** ((((CAPPRM:AS1210 , CAPPRM:CE , CAPPRM:MHLW , CAPPRM:MOM) + MOVOL:400V , CAPPRM:CE + MOVOL:500V , CAPPRM:MHLW + MOVOL:200V) + FREQ:50HZ , ((MOVOL:200V , MOVOL:460V) + CAPPRM:MHLW , (MOVOL:380V , MOVOL:460V) + CAPPRM:ASME) + FREQ:60HZ) + CAPPRE:IEC , (MOVOL:230V , MOVOL:460V , MOVOL:575V) + CAPPRE:ULCUL + CAPPRM:ASME + FREQ:60HZ) + COOL:AIR **(06/12/2019 - 16/12/2019)** ((((CAPPRM:AS1210 , CAPPRM:CE , CAPPRM:MHLW , CAPPRM:MOM) + MOVOL:400V , CAPPRM:MHLW + MOVOL:200V) + FREQ:50HZ , ((MOVOL:200V , MOVOL:460V) + CAPPRM:MHLW , (MOVOL:380V , MOVOL:460V) + CAPPRM:ASME) + FREQ:60HZ) + CAPPRE:IEC , (MOVOL:230V , MOVOL:460V , MOVOL:575V) + CAPPRE:ULCUL + CAPPRM:ASME + FREQ:60HZ) + COOL:AIR	Z1 for 90kw
	1089 9562 04	1	STRAP	**(12/12/2018 - 24/02/2019)** **(25/02/2019 - 05/12/2019)** ((((CAPPRM:AS1210 , CAPPRM:CE , CAPPRM:MHLW , CAPPRM:MOM) + MOVOL:400V , CAPPRM:CE + MOVOL:500V , CAPPRM:MHLW + MOVOL:200V) + FREQ:50HZ , ((MOVOL:200V , MOVOL:460V) + CAPPRM:MHLW , (MOVOL:380V , MOVOL:460V) + CAPPRM:ASME) + FREQ:60HZ) + CAPPRE:IEC , (MOVOL:230V , MOVOL:460V , MOVOL:575V) + CAPPRE:ULCUL + CAPPRM:ASME + FREQ:60HZ) + COOL:AIR **(06/12/2019 - 16/12/2019)** ((((CAPPRM:AS1210 , CAPPRM:CE , CAPPRM:MHLW , CAPPRM:MOM) + MOVOL:400V , CAPPRM:MHLW + MOVOL:200V) + FREQ:50HZ , ((MOVOL:200V , MOVOL:460V) + CAPPRM:MHLW , (MOVOL:380V , MOVOL:460V) + CAPPRM:ASME) + FREQ:60HZ) + CAPPRE:IEC , (MOVOL:230V , MOVOL:460V , MOVOL:575V) + CAPPRE:ULCUL + CAPPRM:ASME + FREQ:60HZ) + COOL:AIR	HF-screen
	1089 9514 56	1	TRANSFORMER	**(12/12/2018 - 24/02/2019)** **(25/02/2019 - 05/12/2019)** ((((CAPPRM:AS1210 , CAPPRM:CE , CAPPRM:MHLW , CAPPRM:MOM) + MOVOL:400V , CAPPRM:CE + MOVOL:500V , CAPPRM:MHLW + MOVOL:200V) + FREQ:50HZ , ((MOVOL:200V , MOVOL:460V) + CAPPRM:MHLW , (MOVOL:380V , MOVOL:460V) + CAPPRM:ASME) + FREQ:60HZ) + CAPPRE:IEC , (MOVOL:230V , MOVOL:460V , MOVOL:575V) + CAPPRE:ULCUL + CAPPRM:ASME + FREQ:60HZ) + COOL:AIR **(06/12/2019 - 16/12/2019)** ((((CAPPRM:AS1210 , CAPPRM:CE , CAPPRM:MHLW , CAPPRM:MOM) + MOVOL:400V , CAPPRM:MHLW + MOVOL:200V) + FREQ:50HZ , ((MOVOL:200V , MOVOL:460V) + CAPPRM:MHLW , (MOVOL:380V , MOVOL:460V) + CAPPRM:ASME) + FREQ:60HZ) + CAPPRE:IEC , (MOVOL:230V , MOVOL:460V , MOVOL:575V) + CAPPRE:ULCUL + CAPPRM:ASME + FREQ:60HZ) + COOL:AIR	T1

Legend:

CAPPRE:IEC - Component approval electrical:IEC
CAPPRE:ULCUL - Component approval electrical:UL/cUL
CAPPRM:AS1210 - Component approval mechanical:AS1210
CAPPRM:ASME - Component approval mechanical:ASME
CAPPRM:CE - Component approval mechanical:CE
CAPPRM:MHLW - Component approval mechanical:MHLW
CAPPRM:MOM - Component approval mechanical:MOM
COOL:AIR - Cooling:Air cooled
FREQ:50HZ - Frequency:50 Hz
FREQ:60HZ - Frequency:60 Hz
IDRY:N - Integrated dryer:No
MODEL:GA90VP_16 - Model:GA 90VSD+
MOVOL:200V - Supply voltage:200 V
MOVOL:230V - Supply voltage:230 V
MOVOL:380V - Supply voltage:380 V
MOVOL:400V - Supply voltage:400 V
MOVOL:460V - Supply voltage:460 V
MOVOL:500V - Supply voltage:500 V
MOVOL:575V - Supply voltage:575 V

21.15 - Cubicle components GA 90 VSD+ - (200V-380V-460V/60Hz - IEC, 230V-460V-575V/60Hz - UL-cUL, 200V-400V-500V/50Hz - IEC) - Pack (12/12/2018 - 16/12/2019)

((((CAPPRM:AS1210 , CAPPRM:CE , CAPPRM:MHLW , CAPPRM:MOM) + MOVOL:400V , CAPPRM:CE + COOL:AIR + MOVOL:500V) + FREQ:50HZ , ((MOVOL:380V , MOVOL:460V) + CAPPRM:ASME , CAPPRM:MHLW + MOVOL:460V) + FREQ:60HZ , CAPPRM:MHLW + COOL:AIR + MOVOL:200V) + CAPPRE:IEC , ((MOVOL:230V , MOVOL:575V) + COOL:AIR , MOVOL:460V) + CAPPRE:ULCUL + CAPPRM:ASME + FREQ:60HZ) + IDRY:N + MODEL:GA90VP_16

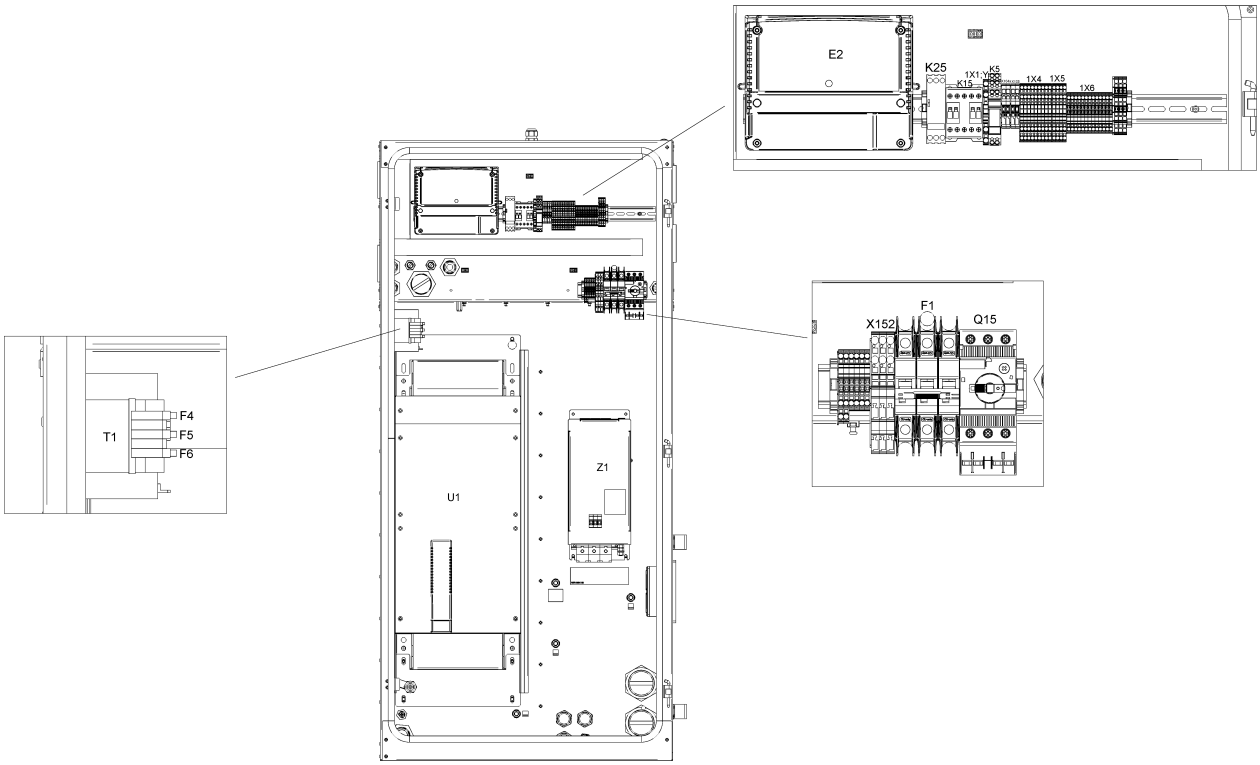

21.15 - Cubicle components GA 90 VSD+ - (200V-380V-460V/60Hz - IEC, 230V-460V-575V/60Hz - UL-cUL, 200V-400V-500V/50Hz - IEC) - Pack (12/12/2018 - 16/12/2019)

((((CAPPRM:AS1210 , CAPPRM:CE , CAPPRM:MHLW , CAPPRM:MOM) + MOVOL:400V , CAPPRM:CE + COOL:AIR + MOVOL:500V) + FREQ:50HZ , ((MOVOL:380V , MOVOL:460V) + CAPPRM:ASME , CAPPRM:MHLW + MOVOL:460V) + FREQ:60HZ , CAPPRM:MHLW + COOL:AIR + MOVOL:200V) + CAPPRE:IEC , ((MOVOL:230V , MOVOL:575V) + COOL:AIR , MOVOL:460V) + CAPPRE:ULCUL + CAPPRM:ASME + FREQ:60HZ) + IDRY:N + MODEL:GA90VP_16

Ref	Part Number	Qty	Name	Validity	EL
	1089 9522 26	1	CIRCUIT BREAKER	**(12/12/2018 - 24/02/2019)** **(25/02/2019 - 05/12/2019)** ((((CAPPRM:AS1210 , CAPPRM:CE , CAPPRM:MHLW , CAPPRM:MOM) + MOVOL:400V , CAPPRM:CE + MOVOL:500V , CAPPRM:MHLW + MOVOL:200V) + FREQ:50HZ , ((MOVOL:200V , MOVOL:460V) + CAPPRM:MHLW , (MOVOL:380V , MOVOL:460V) + CAPPRM:ASME) + FREQ:60HZ) + CAPPRE:IEC , (MOVOL:230V , MOVOL:460V , MOVOL:575V) + CAPPRE:ULCUL + CAPPRM:ASME + FREQ:60HZ) + COOL:AIR **(06/12/2019 - 16/12/2019)** ((((CAPPRM:AS1210 , CAPPRM:CE , CAPPRM:MHLW , CAPPRM:MOM) + MOVOL:400V , CAPPRM:MHLW + MOVOL:200V) + FREQ:50HZ , ((MOVOL:200V , MOVOL:460V) + CAPPRM:MHLW , (MOVOL:380V , MOVOL:460V) + CAPPRM:ASME) + FREQ:60HZ) + CAPPRE:IEC , (MOVOL:230V , MOVOL:460V , MOVOL:575V) + CAPPRE:ULCUL + CAPPRM:ASME + FREQ:60HZ) + COOL:AIR	F1
	1089 9513 41	1	PUSH BUTTON	**(12/12/2018 - 24/02/2019)** **(25/02/2019 - 05/12/2019)** ((((CAPPRM:AS1210 , CAPPRM:CE , CAPPRM:MHLW , CAPPRM:MOM) + MOVOL:400V , CAPPRM:CE + MOVOL:500V , CAPPRM:MHLW + MOVOL:200V) + FREQ:50HZ , ((MOVOL:200V , MOVOL:460V) + CAPPRM:MHLW , (MOVOL:380V , MOVOL:460V) + CAPPRM:ASME) + FREQ:60HZ) + CAPPRE:IEC , (MOVOL:230V , MOVOL:460V , MOVOL:575V) + CAPPRE:ULCUL + CAPPRM:ASME + FREQ:60HZ) + COOL:AIR **(06/12/2019 - 16/12/2019)** ((((CAPPRM:AS1210 , CAPPRM:CE , CAPPRM:MHLW , CAPPRM:MOM) + MOVOL:400V , CAPPRM:MHLW + MOVOL:200V) + FREQ:50HZ , ((MOVOL:200V , MOVOL:460V) + CAPPRM:MHLW , (MOVOL:380V , MOVOL:460V) + CAPPRM:ASME) + FREQ:60HZ) + CAPPRE:IEC , (MOVOL:230V , MOVOL:460V , MOVOL:575V) + CAPPRE:ULCUL + CAPPRM:ASME + FREQ:60HZ) + COOL:AIR	S3
	1089 9513 28	1	HOLDER	**(12/12/2018 - 24/02/2019)** **(25/02/2019 - 05/12/2019)** ((((CAPPRM:AS1210 , CAPPRM:CE , CAPPRM:MHLW , CAPPRM:MOM) + MOVOL:400V , CAPPRM:CE + MOVOL:500V , CAPPRM:MHLW + MOVOL:200V) + FREQ:50HZ , ((MOVOL:200V , MOVOL:460V) + CAPPRM:MHLW , (MOVOL:380V , MOVOL:460V) + CAPPRM:ASME) + FREQ:60HZ) + CAPPRE:IEC , (MOVOL:230V , MOVOL:460V , MOVOL:575V) + CAPPRE:ULCUL + CAPPRM:ASME + FREQ:60HZ) + COOL:AIR **(06/12/2019 - 16/12/2019)** ((((CAPPRM:AS1210 , CAPPRM:CE , CAPPRM:MHLW , CAPPRM:MOM) + MOVOL:400V , CAPPRM:MHLW + MOVOL:200V) + FREQ:50HZ , ((MOVOL:200V , MOVOL:460V) + CAPPRM:MHLW , (MOVOL:380V , MOVOL:460V) + CAPPRM:ASME) + FREQ:60HZ) + CAPPRE:IEC , (MOVOL:230V , MOVOL:460V , MOVOL:575V) + CAPPRE:ULCUL + CAPPRM:ASME + FREQ:60HZ) + COOL:AIR	S3

Legend:

CAPPRE:IEC - Component approval electrical:IEC
CAPPRE:ULCUL - Component approval electrical:UL/cUL
CAPPRM:AS1210 - Component approval mechanical:AS1210
CAPPRM:ASME - Component approval mechanical:ASME
CAPPRM:CE - Component approval mechanical:CE
CAPPRM:MHLW - Component approval mechanical:MHLW
CAPPRM:MOM - Component approval mechanical:MOM
COOL:AIR - Cooling:Air cooled
FREQ:50HZ - Frequency:50 Hz
FREQ:60HZ - Frequency:60 Hz
IDRY:N - Integrated dryer:No
MODEL:GA90VP_16 - Model:GA 90VSD+
MOVOL:200V - Supply voltage:200 V
MOVOL:230V - Supply voltage:230 V
MOVOL:380V - Supply voltage:380 V
MOVOL:400V - Supply voltage:400 V
MOVOL:460V - Supply voltage:460 V
MOVOL:500V - Supply voltage:500 V
MOVOL:575V - Supply voltage:575 V

21.15 - Cubicle components GA 90 VSD+ - (200V-380V-460V/60Hz - IEC, 230V-460V-575V/60Hz - UL-cUL, 200V-400V-500V/50Hz - IEC) - Pack (12/12/2018 - 16/12/2019)

((((CAPPRM:AS1210 , CAPPRM:CE , CAPPRM:MHLW , CAPPRM:MOM) + MOVOL:400V , CAPPRM:CE + COOL:AIR + MOVOL:500V) + FREQ:50HZ , ((MOVOL:380V , MOVOL:460V) + CAPPRM:ASME , CAPPRM:MHLW + MOVOL:460V) + FREQ:60HZ , CAPPRM:MHLW + COOL:AIR + MOVOL:200V) + CAPPRE:IEC , ((MOVOL:230V , MOVOL:575V) + COOL:AIR , MOVOL:460V) + CAPPRE:ULCUL + CAPPRM:ASME + FREQ:60HZ) + IDRY:N + MODEL:GA90VP_16

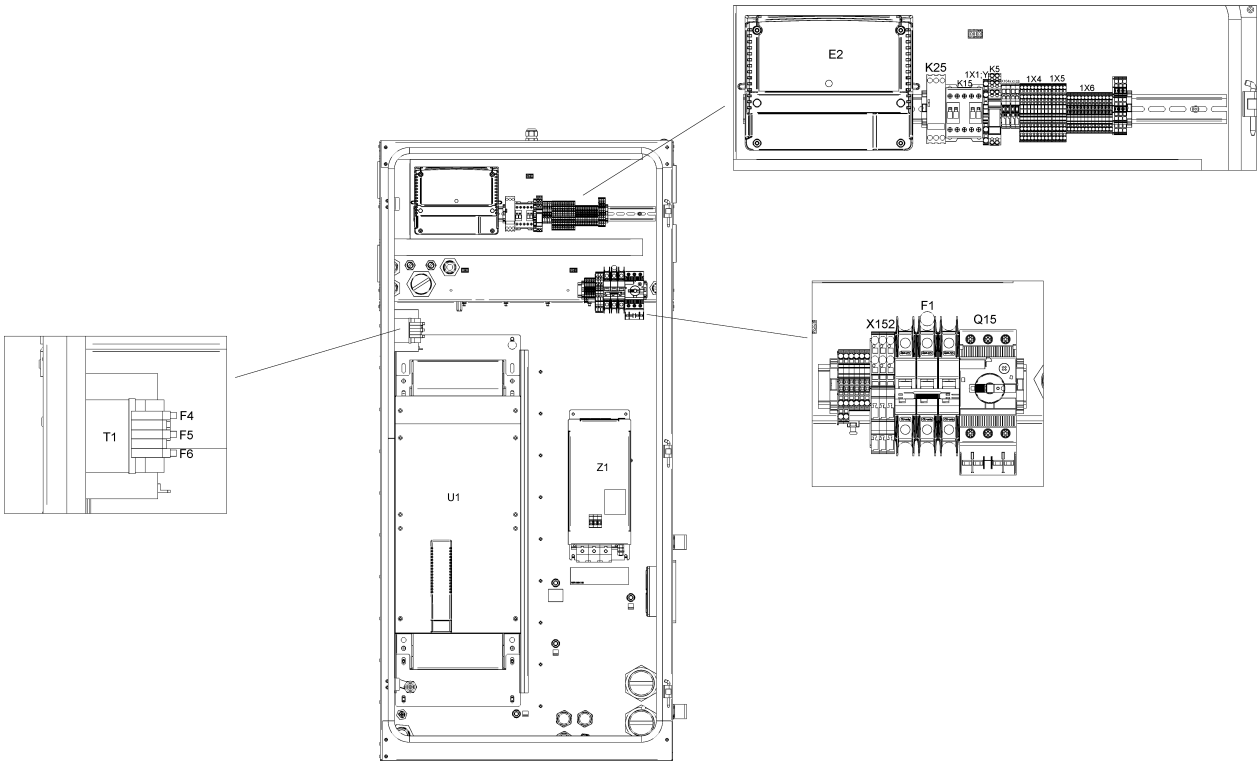

Ref	Part Number	Qty	Name	Validity	EL
	~~1089 9513 30~~	4	CONTACTOR	**(12/12/2018 - 24/02/2019)** **(25/02/2019 - 05/12/2019)** ((((CAPPRM:AS1210 , CAPPRM:CE , CAPPRM:MHLW , CAPPRM:MOM) + MOVOL:400V , CAPPRM:CE + MOVOL:500V , CAPPRM:MHLW + MOVOL:200V) + FREQ:50HZ , ((MOVOL:200V , MOVOL:460V) + CAPPRM:MHLW , (MOVOL:380V , MOVOL:460V) + CAPPRM:ASME) + FREQ:60HZ) + CAPPRE:IEC , (MOVOL:230V , MOVOL:460V , MOVOL:575V) + CAPPRE:ULCUL + CAPPRM:ASME + FREQ:60HZ) + COOL:AIR **(06/12/2019 - 16/12/2019)** ((((CAPPRM:AS1210 , CAPPRM:CE , CAPPRM:MHLW , CAPPRM:MOM) + MOVOL:400V , CAPPRM:MHLW + MOVOL:200V) + FREQ:50HZ , ((MOVOL:200V , MOVOL:460V) + CAPPRM:MHLW , (MOVOL:380V , MOVOL:460V) + CAPPRM:ASME) + FREQ:60HZ) + CAPPRE:IEC , (MOVOL:230V , MOVOL:460V , MOVOL:575V) + CAPPRE:ULCUL + CAPPRM:ASME + FREQ:60HZ) + COOL:AIR	S3
	Substituted by:	1089 9513 04 - CONTACT BLOCK (quantity: 1)			
	1088 0031 02	1	CONNECTOR 2-POLE	**(12/12/2018 - 17/02/2019)**	
	1088 0039 07	3	TERMINAL	**(12/12/2018 - 24/02/2019)** **(25/02/2019 - 05/12/2019)** ((((CAPPRM:AS1210 , CAPPRM:CE , CAPPRM:MHLW , CAPPRM:MOM) + MOVOL:400V , CAPPRM:CE + MOVOL:500V , CAPPRM:MHLW + MOVOL:200V) + FREQ:50HZ , ((MOVOL:200V , MOVOL:460V) + CAPPRM:MHLW , (MOVOL:380V , MOVOL:460V) + CAPPRM:ASME) + FREQ:60HZ) + CAPPRE:IEC , (MOVOL:230V , MOVOL:460V , MOVOL:575V) + CAPPRE:ULCUL + CAPPRM:ASME + FREQ:60HZ) + COOL:AIR **(06/12/2019 - 16/12/2019)** ((((CAPPRM:AS1210 , CAPPRM:CE , CAPPRM:MHLW , CAPPRM:MOM) + MOVOL:400V , CAPPRM:MHLW + MOVOL:200V) + FREQ:50HZ , ((MOVOL:200V , MOVOL:460V) + CAPPRM:MHLW , (MOVOL:380V , MOVOL:460V) + CAPPRM:ASME) + FREQ:60HZ) + CAPPRE:IEC , (MOVOL:230V , MOVOL:460V , MOVOL:575V) + CAPPRE:ULCUL + CAPPRM:ASME + FREQ:60HZ) + COOL:AIR	X152
	1088 0039 05	1	PLATE	**(12/12/2018 - 24/02/2019)** **(25/02/2019 - 05/12/2019)** ((((CAPPRM:AS1210 , CAPPRM:CE , CAPPRM:MHLW , CAPPRM:MOM) + MOVOL:400V , CAPPRM:CE + MOVOL:500V , CAPPRM:MHLW + MOVOL:200V) + FREQ:50HZ , ((MOVOL:200V , MOVOL:460V) + CAPPRM:MHLW , (MOVOL:380V , MOVOL:460V) + CAPPRM:ASME) + FREQ:60HZ) + CAPPRE:IEC , (MOVOL:230V , MOVOL:460V , MOVOL:575V) + CAPPRE:ULCUL + CAPPRM:ASME + FREQ:60HZ) + COOL:AIR **(06/12/2019 - 16/12/2019)** ((((CAPPRM:AS1210 , CAPPRM:CE , CAPPRM:MHLW , CAPPRM:MOM) + MOVOL:400V , CAPPRM:MHLW + MOVOL:200V) + FREQ:50HZ , ((MOVOL:200V , MOVOL:460V) + CAPPRM:MHLW , (MOVOL:380V , MOVOL:460V) + CAPPRM:ASME) + FREQ:60HZ) + CAPPRE:IEC , (MOVOL:230V , MOVOL:460V , MOVOL:575V) + CAPPRE:ULCUL + CAPPRM:ASME + FREQ:60HZ) + COOL:AIR	X152

Legend:

CAPPRE:IEC - Component approval electrical:IEC
CAPPRE:ULCUL - Component approval electrical:UL/cUL
CAPPRM:AS1210 - Component approval mechanical:AS1210
CAPPRM:ASME - Component approval mechanical:ASME
CAPPRM:CE - Component approval mechanical:CE
CAPPRM:MHLW - Component approval mechanical:MHLW
CAPPRM:MOM - Component approval mechanical:MOM
COOL:AIR - Cooling:Air cooled
FREQ:50HZ - Frequency:50 Hz
FREQ:60HZ - Frequency:60 Hz
IDRY:N - Integrated dryer:No
MODEL:GA90VP_16 - Model:GA 90VSD+
MOVOL:200V - Supply voltage:200 V
MOVOL:230V - Supply voltage:230 V
MOVOL:380V - Supply voltage:380 V
MOVOL:400V - Supply voltage:400 V
MOVOL:460V - Supply voltage:460 V
MOVOL:500V - Supply voltage:500 V
MOVOL:575V - Supply voltage:575 V

21.15 - Cubicle components GA 90 VSD+ - (200V-380V-460V/60Hz - IEC, 230V-460V-575V/60Hz - UL-cUL, 200V-400V-500V/50Hz - IEC) - Pack (12/12/2018 - 16/12/2019)

((((CAPPRM:AS1210 , CAPPRM:CE , CAPPRM:MHLW , CAPPRM:MOM) + MOVOL:400V , CAPPRM:CE + COOL:AIR + MOVOL:500V) + FREQ:50HZ , ((MOVOL:380V , MOVOL:460V) + CAPPRM:ASME , CAPPRM:MHLW + MOVOL:460V) + FREQ:60HZ , CAPPRM:MHLW + COOL:AIR + MOVOL:200V) + CAPPRE:IEC , ((MOVOL:230V , MOVOL:575V) + COOL:AIR , MOVOL:460V) + CAPPRE:ULCUL + CAPPRM:ASME + FREQ:60HZ) + IDRY:N + MODEL:GA90VP_16

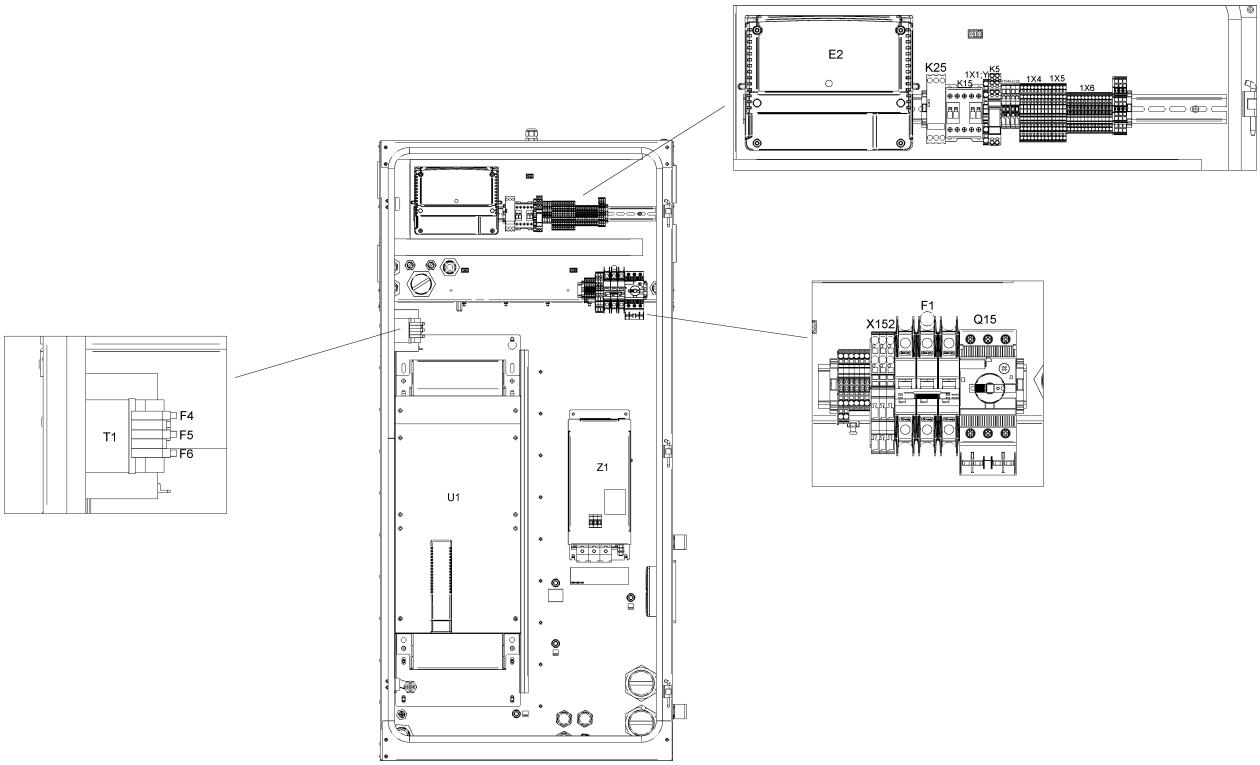

21.15 - Cubicle components GA 90 VSD+ - (200V-380V-460V/60Hz - IEC, 230V-460V-575V/60Hz - UL-cUL, 200V-400V-500V/50Hz - IEC) - Pack (12/12/2018 - 16/12/2019)

((((CAPPRM:AS1210 , CAPPRM:CE , CAPPRM:MHLW , CAPPRM:MOM) + MOVOL:400V , CAPPRM:CE + COOL:AIR + MOVOL:500V) + FREQ:50HZ , ((MOVOL:380V , MOVOL:460V) + CAPPRM:ASME , CAPPRM:MHLW + MOVOL:460V) + FREQ:60HZ , CAPPRM:MHLW + COOL:AIR + MOVOL:200V) + CAPPRE:IEC , ((MOVOL:230V , MOVOL:575V) + COOL:AIR , MOVOL:460V) + CAPPRE:ULCUL + CAPPRM:ASME + FREQ:60HZ) + IDRY:N + MODEL:GA90VP_16

Ref	Part Number	Qty	Name	Validity	EL
	1088 0039 26	1	CONNECTOR	**(12/12/2018 - 24/02/2019)** **(25/02/2019 - 05/12/2019)** ((((CAPPRM:AS1210 , CAPPRM:CE , CAPPRM:MHLW , CAPPRM:MOM) + MOVOL:400V , CAPPRM:CE + MOVOL:500V , CAPPRM:MHLW + MOVOL:200V) + FREQ:50HZ , ((MOVOL:200V , MOVOL:460V) + CAPPRM:MHLW , (MOVOL:380V , MOVOL:460V) + CAPPRM:ASME) + FREQ:60HZ) + CAPPRE:IEC , (MOVOL:230V , MOVOL:460V , MOVOL:575V) + CAPPRE:ULCUL + CAPPRM:ASME + FREQ:60HZ) + COOL:AIR **(06/12/2019 - 16/12/2019)** ((((CAPPRM:AS1210 , CAPPRM:CE , CAPPRM:MHLW , CAPPRM:MOM) + MOVOL:400V , CAPPRM:MHLW + MOVOL:200V) + FREQ:50HZ , ((MOVOL:200V , MOVOL:460V) + CAPPRM:MHLW , (MOVOL:380V , MOVOL:460V) + CAPPRM:ASME) + FREQ:60HZ) + CAPPRE:IEC , (MOVOL:230V , MOVOL:460V , MOVOL:575V) + CAPPRE:ULCUL + CAPPRM:ASME + FREQ:60HZ) + COOL:AIR	
	Electrical legend:	X152 (remove coding pin 1,3)			
	1088 0037 99	4	PIN	**(12/12/2018 - 24/02/2019)** **(25/02/2019 - 05/12/2019)** ((((CAPPRM:AS1210 , CAPPRM:CE , CAPPRM:MHLW , CAPPRM:MOM) + MOVOL:400V , CAPPRM:CE + MOVOL:500V , CAPPRM:MHLW + MOVOL:200V) + FREQ:50HZ , ((MOVOL:200V , MOVOL:460V) + CAPPRM:MHLW , (MOVOL:380V , MOVOL:460V) + CAPPRM:ASME) + FREQ:60HZ) + CAPPRE:IEC , (MOVOL:230V , MOVOL:460V , MOVOL:575V) + CAPPRE:ULCUL + CAPPRM:ASME + FREQ:60HZ) + COOL:AIR **(06/12/2019 - 16/12/2019)** ((((CAPPRM:AS1210 , CAPPRM:CE , CAPPRM:MHLW , CAPPRM:MOM) + MOVOL:400V , CAPPRM:MHLW + MOVOL:200V) + FREQ:50HZ , ((MOVOL:200V , MOVOL:460V) + CAPPRM:MHLW , (MOVOL:380V , MOVOL:460V) + CAPPRM:ASME) + FREQ:60HZ) + CAPPRE:IEC , (MOVOL:230V , MOVOL:460V , MOVOL:575V) + CAPPRE:ULCUL + CAPPRM:ASME + FREQ:60HZ) + COOL:AIR	X152:1; 3
	~~1088 0031 81~~	7	END STOP BRACKET 6MM	**(12/12/2018 - 24/02/2019)** **(25/02/2019 - 05/12/2019)** ((((CAPPRM:AS1210 , CAPPRM:CE , CAPPRM:MHLW , CAPPRM:MOM) + MOVOL:400V , CAPPRM:CE + MOVOL:500V , CAPPRM:MHLW + MOVOL:200V) + FREQ:50HZ , ((MOVOL:200V , MOVOL:460V) + CAPPRM:MHLW , (MOVOL:380V , MOVOL:460V) + CAPPRM:ASME) + FREQ:60HZ) + CAPPRE:IEC , (MOVOL:230V , MOVOL:460V , MOVOL:575V) + CAPPRE:ULCUL + CAPPRM:ASME + FREQ:60HZ) + COOL:AIR **(06/12/2019 - 16/12/2019)** ((((CAPPRM:AS1210 , CAPPRM:CE , CAPPRM:MHLW , CAPPRM:MOM) + MOVOL:400V , CAPPRM:MHLW + MOVOL:200V) + FREQ:50HZ , ((MOVOL:200V , MOVOL:460V) + CAPPRM:MHLW , (MOVOL:380V , MOVOL:460V) + CAPPRM:ASME) + FREQ:60HZ) + CAPPRE:IEC , (MOVOL:230V , MOVOL:460V , MOVOL:575V) + CAPPRE:ULCUL + CAPPRM:ASME + FREQ:60HZ) + COOL:AIR	
	Electrical legend:	Connector/terminal rail			
	Substituted by:	1089 0577 82 - END RETAINER (quantity: 1)			

Legend:

CAPPRE:IEC - Component approval electrical:IEC
CAPPRM:ASME - Component approval mechanical:ASME
CAPPRM:MOM - Component approval mechanical:MOM
FREQ:60HZ - Frequency:60 Hz
MOVOL:200V - Supply voltage:200 V
MOVOL:400V - Supply voltage:400 V
MOVOL:575V - Supply voltage:575 V
CAPPRE:ULCUL - Component approval electrical:UL/cUL
CAPPRM:CE - Component approval mechanical:CE
COOL:AIR - Cooling:Air cooled
IDRY:N - Integrated dryer:No
MOVOL:230V - Supply voltage:230 V
MOVOL:460V - Supply voltage:460 V
CAPPRM:AS1210 - Component approval mechanical:AS1210
CAPPRM:MHLW - Component approval mechanical:MHLW
FREQ:50HZ - Frequency:50 Hz
MODEL:GA90VP_16 - Model:GA 90VSD+
MOVOL:380V - Supply voltage:380 V
MOVOL:500V - Supply voltage:500 V

21.15 - Cubicle components GA 90 VSD+ - (200V-380V-460V/60Hz - IEC, 230V-460V-575V/60Hz - UL-cUL, 200V-400V-500V/50Hz - IEC) - Pack (12/12/2018 - 16/12/2019)

((((CAPPRM:AS1210 , CAPPRM:CE , CAPPRM:MHLW , CAPPRM:MOM) + MOVOL:400V , CAPPRM:CE + COOL:AIR + MOVOL:500V) + FREQ:50HZ , ((MOVOL:380V , MOVOL:460V) + CAPPRM:ASME , CAPPRM:MHLW + MOVOL:460V) + FREQ:60HZ , CAPPRM:MHLW + COOL:AIR + MOVOL:200V) + CAPPRE:IEC , ((MOVOL:230V , MOVOL:575V) + COOL:AIR , MOVOL:460V) + CAPPRE:ULCUL + CAPPRM:ASME + FREQ:60HZ) + IDRY:N + MODEL:GA90VP_16

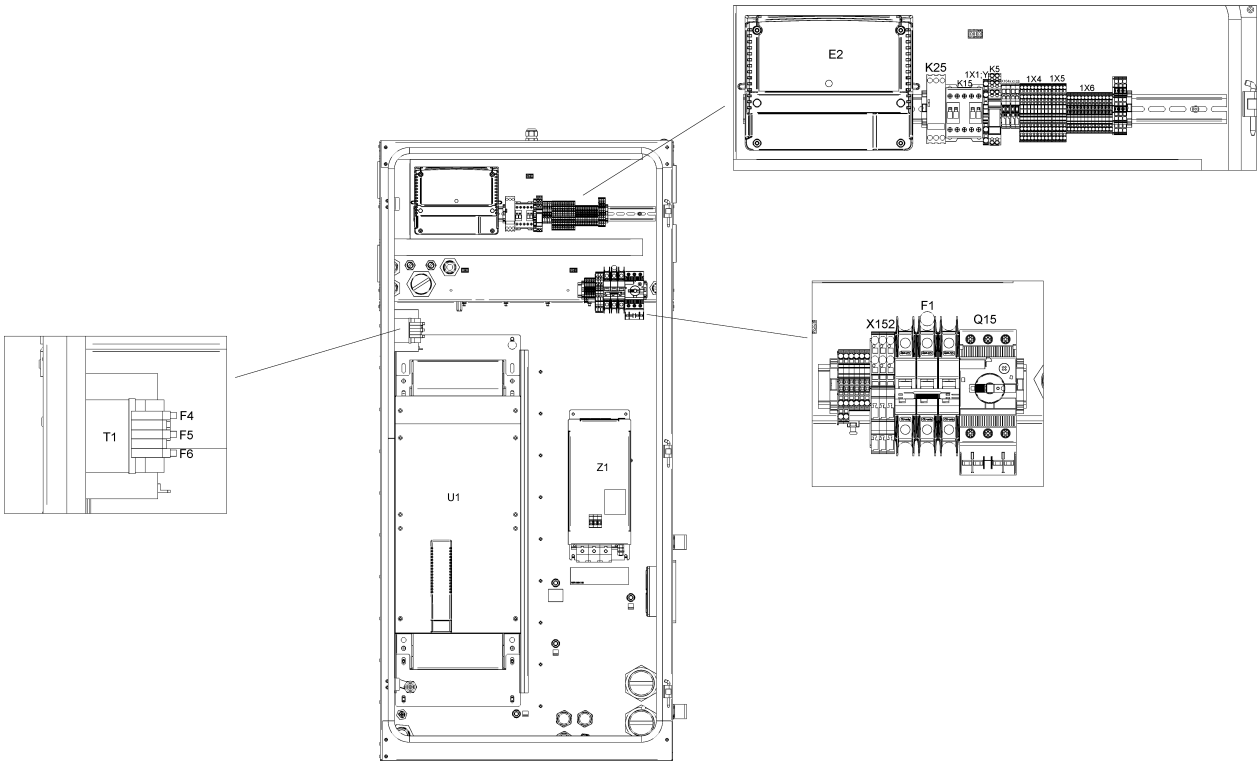

21.15 - Cubicle components GA 90 VSD+ - (200V-380V-460V/60Hz - IEC, 230V-460V-575V/60Hz - UL-cUL, 200V-400V-500V/50Hz - IEC) - Pack (12/12/2018 - 16/12/2019)

((((CAPPRM:AS1210 , CAPPRM:CE , CAPPRM:MHLW , CAPPRM:MOM) + MOVOL:400V , CAPPRM:CE + COOL:AIR + MOVOL:500V) + FREQ:50HZ , ((MOVOL:380V , MOVOL:460V) + CAPPRM:ASME , CAPPRM:MHLW + MOVOL:460V) + FREQ:60HZ , CAPPRM:MHLW + COOL:AIR + MOVOL:200V) + CAPPRE:IEC , ((MOVOL:230V , MOVOL:575V) + COOL:AIR , MOVOL:460V) + CAPPRE:ULCUL + CAPPRM:ASME + FREQ:60HZ) + IDRY:N + MODEL:GA90VP_16

Ref	Part Number	Qty	Name	Validity	EL
	1088 0039 38	2	TERMINAL	**(12/12/2018 - 24/02/2019)** **(25/02/2019 - 05/12/2019)** ((((CAPPRM:AS1210 , CAPPRM:CE , CAPPRM:MHLW , CAPPRM:MOM) + MOVOL:400V , CAPPRM:CE + MOVOL:500V , CAPPRM:MHLW + MOVOL:200V) + FREQ:50HZ , ((MOVOL:200V , MOVOL:460V) + CAPPRM:MHLW , (MOVOL:380V , MOVOL:460V) + CAPPRM:ASME) + FREQ:60HZ) + CAPPRE:IEC , (MOVOL:230V , MOVOL:460V , MOVOL:575V) + CAPPRE:ULCUL + CAPPRM:ASME + FREQ:60HZ) + COOL:AIR **(06/12/2019 - 16/12/2019)** ((((CAPPRM:AS1210 , CAPPRM:CE , CAPPRM:MHLW , CAPPRM:MOM) + MOVOL:400V , CAPPRM:MHLW + MOVOL:200V) + FREQ:50HZ , ((MOVOL:200V , MOVOL:460V) + CAPPRM:MHLW , (MOVOL:380V , MOVOL:460V) + CAPPRM:ASME) + FREQ:60HZ) + CAPPRE:IEC , (MOVOL:230V , MOVOL:460V , MOVOL:575V) + CAPPRE:ULCUL + CAPPRM:ASME + FREQ:60HZ) + COOL:AIR	1X11:2,5
	1088 0039 40	1	PLATE	**(12/12/2018 - 24/02/2019)** **(25/02/2019 - 05/12/2019)** ((((CAPPRM:AS1210 , CAPPRM:CE , CAPPRM:MHLW , CAPPRM:MOM) + MOVOL:400V , CAPPRM:CE + MOVOL:500V , CAPPRM:MHLW + MOVOL:200V) + FREQ:50HZ , ((MOVOL:200V , MOVOL:460V) + CAPPRM:MHLW , (MOVOL:380V , MOVOL:460V) + CAPPRM:ASME) + FREQ:60HZ) + CAPPRE:IEC , (MOVOL:230V , MOVOL:460V , MOVOL:575V) + CAPPRE:ULCUL + CAPPRM:ASME + FREQ:60HZ) + COOL:AIR **(06/12/2019 - 16/12/2019)** ((((CAPPRM:AS1210 , CAPPRM:CE , CAPPRM:MHLW , CAPPRM:MOM) + MOVOL:400V , CAPPRM:MHLW + MOVOL:200V) + FREQ:50HZ , ((MOVOL:200V , MOVOL:460V) + CAPPRM:MHLW , (MOVOL:380V , MOVOL:460V) + CAPPRM:ASME) + FREQ:60HZ) + CAPPRE:IEC , (MOVOL:230V , MOVOL:460V , MOVOL:575V) + CAPPRE:ULCUL + CAPPRM:ASME + FREQ:60HZ) + COOL:AIR	1X11
	1088 0039 34	4	TERMINAL	**(12/12/2018 - 24/02/2019)** **(25/02/2019 - 05/12/2019)** ((((CAPPRM:AS1210 , CAPPRM:CE , CAPPRM:MHLW , CAPPRM:MOM) + MOVOL:400V , CAPPRM:CE + MOVOL:500V , CAPPRM:MHLW + MOVOL:200V) + FREQ:50HZ , ((MOVOL:200V , MOVOL:460V) + CAPPRM:MHLW , (MOVOL:380V , MOVOL:460V) + CAPPRM:ASME) + FREQ:60HZ) + CAPPRE:IEC , (MOVOL:230V , MOVOL:460V , MOVOL:575V) + CAPPRE:ULCUL + CAPPRM:ASME + FREQ:60HZ) + COOL:AIR **(06/12/2019 - 16/12/2019)** ((((CAPPRM:AS1210 , CAPPRM:CE , CAPPRM:MHLW , CAPPRM:MOM) + MOVOL:400V , CAPPRM:MHLW + MOVOL:200V) + FREQ:50HZ , ((MOVOL:200V , MOVOL:460V) + CAPPRM:MHLW , (MOVOL:380V , MOVOL:460V) + CAPPRM:ASME) + FREQ:60HZ) + CAPPRE:IEC , (MOVOL:230V , MOVOL:460V , MOVOL:575V) + CAPPRE:ULCUL + CAPPRM:ASME + FREQ:60HZ) + COOL:AIR	

Electrical legend: 1X11:30,301,34

Legend:

CAPPRE:IEC - Component approval electrical:IEC
CAPPRM:ASME - Component approval mechanical:ASME
CAPPRM:MOM - Component approval mechanical:MOM
FREQ:60HZ - Frequency:60 Hz
MOVOL:200V - Supply voltage:200 V
MOVOL:400V - Supply voltage:400 V
MOVOL:575V - Supply voltage:575 V
CAPPRE:ULCUL - Component approval electrical:UL/cUL
CAPPRM:CE - Component approval mechanical:CE
COOL:AIR - Cooling:Air cooled
IDRY:N - Integrated dryer:No
MOVOL:230V - Supply voltage:230 V
MOVOL:460V - Supply voltage:460 V
CAPPRM:AS1210 - Component approval mechanical:AS1210
CAPPRM:MHLW - Component approval mechanical:MHLW
FREQ:50HZ - Frequency:50 Hz
MODEL:GA90VP_16 - Model:GA 90VSD+
MOVOL:380V - Supply voltage:380 V
MOVOL:500V - Supply voltage:500 V

21.15 - Cubicle components GA 90 VSD+ - (200V-380V-460V/60Hz - IEC, 230V-460V-575V/60Hz - UL-cUL, 200V-400V-500V/50Hz - IEC) - Pack (12/12/2018 - 16/12/2019)

((((CAPPRM:AS1210 , CAPPRM:CE , CAPPRM:MHLW , CAPPRM:MOM) + MOVOL:400V , CAPPRM:CE + COOL:AIR + MOVOL:500V) + FREQ:50HZ , ((MOVOL:380V , MOVOL:460V) + CAPPRM:ASME , CAPPRM:MHLW + MOVOL:460V) + FREQ:60HZ , CAPPRM:MHLW + COOL:AIR + MOVOL:200V) + CAPPRE:IEC , ((MOVOL:230V , MOVOL:575V) + COOL:AIR , MOVOL:460V) + CAPPRE:ULCUL + CAPPRM:ASME + FREQ:60HZ) + IDRY:N + MODEL:GA90VP_16

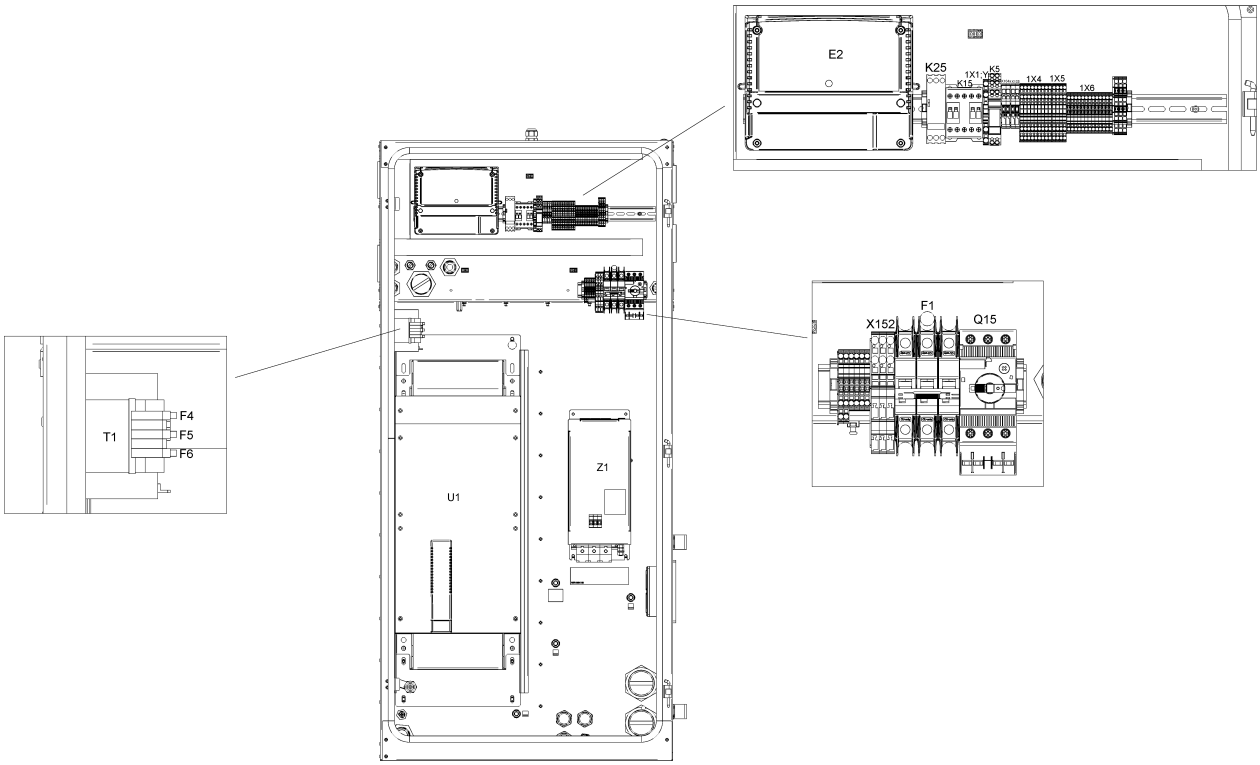

21.15 - Cubicle components GA 90 VSD+ - (200V-380V-460V/60Hz - IEC, 230V-460V-575V/60Hz - UL-cUL, 200V-400V-500V/50Hz - IEC) - Pack (12/12/2018 - 16/12/2019)

((((CAPPRM:AS1210 , CAPPRM:CE , CAPPRM:MHLW , CAPPRM:MOM) + MOVOL:400V , CAPPRM:CE + COOL:AIR + MOVOL:500V) + FREQ:50HZ , ((MOVOL:380V , MOVOL:460V) + CAPPRM:ASME , CAPPRM:MHLW + MOVOL:460V) + FREQ:60HZ , CAPPRM:MHLW + COOL:AIR + MOVOL:200V) + CAPPRE:IEC , ((MOVOL:230V , MOVOL:575V) + COOL:AIR , MOVOL:460V) + CAPPRE:ULCUL + CAPPRM:ASME + FREQ:60HZ) + IDRY:N + MODEL:GA90VP_16

Ref	Part Number	Qty	Name	Validity	EL
	1088 0039 35	1	PLATE	**(12/12/2018 - 24/02/2019)** **(25/02/2019 - 05/12/2019)** ((((CAPPRM:AS1210 , CAPPRM:CE , CAPPRM:MHLW , CAPPRM:MOM) + MOVOL:400V , CAPPRM:CE + MOVOL:500V , CAPPRM:MHLW + MOVOL:200V) + FREQ:50HZ , ((MOVOL:200V , MOVOL:460V) + CAPPRM:MHLW , (MOVOL:380V , MOVOL:460V) + CAPPRM:ASME) + FREQ:60HZ) + CAPPRE:IEC , (MOVOL:230V , MOVOL:460V , MOVOL:575V) + CAPPRE:ULCUL + CAPPRM:ASME + FREQ:60HZ) + COOL:AIR **(06/12/2019 - 16/12/2019)** ((((CAPPRM:AS1210 , CAPPRM:CE , CAPPRM:MHLW , CAPPRM:MOM) + MOVOL:400V , CAPPRM:MHLW + MOVOL:200V) + FREQ:50HZ , ((MOVOL:200V , MOVOL:460V) + CAPPRM:MHLW , (MOVOL:380V , MOVOL:460V) + CAPPRM:ASME) + FREQ:60HZ) + CAPPRE:IEC , (MOVOL:230V , MOVOL:460V , MOVOL:575V) + CAPPRE:ULCUL + CAPPRM:ASME + FREQ:60HZ) + COOL:AIR	1X11
	1088 0039 04	2	TERMINAL	**(12/12/2018 - 24/02/2019)** **(25/02/2019 - 05/12/2019)** ((((CAPPRM:AS1210 , CAPPRM:CE , CAPPRM:MHLW , CAPPRM:MOM) + MOVOL:400V , CAPPRM:CE + MOVOL:500V , CAPPRM:MHLW + MOVOL:200V) + FREQ:50HZ , ((MOVOL:200V , MOVOL:460V) + CAPPRM:MHLW , (MOVOL:380V , MOVOL:460V) + CAPPRM:ASME) + FREQ:60HZ) + CAPPRE:IEC , (MOVOL:230V , MOVOL:460V , MOVOL:575V) + CAPPRE:ULCUL + CAPPRM:ASME + FREQ:60HZ) + COOL:AIR **(06/12/2019 - 16/12/2019)** ((((CAPPRM:AS1210 , CAPPRM:CE , CAPPRM:MHLW , CAPPRM:MOM) + MOVOL:400V , CAPPRM:MHLW + MOVOL:200V) + FREQ:50HZ , ((MOVOL:200V , MOVOL:460V) + CAPPRM:MHLW , (MOVOL:380V , MOVOL:460V) + CAPPRM:ASME) + FREQ:60HZ) + CAPPRE:IEC , (MOVOL:230V , MOVOL:460V , MOVOL:575V) + CAPPRE:ULCUL + CAPPRM:ASME + FREQ:60HZ) + COOL:AIR	X104a
	1088 0037 99	2	PIN	**(12/12/2018 - 24/02/2019)** **(25/02/2019 - 05/12/2019)** ((((CAPPRM:AS1210 , CAPPRM:CE , CAPPRM:MHLW , CAPPRM:MOM) + MOVOL:400V , CAPPRM:CE + MOVOL:500V , CAPPRM:MHLW + MOVOL:200V) + FREQ:50HZ , ((MOVOL:200V , MOVOL:460V) + CAPPRM:MHLW , (MOVOL:380V , MOVOL:460V) + CAPPRM:ASME) + FREQ:60HZ) + CAPPRE:IEC , (MOVOL:230V , MOVOL:460V , MOVOL:575V) + CAPPRE:ULCUL + CAPPRM:ASME + FREQ:60HZ) + COOL:AIR **(06/12/2019 - 16/12/2019)** ((((CAPPRM:AS1210 , CAPPRM:CE , CAPPRM:MHLW , CAPPRM:MOM) + MOVOL:400V , CAPPRM:MHLW + MOVOL:200V) + FREQ:50HZ , ((MOVOL:200V , MOVOL:460V) + CAPPRM:MHLW , (MOVOL:380V , MOVOL:460V) + CAPPRM:ASME) + FREQ:60HZ) + CAPPRE:IEC , (MOVOL:230V , MOVOL:460V , MOVOL:575V) + CAPPRE:ULCUL + CAPPRM:ASME + FREQ:60HZ) + COOL:AIR	X104a/X105

Legend:

CAPPRE:IEC - Component approval electrical:IEC
CAPPRE:ULCUL - Component approval electrical:UL/cUL
CAPPRM:AS1210 - Component approval mechanical:AS1210
CAPPRM:ASME - Component approval mechanical:ASME
CAPPRM:CE - Component approval mechanical:CE
CAPPRM:MHLW - Component approval mechanical:MHLW
CAPPRM:MOM - Component approval mechanical:MOM
COOL:AIR - Cooling:Air cooled
FREQ:50HZ - Frequency:50 Hz
FREQ:60HZ - Frequency:60 Hz
IDRY:N - Integrated dryer:No
MODEL:GA90VP_16 - Model:GA 90VSD+
MOVOL:200V - Supply voltage:200 V
MOVOL:230V - Supply voltage:230 V
MOVOL:380V - Supply voltage:380 V
MOVOL:400V - Supply voltage:400 V
MOVOL:460V - Supply voltage:460 V
MOVOL:500V - Supply voltage:500 V
MOVOL:575V - Supply voltage:575 V

21.15 - Cubicle components GA 90 VSD+ - (200V-380V-460V/60Hz - IEC, 230V-460V-575V/60Hz - UL-cUL, 200V-400V-500V/50Hz - IEC) - Pack (12/12/2018 - 16/12/2019)

((((CAPPRM:AS1210 , CAPPRM:CE , CAPPRM:MHLW , CAPPRM:MOM) + MOVOL:400V , CAPPRM:CE + COOL:AIR + MOVOL:500V) + FREQ:50HZ , ((MOVOL:380V , MOVOL:460V) + CAPPRM:ASME , CAPPRM:MHLW + MOVOL:460V) + FREQ:60HZ , CAPPRM:MHLW + COOL:AIR + MOVOL:200V) + CAPPRE:IEC , ((MOVOL:230V , MOVOL:575V) + COOL:AIR , MOVOL:460V) + CAPPRE:ULCUL + CAPPRM:ASME + FREQ:60HZ) + IDRY:N + MODEL:GA90VP_16

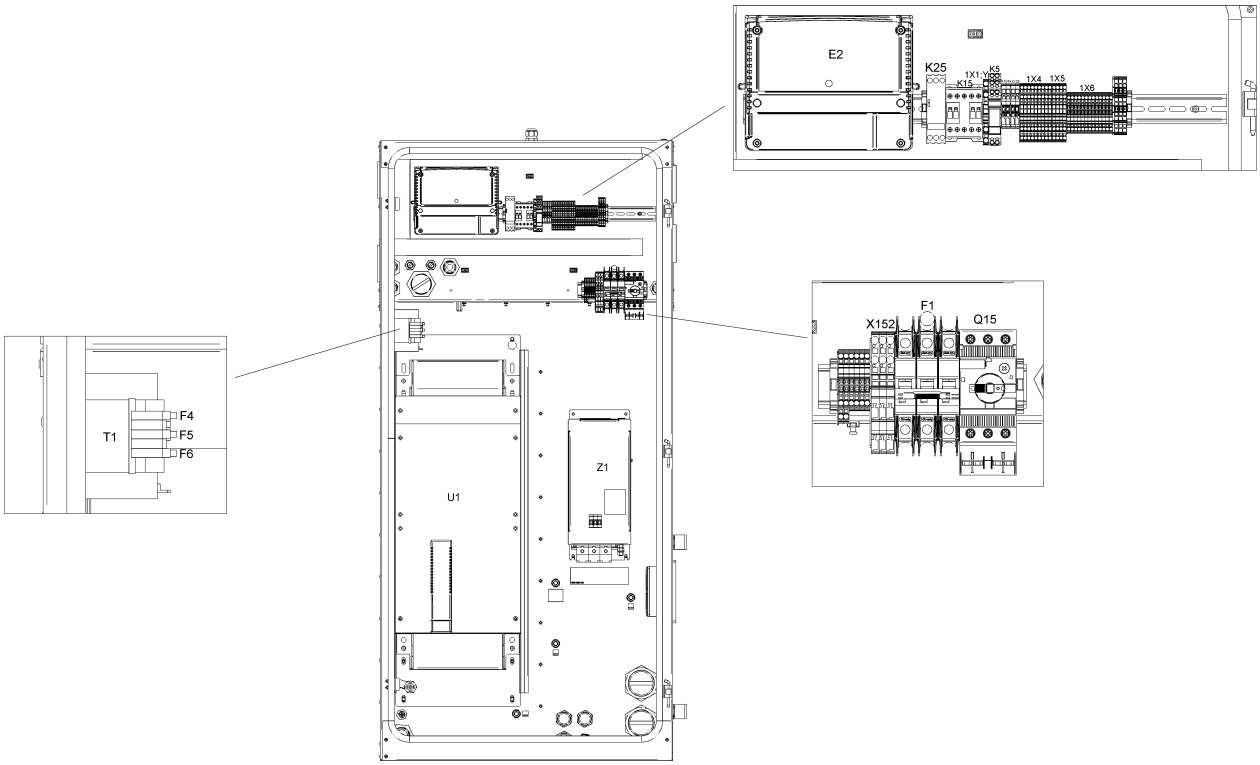

21.15 - Cubicle components GA 90 VSD+ - (200V-380V-460V/60Hz - IEC, 230V-460V-575V/60Hz - UL-cUL, 200V-400V-500V/50Hz - IEC) - Pack (12/12/2018 - 16/12/2019)

((((CAPPRM:AS1210 , CAPPRM:CE , CAPPRM:MHLW , CAPPRM:MOM) + MOVOL:400V , CAPPRM:CE + COOL:AIR + MOVOL:500V) + FREQ:50HZ , ((MOVOL:380V , MOVOL:460V) + CAPPRM:ASME , CAPPRM:MHLW + MOVOL:460V) + FREQ:60HZ , CAPPRM:MHLW + COOL:AIR + MOVOL:200V) + CAPPRE:IEC , ((MOVOL:230V , MOVOL:575V) + COOL:AIR , MOVOL:460V) + CAPPRE:ULCUL + CAPPRM:ASME + FREQ:60HZ) + IDRY:N + MODEL:GA90VP_16

Ref	Part Number	Qty	Name	Validity	EL
	1088 0039 02	1	PLATE	**(12/12/2018 - 24/02/2019)** **(25/02/2019 - 05/12/2019)** ((((CAPPRM:AS1210 , CAPPRM:CE , CAPPRM:MHLW , CAPPRM:MOM) + MOVOL:400V , CAPPRM:CE + MOVOL:500V , CAPPRM:MHLW + MOVOL:200V) + FREQ:50HZ , ((MOVOL:200V , MOVOL:460V) + CAPPRM:MHLW , (MOVOL:380V , MOVOL:460V) + CAPPRM:ASME) + FREQ:60HZ) + CAPPRE:IEC , (MOVOL:230V , MOVOL:460V , MOVOL:575V) + CAPPRE:ULCUL + CAPPRM:ASME + FREQ:60HZ) + COOL:AIR **(06/12/2019 - 16/12/2019)** ((((CAPPRM:AS1210 , CAPPRM:CE , CAPPRM:MHLW , CAPPRM:MOM) + MOVOL:400V , CAPPRM:MHLW + MOVOL:200V) + FREQ:50HZ , ((MOVOL:200V , MOVOL:460V) + CAPPRM:MHLW , (MOVOL:380V , MOVOL:460V) + CAPPRM:ASME) + FREQ:60HZ) + CAPPRE:IEC , (MOVOL:230V , MOVOL:460V , MOVOL:575V) + CAPPRE:ULCUL + CAPPRM:ASME + FREQ:60HZ) + COOL:AIR	X104a
	1088 0039 07	2	TERMINAL	**(12/12/2018 - 24/02/2019)** **(25/02/2019 - 05/12/2019)** ((((CAPPRM:AS1210 , CAPPRM:CE , CAPPRM:MHLW , CAPPRM:MOM) + MOVOL:400V , CAPPRM:CE + MOVOL:500V , CAPPRM:MHLW + MOVOL:200V) + FREQ:50HZ , ((MOVOL:200V , MOVOL:460V) + CAPPRM:MHLW , (MOVOL:380V , MOVOL:460V) + CAPPRM:ASME) + FREQ:60HZ) + CAPPRE:IEC , (MOVOL:230V , MOVOL:460V , MOVOL:575V) + CAPPRE:ULCUL + CAPPRM:ASME + FREQ:60HZ) + COOL:AIR **(06/12/2019 - 16/12/2019)** ((((CAPPRM:AS1210 , CAPPRM:CE , CAPPRM:MHLW , CAPPRM:MOM) + MOVOL:400V , CAPPRM:MHLW + MOVOL:200V) + FREQ:50HZ , ((MOVOL:200V , MOVOL:460V) + CAPPRM:MHLW , (MOVOL:380V , MOVOL:460V) + CAPPRM:ASME) + FREQ:60HZ) + CAPPRE:IEC , (MOVOL:230V , MOVOL:460V , MOVOL:575V) + CAPPRE:ULCUL + CAPPRM:ASME + FREQ:60HZ) + COOL:AIR	X105
	1088 0039 05	1	PLATE	**(12/12/2018 - 24/02/2019)** **(25/02/2019 - 05/12/2019)** ((((CAPPRM:AS1210 , CAPPRM:CE , CAPPRM:MHLW , CAPPRM:MOM) + MOVOL:400V , CAPPRM:CE + MOVOL:500V , CAPPRM:MHLW + MOVOL:200V) + FREQ:50HZ , ((MOVOL:200V , MOVOL:460V) + CAPPRM:MHLW , (MOVOL:380V , MOVOL:460V) + CAPPRM:ASME) + FREQ:60HZ) + CAPPRE:IEC , (MOVOL:230V , MOVOL:460V , MOVOL:575V) + CAPPRE:ULCUL + CAPPRM:ASME + FREQ:60HZ) + COOL:AIR **(06/12/2019 - 16/12/2019)** ((((CAPPRM:AS1210 , CAPPRM:CE , CAPPRM:MHLW , CAPPRM:MOM) + MOVOL:400V , CAPPRM:MHLW + MOVOL:200V) + FREQ:50HZ , ((MOVOL:200V , MOVOL:460V) + CAPPRM:MHLW , (MOVOL:380V , MOVOL:460V) + CAPPRM:ASME) + FREQ:60HZ) + CAPPRE:IEC , (MOVOL:230V , MOVOL:460V , MOVOL:575V) + CAPPRE:ULCUL + CAPPRM:ASME + FREQ:60HZ) + COOL:AIR	X105

Legend:

CAPPRE:IEC - Component approval electrical:IEC
CAPPRE:ULCUL - Component approval electrical:UL/cUL
CAPPRM:AS1210 - Component approval mechanical:AS1210
CAPPRM:ASME - Component approval mechanical:ASME
CAPPRM:CE - Component approval mechanical:CE
CAPPRM:MHLW - Component approval mechanical:MHLW
CAPPRM:MOM - Component approval mechanical:MOM
COOL:AIR - Cooling:Air cooled
FREQ:50HZ - Frequency:50 Hz
FREQ:60HZ - Frequency:60 Hz
IDRY:N - Integrated dryer:No
MODEL:GA90VP_16 - Model:GA 90VSD+
MOVOL:200V - Supply voltage:200 V
MOVOL:230V - Supply voltage:230 V
MOVOL:380V - Supply voltage:380 V
MOVOL:400V - Supply voltage:400 V
MOVOL:460V - Supply voltage:460 V
MOVOL:500V - Supply voltage:500 V
MOVOL:575V - Supply voltage:575 V

21.15 - Cubicle components GA 90 VSD+ - (200V-380V-460V/60Hz - IEC, 230V-460V-575V/60Hz - UL-cUL, 200V-400V-500V/50Hz - IEC) - Pack (12/12/2018 - 16/12/2019)

((((CAPPRM:AS1210 , CAPPRM:CE , CAPPRM:MHLW , CAPPRM:MOM) + MOVOL:400V , CAPPRM:CE + COOL:AIR + MOVOL:500V) + FREQ:50HZ , ((MOVOL:380V , MOVOL:460V) + CAPPRM:ASME , CAPPRM:MHLW + MOVOL:460V) + FREQ:60HZ , CAPPRM:MHLW + COOL:AIR + MOVOL:200V) + CAPPRE:IEC , ((MOVOL:230V , MOVOL:575V) + COOL:AIR , MOVOL:460V) + CAPPRE:ULCUL + CAPPRM:ASME + FREQ:60HZ) + IDRY:N + MODEL:GA90VP_16

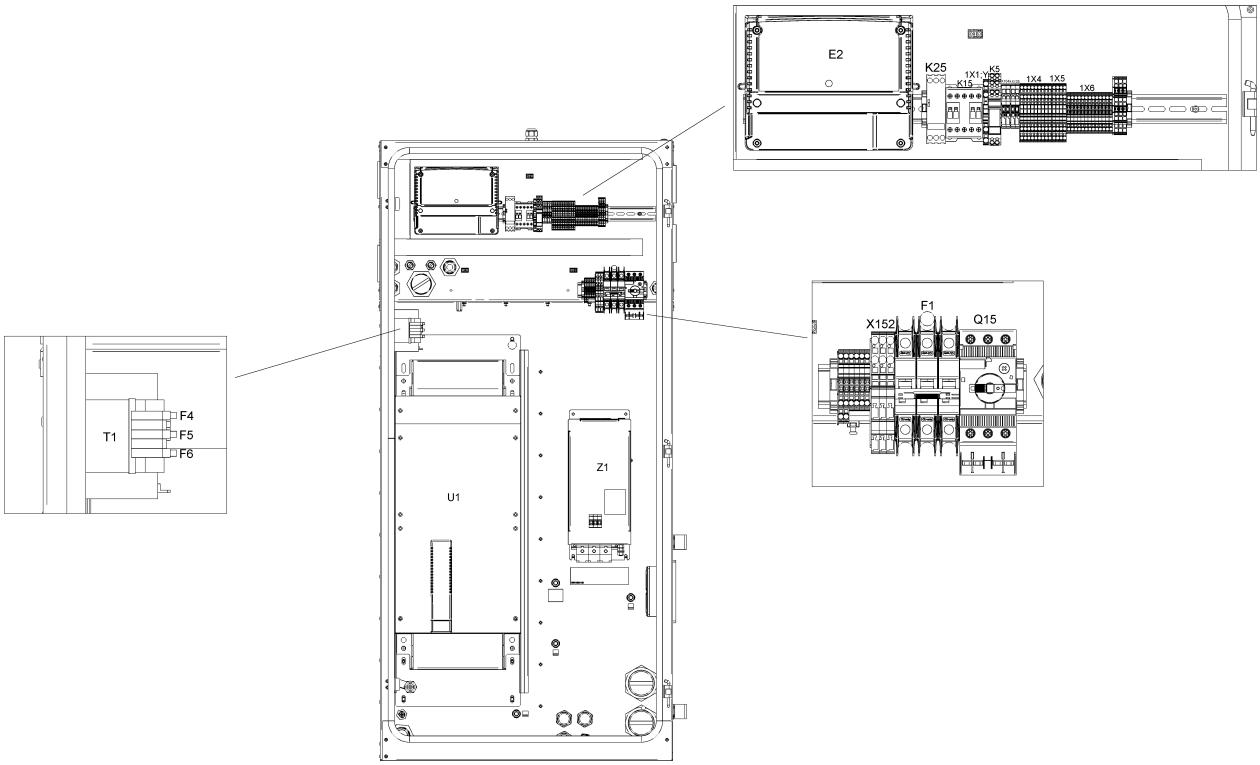

21.15 - Cubicle components GA 90 VSD+ - (200V-380V-460V/60Hz - IEC, 230V-460V-575V/60Hz - UL-cUL, 200V-400V-500V/50Hz - IEC) - Pack (12/12/2018 - 16/12/2019)

((((CAPPRM:AS1210 , CAPPRM:CE , CAPPRM:MHLW , CAPPRM:MOM) + MOVOL:400V , CAPPRM:CE + COOL:AIR + MOVOL:500V) + FREQ:50HZ , ((MOVOL:380V , MOVOL:460V) + CAPPRM:ASME , CAPPRM:MHLW + MOVOL:460V) + FREQ:60HZ , CAPPRM:MHLW + COOL:AIR + MOVOL:200V) + CAPPRE:IEC , ((MOVOL:230V , MOVOL:575V) + COOL:AIR , MOVOL:460V) + CAPPRE:ULCUL + CAPPRM:ASME + FREQ:60HZ) + IDRY:N + MODEL:GA90VP_16

Ref	Part Number	Qty	Name	Validity	EL
	1088 0039 34	13	TERMINAL	**(12/12/2018 - 24/02/2019)** **(25/02/2019 - 05/12/2019)** ((((CAPPRM:AS1210 , CAPPRM:CE , CAPPRM:MHLW , CAPPRM:MOM) + MOVOL:400V , CAPPRM:CE + MOVOL:500V , CAPPRM:MHLW + MOVOL:200V) + FREQ:50HZ , ((MOVOL:200V , MOVOL:460V) + CAPPRM:MHLW , (MOVOL:380V , MOVOL:460V) + CAPPRM:ASME) + FREQ:60HZ) + CAPPRE:IEC , (MOVOL:230V , MOVOL:460V , MOVOL:575V) + CAPPRE:ULCUL + CAPPRM:ASME + FREQ:60HZ) + COOL:AIR **(06/12/2019 - 16/12/2019)** ((((CAPPRM:AS1210 , CAPPRM:CE , CAPPRM:MHLW , CAPPRM:MOM) + MOVOL:400V , CAPPRM:MHLW + MOVOL:200V) + FREQ:50HZ , ((MOVOL:200V , MOVOL:460V) + CAPPRM:MHLW , (MOVOL:380V , MOVOL:460V) + CAPPRM:ASME) + FREQ:60HZ) + CAPPRE:IEC , (MOVOL:230V , MOVOL:460V , MOVOL:575V) + CAPPRE:ULCUL + CAPPRM:ASME + FREQ:60HZ) + COOL:AIR	1X6
	1088 0037 69	3	CONNECTOR	**(12/12/2018 - 24/02/2019)** **(25/02/2019 - 05/12/2019)** ((((CAPPRM:AS1210 , CAPPRM:CE , CAPPRM:MHLW , CAPPRM:MOM) + MOVOL:400V , CAPPRM:CE + MOVOL:500V , CAPPRM:MHLW + MOVOL:200V) + FREQ:50HZ , ((MOVOL:200V , MOVOL:460V) + CAPPRM:MHLW , (MOVOL:380V , MOVOL:460V) + CAPPRM:ASME) + FREQ:60HZ) + CAPPRE:IEC , (MOVOL:230V , MOVOL:460V , MOVOL:575V) + CAPPRE:ULCUL + CAPPRM:ASME + FREQ:60HZ) + COOL:AIR **(06/12/2019 - 16/12/2019)** ((((CAPPRM:AS1210 , CAPPRM:CE , CAPPRM:MHLW , CAPPRM:MOM) + MOVOL:400V , CAPPRM:MHLW + MOVOL:200V) + FREQ:50HZ , ((MOVOL:200V , MOVOL:460V) + CAPPRM:MHLW , (MOVOL:380V , MOVOL:460V) + CAPPRM:ASME) + FREQ:60HZ) + CAPPRE:IEC , (MOVOL:230V , MOVOL:460V , MOVOL:575V) + CAPPRE:ULCUL + CAPPRM:ASME + FREQ:60HZ) + COOL:AIR	1X7
	1088 0039 35	1	PLATE	**(12/12/2018 - 24/02/2019)** **(25/02/2019 - 05/12/2019)** ((((CAPPRM:AS1210 , CAPPRM:CE , CAPPRM:MHLW , CAPPRM:MOM) + MOVOL:400V , CAPPRM:CE + MOVOL:500V , CAPPRM:MHLW + MOVOL:200V) + FREQ:50HZ , ((MOVOL:200V , MOVOL:460V) + CAPPRM:MHLW , (MOVOL:380V , MOVOL:460V) + CAPPRM:ASME) + FREQ:60HZ) + CAPPRE:IEC , (MOVOL:230V , MOVOL:460V , MOVOL:575V) + CAPPRE:ULCUL + CAPPRM:ASME + FREQ:60HZ) + COOL:AIR **(06/12/2019 - 16/12/2019)** ((((CAPPRM:AS1210 , CAPPRM:CE , CAPPRM:MHLW , CAPPRM:MOM) + MOVOL:400V , CAPPRM:MHLW + MOVOL:200V) + FREQ:50HZ , ((MOVOL:200V , MOVOL:460V) + CAPPRM:MHLW , (MOVOL:380V , MOVOL:460V) + CAPPRM:ASME) + FREQ:60HZ) + CAPPRE:IEC , (MOVOL:230V , MOVOL:460V , MOVOL:575V) + CAPPRE:ULCUL + CAPPRM:ASME + FREQ:60HZ) + COOL:AIR	1X6

Legend:

CAPPRE:IEC - Component approval electrical:IEC
CAPPRE:ULCUL - Component approval electrical:UL/cUL
CAPPRM:AS1210 - Component approval mechanical:AS1210
CAPPRM:ASME - Component approval mechanical:ASME
CAPPRM:CE - Component approval mechanical:CE
CAPPRM:MHLW - Component approval mechanical:MHLW
CAPPRM:MOM - Component approval mechanical:MOM
COOL:AIR - Cooling:Air cooled
FREQ:50HZ - Frequency:50 Hz
FREQ:60HZ - Frequency:60 Hz
IDRY:N - Integrated dryer:No
MODEL:GA90VP_16 - Model:GA 90VSD+
MOVOL:200V - Supply voltage:200 V
MOVOL:230V - Supply voltage:230 V
MOVOL:380V - Supply voltage:380 V
MOVOL:400V - Supply voltage:400 V
MOVOL:460V - Supply voltage:460 V
MOVOL:500V - Supply voltage:500 V
MOVOL:575V - Supply voltage:575 V

21.15 - Cubicle components GA 90 VSD+ - (200V-380V-460V/60Hz - IEC, 230V-460V-575V/60Hz - UL-cUL, 200V-400V-500V/50Hz - IEC) - Pack (12/12/2018 - 16/12/2019)

((((CAPPRM:AS1210 , CAPPRM:CE , CAPPRM:MHLW , CAPPRM:MOM) + MOVOL:400V , CAPPRM:CE + COOL:AIR + MOVOL:500V) + FREQ:50HZ , ((MOVOL:380V , MOVOL:460V) + CAPPRM:ASME , CAPPRM:MHLW + MOVOL:460V) + FREQ:60HZ , CAPPRM:MHLW + COOL:AIR + MOVOL:200V) + CAPPRE:IEC , ((MOVOL:230V , MOVOL:575V) + COOL:AIR , MOVOL:460V) + CAPPRE:ULCUL + CAPPRM:ASME + FREQ:60HZ) + IDRY:N + MODEL:GA90VP_16

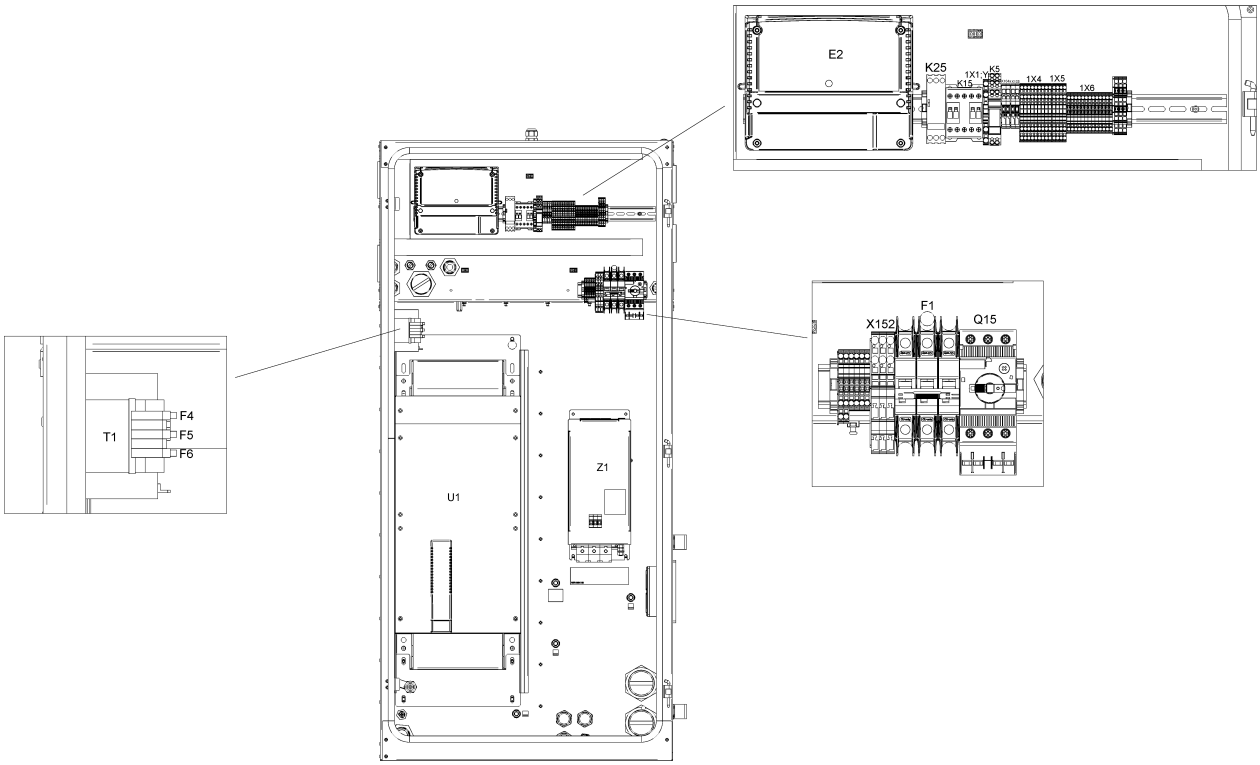

21.15 - Cubicle components GA 90 VSD+ - (200V-380V-460V/60Hz - IEC, 230V-460V-575V/60Hz - UL-cUL, 200V-400V-500V/50Hz - IEC) - Pack (12/12/2018 - 16/12/2019)

((((CAPPRM:AS1210 , CAPPRM:CE , CAPPRM:MHLW , CAPPRM:MOM) + MOVOL:400V , CAPPRM:CE + COOL:AIR + MOVOL:500V) + FREQ:50HZ , ((MOVOL:380V , MOVOL:460V) + CAPPRM:ASME , CAPPRM:MHLW + MOVOL:460V) + FREQ:60HZ , CAPPRM:MHLW + COOL:AIR + MOVOL:200V) + CAPPRE:IEC , ((MOVOL:230V , MOVOL:575V) + COOL:AIR , MOVOL:460V) + CAPPRE:ULCUL + CAPPRM:ASME + FREQ:60HZ) + IDRY:N + MODEL:GA90VP_16

Ref	Part Number	Qty	Name	Validity	EL
	1088 0040 37	1	END PLATE	**(12/12/2018 - 24/02/2019)** **(25/02/2019 - 05/12/2019)** ((((CAPPRM:AS1210 , CAPPRM:CE , CAPPRM:MHLW , CAPPRM:MOM) + MOVOL:400V , CAPPRM:CE + MOVOL:500V , CAPPRM:MHLW + MOVOL:200V) + FREQ:50HZ , ((MOVOL:200V , MOVOL:460V) + CAPPRM:MHLW , (MOVOL:380V , MOVOL:460V) + CAPPRM:ASME) + FREQ:60HZ) + CAPPRE:IEC , (MOVOL:230V , MOVOL:460V , MOVOL:575V) + CAPPRE:ULCUL + CAPPRM:ASME + FREQ:60HZ) + COOL:AIR **(06/12/2019 - 16/12/2019)** ((((CAPPRM:AS1210 , CAPPRM:CE , CAPPRM:MHLW , CAPPRM:MOM) + MOVOL:400V , CAPPRM:MHLW + MOVOL:200V) + FREQ:50HZ , ((MOVOL:200V , MOVOL:460V) + CAPPRM:MHLW , (MOVOL:380V , MOVOL:460V) + CAPPRM:ASME) + FREQ:60HZ) + CAPPRE:IEC , (MOVOL:230V , MOVOL:460V , MOVOL:575V) + CAPPRE:ULCUL + CAPPRM:ASME + FREQ:60HZ) + COOL:AIR	1X7
	1088 0039 36	9	TERMINAL	**(12/12/2018 - 24/02/2019)** **(25/02/2019 - 05/12/2019)** ((((CAPPRM:AS1210 , CAPPRM:CE , CAPPRM:MHLW , CAPPRM:MOM) + MOVOL:400V , CAPPRM:CE + MOVOL:500V , CAPPRM:MHLW + MOVOL:200V) + FREQ:50HZ , ((MOVOL:200V , MOVOL:460V) + CAPPRM:MHLW , (MOVOL:380V , MOVOL:460V) + CAPPRM:ASME) + FREQ:60HZ) + CAPPRE:IEC , (MOVOL:230V , MOVOL:460V , MOVOL:575V) + CAPPRE:ULCUL + CAPPRM:ASME + FREQ:60HZ) + COOL:AIR **(06/12/2019 - 16/12/2019)** ((((CAPPRM:AS1210 , CAPPRM:CE , CAPPRM:MHLW , CAPPRM:MOM) + MOVOL:400V , CAPPRM:MHLW + MOVOL:200V) + FREQ:50HZ , ((MOVOL:200V , MOVOL:460V) + CAPPRM:MHLW , (MOVOL:380V , MOVOL:460V) + CAPPRM:ASME) + FREQ:60HZ) + CAPPRE:IEC , (MOVOL:230V , MOVOL:460V , MOVOL:575V) + CAPPRE:ULCUL + CAPPRM:ASME + FREQ:60HZ) + COOL:AIR	1X4
	1088 0039 36	4	TERMINAL	**(12/12/2018 - 24/02/2019)** **(25/02/2019 - 05/12/2019)** ((((CAPPRM:AS1210 , CAPPRM:CE , CAPPRM:MHLW , CAPPRM:MOM) + MOVOL:400V , CAPPRM:CE + MOVOL:500V , CAPPRM:MHLW + MOVOL:200V) + FREQ:50HZ , ((MOVOL:200V , MOVOL:460V) + CAPPRM:MHLW , (MOVOL:380V , MOVOL:460V) + CAPPRM:ASME) + FREQ:60HZ) + CAPPRE:IEC , (MOVOL:230V , MOVOL:460V , MOVOL:575V) + CAPPRE:ULCUL + CAPPRM:ASME + FREQ:60HZ) + COOL:AIR **(06/12/2019 - 16/12/2019)** ((((CAPPRM:AS1210 , CAPPRM:CE , CAPPRM:MHLW , CAPPRM:MOM) + MOVOL:400V , CAPPRM:MHLW + MOVOL:200V) + FREQ:50HZ , ((MOVOL:200V , MOVOL:460V) + CAPPRM:MHLW , (MOVOL:380V , MOVOL:460V) + CAPPRM:ASME) + FREQ:60HZ) + CAPPRE:IEC , (MOVOL:230V , MOVOL:460V , MOVOL:575V) + CAPPRE:ULCUL + CAPPRM:ASME + FREQ:60HZ) + COOL:AIR	1X6

Legend:

CAPPRE:IEC - Component approval electrical:IEC
CAPPRE:ULCUL - Component approval electrical:UL/cUL
CAPPRM:AS1210 - Component approval mechanical:AS1210
CAPPRM:ASME - Component approval mechanical:ASME
CAPPRM:CE - Component approval mechanical:CE
CAPPRM:MHLW - Component approval mechanical:MHLW
CAPPRM:MOM - Component approval mechanical:MOM
COOL:AIR - Cooling:Air cooled
FREQ:50HZ - Frequency:50 Hz
FREQ:60HZ - Frequency:60 Hz
IDRY:N - Integrated dryer:No
MODEL:GA90VP_16 - Model:GA 90VSD+
MOVOL:200V - Supply voltage:200 V
MOVOL:230V - Supply voltage:230 V
MOVOL:380V - Supply voltage:380 V
MOVOL:400V - Supply voltage:400 V
MOVOL:460V - Supply voltage:460 V
MOVOL:500V - Supply voltage:500 V
MOVOL:575V - Supply voltage:575 V

21.15 - Cubicle components GA 90 VSD+ - (200V-380V-460V/60Hz - IEC, 230V-460V-575V/60Hz - UL-cUL, 200V-400V-500V/50Hz - IEC) - Pack (12/12/2018 - 16/12/2019)

((((CAPPRM:AS1210 , CAPPRM:CE , CAPPRM:MHLW , CAPPRM:MOM) + MOVOL:400V , CAPPRM:CE + COOL:AIR + MOVOL:500V) + FREQ:50HZ , ((MOVOL:380V , MOVOL:460V) + CAPPRM:ASME , CAPPRM:MHLW + MOVOL:460V) + FREQ:60HZ , CAPPRM:MHLW + COOL:AIR + MOVOL:200V) + CAPPRE:IEC , ((MOVOL:230V , MOVOL:575V) + COOL:AIR , MOVOL:460V) + CAPPRE:ULCUL + CAPPRM:ASME + FREQ:60HZ) + IDRY:N + MODEL:GA90VP_16

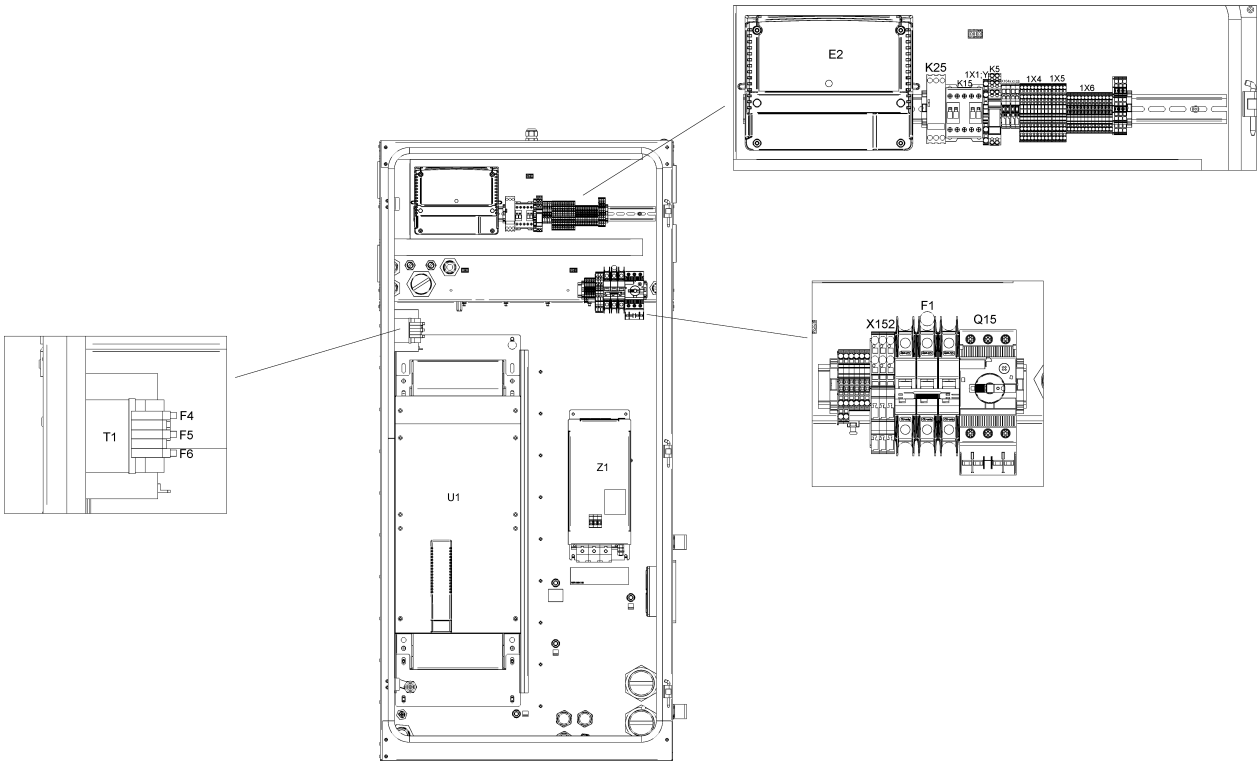

21.15 - Cubicle components GA 90 VSD+ - (200V-380V-460V/60Hz - IEC, 230V-460V-575V/60Hz - UL-cUL, 200V-400V-500V/50Hz - IEC) - Pack (12/12/2018 - 16/12/2019)

((((CAPPRM:AS1210 , CAPPRM:CE , CAPPRM:MHLW , CAPPRM:MOM) + MOVOL:400V , CAPPRM:CE + COOL:AIR + MOVOL:500V) + FREQ:50HZ , ((MOVOL:380V , MOVOL:460V) + CAPPRM:ASME , CAPPRM:MHLW + MOVOL:460V) + FREQ:60HZ , CAPPRM:MHLW + COOL:AIR + MOVOL:200V) + CAPPRE:IEC , ((MOVOL:230V , MOVOL:575V) + COOL:AIR , MOVOL:460V) + CAPPRE:ULCUL + CAPPRM:ASME + FREQ:60HZ) + IDRY:N + MODEL:GA90VP_16

Ref	Part Number	Qty	Name	Validity	EL
	1088 0039 37	1	END PLATE	**(12/12/2018 - 24/02/2019)** **(25/02/2019 - 05/12/2019)** ((((CAPPRM:AS1210 , CAPPRM:CE , CAPPRM:MHLW , CAPPRM:MOM) + MOVOL:400V , CAPPRM:CE + MOVOL:500V , CAPPRM:MHLW + MOVOL:200V) + FREQ:50HZ , ((MOVOL:200V , MOVOL:460V) + CAPPRM:MHLW , (MOVOL:380V , MOVOL:460V) + CAPPRM:ASME) + FREQ:60HZ) + CAPPRE:IEC , (MOVOL:230V , MOVOL:460V , MOVOL:575V) + CAPPRE:ULCUL + CAPPRM:ASME + FREQ:60HZ) + COOL:AIR **(06/12/2019 - 16/12/2019)** ((((CAPPRM:AS1210 , CAPPRM:CE , CAPPRM:MHLW , CAPPRM:MOM) + MOVOL:400V , CAPPRM:MHLW + MOVOL:200V) + FREQ:50HZ , ((MOVOL:200V , MOVOL:460V) + CAPPRM:MHLW , (MOVOL:380V , MOVOL:460V) + CAPPRM:ASME) + FREQ:60HZ) + CAPPRE:IEC , (MOVOL:230V , MOVOL:460V , MOVOL:575V) + CAPPRE:ULCUL + CAPPRM:ASME + FREQ:60HZ) + COOL:AIR	1X4
	1088 0039 37	1	END PLATE	**(12/12/2018 - 24/02/2019)** **(25/02/2019 - 05/12/2019)** ((((CAPPRM:AS1210 , CAPPRM:CE , CAPPRM:MHLW , CAPPRM:MOM) + MOVOL:400V , CAPPRM:CE + MOVOL:500V , CAPPRM:MHLW + MOVOL:200V) + FREQ:50HZ , ((MOVOL:200V , MOVOL:460V) + CAPPRM:MHLW , (MOVOL:380V , MOVOL:460V) + CAPPRM:ASME) + FREQ:60HZ) + CAPPRE:IEC , (MOVOL:230V , MOVOL:460V , MOVOL:575V) + CAPPRE:ULCUL + CAPPRM:ASME + FREQ:60HZ) + COOL:AIR **(06/12/2019 - 16/12/2019)** ((((CAPPRM:AS1210 , CAPPRM:CE , CAPPRM:MHLW , CAPPRM:MOM) + MOVOL:400V , CAPPRM:MHLW + MOVOL:200V) + FREQ:50HZ , ((MOVOL:200V , MOVOL:460V) + CAPPRM:MHLW , (MOVOL:380V , MOVOL:460V) + CAPPRM:ASME) + FREQ:60HZ) + CAPPRE:IEC , (MOVOL:230V , MOVOL:460V , MOVOL:575V) + CAPPRE:ULCUL + CAPPRM:ASME + FREQ:60HZ) + COOL:AIR	1X6
	1088 0039 37	1	END PLATE	**(12/12/2018 - 24/02/2019)** **(25/02/2019 - 05/12/2019)** ((((CAPPRM:AS1210 , CAPPRM:CE , CAPPRM:MHLW , CAPPRM:MOM) + MOVOL:400V , CAPPRM:CE + MOVOL:500V , CAPPRM:MHLW + MOVOL:200V) + FREQ:50HZ , ((MOVOL:200V , MOVOL:460V) + CAPPRM:MHLW , (MOVOL:380V , MOVOL:460V) + CAPPRM:ASME) + FREQ:60HZ) + CAPPRE:IEC , (MOVOL:230V , MOVOL:460V , MOVOL:575V) + CAPPRE:ULCUL + CAPPRM:ASME + FREQ:60HZ) + COOL:AIR **(06/12/2019 - 16/12/2019)** ((((CAPPRM:AS1210 , CAPPRM:CE , CAPPRM:MHLW , CAPPRM:MOM) + MOVOL:400V , CAPPRM:MHLW + MOVOL:200V) + FREQ:50HZ , ((MOVOL:200V , MOVOL:460V) + CAPPRM:MHLW , (MOVOL:380V , MOVOL:460V) + CAPPRM:ASME) + FREQ:60HZ) + CAPPRE:IEC , (MOVOL:230V , MOVOL:460V , MOVOL:575V) + CAPPRE:ULCUL + CAPPRM:ASME + FREQ:60HZ) + COOL:AIR	1X1:Y/D

Legend:

CAPPRE:IEC - Component approval electrical:IEC
CAPPRE:ULCUL - Component approval electrical:UL/cUL
CAPPRM:AS1210 - Component approval mechanical:AS1210
CAPPRM:ASME - Component approval mechanical:ASME
CAPPRM:CE - Component approval mechanical:CE
CAPPRM:MHLW - Component approval mechanical:MHLW
CAPPRM:MOM - Component approval mechanical:MOM
COOL:AIR - Cooling:Air cooled
FREQ:50HZ - Frequency:50 Hz
FREQ:60HZ - Frequency:60 Hz
IDRY:N - Integrated dryer:No
MODEL:GA90VP_16 - Model:GA 90VSD+
MOVOL:200V - Supply voltage:200 V
MOVOL:230V - Supply voltage:230 V
MOVOL:380V - Supply voltage:380 V
MOVOL:400V - Supply voltage:400 V
MOVOL:460V - Supply voltage:460 V
MOVOL:500V - Supply voltage:500 V
MOVOL:575V - Supply voltage:575 V

21.15 - Cubicle components GA 90 VSD+ - (200V-380V-460V/60Hz - IEC, 230V-460V-575V/60Hz - UL-cUL, 200V-400V-500V/50Hz - IEC) - Pack (12/12/2018 - 16/12/2019)

((((CAPPRM:AS1210 , CAPPRM:CE , CAPPRM:MHLW , CAPPRM:MOM) + MOVOL:400V , CAPPRM:CE + COOL:AIR + MOVOL:500V) + FREQ:50HZ , ((MOVOL:380V , MOVOL:460V) + CAPPRM:ASME , CAPPRM:MHLW + MOVOL:460V) + FREQ:60HZ , CAPPRM:MHLW + COOL:AIR + MOVOL:200V) + CAPPRE:IEC , ((MOVOL:230V , MOVOL:575V) + COOL:AIR , MOVOL:460V) + CAPPRE:ULCUL + CAPPRM:ASME + FREQ:60HZ) + IDRY:N + MODEL:GA90VP_16

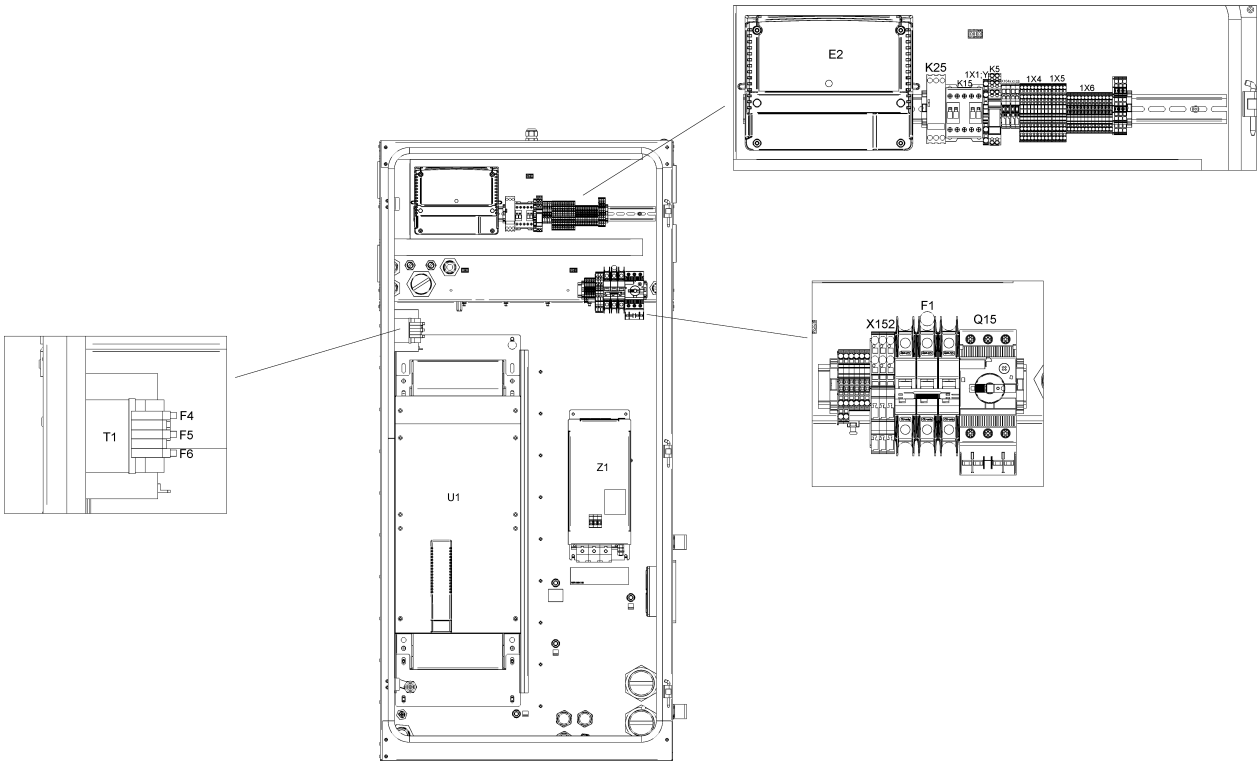

21.15 - Cubicle components GA 90 VSD+ - (200V-380V-460V/60Hz - IEC, 230V-460V-575V/60Hz - UL-cUL, 200V-400V-500V/50Hz - IEC) - Pack (12/12/2018 - 16/12/2019)

((((CAPPRM:AS1210 , CAPPRM:CE , CAPPRM:MHLW , CAPPRM:MOM) + MOVOL:400V , CAPPRM:CE + COOL:AIR + MOVOL:500V) + FREQ:50HZ , ((MOVOL:380V , MOVOL:460V) + CAPPRM:ASME , CAPPRM:MHLW + MOVOL:460V) + FREQ:60HZ , CAPPRM:MHLW + COOL:AIR + MOVOL:200V) + CAPPRE:IEC , ((MOVOL:230V , MOVOL:575V) + COOL:AIR , MOVOL:460V) + CAPPRE:ULCUL + CAPPRM:ASME + FREQ:60HZ) + IDRY:N + MODEL:GA90VP_16

Ref	Part Number	Qty	Name	Validity	EL
	1088 0037 81	1	CONNECTOR	**(12/12/2018 - 24/02/2019)** **(25/02/2019 - 05/12/2019)** ((((CAPPRM:AS1210 , CAPPRM:CE , CAPPRM:MHLW , CAPPRM:MOM) + MOVOL:400V , CAPPRM:CE + MOVOL:500V , CAPPRM:MHLW + MOVOL:200V) + FREQ:50HZ , ((MOVOL:200V , MOVOL:460V) + CAPPRM:MHLW , (MOVOL:380V , MOVOL:460V) + CAPPRM:ASME) + FREQ:60HZ) + CAPPRE:IEC , (MOVOL:230V , MOVOL:460V , MOVOL:575V) + CAPPRE:ULCUL + CAPPRM:ASME + FREQ:60HZ) + COOL:AIR **(06/12/2019 - 16/12/2019)** ((((CAPPRM:AS1210 , CAPPRM:CE , CAPPRM:MHLW , CAPPRM:MOM) + MOVOL:400V , CAPPRM:MHLW + MOVOL:200V) + FREQ:50HZ , ((MOVOL:200V , MOVOL:460V) + CAPPRM:MHLW , (MOVOL:380V , MOVOL:460V) + CAPPRM:ASME) + FREQ:60HZ) + CAPPRE:IEC , (MOVOL:230V , MOVOL:460V , MOVOL:575V) + CAPPRE:ULCUL + CAPPRM:ASME + FREQ:60HZ) + COOL:AIR	2X27
	1088 0037 80	1	CONNECTOR	**(12/12/2018 - 24/02/2019)** **(25/02/2019 - 05/12/2019)** ((((CAPPRM:AS1210 , CAPPRM:CE , CAPPRM:MHLW , CAPPRM:MOM) + MOVOL:400V , CAPPRM:CE + MOVOL:500V , CAPPRM:MHLW + MOVOL:200V) + FREQ:50HZ , ((MOVOL:200V , MOVOL:460V) + CAPPRM:MHLW , (MOVOL:380V , MOVOL:460V) + CAPPRM:ASME) + FREQ:60HZ) + CAPPRE:IEC , (MOVOL:230V , MOVOL:460V , MOVOL:575V) + CAPPRE:ULCUL + CAPPRM:ASME + FREQ:60HZ) + COOL:AIR **(06/12/2019 - 16/12/2019)** ((((CAPPRM:AS1210 , CAPPRM:CE , CAPPRM:MHLW , CAPPRM:MOM) + MOVOL:400V , CAPPRM:MHLW + MOVOL:200V) + FREQ:50HZ , ((MOVOL:200V , MOVOL:460V) + CAPPRM:MHLW , (MOVOL:380V , MOVOL:460V) + CAPPRM:ASME) + FREQ:60HZ) + CAPPRE:IEC , (MOVOL:230V , MOVOL:460V , MOVOL:575V) + CAPPRE:ULCUL + CAPPRM:ASME + FREQ:60HZ) + COOL:AIR	2X28
	1088 0031 32	1	CONNECTOR	**(12/12/2018 - 24/02/2019)** **(25/02/2019 - 05/12/2019)** ((((CAPPRM:AS1210 , CAPPRM:CE , CAPPRM:MHLW , CAPPRM:MOM) + MOVOL:400V , CAPPRM:CE + MOVOL:500V , CAPPRM:MHLW + MOVOL:200V) + FREQ:50HZ , ((MOVOL:200V , MOVOL:460V) + CAPPRM:MHLW , (MOVOL:380V , MOVOL:460V) + CAPPRM:ASME) + FREQ:60HZ) + CAPPRE:IEC , (MOVOL:230V , MOVOL:460V , MOVOL:575V) + CAPPRE:ULCUL + CAPPRM:ASME + FREQ:60HZ) + COOL:AIR **(06/12/2019 - 16/12/2019)** ((((CAPPRM:AS1210 , CAPPRM:CE , CAPPRM:MHLW , CAPPRM:MOM) + MOVOL:400V , CAPPRM:MHLW + MOVOL:200V) + FREQ:50HZ , ((MOVOL:200V , MOVOL:460V) + CAPPRM:MHLW , (MOVOL:380V , MOVOL:460V) + CAPPRM:ASME) + FREQ:60HZ) + CAPPRE:IEC , (MOVOL:230V , MOVOL:460V , MOVOL:575V) + CAPPRE:ULCUL + CAPPRM:ASME + FREQ:60HZ) + COOL:AIR	2X30

Legend:

CAPPRE:IEC - Component approval electrical:IEC
CAPPRE:ULCUL - Component approval electrical:UL/cUL
CAPPRM:AS1210 - Component approval mechanical:AS1210
CAPPRM:ASME - Component approval mechanical:ASME
CAPPRM:CE - Component approval mechanical:CE
CAPPRM:MHLW - Component approval mechanical:MHLW
CAPPRM:MOM - Component approval mechanical:MOM
COOL:AIR - Cooling:Air cooled
FREQ:50HZ - Frequency:50 Hz
FREQ:60HZ - Frequency:60 Hz
IDRY:N - Integrated dryer:No
MODEL:GA90VP_16 - Model:GA 90VSD+
MOVOL:200V - Supply voltage:200 V
MOVOL:230V - Supply voltage:230 V
MOVOL:380V - Supply voltage:380 V
MOVOL:400V - Supply voltage:400 V
MOVOL:460V - Supply voltage:460 V
MOVOL:500V - Supply voltage:500 V
MOVOL:575V - Supply voltage:575 V

21.15 - Cubicle components GA 90 VSD+ - (200V-380V-460V/60Hz - IEC, 230V-460V-575V/60Hz - UL-cUL, 200V-400V-500V/50Hz - IEC) - Pack (12/12/2018 - 16/12/2019)

((((CAPPRM:AS1210 , CAPPRM:CE , CAPPRM:MHLW , CAPPRM:MOM) + MOVOL:400V , CAPPRM:CE + COOL:AIR + MOVOL:500V) + FREQ:50HZ , ((MOVOL:380V , MOVOL:460V) + CAPPRM:ASME , CAPPRM:MHLW + MOVOL:460V) + FREQ:60HZ , CAPPRM:MHLW + COOL:AIR + MOVOL:200V) + CAPPRE:IEC , ((MOVOL:230V , MOVOL:575V) + COOL:AIR , MOVOL:460V) + CAPPRE:ULCUL + CAPPRM:ASME + FREQ:60HZ) + IDRY:N + MODEL:GA90VP_16

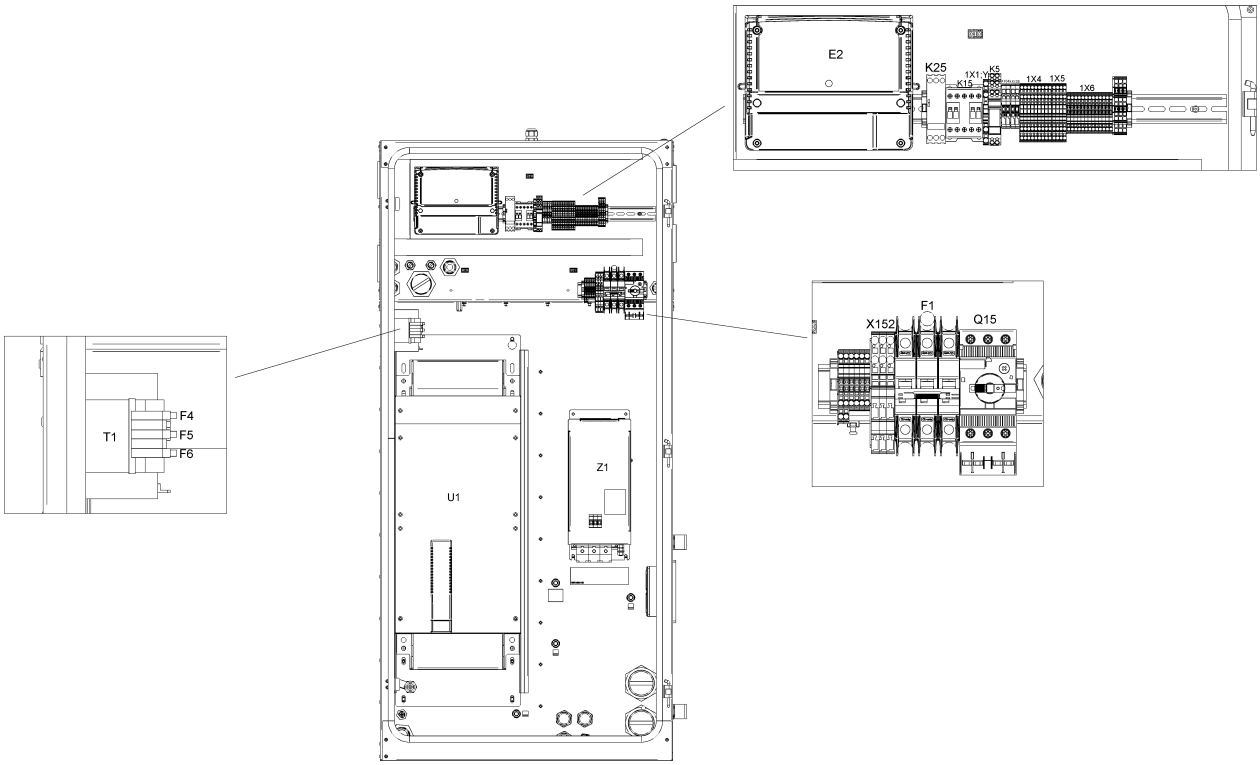

21.15 - Cubicle components GA 90 VSD+ - (200V-380V-460V/60Hz - IEC, 230V-460V-575V/60Hz - UL-cUL, 200V-400V-500V/50Hz - IEC) - Pack (12/12/2018 - 16/12/2019)

((((CAPPRM:AS1210 , CAPPRM:CE , CAPPRM:MHLW , CAPPRM:MOM) + MOVOL:400V , CAPPRM:CE + COOL:AIR + MOVOL:500V) + FREQ:50HZ , ((MOVOL:380V , MOVOL:460V) + CAPPRM:ASME , CAPPRM:MHLW + MOVOL:460V) + FREQ:60HZ , CAPPRM:MHLW + COOL:AIR + MOVOL:200V) + CAPPRE:IEC , ((MOVOL:230V , MOVOL:575V) + COOL:AIR , MOVOL:460V) + CAPPRE:ULCUL + CAPPRM:ASME + FREQ:60HZ) + IDRY:N + MODEL:GA90VP_16

Ref	Part Number	Qty	Name	Validity	EL
	1088 0031 26	1	CONNECTOR 6-POLE	**(12/12/2018 - 24/02/2019)** **(25/02/2019 - 05/12/2019)** ((((CAPPRM:AS1210 , CAPPRM:CE , CAPPRM:MHLW , CAPPRM:MOM) + MOVOL:400V , CAPPRM:CE + MOVOL:500V , CAPPRM:MHLW + MOVOL:200V) + FREQ:50HZ , ((MOVOL:200V , MOVOL:460V) + CAPPRM:MHLW , (MOVOL:380V , MOVOL:460V) + CAPPRM:ASME) + FREQ:60HZ) + CAPPRE:IEC , (MOVOL:230V , MOVOL:460V , MOVOL:575V) + CAPPRE:ULCUL + CAPPRM:ASME + FREQ:60HZ) + COOL:AIR **(06/12/2019 - 16/12/2019)** ((((CAPPRM:AS1210 , CAPPRM:CE , CAPPRM:MHLW , CAPPRM:MOM) + MOVOL:400V , CAPPRM:MHLW + MOVOL:200V) + FREQ:50HZ , ((MOVOL:200V , MOVOL:460V) + CAPPRM:MHLW , (MOVOL:380V , MOVOL:460V) + CAPPRM:ASME) + FREQ:60HZ) + CAPPRE:IEC , (MOVOL:230V , MOVOL:460V , MOVOL:575V) + CAPPRE:ULCUL + CAPPRM:ASME + FREQ:60HZ) + COOL:AIR	2X31
	~~1089 9664 06~~	1	SWITCH	**(12/12/2018 - 24/02/2019)** **(25/02/2019 - 05/12/2019)** ((((CAPPRM:AS1210 , CAPPRM:CE , CAPPRM:MHLW , CAPPRM:MOM) + MOVOL:400V , CAPPRM:CE + MOVOL:500V , CAPPRM:MHLW + MOVOL:200V) + FREQ:50HZ , ((MOVOL:200V , MOVOL:460V) + CAPPRM:MHLW , (MOVOL:380V , MOVOL:460V) + CAPPRM:ASME) + FREQ:60HZ) + CAPPRE:IEC , (MOVOL:230V , MOVOL:460V , MOVOL:575V) + CAPPRE:ULCUL + CAPPRM:ASME + FREQ:60HZ) + COOL:AIR **(06/12/2019 - 16/12/2019)** ((((CAPPRM:AS1210 , CAPPRM:CE , CAPPRM:MHLW , CAPPRM:MOM) + MOVOL:400V , CAPPRM:MHLW + MOVOL:200V) + FREQ:50HZ , ((MOVOL:200V , MOVOL:460V) + CAPPRM:MHLW , (MOVOL:380V , MOVOL:460V) + CAPPRM:ASME) + FREQ:60HZ) + CAPPRE:IEC , (MOVOL:230V , MOVOL:460V , MOVOL:575V) + CAPPRE:ULCUL + CAPPRM:ASME + FREQ:60HZ) + COOL:AIR	Q15
	Substituted by:	1089 9551 97 - AUX.CONTACT CIRCUIT BREAKER (quantity: 1)			
	1089 9551 18	1	CIRCUIT BREAKER	**(12/12/2018 - 24/02/2019)** **(25/02/2019 - 05/12/2019)** ((((CAPPRM:AS1210 , CAPPRM:CE , CAPPRM:MHLW , CAPPRM:MOM) + MOVOL:400V , CAPPRM:CE + MOVOL:500V , CAPPRM:MHLW + MOVOL:200V) + FREQ:50HZ , ((MOVOL:200V , MOVOL:460V) + CAPPRM:MHLW , (MOVOL:380V , MOVOL:460V) + CAPPRM:ASME) + FREQ:60HZ) + CAPPRE:IEC , (MOVOL:230V , MOVOL:460V , MOVOL:575V) + CAPPRE:ULCUL + CAPPRM:ASME + FREQ:60HZ) + COOL:AIR **(06/12/2019 - 16/12/2019)** ((((CAPPRM:AS1210 , CAPPRM:CE , CAPPRM:MHLW , CAPPRM:MOM) + MOVOL:400V , CAPPRM:MHLW + MOVOL:200V) + FREQ:50HZ , ((MOVOL:200V , MOVOL:460V) + CAPPRM:MHLW , (MOVOL:380V , MOVOL:460V) + CAPPRM:ASME) + FREQ:60HZ) + CAPPRE:IEC , (MOVOL:230V , MOVOL:460V , MOVOL:575V) + CAPPRE:ULCUL + CAPPRM:ASME + FREQ:60HZ) + COOL:AIR	Q15

Legend:

CAPPRE:IEC - Component approval electrical:IEC
CAPPRM:ASME - Component approval mechanical:ASME
CAPPRM:MOM - Component approval mechanical:MOM
FREQ:60HZ - Frequency:60 Hz
MOVOL:200V - Supply voltage:200 V
MOVOL:400V - Supply voltage:400 V
MOVOL:575V - Supply voltage:575 V
CAPPRE:ULCUL - Component approval electrical:UL/cUL
CAPPRM:CE - Component approval mechanical:CE
COOL:AIR - Cooling:Air cooled
IDRY:N - Integrated dryer:No
MOVOL:230V - Supply voltage:230 V
MOVOL:460V - Supply voltage:460 V
CAPPRM:AS1210 - Component approval mechanical:AS1210
CAPPRM:MHLW - Component approval mechanical:MHLW
FREQ:50HZ - Frequency:50 Hz
MODEL:GA90VP_16 - Model:GA 90VSD+
MOVOL:380V - Supply voltage:380 V
MOVOL:500V - Supply voltage:500 V

21.15 - Cubicle components GA 90 VSD+ - (200V-380V-460V/60Hz - IEC, 230V-460V-575V/60Hz - UL-cUL, 200V-400V-500V/50Hz - IEC) - Pack (12/12/2018 - 16/12/2019)

((((CAPPRM:AS1210 , CAPPRM:CE , CAPPRM:MHLW , CAPPRM:MOM) + MOVOL:400V , CAPPRM:CE + COOL:AIR + MOVOL:500V) + FREQ:50HZ , ((MOVOL:380V , MOVOL:460V) + CAPPRM:ASME , CAPPRM:MHLW + MOVOL:460V) + FREQ:60HZ , CAPPRM:MHLW + COOL:AIR + MOVOL:200V) + CAPPRE:IEC , ((MOVOL:230V , MOVOL:575V) + COOL:AIR , MOVOL:460V) + CAPPRE:ULCUL + CAPPRM:ASME + FREQ:60HZ) + IDRY:N + MODEL:GA90VP_16

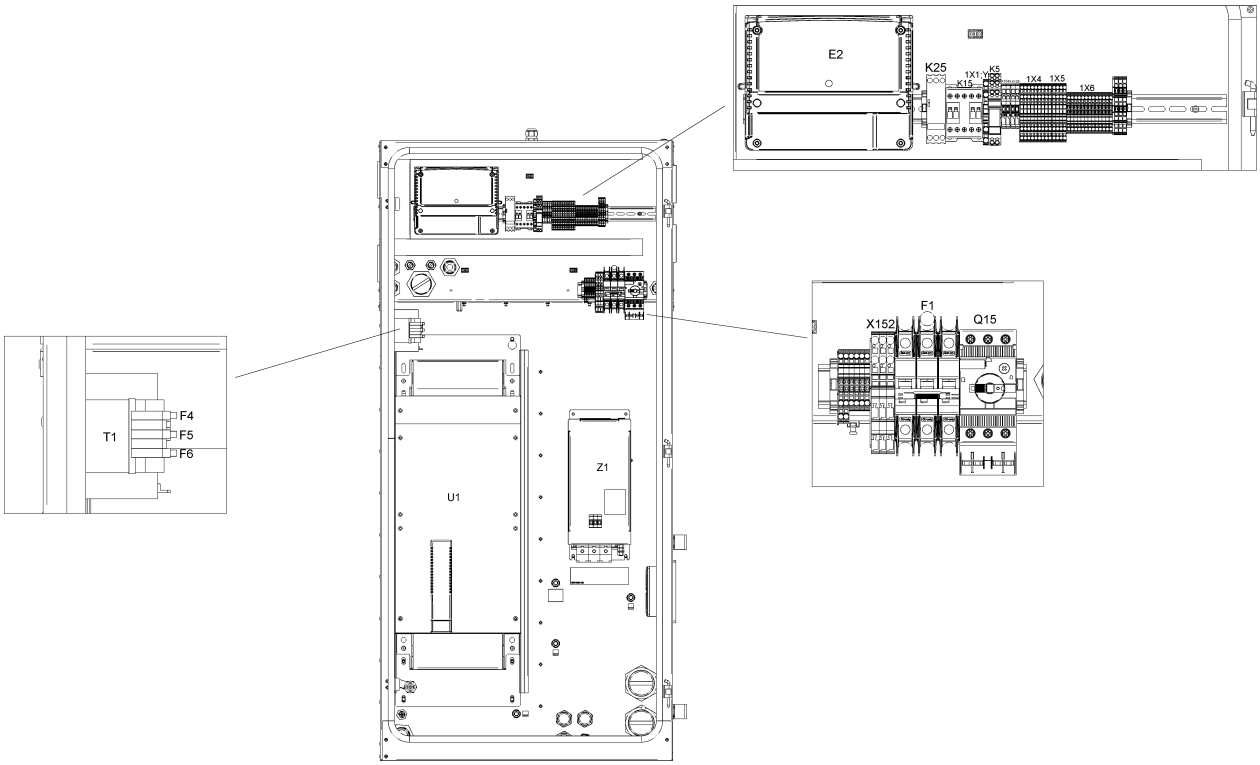

21.15 - Cubicle components GA 90 VSD+ - (200V-380V-460V/60Hz - IEC, 230V-460V-575V/60Hz - UL-cUL, 200V-400V-500V/50Hz - IEC) - Pack (12/12/2018 - 16/12/2019)

((((CAPPRM:AS1210 , CAPPRM:CE , CAPPRM:MHLW , CAPPRM:MOM) + MOVOL:400V , CAPPRM:CE + COOL:AIR + MOVOL:500V) + FREQ:50HZ , ((MOVOL:380V , MOVOL:460V) + CAPPRM:ASME , CAPPRM:MHLW + MOVOL:460V) + FREQ:60HZ , CAPPRM:MHLW + COOL:AIR + MOVOL:200V) + CAPPRE:IEC , ((MOVOL:230V , MOVOL:575V) + COOL:AIR , MOVOL:460V) + CAPPRE:ULCUL + CAPPRM:ASME + FREQ:60HZ) + IDRY:N + MODEL:GA90VP_16

Ref	Part Number	Qty	Name	Validity	EL
	1088 0038 26	1	TERMINAL	**(12/12/2018 - 24/02/2019)** **(25/02/2019 - 05/12/2019)** ((((CAPPRM:AS1210 , CAPPRM:CE , CAPPRM:MHLW , CAPPRM:MOM) + MOVOL:400V , CAPPRM:CE + MOVOL:500V , CAPPRM:MHLW + MOVOL:200V) + FREQ:50HZ , ((MOVOL:200V , MOVOL:460V) + CAPPRM:MHLW , (MOVOL:380V , MOVOL:460V) + CAPPRM:ASME) + FREQ:60HZ) + CAPPRE:IEC , (MOVOL:230V , MOVOL:460V , MOVOL:575V) + CAPPRE:ULCUL + CAPPRM:ASME + FREQ:60HZ) + COOL:AIR **(06/12/2019 - 16/12/2019)** ((((CAPPRM:AS1210 , CAPPRM:CE , CAPPRM:MHLW , CAPPRM:MOM) + MOVOL:400V , CAPPRM:MHLW + MOVOL:200V) + FREQ:50HZ , ((MOVOL:200V , MOVOL:460V) + CAPPRM:MHLW , (MOVOL:380V , MOVOL:460V) + CAPPRM:ASME) + FREQ:60HZ) + CAPPRE:IEC , (MOVOL:230V , MOVOL:460V , MOVOL:575V) + CAPPRE:ULCUL + CAPPRM:ASME + FREQ:60HZ) + COOL:AIR	1X1:Y/D
	1089 9602 79	1	CONTACTOR 110 V	**(12/12/2018 - 24/02/2019)** **(25/02/2019 - 05/12/2019)** ((((CAPPRM:AS1210 , CAPPRM:CE , CAPPRM:MHLW , CAPPRM:MOM) + MOVOL:400V , CAPPRM:CE + MOVOL:500V , CAPPRM:MHLW + MOVOL:200V) + FREQ:50HZ , ((MOVOL:200V , MOVOL:460V) + CAPPRM:MHLW , (MOVOL:380V , MOVOL:460V) + CAPPRM:ASME) + FREQ:60HZ) + CAPPRE:IEC , (MOVOL:230V , MOVOL:460V , MOVOL:575V) + CAPPRE:ULCUL + CAPPRM:ASME + FREQ:60HZ) + COOL:AIR **(06/12/2019 - 16/12/2019)** ((((CAPPRM:AS1210 , CAPPRM:CE , CAPPRM:MHLW , CAPPRM:MOM) + MOVOL:400V , CAPPRM:MHLW + MOVOL:200V) + FREQ:50HZ , ((MOVOL:200V , MOVOL:460V) + CAPPRM:MHLW , (MOVOL:380V , MOVOL:460V) + CAPPRM:ASME) + FREQ:60HZ) + CAPPRE:IEC , (MOVOL:230V , MOVOL:460V , MOVOL:575V) + CAPPRE:ULCUL + CAPPRM:ASME + FREQ:60HZ) + COOL:AIR	K15
	1089 9461 26	1	PHASE SEQUECNE RELAY	**(12/12/2018 - 24/02/2019)** **(25/02/2019 - 05/12/2019)** ((((CAPPRM:AS1210 , CAPPRM:CE , CAPPRM:MHLW , CAPPRM:MOM) + MOVOL:400V , CAPPRM:CE + MOVOL:500V , CAPPRM:MHLW + MOVOL:200V) + FREQ:50HZ , ((MOVOL:200V , MOVOL:460V) + CAPPRM:MHLW , (MOVOL:380V , MOVOL:460V) + CAPPRM:ASME) + FREQ:60HZ) + CAPPRE:IEC , (MOVOL:230V , MOVOL:460V , MOVOL:575V) + CAPPRE:ULCUL + CAPPRM:ASME + FREQ:60HZ) + COOL:AIR **(06/12/2019 - 16/12/2019)** ((((CAPPRM:AS1210 , CAPPRM:CE , CAPPRM:MHLW , CAPPRM:MOM) + MOVOL:400V , CAPPRM:MHLW + MOVOL:200V) + FREQ:50HZ , ((MOVOL:200V , MOVOL:460V) + CAPPRM:MHLW , (MOVOL:380V , MOVOL:460V) + CAPPRM:ASME) + FREQ:60HZ) + CAPPRE:IEC , (MOVOL:230V , MOVOL:460V , MOVOL:575V) + CAPPRE:ULCUL + CAPPRM:ASME + FREQ:60HZ) + COOL:AIR	K25

Legend:

CAPPRE:IEC - Component approval electrical:IEC
CAPPRE:ULCUL - Component approval electrical:UL/cUL
CAPPRM:AS1210 - Component approval mechanical:AS1210
CAPPRM:ASME - Component approval mechanical:ASME
CAPPRM:CE - Component approval mechanical:CE
CAPPRM:MHLW - Component approval mechanical:MHLW
CAPPRM:MOM - Component approval mechanical:MOM
COOL:AIR - Cooling:Air cooled
FREQ:50HZ - Frequency:50 Hz
FREQ:60HZ - Frequency:60 Hz
IDRY:N - Integrated dryer:No
MODEL:GA90VP_16 - Model:GA 90VSD+
MOVOL:200V - Supply voltage:200 V
MOVOL:230V - Supply voltage:230 V
MOVOL:380V - Supply voltage:380 V
MOVOL:400V - Supply voltage:400 V
MOVOL:460V - Supply voltage:460 V
MOVOL:500V - Supply voltage:500 V
MOVOL:575V - Supply voltage:575 V

21.15 - Cubicle components GA 90 VSD+ - (200V-380V-460V/60Hz - IEC, 230V-460V-575V/60Hz - UL-cUL, 200V-400V-500V/50Hz - IEC) - Pack (12/12/2018 - 16/12/2019)

((((CAPPRM:AS1210 , CAPPRM:CE , CAPPRM:MHLW , CAPPRM:MOM) + MOVOL:400V , CAPPRM:CE + COOL:AIR + MOVOL:500V) + FREQ:50HZ , ((MOVOL:380V , MOVOL:460V) + CAPPRM:ASME , CAPPRM:MHLW + MOVOL:460V) + FREQ:60HZ , CAPPRM:MHLW + COOL:AIR + MOVOL:200V) + CAPPRE:IEC , ((MOVOL:230V , MOVOL:575V) + COOL:AIR , MOVOL:460V) + CAPPRE:ULCUL + CAPPRM:ASME + FREQ:60HZ) + IDRY:N + MODEL:GA90VP_16

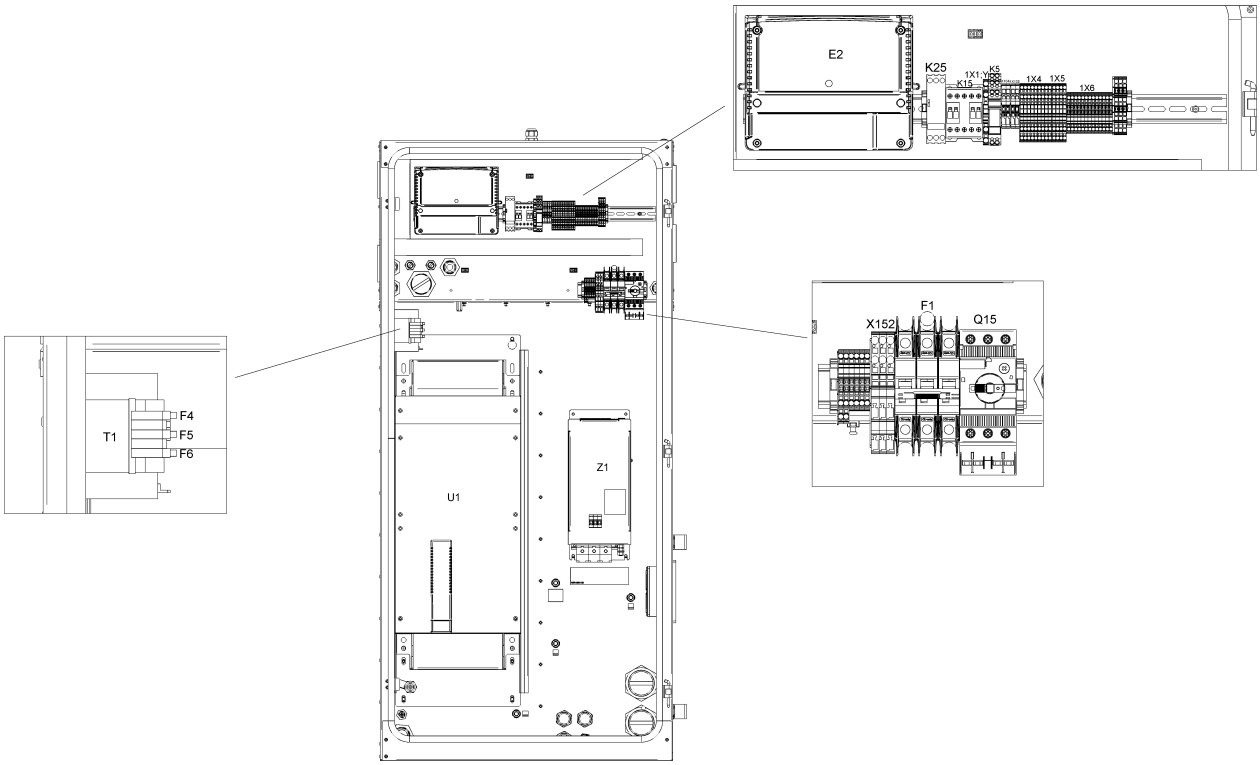

21.15 - Cubicle components GA 90 VSD+ - (200V-380V-460V/60Hz - IEC, 230V-460V-575V/60Hz - UL-cUL, 200V-400V-500V/50Hz - IEC) - Pack (12/12/2018 - 16/12/2019)

((((CAPPRM:AS1210 , CAPPRM:CE , CAPPRM:MHLW , CAPPRM:MOM) + MOVOL:400V , CAPPRM:CE + COOL:AIR + MOVOL:500V) + FREQ:50HZ , ((MOVOL:380V , MOVOL:460V) + CAPPRM:ASME , CAPPRM:MHLW + MOVOL:460V) + FREQ:60HZ , CAPPRM:MHLW + COOL:AIR + MOVOL:200V) + CAPPRE:IEC , ((MOVOL:230V , MOVOL:575V) + COOL:AIR , MOVOL:460V) + CAPPRE:ULCUL + CAPPRM:ASME + FREQ:60HZ) + IDRY:N + MODEL:GA90VP_16

Ref	Part Number	Qty	Name	Validity	EL
	1088 0032 17	1	RELAY 115 VAC	**(12/12/2018 - 24/02/2019)** **(25/02/2019 - 05/12/2019)** ((((CAPPRM:AS1210 , CAPPRM:CE , CAPPRM:MHLW , CAPPRM:MOM) + MOVOL:400V , CAPPRM:CE + MOVOL:500V , CAPPRM:MHLW + MOVOL:200V) + FREQ:50HZ , ((MOVOL:200V , MOVOL:460V) + CAPPRM:MHLW , (MOVOL:380V , MOVOL:460V) + CAPPRM:ASME) + FREQ:60HZ) + CAPPRE:IEC , (MOVOL:230V , MOVOL:460V , MOVOL:575V) + CAPPRE:ULCUL + CAPPRM:ASME + FREQ:60HZ) + COOL:AIR **(06/12/2019 - 16/12/2019)** ((((CAPPRM:AS1210 , CAPPRM:CE , CAPPRM:MHLW , CAPPRM:MOM) + MOVOL:400V , CAPPRM:MHLW + MOVOL:200V) + FREQ:50HZ , ((MOVOL:200V , MOVOL:460V) + CAPPRM:MHLW , (MOVOL:380V , MOVOL:460V) + CAPPRM:ASME) + FREQ:60HZ) + CAPPRE:IEC , (MOVOL:230V , MOVOL:460V , MOVOL:575V) + CAPPRE:ULCUL + CAPPRM:ASME + FREQ:60HZ) + COOL:AIR	K5
	0991 8011 21	AR	CABLE TRAY	**(12/12/2018 - 24/02/2019)** **(25/02/2019 - 05/12/2019)** ((((CAPPRM:AS1210 , CAPPRM:CE , CAPPRM:MHLW , CAPPRM:MOM) + MOVOL:400V , CAPPRM:CE + MOVOL:500V , CAPPRM:MHLW + MOVOL:200V) + FREQ:50HZ , ((MOVOL:200V , MOVOL:460V) + CAPPRM:MHLW , (MOVOL:380V , MOVOL:460V) + CAPPRM:ASME) + FREQ:60HZ) + CAPPRE:IEC , (MOVOL:230V , MOVOL:460V , MOVOL:575V) + CAPPRE:ULCUL + CAPPRM:ASME + FREQ:60HZ) + COOL:AIR **(06/12/2019 - 16/12/2019)** ((((CAPPRM:AS1210 , CAPPRM:CE , CAPPRM:MHLW , CAPPRM:MOM) + MOVOL:400V , CAPPRM:MHLW + MOVOL:200V) + FREQ:50HZ , ((MOVOL:200V , MOVOL:460V) + CAPPRM:MHLW , (MOVOL:380V , MOVOL:460V) + CAPPRM:ASME) + FREQ:60HZ) + CAPPRE:IEC , (MOVOL:230V , MOVOL:460V , MOVOL:575V) + CAPPRE:ULCUL + CAPPRM:ASME + FREQ:60HZ) + COOL:AIR	L=1384mm
	0697 9811 16	1	PLUG	**(12/12/2018 - 24/02/2019)** **(25/02/2019 - 05/12/2019)** ((((CAPPRM:AS1210 , CAPPRM:CE , CAPPRM:MHLW , CAPPRM:MOM) + MOVOL:400V , CAPPRM:CE + MOVOL:500V , CAPPRM:MHLW + MOVOL:200V) + FREQ:50HZ , ((MOVOL:200V , MOVOL:460V) + CAPPRM:MHLW , (MOVOL:380V , MOVOL:460V) + CAPPRM:ASME) + FREQ:60HZ) + CAPPRE:IEC , (MOVOL:230V , MOVOL:460V , MOVOL:575V) + CAPPRE:ULCUL + CAPPRM:ASME + FREQ:60HZ) + COOL:AIR **(06/12/2019 - 16/12/2019)** ((((CAPPRM:AS1210 , CAPPRM:CE , CAPPRM:MHLW , CAPPRM:MOM) + MOVOL:400V , CAPPRM:MHLW + MOVOL:200V) + FREQ:50HZ , ((MOVOL:200V , MOVOL:460V) + CAPPRM:MHLW , (MOVOL:380V , MOVOL:460V) + CAPPRM:ASME) + FREQ:60HZ) + CAPPRE:IEC , (MOVOL:230V , MOVOL:460V , MOVOL:575V) + CAPPRE:ULCUL + CAPPRM:ASME + FREQ:60HZ) + COOL:AIR	
	Electrical legend:	Plug for Dryer			

Legend:

CAPPRE:IEC - Component approval electrical:IEC
CAPPRM:ASME - Component approval mechanical:ASME
CAPPRM:MOM - Component approval mechanical:MOM
FREQ:60HZ - Frequency:60 Hz
MOVOL:200V - Supply voltage:200 V
MOVOL:400V - Supply voltage:400 V
MOVOL:575V - Supply voltage:575 V
CAPPRE:ULCUL - Component approval electrical:UL/cUL
CAPPRM:CE - Component approval mechanical:CE
COOL:AIR - Cooling:Air cooled
IDRY:N - Integrated dryer:No
MOVOL:230V - Supply voltage:230 V
MOVOL:460V - Supply voltage:460 V
CAPPRM:AS1210 - Component approval mechanical:AS1210
CAPPRM:MHLW - Component approval mechanical:MHLW
FREQ:50HZ - Frequency:50 Hz
MODEL:GA90VP_16 - Model:GA 90VSD+
MOVOL:380V - Supply voltage:380 V
MOVOL:500V - Supply voltage:500 V

21.15 - Cubicle components GA 90 VSD+ - (200V-380V-460V/60Hz - IEC, 230V-460V-575V/60Hz - UL-cUL, 200V-400V-500V/50Hz - IEC) - Pack (12/12/2018 - 16/12/2019)

((((CAPPRM:AS1210 , CAPPRM:CE , CAPPRM:MHLW , CAPPRM:MOM) + MOVOL:400V , CAPPRM:CE + COOL:AIR + MOVOL:500V) + FREQ:50HZ , ((MOVOL:380V , MOVOL:460V) + CAPPRM:ASME , CAPPRM:MHLW + MOVOL:460V) + FREQ:60HZ , CAPPRM:MHLW + COOL:AIR + MOVOL:200V) + CAPPRE:IEC , ((MOVOL:230V , MOVOL:575V) + COOL:AIR , MOVOL:460V) + CAPPRE:ULCUL + CAPPRM:ASME + FREQ:60HZ) + IDRY:N + MODEL:GA90VP_16

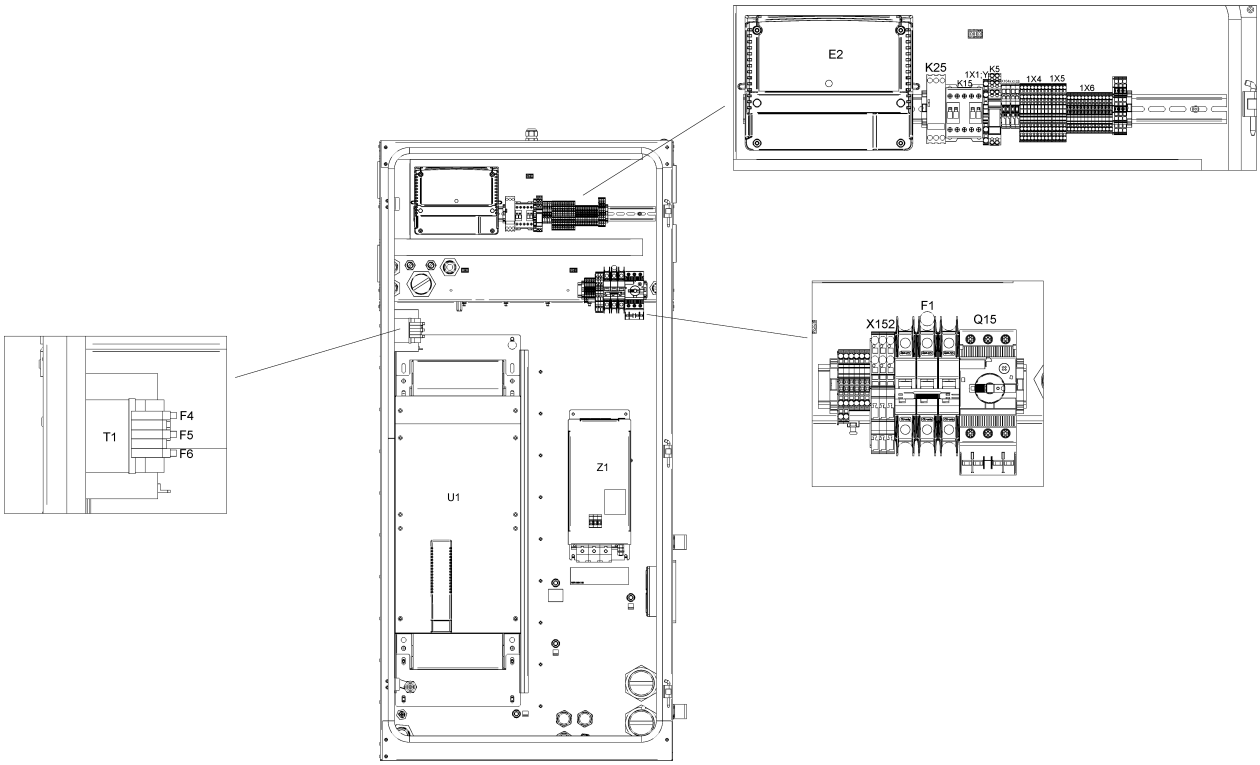

Ref	Part Number	Qty	Name	Validity	EL
	0989 3700 47	1	LOCKNUT	**(12/12/2018 - 24/02/2019)** **(25/02/2019 - 05/12/2019)** ((((CAPPRM:AS1210 , CAPPRM:CE , CAPPRM:MHLW , CAPPRM:MOM) + MOVOL:400V , CAPPRM:CE + MOVOL:500V , CAPPRM:MHLW + MOVOL:200V) + FREQ:50HZ , ((MOVOL:200V , MOVOL:460V) + CAPPRM:MHLW , (MOVOL:380V , MOVOL:460V) + CAPPRM:ASME) + FREQ:60HZ) + CAPPRE:IEC , (MOVOL:230V , MOVOL:460V , MOVOL:575V) + CAPPRE:ULCUL + CAPPRM:ASME + FREQ:60HZ) + COOL:AIR **(06/12/2019 - 16/12/2019)** ((((CAPPRM:AS1210 , CAPPRM:CE , CAPPRM:MHLW , CAPPRM:MOM) + MOVOL:400V , CAPPRM:MHLW + MOVOL:200V) + FREQ:50HZ , ((MOVOL:200V , MOVOL:460V) + CAPPRM:MHLW , (MOVOL:380V , MOVOL:460V) + CAPPRM:ASME) + FREQ:60HZ) + CAPPRE:IEC , (MOVOL:230V , MOVOL:460V , MOVOL:575V) + CAPPRE:ULCUL + CAPPRM:ASME + FREQ:60HZ) + COOL:AIR	
	Electrical legend:	Locknut for dryer			
	0697 9811 11	2	PLUG	**(12/12/2018 - 24/02/2019)** **(25/02/2019 - 05/12/2019)** ((((CAPPRM:AS1210 , CAPPRM:CE , CAPPRM:MHLW , CAPPRM:MOM) + MOVOL:400V , CAPPRM:CE + MOVOL:500V , CAPPRM:MHLW + MOVOL:200V) + FREQ:50HZ , ((MOVOL:200V , MOVOL:460V) + CAPPRM:MHLW , (MOVOL:380V , MOVOL:460V) + CAPPRM:ASME) + FREQ:60HZ) + CAPPRE:IEC , (MOVOL:230V , MOVOL:460V , MOVOL:575V) + CAPPRE:ULCUL + CAPPRM:ASME + FREQ:60HZ) + COOL:AIR **(06/12/2019 - 16/12/2019)** ((((CAPPRM:AS1210 , CAPPRM:CE , CAPPRM:MHLW , CAPPRM:MOM) + MOVOL:400V , CAPPRM:MHLW + MOVOL:200V) + FREQ:50HZ , ((MOVOL:200V , MOVOL:460V) + CAPPRM:MHLW , (MOVOL:380V , MOVOL:460V) + CAPPRM:ASME) + FREQ:60HZ) + CAPPRE:IEC , (MOVOL:230V , MOVOL:460V , MOVOL:575V) + CAPPRE:ULCUL + CAPPRM:ASME + FREQ:60HZ) + COOL:AIR	
	Electrical legend:	Plug for FF Drain/LAT			
	0989 3700 42	2	NUT	**(12/12/2018 - 24/02/2019)** **(25/02/2019 - 05/12/2019)** ((((CAPPRM:AS1210 , CAPPRM:CE , CAPPRM:MHLW , CAPPRM:MOM) + MOVOL:400V , CAPPRM:CE + MOVOL:500V , CAPPRM:MHLW + MOVOL:200V) + FREQ:50HZ , ((MOVOL:200V , MOVOL:460V) + CAPPRM:MHLW , (MOVOL:380V , MOVOL:460V) + CAPPRM:ASME) + FREQ:60HZ) + CAPPRE:IEC , (MOVOL:230V , MOVOL:460V , MOVOL:575V) + CAPPRE:ULCUL + CAPPRM:ASME + FREQ:60HZ) + COOL:AIR **(06/12/2019 - 16/12/2019)** ((((CAPPRM:AS1210 , CAPPRM:CE , CAPPRM:MHLW , CAPPRM:MOM) + MOVOL:400V , CAPPRM:MHLW + MOVOL:200V) + FREQ:50HZ , ((MOVOL:200V , MOVOL:460V) + CAPPRM:MHLW , (MOVOL:380V , MOVOL:460V) + CAPPRM:ASME) + FREQ:60HZ) + CAPPRE:IEC , (MOVOL:230V , MOVOL:460V , MOVOL:575V) + CAPPRE:ULCUL + CAPPRM:ASME + FREQ:60HZ) + COOL:AIR	
	Electrical legend:	Locknut for FF Drain/LAT			

Legend:

CAPPRE:IEC - Component approval electrical:IEC
CAPPRE:ULCUL - Component approval electrical:UL/cUL
CAPPRM:AS1210 - Component approval mechanical:AS1210
CAPPRM:ASME - Component approval mechanical:ASME
CAPPRM:CE - Component approval mechanical:CE
CAPPRM:MHLW - Component approval mechanical:MHLW
CAPPRM:MOM - Component approval mechanical:MOM
COOL:AIR - Cooling:Air cooled
FREQ:50HZ - Frequency:50 Hz
FREQ:60HZ - Frequency:60 Hz
IDRY:N - Integrated dryer:No
MODEL:GA90VP_16 - Model:GA 90VSD+
MOVOL:200V - Supply voltage:200 V
MOVOL:230V - Supply voltage:230 V
MOVOL:380V - Supply voltage:380 V
MOVOL:400V - Supply voltage:400 V
MOVOL:460V - Supply voltage:460 V
MOVOL:500V - Supply voltage:500 V
MOVOL:575V - Supply voltage:575 V

21.15 - Cubicle components GA 90 VSD+ - (200V-380V-460V/60Hz - IEC, 230V-460V-575V/60Hz - UL-cUL, 200V-400V-500V/50Hz - IEC) - Pack (12/12/2018 - 16/12/2019)

((((CAPPRM:AS1210 , CAPPRM:CE , CAPPRM:MHLW , CAPPRM:MOM) + MOVOL:400V , CAPPRM:CE + COOL:AIR + MOVOL:500V) + FREQ:50HZ , ((MOVOL:380V , MOVOL:460V) + CAPPRM:ASME , CAPPRM:MHLW + MOVOL:460V) + FREQ:60HZ , CAPPRM:MHLW + COOL:AIR + MOVOL:200V) + CAPPRE:IEC , ((MOVOL:230V , MOVOL:575V) + COOL:AIR , MOVOL:460V) + CAPPRE:ULCUL + CAPPRM:ASME + FREQ:60HZ) + IDRY:N + MODEL:GA90VP_16

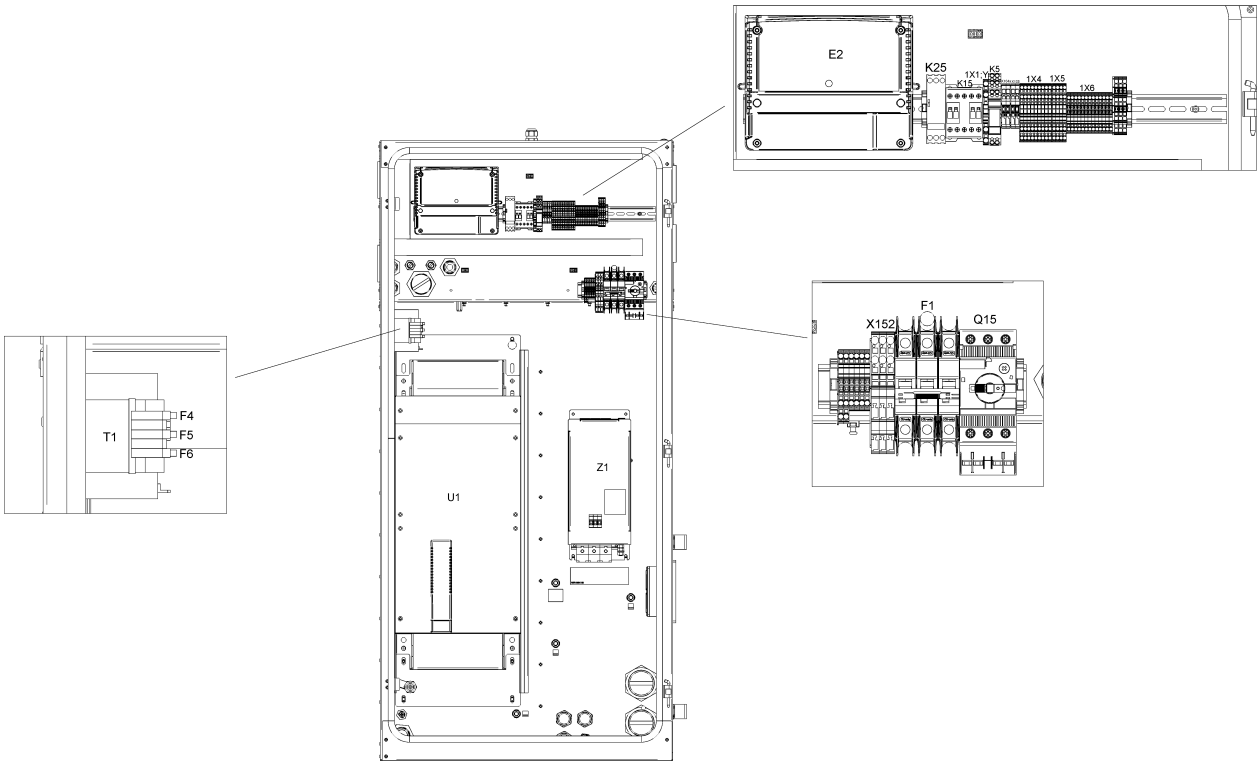

21.15 - Cubicle components GA 90 VSD+ - (200V-380V-460V/60Hz - IEC, 230V-460V-575V/60Hz - UL-cUL, 200V-400V-500V/50Hz - IEC) - Pack (12/12/2018 - 16/12/2019)

((((CAPPRM:AS1210 , CAPPRM:CE , CAPPRM:MHLW , CAPPRM:MOM) + MOVOL:400V , CAPPRM:CE + COOL:AIR + MOVOL:500V) + FREQ:50HZ , ((MOVOL:380V , MOVOL:460V) + CAPPRM:ASME , CAPPRM:MHLW + MOVOL:460V) + FREQ:60HZ , CAPPRM:MHLW + COOL:AIR + MOVOL:200V) + CAPPRE:IEC , ((MOVOL:230V , MOVOL:575V) + COOL:AIR , MOVOL:460V) + CAPPRE:ULCUL + CAPPRM:ASME + FREQ:60HZ) + IDRY:N + MODEL:GA90VP_16

Ref	Part Number	Qty	Name	Validity	EL
	1088 0031 13	1	CONNECTOR 13-POLE	**(12/12/2018 - 24/02/2019)** **(25/02/2019 - 05/12/2019)** ((((CAPPRM:AS1210 , CAPPRM:CE , CAPPRM:MHLW , CAPPRM:MOM) + MOVOL:400V , CAPPRM:CE + MOVOL:500V , CAPPRM:MHLW + MOVOL:200V) + FREQ:50HZ , ((MOVOL:200V , MOVOL:460V) + CAPPRM:MHLW , (MOVOL:380V , MOVOL:460V) + CAPPRM:ASME) + FREQ:60HZ) + CAPPRE:IEC , (MOVOL:230V , MOVOL:460V , MOVOL:575V) + CAPPRE:ULCUL + CAPPRM:ASME + FREQ:60HZ) + COOL:AIR **(06/12/2019 - 16/12/2019)** ((((CAPPRM:AS1210 , CAPPRM:CE , CAPPRM:MHLW , CAPPRM:MOM) + MOVOL:400V , CAPPRM:MHLW + MOVOL:200V) + FREQ:50HZ , ((MOVOL:200V , MOVOL:460V) + CAPPRM:MHLW , (MOVOL:380V , MOVOL:460V) + CAPPRM:ASME) + FREQ:60HZ) + CAPPRE:IEC , (MOVOL:230V , MOVOL:460V , MOVOL:575V) + CAPPRE:ULCUL + CAPPRM:ASME + FREQ:60HZ) + COOL:AIR	1X30
	1088 0037 82	1	CONNECTOR	**(12/12/2018 - 24/02/2019)** **(25/02/2019 - 05/12/2019)** ((((CAPPRM:AS1210 , CAPPRM:CE , CAPPRM:MHLW , CAPPRM:MOM) + MOVOL:400V , CAPPRM:CE + MOVOL:500V , CAPPRM:MHLW + MOVOL:200V) + FREQ:50HZ , ((MOVOL:200V , MOVOL:460V) + CAPPRM:MHLW , (MOVOL:380V , MOVOL:460V) + CAPPRM:ASME) + FREQ:60HZ) + CAPPRE:IEC , (MOVOL:230V , MOVOL:460V , MOVOL:575V) + CAPPRE:ULCUL + CAPPRM:ASME + FREQ:60HZ) + COOL:AIR **(06/12/2019 - 16/12/2019)** ((((CAPPRM:AS1210 , CAPPRM:CE , CAPPRM:MHLW , CAPPRM:MOM) + MOVOL:400V , CAPPRM:MHLW + MOVOL:200V) + FREQ:50HZ , ((MOVOL:200V , MOVOL:460V) + CAPPRM:MHLW , (MOVOL:380V , MOVOL:460V) + CAPPRM:ASME) + FREQ:60HZ) + CAPPRE:IEC , (MOVOL:230V , MOVOL:460V , MOVOL:575V) + CAPPRE:ULCUL + CAPPRM:ASME + FREQ:60HZ) + COOL:AIR	3X34
	0697 9811 13	1	PLUG	**(12/12/2018 - 24/02/2019)** **(25/02/2019 - 05/12/2019)** ((((CAPPRM:AS1210 , CAPPRM:CE , CAPPRM:MHLW , CAPPRM:MOM) + MOVOL:400V , CAPPRM:CE + MOVOL:500V , CAPPRM:MHLW + MOVOL:200V) + FREQ:50HZ , ((MOVOL:200V , MOVOL:460V) + CAPPRM:MHLW , (MOVOL:380V , MOVOL:460V) + CAPPRM:ASME) + FREQ:60HZ) + CAPPRE:IEC , (MOVOL:230V , MOVOL:460V , MOVOL:575V) + CAPPRE:ULCUL + CAPPRM:ASME + FREQ:60HZ) + COOL:AIR **(06/12/2019 - 16/12/2019)** ((((CAPPRM:AS1210 , CAPPRM:CE , CAPPRM:MHLW , CAPPRM:MOM) + MOVOL:400V , CAPPRM:MHLW + MOVOL:200V) + FREQ:50HZ , ((MOVOL:200V , MOVOL:460V) + CAPPRM:MHLW , (MOVOL:380V , MOVOL:460V) + CAPPRM:ASME) + FREQ:60HZ) + CAPPRE:IEC , (MOVOL:230V , MOVOL:460V , MOVOL:575V) + CAPPRE:ULCUL + CAPPRM:ASME + FREQ:60HZ) + COOL:AIR	

Electrical legend: Energy recovery

Legend:

CAPPRE:IEC - Component approval electrical:IEC
CAPPRM:ASME - Component approval mechanical:ASME
CAPPRM:MOM - Component approval mechanical:MOM
FREQ:60HZ - Frequency:60 Hz
MOVOL:200V - Supply voltage:200 V
MOVOL:400V - Supply voltage:400 V
MOVOL:575V - Supply voltage:575 V
CAPPRE:ULCUL - Component approval electrical:UL/cUL
CAPPRM:CE - Component approval mechanical:CE
COOL:AIR - Cooling:Air cooled
IDRY:N - Integrated dryer:No
MOVOL:230V - Supply voltage:230 V
MOVOL:460V - Supply voltage:460 V
CAPPRM:AS1210 - Component approval mechanical:AS1210
CAPPRM:MHLW - Component approval mechanical:MHLW
FREQ:50HZ - Frequency:50 Hz
MODEL:GA90VP_16 - Model:GA 90VSD+
MOVOL:380V - Supply voltage:380 V
MOVOL:500V - Supply voltage:500 V

21.15 - Cubicle components GA 90 VSD+ - (200V-380V-460V/60Hz - IEC, 230V-460V-575V/60Hz - UL-cUL, 200V-400V-500V/50Hz - IEC) - Pack (12/12/2018 - 16/12/2019)

((((CAPPRM:AS1210 , CAPPRM:CE , CAPPRM:MHLW , CAPPRM:MOM) + MOVOL:400V , CAPPRM:CE + COOL:AIR + MOVOL:500V) + FREQ:50HZ , ((MOVOL:380V , MOVOL:460V) + CAPPRM:ASME , CAPPRM:MHLW + MOVOL:460V) + FREQ:60HZ , CAPPRM:MHLW + COOL:AIR + MOVOL:200V) + CAPPRE:IEC , ((MOVOL:230V , MOVOL:575V) + COOL:AIR , MOVOL:460V) + CAPPRE:ULCUL + CAPPRM:ASME + FREQ:60HZ) + IDRY:N + MODEL:GA90VP_16

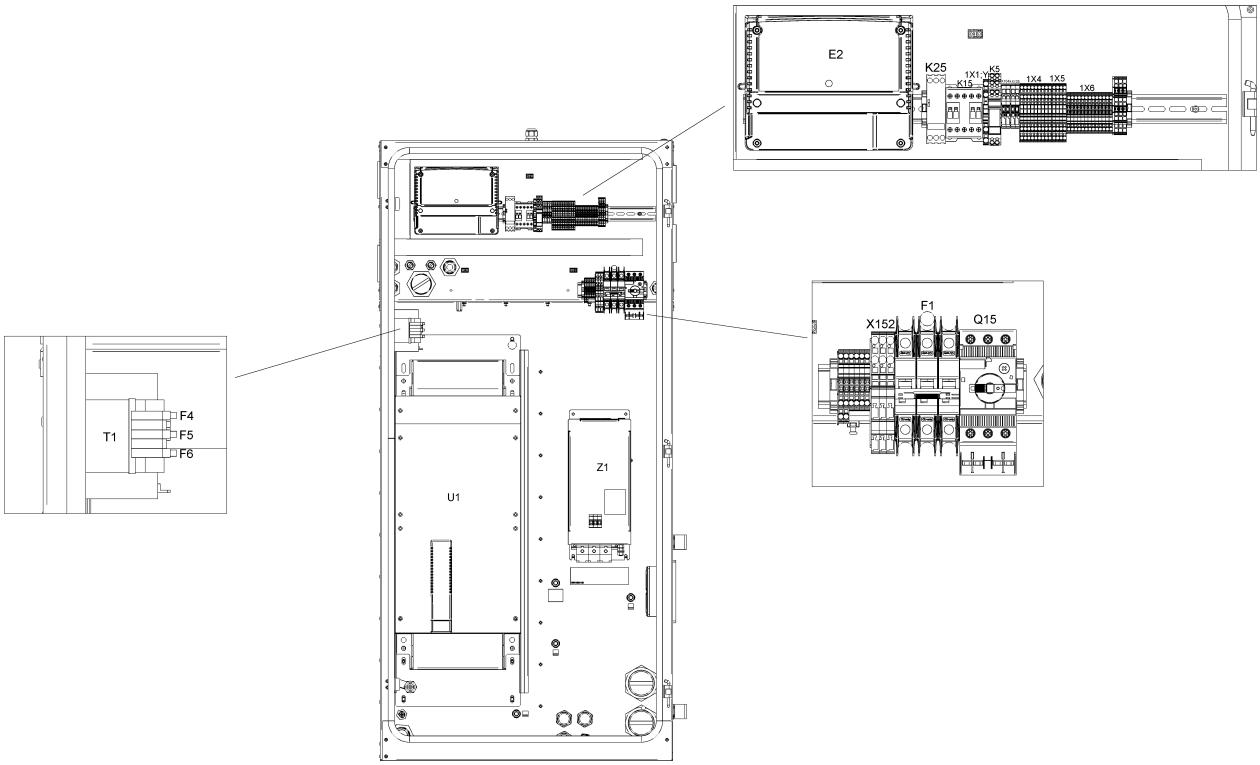

Ref	Part Number	Qty	Name	Validity	EL
	0989 3700 44	1	LOCKNUT	**(12/12/2018 - 24/02/2019)** **(25/02/2019 - 05/12/2019)** ((((CAPPRM:AS1210 , CAPPRM:CE , CAPPRM:MHLW , CAPPRM:MOM) + MOVOL:400V , CAPPRM:CE + MOVOL:500V , CAPPRM:MHLW + MOVOL:200V) + FREQ:50HZ , ((MOVOL:200V , MOVOL:460V) + CAPPRM:MHLW , (MOVOL:380V , MOVOL:460V) + CAPPRM:ASME) + FREQ:60HZ) + CAPPRE:IEC , (MOVOL:230V , MOVOL:460V , MOVOL:575V) + CAPPRE:ULCUL + CAPPRM:ASME + FREQ:60HZ) + COOL:AIR **(06/12/2019 - 16/12/2019)** ((((CAPPRM:AS1210 , CAPPRM:CE , CAPPRM:MHLW , CAPPRM:MOM) + MOVOL:400V , CAPPRM:MHLW + MOVOL:200V) + FREQ:50HZ , ((MOVOL:200V , MOVOL:460V) + CAPPRM:MHLW , (MOVOL:380V , MOVOL:460V) + CAPPRM:ASME) + FREQ:60HZ) + CAPPRE:IEC , (MOVOL:230V , MOVOL:460V , MOVOL:575V) + CAPPRE:ULCUL + CAPPRM:ASME + FREQ:60HZ) + COOL:AIR	
	Electrical legend:	Energy recovery			
	0697 9811 12	1	PLUG	**(12/12/2018 - 24/02/2019)** **(25/02/2019 - 05/12/2019)** ((((CAPPRM:AS1210 , CAPPRM:CE , CAPPRM:MHLW , CAPPRM:MOM) + MOVOL:400V , CAPPRM:CE + MOVOL:500V , CAPPRM:MHLW + MOVOL:200V) + FREQ:50HZ , ((MOVOL:200V , MOVOL:460V) + CAPPRM:MHLW , (MOVOL:380V , MOVOL:460V) + CAPPRM:ASME) + FREQ:60HZ) + CAPPRE:IEC , (MOVOL:230V , MOVOL:460V , MOVOL:575V) + CAPPRE:ULCUL + CAPPRM:ASME + FREQ:60HZ) + COOL:AIR **(06/12/2019 - 16/12/2019)** ((((CAPPRM:AS1210 , CAPPRM:CE , CAPPRM:MHLW , CAPPRM:MOM) + MOVOL:400V , CAPPRM:MHLW + MOVOL:200V) + FREQ:50HZ , ((MOVOL:200V , MOVOL:460V) + CAPPRM:MHLW , (MOVOL:380V , MOVOL:460V) + CAPPRM:ASME) + FREQ:60HZ) + CAPPRE:IEC , (MOVOL:230V , MOVOL:460V , MOVOL:575V) + CAPPRE:ULCUL + CAPPRM:ASME + FREQ:60HZ) + COOL:AIR	
	Electrical legend:	Control circuit of T10			
	0989 3700 43	1	NUT	**(12/12/2018 - 24/02/2019)** **(25/02/2019 - 05/12/2019)** ((((CAPPRM:AS1210 , CAPPRM:CE , CAPPRM:MHLW , CAPPRM:MOM) + MOVOL:400V , CAPPRM:CE + MOVOL:500V , CAPPRM:MHLW + MOVOL:200V) + FREQ:50HZ , ((MOVOL:200V , MOVOL:460V) + CAPPRM:MHLW , (MOVOL:380V , MOVOL:460V) + CAPPRM:ASME) + FREQ:60HZ) + CAPPRE:IEC , (MOVOL:230V , MOVOL:460V , MOVOL:575V) + CAPPRE:ULCUL + CAPPRM:ASME + FREQ:60HZ) + COOL:AIR **(06/12/2019 - 16/12/2019)** ((((CAPPRM:AS1210 , CAPPRM:CE , CAPPRM:MHLW , CAPPRM:MOM) + MOVOL:400V , CAPPRM:MHLW + MOVOL:200V) + FREQ:50HZ , ((MOVOL:200V , MOVOL:460V) + CAPPRM:MHLW , (MOVOL:380V , MOVOL:460V) + CAPPRM:ASME) + FREQ:60HZ) + CAPPRE:IEC , (MOVOL:230V , MOVOL:460V , MOVOL:575V) + CAPPRE:ULCUL + CAPPRM:ASME + FREQ:60HZ) + COOL:AIR	
	Electrical legend:	Control circuit of T10			

Legend:

CAPPRE:IEC - Component approval electrical:IEC
CAPPRM:ASME - Component approval mechanical:ASME
CAPPRM:MOM - Component approval mechanical:MOM
FREQ:60HZ - Frequency:60 Hz
MOVOL:200V - Supply voltage:200 V
MOVOL:400V - Supply voltage:400 V
MOVOL:575V - Supply voltage:575 V
CAPPRE:ULCUL - Component approval electrical:UL/cUL
CAPPRM:CE - Component approval mechanical:CE
COOL:AIR - Cooling:Air cooled
IDRY:N - Integrated dryer:No
MOVOL:230V - Supply voltage:230 V
MOVOL:460V - Supply voltage:460 V
CAPPRM:AS1210 - Component approval mechanical:AS1210
CAPPRM:MHLW - Component approval mechanical:MHLW
FREQ:50HZ - Frequency:50 Hz
MODEL:GA90VP_16 - Model:GA 90VSD+
MOVOL:380V - Supply voltage:380 V
MOVOL:500V - Supply voltage:500 V

21.15 - Cubicle components GA 90 VSD+ - (200V-380V-460V/60Hz - IEC, 230V-460V-575V/60Hz - UL-cUL, 200V-400V-500V/50Hz - IEC) - Pack (12/12/2018 - 16/12/2019)

((((CAPPRM:AS1210 , CAPPRM:CE , CAPPRM:MHLW , CAPPRM:MOM) + MOVOL:400V , CAPPRM:CE + COOL:AIR + MOVOL:500V) + FREQ:50HZ , ((MOVOL:380V , MOVOL:460V) + CAPPRM:ASME , CAPPRM:MHLW + MOVOL:460V) + FREQ:60HZ , CAPPRM:MHLW + COOL:AIR + MOVOL:200V) + CAPPRE:IEC , ((MOVOL:230V , MOVOL:575V) + COOL:AIR , MOVOL:460V) + CAPPRE:ULCUL + CAPPRM:ASME + FREQ:60HZ) + IDRY:N + MODEL:GA90VP_16

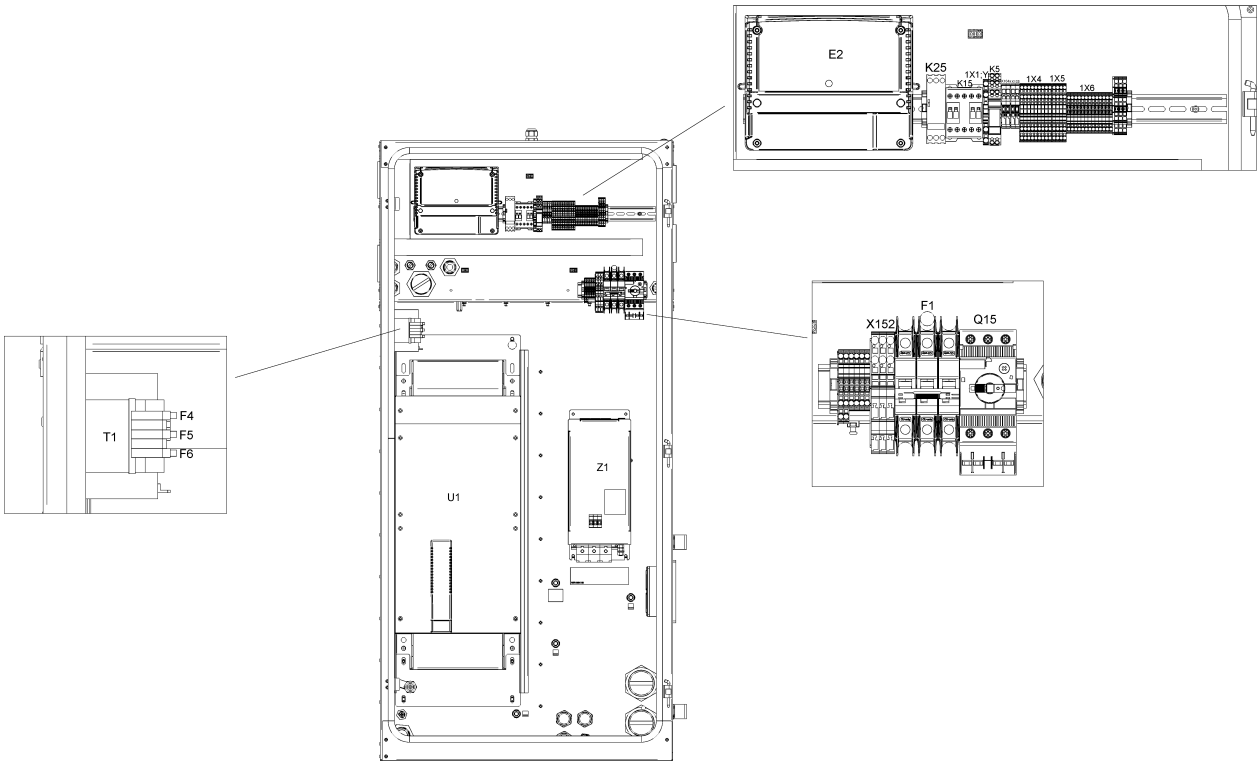

21.15 - Cubicle components GA 90 VSD+ - (200V-380V-460V/60Hz - IEC, 230V-460V-575V/60Hz - UL-cUL, 200V-400V-500V/50Hz - IEC) - Pack (12/12/2018 - 16/12/2019)

((((CAPPRM:AS1210 , CAPPRM:CE , CAPPRM:MHLW , CAPPRM:MOM) + MOVOL:400V , CAPPRM:CE + COOL:AIR + MOVOL:500V) + FREQ:50HZ , ((MOVOL:380V , MOVOL:460V) + CAPPRM:ASME , CAPPRM:MHLW + MOVOL:460V) + FREQ:60HZ , CAPPRM:MHLW + COOL:AIR + MOVOL:200V) + CAPPRE:IEC , ((MOVOL:230V , MOVOL:575V) + COOL:AIR , MOVOL:460V) + CAPPRE:ULCUL + CAPPRM:ASME + FREQ:60HZ) + IDRY:N + MODEL:GA90VP_16

Ref	Part Number	Qty	Name	Validity	EL
	0697 9811 10	1	PLUG	**(12/12/2018 - 24/02/2019)** **(25/02/2019 - 05/12/2019)** ((((CAPPRM:AS1210 , CAPPRM:CE , CAPPRM:MHLW , CAPPRM:MOM) + MOVOL:400V , CAPPRM:CE + MOVOL:500V , CAPPRM:MHLW + MOVOL:200V) + FREQ:50HZ , ((MOVOL:200V , MOVOL:460V) + CAPPRM:MHLW , (MOVOL:380V , MOVOL:460V) + CAPPRM:ASME) + FREQ:60HZ) + CAPPRE:IEC , (MOVOL:230V , MOVOL:460V , MOVOL:575V) + CAPPRE:ULCUL + CAPPRM:ASME + FREQ:60HZ) + COOL:AIR **(06/12/2019 - 16/12/2019)** ((((CAPPRM:AS1210 , CAPPRM:CE , CAPPRM:MHLW , CAPPRM:MOM) + MOVOL:400V , CAPPRM:MHLW + MOVOL:200V) + FREQ:50HZ , ((MOVOL:200V , MOVOL:460V) + CAPPRM:MHLW , (MOVOL:380V , MOVOL:460V) + CAPPRM:ASME) + FREQ:60HZ) + CAPPRE:IEC , (MOVOL:230V , MOVOL:460V , MOVOL:575V) + CAPPRE:ULCUL + CAPPRM:ASME + FREQ:60HZ) + COOL:AIR	
	Electrical legend:	Plug for smartbox hole			
	0989 3700 41	1	LOCKNUT	**(12/12/2018 - 24/02/2019)** **(25/02/2019 - 05/12/2019)** ((((CAPPRM:AS1210 , CAPPRM:CE , CAPPRM:MHLW , CAPPRM:MOM) + MOVOL:400V , CAPPRM:CE + MOVOL:500V , CAPPRM:MHLW + MOVOL:200V) + FREQ:50HZ , ((MOVOL:200V , MOVOL:460V) + CAPPRM:MHLW , (MOVOL:380V , MOVOL:460V) + CAPPRM:ASME) + FREQ:60HZ) + CAPPRE:IEC , (MOVOL:230V , MOVOL:460V , MOVOL:575V) + CAPPRE:ULCUL + CAPPRM:ASME + FREQ:60HZ) + COOL:AIR **(06/12/2019 - 16/12/2019)** ((((CAPPRM:AS1210 , CAPPRM:CE , CAPPRM:MHLW , CAPPRM:MOM) + MOVOL:400V , CAPPRM:MHLW + MOVOL:200V) + FREQ:50HZ , ((MOVOL:200V , MOVOL:460V) + CAPPRM:MHLW , (MOVOL:380V , MOVOL:460V) + CAPPRM:ASME) + FREQ:60HZ) + CAPPRE:IEC , (MOVOL:230V , MOVOL:460V , MOVOL:575V) + CAPPRE:ULCUL + CAPPRM:ASME + FREQ:60HZ) + COOL:AIR	
	Electrical legend:	Nut for smartbox hole			

Legend:

CAPPRE:IEC - Component approval electrical:IEC
CAPPRM:ASME - Component approval mechanical:ASME
CAPPRM:MOM - Component approval mechanical:MOM
FREQ:60HZ - Frequency:60 Hz
MOVOL:200V - Supply voltage:200 V
MOVOL:400V - Supply voltage:400 V
MOVOL:575V - Supply voltage:575 V
CAPPRE:ULCUL - Component approval electrical:UL/cUL
CAPPRM:CE - Component approval mechanical:CE
COOL:AIR - Cooling:Air cooled
IDRY:N - Integrated dryer:No
MOVOL:230V - Supply voltage:230 V
MOVOL:460V - Supply voltage:460 V
CAPPRM:AS1210 - Component approval mechanical:AS1210
CAPPRM:MHLW - Component approval mechanical:MHLW
FREQ:50HZ - Frequency:50 Hz
MODEL:GA90VP_16 - Model:GA 90VSD+
MOVOL:380V - Supply voltage:380 V
MOVOL:500V - Supply voltage:500 V

21.16 - Cubicle components GA 90 VSD+ - (200V-380V-460V/60Hz - IEC, 230V-460V-575V/60Hz - UL-cUL, 200V-400V-500V/50Hz - IEC) - Pack (17/12/2019 - ...)

((((CAPPRM:AS1210 , CAPPRM:CE , CAPPRM:MHLW , CAPPRM:MOM) + MOVOL:400V , CAPPRM:CE + COOL:AIR + MOVOL:500V) + FREQ:50HZ , ((MOVOL:380V , MOVOL:460V) + CAPPRM:ASME , CAPPRM:MHLW + MOVOL:460V) + FREQ:60HZ , CAPPRM:MHLW + COOL:AIR + MOVOL:200V) + CAPPRE:IEC , ((MOVOL:230V , MOVOL:575V) + COOL:AIR , MOVOL:460V) + CAPPRE:ULCUL + CAPPRM:ASME + FREQ:60HZ) + IDRY:N + MODEL:GA90VP_16

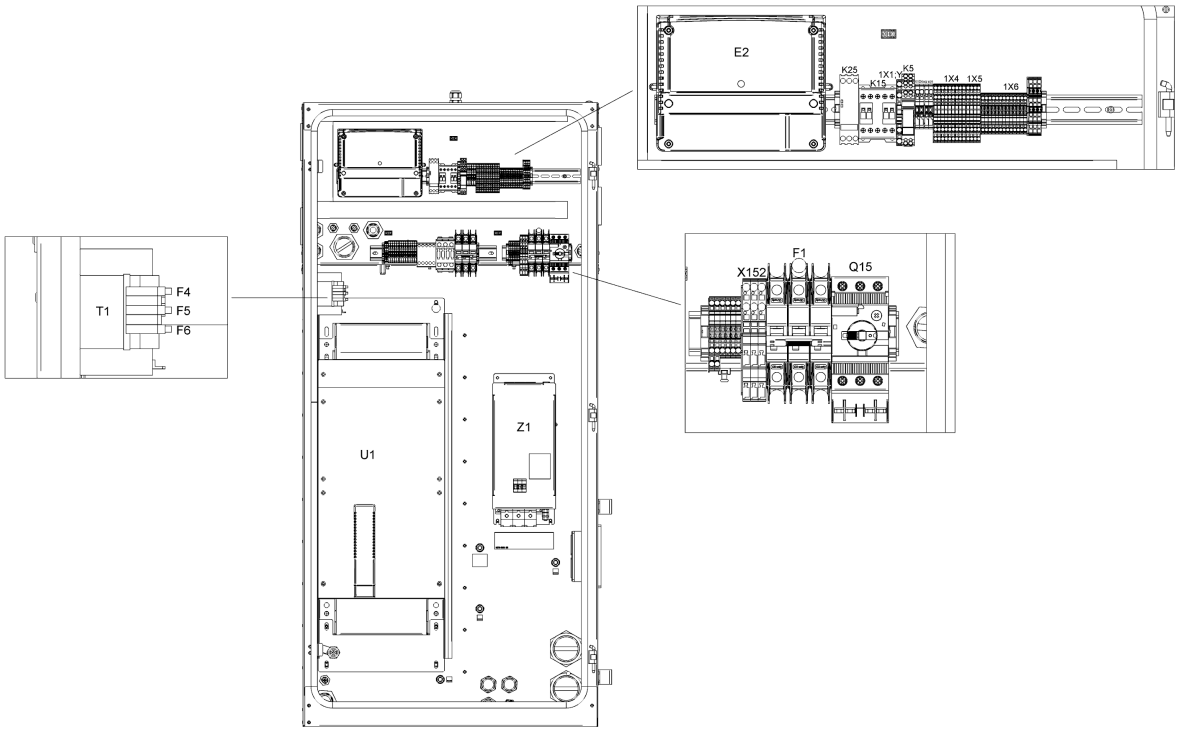

21.16 - Cubicle components GA 90 VSD+ - (200V-380V-460V/60Hz - IEC, 230V-460V-575V/60Hz - UL-cUL, 200V-400V-500V/50Hz - IEC) - Pack (17/12/2019 - ...)

((((CAPPRM:AS1210 , CAPPRM:CE , CAPPRM:MHLW , CAPPRM:MOM) + MOVOL:400V , CAPPRM:CE + COOL:AIR + MOVOL:500V) + FREQ:50HZ , ((MOVOL:380V , MOVOL:460V) + CAPPRM:ASME , CAPPRM:MHLW + MOVOL:460V) + FREQ:60HZ , CAPPRM:MHLW + COOL:AIR + MOVOL:200V) + CAPPRE:IEC , ((MOVOL:230V , MOVOL:575V) + COOL:AIR , MOVOL:460V) + CAPPRE:ULCUL + CAPPRM:ASME + FREQ:60HZ) + IDRY:N + MODEL:GA90VP_16

Ref	Part Number	Qty	Name	Validity	EL
	1900 2202 46	1	CUBICLE	**(17/12/2019 - ...)**	
	9820 3000 31	1	ASSEMBLY DRAWING	**(25/02/2019 - 05/12/2019)** ((((MOVOL:380V , MOVOL:460V) + CAPPRM:ASME , CAPPRM:MHLW + MOVOL:460V) + FREQ:60HZ , (CAPPRM:AS1210 , CAPPRM:CE , CAPPRM:MHLW , CAPPRM:MOM) + FREQ:50HZ + MOVOL:400V) + CAPPRE:IEC , CAPPRE:ULCUL + CAPPRM:ASME + FREQ:60HZ + MOVOL:460V) + COOL:WATER **(06/12/2019 - 16/12/2019)** (((((MOVOL:380V , MOVOL:460V) + CAPPRM:ASME , CAPPRM:MHLW + MOVOL:460V) + FREQ:60HZ , (CAPPRM:AS1210 , CAPPRM:CE , CAPPRM:MHLW , CAPPRM:MOM) + FREQ:50HZ + MOVOL:400V) + COOL:WATER , CAPPRM:CE + COOL:AIR + FREQ:50HZ + MOVOL:500V) + CAPPRE:IEC , CAPPRE:ULCUL + CAPPRM:ASME + COOL:WATER + FREQ:60HZ + MOVOL:460V) **(17/12/2019 - ...)**	AD
	9820 3000 27	1	SERVICE DIAGRAM	**(25/02/2019 - 05/12/2019)** ((((MOVOL:380V , MOVOL:460V) + CAPPRM:ASME , CAPPRM:MHLW + MOVOL:460V) + FREQ:60HZ , (CAPPRM:AS1210 , CAPPRM:CE , CAPPRM:MHLW , CAPPRM:MOM) + FREQ:50HZ + MOVOL:400V) + CAPPRE:IEC , CAPPRE:ULCUL + CAPPRM:ASME + FREQ:60HZ + MOVOL:460V) + COOL:WATER **(06/12/2019 - 16/12/2019)** (((((MOVOL:380V , MOVOL:460V) + CAPPRM:ASME , CAPPRM:MHLW + MOVOL:460V) + FREQ:60HZ , (CAPPRM:AS1210 , CAPPRM:CE , CAPPRM:MHLW , CAPPRM:MOM) + FREQ:50HZ + MOVOL:400V) + COOL:WATER , CAPPRM:CE + COOL:AIR + FREQ:50HZ + MOVOL:500V) + CAPPRE:IEC , CAPPRE:ULCUL + CAPPRM:ASME + COOL:WATER + FREQ:60HZ + MOVOL:460V) **(17/12/2019 - ...)**	SD
	1622 3798 72	1	WIRE HARNESS	**(25/02/2019 - 05/12/2019)** ((((MOVOL:380V , MOVOL:460V) + CAPPRM:ASME , CAPPRM:MHLW + MOVOL:460V) + FREQ:60HZ , (CAPPRM:AS1210 , CAPPRM:CE , CAPPRM:MHLW , CAPPRM:MOM) + FREQ:50HZ + MOVOL:400V) + CAPPRE:IEC , CAPPRE:ULCUL + CAPPRM:ASME + FREQ:60HZ + MOVOL:460V) + COOL:WATER **(06/12/2019 - 16/12/2019)** (((((MOVOL:380V , MOVOL:460V) + CAPPRM:ASME , CAPPRM:MHLW + MOVOL:460V) + FREQ:60HZ , (CAPPRM:AS1210 , CAPPRM:CE , CAPPRM:MHLW , CAPPRM:MOM) + FREQ:50HZ + MOVOL:400V) + COOL:WATER , CAPPRM:CE + COOL:AIR + FREQ:50HZ + MOVOL:500V) + CAPPRE:IEC , CAPPRE:ULCUL + CAPPRM:ASME + COOL:WATER + FREQ:60HZ + MOVOL:460V) **(17/12/2019 - ...)**	Comm Cable

Legend:

CAPPRE:IEC - Component approval electrical:IEC
CAPPRE:ULCUL - Component approval electrical:UL/cUL
CAPPRM:AS1210 - Component approval mechanical:AS1210
CAPPRM:ASME - Component approval mechanical:ASME
CAPPRM:CE - Component approval mechanical:CE
CAPPRM:MHLW - Component approval mechanical:MHLW
CAPPRM:MOM - Component approval mechanical:MOM
COOL:AIR - Cooling:Air cooled
COOL:WATER - Cooling:Water cooled
FREQ:50HZ - Frequency:50 Hz
FREQ:60HZ - Frequency:60 Hz
IDRY:N - Integrated dryer:No
MODEL:GA90VP_16 - Model:GA 90VSD+
MOVOL:200V - Supply voltage:200 V
MOVOL:230V - Supply voltage:230 V
MOVOL:380V - Supply voltage:380 V
MOVOL:400V - Supply voltage:400 V
MOVOL:460V - Supply voltage:460 V
MOVOL:500V - Supply voltage:500 V
MOVOL:575V - Supply voltage:575 V

21.16 - Cubicle components GA 90 VSD+ - (200V-380V-460V/60Hz - IEC, 230V-460V-575V/60Hz - UL-cUL, 200V-400V-500V/50Hz - IEC) - Pack (17/12/2019 - ...)

((((CAPPRM:AS1210 , CAPPRM:CE , CAPPRM:MHLW , CAPPRM:MOM) + MOVOL:400V , CAPPRM:CE + COOL:AIR + MOVOL:500V) + FREQ:50HZ , ((MOVOL:380V , MOVOL:460V) + CAPPRM:ASME , CAPPRM:MHLW + MOVOL:460V) + FREQ:60HZ , CAPPRM:MHLW + COOL:AIR + MOVOL:200V) + CAPPRE:IEC , ((MOVOL:230V , MOVOL:575V) + COOL:AIR , MOVOL:460V) + CAPPRE:ULCUL + CAPPRM:ASME + FREQ:60HZ) + IDRY:N + MODEL:GA90VP_16

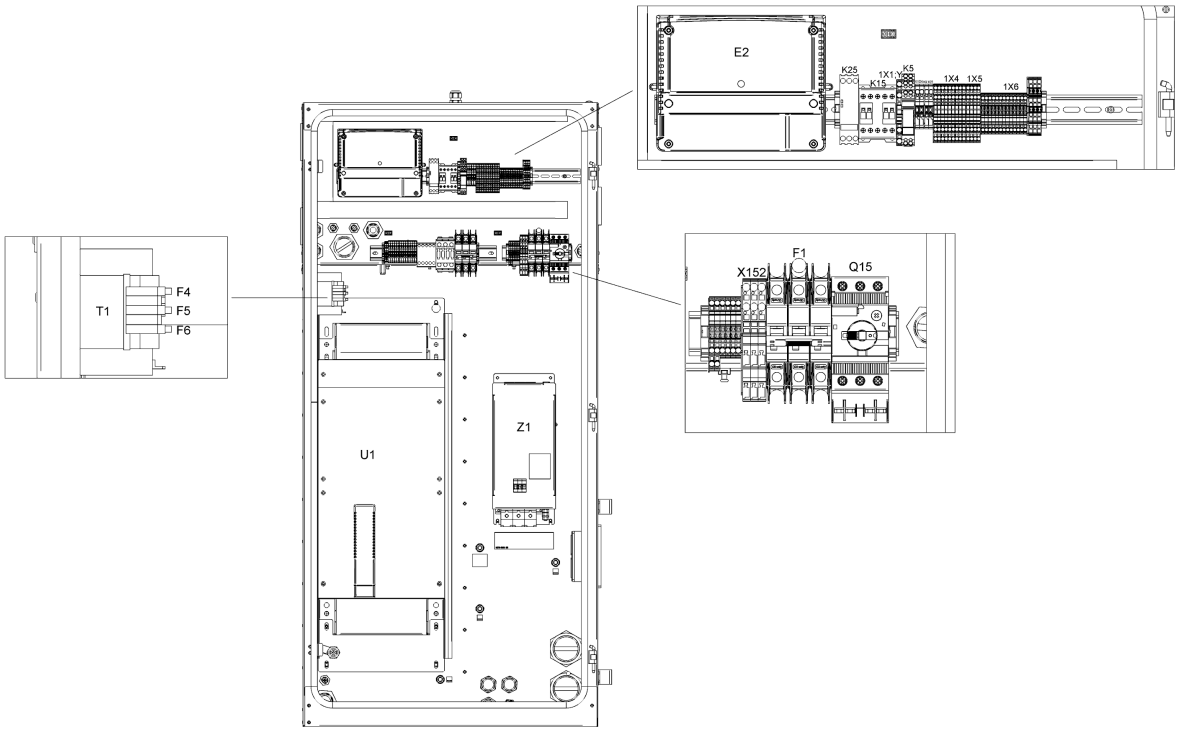

21.16 - Cubicle components GA 90 VSD+ - (200V-380V-460V/60Hz - IEC, 230V-460V-575V/60Hz - UL-cUL, 200V-400V-500V/50Hz - IEC) - Pack (17/12/2019 - ...)

((((CAPPRM:AS1210 , CAPPRM:CE , CAPPRM:MHLW , CAPPRM:MOM) + MOVOL:400V , CAPPRM:CE + COOL:AIR + MOVOL:500V) + FREQ:50HZ , ((MOVOL:380V , MOVOL:460V) + CAPPRM:ASME , CAPPRM:MHLW + MOVOL:460V) + FREQ:60HZ , CAPPRM:MHLW + COOL:AIR + MOVOL:200V) + CAPPRE:IEC , ((MOVOL:230V , MOVOL:575V) + COOL:AIR , MOVOL:460V) + CAPPRE:ULCUL + CAPPRM:ASME + FREQ:60HZ) + IDRY:N + MODEL:GA90VP_16

Ref	Part Number	Qty	Name	Validity	EL
	1622 5099 04	1	DI CHANE CABLE (1400MM)	**(25/02/2019 - 05/12/2019)** ((((MOVOL:380V , MOVOL:460V) + CAPPRM:ASME , CAPPRM:MHLW + MOVOL:460V) + FREQ:60HZ , (CAPPRM:AS1210 , CAPPRM:CE , CAPPRM:MHLW , CAPPRM:MOM) + FREQ:50HZ + MOVOL:400V) + CAPPRE:IEC , CAPPRE:ULCUL + CAPPRM:ASME + FREQ:60HZ + MOVOL:460V) + COOL:WATER **(06/12/2019 - 16/12/2019)** (((((MOVOL:380V , MOVOL:460V) + CAPPRM:ASME , CAPPRM:MHLW + MOVOL:460V) + FREQ:60HZ , (CAPPRM:AS1210 , CAPPRM:CE , CAPPRM:MHLW , CAPPRM:MOM) + FREQ:50HZ + MOVOL:400V) + COOL:WATER , CAPPRM:CE + COOL:AIR + FREQ:50HZ + MOVOL:500V) + CAPPRE:IEC , CAPPRE:ULCUL + CAPPRM:ASME + COOL:WATER + FREQ:60HZ + MOVOL:460V) **(17/12/2019 - ...)**	
	Electrical legend:	Comm Cable Loose supply			
	1649 8006 00	1	CUBICLE	**(25/02/2019 - 05/12/2019)** ((((MOVOL:380V , MOVOL:460V) + CAPPRM:ASME , CAPPRM:MHLW + MOVOL:460V) + FREQ:60HZ , (CAPPRM:AS1210 , CAPPRM:CE , CAPPRM:MHLW , CAPPRM:MOM) + FREQ:50HZ + MOVOL:400V) + CAPPRE:IEC , CAPPRE:ULCUL + CAPPRM:ASME + FREQ:60HZ + MOVOL:460V) + COOL:WATER **(06/12/2019 - 16/12/2019)** (((((MOVOL:380V , MOVOL:460V) + CAPPRM:ASME , CAPPRM:MHLW + MOVOL:460V) + FREQ:60HZ , (CAPPRM:AS1210 , CAPPRM:CE , CAPPRM:MHLW , CAPPRM:MOM) + FREQ:50HZ + MOVOL:400V) + COOL:WATER , CAPPRM:CE + COOL:AIR + FREQ:50HZ + MOVOL:500V) + CAPPRE:IEC , CAPPRE:ULCUL + CAPPRM:ASME + COOL:WATER + FREQ:60HZ + MOVOL:460V) **(17/12/2019 - ...)**	MSA
	1649 8001 32	1	PLATE NEOS "D"	**(25/02/2019 - 05/12/2019)** ((((MOVOL:380V , MOVOL:460V) + CAPPRM:ASME , CAPPRM:MHLW + MOVOL:460V) + FREQ:60HZ , (CAPPRM:AS1210 , CAPPRM:CE , CAPPRM:MHLW , CAPPRM:MOM) + FREQ:50HZ + MOVOL:400V) + CAPPRE:IEC , CAPPRE:ULCUL + CAPPRM:ASME + FREQ:60HZ + MOVOL:460V) + COOL:WATER **(06/12/2019 - 16/12/2019)** (((((MOVOL:380V , MOVOL:460V) + CAPPRM:ASME , CAPPRM:MHLW + MOVOL:460V) + FREQ:60HZ , (CAPPRM:AS1210 , CAPPRM:CE , CAPPRM:MHLW , CAPPRM:MOM) + FREQ:50HZ + MOVOL:400V) + COOL:WATER , CAPPRM:CE + COOL:AIR + FREQ:50HZ + MOVOL:500V) + CAPPRE:IEC , CAPPRE:ULCUL + CAPPRM:ASME + COOL:WATER + FREQ:60HZ + MOVOL:460V) **(17/12/2019 - ...)**	
	Electrical legend:	Mounting plate			

Legend:

CAPPRE:IEC - Component approval electrical:IEC
CAPPRE:ULCUL - Component approval electrical:UL/cUL
CAPPRM:AS1210 - Component approval mechanical:AS1210
CAPPRM:ASME - Component approval mechanical:ASME
CAPPRM:CE - Component approval mechanical:CE
CAPPRM:MHLW - Component approval mechanical:MHLW
CAPPRM:MOM - Component approval mechanical:MOM
COOL:AIR - Cooling:Air cooled
COOL:WATER - Cooling:Water cooled
FREQ:50HZ - Frequency:50 Hz
FREQ:60HZ - Frequency:60 Hz
IDRY:N - Integrated dryer:No
MODEL:GA90VP_16 - Model:GA 90VSD+
MOVOL:200V - Supply voltage:200 V
MOVOL:230V - Supply voltage:230 V
MOVOL:380V - Supply voltage:380 V
MOVOL:400V - Supply voltage:400 V
MOVOL:460V - Supply voltage:460 V
MOVOL:500V - Supply voltage:500 V
MOVOL:575V - Supply voltage:575 V

21.16 - Cubicle components GA 90 VSD+ - (200V-380V-460V/60Hz - IEC, 230V-460V-575V/60Hz - UL-cUL, 200V-400V-500V/50Hz - IEC) - Pack (17/12/2019 - ...)

((((CAPPRM:AS1210 , CAPPRM:CE , CAPPRM:MHLW , CAPPRM:MOM) + MOVOL:400V , CAPPRM:CE + COOL:AIR + MOVOL:500V) + FREQ:50HZ , ((MOVOL:380V , MOVOL:460V) + CAPPRM:ASME , CAPPRM:MHLW + MOVOL:460V) + FREQ:60HZ , CAPPRM:MHLW + COOL:AIR + MOVOL:200V) + CAPPRE:IEC , ((MOVOL:230V , MOVOL:575V) + COOL:AIR , MOVOL:460V) + CAPPRE:ULCUL + CAPPRM:ASME + FREQ:60HZ) + IDRY:N + MODEL:GA90VP_16

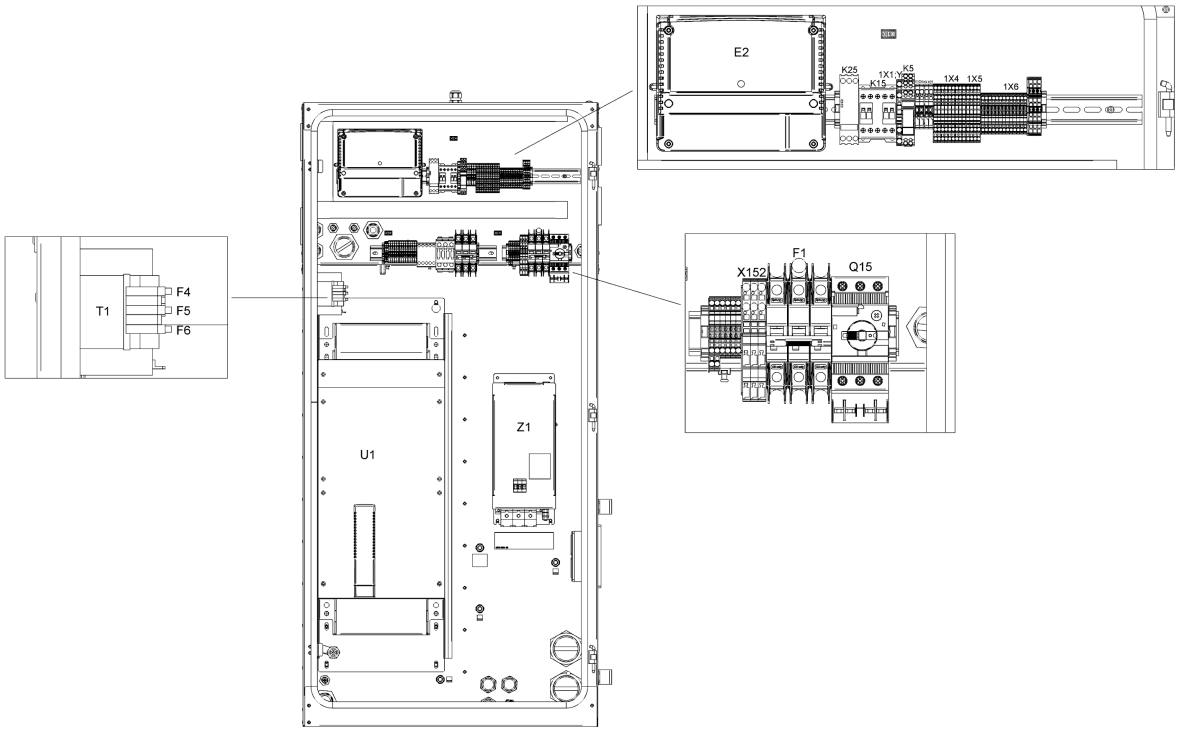

21.16 - Cubicle components GA 90 VSD+ - (200V-380V-460V/60Hz - IEC, 230V-460V-575V/60Hz - UL-cUL, 200V-400V-500V/50Hz - IEC) - Pack (17/12/2019 - ...)

((((CAPPRM:AS1210 , CAPPRM:CE , CAPPRM:MHLW , CAPPRM:MOM) + MOVOL:400V , CAPPRM:CE + COOL:AIR + MOVOL:500V) + FREQ:50HZ , ((MOVOL:380V , MOVOL:460V) + CAPPRM:ASME , CAPPRM:MHLW + MOVOL:460V) + FREQ:60HZ , CAPPRM:MHLW + COOL:AIR + MOVOL:200V) + CAPPRE:IEC , ((MOVOL:230V , MOVOL:575V) + COOL:AIR , MOVOL:460V) + CAPPRE:ULCUL + CAPPRM:ASME + FREQ:60HZ) + IDRY:N + MODEL:GA90VP_16

Ref	Part Number	Qty	Name	Validity	EL
	1649 8003 85	1	MOUNTING PLATE	**(25/02/2019 - 05/12/2019)** ((((MOVOL:380V , MOVOL:460V) + CAPPRM:ASME , CAPPRM:MHLW + MOVOL:460V) + FREQ:60HZ , (CAPPRM:AS1210 , CAPPRM:CE , CAPPRM:MHLW , CAPPRM:MOM) + FREQ:50HZ + MOVOL:400V) + CAPPRE:IEC , CAPPRE:ULCUL + CAPPRM:ASME + FREQ:60HZ + MOVOL:460V) + COOL:WATER **(06/12/2019 - 16/12/2019)** (((((MOVOL:380V , MOVOL:460V) + CAPPRM:ASME , CAPPRM:MHLW + MOVOL:460V) + FREQ:60HZ , (CAPPRM:AS1210 , CAPPRM:CE , CAPPRM:MHLW , CAPPRM:MOM) + FREQ:50HZ + MOVOL:400V) + COOL:WATER , CAPPRM:CE + COOL:AIR + FREQ:50HZ + MOVOL:500V) + CAPPRE:IEC , CAPPRE:ULCUL + CAPPRM:ASME + COOL:WATER + FREQ:60HZ + MOVOL:460V) **(17/12/2019 - ...)**	
	Electrical legend:	Mounting plate			
	1649 8002 39	1	WIRE HARNESS	**(25/02/2019 - 05/12/2019)** ((((MOVOL:380V , MOVOL:460V) + CAPPRM:ASME , CAPPRM:MHLW + MOVOL:460V) + FREQ:60HZ , (CAPPRM:AS1210 , CAPPRM:CE , CAPPRM:MHLW , CAPPRM:MOM) + FREQ:50HZ + MOVOL:400V) + CAPPRE:IEC , CAPPRE:ULCUL + CAPPRM:ASME + FREQ:60HZ + MOVOL:460V) + COOL:WATER **(06/12/2019 - 16/12/2019)** (((((MOVOL:380V , MOVOL:460V) + CAPPRM:ASME , CAPPRM:MHLW + MOVOL:460V) + FREQ:60HZ , (CAPPRM:AS1210 , CAPPRM:CE , CAPPRM:MHLW , CAPPRM:MOM) + FREQ:50HZ + MOVOL:400V) + COOL:WATER , CAPPRM:CE + COOL:AIR + FREQ:50HZ + MOVOL:500V) + CAPPRE:IEC , CAPPRE:ULCUL + CAPPRM:ASME + COOL:WATER + FREQ:60HZ + MOVOL:460V) **(17/12/2019 - ...)**	WH
	1649 8002 40	1	WIRE HARNESS	**(25/02/2019 - 05/12/2019)** ((((MOVOL:380V , MOVOL:460V) + CAPPRM:ASME , CAPPRM:MHLW + MOVOL:460V) + FREQ:60HZ , (CAPPRM:AS1210 , CAPPRM:CE , CAPPRM:MHLW , CAPPRM:MOM) + FREQ:50HZ + MOVOL:400V) + CAPPRE:IEC , CAPPRE:ULCUL + CAPPRM:ASME + FREQ:60HZ + MOVOL:460V) + COOL:WATER **(06/12/2019 - 16/12/2019)** (((((MOVOL:380V , MOVOL:460V) + CAPPRM:ASME , CAPPRM:MHLW + MOVOL:460V) + FREQ:60HZ , (CAPPRM:AS1210 , CAPPRM:CE , CAPPRM:MHLW , CAPPRM:MOM) + FREQ:50HZ + MOVOL:400V) + COOL:WATER , CAPPRM:CE + COOL:AIR + FREQ:50HZ + MOVOL:500V) + CAPPRE:IEC , CAPPRE:ULCUL + CAPPRM:ASME + COOL:WATER + FREQ:60HZ + MOVOL:460V) **(17/12/2019 - ...)**	WH
•	1089 0574 87	1	TEMPERATURE SENSOR PT1000		

Legend:

CAPPRE:IEC - Component approval electrical:IEC
CAPPRE:ULCUL - Component approval electrical:UL/cUL
CAPPRM:AS1210 - Component approval mechanical:AS1210
CAPPRM:ASME - Component approval mechanical:ASME
CAPPRM:CE - Component approval mechanical:CE
CAPPRM:MHLW - Component approval mechanical:MHLW
CAPPRM:MOM - Component approval mechanical:MOM
COOL:AIR - Cooling:Air cooled
COOL:WATER - Cooling:Water cooled
FREQ:50HZ - Frequency:50 Hz
FREQ:60HZ - Frequency:60 Hz
IDRY:N - Integrated dryer:No
MODEL:GA90VP_16 - Model:GA 90VSD+
MOVOL:200V - Supply voltage:200 V
MOVOL:230V - Supply voltage:230 V
MOVOL:380V - Supply voltage:380 V
MOVOL:400V - Supply voltage:400 V
MOVOL:460V - Supply voltage:460 V
MOVOL:500V - Supply voltage:500 V
MOVOL:575V - Supply voltage:575 V

21.16 - Cubicle components GA 90 VSD+ - (200V-380V-460V/60Hz - IEC, 230V-460V-575V/60Hz - UL-cUL, 200V-400V-500V/50Hz - IEC) - Pack (17/12/2019 - ...)

((((CAPPRM:AS1210 , CAPPRM:CE , CAPPRM:MHLW , CAPPRM:MOM) + MOVOL:400V , CAPPRM:CE + COOL:AIR + MOVOL:500V) + FREQ:50HZ , ((MOVOL:380V , MOVOL:460V) + CAPPRM:ASME , CAPPRM:MHLW + MOVOL:460V) + FREQ:60HZ , CAPPRM:MHLW + COOL:AIR + MOVOL:200V) + CAPPRE:IEC , ((MOVOL:230V , MOVOL:575V) + COOL:AIR , MOVOL:460V) + CAPPRE:ULCUL + CAPPRM:ASME + FREQ:60HZ) + IDRY:N + MODEL:GA90VP_16

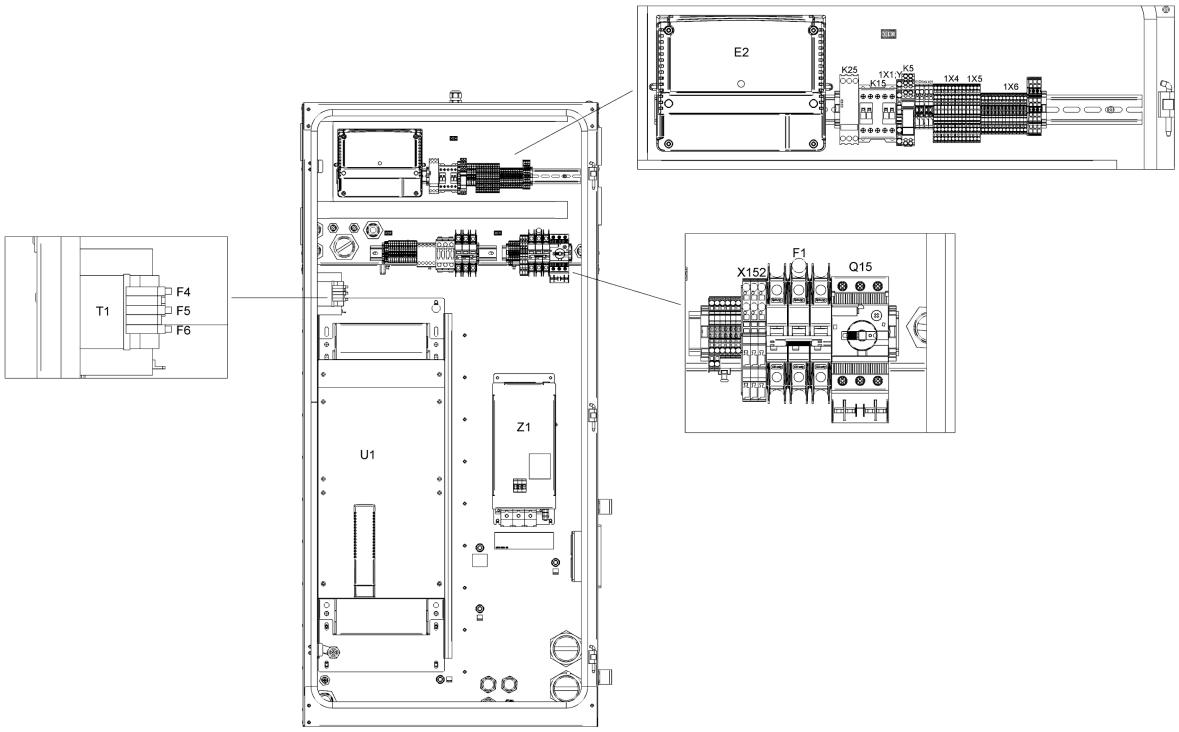

Ref	Part Number	Qty	Name	Validity	EL
	1649 8002 73	1	WIRE HARNESS	**(25/02/2019 - 05/12/2019)** ((((MOVOL:380V , MOVOL:460V) + CAPPRM:ASME , CAPPRM:MHLW + MOVOL:460V) + FREQ:60HZ , (CAPPRM:AS1210 , CAPPRM:CE , CAPPRM:MHLW , CAPPRM:MOM) + FREQ:50HZ + MOVOL:400V) + CAPPRE:IEC , CAPPRE:ULCUL + CAPPRM:ASME + FREQ:60HZ + MOVOL:460V) + COOL:WATER **(06/12/2019 - 16/12/2019)** (((((MOVOL:380V , MOVOL:460V) + CAPPRM:ASME , CAPPRM:MHLW + MOVOL:460V) + FREQ:60HZ , (CAPPRM:AS1210 , CAPPRM:CE , CAPPRM:MHLW , CAPPRM:MOM) + FREQ:50HZ + MOVOL:400V) + COOL:WATER , CAPPRM:CE + COOL:AIR + FREQ:50HZ + MOVOL:500V) + CAPPRE:IEC , CAPPRE:ULCUL + CAPPRM:ASME + COOL:WATER + FREQ:60HZ + MOVOL:460V) **(17/12/2019 - ...)**	
	Electrical legend:	Pack Drain + Air filter switch			
	1649 8002 75	1	WIRE HARNESS	**(25/02/2019 - 05/12/2019)** ((((MOVOL:380V , MOVOL:460V) + CAPPRM:ASME , CAPPRM:MHLW + MOVOL:460V) + FREQ:60HZ , (CAPPRM:AS1210 , CAPPRM:CE , CAPPRM:MHLW , CAPPRM:MOM) + FREQ:50HZ + MOVOL:400V) + CAPPRE:IEC , CAPPRE:ULCUL + CAPPRM:ASME + FREQ:60HZ + MOVOL:460V) + COOL:WATER **(06/12/2019 - 16/12/2019)** (((((MOVOL:380V , MOVOL:460V) + CAPPRM:ASME , CAPPRM:MHLW + MOVOL:460V) + FREQ:60HZ , (CAPPRM:AS1210 , CAPPRM:CE , CAPPRM:MHLW , CAPPRM:MOM) + FREQ:50HZ + MOVOL:400V) + COOL:WATER , CAPPRM:CE + COOL:AIR + FREQ:50HZ + MOVOL:500V) + CAPPRE:IEC , CAPPRE:ULCUL + CAPPRM:ASME + COOL:WATER + FREQ:60HZ + MOVOL:460V) **(17/12/2019 - ...)**	
	Electrical legend:	Relative Humidity sensor			
•	1089 9320 10	1	TEMPERATURE SENSOR	**(17/12/2019 - ...)** **(06/12/2019 - 16/12/2019)** (((((MOVOL:380V , MOVOL:460V) + CAPPRM:ASME , CAPPRM:MHLW + MOVOL:460V) + FREQ:60HZ , (CAPPRM:AS1210 , CAPPRM:CE , CAPPRM:MHLW , CAPPRM:MOM) + FREQ:50HZ + MOVOL:400V) + COOL:WATER , CAPPRM:CE + COOL:AIR + FREQ:50HZ + MOVOL:500V) + CAPPRE:IEC , CAPPRE:ULCUL + CAPPRM:ASME + COOL:WATER + FREQ:60HZ + MOVOL:460V) **(22/07/2019 - 05/12/2019)** ((((MOVOL:380V , MOVOL:460V) + CAPPRM:ASME , CAPPRM:MHLW + MOVOL:460V) + FREQ:60HZ , (CAPPRM:AS1210 , CAPPRM:CE , CAPPRM:MHLW , CAPPRM:MOM) + FREQ:50HZ + MOVOL:400V) + CAPPRE:IEC , CAPPRE:ULCUL + CAPPRM:ASME + FREQ:60HZ + MOVOL:460V) + COOL:WATER	
•	~~1089 9320 09~~	1	RH SENSOR	**(25/02/2019 - 21/07/2019)** ((((MOVOL:380V , MOVOL:460V) + CAPPRM:ASME , CAPPRM:MHLW + MOVOL:460V) + FREQ:60HZ , (CAPPRM:AS1210 , CAPPRM:CE , CAPPRM:MHLW , CAPPRM:MOM) + FREQ:50HZ + MOVOL:400V) + CAPPRE:IEC , CAPPRE:ULCUL + CAPPRM:ASME + FREQ:60HZ + MOVOL:460V) + COOL:WATER	
	Substituted by:	1089 9320 10 - TEMP. SENSOR (quantity: 1)			

Legend:

CAPPRE:IEC - Component approval electrical:IEC
CAPPRE:ULCUL - Component approval electrical:UL/cUL
CAPPRM:AS1210 - Component approval mechanical:AS1210
CAPPRM:ASME - Component approval mechanical:ASME
CAPPRM:CE - Component approval mechanical:CE
CAPPRM:MHLW - Component approval mechanical:MHLW
CAPPRM:MOM - Component approval mechanical:MOM
COOL:AIR - Cooling:Air cooled
COOL:WATER - Cooling:Water cooled
FREQ:50HZ - Frequency:50 Hz
FREQ:60HZ - Frequency:60 Hz
IDRY:N - Integrated dryer:No
MODEL:GA90VP_16 - Model:GA 90VSD+
MOVOL:200V - Supply voltage:200 V
MOVOL:230V - Supply voltage:230 V
MOVOL:380V - Supply voltage:380 V
MOVOL:400V - Supply voltage:400 V
MOVOL:460V - Supply voltage:460 V
MOVOL:500V - Supply voltage:500 V
MOVOL:575V - Supply voltage:575 V

21.16 - Cubicle components GA 90 VSD+ - (200V-380V-460V/60Hz - IEC, 230V-460V-575V/60Hz - UL-cUL, 200V-400V-500V/50Hz - IEC) - Pack (17/12/2019 - ...)

((((CAPPRM:AS1210 , CAPPRM:CE , CAPPRM:MHLW , CAPPRM:MOM) + MOVOL:400V , CAPPRM:CE + COOL:AIR + MOVOL:500V) + FREQ:50HZ , ((MOVOL:380V , MOVOL:460V) + CAPPRM:ASME , CAPPRM:MHLW + MOVOL:460V) + FREQ:60HZ , CAPPRM:MHLW + COOL:AIR + MOVOL:200V) + CAPPRE:IEC , ((MOVOL:230V , MOVOL:575V) + COOL:AIR , MOVOL:460V) + CAPPRE:ULCUL + CAPPRM:ASME + FREQ:60HZ) + IDRY:N + MODEL:GA90VP_16

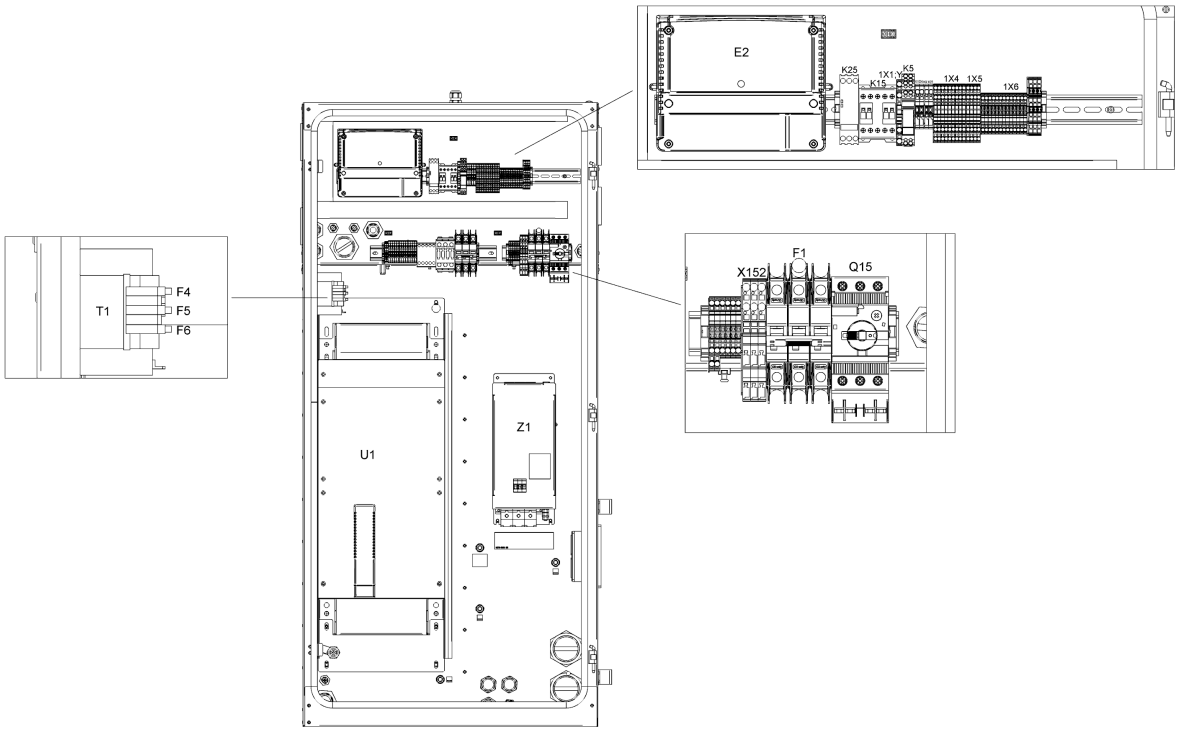

21.16 - Cubicle components GA 90 VSD+ - (200V-380V-460V/60Hz - IEC, 230V-460V-575V/60Hz - UL-cUL, 200V-400V-500V/50Hz - IEC) - Pack (17/12/2019 - ...)

((((CAPPRM:AS1210 , CAPPRM:CE , CAPPRM:MHLW , CAPPRM:MOM) + MOVOL:400V , CAPPRM:CE + COOL:AIR + MOVOL:500V) + FREQ:50HZ , ((MOVOL:380V , MOVOL:460V) + CAPPRM:ASME , CAPPRM:MHLW + MOVOL:460V) + FREQ:60HZ , CAPPRM:MHLW + COOL:AIR + MOVOL:200V) + CAPPRE:IEC , ((MOVOL:230V , MOVOL:575V) + COOL:AIR , MOVOL:460V) + CAPPRE:ULCUL + CAPPRM:ASME + FREQ:60HZ) + IDRY:N + MODEL:GA90VP_16

Ref	Part Number	Qty	Name	Validity	EL
	1649 8001 44	3	MOTOR CABLE	**(25/02/2019 - 05/12/2019)** ((((MOVOL:380V , MOVOL:460V) + CAPPRM:ASME , CAPPRM:MHLW + MOVOL:460V) + FREQ:60HZ , (CAPPRM:AS1210 , CAPPRM:CE , CAPPRM:MHLW , CAPPRM:MOM) + FREQ:50HZ + MOVOL:400V) + CAPPRE:IEC , CAPPRE:ULCUL + CAPPRM:ASME + FREQ:60HZ + MOVOL:460V) + COOL:WATER **(06/12/2019 - 16/12/2019)** (((((MOVOL:380V , MOVOL:460V) + CAPPRM:ASME , CAPPRM:MHLW + MOVOL:460V) + FREQ:60HZ , (CAPPRM:AS1210 , CAPPRM:CE , CAPPRM:MHLW , CAPPRM:MOM) + FREQ:50HZ + MOVOL:400V) + COOL:WATER , CAPPRM:CE + COOL:AIR + FREQ:50HZ + MOVOL:500V) + CAPPRE:IEC , CAPPRE:ULCUL + CAPPRM:ASME + COOL:WATER + FREQ:60HZ + MOVOL:460V) **(17/12/2019 - ...)**	
	Electrical legend:	Motor conduit			
	1649 8001 47	1	MOTOR CABLE	**(25/02/2019 - 05/12/2019)** ((((MOVOL:380V , MOVOL:460V) + CAPPRM:ASME , CAPPRM:MHLW + MOVOL:460V) + FREQ:60HZ , (CAPPRM:AS1210 , CAPPRM:CE , CAPPRM:MHLW , CAPPRM:MOM) + FREQ:50HZ + MOVOL:400V) + CAPPRE:IEC , CAPPRE:ULCUL + CAPPRM:ASME + FREQ:60HZ + MOVOL:460V) + COOL:WATER **(06/12/2019 - 16/12/2019)** (((((MOVOL:380V , MOVOL:460V) + CAPPRM:ASME , CAPPRM:MHLW + MOVOL:460V) + FREQ:60HZ , (CAPPRM:AS1210 , CAPPRM:CE , CAPPRM:MHLW , CAPPRM:MOM) + FREQ:50HZ + MOVOL:400V) + COOL:WATER , CAPPRM:CE + COOL:AIR + FREQ:50HZ + MOVOL:500V) + CAPPRE:IEC , CAPPRE:ULCUL + CAPPRM:ASME + COOL:WATER + FREQ:60HZ + MOVOL:460V) **(17/12/2019 - ...)**	
	Electrical legend:	Motor conduit			
	1625 3906 31	1	DATA LABEL	**(25/02/2019 - 05/12/2019)** ((((MOVOL:380V , MOVOL:460V) + CAPPRM:ASME , CAPPRM:MHLW + MOVOL:460V) + FREQ:60HZ , (CAPPRM:AS1210 , CAPPRM:CE , CAPPRM:MHLW , CAPPRM:MOM) + FREQ:50HZ + MOVOL:400V) + CAPPRE:IEC , CAPPRE:ULCUL + CAPPRM:ASME + FREQ:60HZ + MOVOL:460V) + COOL:WATER **(06/12/2019 - 16/12/2019)** (((((MOVOL:380V , MOVOL:460V) + CAPPRM:ASME , CAPPRM:MHLW + MOVOL:460V) + FREQ:60HZ , (CAPPRM:AS1210 , CAPPRM:CE , CAPPRM:MHLW , CAPPRM:MOM) + FREQ:50HZ + MOVOL:400V) + COOL:WATER , CAPPRM:CE + COOL:AIR + FREQ:50HZ + MOVOL:500V) + CAPPRE:IEC , CAPPRE:ULCUL + CAPPRM:ASME + COOL:WATER + FREQ:60HZ + MOVOL:460V) **(17/12/2019 - ...)**	Label

Legend:

CAPPRE:IEC - Component approval electrical:IEC
CAPPRE:ULCUL - Component approval electrical:UL/cUL
CAPPRM:AS1210 - Component approval mechanical:AS1210
CAPPRM:ASME - Component approval mechanical:ASME
CAPPRM:CE - Component approval mechanical:CE
CAPPRM:MHLW - Component approval mechanical:MHLW
CAPPRM:MOM - Component approval mechanical:MOM
COOL:AIR - Cooling:Air cooled
COOL:WATER - Cooling:Water cooled
FREQ:50HZ - Frequency:50 Hz
FREQ:60HZ - Frequency:60 Hz
IDRY:N - Integrated dryer:No
MODEL:GA90VP_16 - Model:GA 90VSD+
MOVOL:200V - Supply voltage:200 V
MOVOL:230V - Supply voltage:230 V
MOVOL:380V - Supply voltage:380 V
MOVOL:400V - Supply voltage:400 V
MOVOL:460V - Supply voltage:460 V
MOVOL:500V - Supply voltage:500 V
MOVOL:575V - Supply voltage:575 V

21.16 - Cubicle components GA 90 VSD+ - (200V-380V-460V/60Hz - IEC, 230V-460V-575V/60Hz - UL-cUL, 200V-400V-500V/50Hz - IEC) - Pack (17/12/2019 - ...)

((((CAPPRM:AS1210 , CAPPRM:CE , CAPPRM:MHLW , CAPPRM:MOM) + MOVOL:400V , CAPPRM:CE + COOL:AIR + MOVOL:500V) + FREQ:50HZ , ((MOVOL:380V , MOVOL:460V) + CAPPRM:ASME , CAPPRM:MHLW + MOVOL:460V) + FREQ:60HZ , CAPPRM:MHLW + COOL:AIR + MOVOL:200V) + CAPPRE:IEC , ((MOVOL:230V , MOVOL:575V) + COOL:AIR , MOVOL:460V) + CAPPRE:ULCUL + CAPPRM:ASME + FREQ:60HZ) + IDRY:N + MODEL:GA90VP_16

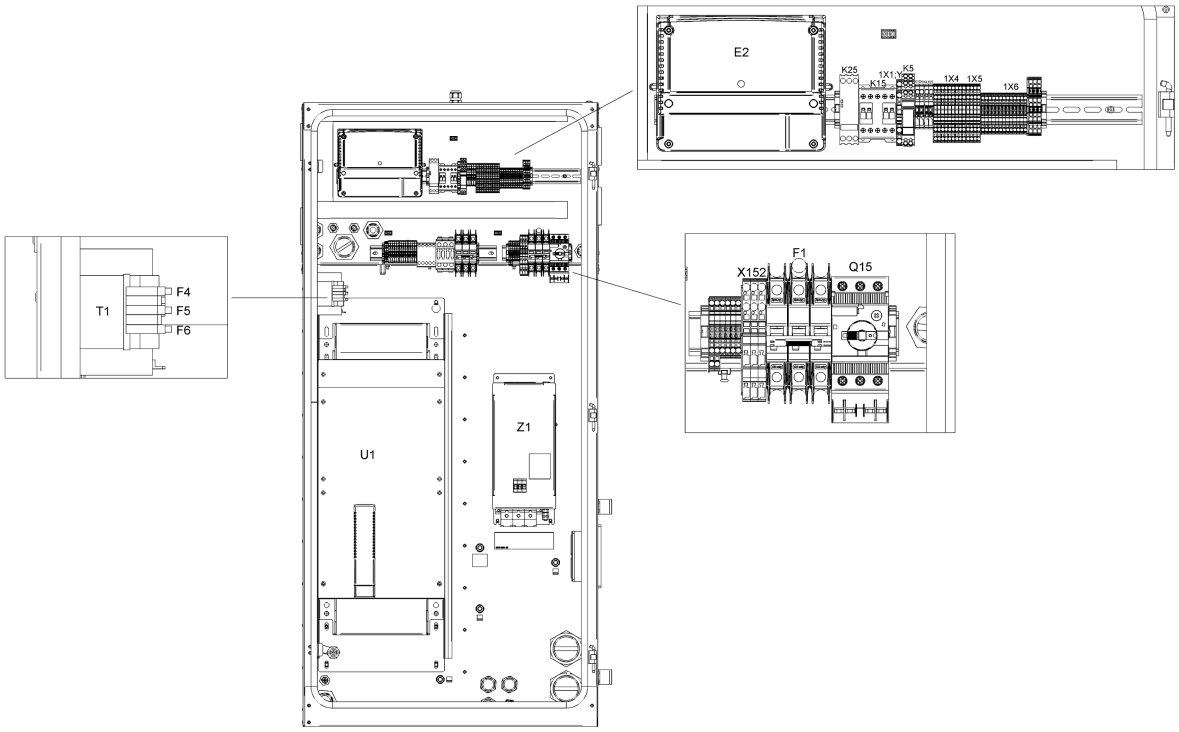

21.16 - Cubicle components GA 90 VSD+ - (200V-380V-460V/60Hz - IEC, 230V-460V-575V/60Hz - UL-cUL, 200V-400V-500V/50Hz - IEC) - Pack (17/12/2019 - ...)

((((CAPPRM:AS1210 , CAPPRM:CE , CAPPRM:MHLW , CAPPRM:MOM) + MOVOL:400V , CAPPRM:CE + COOL:AIR + MOVOL:500V) + FREQ:50HZ , ((MOVOL:380V , MOVOL:460V) + CAPPRM:ASME , CAPPRM:MHLW + MOVOL:460V) + FREQ:60HZ , CAPPRM:MHLW + COOL:AIR + MOVOL:200V) + CAPPRE:IEC , ((MOVOL:230V , MOVOL:575V) + COOL:AIR , MOVOL:460V) + CAPPRE:ULCUL + CAPPRM:ASME + FREQ:60HZ) + IDRY:N + MODEL:GA90VP_16

Ref	Part Number	Qty	Name	Validity	EL
	1079 9901 68	1	WARNING LABEL	**(25/02/2019 - 05/12/2019)** ((((MOVOL:380V , MOVOL:460V) + CAPPRM:ASME , CAPPRM:MHLW + MOVOL:460V) + FREQ:60HZ , (CAPPRM:AS1210 , CAPPRM:CE , CAPPRM:MHLW , CAPPRM:MOM) + FREQ:50HZ + MOVOL:400V) + CAPPRE:IEC , CAPPRE:ULCUL + CAPPRM:ASME + FREQ:60HZ + MOVOL:460V) + COOL:WATER **(06/12/2019 - 16/12/2019)** (((((MOVOL:380V , MOVOL:460V) + CAPPRM:ASME , CAPPRM:MHLW + MOVOL:460V) + FREQ:60HZ , (CAPPRM:AS1210 , CAPPRM:CE , CAPPRM:MHLW , CAPPRM:MOM) + FREQ:50HZ + MOVOL:400V) + COOL:WATER , CAPPRM:CE + COOL:AIR + FREQ:50HZ + MOVOL:500V) + CAPPRE:IEC , CAPPRE:ULCUL + CAPPRM:ASME + COOL:WATER + FREQ:60HZ + MOVOL:460V) **(17/12/2019 - ...)**	Label
	1649 8005 00	0	LABEL	**(25/02/2019 - 05/12/2019)** ((((MOVOL:380V , MOVOL:460V) + CAPPRM:ASME , CAPPRM:MHLW + MOVOL:460V) + FREQ:60HZ , (CAPPRM:AS1210 , CAPPRM:CE , CAPPRM:MHLW , CAPPRM:MOM) + FREQ:50HZ + MOVOL:400V) + CAPPRE:IEC , CAPPRE:ULCUL + CAPPRM:ASME + FREQ:60HZ + MOVOL:460V) + COOL:WATER **(06/12/2019 - 16/12/2019)** (((((MOVOL:380V , MOVOL:460V) + CAPPRM:ASME , CAPPRM:MHLW + MOVOL:460V) + FREQ:60HZ , (CAPPRM:AS1210 , CAPPRM:CE , CAPPRM:MHLW , CAPPRM:MOM) + FREQ:50HZ + MOVOL:400V) + COOL:WATER , CAPPRM:CE + COOL:AIR + FREQ:50HZ + MOVOL:500V) + CAPPRE:IEC , CAPPRE:ULCUL + CAPPRM:ASME + COOL:WATER + FREQ:60HZ + MOVOL:460V) **(17/12/2019 - ...)**	Label
	1900 5350 14	1	INVERTER	**(25/02/2019 - 05/12/2019)** ((((MOVOL:380V , MOVOL:460V) + CAPPRM:ASME , CAPPRM:MHLW + MOVOL:460V) + FREQ:60HZ , (CAPPRM:AS1210 , CAPPRM:CE , CAPPRM:MHLW , CAPPRM:MOM) + FREQ:50HZ + MOVOL:400V) + CAPPRE:IEC , CAPPRE:ULCUL + CAPPRM:ASME + FREQ:60HZ + MOVOL:460V) + COOL:WATER **(06/12/2019 - 16/12/2019)** (((((MOVOL:380V , MOVOL:460V) + CAPPRM:ASME , CAPPRM:MHLW + MOVOL:460V) + FREQ:60HZ , (CAPPRM:AS1210 , CAPPRM:CE , CAPPRM:MHLW , CAPPRM:MOM) + FREQ:50HZ + MOVOL:400V) + COOL:WATER , CAPPRM:CE + COOL:AIR + FREQ:50HZ + MOVOL:500V) + CAPPRE:IEC , CAPPRE:ULCUL + CAPPRM:ASME + COOL:WATER + FREQ:60HZ + MOVOL:460V) **(17/12/2019 - ...)**	U1

Legend:

CAPPRE:IEC - Component approval electrical:IEC
CAPPRE:ULCUL - Component approval electrical:UL/cUL
CAPPRM:AS1210 - Component approval mechanical:AS1210
CAPPRM:ASME - Component approval mechanical:ASME
CAPPRM:CE - Component approval mechanical:CE
CAPPRM:MHLW - Component approval mechanical:MHLW
CAPPRM:MOM - Component approval mechanical:MOM
COOL:AIR - Cooling:Air cooled
COOL:WATER - Cooling:Water cooled
FREQ:50HZ - Frequency:50 Hz
FREQ:60HZ - Frequency:60 Hz
IDRY:N - Integrated dryer:No
MODEL:GA90VP_16 - Model:GA 90VSD+
MOVOL:200V - Supply voltage:200 V
MOVOL:230V - Supply voltage:230 V
MOVOL:380V - Supply voltage:380 V
MOVOL:400V - Supply voltage:400 V
MOVOL:460V - Supply voltage:460 V
MOVOL:500V - Supply voltage:500 V
MOVOL:575V - Supply voltage:575 V

21.16 - Cubicle components GA 90 VSD+ - (200V-380V-460V/60Hz - IEC, 230V-460V-575V/60Hz - UL-cUL, 200V-400V-500V/50Hz - IEC) - Pack (17/12/2019 - ...)

((((CAPPRM:AS1210 , CAPPRM:CE , CAPPRM:MHLW , CAPPRM:MOM) + MOVOL:400V , CAPPRM:CE + COOL:AIR + MOVOL:500V) + FREQ:50HZ , ((MOVOL:380V , MOVOL:460V) + CAPPRM:ASME , CAPPRM:MHLW + MOVOL:460V) + FREQ:60HZ , CAPPRM:MHLW + COOL:AIR + MOVOL:200V) + CAPPRE:IEC , ((MOVOL:230V , MOVOL:575V) + COOL:AIR , MOVOL:460V) + CAPPRE:ULCUL + CAPPRM:ASME + FREQ:60HZ) + IDRY:N + MODEL:GA90VP_16

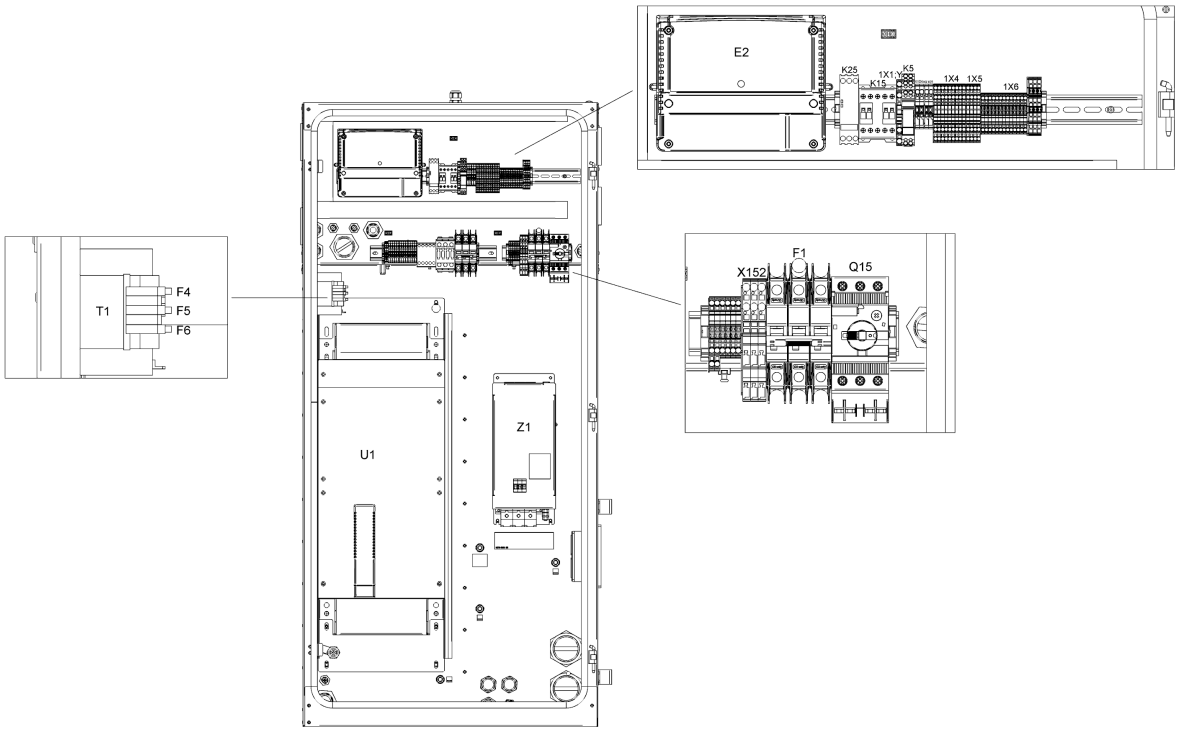

Ref	Part Number	Qty	Name	Validity	EL
	1631 2079 00	1	NANOPERMRING	**(25/02/2019 - 05/12/2019)** ((((MOVOL:380V , MOVOL:460V) + CAPPRM:ASME , CAPPRM:MHLW + MOVOL:460V) + FREQ:60HZ , (CAPPRM:AS1210 , CAPPRM:CE , CAPPRM:MHLW , CAPPRM:MOM) + FREQ:50HZ + MOVOL:400V) + CAPPRE:IEC , CAPPRE:ULCUL + CAPPRM:ASME + FREQ:60HZ + MOVOL:460V) + COOL:WATER **(06/12/2019 - 16/12/2019)** (((((MOVOL:380V , MOVOL:460V) + CAPPRM:ASME , CAPPRM:MHLW + MOVOL:460V) + FREQ:60HZ , (CAPPRM:AS1210 , CAPPRM:CE , CAPPRM:MHLW , CAPPRM:MOM) + FREQ:50HZ + MOVOL:400V) + COOL:WATER , CAPPRM:CE + COOL:AIR + FREQ:50HZ + MOVOL:500V) + CAPPRE:IEC , CAPPRE:ULCUL + CAPPRM:ASME + COOL:WATER + FREQ:60HZ + MOVOL:460V) **(17/12/2019 - ...)**	
	Electrical legend:	Nanoperm ring			
	0697 9811 17	2	PLUG	**(25/02/2019 - 05/12/2019)** ((((MOVOL:380V , MOVOL:460V) + CAPPRM:ASME , CAPPRM:MHLW + MOVOL:460V) + FREQ:60HZ , (CAPPRM:AS1210 , CAPPRM:CE , CAPPRM:MHLW , CAPPRM:MOM) + FREQ:50HZ + MOVOL:400V) + CAPPRE:IEC , CAPPRE:ULCUL + CAPPRM:ASME + FREQ:60HZ + MOVOL:460V) + COOL:WATER **(06/12/2019 - 16/12/2019)** (((((MOVOL:380V , MOVOL:460V) + CAPPRM:ASME , CAPPRM:MHLW + MOVOL:460V) + FREQ:60HZ , (CAPPRM:AS1210 , CAPPRM:CE , CAPPRM:MHLW , CAPPRM:MOM) + FREQ:50HZ + MOVOL:400V) + COOL:WATER , CAPPRM:CE + COOL:AIR + FREQ:50HZ + MOVOL:500V) + CAPPRE:IEC , CAPPRE:ULCUL + CAPPRM:ASME + COOL:WATER + FREQ:60HZ + MOVOL:460V) **(17/12/2019 - ...)**	
	Electrical legend:	Plug for transfo supply			
	0989 3700 48	2	NUT	**(25/02/2019 - 05/12/2019)** ((((MOVOL:380V , MOVOL:460V) + CAPPRM:ASME , CAPPRM:MHLW + MOVOL:460V) + FREQ:60HZ , (CAPPRM:AS1210 , CAPPRM:CE , CAPPRM:MHLW , CAPPRM:MOM) + FREQ:50HZ + MOVOL:400V) + CAPPRE:IEC , CAPPRE:ULCUL + CAPPRM:ASME + FREQ:60HZ + MOVOL:460V) + COOL:WATER **(06/12/2019 - 16/12/2019)** (((((MOVOL:380V , MOVOL:460V) + CAPPRM:ASME , CAPPRM:MHLW + MOVOL:460V) + FREQ:60HZ , (CAPPRM:AS1210 , CAPPRM:CE , CAPPRM:MHLW , CAPPRM:MOM) + FREQ:50HZ + MOVOL:400V) + COOL:WATER , CAPPRM:CE + COOL:AIR + FREQ:50HZ + MOVOL:500V) + CAPPRE:IEC , CAPPRE:ULCUL + CAPPRM:ASME + COOL:WATER + FREQ:60HZ + MOVOL:460V) **(17/12/2019 - ...)**	
	Electrical legend:	Nut for transfo supply			

Legend:

CAPPRE:IEC - Component approval electrical:IEC
CAPPRE:ULCUL - Component approval electrical:UL/cUL
CAPPRM:AS1210 - Component approval mechanical:AS1210
CAPPRM:ASME - Component approval mechanical:ASME
CAPPRM:CE - Component approval mechanical:CE
CAPPRM:MHLW - Component approval mechanical:MHLW
CAPPRM:MOM - Component approval mechanical:MOM
COOL:AIR - Cooling:Air cooled
COOL:WATER - Cooling:Water cooled
FREQ:50HZ - Frequency:50 Hz
FREQ:60HZ - Frequency:60 Hz
IDRY:N - Integrated dryer:No
MODEL:GA90VP_16 - Model:GA 90VSD+
MOVOL:200V - Supply voltage:200 V
MOVOL:230V - Supply voltage:230 V
MOVOL:380V - Supply voltage:380 V
MOVOL:400V - Supply voltage:400 V
MOVOL:460V - Supply voltage:460 V
MOVOL:500V - Supply voltage:500 V
MOVOL:575V - Supply voltage:575 V

21.16 - Cubicle components GA 90 VSD+ - (200V-380V-460V/60Hz - IEC, 230V-460V-575V/60Hz - UL-cUL, 200V-400V-500V/50Hz - IEC) - Pack (17/12/2019 - ...)

((((CAPPRM:AS1210 , CAPPRM:CE , CAPPRM:MHLW , CAPPRM:MOM) + MOVOL:400V , CAPPRM:CE + COOL:AIR + MOVOL:500V) + FREQ:50HZ , ((MOVOL:380V , MOVOL:460V) + CAPPRM:ASME , CAPPRM:MHLW + MOVOL:460V) + FREQ:60HZ , CAPPRM:MHLW + COOL:AIR + MOVOL:200V) + CAPPRE:IEC , ((MOVOL:230V , MOVOL:575V) + COOL:AIR , MOVOL:460V) + CAPPRE:ULCUL + CAPPRM:ASME + FREQ:60HZ) + IDRY:N + MODEL:GA90VP_16

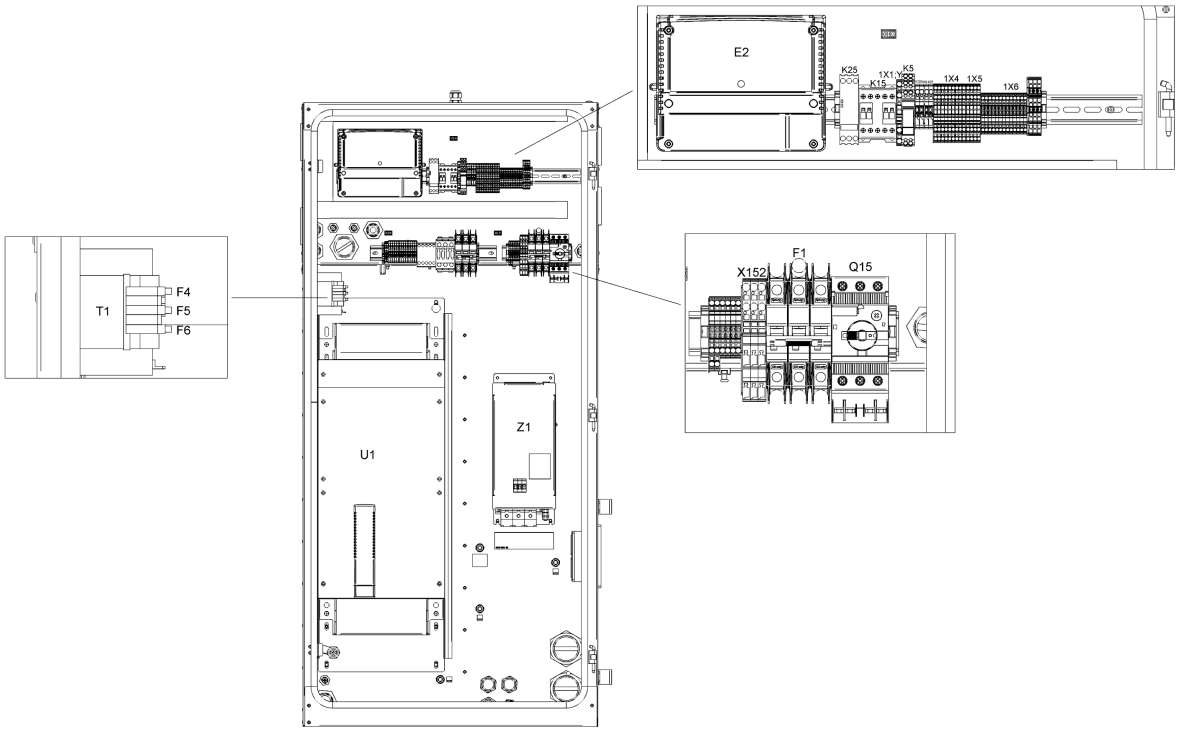

21.16 - Cubicle components GA 90 VSD+ - (200V-380V-460V/60Hz - IEC, 230V-460V-575V/60Hz - UL-cUL, 200V-400V-500V/50Hz - IEC) - Pack (17/12/2019 - ...)

((((CAPPRM:AS1210 , CAPPRM:CE , CAPPRM:MHLW , CAPPRM:MOM) + MOVOL:400V , CAPPRM:CE + COOL:AIR + MOVOL:500V) + FREQ:50HZ , ((MOVOL:380V , MOVOL:460V) + CAPPRM:ASME , CAPPRM:MHLW + MOVOL:460V) + FREQ:60HZ , CAPPRM:MHLW + COOL:AIR + MOVOL:200V) + CAPPRE:IEC , ((MOVOL:230V , MOVOL:575V) + COOL:AIR , MOVOL:460V) + CAPPRE:ULCUL + CAPPRM:ASME + FREQ:60HZ) + IDRY:N + MODEL:GA90VP_16

Ref	Part Number	Qty	Name	Validity	EL
	0698 5140 72	1	CABLE GLAND	**(25/02/2019 - 05/12/2019)** ((((MOVOL:380V , MOVOL:460V) + CAPPRM:ASME , CAPPRM:MHLW + MOVOL:460V) + FREQ:60HZ , (CAPPRM:AS1210 , CAPPRM:CE , CAPPRM:MHLW , CAPPRM:MOM) + FREQ:50HZ + MOVOL:400V) + CAPPRE:IEC , CAPPRE:ULCUL + CAPPRM:ASME + FREQ:60HZ + MOVOL:460V) + COOL:WATER **(06/12/2019 - 16/12/2019)** (((((MOVOL:380V , MOVOL:460V) + CAPPRM:ASME , CAPPRM:MHLW + MOVOL:460V) + FREQ:60HZ , (CAPPRM:AS1210 , CAPPRM:CE , CAPPRM:MHLW , CAPPRM:MOM) + FREQ:50HZ + MOVOL:400V) + COOL:WATER , CAPPRM:CE + COOL:AIR + FREQ:50HZ + MOVOL:500V) + CAPPRE:IEC , CAPPRE:ULCUL + CAPPRM:ASME + COOL:WATER + FREQ:60HZ + MOVOL:460V) **(17/12/2019 - ...)**	Fan
	0698 5140 71	1	CABLE GLAND	**(25/02/2019 - 05/12/2019)** ((((MOVOL:380V , MOVOL:460V) + CAPPRM:ASME , CAPPRM:MHLW + MOVOL:460V) + FREQ:60HZ , (CAPPRM:AS1210 , CAPPRM:CE , CAPPRM:MHLW , CAPPRM:MOM) + FREQ:50HZ + MOVOL:400V) + CAPPRE:IEC , CAPPRE:ULCUL + CAPPRM:ASME + FREQ:60HZ + MOVOL:460V) + COOL:WATER **(06/12/2019 - 16/12/2019)** (((((MOVOL:380V , MOVOL:460V) + CAPPRM:ASME , CAPPRM:MHLW + MOVOL:460V) + FREQ:60HZ , (CAPPRM:AS1210 , CAPPRM:CE , CAPPRM:MHLW , CAPPRM:MOM) + FREQ:50HZ + MOVOL:400V) + COOL:WATER , CAPPRM:CE + COOL:AIR + FREQ:50HZ + MOVOL:500V) + CAPPRE:IEC , CAPPRE:ULCUL + CAPPRM:ASME + COOL:WATER + FREQ:60HZ + MOVOL:460V) **(17/12/2019 - ...)**	
	Electrical legend:	Ambient sensor			
	0697 9809 20	1	LOCKNUT	**(25/02/2019 - 05/12/2019)** ((((MOVOL:380V , MOVOL:460V) + CAPPRM:ASME , CAPPRM:MHLW + MOVOL:460V) + FREQ:60HZ , (CAPPRM:AS1210 , CAPPRM:CE , CAPPRM:MHLW , CAPPRM:MOM) + FREQ:50HZ + MOVOL:400V) + CAPPRE:IEC , CAPPRE:ULCUL + CAPPRM:ASME + FREQ:60HZ + MOVOL:460V) + COOL:WATER **(06/12/2019 - 16/12/2019)** (((((MOVOL:380V , MOVOL:460V) + CAPPRM:ASME , CAPPRM:MHLW + MOVOL:460V) + FREQ:60HZ , (CAPPRM:AS1210 , CAPPRM:CE , CAPPRM:MHLW , CAPPRM:MOM) + FREQ:50HZ + MOVOL:400V) + COOL:WATER , CAPPRM:CE + COOL:AIR + FREQ:50HZ + MOVOL:500V) + CAPPRE:IEC , CAPPRE:ULCUL + CAPPRM:ASME + COOL:WATER + FREQ:60HZ + MOVOL:460V) **(17/12/2019 - ...)**	
	Electrical legend:	Ambient sensor			

Legend:

CAPPRE:IEC - Component approval electrical:IEC
CAPPRE:ULCUL - Component approval electrical:UL/cUL
CAPPRM:AS1210 - Component approval mechanical:AS1210
CAPPRM:ASME - Component approval mechanical:ASME
CAPPRM:CE - Component approval mechanical:CE
CAPPRM:MHLW - Component approval mechanical:MHLW
CAPPRM:MOM - Component approval mechanical:MOM
COOL:AIR - Cooling:Air cooled
COOL:WATER - Cooling:Water cooled
FREQ:50HZ - Frequency:50 Hz
FREQ:60HZ - Frequency:60 Hz
IDRY:N - Integrated dryer:No
MODEL:GA90VP_16 - Model:GA 90VSD+
MOVOL:200V - Supply voltage:200 V
MOVOL:230V - Supply voltage:230 V
MOVOL:380V - Supply voltage:380 V
MOVOL:400V - Supply voltage:400 V
MOVOL:460V - Supply voltage:460 V
MOVOL:500V - Supply voltage:500 V
MOVOL:575V - Supply voltage:575 V

21.16 - Cubicle components GA 90 VSD+ - (200V-380V-460V/60Hz - IEC, 230V-460V-575V/60Hz - UL-cUL, 200V-400V-500V/50Hz - IEC) - Pack (17/12/2019 - ...)

((((CAPPRM:AS1210 , CAPPRM:CE , CAPPRM:MHLW , CAPPRM:MOM) + MOVOL:400V , CAPPRM:CE + COOL:AIR + MOVOL:500V) + FREQ:50HZ , ((MOVOL:380V , MOVOL:460V) + CAPPRM:ASME , CAPPRM:MHLW + MOVOL:460V) + FREQ:60HZ , CAPPRM:MHLW + COOL:AIR + MOVOL:200V) + CAPPRE:IEC , ((MOVOL:230V , MOVOL:575V) + COOL:AIR , MOVOL:460V) + CAPPRE:ULCUL + CAPPRM:ASME + FREQ:60HZ) + IDRY:N + MODEL:GA90VP_16

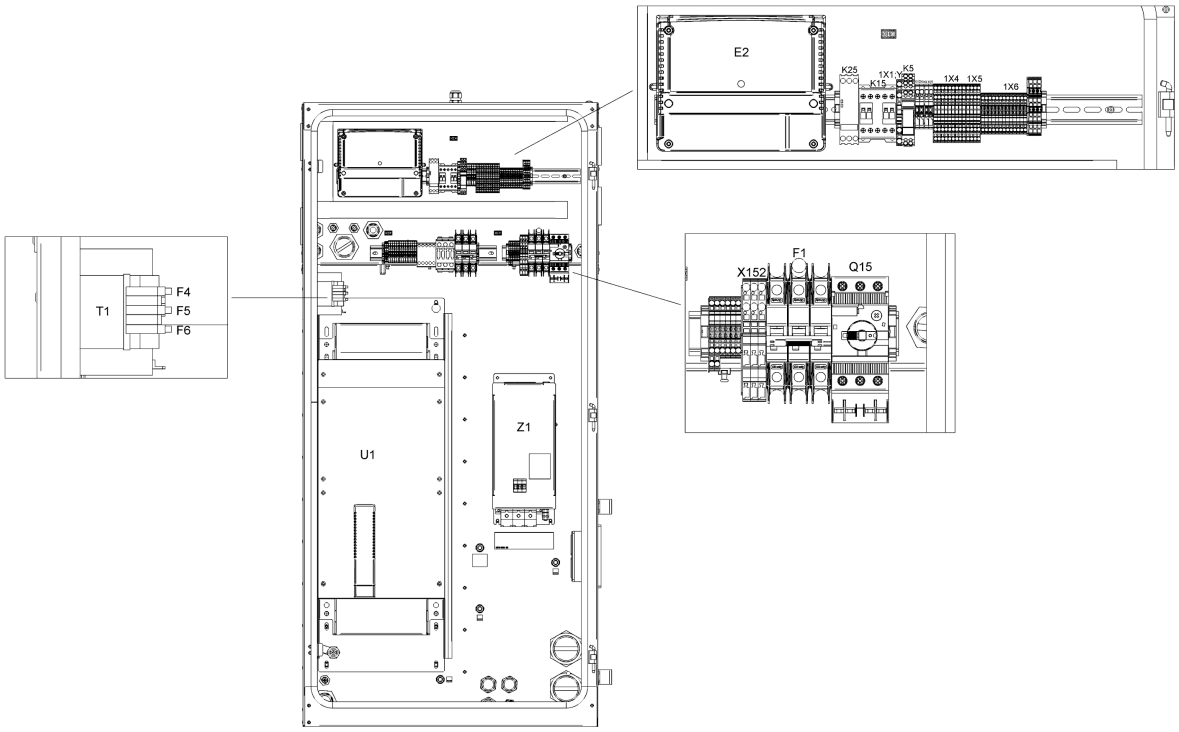

21.16 - Cubicle components GA 90 VSD+ - (200V-380V-460V/60Hz - IEC, 230V-460V-575V/60Hz - UL-cUL, 200V-400V-500V/50Hz - IEC) - Pack (17/12/2019 - ...)

((((CAPPRM:AS1210 , CAPPRM:CE , CAPPRM:MHLW , CAPPRM:MOM) + MOVOL:400V , CAPPRM:CE + COOL:AIR + MOVOL:500V) + FREQ:50HZ , ((MOVOL:380V , MOVOL:460V) + CAPPRM:ASME , CAPPRM:MHLW + MOVOL:460V) + FREQ:60HZ , CAPPRM:MHLW + COOL:AIR + MOVOL:200V) + CAPPRE:IEC , ((MOVOL:230V , MOVOL:575V) + COOL:AIR , MOVOL:460V) + CAPPRE:ULCUL + CAPPRM:ASME + FREQ:60HZ) + IDRY:N + MODEL:GA90VP_16

Ref	Part Number	Qty	Name	Validity	EL
	1089 9556 44	1	FAN WITH FILTER	**(25/02/2019 - 05/12/2019)** ((((MOVOL:380V , MOVOL:460V) + CAPPRM:ASME , CAPPRM:MHLW + MOVOL:460V) + FREQ:60HZ , (CAPPRM:AS1210 , CAPPRM:CE , CAPPRM:MHLW , CAPPRM:MOM) + FREQ:50HZ + MOVOL:400V) + CAPPRE:IEC , CAPPRE:ULCUL + CAPPRM:ASME + FREQ:60HZ + MOVOL:460V) + COOL:WATER **(06/12/2019 - 16/12/2019)** (((((MOVOL:380V , MOVOL:460V) + CAPPRM:ASME , CAPPRM:MHLW + MOVOL:460V) + FREQ:60HZ , (CAPPRM:AS1210 , CAPPRM:CE , CAPPRM:MHLW , CAPPRM:MOM) + FREQ:50HZ + MOVOL:400V) + COOL:WATER , CAPPRM:CE + COOL:AIR + FREQ:50HZ + MOVOL:500V) + CAPPRE:IEC , CAPPRE:ULCUL + CAPPRM:ASME + COOL:WATER + FREQ:60HZ + MOVOL:460V) **(17/12/2019 - ...)**	Cubicle fan
	1089 9556 72	4	AIR INLET WITHOUT FILTER	**(25/02/2019 - 05/12/2019)** ((((MOVOL:380V , MOVOL:460V) + CAPPRM:ASME , CAPPRM:MHLW + MOVOL:460V) + FREQ:60HZ , (CAPPRM:AS1210 , CAPPRM:CE , CAPPRM:MHLW , CAPPRM:MOM) + FREQ:50HZ + MOVOL:400V) + CAPPRE:IEC , CAPPRE:ULCUL + CAPPRM:ASME + FREQ:60HZ + MOVOL:460V) + COOL:WATER **(06/12/2019 - 16/12/2019)** (((((MOVOL:380V , MOVOL:460V) + CAPPRM:ASME , CAPPRM:MHLW + MOVOL:460V) + FREQ:60HZ , (CAPPRM:AS1210 , CAPPRM:CE , CAPPRM:MHLW , CAPPRM:MOM) + FREQ:50HZ + MOVOL:400V) + COOL:WATER , CAPPRM:CE + COOL:AIR + FREQ:50HZ + MOVOL:500V) + CAPPRE:IEC , CAPPRE:ULCUL + CAPPRM:ASME + COOL:WATER + FREQ:60HZ + MOVOL:460V) **(17/12/2019 - ...)**	Filter grid
	1088 0032 09	1	CONNECTOR	**(25/02/2019 - 05/12/2019)** ((((MOVOL:380V , MOVOL:460V) + CAPPRM:ASME , CAPPRM:MHLW + MOVOL:460V) + FREQ:60HZ , (CAPPRM:AS1210 , CAPPRM:CE , CAPPRM:MHLW , CAPPRM:MOM) + FREQ:50HZ + MOVOL:400V) + CAPPRE:IEC , CAPPRE:ULCUL + CAPPRM:ASME + FREQ:60HZ + MOVOL:460V) + COOL:WATER **(06/12/2019 - 16/12/2019)** (((((MOVOL:380V , MOVOL:460V) + CAPPRM:ASME , CAPPRM:MHLW + MOVOL:460V) + FREQ:60HZ , (CAPPRM:AS1210 , CAPPRM:CE , CAPPRM:MHLW , CAPPRM:MOM) + FREQ:50HZ + MOVOL:400V) + COOL:WATER , CAPPRM:CE + COOL:AIR + FREQ:50HZ + MOVOL:500V) + CAPPRE:IEC , CAPPRE:ULCUL + CAPPRM:ASME + COOL:WATER + FREQ:60HZ + MOVOL:460V) **(17/12/2019 - ...)**	X3

Legend:

CAPPRE:IEC - Component approval electrical:IEC
CAPPRE:ULCUL - Component approval electrical:UL/cUL
CAPPRM:AS1210 - Component approval mechanical:AS1210
CAPPRM:ASME - Component approval mechanical:ASME
CAPPRM:CE - Component approval mechanical:CE
CAPPRM:MHLW - Component approval mechanical:MHLW
CAPPRM:MOM - Component approval mechanical:MOM
COOL:AIR - Cooling:Air cooled
COOL:WATER - Cooling:Water cooled
FREQ:50HZ - Frequency:50 Hz
FREQ:60HZ - Frequency:60 Hz
IDRY:N - Integrated dryer:No
MODEL:GA90VP_16 - Model:GA 90VSD+
MOVOL:200V - Supply voltage:200 V
MOVOL:230V - Supply voltage:230 V
MOVOL:380V - Supply voltage:380 V
MOVOL:400V - Supply voltage:400 V
MOVOL:460V - Supply voltage:460 V
MOVOL:500V - Supply voltage:500 V
MOVOL:575V - Supply voltage:575 V

21.16 - Cubicle components GA 90 VSD+ - (200V-380V-460V/60Hz - IEC, 230V-460V-575V/60Hz - UL-cUL, 200V-400V-500V/50Hz - IEC) - Pack (17/12/2019 - ...)

((((CAPPRM:AS1210 , CAPPRM:CE , CAPPRM:MHLW , CAPPRM:MOM) + MOVOL:400V , CAPPRM:CE + COOL:AIR + MOVOL:500V) + FREQ:50HZ , ((MOVOL:380V , MOVOL:460V) + CAPPRM:ASME , CAPPRM:MHLW + MOVOL:460V) + FREQ:60HZ , CAPPRM:MHLW + COOL:AIR + MOVOL:200V) + CAPPRE:IEC , ((MOVOL:230V , MOVOL:575V) + COOL:AIR , MOVOL:460V) + CAPPRE:ULCUL + CAPPRM:ASME + FREQ:60HZ) + IDRY:N + MODEL:GA90VP_16

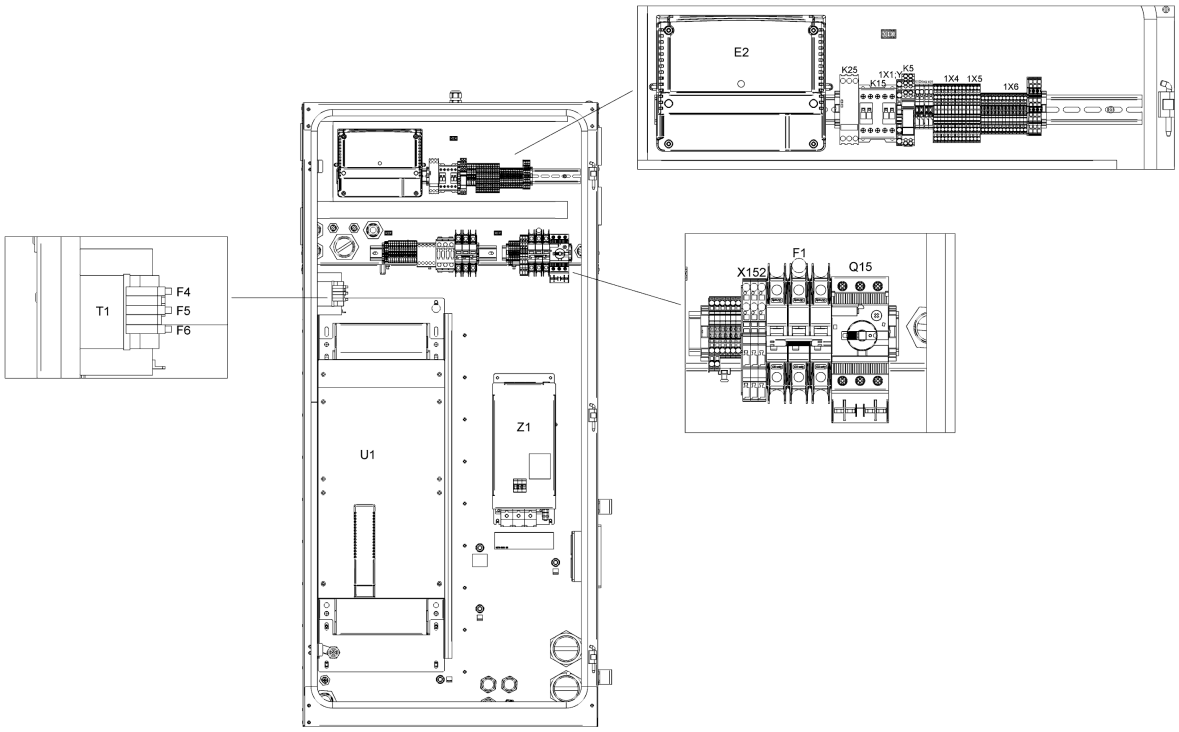

21.16 - Cubicle components GA 90 VSD+ - (200V-380V-460V/60Hz - IEC, 230V-460V-575V/60Hz - UL-cUL, 200V-400V-500V/50Hz - IEC) - Pack (17/12/2019 - ...)

((((CAPPRM:AS1210 , CAPPRM:CE , CAPPRM:MHLW , CAPPRM:MOM) + MOVOL:400V , CAPPRM:CE + COOL:AIR + MOVOL:500V) + FREQ:50HZ , ((MOVOL:380V , MOVOL:460V) + CAPPRM:ASME , CAPPRM:MHLW + MOVOL:460V) + FREQ:60HZ , CAPPRM:MHLW + COOL:AIR + MOVOL:200V) + CAPPRE:IEC , ((MOVOL:230V , MOVOL:575V) + COOL:AIR , MOVOL:460V) + CAPPRE:ULCUL + CAPPRM:ASME + FREQ:60HZ) + IDRY:N + MODEL:GA90VP_16

Ref	Part Number	Qty	Name	Validity	EL
	1089 9572 06	1	LINE FILTER	**(25/02/2019 - 05/12/2019)** ((((MOVOL:380V , MOVOL:460V) + CAPPRM:ASME , CAPPRM:MHLW + MOVOL:460V) + FREQ:60HZ , (CAPPRM:AS1210 , CAPPRM:CE , CAPPRM:MHLW , CAPPRM:MOM) + FREQ:50HZ + MOVOL:400V) + CAPPRE:IEC , CAPPRE:ULCUL + CAPPRM:ASME + FREQ:60HZ + MOVOL:460V) + COOL:WATER **(06/12/2019 - 16/12/2019)** (((((MOVOL:380V , MOVOL:460V) + CAPPRM:ASME , CAPPRM:MHLW + MOVOL:460V) + FREQ:60HZ , (CAPPRM:AS1210 , CAPPRM:CE , CAPPRM:MHLW , CAPPRM:MOM) + FREQ:50HZ + MOVOL:400V) + COOL:WATER , CAPPRM:CE + COOL:AIR + FREQ:50HZ + MOVOL:500V) + CAPPRE:IEC , CAPPRE:ULCUL + CAPPRM:ASME + COOL:WATER + FREQ:60HZ + MOVOL:460V) **(17/12/2019 - ...)**	Z1 for 90kw
	1089 9562 04	1	STRAP	**(25/02/2019 - 05/12/2019)** ((((MOVOL:380V , MOVOL:460V) + CAPPRM:ASME , CAPPRM:MHLW + MOVOL:460V) + FREQ:60HZ , (CAPPRM:AS1210 , CAPPRM:CE , CAPPRM:MHLW , CAPPRM:MOM) + FREQ:50HZ + MOVOL:400V) + CAPPRE:IEC , CAPPRE:ULCUL + CAPPRM:ASME + FREQ:60HZ + MOVOL:460V) + COOL:WATER **(06/12/2019 - 16/12/2019)** (((((MOVOL:380V , MOVOL:460V) + CAPPRM:ASME , CAPPRM:MHLW + MOVOL:460V) + FREQ:60HZ , (CAPPRM:AS1210 , CAPPRM:CE , CAPPRM:MHLW , CAPPRM:MOM) + FREQ:50HZ + MOVOL:400V) + COOL:WATER , CAPPRM:CE + COOL:AIR + FREQ:50HZ + MOVOL:500V) + CAPPRE:IEC , CAPPRE:ULCUL + CAPPRM:ASME + COOL:WATER + FREQ:60HZ + MOVOL:460V) **(17/12/2019 - ...)**	HF-screen
	1089 9514 56	1	TRANSFORMER	**(25/02/2019 - 05/12/2019)** ((((MOVOL:380V , MOVOL:460V) + CAPPRM:ASME , CAPPRM:MHLW + MOVOL:460V) + FREQ:60HZ , (CAPPRM:AS1210 , CAPPRM:CE , CAPPRM:MHLW , CAPPRM:MOM) + FREQ:50HZ + MOVOL:400V) + CAPPRE:IEC , CAPPRE:ULCUL + CAPPRM:ASME + FREQ:60HZ + MOVOL:460V) + COOL:WATER **(06/12/2019 - 16/12/2019)** (((((MOVOL:380V , MOVOL:460V) + CAPPRM:ASME , CAPPRM:MHLW + MOVOL:460V) + FREQ:60HZ , (CAPPRM:AS1210 , CAPPRM:CE , CAPPRM:MHLW , CAPPRM:MOM) + FREQ:50HZ + MOVOL:400V) + COOL:WATER , CAPPRM:CE + COOL:AIR + FREQ:50HZ + MOVOL:500V) + CAPPRE:IEC , CAPPRE:ULCUL + CAPPRM:ASME + COOL:WATER + FREQ:60HZ + MOVOL:460V) **(17/12/2019 - ...)**	T1

Legend:

CAPPRE:IEC - Component approval electrical:IEC
CAPPRE:ULCUL - Component approval electrical:UL/cUL
CAPPRM:AS1210 - Component approval mechanical:AS1210
CAPPRM:ASME - Component approval mechanical:ASME
CAPPRM:CE - Component approval mechanical:CE
CAPPRM:MHLW - Component approval mechanical:MHLW
CAPPRM:MOM - Component approval mechanical:MOM
COOL:AIR - Cooling:Air cooled
COOL:WATER - Cooling:Water cooled
FREQ:50HZ - Frequency:50 Hz
FREQ:60HZ - Frequency:60 Hz
IDRY:N - Integrated dryer:No
MODEL:GA90VP_16 - Model:GA 90VSD+
MOVOL:200V - Supply voltage:200 V
MOVOL:230V - Supply voltage:230 V
MOVOL:380V - Supply voltage:380 V
MOVOL:400V - Supply voltage:400 V
MOVOL:460V - Supply voltage:460 V
MOVOL:500V - Supply voltage:500 V
MOVOL:575V - Supply voltage:575 V

21.16 - Cubicle components GA 90 VSD+ - (200V-380V-460V/60Hz - IEC, 230V-460V-575V/60Hz - UL-cUL, 200V-400V-500V/50Hz - IEC) - Pack (17/12/2019 - ...)

((((CAPPRM:AS1210 , CAPPRM:CE , CAPPRM:MHLW , CAPPRM:MOM) + MOVOL:400V , CAPPRM:CE + COOL:AIR + MOVOL:500V) + FREQ:50HZ , ((MOVOL:380V , MOVOL:460V) + CAPPRM:ASME , CAPPRM:MHLW + MOVOL:460V) + FREQ:60HZ , CAPPRM:MHLW + COOL:AIR + MOVOL:200V) + CAPPRE:IEC , ((MOVOL:230V , MOVOL:575V) + COOL:AIR , MOVOL:460V) + CAPPRE:ULCUL + CAPPRM:ASME + FREQ:60HZ) + IDRY:N + MODEL:GA90VP_16

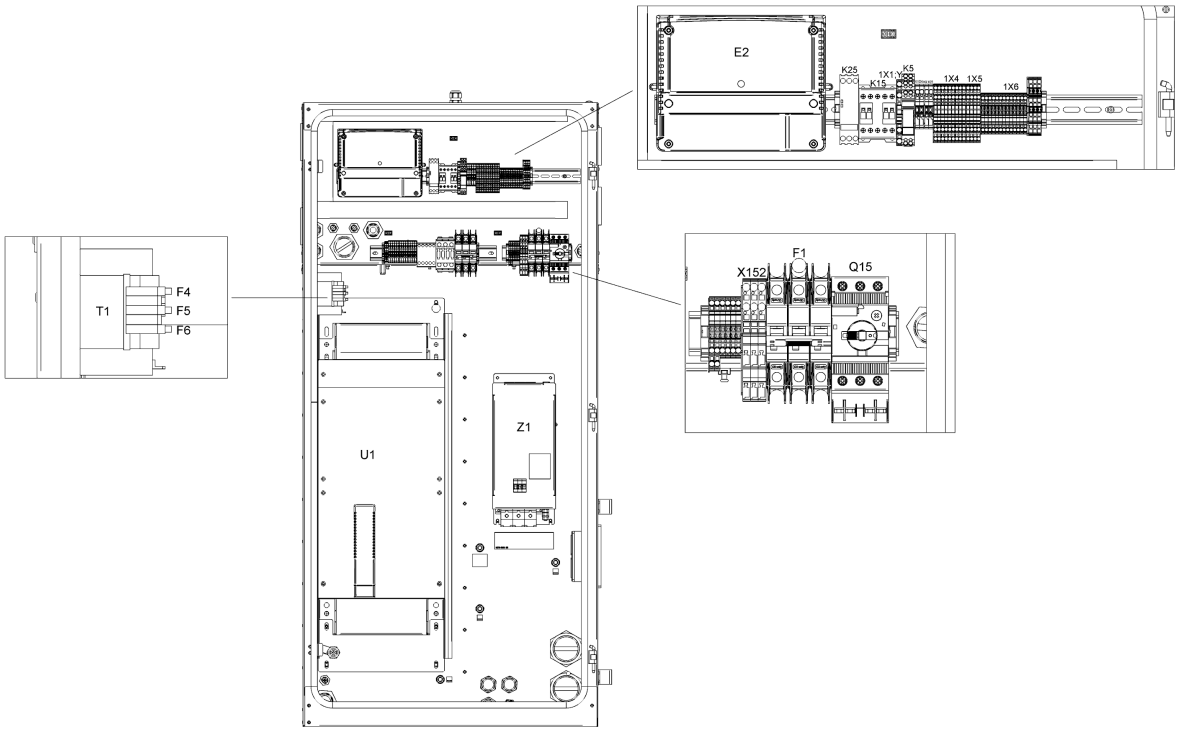

21.16 - Cubicle components GA 90 VSD+ - (200V-380V-460V/60Hz - IEC, 230V-460V-575V/60Hz - UL-cUL, 200V-400V-500V/50Hz - IEC) - Pack (17/12/2019 - ...)

((((CAPPRM:AS1210 , CAPPRM:CE , CAPPRM:MHLW , CAPPRM:MOM) + MOVOL:400V , CAPPRM:CE + COOL:AIR + MOVOL:500V) + FREQ:50HZ , ((MOVOL:380V , MOVOL:460V) + CAPPRM:ASME , CAPPRM:MHLW + MOVOL:460V) + FREQ:60HZ , CAPPRM:MHLW + COOL:AIR + MOVOL:200V) + CAPPRE:IEC , ((MOVOL:230V , MOVOL:575V) + COOL:AIR , MOVOL:460V) + CAPPRE:ULCUL + CAPPRM:ASME + FREQ:60HZ) + IDRY:N + MODEL:GA90VP_16

Ref	Part Number	Qty	Name	Validity	EL
	1089 9522 26	1	CIRCUIT BREAKER	**(25/02/2019 - 05/12/2019)** ((((MOVOL:380V , MOVOL:460V) + CAPPRM:ASME , CAPPRM:MHLW + MOVOL:460V) + FREQ:60HZ , (CAPPRM:AS1210 , CAPPRM:CE , CAPPRM:MHLW , CAPPRM:MOM) + FREQ:50HZ + MOVOL:400V) + CAPPRE:IEC , CAPPRE:ULCUL + CAPPRM:ASME + FREQ:60HZ + MOVOL:460V) + COOL:WATER **(06/12/2019 - 16/12/2019)** (((((MOVOL:380V , MOVOL:460V) + CAPPRM:ASME , CAPPRM:MHLW + MOVOL:460V) + FREQ:60HZ , (CAPPRM:AS1210 , CAPPRM:CE , CAPPRM:MHLW , CAPPRM:MOM) + FREQ:50HZ + MOVOL:400V) + COOL:WATER , CAPPRM:CE + COOL:AIR + FREQ:50HZ + MOVOL:500V) + CAPPRE:IEC , CAPPRE:ULCUL + CAPPRM:ASME + COOL:WATER + FREQ:60HZ + MOVOL:460V) **(17/12/2019 - ...)**	F1
	1089 9513 41	1	PUSH BUTTON	**(25/02/2019 - 05/12/2019)** ((((MOVOL:380V , MOVOL:460V) + CAPPRM:ASME , CAPPRM:MHLW + MOVOL:460V) + FREQ:60HZ , (CAPPRM:AS1210 , CAPPRM:CE , CAPPRM:MHLW , CAPPRM:MOM) + FREQ:50HZ + MOVOL:400V) + CAPPRE:IEC , CAPPRE:ULCUL + CAPPRM:ASME + FREQ:60HZ + MOVOL:460V) + COOL:WATER **(06/12/2019 - 16/12/2019)** (((((MOVOL:380V , MOVOL:460V) + CAPPRM:ASME , CAPPRM:MHLW + MOVOL:460V) + FREQ:60HZ , (CAPPRM:AS1210 , CAPPRM:CE , CAPPRM:MHLW , CAPPRM:MOM) + FREQ:50HZ + MOVOL:400V) + COOL:WATER , CAPPRM:CE + COOL:AIR + FREQ:50HZ + MOVOL:500V) + CAPPRE:IEC , CAPPRE:ULCUL + CAPPRM:ASME + COOL:WATER + FREQ:60HZ + MOVOL:460V) **(17/12/2019 - ...)**	S3
	1089 9513 28	1	HOLDER	**(25/02/2019 - 05/12/2019)** ((((MOVOL:380V , MOVOL:460V) + CAPPRM:ASME , CAPPRM:MHLW + MOVOL:460V) + FREQ:60HZ , (CAPPRM:AS1210 , CAPPRM:CE , CAPPRM:MHLW , CAPPRM:MOM) + FREQ:50HZ + MOVOL:400V) + CAPPRE:IEC , CAPPRE:ULCUL + CAPPRM:ASME + FREQ:60HZ + MOVOL:460V) + COOL:WATER **(06/12/2019 - 16/12/2019)** (((((MOVOL:380V , MOVOL:460V) + CAPPRM:ASME , CAPPRM:MHLW + MOVOL:460V) + FREQ:60HZ , (CAPPRM:AS1210 , CAPPRM:CE , CAPPRM:MHLW , CAPPRM:MOM) + FREQ:50HZ + MOVOL:400V) + COOL:WATER , CAPPRM:CE + COOL:AIR + FREQ:50HZ + MOVOL:500V) + CAPPRE:IEC , CAPPRE:ULCUL + CAPPRM:ASME + COOL:WATER + FREQ:60HZ + MOVOL:460V) **(17/12/2019 - ...)**	S3

Legend:

CAPPRE:IEC - Component approval electrical:IEC
CAPPRE:ULCUL - Component approval electrical:UL/cUL
CAPPRM:AS1210 - Component approval mechanical:AS1210
CAPPRM:ASME - Component approval mechanical:ASME
CAPPRM:CE - Component approval mechanical:CE
CAPPRM:MHLW - Component approval mechanical:MHLW
CAPPRM:MOM - Component approval mechanical:MOM
COOL:AIR - Cooling:Air cooled
COOL:WATER - Cooling:Water cooled
FREQ:50HZ - Frequency:50 Hz
FREQ:60HZ - Frequency:60 Hz
IDRY:N - Integrated dryer:No
MODEL:GA90VP_16 - Model:GA 90VSD+
MOVOL:200V - Supply voltage:200 V
MOVOL:230V - Supply voltage:230 V
MOVOL:380V - Supply voltage:380 V
MOVOL:400V - Supply voltage:400 V
MOVOL:460V - Supply voltage:460 V
MOVOL:500V - Supply voltage:500 V
MOVOL:575V - Supply voltage:575 V

21.16 - Cubicle components GA 90 VSD+ - (200V-380V-460V/60Hz - IEC, 230V-460V-575V/60Hz - UL-cUL, 200V-400V-500V/50Hz - IEC) - Pack (17/12/2019 - ...)

((((CAPPRM:AS1210 , CAPPRM:CE , CAPPRM:MHLW , CAPPRM:MOM) + MOVOL:400V , CAPPRM:CE + COOL:AIR + MOVOL:500V) + FREQ:50HZ , ((MOVOL:380V , MOVOL:460V) + CAPPRM:ASME , CAPPRM:MHLW + MOVOL:460V) + FREQ:60HZ , CAPPRM:MHLW + COOL:AIR + MOVOL:200V) + CAPPRE:IEC , ((MOVOL:230V , MOVOL:575V) + COOL:AIR , MOVOL:460V) + CAPPRE:ULCUL + CAPPRM:ASME + FREQ:60HZ) + IDRY:N + MODEL:GA90VP_16

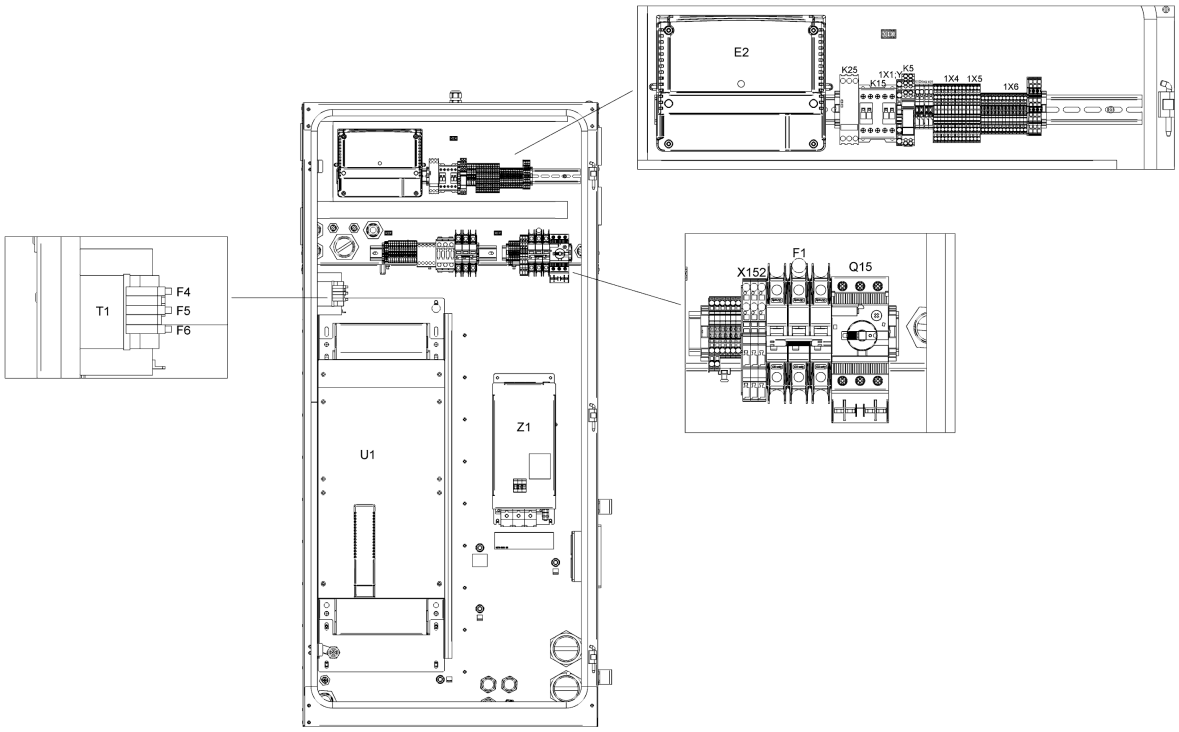

21.16 - Cubicle components GA 90 VSD+ - (200V-380V-460V/60Hz - IEC, 230V-460V-575V/60Hz - UL-cUL, 200V-400V-500V/50Hz - IEC) - Pack (17/12/2019 - ...)

((((CAPPRM:AS1210 , CAPPRM:CE , CAPPRM:MHLW , CAPPRM:MOM) + MOVOL:400V , CAPPRM:CE + COOL:AIR + MOVOL:500V) + FREQ:50HZ , ((MOVOL:380V , MOVOL:460V) + CAPPRM:ASME , CAPPRM:MHLW + MOVOL:460V) + FREQ:60HZ , CAPPRM:MHLW + COOL:AIR + MOVOL:200V) + CAPPRE:IEC , ((MOVOL:230V , MOVOL:575V) + COOL:AIR , MOVOL:460V) + CAPPRE:ULCUL + CAPPRM:ASME + FREQ:60HZ) + IDRY:N + MODEL:GA90VP_16

Ref	Part Number	Qty	Name	Validity	EL
	~~1089 9513 30~~	4	CONTACTOR	**(25/02/2019 - 05/12/2019)** ((((MOVOL:380V , MOVOL:460V) + CAPPRM:ASME , CAPPRM:MHLW + MOVOL:460V) + FREQ:60HZ , (CAPPRM:AS1210 , CAPPRM:CE , CAPPRM:MHLW , CAPPRM:MOM) + FREQ:50HZ + MOVOL:400V) + CAPPRE:IEC , CAPPRE:ULCUL + CAPPRM:ASME + FREQ:60HZ + MOVOL:460V) + COOL:WATER **(06/12/2019 - 16/12/2019)** (((((MOVOL:380V , MOVOL:460V) + CAPPRM:ASME , CAPPRM:MHLW + MOVOL:460V) + FREQ:60HZ , (CAPPRM:AS1210 , CAPPRM:CE , CAPPRM:MHLW , CAPPRM:MOM) + FREQ:50HZ + MOVOL:400V) + COOL:WATER , CAPPRM:CE + COOL:AIR + FREQ:50HZ + MOVOL:500V) + CAPPRE:IEC , CAPPRE:ULCUL + CAPPRM:ASME + COOL:WATER + FREQ:60HZ + MOVOL:460V) **(17/12/2019 - ...)**	S3
	Substituted by:	1089 9513 04 - CONTACT BLOCK (quantity: 1)			
	1088 0039 07	3	TERMINAL	**(25/02/2019 - 05/12/2019)** ((((MOVOL:380V , MOVOL:460V) + CAPPRM:ASME , CAPPRM:MHLW + MOVOL:460V) + FREQ:60HZ , (CAPPRM:AS1210 , CAPPRM:CE , CAPPRM:MHLW , CAPPRM:MOM) + FREQ:50HZ + MOVOL:400V) + CAPPRE:IEC , CAPPRE:ULCUL + CAPPRM:ASME + FREQ:60HZ + MOVOL:460V) + COOL:WATER **(06/12/2019 - 16/12/2019)** (((((MOVOL:380V , MOVOL:460V) + CAPPRM:ASME , CAPPRM:MHLW + MOVOL:460V) + FREQ:60HZ , (CAPPRM:AS1210 , CAPPRM:CE , CAPPRM:MHLW , CAPPRM:MOM) + FREQ:50HZ + MOVOL:400V) + COOL:WATER , CAPPRM:CE + COOL:AIR + FREQ:50HZ + MOVOL:500V) + CAPPRE:IEC , CAPPRE:ULCUL + CAPPRM:ASME + COOL:WATER + FREQ:60HZ + MOVOL:460V) **(17/12/2019 - ...)**	X152
	1088 0039 05	1	PLATE	**(25/02/2019 - 05/12/2019)** ((((MOVOL:380V , MOVOL:460V) + CAPPRM:ASME , CAPPRM:MHLW + MOVOL:460V) + FREQ:60HZ , (CAPPRM:AS1210 , CAPPRM:CE , CAPPRM:MHLW , CAPPRM:MOM) + FREQ:50HZ + MOVOL:400V) + CAPPRE:IEC , CAPPRE:ULCUL + CAPPRM:ASME + FREQ:60HZ + MOVOL:460V) + COOL:WATER **(06/12/2019 - 16/12/2019)** (((((MOVOL:380V , MOVOL:460V) + CAPPRM:ASME , CAPPRM:MHLW + MOVOL:460V) + FREQ:60HZ , (CAPPRM:AS1210 , CAPPRM:CE , CAPPRM:MHLW , CAPPRM:MOM) + FREQ:50HZ + MOVOL:400V) + COOL:WATER , CAPPRM:CE + COOL:AIR + FREQ:50HZ + MOVOL:500V) + CAPPRE:IEC , CAPPRE:ULCUL + CAPPRM:ASME + COOL:WATER + FREQ:60HZ + MOVOL:460V) **(17/12/2019 - ...)**	X152

Legend:

CAPPRE:IEC - Component approval electrical:IEC
CAPPRE:ULCUL - Component approval electrical:UL/cUL
CAPPRM:AS1210 - Component approval mechanical:AS1210
CAPPRM:ASME - Component approval mechanical:ASME
CAPPRM:CE - Component approval mechanical:CE
CAPPRM:MHLW - Component approval mechanical:MHLW
CAPPRM:MOM - Component approval mechanical:MOM
COOL:AIR - Cooling:Air cooled
COOL:WATER - Cooling:Water cooled
FREQ:50HZ - Frequency:50 Hz
FREQ:60HZ - Frequency:60 Hz
IDRY:N - Integrated dryer:No
MODEL:GA90VP_16 - Model:GA 90VSD+
MOVOL:200V - Supply voltage:200 V
MOVOL:230V - Supply voltage:230 V
MOVOL:380V - Supply voltage:380 V
MOVOL:400V - Supply voltage:400 V
MOVOL:460V - Supply voltage:460 V
MOVOL:500V - Supply voltage:500 V
MOVOL:575V - Supply voltage:575 V

21.16 - Cubicle components GA 90 VSD+ - (200V-380V-460V/60Hz - IEC, 230V-460V-575V/60Hz - UL-cUL, 200V-400V-500V/50Hz - IEC) - Pack (17/12/2019 - ...)

((((CAPPRM:AS1210 , CAPPRM:CE , CAPPRM:MHLW , CAPPRM:MOM) + MOVOL:400V , CAPPRM:CE + COOL:AIR + MOVOL:500V) + FREQ:50HZ , ((MOVOL:380V , MOVOL:460V) + CAPPRM:ASME , CAPPRM:MHLW + MOVOL:460V) + FREQ:60HZ , CAPPRM:MHLW + COOL:AIR + MOVOL:200V) + CAPPRE:IEC , ((MOVOL:230V , MOVOL:575V) + COOL:AIR , MOVOL:460V) + CAPPRE:ULCUL + CAPPRM:ASME + FREQ:60HZ) + IDRY:N + MODEL:GA90VP_16

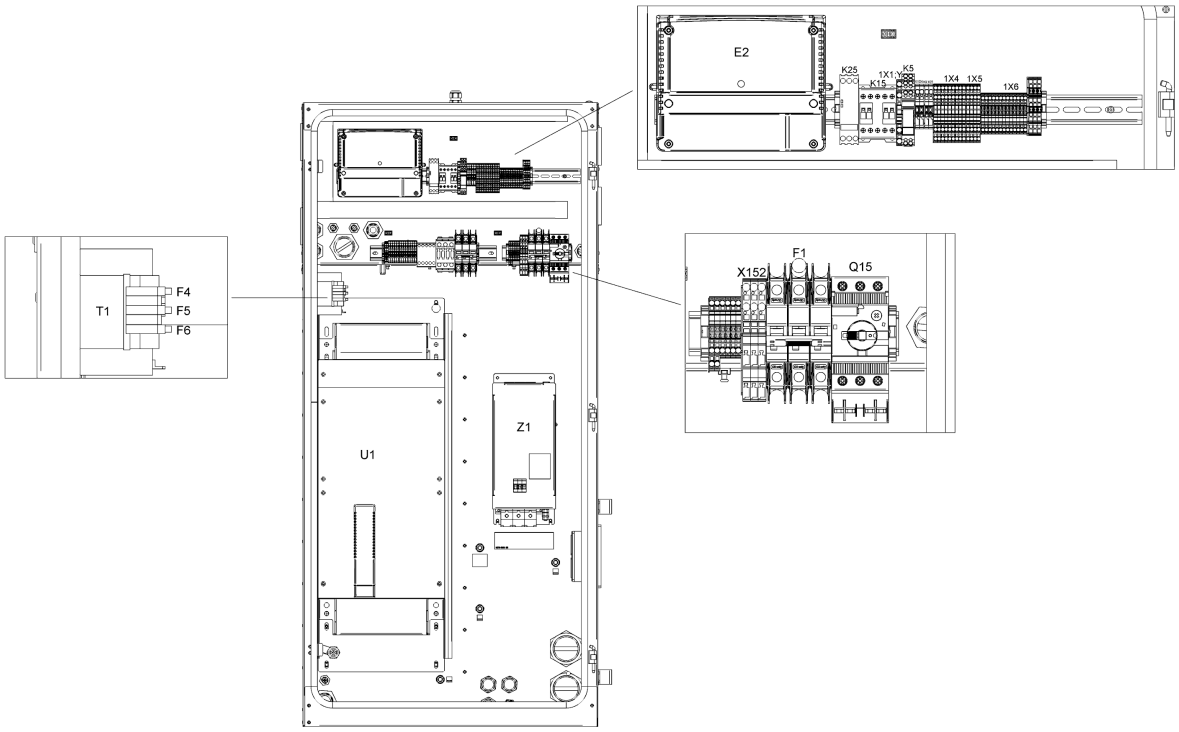

21.16 - Cubicle components GA 90 VSD+ - (200V-380V-460V/60Hz - IEC, 230V-460V-575V/60Hz - UL-cUL, 200V-400V-500V/50Hz - IEC) - Pack (17/12/2019 - ...)

((((CAPPRM:AS1210 , CAPPRM:CE , CAPPRM:MHLW , CAPPRM:MOM) + MOVOL:400V , CAPPRM:CE + COOL:AIR + MOVOL:500V) + FREQ:50HZ , ((MOVOL:380V , MOVOL:460V) + CAPPRM:ASME , CAPPRM:MHLW + MOVOL:460V) + FREQ:60HZ , CAPPRM:MHLW + COOL:AIR + MOVOL:200V) + CAPPRE:IEC , ((MOVOL:230V , MOVOL:575V) + COOL:AIR , MOVOL:460V) + CAPPRE:ULCUL + CAPPRM:ASME + FREQ:60HZ) + IDRY:N + MODEL:GA90VP_16

Ref	Part Number	Qty	Name	Validity	EL
	1088 0039 26	1	CONNECTOR	**(25/02/2019 - 05/12/2019)** ((((MOVOL:380V , MOVOL:460V) + CAPPRM:ASME , CAPPRM:MHLW + MOVOL:460V) + FREQ:60HZ , (CAPPRM:AS1210 , CAPPRM:CE , CAPPRM:MHLW , CAPPRM:MOM) + FREQ:50HZ + MOVOL:400V) + CAPPRE:IEC , CAPPRE:ULCUL + CAPPRM:ASME + FREQ:60HZ + MOVOL:460V) + COOL:WATER **(06/12/2019 - 16/12/2019)** (((((MOVOL:380V , MOVOL:460V) + CAPPRM:ASME , CAPPRM:MHLW + MOVOL:460V) + FREQ:60HZ , (CAPPRM:AS1210 , CAPPRM:CE , CAPPRM:MHLW , CAPPRM:MOM) + FREQ:50HZ + MOVOL:400V) + COOL:WATER , CAPPRM:CE + COOL:AIR + FREQ:50HZ + MOVOL:500V) + CAPPRE:IEC , CAPPRE:ULCUL + CAPPRM:ASME + COOL:WATER + FREQ:60HZ + MOVOL:460V) **(17/12/2019 - ...)**	
	Electrical legend:	X152 (remove coding pin 1,3)			
	1088 0037 99	4	PIN	**(25/02/2019 - 05/12/2019)** ((((MOVOL:380V , MOVOL:460V) + CAPPRM:ASME , CAPPRM:MHLW + MOVOL:460V) + FREQ:60HZ , (CAPPRM:AS1210 , CAPPRM:CE , CAPPRM:MHLW , CAPPRM:MOM) + FREQ:50HZ + MOVOL:400V) + CAPPRE:IEC , CAPPRE:ULCUL + CAPPRM:ASME + FREQ:60HZ + MOVOL:460V) + COOL:WATER **(06/12/2019 - 16/12/2019)** (((((MOVOL:380V , MOVOL:460V) + CAPPRM:ASME , CAPPRM:MHLW + MOVOL:460V) + FREQ:60HZ , (CAPPRM:AS1210 , CAPPRM:CE , CAPPRM:MHLW , CAPPRM:MOM) + FREQ:50HZ + MOVOL:400V) + COOL:WATER , CAPPRM:CE + COOL:AIR + FREQ:50HZ + MOVOL:500V) + CAPPRE:IEC , CAPPRE:ULCUL + CAPPRM:ASME + COOL:WATER + FREQ:60HZ + MOVOL:460V) **(17/12/2019 - ...)**	X152:1; 3
	~~1088 0031 81~~	7	END STOP BRACKET 6MM	**(25/02/2019 - 05/12/2019)** ((((MOVOL:380V , MOVOL:460V) + CAPPRM:ASME , CAPPRM:MHLW + MOVOL:460V) + FREQ:60HZ , (CAPPRM:AS1210 , CAPPRM:CE , CAPPRM:MHLW , CAPPRM:MOM) + FREQ:50HZ + MOVOL:400V) + CAPPRE:IEC , CAPPRE:ULCUL + CAPPRM:ASME + FREQ:60HZ + MOVOL:460V) + COOL:WATER **(06/12/2019 - 16/12/2019)** (((((MOVOL:380V , MOVOL:460V) + CAPPRM:ASME , CAPPRM:MHLW + MOVOL:460V) + FREQ:60HZ , (CAPPRM:AS1210 , CAPPRM:CE , CAPPRM:MHLW , CAPPRM:MOM) + FREQ:50HZ + MOVOL:400V) + COOL:WATER , CAPPRM:CE + COOL:AIR + FREQ:50HZ + MOVOL:500V) + CAPPRE:IEC , CAPPRE:ULCUL + CAPPRM:ASME + COOL:WATER + FREQ:60HZ + MOVOL:460V) **(17/12/2019 - ...)**	
	Electrical legend:	Connector/terminal rail			
	Substituted by:	1089 0577 82 - END RETAINER (quantity: 1)			

Legend:

CAPPRE:IEC - Component approval electrical:IEC
CAPPRE:ULCUL - Component approval electrical:UL/cUL
CAPPRM:AS1210 - Component approval mechanical:AS1210
CAPPRM:ASME - Component approval mechanical:ASME
CAPPRM:CE - Component approval mechanical:CE
CAPPRM:MHLW - Component approval mechanical:MHLW
CAPPRM:MOM - Component approval mechanical:MOM
COOL:AIR - Cooling:Air cooled
COOL:WATER - Cooling:Water cooled
FREQ:50HZ - Frequency:50 Hz
FREQ:60HZ - Frequency:60 Hz
IDRY:N - Integrated dryer:No
MODEL:GA90VP_16 - Model:GA 90VSD+
MOVOL:200V - Supply voltage:200 V
MOVOL:230V - Supply voltage:230 V
MOVOL:380V - Supply voltage:380 V
MOVOL:400V - Supply voltage:400 V
MOVOL:460V - Supply voltage:460 V
MOVOL:500V - Supply voltage:500 V
MOVOL:575V - Supply voltage:575 V

21.16 - Cubicle components GA 90 VSD+ - (200V-380V-460V/60Hz - IEC, 230V-460V-575V/60Hz - UL-cUL, 200V-400V-500V/50Hz - IEC) - Pack (17/12/2019 - ...)

((((CAPPRM:AS1210 , CAPPRM:CE , CAPPRM:MHLW , CAPPRM:MOM) + MOVOL:400V , CAPPRM:CE + COOL:AIR + MOVOL:500V) + FREQ:50HZ , ((MOVOL:380V , MOVOL:460V) + CAPPRM:ASME , CAPPRM:MHLW + MOVOL:460V) + FREQ:60HZ , CAPPRM:MHLW + COOL:AIR + MOVOL:200V) + CAPPRE:IEC , ((MOVOL:230V , MOVOL:575V) + COOL:AIR , MOVOL:460V) + CAPPRE:ULCUL + CAPPRM:ASME + FREQ:60HZ) + IDRY:N + MODEL:GA90VP_16

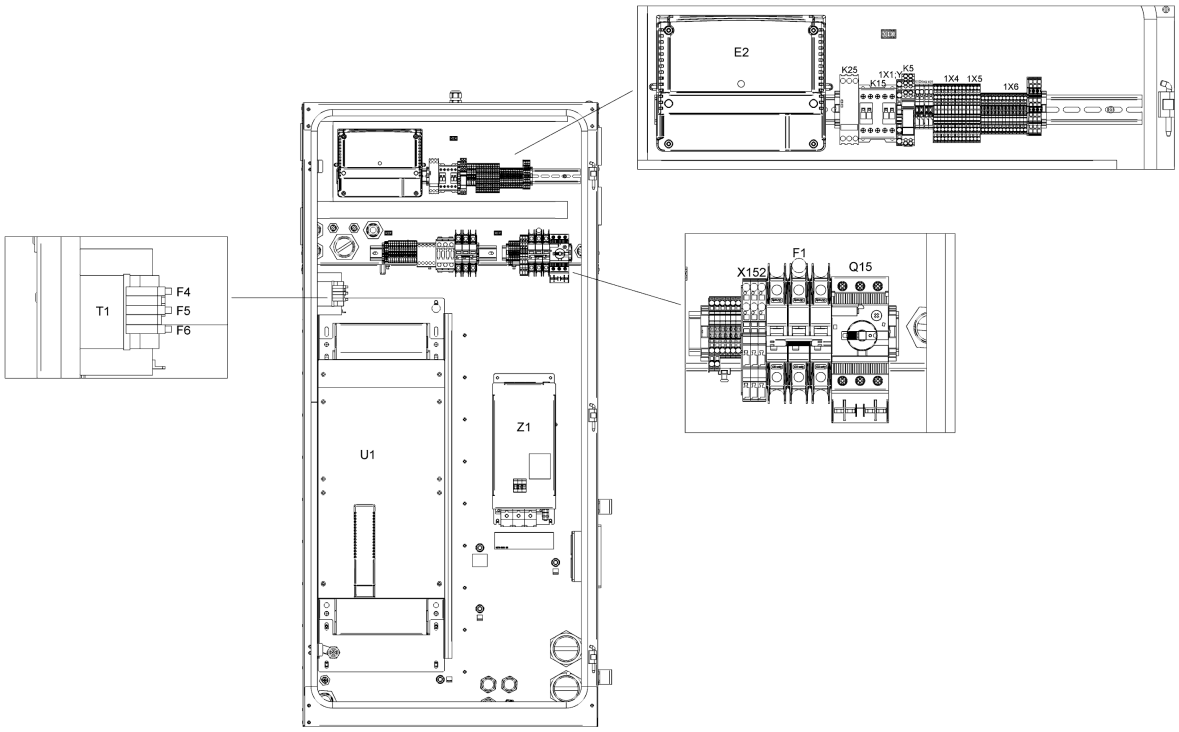

21.16 - Cubicle components GA 90 VSD+ - (200V-380V-460V/60Hz - IEC, 230V-460V-575V/60Hz - UL-cUL, 200V-400V-500V/50Hz - IEC) - Pack (17/12/2019 - ...)

((((CAPPRM:AS1210 , CAPPRM:CE , CAPPRM:MHLW , CAPPRM:MOM) + MOVOL:400V , CAPPRM:CE + COOL:AIR + MOVOL:500V) + FREQ:50HZ , ((MOVOL:380V , MOVOL:460V) + CAPPRM:ASME , CAPPRM:MHLW + MOVOL:460V) + FREQ:60HZ , CAPPRM:MHLW + COOL:AIR + MOVOL:200V) + CAPPRE:IEC , ((MOVOL:230V , MOVOL:575V) + COOL:AIR , MOVOL:460V) + CAPPRE:ULCUL + CAPPRM:ASME + FREQ:60HZ) + IDRY:N + MODEL:GA90VP_16

Ref	Part Number	Qty	Name	Validity	EL
	1088 0039 38	2	TERMINAL	**(25/02/2019 - 05/12/2019)** ((((MOVOL:380V , MOVOL:460V) + CAPPRM:ASME , CAPPRM:MHLW + MOVOL:460V) + FREQ:60HZ , (CAPPRM:AS1210 , CAPPRM:CE , CAPPRM:MHLW , CAPPRM:MOM) + FREQ:50HZ + MOVOL:400V) + CAPPRE:IEC , CAPPRE:ULCUL + CAPPRM:ASME + FREQ:60HZ + MOVOL:460V) + COOL:WATER **(06/12/2019 - 16/12/2019)** (((((MOVOL:380V , MOVOL:460V) + CAPPRM:ASME , CAPPRM:MHLW + MOVOL:460V) + FREQ:60HZ , (CAPPRM:AS1210 , CAPPRM:CE , CAPPRM:MHLW , CAPPRM:MOM) + FREQ:50HZ + MOVOL:400V) + COOL:WATER , CAPPRM:CE + COOL:AIR + FREQ:50HZ + MOVOL:500V) + CAPPRE:IEC , CAPPRE:ULCUL + CAPPRM:ASME + COOL:WATER + FREQ:60HZ + MOVOL:460V) **(17/12/2019 - ...)**	1X11:2,5
	1088 0039 40	1	PLATE	**(25/02/2019 - 05/12/2019)** ((((MOVOL:380V , MOVOL:460V) + CAPPRM:ASME , CAPPRM:MHLW + MOVOL:460V) + FREQ:60HZ , (CAPPRM:AS1210 , CAPPRM:CE , CAPPRM:MHLW , CAPPRM:MOM) + FREQ:50HZ + MOVOL:400V) + CAPPRE:IEC , CAPPRE:ULCUL + CAPPRM:ASME + FREQ:60HZ + MOVOL:460V) + COOL:WATER **(06/12/2019 - 16/12/2019)** (((((MOVOL:380V , MOVOL:460V) + CAPPRM:ASME , CAPPRM:MHLW + MOVOL:460V) + FREQ:60HZ , (CAPPRM:AS1210 , CAPPRM:CE , CAPPRM:MHLW , CAPPRM:MOM) + FREQ:50HZ + MOVOL:400V) + COOL:WATER , CAPPRM:CE + COOL:AIR + FREQ:50HZ + MOVOL:500V) + CAPPRE:IEC , CAPPRE:ULCUL + CAPPRM:ASME + COOL:WATER + FREQ:60HZ + MOVOL:460V) **(17/12/2019 - ...)**	1X11
	1088 0039 34	4	TERMINAL	**(25/02/2019 - 05/12/2019)** ((((MOVOL:380V , MOVOL:460V) + CAPPRM:ASME , CAPPRM:MHLW + MOVOL:460V) + FREQ:60HZ , (CAPPRM:AS1210 , CAPPRM:CE , CAPPRM:MHLW , CAPPRM:MOM) + FREQ:50HZ + MOVOL:400V) + CAPPRE:IEC , CAPPRE:ULCUL + CAPPRM:ASME + FREQ:60HZ + MOVOL:460V) + COOL:WATER **(06/12/2019 - 16/12/2019)** (((((MOVOL:380V , MOVOL:460V) + CAPPRM:ASME , CAPPRM:MHLW + MOVOL:460V) + FREQ:60HZ , (CAPPRM:AS1210 , CAPPRM:CE , CAPPRM:MHLW , CAPPRM:MOM) + FREQ:50HZ + MOVOL:400V) + COOL:WATER , CAPPRM:CE + COOL:AIR + FREQ:50HZ + MOVOL:500V) + CAPPRE:IEC , CAPPRE:ULCUL + CAPPRM:ASME + COOL:WATER + FREQ:60HZ + MOVOL:460V) **(17/12/2019 - ...)**	

Electrical legend: 1X11:30,301,34

Legend:

CAPPRE:IEC - Component approval electrical:IEC
CAPPRE:ULCUL - Component approval electrical:UL/cUL
CAPPRM:AS1210 - Component approval mechanical:AS1210
CAPPRM:ASME - Component approval mechanical:ASME
CAPPRM:CE - Component approval mechanical:CE
CAPPRM:MHLW - Component approval mechanical:MHLW
CAPPRM:MOM - Component approval mechanical:MOM
COOL:AIR - Cooling:Air cooled
COOL:WATER - Cooling:Water cooled
FREQ:50HZ - Frequency:50 Hz
FREQ:60HZ - Frequency:60 Hz
IDRY:N - Integrated dryer:No
MODEL:GA90VP_16 - Model:GA 90VSD+
MOVOL:200V - Supply voltage:200 V
MOVOL:230V - Supply voltage:230 V
MOVOL:380V - Supply voltage:380 V
MOVOL:400V - Supply voltage:400 V
MOVOL:460V - Supply voltage:460 V
MOVOL:500V - Supply voltage:500 V
MOVOL:575V - Supply voltage:575 V

21.16 - Cubicle components GA 90 VSD+ - (200V-380V-460V/60Hz - IEC, 230V-460V-575V/60Hz - UL-cUL, 200V-400V-500V/50Hz - IEC) - Pack (17/12/2019 - ...)

((((CAPPRM:AS1210 , CAPPRM:CE , CAPPRM:MHLW , CAPPRM:MOM) + MOVOL:400V , CAPPRM:CE + COOL:AIR + MOVOL:500V) + FREQ:50HZ , ((MOVOL:380V , MOVOL:460V) + CAPPRM:ASME , CAPPRM:MHLW + MOVOL:460V) + FREQ:60HZ , CAPPRM:MHLW + COOL:AIR + MOVOL:200V) + CAPPRE:IEC , ((MOVOL:230V , MOVOL:575V) + COOL:AIR , MOVOL:460V) + CAPPRE:ULCUL + CAPPRM:ASME + FREQ:60HZ) + IDRY:N + MODEL:GA90VP_16

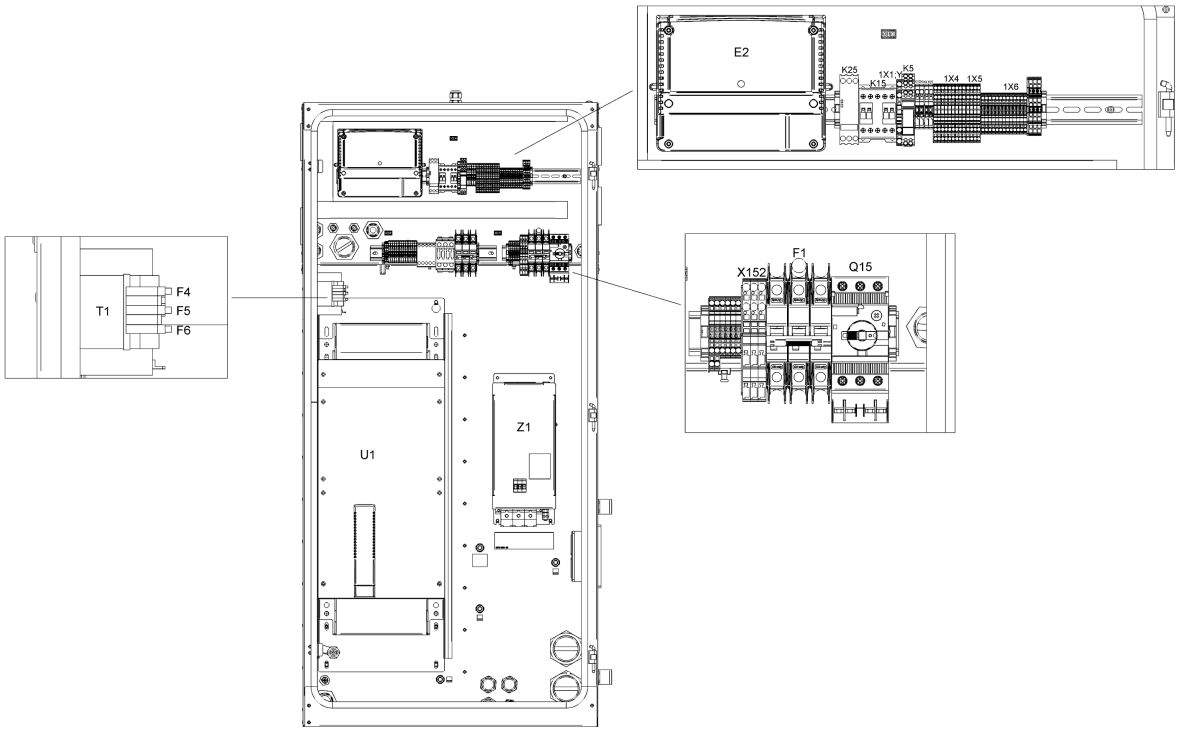

21.16 - Cubicle components GA 90 VSD+ - (200V-380V-460V/60Hz - IEC, 230V-460V-575V/60Hz - UL-cUL, 200V-400V-500V/50Hz - IEC) - Pack (17/12/2019 - ...)

((((CAPPRM:AS1210 , CAPPRM:CE , CAPPRM:MHLW , CAPPRM:MOM) + MOVOL:400V , CAPPRM:CE + COOL:AIR + MOVOL:500V) + FREQ:50HZ , ((MOVOL:380V , MOVOL:460V) + CAPPRM:ASME , CAPPRM:MHLW + MOVOL:460V) + FREQ:60HZ , CAPPRM:MHLW + COOL:AIR + MOVOL:200V) + CAPPRE:IEC , ((MOVOL:230V , MOVOL:575V) + COOL:AIR , MOVOL:460V) + CAPPRE:ULCUL + CAPPRM:ASME + FREQ:60HZ) + IDRY:N + MODEL:GA90VP_16

Ref	Part Number	Qty	Name	Validity	EL
	1088 0039 35	1	PLATE	**(25/02/2019 - 05/12/2019)** ((((MOVOL:380V , MOVOL:460V) + CAPPRM:ASME , CAPPRM:MHLW + MOVOL:460V) + FREQ:60HZ , (CAPPRM:AS1210 , CAPPRM:CE , CAPPRM:MHLW , CAPPRM:MOM) + FREQ:50HZ + MOVOL:400V) + CAPPRE:IEC , CAPPRE:ULCUL + CAPPRM:ASME + FREQ:60HZ + MOVOL:460V) + COOL:WATER **(06/12/2019 - 16/12/2019)** (((((MOVOL:380V , MOVOL:460V) + CAPPRM:ASME , CAPPRM:MHLW + MOVOL:460V) + FREQ:60HZ , (CAPPRM:AS1210 , CAPPRM:CE , CAPPRM:MHLW , CAPPRM:MOM) + FREQ:50HZ + MOVOL:400V) + COOL:WATER , CAPPRM:CE + COOL:AIR + FREQ:50HZ + MOVOL:500V) + CAPPRE:IEC , CAPPRE:ULCUL + CAPPRM:ASME + COOL:WATER + FREQ:60HZ + MOVOL:460V) **(17/12/2019 - ...)**	1X11
	1088 0039 04	2	TERMINAL	**(25/02/2019 - 05/12/2019)** ((((MOVOL:380V , MOVOL:460V) + CAPPRM:ASME , CAPPRM:MHLW + MOVOL:460V) + FREQ:60HZ , (CAPPRM:AS1210 , CAPPRM:CE , CAPPRM:MHLW , CAPPRM:MOM) + FREQ:50HZ + MOVOL:400V) + CAPPRE:IEC , CAPPRE:ULCUL + CAPPRM:ASME + FREQ:60HZ + MOVOL:460V) + COOL:WATER **(06/12/2019 - 16/12/2019)** (((((MOVOL:380V , MOVOL:460V) + CAPPRM:ASME , CAPPRM:MHLW + MOVOL:460V) + FREQ:60HZ , (CAPPRM:AS1210 , CAPPRM:CE , CAPPRM:MHLW , CAPPRM:MOM) + FREQ:50HZ + MOVOL:400V) + COOL:WATER , CAPPRM:CE + COOL:AIR + FREQ:50HZ + MOVOL:500V) + CAPPRE:IEC , CAPPRE:ULCUL + CAPPRM:ASME + COOL:WATER + FREQ:60HZ + MOVOL:460V) **(17/12/2019 - ...)**	X104a
	1088 0037 99	2	PIN	**(25/02/2019 - 05/12/2019)** ((((MOVOL:380V , MOVOL:460V) + CAPPRM:ASME , CAPPRM:MHLW + MOVOL:460V) + FREQ:60HZ , (CAPPRM:AS1210 , CAPPRM:CE , CAPPRM:MHLW , CAPPRM:MOM) + FREQ:50HZ + MOVOL:400V) + CAPPRE:IEC , CAPPRE:ULCUL + CAPPRM:ASME + FREQ:60HZ + MOVOL:460V) + COOL:WATER **(06/12/2019 - 16/12/2019)** (((((MOVOL:380V , MOVOL:460V) + CAPPRM:ASME , CAPPRM:MHLW + MOVOL:460V) + FREQ:60HZ , (CAPPRM:AS1210 , CAPPRM:CE , CAPPRM:MHLW , CAPPRM:MOM) + FREQ:50HZ + MOVOL:400V) + COOL:WATER , CAPPRM:CE + COOL:AIR + FREQ:50HZ + MOVOL:500V) + CAPPRE:IEC , CAPPRE:ULCUL + CAPPRM:ASME + COOL:WATER + FREQ:60HZ + MOVOL:460V) **(17/12/2019 - ...)**	X104a/X105

Legend:

CAPPRE:IEC - Component approval electrical:IEC
CAPPRM:ASME - Component approval mechanical:ASME
CAPPRM:MOM - Component approval mechanical:MOM
FREQ:50HZ - Frequency:50 Hz
MODEL:GA90VP_16 - Model:GA 90VSD+
MOVOL:380V - Supply voltage:380 V
MOVOL:500V - Supply voltage:500 V
CAPPRE:ULCUL - Component approval electrical:UL/cUL
CAPPRM:CE - Component approval mechanical:CE
COOL:AIR - Cooling:Air cooled
FREQ:60HZ - Frequency:60 Hz
MOVOL:200V - Supply voltage:200 V
MOVOL:400V - Supply voltage:400 V
MOVOL:575V - Supply voltage:575 V
CAPPRM:AS1210 - Component approval mechanical:AS1210
CAPPRM:MHLW - Component approval mechanical:MHLW
COOL:WATER - Cooling:Water cooled
IDRY:N - Integrated dryer:No
MOVOL:230V - Supply voltage:230 V
MOVOL:460V - Supply voltage:460 V

21.16 - Cubicle components GA 90 VSD+ - (200V-380V-460V/60Hz - IEC, 230V-460V-575V/60Hz - UL-cUL, 200V-400V-500V/50Hz - IEC) - Pack (17/12/2019 - ...)

((((CAPPRM:AS1210 , CAPPRM:CE , CAPPRM:MHLW , CAPPRM:MOM) + MOVOL:400V , CAPPRM:CE + COOL:AIR + MOVOL:500V) + FREQ:50HZ , ((MOVOL:380V , MOVOL:460V) + CAPPRM:ASME , CAPPRM:MHLW + MOVOL:460V) + FREQ:60HZ , CAPPRM:MHLW + COOL:AIR + MOVOL:200V) + CAPPRE:IEC , ((MOVOL:230V , MOVOL:575V) + COOL:AIR , MOVOL:460V) + CAPPRE:ULCUL + CAPPRM:ASME + FREQ:60HZ) + IDRY:N + MODEL:GA90VP_16

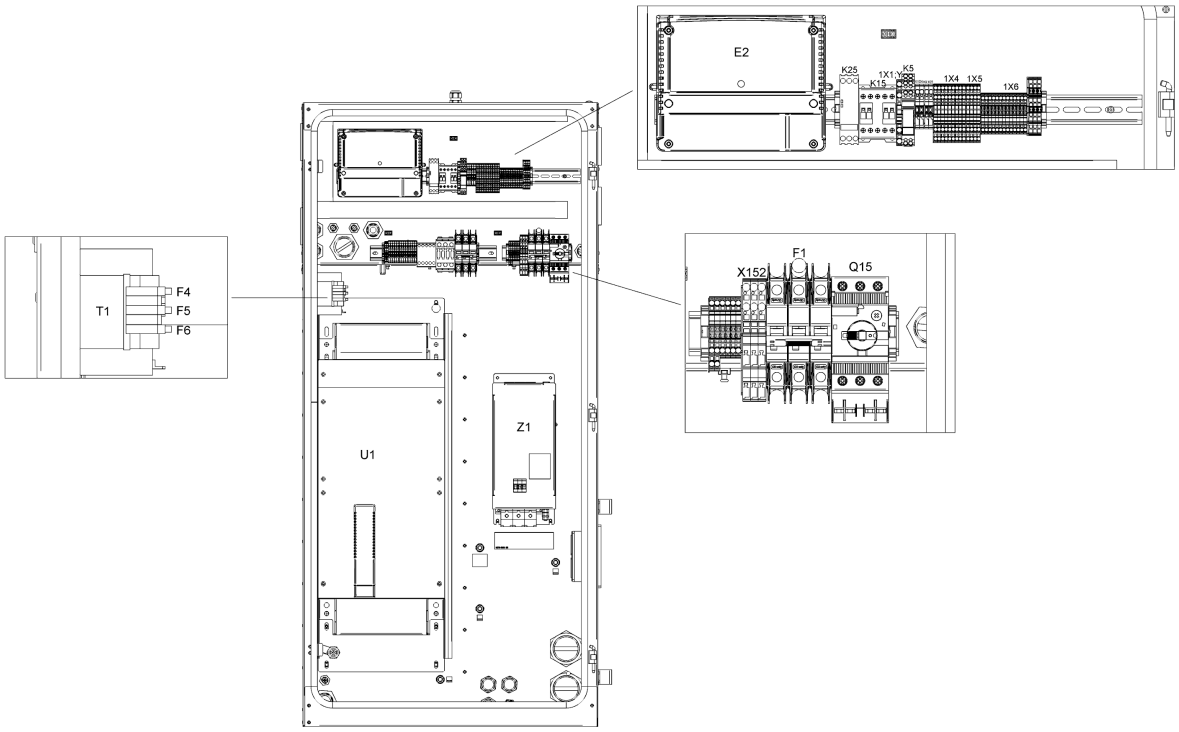

21.16 - Cubicle components GA 90 VSD+ - (200V-380V-460V/60Hz - IEC, 230V-460V-575V/60Hz - UL-cUL, 200V-400V-500V/50Hz - IEC) - Pack (17/12/2019 - ...)

((((CAPPRM:AS1210 , CAPPRM:CE , CAPPRM:MHLW , CAPPRM:MOM) + MOVOL:400V , CAPPRM:CE + COOL:AIR + MOVOL:500V) + FREQ:50HZ , ((MOVOL:380V , MOVOL:460V) + CAPPRM:ASME , CAPPRM:MHLW + MOVOL:460V) + FREQ:60HZ , CAPPRM:MHLW + COOL:AIR + MOVOL:200V) + CAPPRE:IEC , ((MOVOL:230V , MOVOL:575V) + COOL:AIR , MOVOL:460V) + CAPPRE:ULCUL + CAPPRM:ASME + FREQ:60HZ) + IDRY:N + MODEL:GA90VP_16

Ref	Part Number	Qty	Name	Validity	EL
	1088 0039 02	1	PLATE	**(25/02/2019 - 05/12/2019)** ((((MOVOL:380V , MOVOL:460V) + CAPPRM:ASME , CAPPRM:MHLW + MOVOL:460V) + FREQ:60HZ , (CAPPRM:AS1210 , CAPPRM:CE , CAPPRM:MHLW , CAPPRM:MOM) + FREQ:50HZ + MOVOL:400V) + CAPPRE:IEC , CAPPRE:ULCUL + CAPPRM:ASME + FREQ:60HZ + MOVOL:460V) + COOL:WATER **(06/12/2019 - 16/12/2019)** (((((MOVOL:380V , MOVOL:460V) + CAPPRM:ASME , CAPPRM:MHLW + MOVOL:460V) + FREQ:60HZ , (CAPPRM:AS1210 , CAPPRM:CE , CAPPRM:MHLW , CAPPRM:MOM) + FREQ:50HZ + MOVOL:400V) + COOL:WATER , CAPPRM:CE + COOL:AIR + FREQ:50HZ + MOVOL:500V) + CAPPRE:IEC , CAPPRE:ULCUL + CAPPRM:ASME + COOL:WATER + FREQ:60HZ + MOVOL:460V) **(17/12/2019 - ...)**	X104a
	1088 0039 07	2	TERMINAL	**(25/02/2019 - 05/12/2019)** ((((MOVOL:380V , MOVOL:460V) + CAPPRM:ASME , CAPPRM:MHLW + MOVOL:460V) + FREQ:60HZ , (CAPPRM:AS1210 , CAPPRM:CE , CAPPRM:MHLW , CAPPRM:MOM) + FREQ:50HZ + MOVOL:400V) + CAPPRE:IEC , CAPPRE:ULCUL + CAPPRM:ASME + FREQ:60HZ + MOVOL:460V) + COOL:WATER **(06/12/2019 - 16/12/2019)** (((((MOVOL:380V , MOVOL:460V) + CAPPRM:ASME , CAPPRM:MHLW + MOVOL:460V) + FREQ:60HZ , (CAPPRM:AS1210 , CAPPRM:CE , CAPPRM:MHLW , CAPPRM:MOM) + FREQ:50HZ + MOVOL:400V) + COOL:WATER , CAPPRM:CE + COOL:AIR + FREQ:50HZ + MOVOL:500V) + CAPPRE:IEC , CAPPRE:ULCUL + CAPPRM:ASME + COOL:WATER + FREQ:60HZ + MOVOL:460V) **(17/12/2019 - ...)**	X105
	1088 0039 05	1	PLATE	**(25/02/2019 - 05/12/2019)** ((((MOVOL:380V , MOVOL:460V) + CAPPRM:ASME , CAPPRM:MHLW + MOVOL:460V) + FREQ:60HZ , (CAPPRM:AS1210 , CAPPRM:CE , CAPPRM:MHLW , CAPPRM:MOM) + FREQ:50HZ + MOVOL:400V) + CAPPRE:IEC , CAPPRE:ULCUL + CAPPRM:ASME + FREQ:60HZ + MOVOL:460V) + COOL:WATER **(06/12/2019 - 16/12/2019)** (((((MOVOL:380V , MOVOL:460V) + CAPPRM:ASME , CAPPRM:MHLW + MOVOL:460V) + FREQ:60HZ , (CAPPRM:AS1210 , CAPPRM:CE , CAPPRM:MHLW , CAPPRM:MOM) + FREQ:50HZ + MOVOL:400V) + COOL:WATER , CAPPRM:CE + COOL:AIR + FREQ:50HZ + MOVOL:500V) + CAPPRE:IEC , CAPPRE:ULCUL + CAPPRM:ASME + COOL:WATER + FREQ:60HZ + MOVOL:460V) **(17/12/2019 - ...)**	X105

Legend:

CAPPRE:IEC - Component approval electrical:IEC
CAPPRE:ULCUL - Component approval electrical:UL/cUL
CAPPRM:AS1210 - Component approval mechanical:AS1210
CAPPRM:ASME - Component approval mechanical:ASME
CAPPRM:CE - Component approval mechanical:CE
CAPPRM:MHLW - Component approval mechanical:MHLW
CAPPRM:MOM - Component approval mechanical:MOM
COOL:AIR - Cooling:Air cooled
COOL:WATER - Cooling:Water cooled
FREQ:50HZ - Frequency:50 Hz
FREQ:60HZ - Frequency:60 Hz
IDRY:N - Integrated dryer:No
MODEL:GA90VP_16 - Model:GA 90VSD+
MOVOL:200V - Supply voltage:200 V
MOVOL:230V - Supply voltage:230 V
MOVOL:380V - Supply voltage:380 V
MOVOL:400V - Supply voltage:400 V
MOVOL:460V - Supply voltage:460 V
MOVOL:500V - Supply voltage:500 V
MOVOL:575V - Supply voltage:575 V

21.16 - Cubicle components GA 90 VSD+ - (200V-380V-460V/60Hz - IEC, 230V-460V-575V/60Hz - UL-cUL, 200V-400V-500V/50Hz - IEC) - Pack (17/12/2019 - ...)

((((CAPPRM:AS1210 , CAPPRM:CE , CAPPRM:MHLW , CAPPRM:MOM) + MOVOL:400V , CAPPRM:CE + COOL:AIR + MOVOL:500V) + FREQ:50HZ , ((MOVOL:380V , MOVOL:460V) + CAPPRM:ASME , CAPPRM:MHLW + MOVOL:460V) + FREQ:60HZ , CAPPRM:MHLW + COOL:AIR + MOVOL:200V) + CAPPRE:IEC , ((MOVOL:230V , MOVOL:575V) + COOL:AIR , MOVOL:460V) + CAPPRE:ULCUL + CAPPRM:ASME + FREQ:60HZ) + IDRY:N + MODEL:GA90VP_16

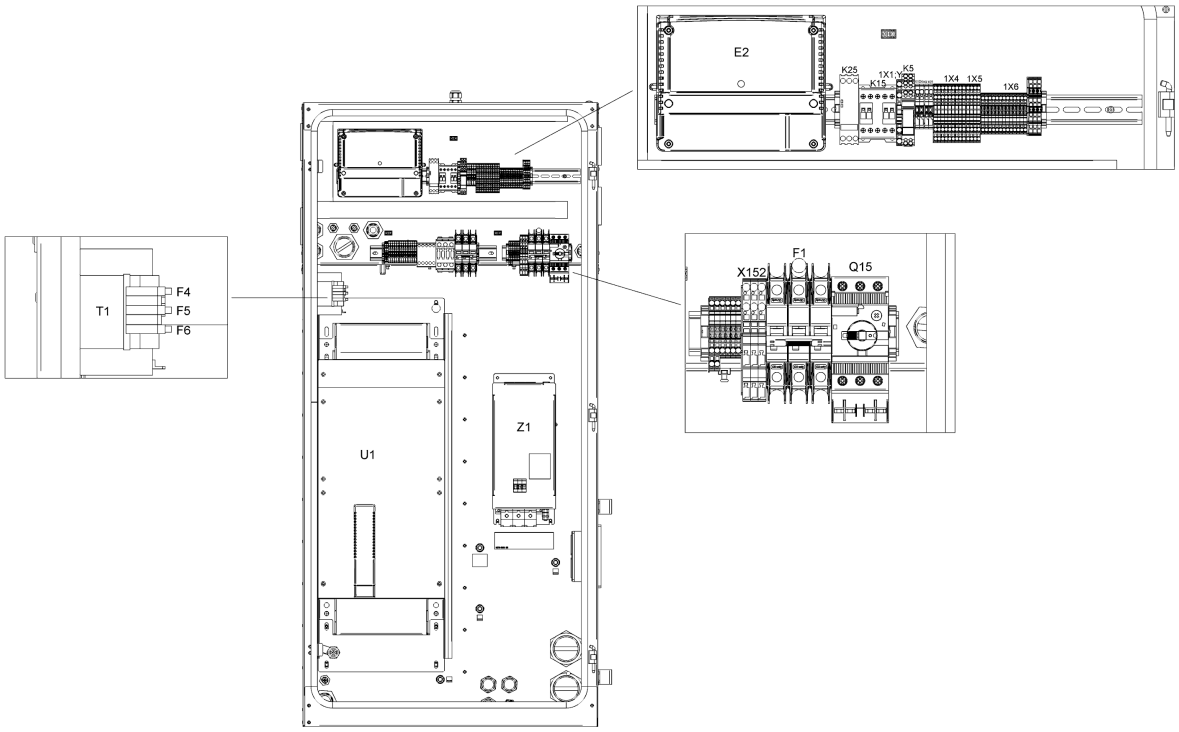

Ref	Part Number	Qty	Name	Validity	EL
	1088 0039 34	13	TERMINAL	**(25/02/2019 - 05/12/2019)** ((((MOVOL:380V , MOVOL:460V) + CAPPRM:ASME , CAPPRM:MHLW + MOVOL:460V) + FREQ:60HZ , (CAPPRM:AS1210 , CAPPRM:CE , CAPPRM:MHLW , CAPPRM:MOM) + FREQ:50HZ + MOVOL:400V) + CAPPRE:IEC , CAPPRE:ULCUL + CAPPRM:ASME + FREQ:60HZ + MOVOL:460V) + COOL:WATER **(06/12/2019 - 16/12/2019)** (((((MOVOL:380V , MOVOL:460V) + CAPPRM:ASME , CAPPRM:MHLW + MOVOL:460V) + FREQ:60HZ , (CAPPRM:AS1210 , CAPPRM:CE , CAPPRM:MHLW , CAPPRM:MOM) + FREQ:50HZ + MOVOL:400V) + COOL:WATER , CAPPRM:CE + COOL:AIR + FREQ:50HZ + MOVOL:500V) + CAPPRE:IEC , CAPPRE:ULCUL + CAPPRM:ASME + COOL:WATER + FREQ:60HZ + MOVOL:460V) **(17/12/2019 - ...)**	1X6
	1088 0037 69	3	CONNECTOR	**(25/02/2019 - 05/12/2019)** ((((MOVOL:380V , MOVOL:460V) + CAPPRM:ASME , CAPPRM:MHLW + MOVOL:460V) + FREQ:60HZ , (CAPPRM:AS1210 , CAPPRM:CE , CAPPRM:MHLW , CAPPRM:MOM) + FREQ:50HZ + MOVOL:400V) + CAPPRE:IEC , CAPPRE:ULCUL + CAPPRM:ASME + FREQ:60HZ + MOVOL:460V) + COOL:WATER **(06/12/2019 - 16/12/2019)** (((((MOVOL:380V , MOVOL:460V) + CAPPRM:ASME , CAPPRM:MHLW + MOVOL:460V) + FREQ:60HZ , (CAPPRM:AS1210 , CAPPRM:CE , CAPPRM:MHLW , CAPPRM:MOM) + FREQ:50HZ + MOVOL:400V) + COOL:WATER , CAPPRM:CE + COOL:AIR + FREQ:50HZ + MOVOL:500V) + CAPPRE:IEC , CAPPRE:ULCUL + CAPPRM:ASME + COOL:WATER + FREQ:60HZ + MOVOL:460V) **(17/12/2019 - ...)**	1X7
	1088 0039 35	1	PLATE	**(25/02/2019 - 05/12/2019)** ((((MOVOL:380V , MOVOL:460V) + CAPPRM:ASME , CAPPRM:MHLW + MOVOL:460V) + FREQ:60HZ , (CAPPRM:AS1210 , CAPPRM:CE , CAPPRM:MHLW , CAPPRM:MOM) + FREQ:50HZ + MOVOL:400V) + CAPPRE:IEC , CAPPRE:ULCUL + CAPPRM:ASME + FREQ:60HZ + MOVOL:460V) + COOL:WATER **(06/12/2019 - 16/12/2019)** (((((MOVOL:380V , MOVOL:460V) + CAPPRM:ASME , CAPPRM:MHLW + MOVOL:460V) + FREQ:60HZ , (CAPPRM:AS1210 , CAPPRM:CE , CAPPRM:MHLW , CAPPRM:MOM) + FREQ:50HZ + MOVOL:400V) + COOL:WATER , CAPPRM:CE + COOL:AIR + FREQ:50HZ + MOVOL:500V) + CAPPRE:IEC , CAPPRE:ULCUL + CAPPRM:ASME + COOL:WATER + FREQ:60HZ + MOVOL:460V) **(17/12/2019 - ...)**	1X6

Legend:

CAPPRE:IEC - Component approval electrical:IEC
CAPPRE:ULCUL - Component approval electrical:UL/cUL
CAPPRM:AS1210 - Component approval mechanical:AS1210
CAPPRM:ASME - Component approval mechanical:ASME
CAPPRM:CE - Component approval mechanical:CE
CAPPRM:MHLW - Component approval mechanical:MHLW
CAPPRM:MOM - Component approval mechanical:MOM
COOL:AIR - Cooling:Air cooled
COOL:WATER - Cooling:Water cooled
FREQ:50HZ - Frequency:50 Hz
FREQ:60HZ - Frequency:60 Hz
IDRY:N - Integrated dryer:No
MODEL:GA90VP_16 - Model:GA 90VSD+
MOVOL:200V - Supply voltage:200 V
MOVOL:230V - Supply voltage:230 V
MOVOL:380V - Supply voltage:380 V
MOVOL:400V - Supply voltage:400 V
MOVOL:460V - Supply voltage:460 V
MOVOL:500V - Supply voltage:500 V
MOVOL:575V - Supply voltage:575 V

21.16 - Cubicle components GA 90 VSD+ - (200V-380V-460V/60Hz - IEC, 230V-460V-575V/60Hz - UL-cUL, 200V-400V-500V/50Hz - IEC) - Pack (17/12/2019 - ...)

((((CAPPRM:AS1210 , CAPPRM:CE , CAPPRM:MHLW , CAPPRM:MOM) + MOVOL:400V , CAPPRM:CE + COOL:AIR + MOVOL:500V) + FREQ:50HZ , ((MOVOL:380V , MOVOL:460V) + CAPPRM:ASME , CAPPRM:MHLW + MOVOL:460V) + FREQ:60HZ , CAPPRM:MHLW + COOL:AIR + MOVOL:200V) + CAPPRE:IEC , ((MOVOL:230V , MOVOL:575V) + COOL:AIR , MOVOL:460V) + CAPPRE:ULCUL + CAPPRM:ASME + FREQ:60HZ) + IDRY:N + MODEL:GA90VP_16

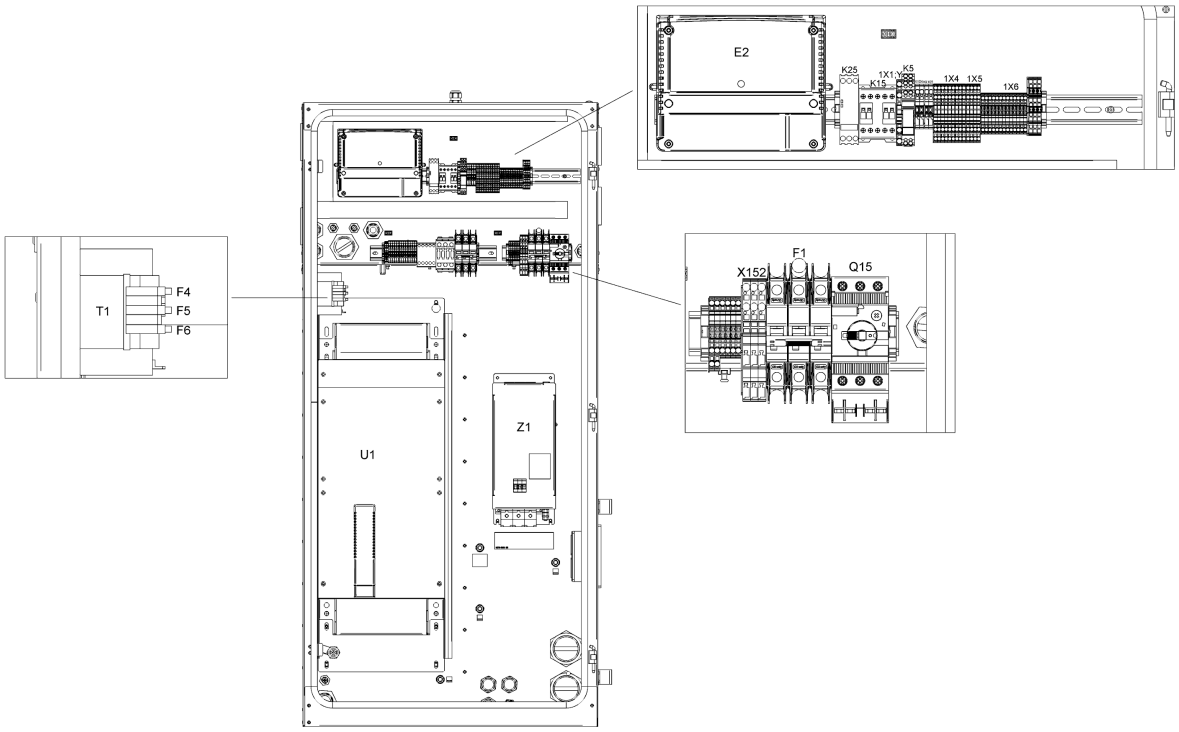

21.16 - Cubicle components GA 90 VSD+ - (200V-380V-460V/60Hz - IEC, 230V-460V-575V/60Hz - UL-cUL, 200V-400V-500V/50Hz - IEC) - Pack (17/12/2019 - ...)

((((CAPPRM:AS1210 , CAPPRM:CE , CAPPRM:MHLW , CAPPRM:MOM) + MOVOL:400V , CAPPRM:CE + COOL:AIR + MOVOL:500V) + FREQ:50HZ , ((MOVOL:380V , MOVOL:460V) + CAPPRM:ASME , CAPPRM:MHLW + MOVOL:460V) + FREQ:60HZ , CAPPRM:MHLW + COOL:AIR + MOVOL:200V) + CAPPRE:IEC , ((MOVOL:230V , MOVOL:575V) + COOL:AIR , MOVOL:460V) + CAPPRE:ULCUL + CAPPRM:ASME + FREQ:60HZ) + IDRY:N + MODEL:GA90VP_16

Ref	Part Number	Qty	Name	Validity	EL
	1088 0040 37	1	END PLATE	**(25/02/2019 - 05/12/2019)** ((((MOVOL:380V , MOVOL:460V) + CAPPRM:ASME , CAPPRM:MHLW + MOVOL:460V) + FREQ:60HZ , (CAPPRM:AS1210 , CAPPRM:CE , CAPPRM:MHLW , CAPPRM:MOM) + FREQ:50HZ + MOVOL:400V) + CAPPRE:IEC , CAPPRE:ULCUL + CAPPRM:ASME + FREQ:60HZ + MOVOL:460V) + COOL:WATER **(06/12/2019 - 16/12/2019)** (((((MOVOL:380V , MOVOL:460V) + CAPPRM:ASME , CAPPRM:MHLW + MOVOL:460V) + FREQ:60HZ , (CAPPRM:AS1210 , CAPPRM:CE , CAPPRM:MHLW , CAPPRM:MOM) + FREQ:50HZ + MOVOL:400V) + COOL:WATER , CAPPRM:CE + COOL:AIR + FREQ:50HZ + MOVOL:500V) + CAPPRE:IEC , CAPPRE:ULCUL + CAPPRM:ASME + COOL:WATER + FREQ:60HZ + MOVOL:460V) **(17/12/2019 - ...)**	1X7
	1088 0039 36	9	TERMINAL	**(25/02/2019 - 05/12/2019)** ((((MOVOL:380V , MOVOL:460V) + CAPPRM:ASME , CAPPRM:MHLW + MOVOL:460V) + FREQ:60HZ , (CAPPRM:AS1210 , CAPPRM:CE , CAPPRM:MHLW , CAPPRM:MOM) + FREQ:50HZ + MOVOL:400V) + CAPPRE:IEC , CAPPRE:ULCUL + CAPPRM:ASME + FREQ:60HZ + MOVOL:460V) + COOL:WATER **(06/12/2019 - 16/12/2019)** (((((MOVOL:380V , MOVOL:460V) + CAPPRM:ASME , CAPPRM:MHLW + MOVOL:460V) + FREQ:60HZ , (CAPPRM:AS1210 , CAPPRM:CE , CAPPRM:MHLW , CAPPRM:MOM) + FREQ:50HZ + MOVOL:400V) + COOL:WATER , CAPPRM:CE + COOL:AIR + FREQ:50HZ + MOVOL:500V) + CAPPRE:IEC , CAPPRE:ULCUL + CAPPRM:ASME + COOL:WATER + FREQ:60HZ + MOVOL:460V) **(17/12/2019 - ...)**	1X4
	1088 0039 36	4	TERMINAL	**(25/02/2019 - 05/12/2019)** ((((MOVOL:380V , MOVOL:460V) + CAPPRM:ASME , CAPPRM:MHLW + MOVOL:460V) + FREQ:60HZ , (CAPPRM:AS1210 , CAPPRM:CE , CAPPRM:MHLW , CAPPRM:MOM) + FREQ:50HZ + MOVOL:400V) + CAPPRE:IEC , CAPPRE:ULCUL + CAPPRM:ASME + FREQ:60HZ + MOVOL:460V) + COOL:WATER **(06/12/2019 - 16/12/2019)** (((((MOVOL:380V , MOVOL:460V) + CAPPRM:ASME , CAPPRM:MHLW + MOVOL:460V) + FREQ:60HZ , (CAPPRM:AS1210 , CAPPRM:CE , CAPPRM:MHLW , CAPPRM:MOM) + FREQ:50HZ + MOVOL:400V) + COOL:WATER , CAPPRM:CE + COOL:AIR + FREQ:50HZ + MOVOL:500V) + CAPPRE:IEC , CAPPRE:ULCUL + CAPPRM:ASME + COOL:WATER + FREQ:60HZ + MOVOL:460V) **(17/12/2019 - ...)**	1X6

Legend:

CAPPRE:IEC - Component approval electrical:IEC
CAPPRE:ULCUL - Component approval electrical:UL/cUL
CAPPRM:AS1210 - Component approval mechanical:AS1210
CAPPRM:ASME - Component approval mechanical:ASME
CAPPRM:CE - Component approval mechanical:CE
CAPPRM:MHLW - Component approval mechanical:MHLW
CAPPRM:MOM - Component approval mechanical:MOM
COOL:AIR - Cooling:Air cooled
COOL:WATER - Cooling:Water cooled
FREQ:50HZ - Frequency:50 Hz
FREQ:60HZ - Frequency:60 Hz
IDRY:N - Integrated dryer:No
MODEL:GA90VP_16 - Model:GA 90VSD+
MOVOL:200V - Supply voltage:200 V
MOVOL:230V - Supply voltage:230 V
MOVOL:380V - Supply voltage:380 V
MOVOL:400V - Supply voltage:400 V
MOVOL:460V - Supply voltage:460 V
MOVOL:500V - Supply voltage:500 V
MOVOL:575V - Supply voltage:575 V

21.16 - Cubicle components GA 90 VSD+ - (200V-380V-460V/60Hz - IEC, 230V-460V-575V/60Hz - UL-cUL, 200V-400V-500V/50Hz - IEC) - Pack (17/12/2019 - ...)

((((CAPPRM:AS1210 , CAPPRM:CE , CAPPRM:MHLW , CAPPRM:MOM) + MOVOL:400V , CAPPRM:CE + COOL:AIR + MOVOL:500V) + FREQ:50HZ , ((MOVOL:380V , MOVOL:460V) + CAPPRM:ASME , CAPPRM:MHLW + MOVOL:460V) + FREQ:60HZ , CAPPRM:MHLW + COOL:AIR + MOVOL:200V) + CAPPRE:IEC , ((MOVOL:230V , MOVOL:575V) + COOL:AIR , MOVOL:460V) + CAPPRE:ULCUL + CAPPRM:ASME + FREQ:60HZ) + IDRY:N + MODEL:GA90VP_16

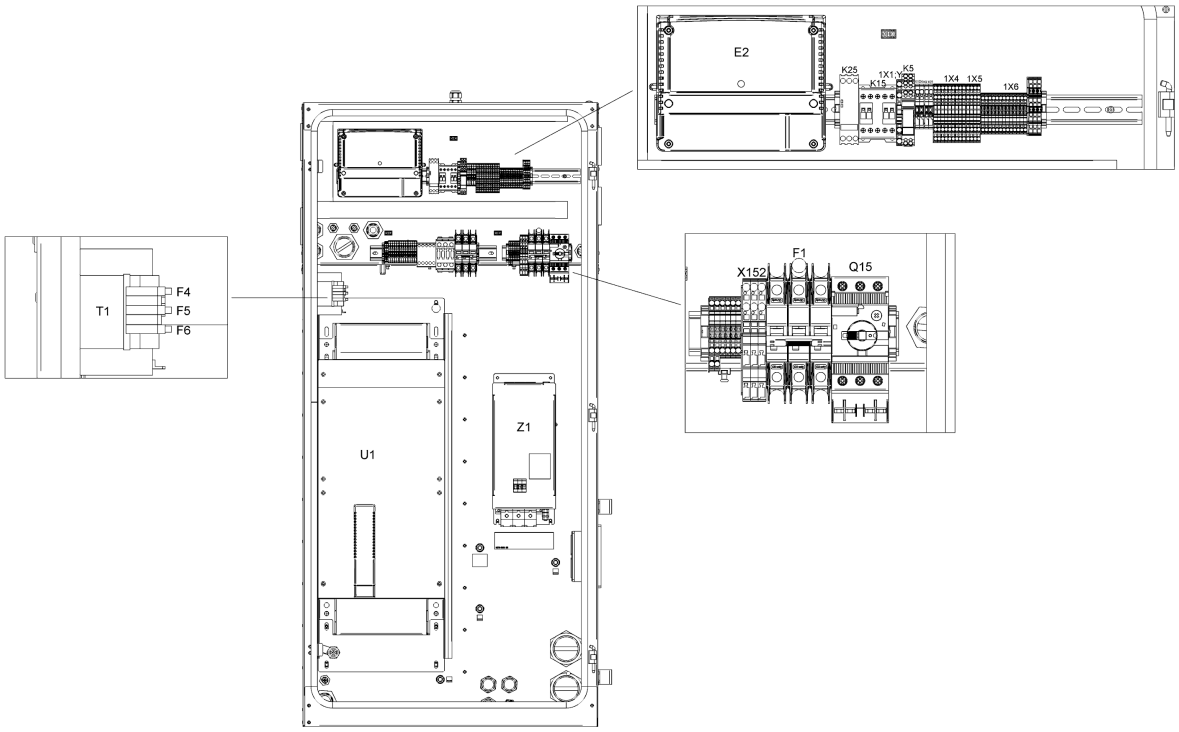

21.16 - Cubicle components GA 90 VSD+ - (200V-380V-460V/60Hz - IEC, 230V-460V-575V/60Hz - UL-cUL, 200V-400V-500V/50Hz - IEC) - Pack (17/12/2019 - ...)

((((CAPPRM:AS1210 , CAPPRM:CE , CAPPRM:MHLW , CAPPRM:MOM) + MOVOL:400V , CAPPRM:CE + COOL:AIR + MOVOL:500V) + FREQ:50HZ , ((MOVOL:380V , MOVOL:460V) + CAPPRM:ASME , CAPPRM:MHLW + MOVOL:460V) + FREQ:60HZ , CAPPRM:MHLW + COOL:AIR + MOVOL:200V) + CAPPRE:IEC , ((MOVOL:230V , MOVOL:575V) + COOL:AIR , MOVOL:460V) + CAPPRE:ULCUL + CAPPRM:ASME + FREQ:60HZ) + IDRY:N + MODEL:GA90VP_16

Ref	Part Number	Qty	Name	Validity	EL
	1088 0039 37	1	END PLATE	**(25/02/2019 - 05/12/2019)** ((((MOVOL:380V , MOVOL:460V) + CAPPRM:ASME , CAPPRM:MHLW + MOVOL:460V) + FREQ:60HZ , (CAPPRM:AS1210 , CAPPRM:CE , CAPPRM:MHLW , CAPPRM:MOM) + FREQ:50HZ + MOVOL:400V) + CAPPRE:IEC , CAPPRE:ULCUL + CAPPRM:ASME + FREQ:60HZ + MOVOL:460V) + COOL:WATER **(06/12/2019 - 16/12/2019)** (((((MOVOL:380V , MOVOL:460V) + CAPPRM:ASME , CAPPRM:MHLW + MOVOL:460V) + FREQ:60HZ , (CAPPRM:AS1210 , CAPPRM:CE , CAPPRM:MHLW , CAPPRM:MOM) + FREQ:50HZ + MOVOL:400V) + COOL:WATER , CAPPRM:CE + COOL:AIR + FREQ:50HZ + MOVOL:500V) + CAPPRE:IEC , CAPPRE:ULCUL + CAPPRM:ASME + COOL:WATER + FREQ:60HZ + MOVOL:460V) **(17/12/2019 - ...)**	1X4
	1088 0039 37	1	END PLATE	**(25/02/2019 - 05/12/2019)** ((((MOVOL:380V , MOVOL:460V) + CAPPRM:ASME , CAPPRM:MHLW + MOVOL:460V) + FREQ:60HZ , (CAPPRM:AS1210 , CAPPRM:CE , CAPPRM:MHLW , CAPPRM:MOM) + FREQ:50HZ + MOVOL:400V) + CAPPRE:IEC , CAPPRE:ULCUL + CAPPRM:ASME + FREQ:60HZ + MOVOL:460V) + COOL:WATER **(06/12/2019 - 16/12/2019)** (((((MOVOL:380V , MOVOL:460V) + CAPPRM:ASME , CAPPRM:MHLW + MOVOL:460V) + FREQ:60HZ , (CAPPRM:AS1210 , CAPPRM:CE , CAPPRM:MHLW , CAPPRM:MOM) + FREQ:50HZ + MOVOL:400V) + COOL:WATER , CAPPRM:CE + COOL:AIR + FREQ:50HZ + MOVOL:500V) + CAPPRE:IEC , CAPPRE:ULCUL + CAPPRM:ASME + COOL:WATER + FREQ:60HZ + MOVOL:460V) **(17/12/2019 - ...)**	1X6
	1088 0039 37	1	END PLATE	**(25/02/2019 - 05/12/2019)** ((((MOVOL:380V , MOVOL:460V) + CAPPRM:ASME , CAPPRM:MHLW + MOVOL:460V) + FREQ:60HZ , (CAPPRM:AS1210 , CAPPRM:CE , CAPPRM:MHLW , CAPPRM:MOM) + FREQ:50HZ + MOVOL:400V) + CAPPRE:IEC , CAPPRE:ULCUL + CAPPRM:ASME + FREQ:60HZ + MOVOL:460V) + COOL:WATER **(06/12/2019 - 16/12/2019)** (((((MOVOL:380V , MOVOL:460V) + CAPPRM:ASME , CAPPRM:MHLW + MOVOL:460V) + FREQ:60HZ , (CAPPRM:AS1210 , CAPPRM:CE , CAPPRM:MHLW , CAPPRM:MOM) + FREQ:50HZ + MOVOL:400V) + COOL:WATER , CAPPRM:CE + COOL:AIR + FREQ:50HZ + MOVOL:500V) + CAPPRE:IEC , CAPPRE:ULCUL + CAPPRM:ASME + COOL:WATER + FREQ:60HZ + MOVOL:460V) **(17/12/2019 - ...)**	1X1:Y/D

Legend:

CAPPRE:IEC - Component approval electrical:IEC
CAPPRE:ULCUL - Component approval electrical:UL/cUL
CAPPRM:AS1210 - Component approval mechanical:AS1210
CAPPRM:ASME - Component approval mechanical:ASME
CAPPRM:CE - Component approval mechanical:CE
CAPPRM:MHLW - Component approval mechanical:MHLW
CAPPRM:MOM - Component approval mechanical:MOM
COOL:AIR - Cooling:Air cooled
COOL:WATER - Cooling:Water cooled
FREQ:50HZ - Frequency:50 Hz
FREQ:60HZ - Frequency:60 Hz
IDRY:N - Integrated dryer:No
MODEL:GA90VP_16 - Model:GA 90VSD+
MOVOL:200V - Supply voltage:200 V
MOVOL:230V - Supply voltage:230 V
MOVOL:380V - Supply voltage:380 V
MOVOL:400V - Supply voltage:400 V
MOVOL:460V - Supply voltage:460 V
MOVOL:500V - Supply voltage:500 V
MOVOL:575V - Supply voltage:575 V

21.16 - Cubicle components GA 90 VSD+ - (200V-380V-460V/60Hz - IEC, 230V-460V-575V/60Hz - UL-cUL, 200V-400V-500V/50Hz - IEC) - Pack (17/12/2019 - ...)

((((CAPPRM:AS1210 , CAPPRM:CE , CAPPRM:MHLW , CAPPRM:MOM) + MOVOL:400V , CAPPRM:CE + COOL:AIR + MOVOL:500V) + FREQ:50HZ , ((MOVOL:380V , MOVOL:460V) + CAPPRM:ASME , CAPPRM:MHLW + MOVOL:460V) + FREQ:60HZ , CAPPRM:MHLW + COOL:AIR + MOVOL:200V) + CAPPRE:IEC , ((MOVOL:230V , MOVOL:575V) + COOL:AIR , MOVOL:460V) + CAPPRE:ULCUL + CAPPRM:ASME + FREQ:60HZ) + IDRY:N + MODEL:GA90VP_16

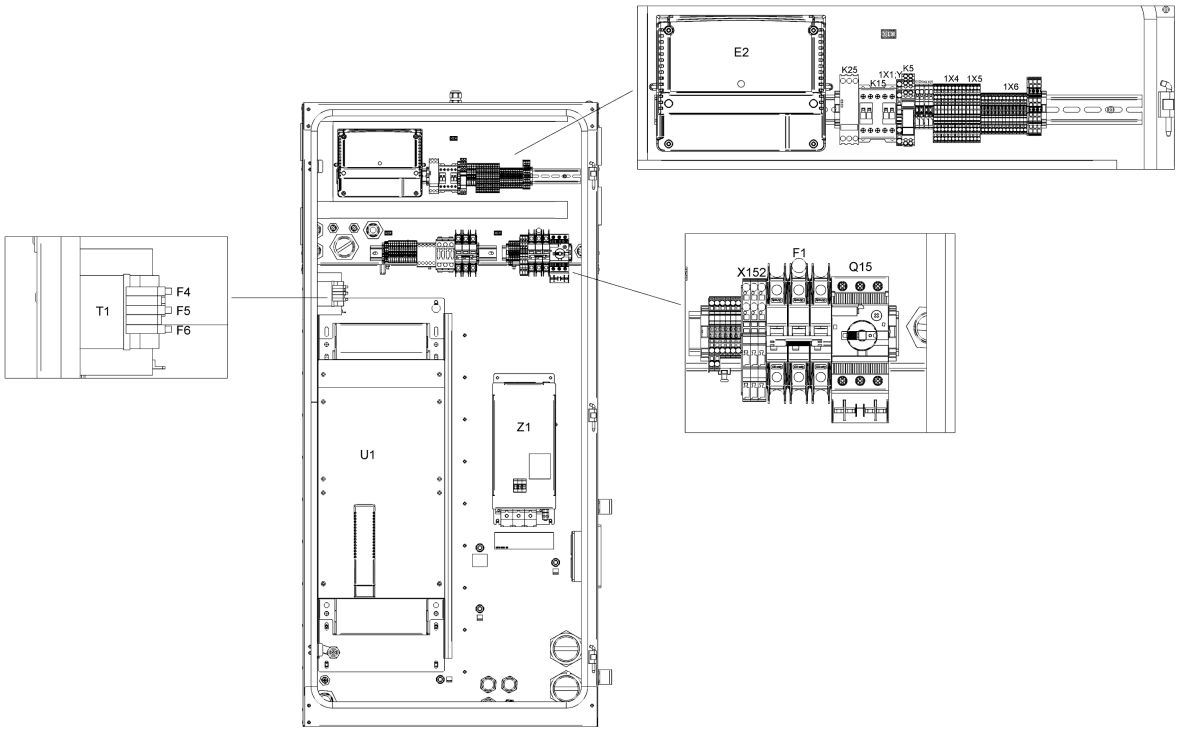

21.16 - Cubicle components GA 90 VSD+ - (200V-380V-460V/60Hz - IEC, 230V-460V-575V/60Hz - UL-cUL, 200V-400V-500V/50Hz - IEC) - Pack (17/12/2019 - ...)

((((CAPPRM:AS1210 , CAPPRM:CE , CAPPRM:MHLW , CAPPRM:MOM) + MOVOL:400V , CAPPRM:CE + COOL:AIR + MOVOL:500V) + FREQ:50HZ , ((MOVOL:380V , MOVOL:460V) + CAPPRM:ASME , CAPPRM:MHLW + MOVOL:460V) + FREQ:60HZ , CAPPRM:MHLW + COOL:AIR + MOVOL:200V) + CAPPRE:IEC , ((MOVOL:230V , MOVOL:575V) + COOL:AIR , MOVOL:460V) + CAPPRE:ULCUL + CAPPRM:ASME + FREQ:60HZ) + IDRY:N + MODEL:GA90VP_16

Ref	Part Number	Qty	Name	Validity	EL
	1088 0037 81	1	CONNECTOR	**(25/02/2019 - 05/12/2019)** ((((MOVOL:380V , MOVOL:460V) + CAPPRM:ASME , CAPPRM:MHLW + MOVOL:460V) + FREQ:60HZ , (CAPPRM:AS1210 , CAPPRM:CE , CAPPRM:MHLW , CAPPRM:MOM) + FREQ:50HZ + MOVOL:400V) + CAPPRE:IEC , CAPPRE:ULCUL + CAPPRM:ASME + FREQ:60HZ + MOVOL:460V) + COOL:WATER **(06/12/2019 - 16/12/2019)** (((((MOVOL:380V , MOVOL:460V) + CAPPRM:ASME , CAPPRM:MHLW + MOVOL:460V) + FREQ:60HZ , (CAPPRM:AS1210 , CAPPRM:CE , CAPPRM:MHLW , CAPPRM:MOM) + FREQ:50HZ + MOVOL:400V) + COOL:WATER , CAPPRM:CE + COOL:AIR + FREQ:50HZ + MOVOL:500V) + CAPPRE:IEC , CAPPRE:ULCUL + CAPPRM:ASME + COOL:WATER + FREQ:60HZ + MOVOL:460V) **(17/12/2019 - ...)**	2X27
	1088 0037 80	1	CONNECTOR	**(25/02/2019 - 05/12/2019)** ((((MOVOL:380V , MOVOL:460V) + CAPPRM:ASME , CAPPRM:MHLW + MOVOL:460V) + FREQ:60HZ , (CAPPRM:AS1210 , CAPPRM:CE , CAPPRM:MHLW , CAPPRM:MOM) + FREQ:50HZ + MOVOL:400V) + CAPPRE:IEC , CAPPRE:ULCUL + CAPPRM:ASME + FREQ:60HZ + MOVOL:460V) + COOL:WATER **(06/12/2019 - 16/12/2019)** (((((MOVOL:380V , MOVOL:460V) + CAPPRM:ASME , CAPPRM:MHLW + MOVOL:460V) + FREQ:60HZ , (CAPPRM:AS1210 , CAPPRM:CE , CAPPRM:MHLW , CAPPRM:MOM) + FREQ:50HZ + MOVOL:400V) + COOL:WATER , CAPPRM:CE + COOL:AIR + FREQ:50HZ + MOVOL:500V) + CAPPRE:IEC , CAPPRE:ULCUL + CAPPRM:ASME + COOL:WATER + FREQ:60HZ + MOVOL:460V) **(17/12/2019 - ...)**	2X28
	1088 0031 32	1	CONNECTOR	**(25/02/2019 - 05/12/2019)** ((((MOVOL:380V , MOVOL:460V) + CAPPRM:ASME , CAPPRM:MHLW + MOVOL:460V) + FREQ:60HZ , (CAPPRM:AS1210 , CAPPRM:CE , CAPPRM:MHLW , CAPPRM:MOM) + FREQ:50HZ + MOVOL:400V) + CAPPRE:IEC , CAPPRE:ULCUL + CAPPRM:ASME + FREQ:60HZ + MOVOL:460V) + COOL:WATER **(06/12/2019 - 16/12/2019)** (((((MOVOL:380V , MOVOL:460V) + CAPPRM:ASME , CAPPRM:MHLW + MOVOL:460V) + FREQ:60HZ , (CAPPRM:AS1210 , CAPPRM:CE , CAPPRM:MHLW , CAPPRM:MOM) + FREQ:50HZ + MOVOL:400V) + COOL:WATER , CAPPRM:CE + COOL:AIR + FREQ:50HZ + MOVOL:500V) + CAPPRE:IEC , CAPPRE:ULCUL + CAPPRM:ASME + COOL:WATER + FREQ:60HZ + MOVOL:460V) **(17/12/2019 - ...)**	2X30

Legend:

CAPPRE:IEC - Component approval electrical:IEC
CAPPRE:ULCUL - Component approval electrical:UL/cUL
CAPPRM:AS1210 - Component approval mechanical:AS1210
CAPPRM:ASME - Component approval mechanical:ASME
CAPPRM:CE - Component approval mechanical:CE
CAPPRM:MHLW - Component approval mechanical:MHLW
CAPPRM:MOM - Component approval mechanical:MOM
COOL:AIR - Cooling:Air cooled
COOL:WATER - Cooling:Water cooled
FREQ:50HZ - Frequency:50 Hz
FREQ:60HZ - Frequency:60 Hz
IDRY:N - Integrated dryer:No
MODEL:GA90VP_16 - Model:GA 90VSD+
MOVOL:200V - Supply voltage:200 V
MOVOL:230V - Supply voltage:230 V
MOVOL:380V - Supply voltage:380 V
MOVOL:400V - Supply voltage:400 V
MOVOL:460V - Supply voltage:460 V
MOVOL:500V - Supply voltage:500 V
MOVOL:575V - Supply voltage:575 V

21.16 - Cubicle components GA 90 VSD+ - (200V-380V-460V/60Hz - IEC, 230V-460V-575V/60Hz - UL-cUL, 200V-400V-500V/50Hz - IEC) - Pack (17/12/2019 - ...)

((((CAPPRM:AS1210 , CAPPRM:CE , CAPPRM:MHLW , CAPPRM:MOM) + MOVOL:400V , CAPPRM:CE + COOL:AIR + MOVOL:500V) + FREQ:50HZ , ((MOVOL:380V , MOVOL:460V) + CAPPRM:ASME , CAPPRM:MHLW + MOVOL:460V) + FREQ:60HZ , CAPPRM:MHLW + COOL:AIR + MOVOL:200V) + CAPPRE:IEC , ((MOVOL:230V , MOVOL:575V) + COOL:AIR , MOVOL:460V) + CAPPRE:ULCUL + CAPPRM:ASME + FREQ:60HZ) + IDRY:N + MODEL:GA90VP_16

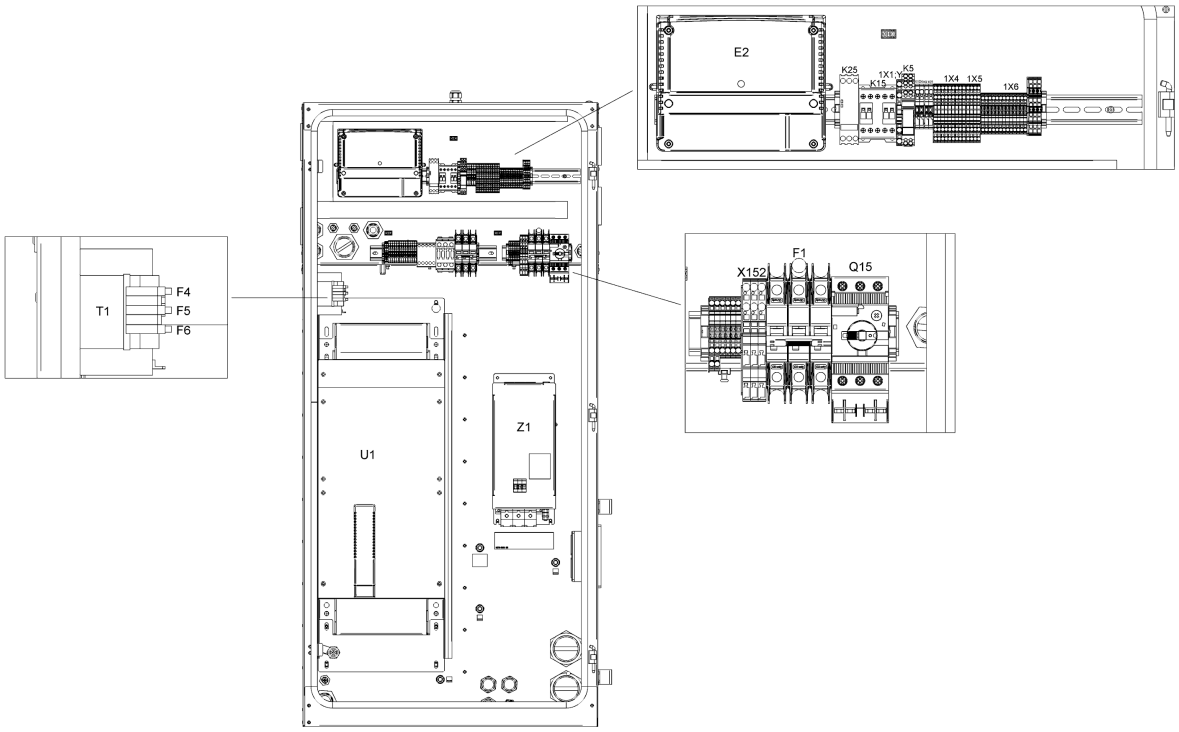

21.16 - Cubicle components GA 90 VSD+ - (200V-380V-460V/60Hz - IEC, 230V-460V-575V/60Hz - UL-cUL, 200V-400V-500V/50Hz - IEC) - Pack (17/12/2019 - ...)

((((CAPPRM:AS1210 , CAPPRM:CE , CAPPRM:MHLW , CAPPRM:MOM) + MOVOL:400V , CAPPRM:CE + COOL:AIR + MOVOL:500V) + FREQ:50HZ , ((MOVOL:380V , MOVOL:460V) + CAPPRM:ASME , CAPPRM:MHLW + MOVOL:460V) + FREQ:60HZ , CAPPRM:MHLW + COOL:AIR + MOVOL:200V) + CAPPRE:IEC , ((MOVOL:230V , MOVOL:575V) + COOL:AIR , MOVOL:460V) + CAPPRE:ULCUL + CAPPRM:ASME + FREQ:60HZ) + IDRY:N + MODEL:GA90VP_16

Ref	Part Number	Qty	Name	Validity	EL
	1088 0031 26	1	CONNECTOR 6-POLE	**(25/02/2019 - 05/12/2019)** ((((MOVOL:380V , MOVOL:460V) + CAPPRM:ASME , CAPPRM:MHLW + MOVOL:460V) + FREQ:60HZ , (CAPPRM:AS1210 , CAPPRM:CE , CAPPRM:MHLW , CAPPRM:MOM) + FREQ:50HZ + MOVOL:400V) + CAPPRE:IEC , CAPPRE:ULCUL + CAPPRM:ASME + FREQ:60HZ + MOVOL:460V) + COOL:WATER **(06/12/2019 - 16/12/2019)** (((((MOVOL:380V , MOVOL:460V) + CAPPRM:ASME , CAPPRM:MHLW + MOVOL:460V) + FREQ:60HZ , (CAPPRM:AS1210 , CAPPRM:CE , CAPPRM:MHLW , CAPPRM:MOM) + FREQ:50HZ + MOVOL:400V) + COOL:WATER , CAPPRM:CE + COOL:AIR + FREQ:50HZ + MOVOL:500V) + CAPPRE:IEC , CAPPRE:ULCUL + CAPPRM:ASME + COOL:WATER + FREQ:60HZ + MOVOL:460V) **(17/12/2019 - ...)**	2X31
	~~1089 9664 06~~	1	SWITCH	**(25/02/2019 - 05/12/2019)** ((((MOVOL:380V , MOVOL:460V) + CAPPRM:ASME , CAPPRM:MHLW + MOVOL:460V) + FREQ:60HZ , (CAPPRM:AS1210 , CAPPRM:CE , CAPPRM:MHLW , CAPPRM:MOM) + FREQ:50HZ + MOVOL:400V) + CAPPRE:IEC , CAPPRE:ULCUL + CAPPRM:ASME + FREQ:60HZ + MOVOL:460V) + COOL:WATER **(06/12/2019 - 16/12/2019)** (((((MOVOL:380V , MOVOL:460V) + CAPPRM:ASME , CAPPRM:MHLW + MOVOL:460V) + FREQ:60HZ , (CAPPRM:AS1210 , CAPPRM:CE , CAPPRM:MHLW , CAPPRM:MOM) + FREQ:50HZ + MOVOL:400V) + COOL:WATER , CAPPRM:CE + COOL:AIR + FREQ:50HZ + MOVOL:500V) + CAPPRE:IEC , CAPPRE:ULCUL + CAPPRM:ASME + COOL:WATER + FREQ:60HZ + MOVOL:460V) **(17/12/2019 - ...)**	Q15
	Substituted by:	1089 9551 97 - AUX.CONTACT CIRCUIT BREAKER (quantity: 1)			
	1089 9551 18	1	CIRCUIT BREAKER	**(25/02/2019 - 05/12/2019)** ((((MOVOL:380V , MOVOL:460V) + CAPPRM:ASME , CAPPRM:MHLW + MOVOL:460V) + FREQ:60HZ , (CAPPRM:AS1210 , CAPPRM:CE , CAPPRM:MHLW , CAPPRM:MOM) + FREQ:50HZ + MOVOL:400V) + CAPPRE:IEC , CAPPRE:ULCUL + CAPPRM:ASME + FREQ:60HZ + MOVOL:460V) + COOL:WATER **(06/12/2019 - 16/12/2019)** (((((MOVOL:380V , MOVOL:460V) + CAPPRM:ASME , CAPPRM:MHLW + MOVOL:460V) + FREQ:60HZ , (CAPPRM:AS1210 , CAPPRM:CE , CAPPRM:MHLW , CAPPRM:MOM) + FREQ:50HZ + MOVOL:400V) + COOL:WATER , CAPPRM:CE + COOL:AIR + FREQ:50HZ + MOVOL:500V) + CAPPRE:IEC , CAPPRE:ULCUL + CAPPRM:ASME + COOL:WATER + FREQ:60HZ + MOVOL:460V) **(17/12/2019 - ...)**	Q15

Legend:

CAPPRE:IEC - Component approval electrical:IEC
CAPPRE:ULCUL - Component approval electrical:UL/cUL
CAPPRM:AS1210 - Component approval mechanical:AS1210
CAPPRM:ASME - Component approval mechanical:ASME
CAPPRM:CE - Component approval mechanical:CE
CAPPRM:MHLW - Component approval mechanical:MHLW
CAPPRM:MOM - Component approval mechanical:MOM
COOL:AIR - Cooling:Air cooled
COOL:WATER - Cooling:Water cooled
FREQ:50HZ - Frequency:50 Hz
FREQ:60HZ - Frequency:60 Hz
IDRY:N - Integrated dryer:No
MODEL:GA90VP_16 - Model:GA 90VSD+
MOVOL:200V - Supply voltage:200 V
MOVOL:230V - Supply voltage:230 V
MOVOL:380V - Supply voltage:380 V
MOVOL:400V - Supply voltage:400 V
MOVOL:460V - Supply voltage:460 V
MOVOL:500V - Supply voltage:500 V
MOVOL:575V - Supply voltage:575 V

21.16 - Cubicle components GA 90 VSD+ - (200V-380V-460V/60Hz - IEC, 230V-460V-575V/60Hz - UL-cUL, 200V-400V-500V/50Hz - IEC) - Pack (17/12/2019 - ...)

((((CAPPRM:AS1210 , CAPPRM:CE , CAPPRM:MHLW , CAPPRM:MOM) + MOVOL:400V , CAPPRM:CE + COOL:AIR + MOVOL:500V) + FREQ:50HZ , ((MOVOL:380V , MOVOL:460V) + CAPPRM:ASME , CAPPRM:MHLW + MOVOL:460V) + FREQ:60HZ , CAPPRM:MHLW + COOL:AIR + MOVOL:200V) + CAPPRE:IEC , ((MOVOL:230V , MOVOL:575V) + COOL:AIR , MOVOL:460V) + CAPPRE:ULCUL + CAPPRM:ASME + FREQ:60HZ) + IDRY:N + MODEL:GA90VP_16

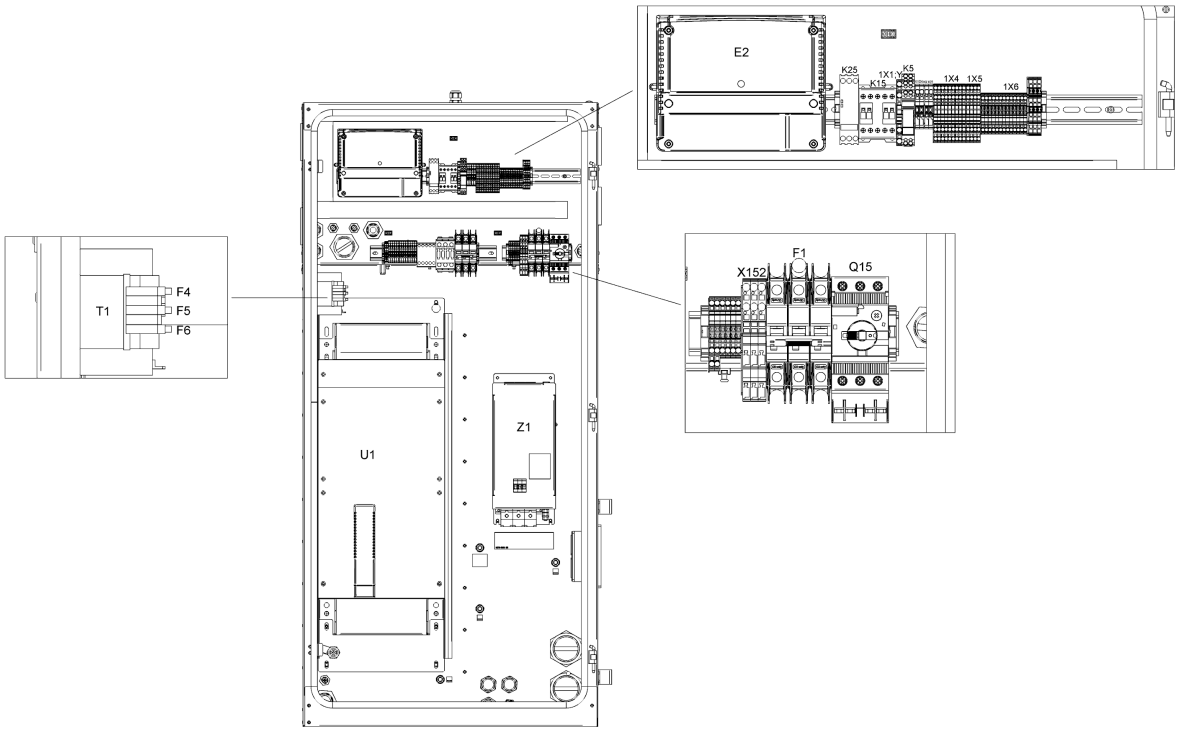

21.16 - Cubicle components GA 90 VSD+ - (200V-380V-460V/60Hz - IEC, 230V-460V-575V/60Hz - UL-cUL, 200V-400V-500V/50Hz - IEC) - Pack (17/12/2019 - ...)

((((CAPPRM:AS1210 , CAPPRM:CE , CAPPRM:MHLW , CAPPRM:MOM) + MOVOL:400V , CAPPRM:CE + COOL:AIR + MOVOL:500V) + FREQ:50HZ , ((MOVOL:380V , MOVOL:460V) + CAPPRM:ASME , CAPPRM:MHLW + MOVOL:460V) + FREQ:60HZ , CAPPRM:MHLW + COOL:AIR + MOVOL:200V) + CAPPRE:IEC , ((MOVOL:230V , MOVOL:575V) + COOL:AIR , MOVOL:460V) + CAPPRE:ULCUL + CAPPRM:ASME + FREQ:60HZ) + IDRY:N + MODEL:GA90VP_16

Ref	Part Number	Qty	Name	Validity	EL
	1088 0038 26	1	TERMINAL	**(25/02/2019 - 05/12/2019)** ((((MOVOL:380V , MOVOL:460V) + CAPPRM:ASME , CAPPRM:MHLW + MOVOL:460V) + FREQ:60HZ , (CAPPRM:AS1210 , CAPPRM:CE , CAPPRM:MHLW , CAPPRM:MOM) + FREQ:50HZ + MOVOL:400V) + CAPPRE:IEC , CAPPRE:ULCUL + CAPPRM:ASME + FREQ:60HZ + MOVOL:460V) + COOL:WATER **(06/12/2019 - 16/12/2019)** (((((MOVOL:380V , MOVOL:460V) + CAPPRM:ASME , CAPPRM:MHLW + MOVOL:460V) + FREQ:60HZ , (CAPPRM:AS1210 , CAPPRM:CE , CAPPRM:MHLW , CAPPRM:MOM) + FREQ:50HZ + MOVOL:400V) + COOL:WATER , CAPPRM:CE + COOL:AIR + FREQ:50HZ + MOVOL:500V) + CAPPRE:IEC , CAPPRE:ULCUL + CAPPRM:ASME + COOL:WATER + FREQ:60HZ + MOVOL:460V) **(17/12/2019 - ...)**	1X1:Y/D
	1089 9602 79	1	CONTACTOR 110 V	**(25/02/2019 - 05/12/2019)** ((((MOVOL:380V , MOVOL:460V) + CAPPRM:ASME , CAPPRM:MHLW + MOVOL:460V) + FREQ:60HZ , (CAPPRM:AS1210 , CAPPRM:CE , CAPPRM:MHLW , CAPPRM:MOM) + FREQ:50HZ + MOVOL:400V) + CAPPRE:IEC , CAPPRE:ULCUL + CAPPRM:ASME + FREQ:60HZ + MOVOL:460V) + COOL:WATER **(06/12/2019 - 16/12/2019)** (((((MOVOL:380V , MOVOL:460V) + CAPPRM:ASME , CAPPRM:MHLW + MOVOL:460V) + FREQ:60HZ , (CAPPRM:AS1210 , CAPPRM:CE , CAPPRM:MHLW , CAPPRM:MOM) + FREQ:50HZ + MOVOL:400V) + COOL:WATER , CAPPRM:CE + COOL:AIR + FREQ:50HZ + MOVOL:500V) + CAPPRE:IEC , CAPPRE:ULCUL + CAPPRM:ASME + COOL:WATER + FREQ:60HZ + MOVOL:460V) **(17/12/2019 - ...)**	K15
	1089 9461 26	1	PHASE SEQUENCE RELAY	**(25/02/2019 - 05/12/2019)** ((((MOVOL:380V , MOVOL:460V) + CAPPRM:ASME , CAPPRM:MHLW + MOVOL:460V) + FREQ:60HZ , (CAPPRM:AS1210 , CAPPRM:CE , CAPPRM:MHLW , CAPPRM:MOM) + FREQ:50HZ + MOVOL:400V) + CAPPRE:IEC , CAPPRE:ULCUL + CAPPRM:ASME + FREQ:60HZ + MOVOL:460V) + COOL:WATER **(06/12/2019 - 16/12/2019)** (((((MOVOL:380V , MOVOL:460V) + CAPPRM:ASME , CAPPRM:MHLW + MOVOL:460V) + FREQ:60HZ , (CAPPRM:AS1210 , CAPPRM:CE , CAPPRM:MHLW , CAPPRM:MOM) + FREQ:50HZ + MOVOL:400V) + COOL:WATER , CAPPRM:CE + COOL:AIR + FREQ:50HZ + MOVOL:500V) + CAPPRE:IEC , CAPPRE:ULCUL + CAPPRM:ASME + COOL:WATER + FREQ:60HZ + MOVOL:460V) **(17/12/2019 - ...)**	K25

Legend:

CAPPRE:IEC - Component approval electrical:IEC
CAPPRE:ULCUL - Component approval electrical:UL/cUL
CAPPRM:AS1210 - Component approval mechanical:AS1210
CAPPRM:ASME - Component approval mechanical:ASME
CAPPRM:CE - Component approval mechanical:CE
CAPPRM:MHLW - Component approval mechanical:MHLW
CAPPRM:MOM - Component approval mechanical:MOM
COOL:AIR - Cooling:Air cooled
COOL:WATER - Cooling:Water cooled
FREQ:50HZ - Frequency:50 Hz
FREQ:60HZ - Frequency:60 Hz
IDRY:N - Integrated dryer:No
MODEL:GA90VP_16 - Model:GA 90VSD+
MOVOL:200V - Supply voltage:200 V
MOVOL:230V - Supply voltage:230 V
MOVOL:380V - Supply voltage:380 V
MOVOL:400V - Supply voltage:400 V
MOVOL:460V - Supply voltage:460 V
MOVOL:500V - Supply voltage:500 V
MOVOL:575V - Supply voltage:575 V

21.16 - Cubicle components GA 90 VSD+ - (200V-380V-460V/60Hz - IEC, 230V-460V-575V/60Hz - UL-cUL, 200V-400V-500V/50Hz - IEC) - Pack (17/12/2019 - ...)

((((CAPPRM:AS1210 , CAPPRM:CE , CAPPRM:MHLW , CAPPRM:MOM) + MOVOL:400V , CAPPRM:CE + COOL:AIR + MOVOL:500V) + FREQ:50HZ , ((MOVOL:380V , MOVOL:460V) + CAPPRM:ASME , CAPPRM:MHLW + MOVOL:460V) + FREQ:60HZ , CAPPRM:MHLW + COOL:AIR + MOVOL:200V) + CAPPRE:IEC , ((MOVOL:230V , MOVOL:575V) + COOL:AIR , MOVOL:460V) + CAPPRE:ULCUL + CAPPRM:ASME + FREQ:60HZ) + IDRY:N + MODEL:GA90VP_16

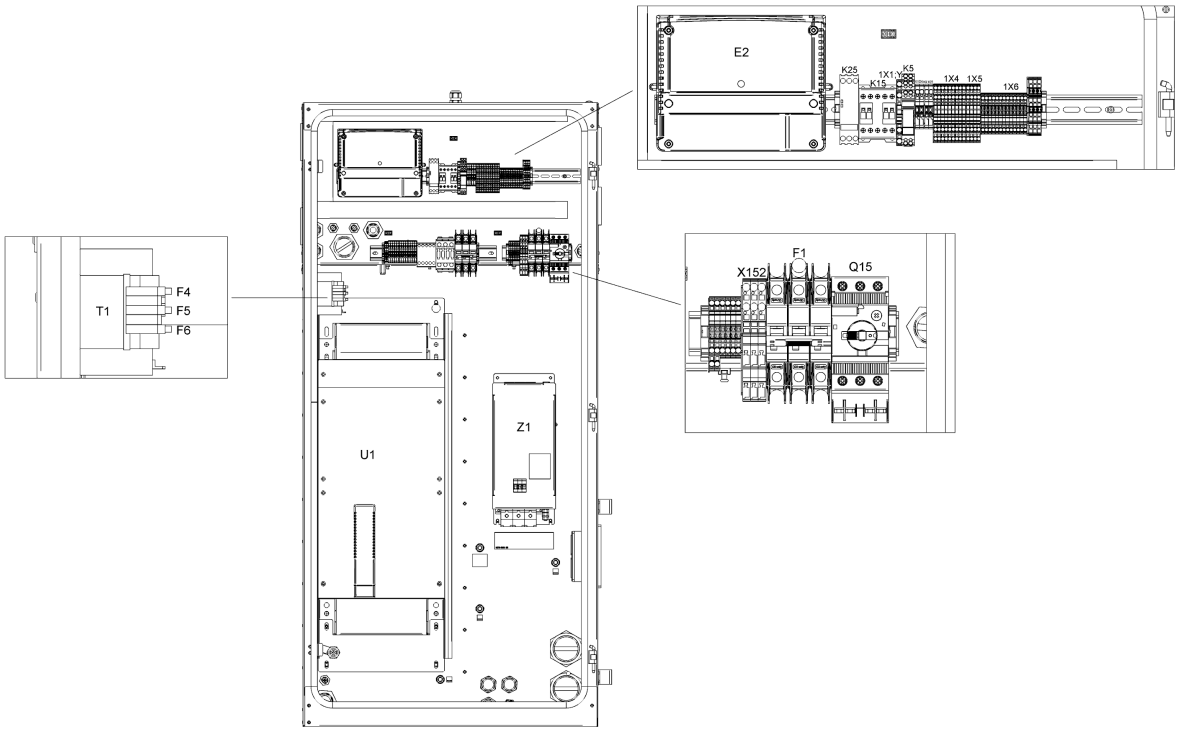

21.16 - Cubicle components GA 90 VSD+ - (200V-380V-460V/60Hz - IEC, 230V-460V-575V/60Hz - UL-cUL, 200V-400V-500V/50Hz - IEC) - Pack (17/12/2019 - ...)

((((CAPPRM:AS1210 , CAPPRM:CE , CAPPRM:MHLW , CAPPRM:MOM) + MOVOL:400V , CAPPRM:CE + COOL:AIR + MOVOL:500V) + FREQ:50HZ , ((MOVOL:380V , MOVOL:460V) + CAPPRM:ASME , CAPPRM:MHLW + MOVOL:460V) + FREQ:60HZ , CAPPRM:MHLW + COOL:AIR + MOVOL:200V) + CAPPRE:IEC , ((MOVOL:230V , MOVOL:575V) + COOL:AIR , MOVOL:460V) + CAPPRE:ULCUL + CAPPRM:ASME + FREQ:60HZ) + IDRY:N + MODEL:GA90VP_16

Ref	Part Number	Qty	Name	Validity	EL
	1088 0032 17	1	RELAY 115 VAC	**(25/02/2019 - 05/12/2019)** ((((MOVOL:380V , MOVOL:460V) + CAPPRM:ASME , CAPPRM:MHLW + MOVOL:460V) + FREQ:60HZ , (CAPPRM:AS1210 , CAPPRM:CE , CAPPRM:MHLW , CAPPRM:MOM) + FREQ:50HZ + MOVOL:400V) + CAPPRE:IEC , CAPPRE:ULCUL + CAPPRM:ASME + FREQ:60HZ + MOVOL:460V) + COOL:WATER **(06/12/2019 - 16/12/2019)** (((((MOVOL:380V , MOVOL:460V) + CAPPRM:ASME , CAPPRM:MHLW + MOVOL:460V) + FREQ:60HZ , (CAPPRM:AS1210 , CAPPRM:CE , CAPPRM:MHLW , CAPPRM:MOM) + FREQ:50HZ + MOVOL:400V) + COOL:WATER , CAPPRM:CE + COOL:AIR + FREQ:50HZ + MOVOL:500V) + CAPPRE:IEC , CAPPRE:ULCUL + CAPPRM:ASME + COOL:WATER + FREQ:60HZ + MOVOL:460V) **(17/12/2019 - ...)**	K5
	0991 8011 21	1.38	CABLE TRAY	**(25/02/2019 - 05/12/2019)** ((((MOVOL:380V , MOVOL:460V) + CAPPRM:ASME , CAPPRM:MHLW + MOVOL:460V) + FREQ:60HZ , (CAPPRM:AS1210 , CAPPRM:CE , CAPPRM:MHLW , CAPPRM:MOM) + FREQ:50HZ + MOVOL:400V) + CAPPRE:IEC , CAPPRE:ULCUL + CAPPRM:ASME + FREQ:60HZ + MOVOL:460V) + COOL:WATER **(06/12/2019 - 16/12/2019)** (((((MOVOL:380V , MOVOL:460V) + CAPPRM:ASME , CAPPRM:MHLW + MOVOL:460V) + FREQ:60HZ , (CAPPRM:AS1210 , CAPPRM:CE , CAPPRM:MHLW , CAPPRM:MOM) + FREQ:50HZ + MOVOL:400V) + COOL:WATER , CAPPRM:CE + COOL:AIR + FREQ:50HZ + MOVOL:500V) + CAPPRE:IEC , CAPPRE:ULCUL + CAPPRM:ASME + COOL:WATER + FREQ:60HZ + MOVOL:460V) **(17/12/2019 - ...)**	L=1384mm
	0697 9811 16	1	PLUG	**(25/02/2019 - 05/12/2019)** ((((MOVOL:380V , MOVOL:460V) + CAPPRM:ASME , CAPPRM:MHLW + MOVOL:460V) + FREQ:60HZ , (CAPPRM:AS1210 , CAPPRM:CE , CAPPRM:MHLW , CAPPRM:MOM) + FREQ:50HZ + MOVOL:400V) + CAPPRE:IEC , CAPPRE:ULCUL + CAPPRM:ASME + FREQ:60HZ + MOVOL:460V) + COOL:WATER **(06/12/2019 - 16/12/2019)** (((((MOVOL:380V , MOVOL:460V) + CAPPRM:ASME , CAPPRM:MHLW + MOVOL:460V) + FREQ:60HZ , (CAPPRM:AS1210 , CAPPRM:CE , CAPPRM:MHLW , CAPPRM:MOM) + FREQ:50HZ + MOVOL:400V) + COOL:WATER , CAPPRM:CE + COOL:AIR + FREQ:50HZ + MOVOL:500V) + CAPPRE:IEC , CAPPRE:ULCUL + CAPPRM:ASME + COOL:WATER + FREQ:60HZ + MOVOL:460V) **(17/12/2019 - ...)**	
	Electrical legend:	Plug for Dryer			

Legend:

CAPPRE:IEC - Component approval electrical:IEC
CAPPRE:ULCUL - Component approval electrical:UL/cUL
CAPPRM:AS1210 - Component approval mechanical:AS1210
CAPPRM:ASME - Component approval mechanical:ASME
CAPPRM:CE - Component approval mechanical:CE
CAPPRM:MHLW - Component approval mechanical:MHLW
CAPPRM:MOM - Component approval mechanical:MOM
COOL:AIR - Cooling:Air cooled
COOL:WATER - Cooling:Water cooled
FREQ:50HZ - Frequency:50 Hz
FREQ:60HZ - Frequency:60 Hz
IDRY:N - Integrated dryer:No
MODEL:GA90VP_16 - Model:GA 90VSD+
MOVOL:200V - Supply voltage:200 V
MOVOL:230V - Supply voltage:230 V
MOVOL:380V - Supply voltage:380 V
MOVOL:400V - Supply voltage:400 V
MOVOL:460V - Supply voltage:460 V
MOVOL:500V - Supply voltage:500 V
MOVOL:575V - Supply voltage:575 V

21.16 - Cubicle components GA 90 VSD+ - (200V-380V-460V/60Hz - IEC, 230V-460V-575V/60Hz - UL-cUL, 200V-400V-500V/50Hz - IEC) - Pack (17/12/2019 - ...)

((((CAPPRM:AS1210 , CAPPRM:CE , CAPPRM:MHLW , CAPPRM:MOM) + MOVOL:400V , CAPPRM:CE + COOL:AIR + MOVOL:500V) + FREQ:50HZ , ((MOVOL:380V , MOVOL:460V) + CAPPRM:ASME , CAPPRM:MHLW + MOVOL:460V) + FREQ:60HZ , CAPPRM:MHLW + COOL:AIR + MOVOL:200V) + CAPPRE:IEC , ((MOVOL:230V , MOVOL:575V) + COOL:AIR , MOVOL:460V) + CAPPRE:ULCUL + CAPPRM:ASME + FREQ:60HZ) + IDRY:N + MODEL:GA90VP_16

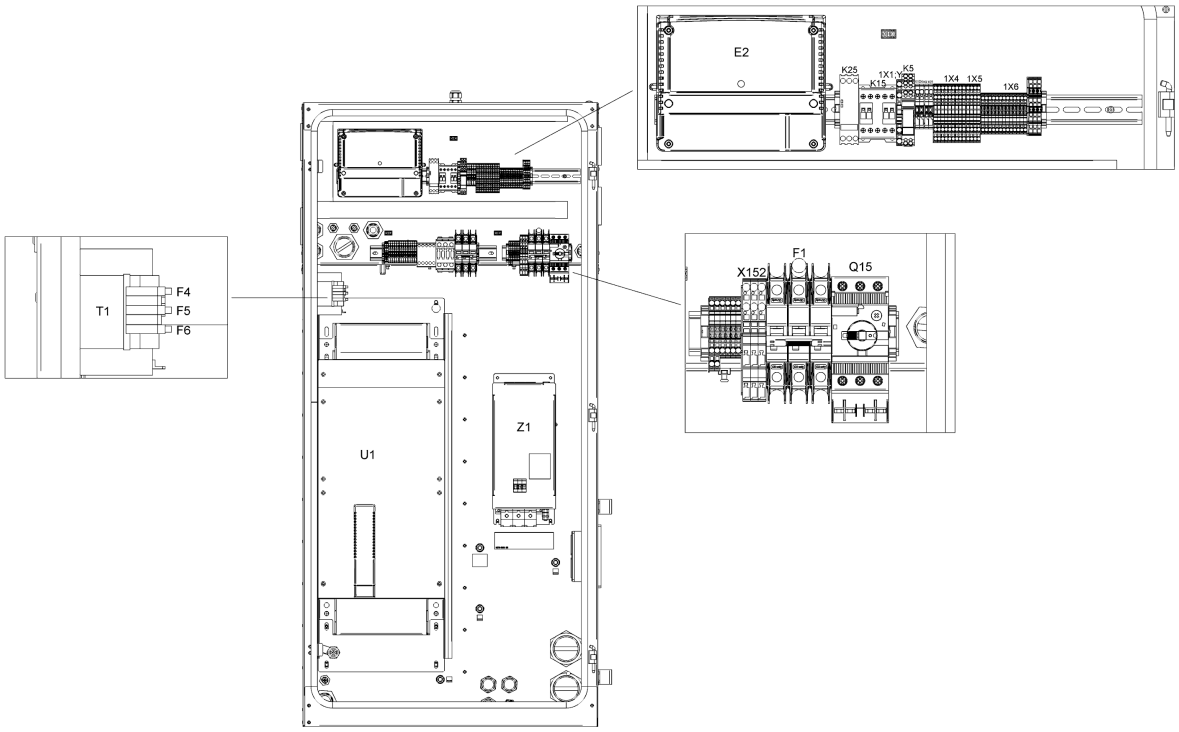

21.16 - Cubicle components GA 90 VSD+ - (200V-380V-460V/60Hz - IEC, 230V-460V-575V/60Hz - UL-cUL, 200V-400V-500V/50Hz - IEC) - Pack (17/12/2019 - ...)

((((CAPPRM:AS1210 , CAPPRM:CE , CAPPRM:MHLW , CAPPRM:MOM) + MOVOL:400V , CAPPRM:CE + COOL:AIR + MOVOL:500V) + FREQ:50HZ , ((MOVOL:380V , MOVOL:460V) + CAPPRM:ASME , CAPPRM:MHLW + MOVOL:460V) + FREQ:60HZ , CAPPRM:MHLW + COOL:AIR + MOVOL:200V) + CAPPRE:IEC , ((MOVOL:230V , MOVOL:575V) + COOL:AIR , MOVOL:460V) + CAPPRE:ULCUL + CAPPRM:ASME + FREQ:60HZ) + IDRY:N + MODEL:GA90VP_16

Ref	Part Number	Qty	Name	Validity	EL
	0989 3700 47	1	LOCKNUT	**(25/02/2019 - 05/12/2019)** ((((MOVOL:380V , MOVOL:460V) + CAPPRM:ASME , CAPPRM:MHLW + MOVOL:460V) + FREQ:60HZ , (CAPPRM:AS1210 , CAPPRM:CE , CAPPRM:MHLW , CAPPRM:MOM) + FREQ:50HZ + MOVOL:400V) + CAPPRE:IEC , CAPPRE:ULCUL + CAPPRM:ASME + FREQ:60HZ + MOVOL:460V) + COOL:WATER **(06/12/2019 - 16/12/2019)** (((((MOVOL:380V , MOVOL:460V) + CAPPRM:ASME , CAPPRM:MHLW + MOVOL:460V) + FREQ:60HZ , (CAPPRM:AS1210 , CAPPRM:CE , CAPPRM:MHLW , CAPPRM:MOM) + FREQ:50HZ + MOVOL:400V) + COOL:WATER , CAPPRM:CE + COOL:AIR + FREQ:50HZ + MOVOL:500V) + CAPPRE:IEC , CAPPRE:ULCUL + CAPPRM:ASME + COOL:WATER + FREQ:60HZ + MOVOL:460V) **(17/12/2019 - ...)**	
	Electrical legend:	Locknut for dryer			
	0697 9811 11	2	PLUG	**(25/02/2019 - 05/12/2019)** ((((MOVOL:380V , MOVOL:460V) + CAPPRM:ASME , CAPPRM:MHLW + MOVOL:460V) + FREQ:60HZ , (CAPPRM:AS1210 , CAPPRM:CE , CAPPRM:MHLW , CAPPRM:MOM) + FREQ:50HZ + MOVOL:400V) + CAPPRE:IEC , CAPPRE:ULCUL + CAPPRM:ASME + FREQ:60HZ + MOVOL:460V) + COOL:WATER **(06/12/2019 - 16/12/2019)** (((((MOVOL:380V , MOVOL:460V) + CAPPRM:ASME , CAPPRM:MHLW + MOVOL:460V) + FREQ:60HZ , (CAPPRM:AS1210 , CAPPRM:CE , CAPPRM:MHLW , CAPPRM:MOM) + FREQ:50HZ + MOVOL:400V) + COOL:WATER , CAPPRM:CE + COOL:AIR + FREQ:50HZ + MOVOL:500V) + CAPPRE:IEC , CAPPRE:ULCUL + CAPPRM:ASME + COOL:WATER + FREQ:60HZ + MOVOL:460V) **(17/12/2019 - ...)**	
	Electrical legend:	Plug for FF Drain/LAT			
	0989 3700 42	2	NUT	**(25/02/2019 - 05/12/2019)** ((((MOVOL:380V , MOVOL:460V) + CAPPRM:ASME , CAPPRM:MHLW + MOVOL:460V) + FREQ:60HZ , (CAPPRM:AS1210 , CAPPRM:CE , CAPPRM:MHLW , CAPPRM:MOM) + FREQ:50HZ + MOVOL:400V) + CAPPRE:IEC , CAPPRE:ULCUL + CAPPRM:ASME + FREQ:60HZ + MOVOL:460V) + COOL:WATER **(06/12/2019 - 16/12/2019)** (((((MOVOL:380V , MOVOL:460V) + CAPPRM:ASME , CAPPRM:MHLW + MOVOL:460V) + FREQ:60HZ , (CAPPRM:AS1210 , CAPPRM:CE , CAPPRM:MHLW , CAPPRM:MOM) + FREQ:50HZ + MOVOL:400V) + COOL:WATER , CAPPRM:CE + COOL:AIR + FREQ:50HZ + MOVOL:500V) + CAPPRE:IEC , CAPPRE:ULCUL + CAPPRM:ASME + COOL:WATER + FREQ:60HZ + MOVOL:460V) **(17/12/2019 - ...)**	
	Electrical legend:	Locknut for FF Drain/LAT			

Legend:

CAPPRE:IEC - Component approval electrical:IEC
CAPPRE:ULCUL - Component approval electrical:UL/cUL
CAPPRM:AS1210 - Component approval mechanical:AS1210
CAPPRM:ASME - Component approval mechanical:ASME
CAPPRM:CE - Component approval mechanical:CE
CAPPRM:MHLW - Component approval mechanical:MHLW
CAPPRM:MOM - Component approval mechanical:MOM
COOL:AIR - Cooling:Air cooled
COOL:WATER - Cooling:Water cooled
FREQ:50HZ - Frequency:50 Hz
FREQ:60HZ - Frequency:60 Hz
IDRY:N - Integrated dryer:No
MODEL:GA90VP_16 - Model:GA 90VSD+
MOVOL:200V - Supply voltage:200 V
MOVOL:230V - Supply voltage:230 V
MOVOL:380V - Supply voltage:380 V
MOVOL:400V - Supply voltage:400 V
MOVOL:460V - Supply voltage:460 V
MOVOL:500V - Supply voltage:500 V
MOVOL:575V - Supply voltage:575 V

21.16 - Cubicle components GA 90 VSD+ - (200V-380V-460V/60Hz - IEC, 230V-460V-575V/60Hz - UL-cUL, 200V-400V-500V/50Hz - IEC) - Pack (17/12/2019 - ...)

((((CAPPRM:AS1210 , CAPPRM:CE , CAPPRM:MHLW , CAPPRM:MOM) + MOVOL:400V , CAPPRM:CE + COOL:AIR + MOVOL:500V) + FREQ:50HZ , ((MOVOL:380V , MOVOL:460V) + CAPPRM:ASME , CAPPRM:MHLW + MOVOL:460V) + FREQ:60HZ , CAPPRM:MHLW + COOL:AIR + MOVOL:200V) + CAPPRE:IEC , ((MOVOL:230V , MOVOL:575V) + COOL:AIR , MOVOL:460V) + CAPPRE:ULCUL + CAPPRM:ASME + FREQ:60HZ) + IDRY:N + MODEL:GA90VP_16

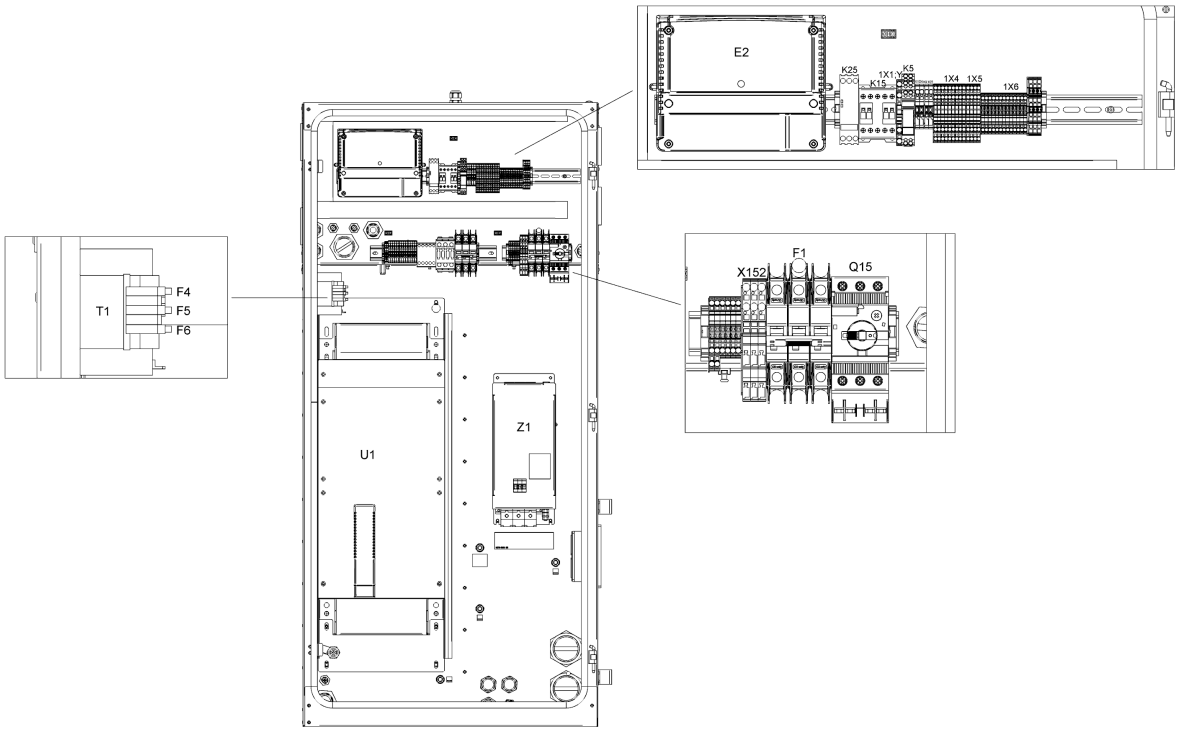

21.16 - Cubicle components GA 90 VSD+ - (200V-380V-460V/60Hz - IEC, 230V-460V-575V/60Hz - UL-cUL, 200V-400V-500V/50Hz - IEC) - Pack (17/12/2019 - ...)

((((CAPPRM:AS1210 , CAPPRM:CE , CAPPRM:MHLW , CAPPRM:MOM) + MOVOL:400V , CAPPRM:CE + COOL:AIR + MOVOL:500V) + FREQ:50HZ , ((MOVOL:380V , MOVOL:460V) + CAPPRM:ASME , CAPPRM:MHLW + MOVOL:460V) + FREQ:60HZ , CAPPRM:MHLW + COOL:AIR + MOVOL:200V) + CAPPRE:IEC , ((MOVOL:230V , MOVOL:575V) + COOL:AIR , MOVOL:460V) + CAPPRE:ULCUL + CAPPRM:ASME + FREQ:60HZ) + IDRY:N + MODEL:GA90VP_16

Ref	Part Number	Qty	Name	Validity	EL
	1088 0031 13	1	CONNECTOR	**(25/02/2019 - 05/12/2019)** ((((MOVOL:380V , MOVOL:460V) + CAPPRM:ASME , CAPPRM:MHLW + MOVOL:460V) + FREQ:60HZ , (CAPPRM:AS1210 , CAPPRM:CE , CAPPRM:MHLW , CAPPRM:MOM) + FREQ:50HZ + MOVOL:400V) + CAPPRE:IEC , CAPPRE:ULCUL + CAPPRM:ASME + FREQ:60HZ + MOVOL:460V) + COOL:WATER **(06/12/2019 - 16/12/2019)** (((((MOVOL:380V , MOVOL:460V) + CAPPRM:ASME , CAPPRM:MHLW + MOVOL:460V) + FREQ:60HZ , (CAPPRM:AS1210 , CAPPRM:CE , CAPPRM:MHLW , CAPPRM:MOM) + FREQ:50HZ + MOVOL:400V) + COOL:WATER , CAPPRM:CE + COOL:AIR + FREQ:50HZ + MOVOL:500V) + CAPPRE:IEC , CAPPRE:ULCUL + CAPPRM:ASME + COOL:WATER + FREQ:60HZ + MOVOL:460V) **(17/12/2019 - ...)**	1X30
	1088 0037 82	1	CONNECTOR	**(25/02/2019 - 05/12/2019)** ((((MOVOL:380V , MOVOL:460V) + CAPPRM:ASME , CAPPRM:MHLW + MOVOL:460V) + FREQ:60HZ , (CAPPRM:AS1210 , CAPPRM:CE , CAPPRM:MHLW , CAPPRM:MOM) + FREQ:50HZ + MOVOL:400V) + CAPPRE:IEC , CAPPRE:ULCUL + CAPPRM:ASME + FREQ:60HZ + MOVOL:460V) + COOL:WATER **(06/12/2019 - 16/12/2019)** (((((MOVOL:380V , MOVOL:460V) + CAPPRM:ASME , CAPPRM:MHLW + MOVOL:460V) + FREQ:60HZ , (CAPPRM:AS1210 , CAPPRM:CE , CAPPRM:MHLW , CAPPRM:MOM) + FREQ:50HZ + MOVOL:400V) + COOL:WATER , CAPPRM:CE + COOL:AIR + FREQ:50HZ + MOVOL:500V) + CAPPRE:IEC , CAPPRE:ULCUL + CAPPRM:ASME + COOL:WATER + FREQ:60HZ + MOVOL:460V) **(17/12/2019 - ...)**	3X34
	0697 9811 13	1	PLUG	**(25/02/2019 - 05/12/2019)** ((((MOVOL:380V , MOVOL:460V) + CAPPRM:ASME , CAPPRM:MHLW + MOVOL:460V) + FREQ:60HZ , (CAPPRM:AS1210 , CAPPRM:CE , CAPPRM:MHLW , CAPPRM:MOM) + FREQ:50HZ + MOVOL:400V) + CAPPRE:IEC , CAPPRE:ULCUL + CAPPRM:ASME + FREQ:60HZ + MOVOL:460V) + COOL:WATER **(06/12/2019 - 16/12/2019)** (((((MOVOL:380V , MOVOL:460V) + CAPPRM:ASME , CAPPRM:MHLW + MOVOL:460V) + FREQ:60HZ , (CAPPRM:AS1210 , CAPPRM:CE , CAPPRM:MHLW , CAPPRM:MOM) + FREQ:50HZ + MOVOL:400V) + COOL:WATER , CAPPRM:CE + COOL:AIR + FREQ:50HZ + MOVOL:500V) + CAPPRE:IEC , CAPPRE:ULCUL + CAPPRM:ASME + COOL:WATER + FREQ:60HZ + MOVOL:460V) **(17/12/2019 - ...)**	

Electrical legend: Energy recovery

Legend:

CAPPRE:IEC - Component approval electrical:IEC
CAPPRE:ULCUL - Component approval electrical:UL/cUL
CAPPRM:AS1210 - Component approval mechanical:AS1210
CAPPRM:ASME - Component approval mechanical:ASME
CAPPRM:CE - Component approval mechanical:CE
CAPPRM:MHLW - Component approval mechanical:MHLW
CAPPRM:MOM - Component approval mechanical:MOM
COOL:AIR - Cooling:Air cooled
COOL:WATER - Cooling:Water cooled
FREQ:50HZ - Frequency:50 Hz
FREQ:60HZ - Frequency:60 Hz
IDRY:N - Integrated dryer:No
MODEL:GA90VP_16 - Model:GA 90VSD+
MOVOL:200V - Supply voltage:200 V
MOVOL:230V - Supply voltage:230 V
MOVOL:380V - Supply voltage:380 V
MOVOL:400V - Supply voltage:400 V
MOVOL:460V - Supply voltage:460 V
MOVOL:500V - Supply voltage:500 V
MOVOL:575V - Supply voltage:575 V

21.16 - Cubicle components GA 90 VSD+ - (200V-380V-460V/60Hz - IEC, 230V-460V-575V/60Hz - UL-cUL, 200V-400V-500V/50Hz - IEC) - Pack (17/12/2019 - ...)

((((CAPPRM:AS1210 , CAPPRM:CE , CAPPRM:MHLW , CAPPRM:MOM) + MOVOL:400V , CAPPRM:CE + COOL:AIR + MOVOL:500V) + FREQ:50HZ , ((MOVOL:380V , MOVOL:460V) + CAPPRM:ASME , CAPPRM:MHLW + MOVOL:460V) + FREQ:60HZ , CAPPRM:MHLW + COOL:AIR + MOVOL:200V) + CAPPRE:IEC , ((MOVOL:230V , MOVOL:575V) + COOL:AIR , MOVOL:460V) + CAPPRE:ULCUL + CAPPRM:ASME + FREQ:60HZ) + IDRY:N + MODEL:GA90VP_16

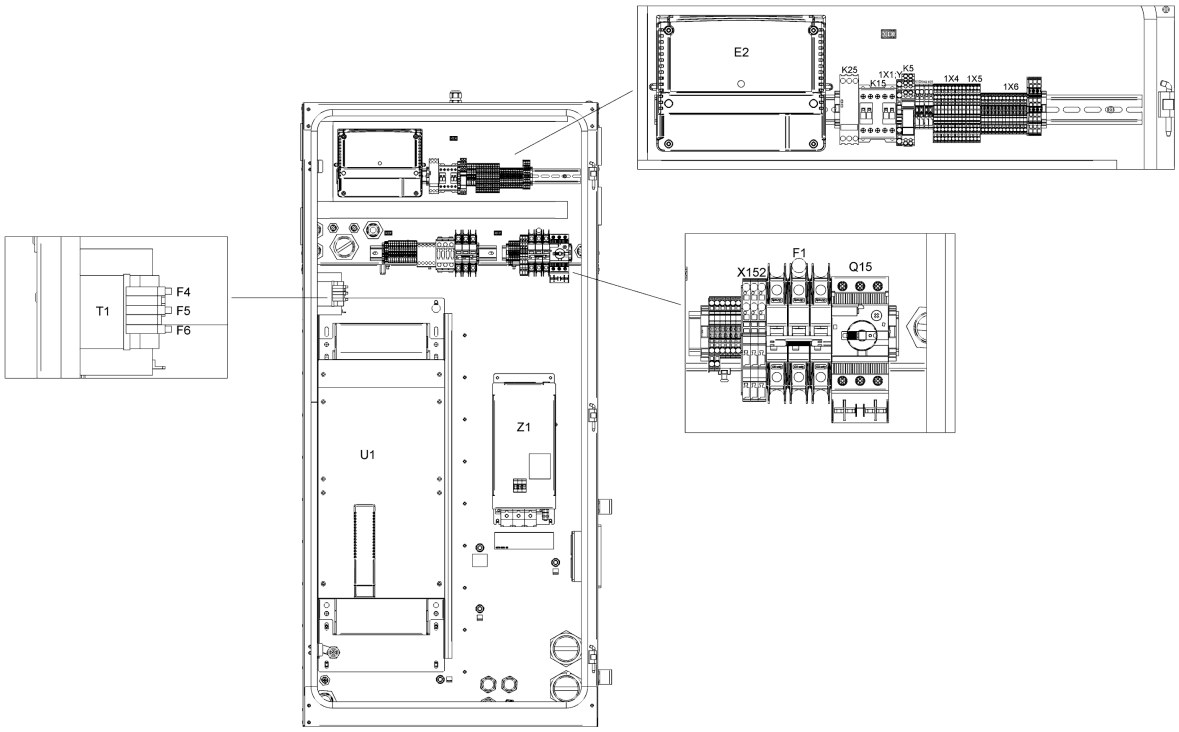

21.16 - Cubicle components GA 90 VSD+ - (200V-380V-460V/60Hz - IEC, 230V-460V-575V/60Hz - UL-cUL, 200V-400V-500V/50Hz - IEC) - Pack (17/12/2019 - ...)

((((CAPPRM:AS1210 , CAPPRM:CE , CAPPRM:MHLW , CAPPRM:MOM) + MOVOL:400V , CAPPRM:CE + COOL:AIR + MOVOL:500V) + FREQ:50HZ , ((MOVOL:380V , MOVOL:460V) + CAPPRM:ASME , CAPPRM:MHLW + MOVOL:460V) + FREQ:60HZ , CAPPRM:MHLW + COOL:AIR + MOVOL:200V) + CAPPRE:IEC , ((MOVOL:230V , MOVOL:575V) + COOL:AIR , MOVOL:460V) + CAPPRE:ULCUL + CAPPRM:ASME + FREQ:60HZ) + IDRY:N + MODEL:GA90VP_16

Ref	Part Number	Qty	Name	Validity	EL
	0989 3700 44	1	LOCKNUT	**(25/02/2019 - 05/12/2019)** ((((MOVOL:380V , MOVOL:460V) + CAPPRM:ASME , CAPPRM:MHLW + MOVOL:460V) + FREQ:60HZ , (CAPPRM:AS1210 , CAPPRM:CE , CAPPRM:MHLW , CAPPRM:MOM) + FREQ:50HZ + MOVOL:400V) + CAPPRE:IEC , CAPPRE:ULCUL + CAPPRM:ASME + FREQ:60HZ + MOVOL:460V) + COOL:WATER **(06/12/2019 - 16/12/2019)** (((((MOVOL:380V , MOVOL:460V) + CAPPRM:ASME , CAPPRM:MHLW + MOVOL:460V) + FREQ:60HZ , (CAPPRM:AS1210 , CAPPRM:CE , CAPPRM:MHLW , CAPPRM:MOM) + FREQ:50HZ + MOVOL:400V) + COOL:WATER , CAPPRM:CE + COOL:AIR + FREQ:50HZ + MOVOL:500V) + CAPPRE:IEC , CAPPRE:ULCUL + CAPPRM:ASME + COOL:WATER + FREQ:60HZ + MOVOL:460V) **(17/12/2019 - ...)**	
	Electrical legend:	Energy recovery			
	0697 9811 12	1	PLUG	**(25/02/2019 - 05/12/2019)** ((((MOVOL:380V , MOVOL:460V) + CAPPRM:ASME , CAPPRM:MHLW + MOVOL:460V) + FREQ:60HZ , (CAPPRM:AS1210 , CAPPRM:CE , CAPPRM:MHLW , CAPPRM:MOM) + FREQ:50HZ + MOVOL:400V) + CAPPRE:IEC , CAPPRE:ULCUL + CAPPRM:ASME + FREQ:60HZ + MOVOL:460V) + COOL:WATER **(06/12/2019 - 16/12/2019)** (((((MOVOL:380V , MOVOL:460V) + CAPPRM:ASME , CAPPRM:MHLW + MOVOL:460V) + FREQ:60HZ , (CAPPRM:AS1210 , CAPPRM:CE , CAPPRM:MHLW , CAPPRM:MOM) + FREQ:50HZ + MOVOL:400V) + COOL:WATER , CAPPRM:CE + COOL:AIR + FREQ:50HZ + MOVOL:500V) + CAPPRE:IEC , CAPPRE:ULCUL + CAPPRM:ASME + COOL:WATER + FREQ:60HZ + MOVOL:460V) **(17/12/2019 - ...)**	
	Electrical legend:	Control circuit of T10			
	0989 3700 43	1	NUT	**(25/02/2019 - 05/12/2019)** ((((MOVOL:380V , MOVOL:460V) + CAPPRM:ASME , CAPPRM:MHLW + MOVOL:460V) + FREQ:60HZ , (CAPPRM:AS1210 , CAPPRM:CE , CAPPRM:MHLW , CAPPRM:MOM) + FREQ:50HZ + MOVOL:400V) + CAPPRE:IEC , CAPPRE:ULCUL + CAPPRM:ASME + FREQ:60HZ + MOVOL:460V) + COOL:WATER **(06/12/2019 - 16/12/2019)** (((((MOVOL:380V , MOVOL:460V) + CAPPRM:ASME , CAPPRM:MHLW + MOVOL:460V) + FREQ:60HZ , (CAPPRM:AS1210 , CAPPRM:CE , CAPPRM:MHLW , CAPPRM:MOM) + FREQ:50HZ + MOVOL:400V) + COOL:WATER , CAPPRM:CE + COOL:AIR + FREQ:50HZ + MOVOL:500V) + CAPPRE:IEC , CAPPRE:ULCUL + CAPPRM:ASME + COOL:WATER + FREQ:60HZ + MOVOL:460V) **(17/12/2019 - ...)**	
	Electrical legend:	Control circuit of T10			

Legend:

CAPPRE:IEC - Component approval electrical:IEC
CAPPRE:ULCUL - Component approval electrical:UL/cUL
CAPPRM:AS1210 - Component approval mechanical:AS1210
CAPPRM:ASME - Component approval mechanical:ASME
CAPPRM:CE - Component approval mechanical:CE
CAPPRM:MHLW - Component approval mechanical:MHLW
CAPPRM:MOM - Component approval mechanical:MOM
COOL:AIR - Cooling:Air cooled
COOL:WATER - Cooling:Water cooled
FREQ:50HZ - Frequency:50 Hz
FREQ:60HZ - Frequency:60 Hz
IDRY:N - Integrated dryer:No
MODEL:GA90VP_16 - Model:GA 90VSD+
MOVOL:200V - Supply voltage:200 V
MOVOL:230V - Supply voltage:230 V
MOVOL:380V - Supply voltage:380 V
MOVOL:400V - Supply voltage:400 V
MOVOL:460V - Supply voltage:460 V
MOVOL:500V - Supply voltage:500 V
MOVOL:575V - Supply voltage:575 V

21.16 - Cubicle components GA 90 VSD+ - (200V-380V-460V/60Hz - IEC, 230V-460V-575V/60Hz - UL-cUL, 200V-400V-500V/50Hz - IEC) - Pack (17/12/2019 - ...)

((((CAPPRM:AS1210 , CAPPRM:CE , CAPPRM:MHLW , CAPPRM:MOM) + MOVOL:400V , CAPPRM:CE + COOL:AIR + MOVOL:500V) + FREQ:50HZ , ((MOVOL:380V , MOVOL:460V) + CAPPRM:ASME , CAPPRM:MHLW + MOVOL:460V) + FREQ:60HZ , CAPPRM:MHLW + COOL:AIR + MOVOL:200V) + CAPPRE:IEC , ((MOVOL:230V , MOVOL:575V) + COOL:AIR , MOVOL:460V) + CAPPRE:ULCUL + CAPPRM:ASME + FREQ:60HZ) + IDRY:N + MODEL:GA90VP_16

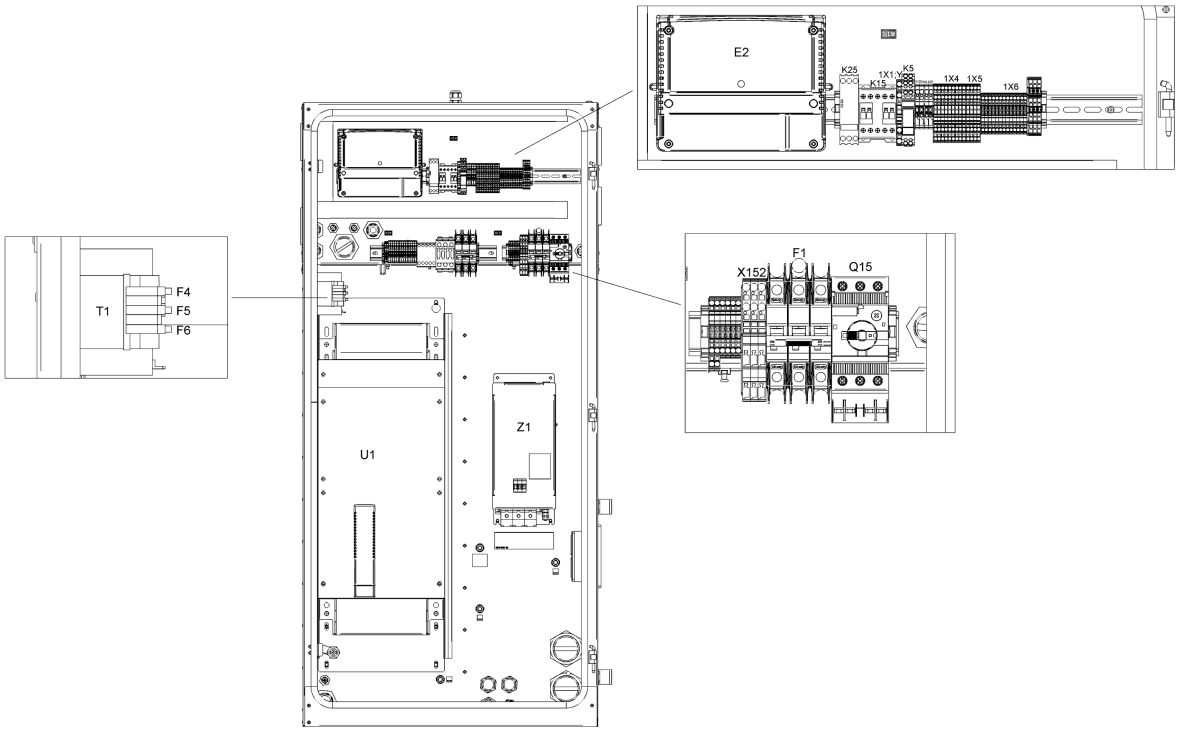

21.16 - Cubicle components GA 90 VSD+ - (200V-380V-460V/60Hz - IEC, 230V-460V-575V/60Hz - UL-cUL, 200V-400V-500V/50Hz - IEC) - Pack (17/12/2019 - ...)

((((CAPPRM:AS1210 , CAPPRM:CE , CAPPRM:MHLW , CAPPRM:MOM) + MOVOL:400V , CAPPRM:CE + COOL:AIR + MOVOL:500V) + FREQ:50HZ , ((MOVOL:380V , MOVOL:460V) + CAPPRM:ASME , CAPPRM:MHLW + MOVOL:460V) + FREQ:60HZ , CAPPRM:MHLW + COOL:AIR + MOVOL:200V) + CAPPRE:IEC , ((MOVOL:230V , MOVOL:575V) + COOL:AIR , MOVOL:460V) + CAPPRE:ULCUL + CAPPRM:ASME + FREQ:60HZ) + IDRY:N + MODEL:GA90VP_16

Ref	Part Number	Qty	Name	Validity	EL
	0697 9811 10	1	PLUG	**(25/02/2019 - 05/12/2019)** ((((MOVOL:380V , MOVOL:460V) + CAPPRM:ASME , CAPPRM:MHLW + MOVOL:460V) + FREQ:60HZ , (CAPPRM:AS1210 , CAPPRM:CE , CAPPRM:MHLW , CAPPRM:MOM) + FREQ:50HZ + MOVOL:400V) + CAPPRE:IEC , CAPPRE:ULCUL + CAPPRM:ASME + FREQ:60HZ + MOVOL:460V) + COOL:WATER **(06/12/2019 - 16/12/2019)** (((((MOVOL:380V , MOVOL:460V) + CAPPRM:ASME , CAPPRM:MHLW + MOVOL:460V) + FREQ:60HZ , (CAPPRM:AS1210 , CAPPRM:CE , CAPPRM:MHLW , CAPPRM:MOM) + FREQ:50HZ + MOVOL:400V) + COOL:WATER , CAPPRM:CE + COOL:AIR + FREQ:50HZ + MOVOL:500V) + CAPPRE:IEC , CAPPRE:ULCUL + CAPPRM:ASME + COOL:WATER + FREQ:60HZ + MOVOL:460V) **(17/12/2019 - ...)**	
	Electrical legend:	Plug for smartbox hole			
	0989 3700 41	1	LOCKNUT	**(25/02/2019 - 05/12/2019)** ((((MOVOL:380V , MOVOL:460V) + CAPPRM:ASME , CAPPRM:MHLW + MOVOL:460V) + FREQ:60HZ , (CAPPRM:AS1210 , CAPPRM:CE , CAPPRM:MHLW , CAPPRM:MOM) + FREQ:50HZ + MOVOL:400V) + CAPPRE:IEC , CAPPRE:ULCUL + CAPPRM:ASME + FREQ:60HZ + MOVOL:460V) + COOL:WATER **(06/12/2019 - 16/12/2019)** (((((MOVOL:380V , MOVOL:460V) + CAPPRM:ASME , CAPPRM:MHLW + MOVOL:460V) + FREQ:60HZ , (CAPPRM:AS1210 , CAPPRM:CE , CAPPRM:MHLW , CAPPRM:MOM) + FREQ:50HZ + MOVOL:400V) + COOL:WATER , CAPPRM:CE + COOL:AIR + FREQ:50HZ + MOVOL:500V) + CAPPRE:IEC , CAPPRE:ULCUL + CAPPRM:ASME + COOL:WATER + FREQ:60HZ + MOVOL:460V) **(17/12/2019 - ...)**	
	Electrical legend:	Nut for smartbox hole			
	1089 9556 37	1	AIR INLET WITH FILTER	**(25/02/2019 - 05/12/2019)** ((((MOVOL:380V , MOVOL:460V) + CAPPRM:ASME , CAPPRM:MHLW + MOVOL:460V) + FREQ:60HZ , (CAPPRM:AS1210 , CAPPRM:CE , CAPPRM:MHLW , CAPPRM:MOM) + FREQ:50HZ + MOVOL:400V) + CAPPRE:IEC , CAPPRE:ULCUL + CAPPRM:ASME + FREQ:60HZ + MOVOL:460V) + COOL:WATER **(06/12/2019 - 16/12/2019)** (((((MOVOL:380V , MOVOL:460V) + CAPPRM:ASME , CAPPRM:MHLW + MOVOL:460V) + FREQ:60HZ , (CAPPRM:AS1210 , CAPPRM:CE , CAPPRM:MHLW , CAPPRM:MOM) + FREQ:50HZ + MOVOL:400V) + COOL:WATER , CAPPRM:CE + COOL:AIR + FREQ:50HZ + MOVOL:500V) + CAPPRE:IEC , CAPPRE:ULCUL + CAPPRM:ASME + COOL:WATER + FREQ:60HZ + MOVOL:460V) **(17/12/2019 - ...)**	Fan Filter

Legend:

CAPPRE:IEC - Component approval electrical:IEC
CAPPRE:ULCUL - Component approval electrical:UL/cUL
CAPPRM:AS1210 - Component approval mechanical:AS1210
CAPPRM:ASME - Component approval mechanical:ASME
CAPPRM:CE - Component approval mechanical:CE
CAPPRM:MHLW - Component approval mechanical:MHLW
CAPPRM:MOM - Component approval mechanical:MOM
COOL:AIR - Cooling:Air cooled
COOL:WATER - Cooling:Water cooled
FREQ:50HZ - Frequency:50 Hz
FREQ:60HZ - Frequency:60 Hz
IDRY:N - Integrated dryer:No
MODEL:GA90VP_16 - Model:GA 90VSD+
MOVOL:200V - Supply voltage:200 V
MOVOL:230V - Supply voltage:230 V
MOVOL:380V - Supply voltage:380 V
MOVOL:400V - Supply voltage:400 V
MOVOL:460V - Supply voltage:460 V
MOVOL:500V - Supply voltage:500 V
MOVOL:575V - Supply voltage:575 V

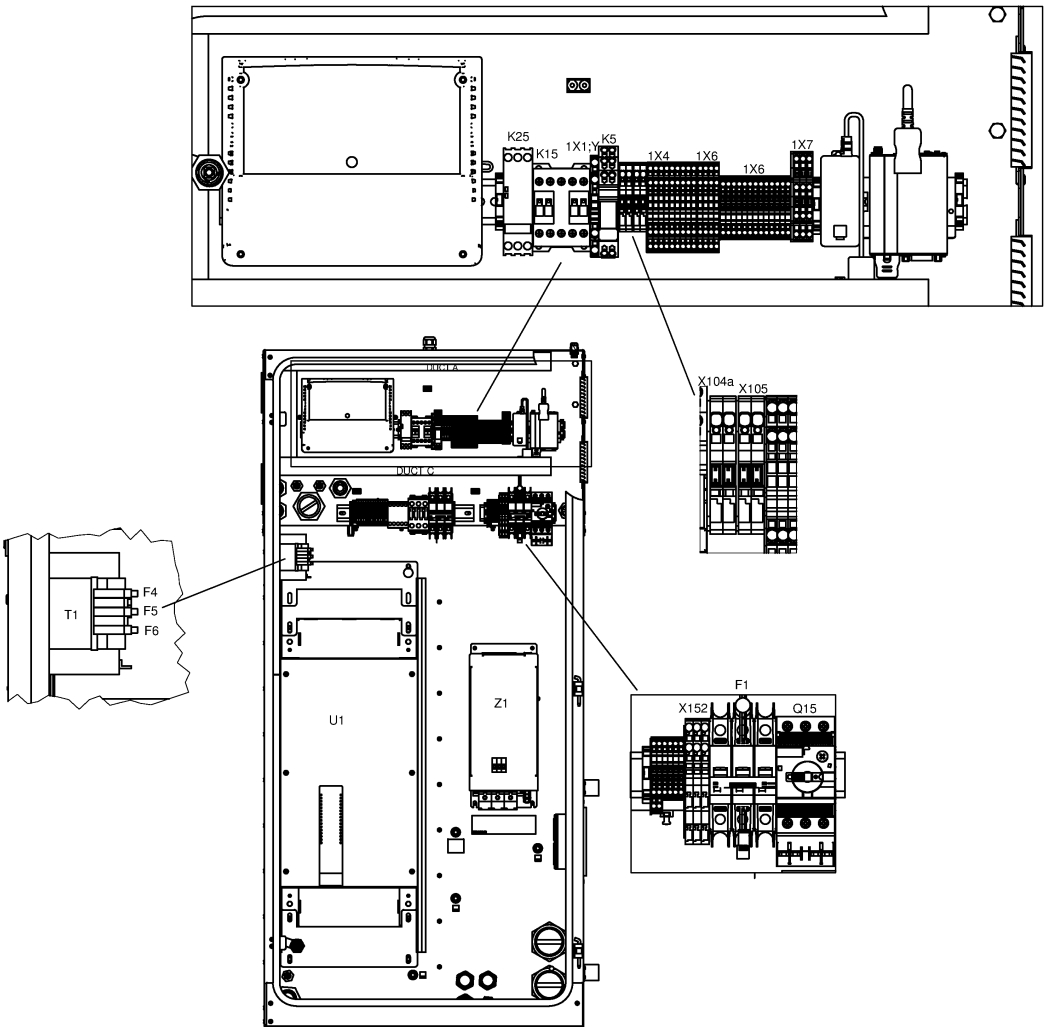
K25
K15
1X1:Y
K5
1X4
1X6
1X6
1X7
DUCT A
DUCT C
X104a
X105
T1
F4
F5
F6
U1
Z1
F1
X152
Q15

21.17 - Cubicle components GA 90 VSD+ - (200V-400V-500V/50Hz, 460V/60Hz - IEC, 230V-460V-575V/60Hz - UL-cUL) - Full-Feature (20/07/2017 - 11/12/2018)

(((MOVOL:200V , MOVOL:400V , MOVOL:500V) + FREQ:50HZ , FREQ:60HZ + MOVOL:460V) + CAPPRE:IEC , (MOVOL:230V , MOVOL:460V , MOVOL:575V) + CAPPRE:ULCUL + FREQ:60HZ) + IDRY:Y + MODEL:GA90VP_16

Ref	Part Number	Qty	Name	Validity	EL
	1900 2202 11	1	CUBICLE	**(20/07/2017 - 11/12/2018)**	
	9820 3000 21	1	CUBICLE LAYOUT	**(20/07/2017 - 20/08/2018)** ((((CAPPRM:AS1210 , CAPPRM:CE , CAPPRM:MHLW , CAPPRM:MOM) + MOVOL:400V , CAPPRM:CE + MOVOL:500V , CAPPRM:MHLW + MOVOL:200V) + FREQ:50HZ , (CAPPRM:ASME , CAPPRM:MHLW) + FREQ:60HZ + MOVOL:460V) + CAPPRE:IEC , (MOVOL:230V , MOVOL:460V , MOVOL:575V) + CAPPRE:ULCUL + CAPPRM:ASME + FREQ:60HZ) + COOL:AIR **(21/08/2018 - 11/12/2018)** ((((CAPPRM:AS1210 , CAPPRM:CE , CAPPRM:MHLW , CAPPRM:MOM) + MOVOL:400V , (CAPPRM:CE + MOVOL:500V , CAPPRM:MHLW + MOVOL:200V) + COOL:AIR) + FREQ:50HZ , (CAPPRM:ASME , CAPPRM:MHLW) + FREQ:60HZ + MOVOL:460V) + CAPPRE:IEC , ((MOVOL:230V , MOVOL:575V) + COOL:AIR , MOVOL:460V) + CAPPRE:ULCUL + CAPPRM:ASME + FREQ:60HZ)	
	9820 3000 22	1	SERVICE DIAGRAM	**(20/07/2017 - 20/08/2018)** ((((CAPPRM:AS1210 , CAPPRM:CE , CAPPRM:MHLW , CAPPRM:MOM) + MOVOL:400V , CAPPRM:CE + MOVOL:500V , CAPPRM:MHLW + MOVOL:200V) + FREQ:50HZ , (CAPPRM:ASME , CAPPRM:MHLW) + FREQ:60HZ + MOVOL:460V) + CAPPRE:IEC , (MOVOL:230V , MOVOL:460V , MOVOL:575V) + CAPPRE:ULCUL + CAPPRM:ASME + FREQ:60HZ) + COOL:AIR **(21/08/2018 - 11/12/2018)** ((((CAPPRM:AS1210 , CAPPRM:CE , CAPPRM:MHLW , CAPPRM:MOM) + MOVOL:400V , (CAPPRM:CE + MOVOL:500V , CAPPRM:MHLW + MOVOL:200V) + COOL:AIR) + FREQ:50HZ , (CAPPRM:ASME , CAPPRM:MHLW) + FREQ:60HZ + MOVOL:460V) + CAPPRE:IEC , ((MOVOL:230V , MOVOL:575V) + COOL:AIR , MOVOL:460V) + CAPPRE:ULCUL + CAPPRM:ASME + FREQ:60HZ)	
	1622 3798 70	1	WIRE HARNESS COMM CABLE	**(20/07/2017 - 20/08/2018)** ((((CAPPRM:AS1210 , CAPPRM:CE , CAPPRM:MHLW , CAPPRM:MOM) + MOVOL:400V , CAPPRM:CE + MOVOL:500V , CAPPRM:MHLW + MOVOL:200V) + FREQ:50HZ , (CAPPRM:ASME , CAPPRM:MHLW) + FREQ:60HZ + MOVOL:460V) + CAPPRE:IEC , (MOVOL:230V , MOVOL:460V , MOVOL:575V) + CAPPRE:ULCUL + CAPPRM:ASME + FREQ:60HZ) + COOL:AIR **(21/08/2018 - 11/12/2018)** ((((CAPPRM:AS1210 , CAPPRM:CE , CAPPRM:MHLW , CAPPRM:MOM) + MOVOL:400V , (CAPPRM:CE + MOVOL:500V , CAPPRM:MHLW + MOVOL:200V) + COOL:AIR) + FREQ:50HZ , (CAPPRM:ASME , CAPPRM:MHLW) + FREQ:60HZ + MOVOL:460V) + CAPPRE:IEC , ((MOVOL:230V , MOVOL:575V) + COOL:AIR , MOVOL:460V) + CAPPRE:ULCUL + CAPPRM:ASME + FREQ:60HZ)	

Legend:

CAPPRE:IEC - Component approval electrical:IEC
CAPPRE:ULCUL - Component approval electrical:UL/cUL
CAPPRM:AS1210 - Component approval mechanical:AS1210
CAPPRM:ASME - Component approval mechanical:ASME
CAPPRM:CE - Component approval mechanical:CE
CAPPRM:MHLW - Component approval mechanical:MHLW
CAPPRM:MOM - Component approval mechanical:MOM
COOL:AIR - Cooling:Air cooled
FREQ:50HZ - Frequency:50 Hz
FREQ:60HZ - Frequency:60 Hz
IDRY:Y - Integrated dryer:Yes
MODEL:GA90VP_16 - Model:GA 90VSD+
MOVOL:200V - Supply voltage:200 V
MOVOL:230V - Supply voltage:230 V
MOVOL:400V - Supply voltage:400 V
MOVOL:460V - Supply voltage:460 V
MOVOL:500V - Supply voltage:500 V
MOVOL:575V - Supply voltage:575 V

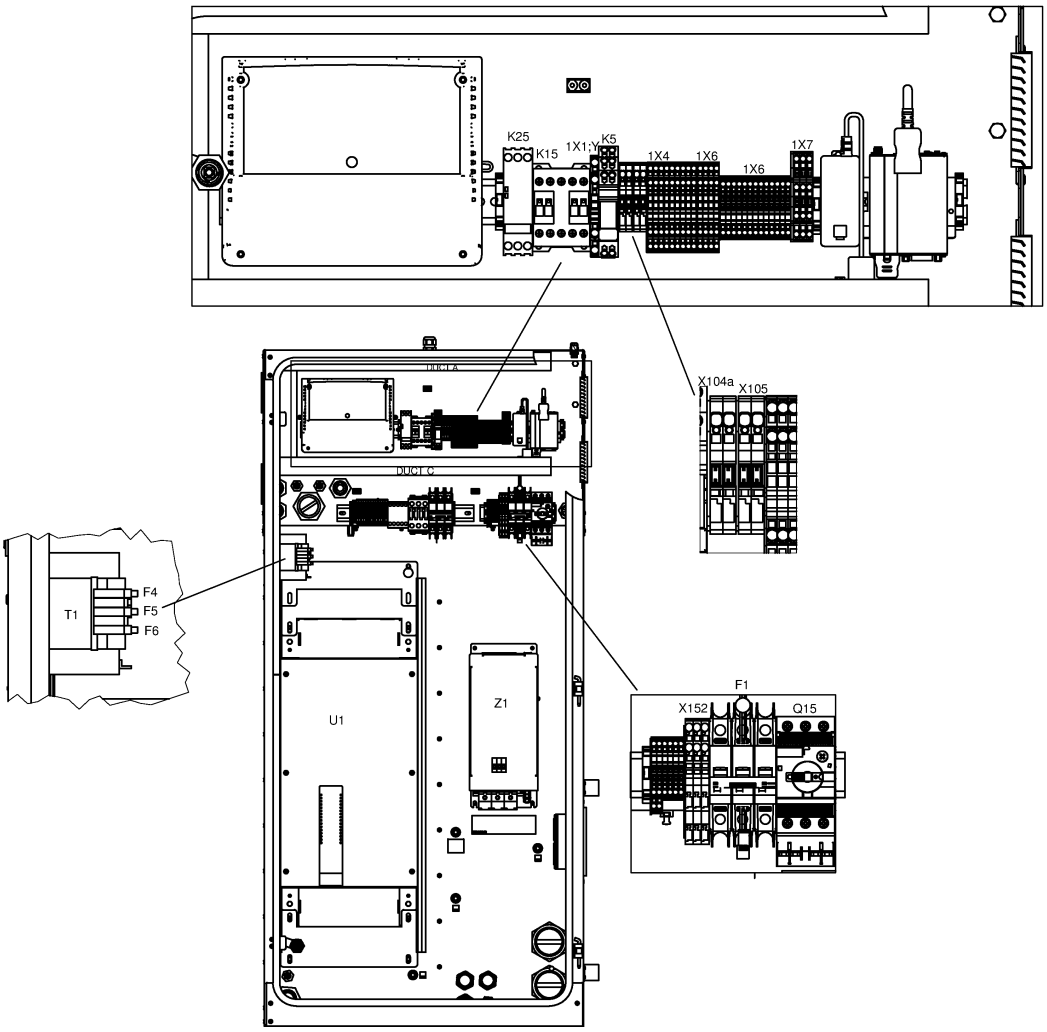
K25
K15
1X1:Y
K5
1X4
1X6
1X6
1X7
DUCT A
DUCT C
X104a
X105
T1
F4
F5
F6
U1
Z1
F1
X152
Q15

21.17 - Cubicle components GA 90 VSD+ - (200V-400V-500V/50Hz, 460V/60Hz - IEC, 230V-460V-575V/60Hz - UL-cUL) - Full-Feature (20/07/2017 - 11/12/2018)

(((MOVOL:200V , MOVOL:400V , MOVOL:500V) + FREQ:50HZ , FREQ:60HZ + MOVOL:460V) + CAPPRE:IEC , (MOVOL:230V , MOVOL:460V , MOVOL:575V) + CAPPRE:ULCUL + FREQ:60HZ) + IDRY:Y + MODEL:GA90VP_16

Ref	Part Number	Qty	Name	Validity	EL
	1622 5099 04	1	DI CHANE CABLE (1400MM)	**(20/07/2017 - 20/08/2018)** ((((CAPPRM:AS1210 , CAPPRM:CE , CAPPRM:MHLW , CAPPRM:MOM) + MOVOL:400V , CAPPRM:CE + MOVOL:500V , CAPPRM:MHLW + MOVOL:200V) + FREQ:50HZ , (CAPPRM:ASME , CAPPRM:MHLW) + FREQ:60HZ + MOVOL:460V) + CAPPRE:IEC , (MOVOL:230V , MOVOL:460V , MOVOL:575V) + CAPPRE:ULCUL + CAPPRM:ASME + FREQ:60HZ) + COOL:AIR **(21/08/2018 - 11/12/2018)** ((((CAPPRM:AS1210 , CAPPRM:CE , CAPPRM:MHLW , CAPPRM:MOM) + MOVOL:400V , (CAPPRM:CE + MOVOL:500V , CAPPRM:MHLW + MOVOL:200V) + COOL:AIR) + FREQ:50HZ , (CAPPRM:ASME , CAPPRM:MHLW) + FREQ:60HZ + MOVOL:460V) + CAPPRE:IEC , ((MOVOL:230V , MOVOL:575V) + COOL:AIR , MOVOL:460V) + CAPPRE:ULCUL + CAPPRM:ASME + FREQ:60HZ)	
	Electrical legend:	Comm Cable Loose supply			
	1649 8001 22	1	CUBICLE	**(20/07/2017 - 20/08/2018)** ((((CAPPRM:AS1210 , CAPPRM:CE , CAPPRM:MHLW , CAPPRM:MOM) + MOVOL:400V , CAPPRM:CE + MOVOL:500V , CAPPRM:MHLW + MOVOL:200V) + FREQ:50HZ , (CAPPRM:ASME , CAPPRM:MHLW) + FREQ:60HZ + MOVOL:460V) + CAPPRE:IEC , (MOVOL:230V , MOVOL:460V , MOVOL:575V) + CAPPRE:ULCUL + CAPPRM:ASME + FREQ:60HZ) + COOL:AIR **(21/08/2018 - 11/12/2018)** ((((CAPPRM:AS1210 , CAPPRM:CE , CAPPRM:MHLW , CAPPRM:MOM) + MOVOL:400V , (CAPPRM:CE + MOVOL:500V , CAPPRM:MHLW + MOVOL:200V) + COOL:AIR) + FREQ:50HZ , (CAPPRM:ASME , CAPPRM:MHLW) + FREQ:60HZ + MOVOL:460V) + CAPPRE:IEC , ((MOVOL:230V , MOVOL:575V) + COOL:AIR , MOVOL:460V) + CAPPRE:ULCUL + CAPPRM:ASME + FREQ:60HZ)	-
•	1202 6584 02	AR	SEAL		-
	1649 8001 32	1	PLATE NEOS "D"	**(20/07/2017 - 20/08/2018)** ((((CAPPRM:AS1210 , CAPPRM:CE , CAPPRM:MHLW , CAPPRM:MOM) + MOVOL:400V , CAPPRM:CE + MOVOL:500V , CAPPRM:MHLW + MOVOL:200V) + FREQ:50HZ , (CAPPRM:ASME , CAPPRM:MHLW) + FREQ:60HZ + MOVOL:460V) + CAPPRE:IEC , (MOVOL:230V , MOVOL:460V , MOVOL:575V) + CAPPRE:ULCUL + CAPPRM:ASME + FREQ:60HZ) + COOL:AIR **(21/08/2018 - 11/12/2018)** ((((CAPPRM:AS1210 , CAPPRM:CE , CAPPRM:MHLW , CAPPRM:MOM) + MOVOL:400V , (CAPPRM:CE + MOVOL:500V , CAPPRM:MHLW + MOVOL:200V) + COOL:AIR) + FREQ:50HZ , (CAPPRM:ASME , CAPPRM:MHLW) + FREQ:60HZ + MOVOL:460V) + CAPPRE:IEC , ((MOVOL:230V , MOVOL:575V) + COOL:AIR , MOVOL:460V) + CAPPRE:ULCUL + CAPPRM:ASME + FREQ:60HZ)	-

Legend:

CAPPRE:IEC - Component approval electrical:IEC
CAPPRE:ULCUL - Component approval electrical:UL/cUL
CAPPRM:AS1210 - Component approval mechanical:AS1210
CAPPRM:ASME - Component approval mechanical:ASME
CAPPRM:CE - Component approval mechanical:CE
CAPPRM:MHLW - Component approval mechanical:MHLW
CAPPRM:MOM - Component approval mechanical:MOM
COOL:AIR - Cooling:Air cooled
FREQ:50HZ - Frequency:50 Hz
FREQ:60HZ - Frequency:60 Hz
IDRY:Y - Integrated dryer:Yes
MODEL:GA90VP_16 - Model:GA 90VSD+
MOVOL:200V - Supply voltage:200 V
MOVOL:230V - Supply voltage:230 V
MOVOL:400V - Supply voltage:400 V
MOVOL:460V - Supply voltage:460 V
MOVOL:500V - Supply voltage:500 V
MOVOL:575V - Supply voltage:575 V

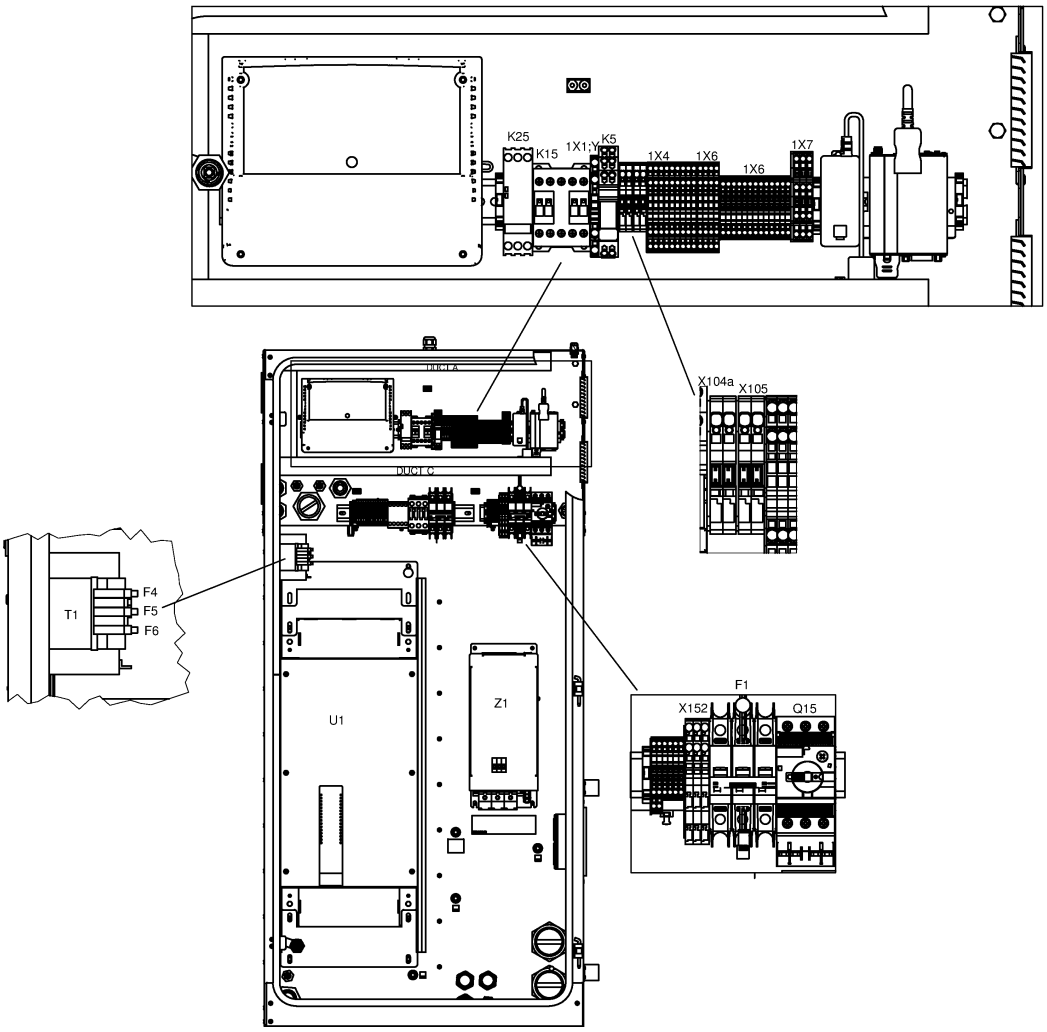
K25
K15
1X1:Y
K5
1X4
1X6
1X6
1X7
DUCT A
DUCT C
X104a
X105
T1
F4
F5
F6
U1
Z1
F1
X152
Q15

21.17 - Cubicle components GA 90 VSD+ - (200V-400V-500V/50Hz, 460V/60Hz - IEC, 230V-460V-575V/60Hz - UL-cUL) - Full-Feature (20/07/2017 - 11/12/2018)

(((MOVOL:200V , MOVOL:400V , MOVOL:500V) + FREQ:50HZ , FREQ:60HZ + MOVOL:460V) + CAPPRE:IEC , (MOVOL:230V , MOVOL:460V , MOVOL:575V) + CAPPRE:ULCUL + FREQ:60HZ) + IDRY:Y + MODEL:GA90VP_16

Ref	Part Number	Qty	Name	Validity	EL
	1649 8003 85	1	MOUNTING PLATE	**(20/07/2017 - 20/08/2018)** ((((CAPPRM:AS1210 , CAPPRM:CE , CAPPRM:MHLW , CAPPRM:MOM) + MOVOL:400V , CAPPRM:CE + MOVOL:500V , CAPPRM:MHLW + MOVOL:200V) + FREQ:50HZ , (CAPPRM:ASME , CAPPRM:MHLW) + FREQ:60HZ + MOVOL:460V) + CAPPRE:IEC , (MOVOL:230V , MOVOL:460V , MOVOL:575V) + CAPPRE:ULCUL + CAPPRM:ASME + FREQ:60HZ) + COOL:AIR **(21/08/2018 - 11/12/2018)** ((((CAPPRM:AS1210 , CAPPRM:CE , CAPPRM:MHLW , CAPPRM:MOM) + MOVOL:400V , (CAPPRM:CE + MOVOL:500V , CAPPRM:MHLW + MOVOL:200V) + COOL:AIR) + FREQ:50HZ , (CAPPRM:ASME , CAPPRM:MHLW) + FREQ:60HZ + MOVOL:460V) + CAPPRE:IEC , ((MOVOL:230V , MOVOL:575V) + COOL:AIR , MOVOL:460V) + CAPPRE:ULCUL + CAPPRM:ASME + FREQ:60HZ)	
	1649 8002 39	1	WIRE HARNESS	**(20/07/2017 - 20/08/2018)** ((((CAPPRM:AS1210 , CAPPRM:CE , CAPPRM:MHLW , CAPPRM:MOM) + MOVOL:400V , CAPPRM:CE + MOVOL:500V , CAPPRM:MHLW + MOVOL:200V) + FREQ:50HZ , (CAPPRM:ASME , CAPPRM:MHLW) + FREQ:60HZ + MOVOL:460V) + CAPPRE:IEC , (MOVOL:230V , MOVOL:460V , MOVOL:575V) + CAPPRE:ULCUL + CAPPRM:ASME + FREQ:60HZ) + COOL:AIR **(21/08/2018 - 11/12/2018)** ((((CAPPRM:AS1210 , CAPPRM:CE , CAPPRM:MHLW , CAPPRM:MOM) + MOVOL:400V , (CAPPRM:CE + MOVOL:500V , CAPPRM:MHLW + MOVOL:200V) + COOL:AIR) + FREQ:50HZ , (CAPPRM:ASME , CAPPRM:MHLW) + FREQ:60HZ + MOVOL:460V) + CAPPRE:IEC , ((MOVOL:230V , MOVOL:575V) + COOL:AIR , MOVOL:460V) + CAPPRE:ULCUL + CAPPRM:ASME + FREQ:60HZ)	
	Electrical legend:	Pressure switch (vessel) + pressure sensor vessel + pressure sensor outlet			
•	0698 5140 74	1	CABLE GLAND		
	1649 8002 40	1	WIRE HARNESS	**(20/07/2017 - 20/08/2018)** ((((CAPPRM:AS1210 , CAPPRM:CE , CAPPRM:MHLW , CAPPRM:MOM) + MOVOL:400V , CAPPRM:CE + MOVOL:500V , CAPPRM:MHLW + MOVOL:200V) + FREQ:50HZ , (CAPPRM:ASME , CAPPRM:MHLW) + FREQ:60HZ + MOVOL:460V) + CAPPRE:IEC , (MOVOL:230V , MOVOL:460V , MOVOL:575V) + CAPPRE:ULCUL + CAPPRM:ASME + FREQ:60HZ) + COOL:AIR **(21/08/2018 - 11/12/2018)** ((((CAPPRM:AS1210 , CAPPRM:CE , CAPPRM:MHLW , CAPPRM:MOM) + MOVOL:400V , (CAPPRM:CE + MOVOL:500V , CAPPRM:MHLW + MOVOL:200V) + COOL:AIR) + FREQ:50HZ , (CAPPRM:ASME , CAPPRM:MHLW) + FREQ:60HZ + MOVOL:460V) + CAPPRE:IEC , ((MOVOL:230V , MOVOL:575V) + COOL:AIR , MOVOL:460V) + CAPPRE:ULCUL + CAPPRM:ASME + FREQ:60HZ)	
	Electrical legend:	Temperature switch element outlet + solenoids + ambient sensor			
•	0698 5140 74	1	CABLE GLAND		

Legend:

CAPPRE:IEC - Component approval electrical:IEC
CAPPRE:ULCUL - Component approval electrical:UL/cUL
CAPPRM:AS1210 - Component approval mechanical:AS1210
CAPPRM:ASME - Component approval mechanical:ASME
CAPPRM:CE - Component approval mechanical:CE
CAPPRM:MHLW - Component approval mechanical:MHLW
CAPPRM:MOM - Component approval mechanical:MOM
COOL:AIR - Cooling:Air cooled
FREQ:50HZ - Frequency:50 Hz
FREQ:60HZ - Frequency:60 Hz
IDRY:Y - Integrated dryer:Yes
MODEL:GA90VP_16 - Model:GA 90VSD+
MOVOL:200V - Supply voltage:200 V
MOVOL:230V - Supply voltage:230 V
MOVOL:400V - Supply voltage:400 V
MOVOL:460V - Supply voltage:460 V
MOVOL:500V - Supply voltage:500 V
MOVOL:575V - Supply voltage:575 V

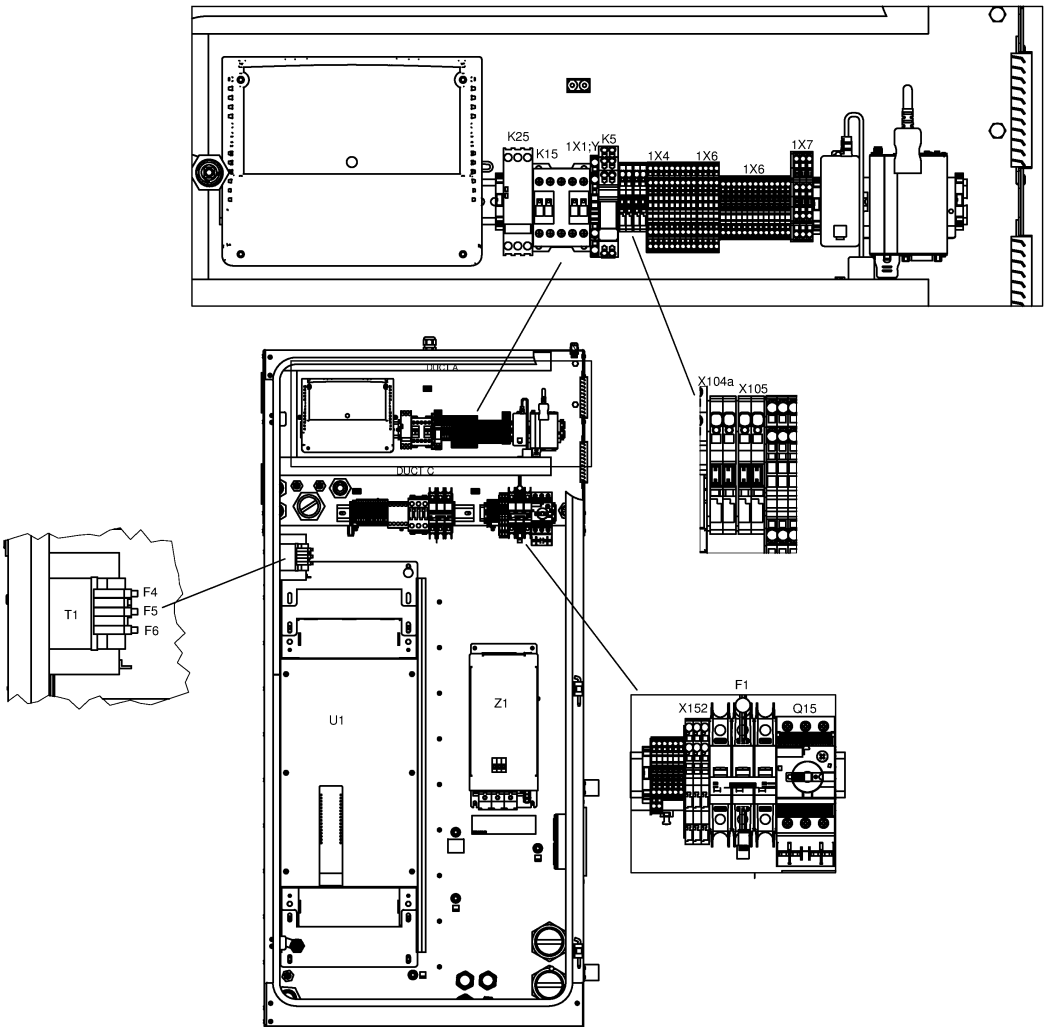
K25
K15
1X1:Y
K5
1X4
1X6
1X6
1X7
DUCT A
DUCT C
X104a
X105
T1
F4
F5
F6
U1
Z1
F1
X152
Q15

21.17 - Cubicle components GA 90 VSD+ - (200V-400V-500V/50Hz, 460V/60Hz - IEC, 230V-460V-575V/60Hz - UL-cUL) - Full-Feature (20/07/2017 - 11/12/2018)

(((MOVOL:200V , MOVOL:400V , MOVOL:500V) + FREQ:50HZ , FREQ:60HZ + MOVOL:460V) + CAPPRE:IEC , (MOVOL:230V , MOVOL:460V , MOVOL:575V) + CAPPRE:ULCUL + FREQ:60HZ) + IDRY:Y + MODEL:GA90VP_16

Ref	Part Number	Qty	Name	Validity	EL
	1649 8002 72	1	CABLE POWER	**(20/07/2017 - 20/08/2018)** ((((CAPPRM:AS1210 , CAPPRM:CE , CAPPRM:MHLW , CAPPRM:MOM) + MOVOL:400V , CAPPRM:CE + MOVOL:500V , CAPPRM:MHLW + MOVOL:200V) + FREQ:50HZ , (CAPPRM:ASME , CAPPRM:MHLW) + FREQ:60HZ + MOVOL:460V) + CAPPRE:IEC , (MOVOL:230V , MOVOL:460V , MOVOL:575V) + CAPPRE:ULCUL + CAPPRM:ASME + FREQ:60HZ) + COOL:AIR **(21/08/2018 - 11/12/2018)** ((((CAPPRM:AS1210 , CAPPRM:CE , CAPPRM:MHLW , CAPPRM:MOM) + MOVOL:400V , (CAPPRM:CE + MOVOL:500V , CAPPRM:MHLW + MOVOL:200V) + COOL:AIR) + FREQ:50HZ , (CAPPRM:ASME , CAPPRM:MHLW) + FREQ:60HZ + MOVOL:460V) + CAPPRE:IEC , ((MOVOL:230V , MOVOL:575V) + COOL:AIR , MOVOL:460V) + CAPPRE:ULCUL + CAPPRM:ASME + FREQ:60HZ)	
	Electrical legend:	Full feature (FF) Drain			
	1649 8002 73	1	WIRE HARNESS	**(20/07/2017 - 20/08/2018)** ((((CAPPRM:AS1210 , CAPPRM:CE , CAPPRM:MHLW , CAPPRM:MOM) + MOVOL:400V , CAPPRM:CE + MOVOL:500V , CAPPRM:MHLW + MOVOL:200V) + FREQ:50HZ , (CAPPRM:ASME , CAPPRM:MHLW) + FREQ:60HZ + MOVOL:460V) + CAPPRE:IEC , (MOVOL:230V , MOVOL:460V , MOVOL:575V) + CAPPRE:ULCUL + CAPPRM:ASME + FREQ:60HZ) + COOL:AIR **(21/08/2018 - 11/12/2018)** ((((CAPPRM:AS1210 , CAPPRM:CE , CAPPRM:MHLW , CAPPRM:MOM) + MOVOL:400V , (CAPPRM:CE + MOVOL:500V , CAPPRM:MHLW + MOVOL:200V) + COOL:AIR) + FREQ:50HZ , (CAPPRM:ASME , CAPPRM:MHLW) + FREQ:60HZ + MOVOL:460V) + CAPPRE:IEC , ((MOVOL:230V , MOVOL:575V) + COOL:AIR , MOVOL:460V) + CAPPRE:ULCUL + CAPPRM:ASME + FREQ:60HZ)	
	Electrical legend:	Pack Drain + Air filter switch			
•	0698 5140 74	1	CABLE GLAND		
	1649 8002 75	1	WIRE HARNESS	**(20/07/2017 - 20/08/2018)** ((((CAPPRM:AS1210 , CAPPRM:CE , CAPPRM:MHLW , CAPPRM:MOM) + MOVOL:400V , CAPPRM:CE + MOVOL:500V , CAPPRM:MHLW + MOVOL:200V) + FREQ:50HZ , (CAPPRM:ASME , CAPPRM:MHLW) + FREQ:60HZ + MOVOL:460V) + CAPPRE:IEC , (MOVOL:230V , MOVOL:460V , MOVOL:575V) + CAPPRE:ULCUL + CAPPRM:ASME + FREQ:60HZ) + COOL:AIR **(21/08/2018 - 11/12/2018)** ((((CAPPRM:AS1210 , CAPPRM:CE , CAPPRM:MHLW , CAPPRM:MOM) + MOVOL:400V , (CAPPRM:CE + MOVOL:500V , CAPPRM:MHLW + MOVOL:200V) + COOL:AIR) + FREQ:50HZ , (CAPPRM:ASME , CAPPRM:MHLW) + FREQ:60HZ + MOVOL:460V) + CAPPRE:IEC , ((MOVOL:230V , MOVOL:575V) + COOL:AIR , MOVOL:460V) + CAPPRE:ULCUL + CAPPRM:ASME + FREQ:60HZ)	
	Electrical legend:	Relative Humidity sensor			
•	~~1089 9320 09~~	1	RH SENSOR		
	Substituted by:	1089 9320 10 - TEMP. SENSOR (quantity: 1)			
•	0698 5140 75	1	CABLE GLAND		

Legend:

CAPPRE:IEC - Component approval electrical:IEC
CAPPRE:ULCUL - Component approval electrical:UL/cUL
CAPPRM:AS1210 - Component approval mechanical:AS1210
CAPPRM:ASME - Component approval mechanical:ASME
CAPPRM:CE - Component approval mechanical:CE
CAPPRM:MHLW - Component approval mechanical:MHLW
CAPPRM:MOM - Component approval mechanical:MOM
COOL:AIR - Cooling:Air cooled
FREQ:50HZ - Frequency:50 Hz
FREQ:60HZ - Frequency:60 Hz
IDRY:Y - Integrated dryer:Yes
MODEL:GA90VP_16 - Model:GA 90VSD+
MOVOL:200V - Supply voltage:200 V
MOVOL:230V - Supply voltage:230 V
MOVOL:400V - Supply voltage:400 V
MOVOL:460V - Supply voltage:460 V
MOVOL:500V - Supply voltage:500 V
MOVOL:575V - Supply voltage:575 V

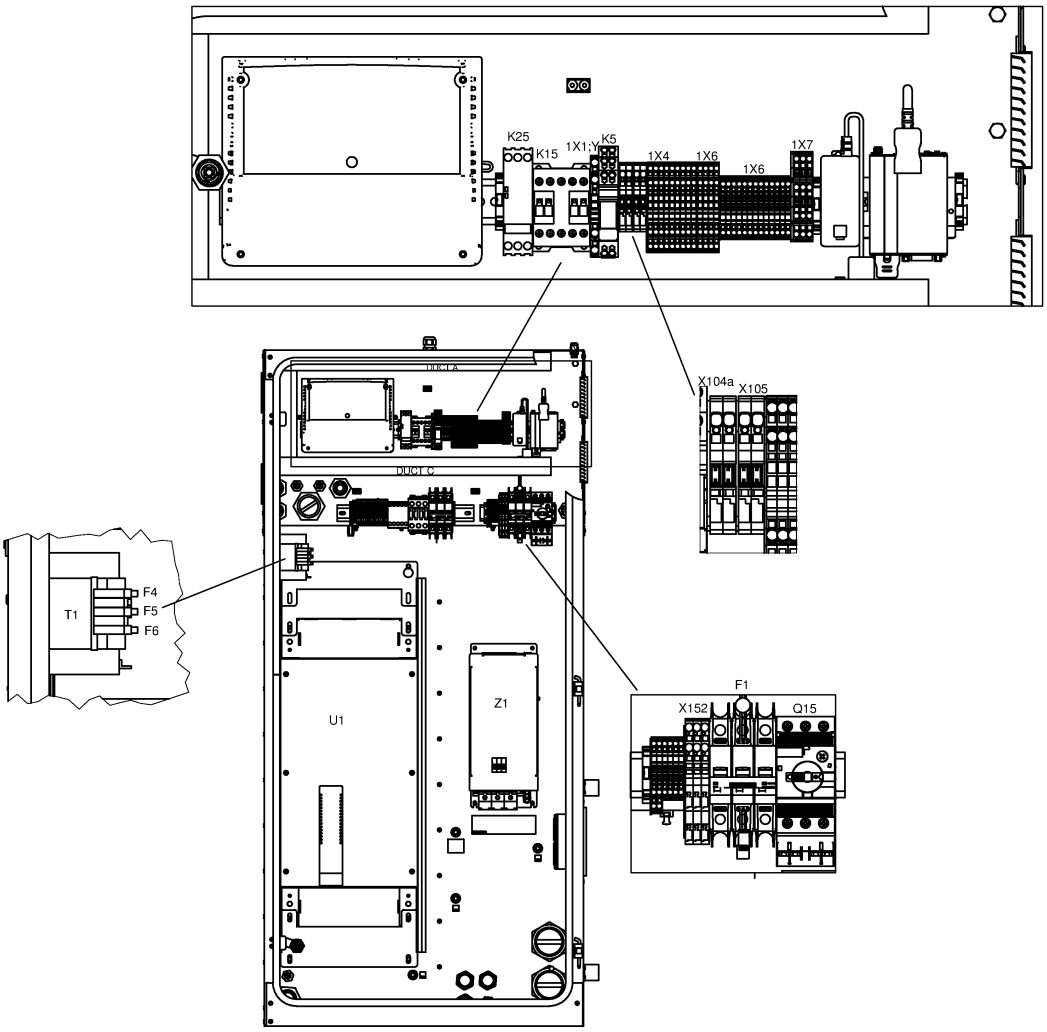
K25
K15
1X1:Y
K5
1X4
1X6
1X6
1X7
DUCT A
DUCT C
X104a
X105
T1
F4
F5
F6
U1
Z1
F1
X152
Q15

21.17 - Cubicle components GA 90 VSD+ - (200V-400V-500V/50Hz, 460V/60Hz - IEC, 230V-460V-575V/60Hz - UL-cUL) - Full-Feature (20/07/2017 - 11/12/2018)

(((MOVOL:200V , MOVOL:400V , MOVOL:500V) + FREQ:50HZ , FREQ:60HZ + MOVOL:460V) + CAPPRE:IEC , (MOVOL:230V , MOVOL:460V , MOVOL:575V) + CAPPRE:ULCUL + FREQ:60HZ) + IDRY:Y + MODEL:GA90VP_16

Ref	Part Number	Qty	Name	Validity	EL
	1649 8001 44	3	MOTOR CABLE	**(20/07/2017 - 20/08/2018)** ((((CAPPRM:AS1210 , CAPPRM:CE , CAPPRM:MHLW , CAPPRM:MOM) + MOVOL:400V , CAPPRM:CE + MOVOL:500V , CAPPRM:MHLW + MOVOL:200V) + FREQ:50HZ , (CAPPRM:ASME , CAPPRM:MHLW) + FREQ:60HZ + MOVOL:460V) + CAPPRE:IEC , (MOVOL:230V , MOVOL:460V , MOVOL:575V) + CAPPRE:ULCUL + CAPPRM:ASME + FREQ:60HZ) + COOL:AIR **(21/08/2018 - 11/12/2018)** ((((CAPPRM:AS1210 , CAPPRM:CE , CAPPRM:MHLW , CAPPRM:MOM) + MOVOL:400V , (CAPPRM:CE + MOVOL:500V , CAPPRM:MHLW + MOVOL:200V) + COOL:AIR) + FREQ:50HZ , (CAPPRM:ASME , CAPPRM:MHLW) + FREQ:60HZ + MOVOL:460V) + CAPPRE:IEC , ((MOVOL:230V , MOVOL:575V) + COOL:AIR , MOVOL:460V) + CAPPRE:ULCUL + CAPPRM:ASME + FREQ:60HZ)	-
	1649 8001 47	1	MOTOR CABLE	**(20/07/2017 - 20/08/2018)** ((((CAPPRM:AS1210 , CAPPRM:CE , CAPPRM:MHLW , CAPPRM:MOM) + MOVOL:400V , CAPPRM:CE + MOVOL:500V , CAPPRM:MHLW + MOVOL:200V) + FREQ:50HZ , (CAPPRM:ASME , CAPPRM:MHLW) + FREQ:60HZ + MOVOL:460V) + CAPPRE:IEC , (MOVOL:230V , MOVOL:460V , MOVOL:575V) + CAPPRE:ULCUL + CAPPRM:ASME + FREQ:60HZ) + COOL:AIR **(21/08/2018 - 11/12/2018)** ((((CAPPRM:AS1210 , CAPPRM:CE , CAPPRM:MHLW , CAPPRM:MOM) + MOVOL:400V , (CAPPRM:CE + MOVOL:500V , CAPPRM:MHLW + MOVOL:200V) + COOL:AIR) + FREQ:50HZ , (CAPPRM:ASME , CAPPRM:MHLW) + FREQ:60HZ + MOVOL:460V) + CAPPRE:IEC , ((MOVOL:230V , MOVOL:575V) + COOL:AIR , MOVOL:460V) + CAPPRE:ULCUL + CAPPRM:ASME + FREQ:60HZ)	
		1	DATA LABEL	**(20/07/2017 - 01/02/2018)** ((((CAPPRM:AS1210 , CAPPRM:CE , CAPPRM:MHLW , CAPPRM:MOM) + MOVOL:400V , CAPPRM:CE + MOVOL:500V , CAPPRM:MHLW + MOVOL:200V) + FREQ:50HZ , (CAPPRM:ASME , CAPPRM:MHLW) + FREQ:60HZ + MOVOL:460V) + CAPPRE:IEC , (MOVOL:230V , MOVOL:460V , MOVOL:575V) + CAPPRE:ULCUL + CAPPRM:ASME + FREQ:60HZ) + COOL:AIR	-
		1	DATA LABEL	**(02/02/2018 - 20/08/2018)** ((((CAPPRM:AS1210 , CAPPRM:CE , CAPPRM:MHLW , CAPPRM:MOM) + MOVOL:400V , CAPPRM:CE + MOVOL:500V , CAPPRM:MHLW + MOVOL:200V) + FREQ:50HZ , (CAPPRM:ASME , CAPPRM:MHLW) + FREQ:60HZ + MOVOL:460V) + CAPPRE:IEC , (MOVOL:230V , MOVOL:460V , MOVOL:575V) + CAPPRE:ULCUL + CAPPRM:ASME + FREQ:60HZ) + COOL:AIR **(21/08/2018 - 11/12/2018)** ((((CAPPRM:AS1210 , CAPPRM:CE , CAPPRM:MHLW , CAPPRM:MOM) + MOVOL:400V , (CAPPRM:CE + MOVOL:500V , CAPPRM:MHLW + MOVOL:200V) + COOL:AIR) + FREQ:50HZ , (CAPPRM:ASME , CAPPRM:MHLW) + FREQ:60HZ + MOVOL:460V) + CAPPRE:IEC , ((MOVOL:230V , MOVOL:575V) + COOL:AIR , MOVOL:460V) + CAPPRE:ULCUL + CAPPRM:ASME + FREQ:60HZ)	

Legend:

CAPPRE:IEC - Component approval electrical:IEC
CAPPRE:ULCUL - Component approval electrical:UL/cUL
CAPPRM:AS1210 - Component approval mechanical:AS1210
CAPPRM:ASME - Component approval mechanical:ASME
CAPPRM:CE - Component approval mechanical:CE
CAPPRM:MHLW - Component approval mechanical:MHLW
CAPPRM:MOM - Component approval mechanical:MOM
COOL:AIR - Cooling:Air cooled
FREQ:50HZ - Frequency:50 Hz
FREQ:60HZ - Frequency:60 Hz
IDRY:Y - Integrated dryer:Yes
MODEL:GA90VP_16 - Model:GA 90VSD+
MOVOL:200V - Supply voltage:200 V
MOVOL:230V - Supply voltage:230 V
MOVOL:400V - Supply voltage:400 V
MOVOL:460V - Supply voltage:460 V
MOVOL:500V - Supply voltage:500 V
MOVOL:575V - Supply voltage:575 V

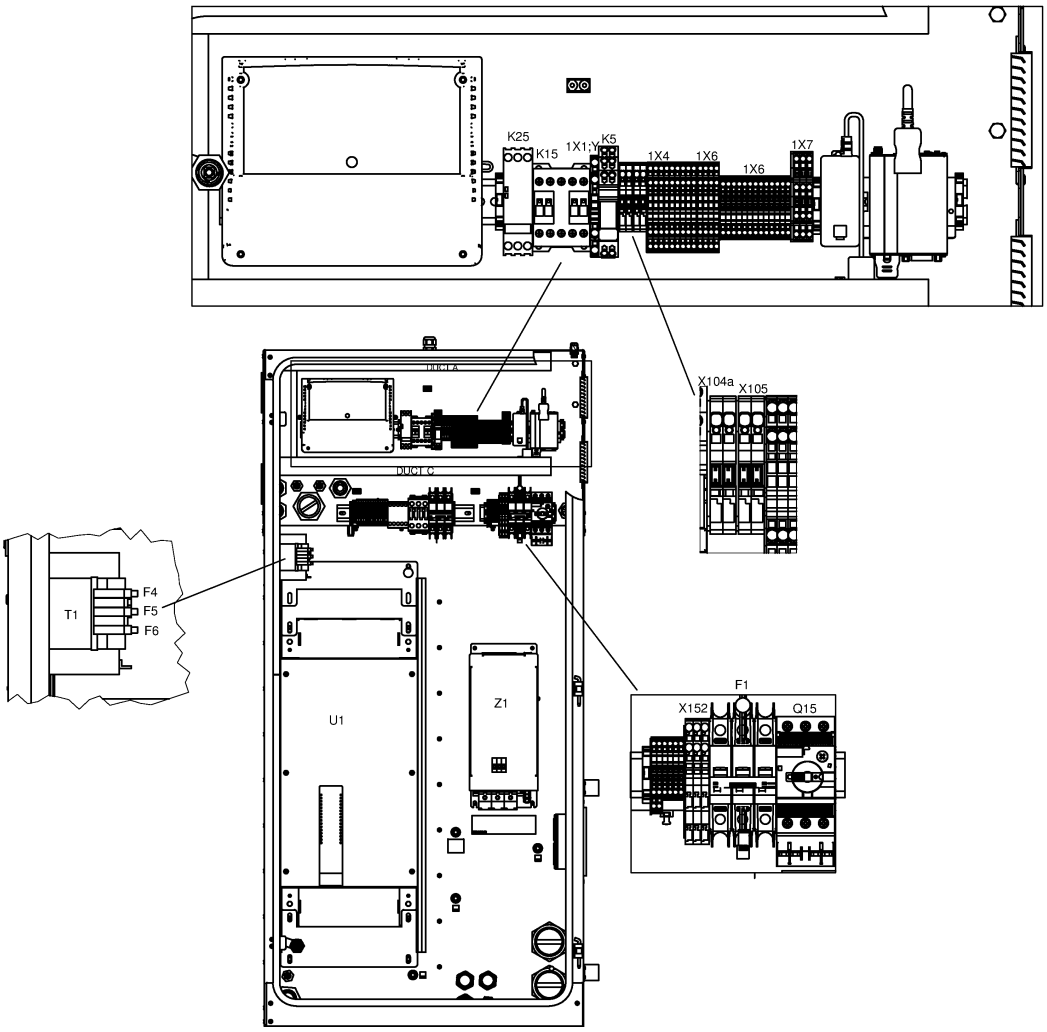
K25
K15
1X1:Y
K5
1X4
1X6
1X6
1X7
DUCT A
DUCT C
X104a
X105
T1
F4
F5
F6
U1
Z1
F1
X152
Q15

21.17 - Cubicle components GA 90 VSD+ - (200V-400V-500V/50Hz, 460V/60Hz - IEC, 230V-460V-575V/60Hz - UL-cUL) - Full-Feature (20/07/2017 - 11/12/2018)

(((MOVOL:200V , MOVOL:400V , MOVOL:500V) + FREQ:50HZ , FREQ:60HZ + MOVOL:460V) + CAPPRE:IEC , (MOVOL:230V , MOVOL:460V , MOVOL:575V) + CAPPRE:ULCUL + FREQ:60HZ) + IDRY:Y + MODEL:GA90VP_16

Ref	Part Number	Qty	Name	Validity	EL
	1079 9901 68	1	WARNING LABEL	**(20/07/2017 - 20/08/2018)** ((((CAPPRM:AS1210 , CAPPRM:CE , CAPPRM:MHLW , CAPPRM:MOM) + MOVOL:400V , CAPPRM:CE + MOVOL:500V , CAPPRM:MHLW + MOVOL:200V) + FREQ:50HZ , (CAPPRM:ASME , CAPPRM:MHLW) + FREQ:60HZ + MOVOL:460V) + CAPPRE:IEC , (MOVOL:230V , MOVOL:460V , MOVOL:575V) + CAPPRE:ULCUL + CAPPRM:ASME + FREQ:60HZ) + COOL:AIR **(21/08/2018 - 11/12/2018)** ((((CAPPRM:AS1210 , CAPPRM:CE , CAPPRM:MHLW , CAPPRM:MOM) + MOVOL:400V , (CAPPRM:CE + MOVOL:500V , CAPPRM:MHLW + MOVOL:200V) + COOL:AIR) + FREQ:50HZ , (CAPPRM:ASME , CAPPRM:MHLW) + FREQ:60HZ + MOVOL:460V) + CAPPRE:IEC , ((MOVOL:230V , MOVOL:575V) + COOL:AIR , MOVOL:460V) + CAPPRE:ULCUL + CAPPRM:ASME + FREQ:60HZ)	-
	1900 5350 14	1	INVERTER	**(20/07/2017 - 20/08/2018)** ((((CAPPRM:AS1210 , CAPPRM:CE , CAPPRM:MHLW , CAPPRM:MOM) + MOVOL:400V , CAPPRM:CE + MOVOL:500V , CAPPRM:MHLW + MOVOL:200V) + FREQ:50HZ , (CAPPRM:ASME , CAPPRM:MHLW) + FREQ:60HZ + MOVOL:460V) + CAPPRE:IEC , (MOVOL:230V , MOVOL:460V , MOVOL:575V) + CAPPRE:ULCUL + CAPPRM:ASME + FREQ:60HZ) + COOL:AIR **(21/08/2018 - 11/12/2018)** ((((CAPPRM:AS1210 , CAPPRM:CE , CAPPRM:MHLW , CAPPRM:MOM) + MOVOL:400V , (CAPPRM:CE + MOVOL:500V , CAPPRM:MHLW + MOVOL:200V) + COOL:AIR) + FREQ:50HZ , (CAPPRM:ASME , CAPPRM:MHLW) + FREQ:60HZ + MOVOL:460V) + CAPPRE:IEC , ((MOVOL:230V , MOVOL:575V) + COOL:AIR , MOVOL:460V) + CAPPRE:ULCUL + CAPPRM:ASME + FREQ:60HZ)	U1
	1631 2079 00	1	NANOPERMRING	**(20/07/2017 - 20/08/2018)** ((((CAPPRM:AS1210 , CAPPRM:CE , CAPPRM:MHLW , CAPPRM:MOM) + MOVOL:400V , CAPPRM:CE + MOVOL:500V , CAPPRM:MHLW + MOVOL:200V) + FREQ:50HZ , (CAPPRM:ASME , CAPPRM:MHLW) + FREQ:60HZ + MOVOL:460V) + CAPPRE:IEC , (MOVOL:230V , MOVOL:460V , MOVOL:575V) + CAPPRE:ULCUL + CAPPRM:ASME + FREQ:60HZ) + COOL:AIR **(21/08/2018 - 11/12/2018)** ((((CAPPRM:AS1210 , CAPPRM:CE , CAPPRM:MHLW , CAPPRM:MOM) + MOVOL:400V , (CAPPRM:CE + MOVOL:500V , CAPPRM:MHLW + MOVOL:200V) + COOL:AIR) + FREQ:50HZ , (CAPPRM:ASME , CAPPRM:MHLW) + FREQ:60HZ + MOVOL:460V) + CAPPRE:IEC , ((MOVOL:230V , MOVOL:575V) + COOL:AIR , MOVOL:460V) + CAPPRE:ULCUL + CAPPRM:ASME + FREQ:60HZ)	-
	0697 9811 17	2	PLUG	**(20/07/2017 - 20/08/2018)** ((((CAPPRM:AS1210 , CAPPRM:CE , CAPPRM:MHLW , CAPPRM:MOM) + MOVOL:400V , CAPPRM:CE + MOVOL:500V , CAPPRM:MHLW + MOVOL:200V) + FREQ:50HZ , (CAPPRM:ASME , CAPPRM:MHLW) + FREQ:60HZ + MOVOL:460V) + CAPPRE:IEC , (MOVOL:230V , MOVOL:460V , MOVOL:575V) + CAPPRE:ULCUL + CAPPRM:ASME + FREQ:60HZ) + COOL:AIR **(21/08/2018 - 11/12/2018)** ((((CAPPRM:AS1210 , CAPPRM:CE , CAPPRM:MHLW , CAPPRM:MOM) + MOVOL:400V , (CAPPRM:CE + MOVOL:500V , CAPPRM:MHLW + MOVOL:200V) + COOL:AIR) + FREQ:50HZ , (CAPPRM:ASME , CAPPRM:MHLW) + FREQ:60HZ + MOVOL:460V) + CAPPRE:IEC , ((MOVOL:230V , MOVOL:575V) + COOL:AIR , MOVOL:460V) + CAPPRE:ULCUL + CAPPRM:ASME + FREQ:60HZ)	

Legend:

CAPPRE:IEC - Component approval electrical:IEC
CAPPRE:ULCUL - Component approval electrical:UL/cUL
CAPPRM:AS1210 - Component approval mechanical:AS1210
CAPPRM:ASME - Component approval mechanical:ASME
CAPPRM:CE - Component approval mechanical:CE
CAPPRM:MHLW - Component approval mechanical:MHLW
CAPPRM:MOM - Component approval mechanical:MOM
COOL:AIR - Cooling:Air cooled
FREQ:50HZ - Frequency:50 Hz
FREQ:60HZ - Frequency:60 Hz
IDRY:Y - Integrated dryer:Yes
MODEL:GA90VP_16 - Model:GA 90VSD+
MOVOL:200V - Supply voltage:200 V
MOVOL:230V - Supply voltage:230 V
MOVOL:400V - Supply voltage:400 V
MOVOL:460V - Supply voltage:460 V
MOVOL:500V - Supply voltage:500 V
MOVOL:575V - Supply voltage:575 V

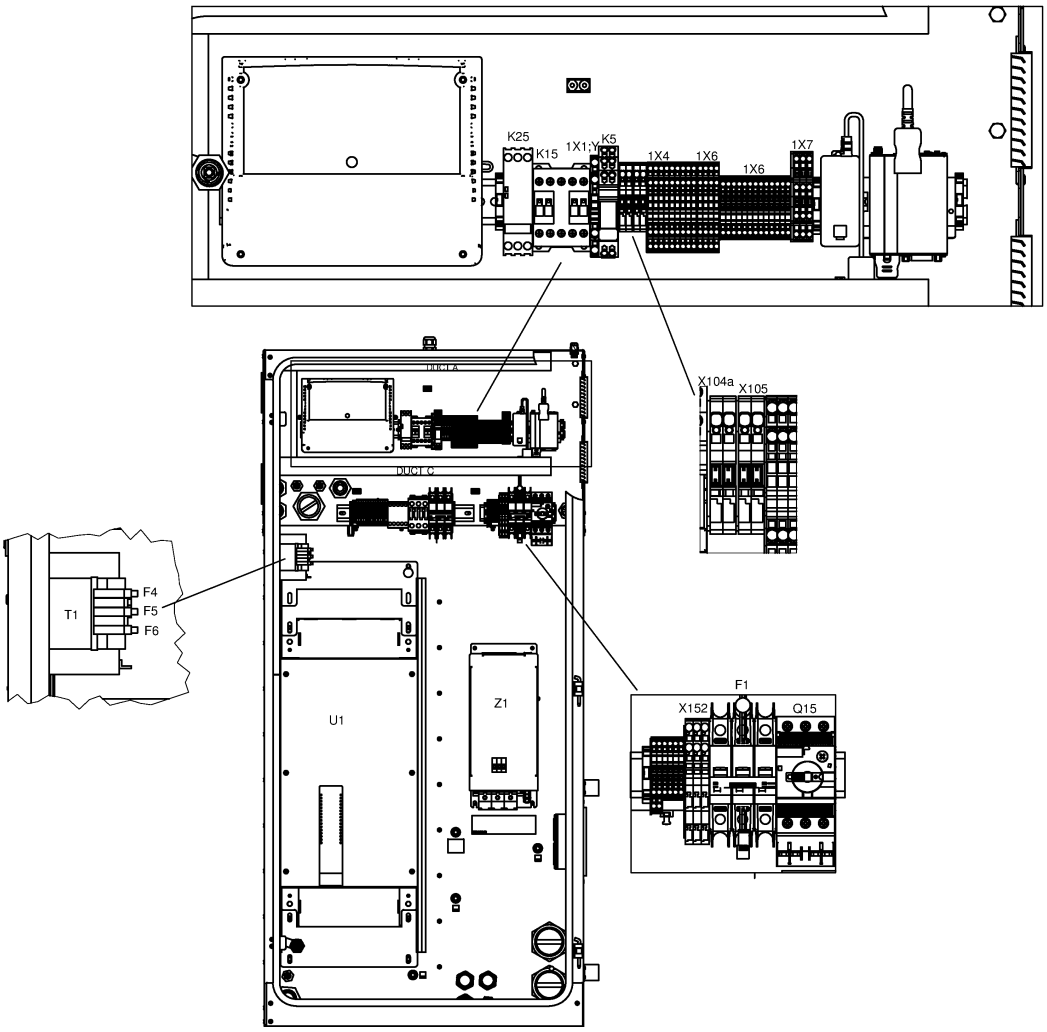
K25
K15
1X1:Y
K5
1X4
1X6
1X6
1X7
DUCT A
DUCT C
X104a
X105
T1
F4
F5
F6
U1
Z1
F1
X152
Q15

Ref	Part Number	Qty	Name	Validity	EL
	Electrical legend:	Plug for transfo supply			
	0989 3700 48	2	NUT	**(20/07/2017 - 20/08/2018)** ((((CAPPRM:AS1210 , CAPPRM:CE , CAPPRM:MHLW , CAPPRM:MOM) + MOVOL:400V , CAPPRM:CE + MOVOL:500V , CAPPRM:MHLW + MOVOL:200V) + FREQ:50HZ , (CAPPRM:ASME , CAPPRM:MHLW) + FREQ:60HZ + MOVOL:460V) + CAPPRE:IEC , (MOVOL:230V , MOVOL:460V , MOVOL:575V) + CAPPRE:ULCUL + CAPPRM:ASME + FREQ:60HZ) + COOL:AIR **(21/08/2018 - 11/12/2018)** ((((CAPPRM:AS1210 , CAPPRM:CE , CAPPRM:MHLW , CAPPRM:MOM) + MOVOL:400V , (CAPPRM:CE + MOVOL:500V , CAPPRM:MHLW + MOVOL:200V) + COOL:AIR) + FREQ:50HZ , (CAPPRM:ASME , CAPPRM:MHLW) + FREQ:60HZ + MOVOL:460V) + CAPPRE:IEC , ((MOVOL:230V , MOVOL:575V) + COOL:AIR , MOVOL:460V) + CAPPRE:ULCUL + CAPPRM:ASME + FREQ:60HZ)	
	Electrical legend:	Nut for transfo supply			
	0698 5140 72	1	CABLE GLAND	**(20/07/2017 - 20/08/2018)** ((((CAPPRM:AS1210 , CAPPRM:CE , CAPPRM:MHLW , CAPPRM:MOM) + MOVOL:400V , CAPPRM:CE + MOVOL:500V , CAPPRM:MHLW + MOVOL:200V) + FREQ:50HZ , (CAPPRM:ASME , CAPPRM:MHLW) + FREQ:60HZ + MOVOL:460V) + CAPPRE:IEC , (MOVOL:230V , MOVOL:460V , MOVOL:575V) + CAPPRE:ULCUL + CAPPRM:ASME + FREQ:60HZ) + COOL:AIR **(21/08/2018 - 11/12/2018)** ((((CAPPRM:AS1210 , CAPPRM:CE , CAPPRM:MHLW , CAPPRM:MOM) + MOVOL:400V , (CAPPRM:CE + MOVOL:500V , CAPPRM:MHLW + MOVOL:200V) + COOL:AIR) + FREQ:50HZ , (CAPPRM:ASME , CAPPRM:MHLW) + FREQ:60HZ + MOVOL:460V) + CAPPRE:IEC , ((MOVOL:230V , MOVOL:575V) + COOL:AIR , MOVOL:460V) + CAPPRE:ULCUL + CAPPRM:ASME + FREQ:60HZ)	Fan
	0698 5140 71	1	CABLE GLAND	**(20/07/2017 - 20/08/2018)** ((((CAPPRM:AS1210 , CAPPRM:CE , CAPPRM:MHLW , CAPPRM:MOM) + MOVOL:400V , CAPPRM:CE + MOVOL:500V , CAPPRM:MHLW + MOVOL:200V) + FREQ:50HZ , (CAPPRM:ASME , CAPPRM:MHLW) + FREQ:60HZ + MOVOL:460V) + CAPPRE:IEC , (MOVOL:230V , MOVOL:460V , MOVOL:575V) + CAPPRE:ULCUL + CAPPRM:ASME + FREQ:60HZ) + COOL:AIR **(21/08/2018 - 11/12/2018)** ((((CAPPRM:AS1210 , CAPPRM:CE , CAPPRM:MHLW , CAPPRM:MOM) + MOVOL:400V , (CAPPRM:CE + MOVOL:500V , CAPPRM:MHLW + MOVOL:200V) + COOL:AIR) + FREQ:50HZ , (CAPPRM:ASME , CAPPRM:MHLW) + FREQ:60HZ + MOVOL:460V) + CAPPRE:IEC , ((MOVOL:230V , MOVOL:575V) + COOL:AIR , MOVOL:460V) + CAPPRE:ULCUL + CAPPRM:ASME + FREQ:60HZ)	
	Electrical legend:	Ambient sensor			

Legend:

CAPPRE:IEC - Component approval electrical:IEC
CAPPRM:ASME - Component approval mechanical:ASME
CAPPRM:MOM - Component approval mechanical:MOM
FREQ:60HZ - Frequency:60 Hz
MOVOL:200V - Supply voltage:200 V
MOVOL:460V - Supply voltage:460 V
CAPPRE:ULCUL - Component approval electrical:UL/cUL
CAPPRM:CE - Component approval mechanical:CE
COOL:AIR - Cooling:Air cooled
IDRY:Y - Integrated dryer:Yes
MOVOL:230V - Supply voltage:230 V
MOVOL:500V - Supply voltage:500 V
CAPPRM:AS1210 - Component approval mechanical:AS1210
CAPPRM:MHLW - Component approval mechanical:MHLW
FREQ:50HZ - Frequency:50 Hz
MODEL:GA90VP_16 - Model:GA 90VSD+
MOVOL:400V - Supply voltage:400 V
MOVOL:575V - Supply voltage:575 V

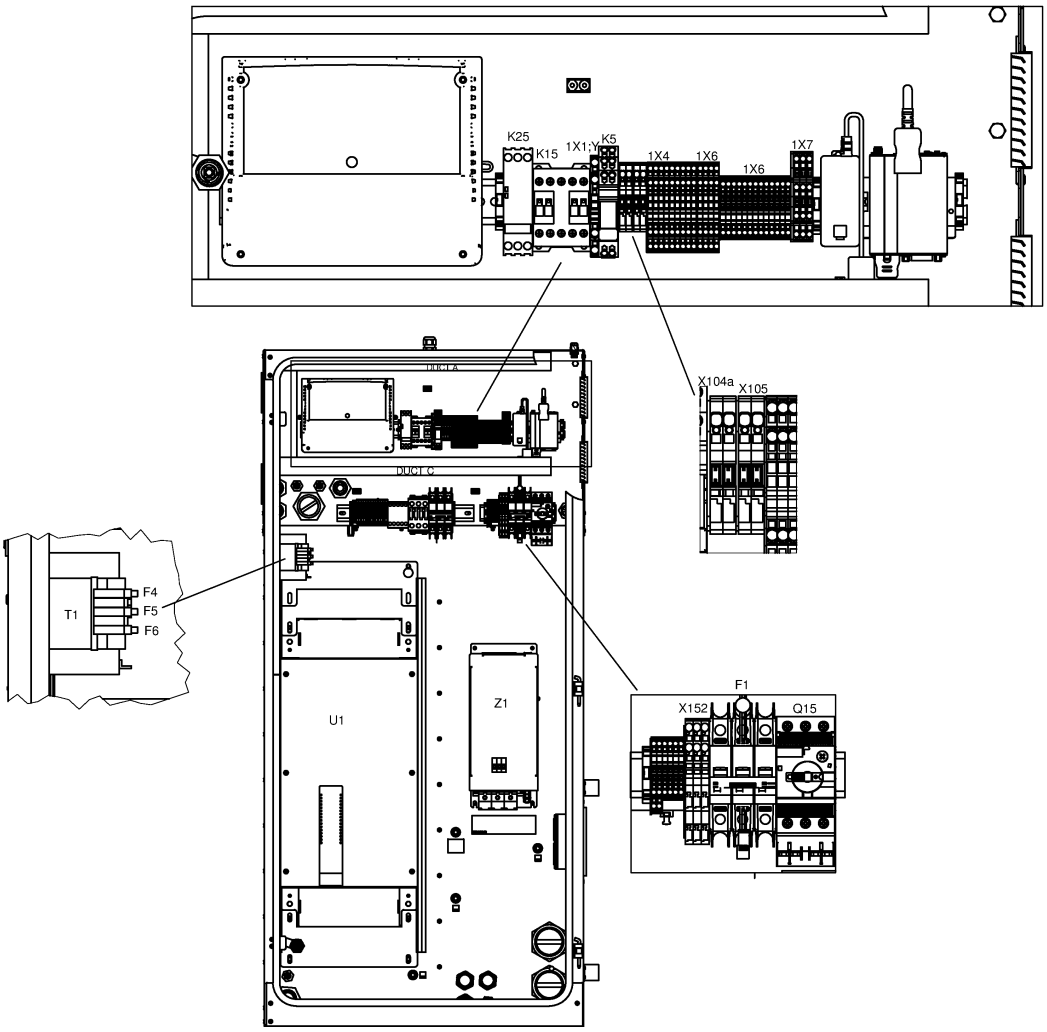
K25
K15
1X1:Y
K5
1X4
1X6
1X6
1X7
DUCT A
DUCT C
X104a
X105
T1
F4
F5
F6
U1
Z1
F1
X152
Q15

21.17 - Cubicle components GA 90 VSD+ - (200V-400V-500V/50Hz, 460V/60Hz - IEC, 230V-460V-575V/60Hz - UL-cUL) - Full-Feature (20/07/2017 - 11/12/2018)

(((MOVOL:200V , MOVOL:400V , MOVOL:500V) + FREQ:50HZ , FREQ:60HZ + MOVOL:460V) + CAPPRE:IEC , (MOVOL:230V , MOVOL:460V , MOVOL:575V) + CAPPRE:ULCUL + FREQ:60HZ) + IDRY:Y + MODEL:GA90VP_16

Ref	Part Number	Qty	Name	Validity	EL
	0697 9809 20	1	LOCKNUT	**(20/07/2017 - 20/08/2018)** ((((CAPPRM:AS1210 , CAPPRM:CE , CAPPRM:MHLW , CAPPRM:MOM) + MOVOL:400V , CAPPRM:CE + MOVOL:500V , CAPPRM:MHLW + MOVOL:200V) + FREQ:50HZ , (CAPPRM:ASME , CAPPRM:MHLW) + FREQ:60HZ + MOVOL:460V) + CAPPRE:IEC , (MOVOL:230V , MOVOL:460V , MOVOL:575V) + CAPPRE:ULCUL + CAPPRM:ASME + FREQ:60HZ) + COOL:AIR **(21/08/2018 - 11/12/2018)** ((((CAPPRM:AS1210 , CAPPRM:CE , CAPPRM:MHLW , CAPPRM:MOM) + MOVOL:400V , (CAPPRM:CE + MOVOL:500V , CAPPRM:MHLW + MOVOL:200V) + COOL:AIR) + FREQ:50HZ , (CAPPRM:ASME , CAPPRM:MHLW) + FREQ:60HZ + MOVOL:460V) + CAPPRE:IEC , ((MOVOL:230V , MOVOL:575V) + COOL:AIR , MOVOL:460V) + CAPPRE:ULCUL + CAPPRM:ASME + FREQ:60HZ)	
	Electrical legend:	Ambient sensor			
	1089 9556 44	1	FAN WITH FILTER	**(20/07/2017 - 20/08/2018)** ((((CAPPRM:AS1210 , CAPPRM:CE , CAPPRM:MHLW , CAPPRM:MOM) + MOVOL:400V , CAPPRM:CE + MOVOL:500V , CAPPRM:MHLW + MOVOL:200V) + FREQ:50HZ , (CAPPRM:ASME , CAPPRM:MHLW) + FREQ:60HZ + MOVOL:460V) + CAPPRE:IEC , (MOVOL:230V , MOVOL:460V , MOVOL:575V) + CAPPRE:ULCUL + CAPPRM:ASME + FREQ:60HZ) + COOL:AIR **(21/08/2018 - 11/12/2018)** ((((CAPPRM:AS1210 , CAPPRM:CE , CAPPRM:MHLW , CAPPRM:MOM) + MOVOL:400V , (CAPPRM:CE + MOVOL:500V , CAPPRM:MHLW + MOVOL:200V) + COOL:AIR) + FREQ:50HZ , (CAPPRM:ASME , CAPPRM:MHLW) + FREQ:60HZ + MOVOL:460V) + CAPPRE:IEC , ((MOVOL:230V , MOVOL:575V) + COOL:AIR , MOVOL:460V) + CAPPRE:ULCUL + CAPPRM:ASME + FREQ:60HZ)	Cubicle fan
		4	AIR INLET W/O FILTER	**(20/07/2017 - 20/08/2018)** ((((CAPPRM:AS1210 , CAPPRM:CE , CAPPRM:MHLW , CAPPRM:MOM) + MOVOL:400V , CAPPRM:CE + MOVOL:500V , CAPPRM:MHLW + MOVOL:200V) + FREQ:50HZ , (CAPPRM:ASME , CAPPRM:MHLW) + FREQ:60HZ + MOVOL:460V) + CAPPRE:IEC , (MOVOL:230V , MOVOL:460V , MOVOL:575V) + CAPPRE:ULCUL + CAPPRM:ASME + FREQ:60HZ) + COOL:AIR **(21/08/2018 - 11/12/2018)** ((((CAPPRM:AS1210 , CAPPRM:CE , CAPPRM:MHLW , CAPPRM:MOM) + MOVOL:400V , (CAPPRM:CE + MOVOL:500V , CAPPRM:MHLW + MOVOL:200V) + COOL:AIR) + FREQ:50HZ , (CAPPRM:ASME , CAPPRM:MHLW) + FREQ:60HZ + MOVOL:460V) + CAPPRE:IEC , ((MOVOL:230V , MOVOL:575V) + COOL:AIR , MOVOL:460V) + CAPPRE:ULCUL + CAPPRM:ASME + FREQ:60HZ)	-
	Service kits:	2901 9901 02 - PREVENTIVE MAINTENANCE KIT - GA 90 VSD+, GA 110 VSD+ 2901 9900 96 - AIR FILTER KIT - GA 90 VSD+, GA 110 VSD+			

Legend:

CAPPRE:IEC - Component approval electrical:IEC	CAPPRE:ULCUL - Component approval electrical:UL/cUL	CAPPRM:AS1210 - Component approval mechanical:AS1210
CAPPRM:ASME - Component approval mechanical:ASME	CAPPRM:CE - Component approval mechanical:CE	CAPPRM:MHLW - Component approval mechanical:MHLW
CAPPRM:MOM - Component approval mechanical:MOM	COOL:AIR - Cooling:Air cooled	FREQ:50HZ - Frequency:50 Hz
FREQ:60HZ - Frequency:60 Hz	IDRY:Y - Integrated dryer:Yes	MODEL:GA90VP_16 - Model:GA 90VSD+
MOVOL:200V - Supply voltage:200 V	MOVOL:230V - Supply voltage:230 V	MOVOL:400V - Supply voltage:400 V
MOVOL:460V - Supply voltage:460 V	MOVOL:500V - Supply voltage:500 V	MOVOL:575V - Supply voltage:575 V

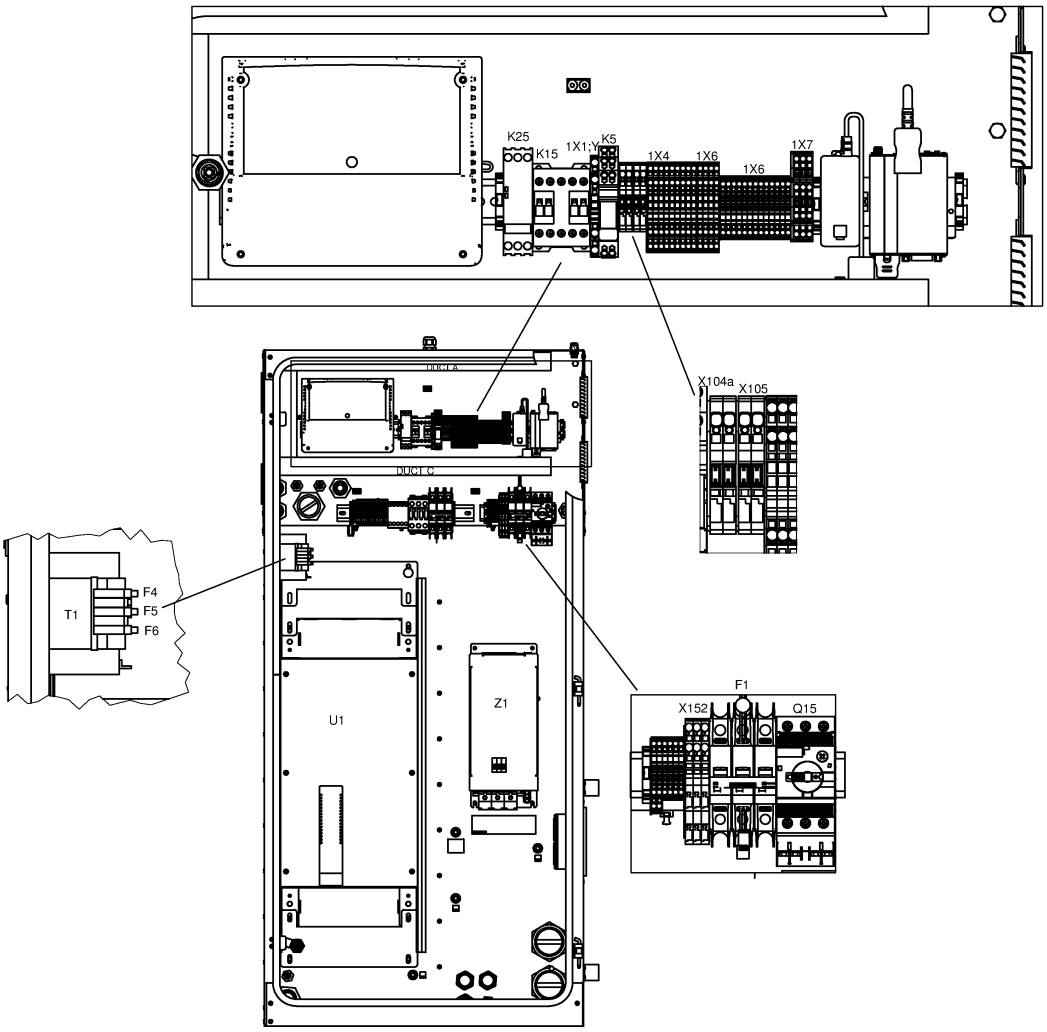
K25
K15
1X1:Y
K5
1X4
1X6
1X6
1X7
DUCT A
DUCT C
X104a
X105
T1
F4
F5
F6
U1
Z1
F1
X152
Q15

21.17 - Cubicle components GA 90 VSD+ - (200V-400V-500V/50Hz, 460V/60Hz - IEC, 230V-460V-575V/60Hz - UL-cUL) - Full-Feature (20/07/2017 - 11/12/2018)

(((MOVOL:200V , MOVOL:400V , MOVOL:500V) + FREQ:50HZ , FREQ:60HZ + MOVOL:460V) + CAPPRE:IEC , (MOVOL:230V , MOVOL:460V , MOVOL:575V) + CAPPRE:ULCUL + FREQ:60HZ) + IDRY:Y + MODEL:GA90VP_16

Ref	Part Number	Qty	Name	Validity	EL
	1088 0032 09	1	CONNECTOR	**(20/07/2017 - 20/08/2018)** ((((CAPPRM:AS1210 , CAPPRM:CE , CAPPRM:MHLW , CAPPRM:MOM) + MOVOL:400V , CAPPRM:CE + MOVOL:500V , CAPPRM:MHLW + MOVOL:200V) + FREQ:50HZ , (CAPPRM:ASME , CAPPRM:MHLW) + FREQ:60HZ + MOVOL:460V) + CAPPRE:IEC , (MOVOL:230V , MOVOL:460V , MOVOL:575V) + CAPPRE:ULCUL + CAPPRM:ASME + FREQ:60HZ) + COOL:AIR **(21/08/2018 - 11/12/2018)** ((((CAPPRM:AS1210 , CAPPRM:CE , CAPPRM:MHLW , CAPPRM:MOM) + MOVOL:400V , (CAPPRM:CE + MOVOL:500V , CAPPRM:MHLW + MOVOL:200V) + COOL:AIR) + FREQ:50HZ , (CAPPRM:ASME , CAPPRM:MHLW) + FREQ:60HZ + MOVOL:460V) + CAPPRE:IEC , ((MOVOL:230V , MOVOL:575V) + COOL:AIR , MOVOL:460V) + CAPPRE:ULCUL + CAPPRM:ASME + FREQ:60HZ)	X3
	1089 9572 06	1	LINE FILTER	**(20/07/2017 - 20/08/2018)** ((((CAPPRM:AS1210 , CAPPRM:CE , CAPPRM:MHLW , CAPPRM:MOM) + MOVOL:400V , CAPPRM:CE + MOVOL:500V , CAPPRM:MHLW + MOVOL:200V) + FREQ:50HZ , (CAPPRM:ASME , CAPPRM:MHLW) + FREQ:60HZ + MOVOL:460V) + CAPPRE:IEC , (MOVOL:230V , MOVOL:460V , MOVOL:575V) + CAPPRE:ULCUL + CAPPRM:ASME + FREQ:60HZ) + COOL:AIR **(21/08/2018 - 11/12/2018)** ((((CAPPRM:AS1210 , CAPPRM:CE , CAPPRM:MHLW , CAPPRM:MOM) + MOVOL:400V , (CAPPRM:CE + MOVOL:500V , CAPPRM:MHLW + MOVOL:200V) + COOL:AIR) + FREQ:50HZ , (CAPPRM:ASME , CAPPRM:MHLW) + FREQ:60HZ + MOVOL:460V) + CAPPRE:IEC , ((MOVOL:230V , MOVOL:575V) + COOL:AIR , MOVOL:460V) + CAPPRE:ULCUL + CAPPRM:ASME + FREQ:60HZ)	Z1 for 90kw
	1089 9562 04	1	STRAP	**(20/07/2017 - 20/08/2018)** ((((CAPPRM:AS1210 , CAPPRM:CE , CAPPRM:MHLW , CAPPRM:MOM) + MOVOL:400V , CAPPRM:CE + MOVOL:500V , CAPPRM:MHLW + MOVOL:200V) + FREQ:50HZ , (CAPPRM:ASME , CAPPRM:MHLW) + FREQ:60HZ + MOVOL:460V) + CAPPRE:IEC , (MOVOL:230V , MOVOL:460V , MOVOL:575V) + CAPPRE:ULCUL + CAPPRM:ASME + FREQ:60HZ) + COOL:AIR **(21/08/2018 - 11/12/2018)** ((((CAPPRM:AS1210 , CAPPRM:CE , CAPPRM:MHLW , CAPPRM:MOM) + MOVOL:400V , (CAPPRM:CE + MOVOL:500V , CAPPRM:MHLW + MOVOL:200V) + COOL:AIR) + FREQ:50HZ , (CAPPRM:ASME , CAPPRM:MHLW) + FREQ:60HZ + MOVOL:460V) + CAPPRE:IEC , ((MOVOL:230V , MOVOL:575V) + COOL:AIR , MOVOL:460V) + CAPPRE:ULCUL + CAPPRM:ASME + FREQ:60HZ)	HF-screen
	1089 9514 56	1	TRANSFORMER	**(20/07/2017 - 20/08/2018)** ((((CAPPRM:AS1210 , CAPPRM:CE , CAPPRM:MHLW , CAPPRM:MOM) + MOVOL:400V , CAPPRM:CE + MOVOL:500V , CAPPRM:MHLW + MOVOL:200V) + FREQ:50HZ , (CAPPRM:ASME , CAPPRM:MHLW) + FREQ:60HZ + MOVOL:460V) + CAPPRE:IEC , (MOVOL:230V , MOVOL:460V , MOVOL:575V) + CAPPRE:ULCUL + CAPPRM:ASME + FREQ:60HZ) + COOL:AIR **(21/08/2018 - 11/12/2018)** ((((CAPPRM:AS1210 , CAPPRM:CE , CAPPRM:MHLW , CAPPRM:MOM) + MOVOL:400V , (CAPPRM:CE + MOVOL:500V , CAPPRM:MHLW + MOVOL:200V) + COOL:AIR) + FREQ:50HZ , (CAPPRM:ASME , CAPPRM:MHLW) + FREQ:60HZ + MOVOL:460V) + CAPPRE:IEC , ((MOVOL:230V , MOVOL:575V) + COOL:AIR , MOVOL:460V) + CAPPRE:ULCUL + CAPPRM:ASME + FREQ:60HZ)	T1

Legend:

CAPPRE:IEC - Component approval electrical:IEC
CAPPRE:ULCUL - Component approval electrical:UL/cUL
CAPPRM:AS1210 - Component approval mechanical:AS1210
CAPPRM:ASME - Component approval mechanical:ASME
CAPPRM:CE - Component approval mechanical:CE
CAPPRM:MHLW - Component approval mechanical:MHLW
CAPPRM:MOM - Component approval mechanical:MOM
COOL:AIR - Cooling:Air cooled
FREQ:50HZ - Frequency:50 Hz
FREQ:60HZ - Frequency:60 Hz
IDRY:Y - Integrated dryer:Yes
MODEL:GA90VP_16 - Model:GA 90VSD+
MOVOL:200V - Supply voltage:200 V
MOVOL:230V - Supply voltage:230 V
MOVOL:400V - Supply voltage:400 V
MOVOL:460V - Supply voltage:460 V
MOVOL:500V - Supply voltage:500 V
MOVOL:575V - Supply voltage:575 V

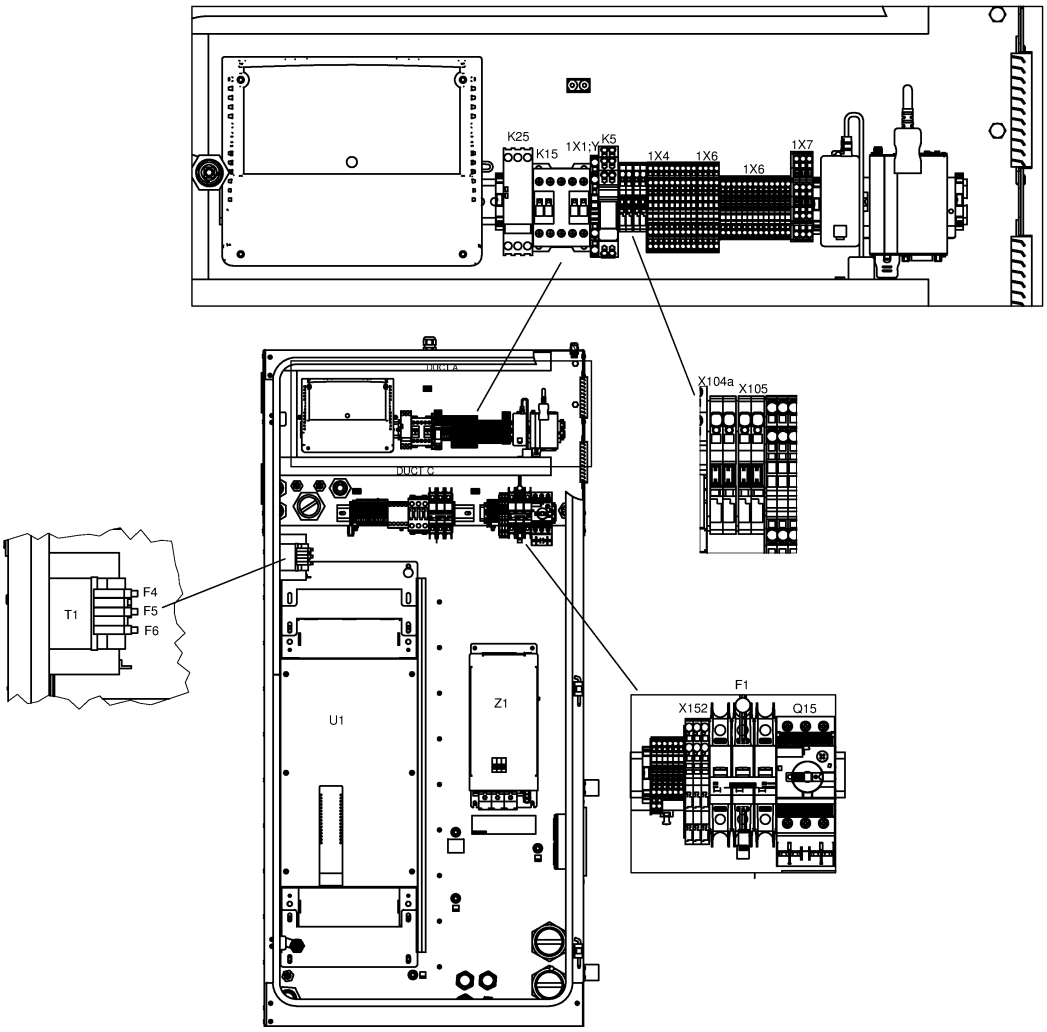
K25
K15
1X1:Y
K5
1X4
1X6
1X6
1X7
DUCT A
DUCT C
X104a
X105
T1
F4
F5
F6
U1
Z1
F1
X152
Q15

21.17 - Cubicle components GA 90 VSD+ - (200V-400V-500V/50Hz, 460V/60Hz - IEC, 230V-460V-575V/60Hz - UL-cUL) - Full-Feature (20/07/2017 - 11/12/2018)

(((MOVOL:200V , MOVOL:400V , MOVOL:500V) + FREQ:50HZ , FREQ:60HZ + MOVOL:460V) + CAPPRE:IEC , (MOVOL:230V , MOVOL:460V , MOVOL:575V) + CAPPRE:ULCUL + FREQ:60HZ) + IDRY:Y + MODEL:GA90VP_16

Ref	Part Number	Qty	Name	Validity	EL
	1089 9522 26	1	CIRCUIT BREAKER	**(20/07/2017 - 20/08/2018)** ((((CAPPRM:AS1210 , CAPPRM:CE , CAPPRM:MHLW , CAPPRM:MOM) + MOVOL:400V , CAPPRM:CE + MOVOL:500V , CAPPRM:MHLW + MOVOL:200V) + FREQ:50HZ , (CAPPRM:ASME , CAPPRM:MHLW) + FREQ:60HZ + MOVOL:460V) + CAPPRE:IEC , (MOVOL:230V , MOVOL:460V , MOVOL:575V) + CAPPRE:ULCUL + CAPPRM:ASME + FREQ:60HZ) + COOL:AIR **(21/08/2018 - 11/12/2018)** ((((CAPPRM:AS1210 , CAPPRM:CE , CAPPRM:MHLW , CAPPRM:MOM) + MOVOL:400V , (CAPPRM:CE + MOVOL:500V , CAPPRM:MHLW + MOVOL:200V) + COOL:AIR) + FREQ:50HZ , (CAPPRM:ASME , CAPPRM:MHLW) + FREQ:60HZ + MOVOL:460V) + CAPPRE:IEC , ((MOVOL:230V , MOVOL:575V) + COOL:AIR , MOVOL:460V) + CAPPRE:ULCUL + CAPPRM:ASME + FREQ:60HZ)	F1
	1089 9513 41	1	PUSH BUTTON	**(20/07/2017 - 20/08/2018)** ((((CAPPRM:AS1210 , CAPPRM:CE , CAPPRM:MHLW , CAPPRM:MOM) + MOVOL:400V , CAPPRM:CE + MOVOL:500V , CAPPRM:MHLW + MOVOL:200V) + FREQ:50HZ , (CAPPRM:ASME , CAPPRM:MHLW) + FREQ:60HZ + MOVOL:460V) + CAPPRE:IEC , (MOVOL:230V , MOVOL:460V , MOVOL:575V) + CAPPRE:ULCUL + CAPPRM:ASME + FREQ:60HZ) + COOL:AIR **(21/08/2018 - 11/12/2018)** ((((CAPPRM:AS1210 , CAPPRM:CE , CAPPRM:MHLW , CAPPRM:MOM) + MOVOL:400V , (CAPPRM:CE + MOVOL:500V , CAPPRM:MHLW + MOVOL:200V) + COOL:AIR) + FREQ:50HZ , (CAPPRM:ASME , CAPPRM:MHLW) + FREQ:60HZ + MOVOL:460V) + CAPPRE:IEC , ((MOVOL:230V , MOVOL:575V) + COOL:AIR , MOVOL:460V) + CAPPRE:ULCUL + CAPPRM:ASME + FREQ:60HZ)	S3
	1089 9513 28	1	HOLDER	**(20/07/2017 - 20/08/2018)** ((((CAPPRM:AS1210 , CAPPRM:CE , CAPPRM:MHLW , CAPPRM:MOM) + MOVOL:400V , CAPPRM:CE + MOVOL:500V , CAPPRM:MHLW + MOVOL:200V) + FREQ:50HZ , (CAPPRM:ASME , CAPPRM:MHLW) + FREQ:60HZ + MOVOL:460V) + CAPPRE:IEC , (MOVOL:230V , MOVOL:460V , MOVOL:575V) + CAPPRE:ULCUL + CAPPRM:ASME + FREQ:60HZ) + COOL:AIR **(21/08/2018 - 11/12/2018)** ((((CAPPRM:AS1210 , CAPPRM:CE , CAPPRM:MHLW , CAPPRM:MOM) + MOVOL:400V , (CAPPRM:CE + MOVOL:500V , CAPPRM:MHLW + MOVOL:200V) + COOL:AIR) + FREQ:50HZ , (CAPPRM:ASME , CAPPRM:MHLW) + FREQ:60HZ + MOVOL:460V) + CAPPRE:IEC , ((MOVOL:230V , MOVOL:575V) + COOL:AIR , MOVOL:460V) + CAPPRE:ULCUL + CAPPRM:ASME + FREQ:60HZ)	S3
	~~1089 9513 30~~	4	CONTACTOR	**(20/07/2017 - 20/08/2018)** ((((CAPPRM:AS1210 , CAPPRM:CE , CAPPRM:MHLW , CAPPRM:MOM) + MOVOL:400V , CAPPRM:CE + MOVOL:500V , CAPPRM:MHLW + MOVOL:200V) + FREQ:50HZ , (CAPPRM:ASME , CAPPRM:MHLW) + FREQ:60HZ + MOVOL:460V) + CAPPRE:IEC , (MOVOL:230V , MOVOL:460V , MOVOL:575V) + CAPPRE:ULCUL + CAPPRM:ASME + FREQ:60HZ) + COOL:AIR **(21/08/2018 - 11/12/2018)** ((((CAPPRM:AS1210 , CAPPRM:CE , CAPPRM:MHLW , CAPPRM:MOM) + MOVOL:400V , (CAPPRM:CE + MOVOL:500V , CAPPRM:MHLW + MOVOL:200V) + COOL:AIR) + FREQ:50HZ , (CAPPRM:ASME , CAPPRM:MHLW) + FREQ:60HZ + MOVOL:460V) + CAPPRE:IEC , ((MOVOL:230V , MOVOL:575V) + COOL:AIR , MOVOL:460V) + CAPPRE:ULCUL + CAPPRM:ASME + FREQ:60HZ)	S3

Legend:

CAPPRE:IEC - Component approval electrical:IEC
CAPPRE:ULCUL - Component approval electrical:UL/cUL
CAPPRM:AS1210 - Component approval mechanical:AS1210
CAPPRM:ASME - Component approval mechanical:ASME
CAPPRM:CE - Component approval mechanical:CE
CAPPRM:MHLW - Component approval mechanical:MHLW
CAPPRM:MOM - Component approval mechanical:MOM
COOL:AIR - Cooling:Air cooled
FREQ:50HZ - Frequency:50 Hz
FREQ:60HZ - Frequency:60 Hz
IDRY:Y - Integrated dryer:Yes
MODEL:GA90VP_16 - Model:GA 90VSD+
MOVOL:200V - Supply voltage:200 V
MOVOL:230V - Supply voltage:230 V
MOVOL:400V - Supply voltage:400 V
MOVOL:460V - Supply voltage:460 V
MOVOL:500V - Supply voltage:500 V
MOVOL:575V - Supply voltage:575 V

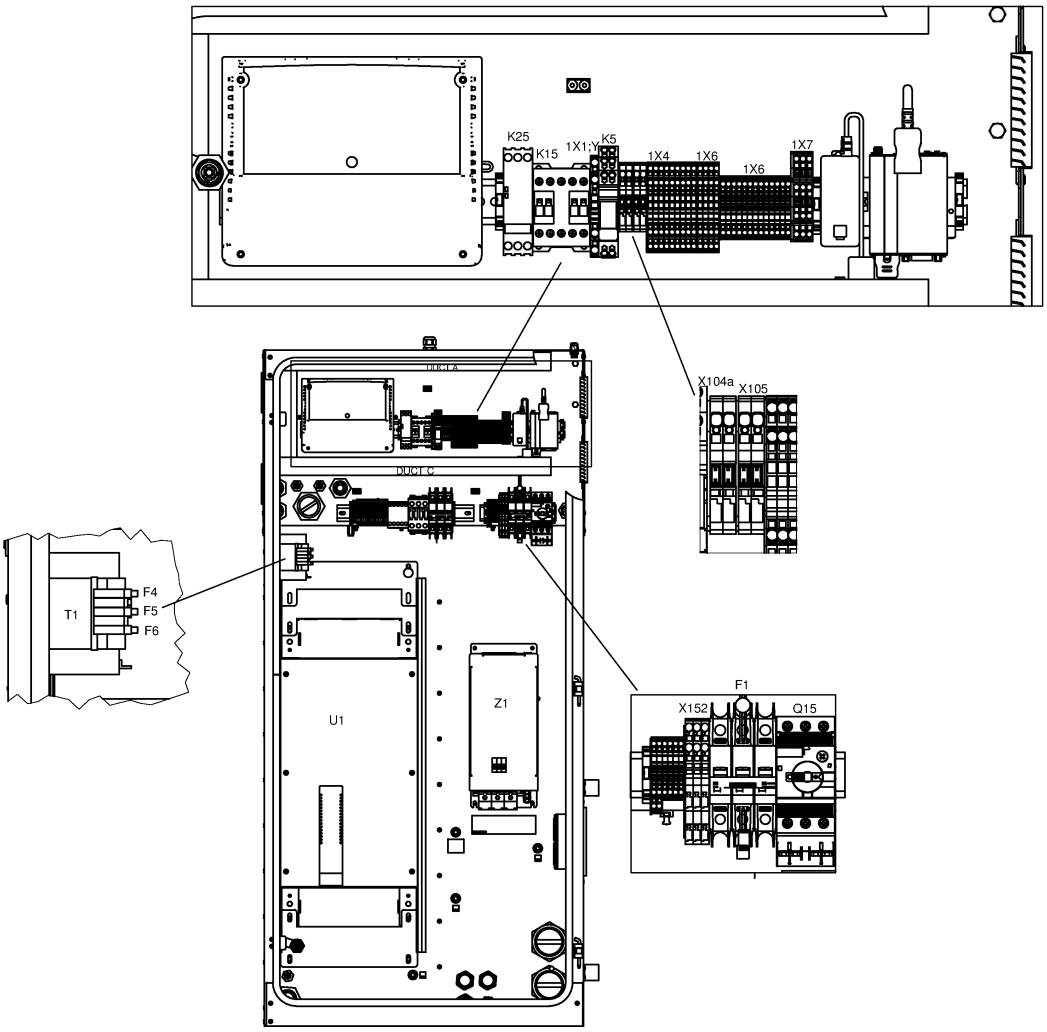
K25
K15
1X1:Y
K5
1X4
1X6
1X6
1X7
DUCT A
DUCT C
X104a
X105
T1
F4
F5
F6
U1
Z1
F1
X152
Q15

Ref	Part Number	Qty	Name	Validity	EL
	Substituted by:	1089 9513 04 - CONTACT BLOCK (quantity: 1)			
	1088 0031 02	1	CONNECTOR 2-POLE	**(20/07/2017 - 20/08/2018)** ((((CAPPRM:AS1210 , CAPPRM:CE , CAPPRM:MHLW , CAPPRM:MOM) + MOVOL:400V , CAPPRM:CE + MOVOL:500V , CAPPRM:MHLW + MOVOL:200V) + FREQ:50HZ , (CAPPRM:ASME , CAPPRM:MHLW) + FREQ:60HZ + MOVOL:460V) + CAPPRE:IEC , (MOVOL:230V , MOVOL:460V , MOVOL:575V) + CAPPRE:ULCUL + CAPPRM:ASME + FREQ:60HZ) + COOL:AIR **(21/08/2018 - 11/12/2018)** ((((CAPPRM:AS1210 , CAPPRM:CE , CAPPRM:MHLW , CAPPRM:MOM) + MOVOL:400V , (CAPPRM:CE + MOVOL:500V , CAPPRM:MHLW + MOVOL:200V) + COOL:AIR) + FREQ:50HZ , (CAPPRM:ASME , CAPPRM:MHLW) + FREQ:60HZ + MOVOL:460V) + CAPPRE:IEC , ((MOVOL:230V , MOVOL:575V) + COOL:AIR , MOVOL:460V) + CAPPRE:ULCUL + CAPPRM:ASME + FREQ:60HZ)	
	Electrical legend:	X153 (Smartbox)			
	1088 0039 07	3	TERMINAL	**(20/07/2017 - 20/08/2018)** ((((CAPPRM:AS1210 , CAPPRM:CE , CAPPRM:MHLW , CAPPRM:MOM) + MOVOL:400V , CAPPRM:CE + MOVOL:500V , CAPPRM:MHLW + MOVOL:200V) + FREQ:50HZ , (CAPPRM:ASME , CAPPRM:MHLW) + FREQ:60HZ + MOVOL:460V) + CAPPRE:IEC , (MOVOL:230V , MOVOL:460V , MOVOL:575V) + CAPPRE:ULCUL + CAPPRM:ASME + FREQ:60HZ) + COOL:AIR **(21/08/2018 - 11/12/2018)** ((((CAPPRM:AS1210 , CAPPRM:CE , CAPPRM:MHLW , CAPPRM:MOM) + MOVOL:400V , (CAPPRM:CE + MOVOL:500V , CAPPRM:MHLW + MOVOL:200V) + COOL:AIR) + FREQ:50HZ , (CAPPRM:ASME , CAPPRM:MHLW) + FREQ:60HZ + MOVOL:460V) + CAPPRE:IEC , ((MOVOL:230V , MOVOL:575V) + COOL:AIR , MOVOL:460V) + CAPPRE:ULCUL + CAPPRM:ASME + FREQ:60HZ)	X152
	1088 0039 05	1	PLATE	**(20/07/2017 - 20/08/2018)** ((((CAPPRM:AS1210 , CAPPRM:CE , CAPPRM:MHLW , CAPPRM:MOM) + MOVOL:400V , CAPPRM:CE + MOVOL:500V , CAPPRM:MHLW + MOVOL:200V) + FREQ:50HZ , (CAPPRM:ASME , CAPPRM:MHLW) + FREQ:60HZ + MOVOL:460V) + CAPPRE:IEC , (MOVOL:230V , MOVOL:460V , MOVOL:575V) + CAPPRE:ULCUL + CAPPRM:ASME + FREQ:60HZ) + COOL:AIR **(21/08/2018 - 11/12/2018)** ((((CAPPRM:AS1210 , CAPPRM:CE , CAPPRM:MHLW , CAPPRM:MOM) + MOVOL:400V , (CAPPRM:CE + MOVOL:500V , CAPPRM:MHLW + MOVOL:200V) + COOL:AIR) + FREQ:50HZ , (CAPPRM:ASME , CAPPRM:MHLW) + FREQ:60HZ + MOVOL:460V) + CAPPRE:IEC , ((MOVOL:230V , MOVOL:575V) + COOL:AIR , MOVOL:460V) + CAPPRE:ULCUL + CAPPRM:ASME + FREQ:60HZ)	X152

Legend:

CAPPRE:IEC - Component approval electrical:IEC	CAPPRE:ULCUL - Component approval electrical:UL/cUL	CAPPRM:AS1210 - Component approval mechanical:AS1210
CAPPRM:ASME - Component approval mechanical:ASME	CAPPRM:CE - Component approval mechanical:CE	CAPPRM:MHLW - Component approval mechanical:MHLW
CAPPRM:MOM - Component approval mechanical:MOM	COOL:AIR - Cooling:Air cooled	FREQ:50HZ - Frequency:50 Hz
FREQ:60HZ - Frequency:60 Hz	IDRY:Y - Integrated dryer:Yes	MODEL:GA90VP_16 - Model:GA 90VSD+
MOVOL:200V - Supply voltage:200 V	MOVOL:230V - Supply voltage:230 V	MOVOL:400V - Supply voltage:400 V
MOVOL:460V - Supply voltage:460 V	MOVOL:500V - Supply voltage:500 V	MOVOL:575V - Supply voltage:575 V

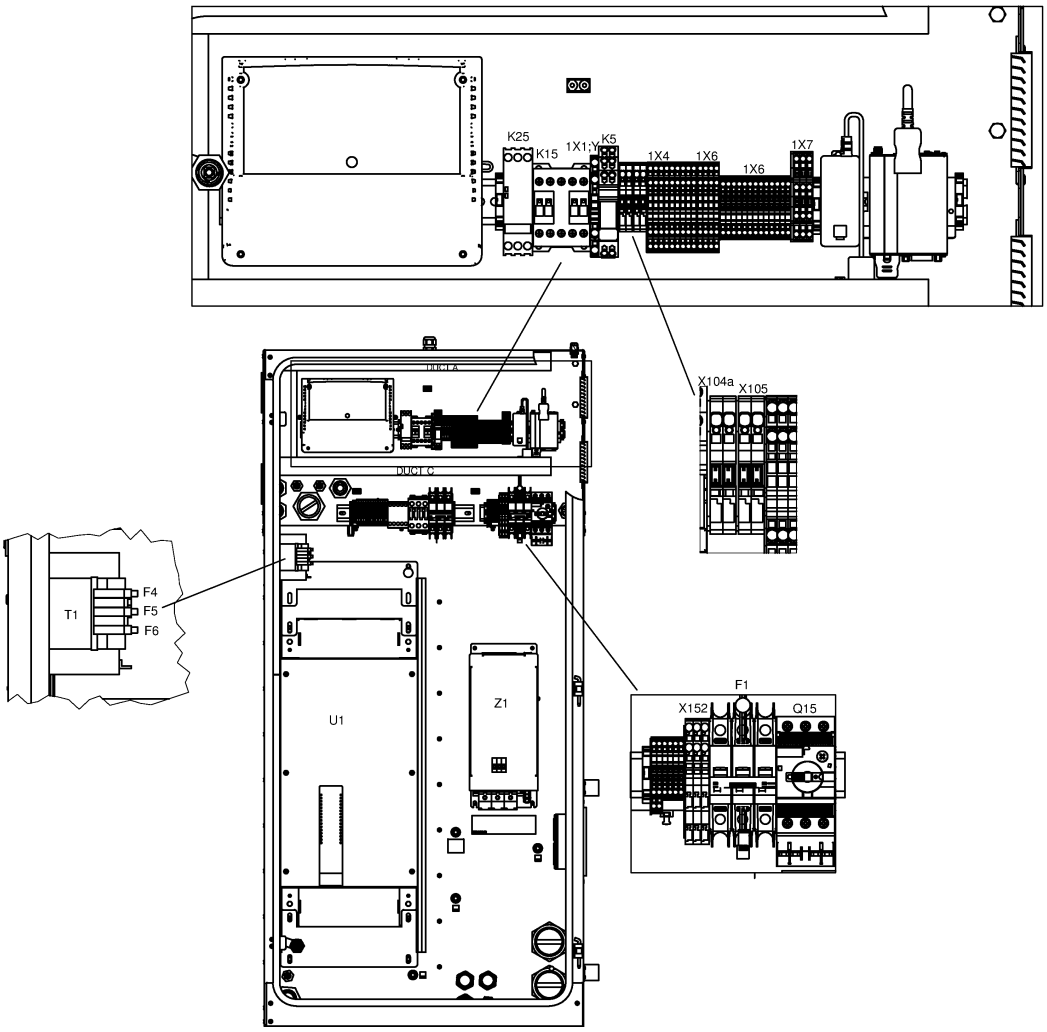
K25
K15
1X1:Y
K5
1X4
1X6
1X6
1X7
DUCT A
DUCT C
X104a
X105
T1
F4
F5
F6
U1
Z1
F1
X152
Q15

21.17 - Cubicle components GA 90 VSD+ - (200V-400V-500V/50Hz, 460V/60Hz - IEC, 230V-460V-575V/60Hz - UL-cUL) - Full-Feature (20/07/2017 - 11/12/2018)

(((MOVOL:200V , MOVOL:400V , MOVOL:500V) + FREQ:50HZ , FREQ:60HZ + MOVOL:460V) + CAPPRE:IEC , (MOVOL:230V , MOVOL:460V , MOVOL:575V) + CAPPRE:ULCUL + FREQ:60HZ) + IDRY:Y + MODEL:GA90VP_16

Ref	Part Number	Qty	Name	Validity	EL
	1088 0039 26	1	CONNECTOR	**(20/07/2017 - 20/08/2018)** ((((CAPPRM:AS1210 , CAPPRM:CE , CAPPRM:MHLW , CAPPRM:MOM) + MOVOL:400V , CAPPRM:CE + MOVOL:500V , CAPPRM:MHLW + MOVOL:200V) + FREQ:50HZ , (CAPPRM:ASME , CAPPRM:MHLW) + FREQ:60HZ + MOVOL:460V) + CAPPRE:IEC , (MOVOL:230V , MOVOL:460V , MOVOL:575V) + CAPPRE:ULCUL + CAPPRM:ASME + FREQ:60HZ) + COOL:AIR **(21/08/2018 - 11/12/2018)** ((((CAPPRM:AS1210 , CAPPRM:CE , CAPPRM:MHLW , CAPPRM:MOM) + MOVOL:400V , (CAPPRM:CE + MOVOL:500V , CAPPRM:MHLW + MOVOL:200V) + COOL:AIR) + FREQ:50HZ , (CAPPRM:ASME , CAPPRM:MHLW) + FREQ:60HZ + MOVOL:460V) + CAPPRE:IEC , ((MOVOL:230V , MOVOL:575V) + COOL:AIR , MOVOL:460V) + CAPPRE:ULCUL + CAPPRM:ASME + FREQ:60HZ)	
	Electrical legend:	X152 (remove coding pin 1,3)			
	1088 0037 99	4	PIN	**(20/07/2017 - 20/08/2018)** ((((CAPPRM:AS1210 , CAPPRM:CE , CAPPRM:MHLW , CAPPRM:MOM) + MOVOL:400V , CAPPRM:CE + MOVOL:500V , CAPPRM:MHLW + MOVOL:200V) + FREQ:50HZ , (CAPPRM:ASME , CAPPRM:MHLW) + FREQ:60HZ + MOVOL:460V) + CAPPRE:IEC , (MOVOL:230V , MOVOL:460V , MOVOL:575V) + CAPPRE:ULCUL + CAPPRM:ASME + FREQ:60HZ) + COOL:AIR **(21/08/2018 - 11/12/2018)** ((((CAPPRM:AS1210 , CAPPRM:CE , CAPPRM:MHLW , CAPPRM:MOM) + MOVOL:400V , (CAPPRM:CE + MOVOL:500V , CAPPRM:MHLW + MOVOL:200V) + COOL:AIR) + FREQ:50HZ , (CAPPRM:ASME , CAPPRM:MHLW) + FREQ:60HZ + MOVOL:460V) + CAPPRE:IEC , ((MOVOL:230V , MOVOL:575V) + COOL:AIR , MOVOL:460V) + CAPPRE:ULCUL + CAPPRM:ASME + FREQ:60HZ)	X152:1; 3
	~~1088 0031 81~~	7	END STOP BRACKET 6MM	**(20/07/2017 - 20/08/2018)** ((((CAPPRM:AS1210 , CAPPRM:CE , CAPPRM:MHLW , CAPPRM:MOM) + MOVOL:400V , CAPPRM:CE + MOVOL:500V , CAPPRM:MHLW + MOVOL:200V) + FREQ:50HZ , (CAPPRM:ASME , CAPPRM:MHLW) + FREQ:60HZ + MOVOL:460V) + CAPPRE:IEC , (MOVOL:230V , MOVOL:460V , MOVOL:575V) + CAPPRE:ULCUL + CAPPRM:ASME + FREQ:60HZ) + COOL:AIR **(21/08/2018 - 11/12/2018)** ((((CAPPRM:AS1210 , CAPPRM:CE , CAPPRM:MHLW , CAPPRM:MOM) + MOVOL:400V , (CAPPRM:CE + MOVOL:500V , CAPPRM:MHLW + MOVOL:200V) + COOL:AIR) + FREQ:50HZ , (CAPPRM:ASME , CAPPRM:MHLW) + FREQ:60HZ + MOVOL:460V) + CAPPRE:IEC , ((MOVOL:230V , MOVOL:575V) + COOL:AIR , MOVOL:460V) + CAPPRE:ULCUL + CAPPRM:ASME + FREQ:60HZ)	
	Electrical legend:	Connector/terminal rail			
	Substituted by:	1089 0577 82 - END RETAINER (quantity: 1)			

Legend:

CAPPRE:IEC - Component approval electrical:IEC	CAPPRE:ULCUL - Component approval electrical:UL/cUL	CAPPRM:AS1210 - Component approval mechanical:AS1210
CAPPRM:ASME - Component approval mechanical:ASME	CAPPRM:CE - Component approval mechanical:CE	CAPPRM:MHLW - Component approval mechanical:MHLW
CAPPRM:MOM - Component approval mechanical:MOM	COOL:AIR - Cooling:Air cooled	FREQ:50HZ - Frequency:50 Hz
FREQ:60HZ - Frequency:60 Hz	IDRY:Y - Integrated dryer:Yes	MODEL:GA90VP_16 - Model:GA 90VSD+
MOVOL:200V - Supply voltage:200 V	MOVOL:230V - Supply voltage:230 V	MOVOL:400V - Supply voltage:400 V
MOVOL:460V - Supply voltage:460 V	MOVOL:500V - Supply voltage:500 V	MOVOL:575V - Supply voltage:575 V

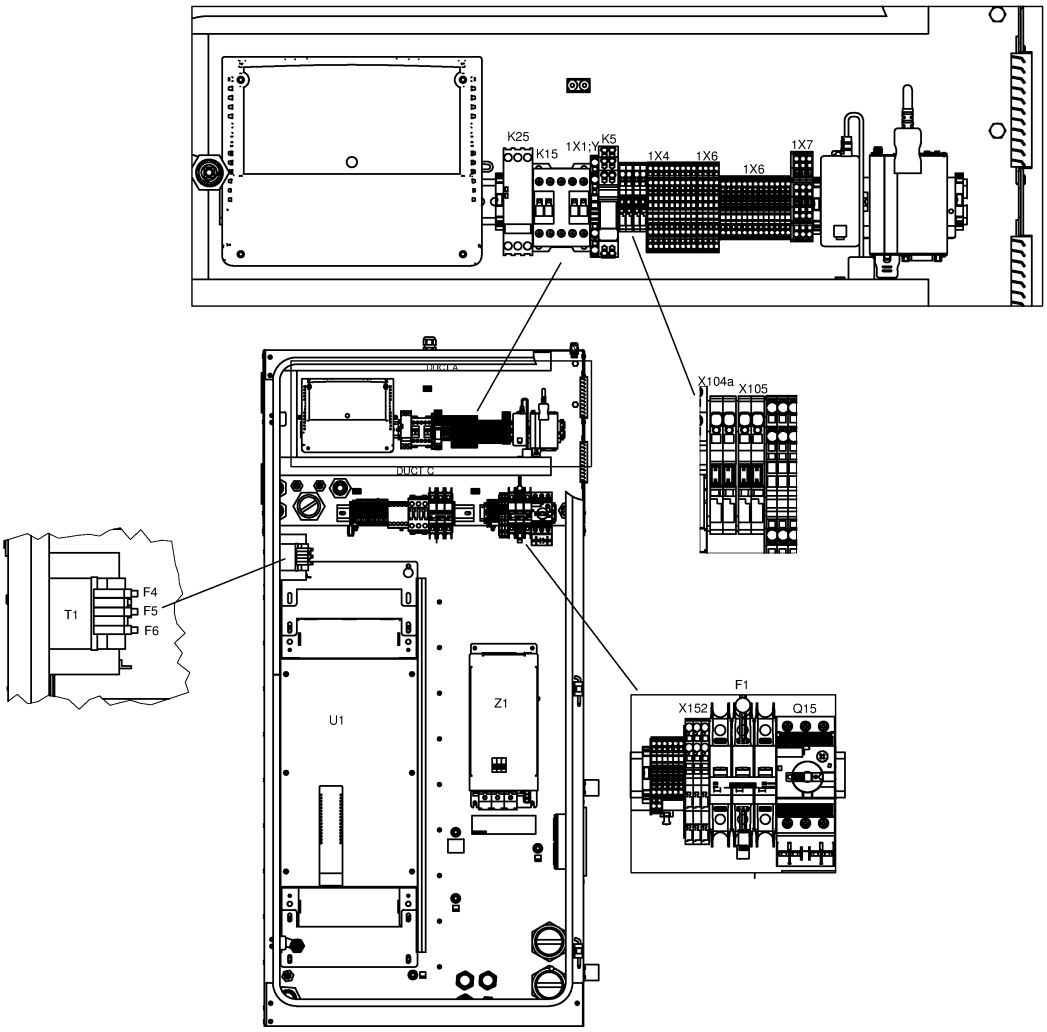
K25
K15
1X1:Y
K5
1X4
1X6
1X6
1X7
DUCT A
DUCT C
X104a
X105
T1
F4
F5
F6
U1
Z1
F1
X152
Q15

21.17 - Cubicle components GA 90 VSD+ - (200V-400V-500V/50Hz, 460V/60Hz - IEC, 230V-460V-575V/60Hz - UL-cUL) - Full-Feature (20/07/2017 - 11/12/2018)

(((MOVOL:200V , MOVOL:400V , MOVOL:500V) + FREQ:50HZ , FREQ:60HZ + MOVOL:460V) + CAPPRE:IEC , (MOVOL:230V , MOVOL:460V , MOVOL:575V) + CAPPRE:ULCUL + FREQ:60HZ) + IDRY:Y + MODEL:GA90VP_16

Ref	Part Number	Qty	Name	Validity	EL
	1088 0039 38	2	TERMINAL	**(20/07/2017 - 20/08/2018)** ((((CAPPRM:AS1210 , CAPPRM:CE , CAPPRM:MHLW , CAPPRM:MOM) + MOVOL:400V , CAPPRM:CE + MOVOL:500V , CAPPRM:MHLW + MOVOL:200V) + FREQ:50HZ , (CAPPRM:ASME , CAPPRM:MHLW) + FREQ:60HZ + MOVOL:460V) + CAPPRE:IEC , (MOVOL:230V , MOVOL:460V , MOVOL:575V) + CAPPRE:ULCUL + CAPPRM:ASME + FREQ:60HZ) + COOL:AIR **(21/08/2018 - 11/12/2018)** ((((CAPPRM:AS1210 , CAPPRM:CE , CAPPRM:MHLW , CAPPRM:MOM) + MOVOL:400V , (CAPPRM:CE + MOVOL:500V , CAPPRM:MHLW + MOVOL:200V) + COOL:AIR) + FREQ:50HZ , (CAPPRM:ASME , CAPPRM:MHLW) + FREQ:60HZ + MOVOL:460V) + CAPPRE:IEC , ((MOVOL:230V , MOVOL:575V) + COOL:AIR , MOVOL:460V) + CAPPRE:ULCUL + CAPPRM:ASME + FREQ:60HZ)	1X11:2,5
	1088 0039 40	1	PLATE	**(20/07/2017 - 20/08/2018)** ((((CAPPRM:AS1210 , CAPPRM:CE , CAPPRM:MHLW , CAPPRM:MOM) + MOVOL:400V , CAPPRM:CE + MOVOL:500V , CAPPRM:MHLW + MOVOL:200V) + FREQ:50HZ , (CAPPRM:ASME , CAPPRM:MHLW) + FREQ:60HZ + MOVOL:460V) + CAPPRE:IEC , (MOVOL:230V , MOVOL:460V , MOVOL:575V) + CAPPRE:ULCUL + CAPPRM:ASME + FREQ:60HZ) + COOL:AIR **(21/08/2018 - 11/12/2018)** ((((CAPPRM:AS1210 , CAPPRM:CE , CAPPRM:MHLW , CAPPRM:MOM) + MOVOL:400V , (CAPPRM:CE + MOVOL:500V , CAPPRM:MHLW + MOVOL:200V) + COOL:AIR) + FREQ:50HZ , (CAPPRM:ASME , CAPPRM:MHLW) + FREQ:60HZ + MOVOL:460V) + CAPPRE:IEC , ((MOVOL:230V , MOVOL:575V) + COOL:AIR , MOVOL:460V) + CAPPRE:ULCUL + CAPPRM:ASME + FREQ:60HZ)	1X11
	1088 0039 34	4	TERMINAL	**(20/07/2017 - 20/08/2018)** ((((CAPPRM:AS1210 , CAPPRM:CE , CAPPRM:MHLW , CAPPRM:MOM) + MOVOL:400V , CAPPRM:CE + MOVOL:500V , CAPPRM:MHLW + MOVOL:200V) + FREQ:50HZ , (CAPPRM:ASME , CAPPRM:MHLW) + FREQ:60HZ + MOVOL:460V) + CAPPRE:IEC , (MOVOL:230V , MOVOL:460V , MOVOL:575V) + CAPPRE:ULCUL + CAPPRM:ASME + FREQ:60HZ) + COOL:AIR **(21/08/2018 - 11/12/2018)** ((((CAPPRM:AS1210 , CAPPRM:CE , CAPPRM:MHLW , CAPPRM:MOM) + MOVOL:400V , (CAPPRM:CE + MOVOL:500V , CAPPRM:MHLW + MOVOL:200V) + COOL:AIR) + FREQ:50HZ , (CAPPRM:ASME , CAPPRM:MHLW) + FREQ:60HZ + MOVOL:460V) + CAPPRE:IEC , ((MOVOL:230V , MOVOL:575V) + COOL:AIR , MOVOL:460V) + CAPPRE:ULCUL + CAPPRM:ASME + FREQ:60HZ)	
	Electrical legend:	1X11:30,301,34			

Legend:

CAPPRE:IEC - Component approval electrical:IEC
CAPPRE:ULCUL - Component approval electrical:UL/cUL
CAPPRM:AS1210 - Component approval mechanical:AS1210
CAPPRM:ASME - Component approval mechanical:ASME
CAPPRM:CE - Component approval mechanical:CE
CAPPRM:MHLW - Component approval mechanical:MHLW
CAPPRM:MOM - Component approval mechanical:MOM
COOL:AIR - Cooling:Air cooled
FREQ:50HZ - Frequency:50 Hz
FREQ:60HZ - Frequency:60 Hz
IDRY:Y - Integrated dryer:Yes
MODEL:GA90VP_16 - Model:GA 90VSD+
MOVOL:200V - Supply voltage:200 V
MOVOL:230V - Supply voltage:230 V
MOVOL:400V - Supply voltage:400 V
MOVOL:460V - Supply voltage:460 V
MOVOL:500V - Supply voltage:500 V
MOVOL:575V - Supply voltage:575 V

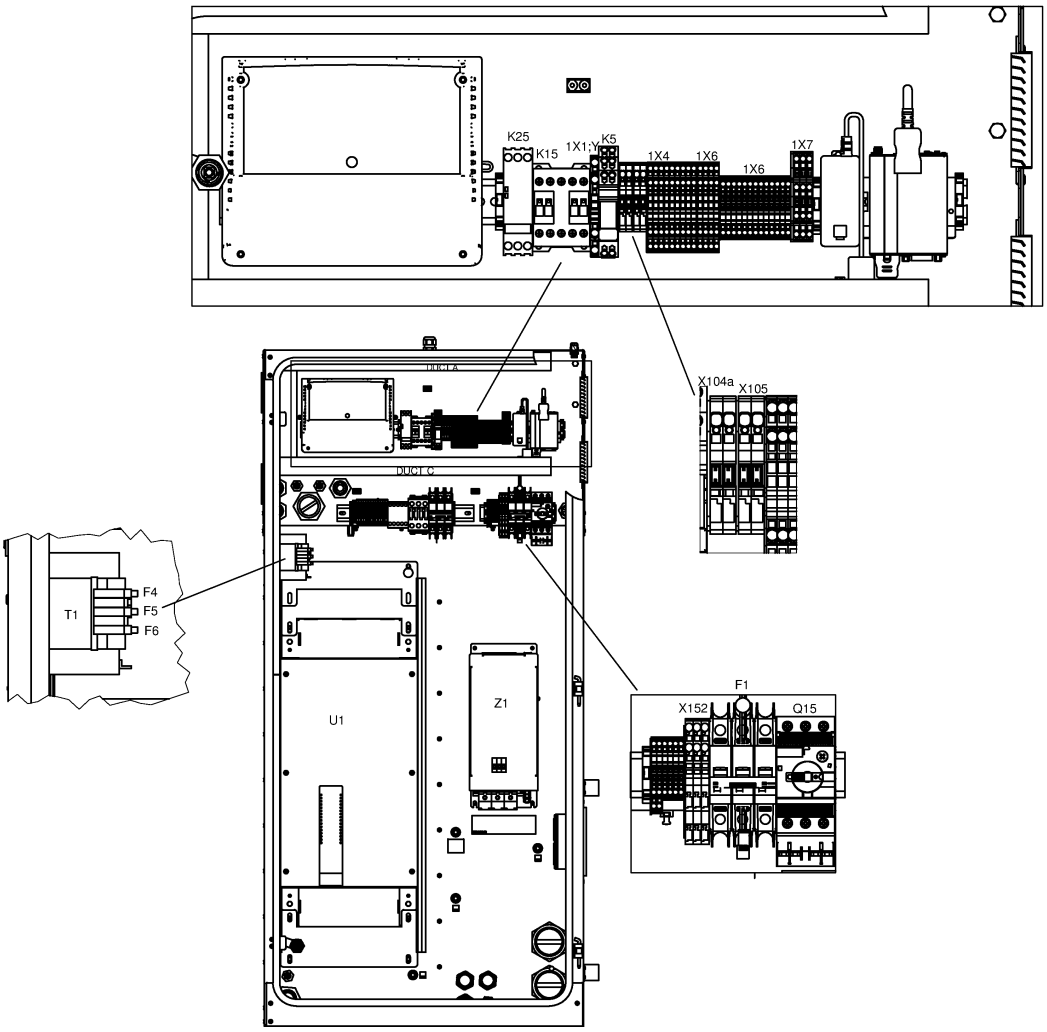
K25
K15
1X1:Y
K5
1X4
1X6
1X6
1X7
DUCT A
DUCT C
X104a
X105
T1
F4
F5
F6
U1
Z1
F1
X152
Q15

21.17 - Cubicle components GA 90 VSD+ - (200V-400V-500V/50Hz, 460V/60Hz - IEC, 230V-460V-575V/60Hz - UL-cUL) - Full-Feature (20/07/2017 - 11/12/2018)

(((MOVOL:200V , MOVOL:400V , MOVOL:500V) + FREQ:50HZ , FREQ:60HZ + MOVOL:460V) + CAPPRE:IEC , (MOVOL:230V , MOVOL:460V , MOVOL:575V) + CAPPRE:ULCUL + FREQ:60HZ) + IDRY:Y + MODEL:GA90VP_16

Ref	Part Number	Qty	Name	Validity	EL
	1088 0039 35	1	PLATE	**(20/07/2017 - 20/08/2018)** ((((CAPPRM:AS1210 , CAPPRM:CE , CAPPRM:MHLW , CAPPRM:MOM) + MOVOL:400V , CAPPRM:CE + MOVOL:500V , CAPPRM:MHLW + MOVOL:200V) + FREQ:50HZ , (CAPPRM:ASME , CAPPRM:MHLW) + FREQ:60HZ + MOVOL:460V) + CAPPRE:IEC , (MOVOL:230V , MOVOL:460V , MOVOL:575V) + CAPPRE:ULCUL + CAPPRM:ASME + FREQ:60HZ) + COOL:AIR **(21/08/2018 - 11/12/2018)** ((((CAPPRM:AS1210 , CAPPRM:CE , CAPPRM:MHLW , CAPPRM:MOM) + MOVOL:400V , (CAPPRM:CE + MOVOL:500V , CAPPRM:MHLW + MOVOL:200V) + COOL:AIR) + FREQ:50HZ , (CAPPRM:ASME , CAPPRM:MHLW) + FREQ:60HZ + MOVOL:460V) + CAPPRE:IEC , ((MOVOL:230V , MOVOL:575V) + COOL:AIR , MOVOL:460V) + CAPPRE:ULCUL + CAPPRM:ASME + FREQ:60HZ)	1X11
	1088 0039 04	2	TERMINAL	**(20/07/2017 - 20/08/2018)** ((((CAPPRM:AS1210 , CAPPRM:CE , CAPPRM:MHLW , CAPPRM:MOM) + MOVOL:400V , CAPPRM:CE + MOVOL:500V , CAPPRM:MHLW + MOVOL:200V) + FREQ:50HZ , (CAPPRM:ASME , CAPPRM:MHLW) + FREQ:60HZ + MOVOL:460V) + CAPPRE:IEC , (MOVOL:230V , MOVOL:460V , MOVOL:575V) + CAPPRE:ULCUL + CAPPRM:ASME + FREQ:60HZ) + COOL:AIR **(21/08/2018 - 11/12/2018)** ((((CAPPRM:AS1210 , CAPPRM:CE , CAPPRM:MHLW , CAPPRM:MOM) + MOVOL:400V , (CAPPRM:CE + MOVOL:500V , CAPPRM:MHLW + MOVOL:200V) + COOL:AIR) + FREQ:50HZ , (CAPPRM:ASME , CAPPRM:MHLW) + FREQ:60HZ + MOVOL:460V) + CAPPRE:IEC , ((MOVOL:230V , MOVOL:575V) + COOL:AIR , MOVOL:460V) + CAPPRE:ULCUL + CAPPRM:ASME + FREQ:60HZ)	X104a
	1088 0037 99	2	PIN	**(20/07/2017 - 20/08/2018)** ((((CAPPRM:AS1210 , CAPPRM:CE , CAPPRM:MHLW , CAPPRM:MOM) + MOVOL:400V , CAPPRM:CE + MOVOL:500V , CAPPRM:MHLW + MOVOL:200V) + FREQ:50HZ , (CAPPRM:ASME , CAPPRM:MHLW) + FREQ:60HZ + MOVOL:460V) + CAPPRE:IEC , (MOVOL:230V , MOVOL:460V , MOVOL:575V) + CAPPRE:ULCUL + CAPPRM:ASME + FREQ:60HZ) + COOL:AIR **(21/08/2018 - 11/12/2018)** ((((CAPPRM:AS1210 , CAPPRM:CE , CAPPRM:MHLW , CAPPRM:MOM) + MOVOL:400V , (CAPPRM:CE + MOVOL:500V , CAPPRM:MHLW + MOVOL:200V) + COOL:AIR) + FREQ:50HZ , (CAPPRM:ASME , CAPPRM:MHLW) + FREQ:60HZ + MOVOL:460V) + CAPPRE:IEC , ((MOVOL:230V , MOVOL:575V) + COOL:AIR , MOVOL:460V) + CAPPRE:ULCUL + CAPPRM:ASME + FREQ:60HZ)	X104a/X105
	1088 0039 02	1	PLATE	**(20/07/2017 - 20/08/2018)** ((((CAPPRM:AS1210 , CAPPRM:CE , CAPPRM:MHLW , CAPPRM:MOM) + MOVOL:400V , CAPPRM:CE + MOVOL:500V , CAPPRM:MHLW + MOVOL:200V) + FREQ:50HZ , (CAPPRM:ASME , CAPPRM:MHLW) + FREQ:60HZ + MOVOL:460V) + CAPPRE:IEC , (MOVOL:230V , MOVOL:460V , MOVOL:575V) + CAPPRE:ULCUL + CAPPRM:ASME + FREQ:60HZ) + COOL:AIR **(21/08/2018 - 11/12/2018)** ((((CAPPRM:AS1210 , CAPPRM:CE , CAPPRM:MHLW , CAPPRM:MOM) + MOVOL:400V , (CAPPRM:CE + MOVOL:500V , CAPPRM:MHLW + MOVOL:200V) + COOL:AIR) + FREQ:50HZ , (CAPPRM:ASME , CAPPRM:MHLW) + FREQ:60HZ + MOVOL:460V) + CAPPRE:IEC , ((MOVOL:230V , MOVOL:575V) + COOL:AIR , MOVOL:460V) + CAPPRE:ULCUL + CAPPRM:ASME + FREQ:60HZ)	X104a

Legend:

CAPPRE:IEC - Component approval electrical:IEC
CAPPRE:ULCUL - Component approval electrical:UL/cUL
CAPPRM:AS1210 - Component approval mechanical:AS1210
CAPPRM:ASME - Component approval mechanical:ASME
CAPPRM:CE - Component approval mechanical:CE
CAPPRM:MHLW - Component approval mechanical:MHLW
CAPPRM:MOM - Component approval mechanical:MOM
COOL:AIR - Cooling:Air cooled
FREQ:50HZ - Frequency:50 Hz
FREQ:60HZ - Frequency:60 Hz
IDRY:Y - Integrated dryer:Yes
MODEL:GA90VP_16 - Model:GA 90VSD+
MOVOL:200V - Supply voltage:200 V
MOVOL:230V - Supply voltage:230 V
MOVOL:400V - Supply voltage:400 V
MOVOL:460V - Supply voltage:460 V
MOVOL:500V - Supply voltage:500 V
MOVOL:575V - Supply voltage:575 V

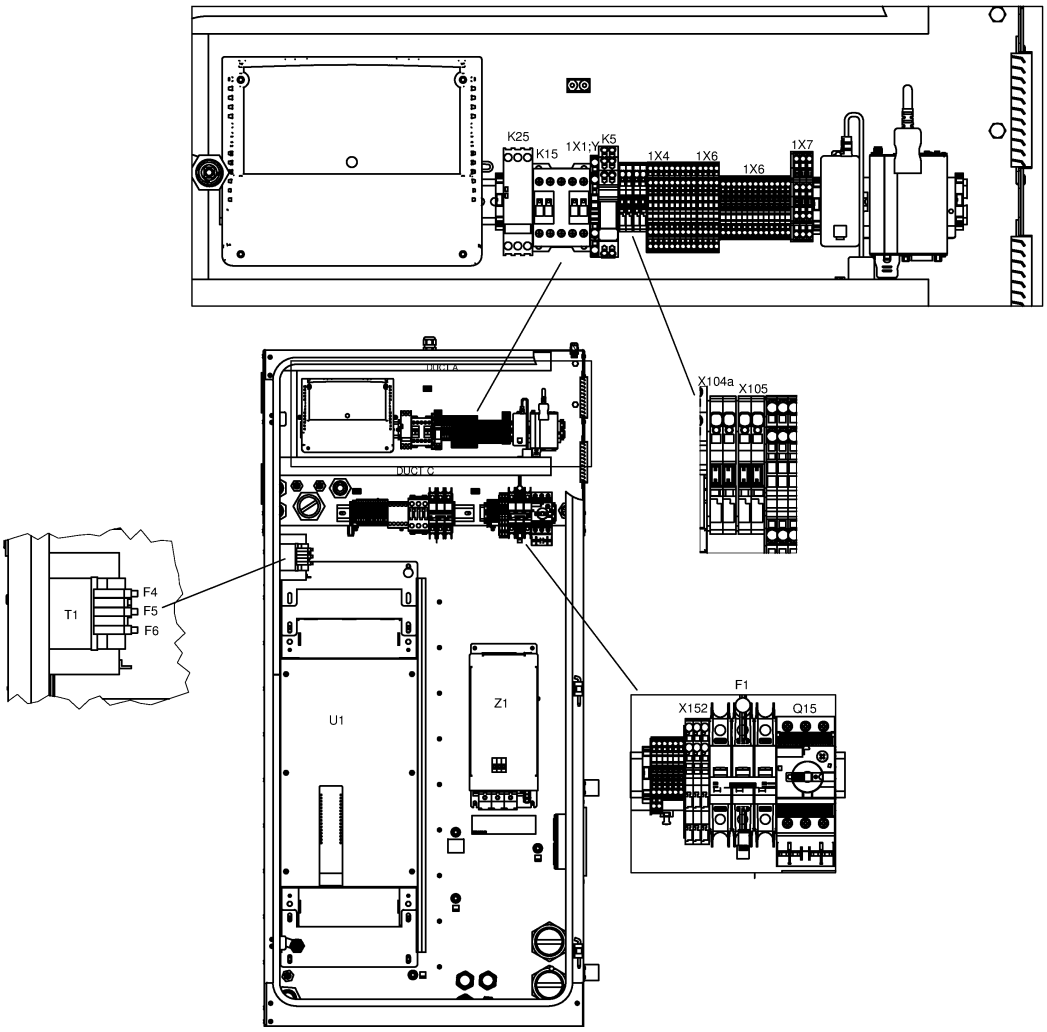
K25
K15
1X1:Y
K5
1X4
1X6
1X6
1X7
DUCT A
DUCT C
X104a
X105
T1
F4
F5
F6
U1
Z1
F1
X152
Q15

21.17 - Cubicle components GA 90 VSD+ - (200V-400V-500V/50Hz, 460V/60Hz - IEC, 230V-460V-575V/60Hz - UL-cUL) - Full-Feature (20/07/2017 - 11/12/2018)

(((MOVOL:200V , MOVOL:400V , MOVOL:500V) + FREQ:50HZ , FREQ:60HZ + MOVOL:460V) + CAPPRE:IEC , (MOVOL:230V , MOVOL:460V , MOVOL:575V) + CAPPRE:ULCUL + FREQ:60HZ) + IDRY:Y + MODEL:GA90VP_16

Ref	Part Number	Qty	Name	Validity	EL
	1088 0039 04	2	TERMINAL	**(20/07/2017 - 20/08/2018)** ((((CAPPRM:AS1210 , CAPPRM:CE , CAPPRM:MHLW , CAPPRM:MOM) + MOVOL:400V , CAPPRM:CE + MOVOL:500V , CAPPRM:MHLW + MOVOL:200V) + FREQ:50HZ , (CAPPRM:ASME , CAPPRM:MHLW) + FREQ:60HZ + MOVOL:460V) + CAPPRE:IEC , (MOVOL:230V , MOVOL:460V , MOVOL:575V) + CAPPRE:ULCUL + CAPPRM:ASME + FREQ:60HZ) + COOL:AIR **(21/08/2018 - 11/12/2018)** ((((CAPPRM:AS1210 , CAPPRM:CE , CAPPRM:MHLW , CAPPRM:MOM) + MOVOL:400V , (CAPPRM:CE + MOVOL:500V , CAPPRM:MHLW + MOVOL:200V) + COOL:AIR) + FREQ:50HZ , (CAPPRM:ASME , CAPPRM:MHLW) + FREQ:60HZ + MOVOL:460V) + CAPPRE:IEC , ((MOVOL:230V , MOVOL:575V) + COOL:AIR , MOVOL:460V) + CAPPRE:ULCUL + CAPPRM:ASME + FREQ:60HZ)	
	1088 0039 02	1	PLATE	**(20/07/2017 - 20/08/2018)** ((((CAPPRM:AS1210 , CAPPRM:CE , CAPPRM:MHLW , CAPPRM:MOM) + MOVOL:400V , CAPPRM:CE + MOVOL:500V , CAPPRM:MHLW + MOVOL:200V) + FREQ:50HZ , (CAPPRM:ASME , CAPPRM:MHLW) + FREQ:60HZ + MOVOL:460V) + CAPPRE:IEC , (MOVOL:230V , MOVOL:460V , MOVOL:575V) + CAPPRE:ULCUL + CAPPRM:ASME + FREQ:60HZ) + COOL:AIR **(21/08/2018 - 11/12/2018)** ((((CAPPRM:AS1210 , CAPPRM:CE , CAPPRM:MHLW , CAPPRM:MOM) + MOVOL:400V , (CAPPRM:CE + MOVOL:500V , CAPPRM:MHLW + MOVOL:200V) + COOL:AIR) + FREQ:50HZ , (CAPPRM:ASME , CAPPRM:MHLW) + FREQ:60HZ + MOVOL:460V) + CAPPRE:IEC , ((MOVOL:230V , MOVOL:575V) + COOL:AIR , MOVOL:460V) + CAPPRE:ULCUL + CAPPRM:ASME + FREQ:60HZ)	
	1088 0039 34	13	TERMINAL	**(20/07/2017 - 20/08/2018)** ((((CAPPRM:AS1210 , CAPPRM:CE , CAPPRM:MHLW , CAPPRM:MOM) + MOVOL:400V , CAPPRM:CE + MOVOL:500V , CAPPRM:MHLW + MOVOL:200V) + FREQ:50HZ , (CAPPRM:ASME , CAPPRM:MHLW) + FREQ:60HZ + MOVOL:460V) + CAPPRE:IEC , (MOVOL:230V , MOVOL:460V , MOVOL:575V) + CAPPRE:ULCUL + CAPPRM:ASME + FREQ:60HZ) + COOL:AIR **(21/08/2018 - 11/12/2018)** ((((CAPPRM:AS1210 , CAPPRM:CE , CAPPRM:MHLW , CAPPRM:MOM) + MOVOL:400V , (CAPPRM:CE + MOVOL:500V , CAPPRM:MHLW + MOVOL:200V) + COOL:AIR) + FREQ:50HZ , (CAPPRM:ASME , CAPPRM:MHLW) + FREQ:60HZ + MOVOL:460V) + CAPPRE:IEC , ((MOVOL:230V , MOVOL:575V) + COOL:AIR , MOVOL:460V) + CAPPRE:ULCUL + CAPPRM:ASME + FREQ:60HZ)	1X6
	1088 0037 69	3	CONNECTOR	**(20/07/2017 - 20/08/2018)** ((((CAPPRM:AS1210 , CAPPRM:CE , CAPPRM:MHLW , CAPPRM:MOM) + MOVOL:400V , CAPPRM:CE + MOVOL:500V , CAPPRM:MHLW + MOVOL:200V) + FREQ:50HZ , (CAPPRM:ASME , CAPPRM:MHLW) + FREQ:60HZ + MOVOL:460V) + CAPPRE:IEC , (MOVOL:230V , MOVOL:460V , MOVOL:575V) + CAPPRE:ULCUL + CAPPRM:ASME + FREQ:60HZ) + COOL:AIR **(21/08/2018 - 11/12/2018)** ((((CAPPRM:AS1210 , CAPPRM:CE , CAPPRM:MHLW , CAPPRM:MOM) + MOVOL:400V , (CAPPRM:CE + MOVOL:500V , CAPPRM:MHLW + MOVOL:200V) + COOL:AIR) + FREQ:50HZ , (CAPPRM:ASME , CAPPRM:MHLW) + FREQ:60HZ + MOVOL:460V) + CAPPRE:IEC , ((MOVOL:230V , MOVOL:575V) + COOL:AIR , MOVOL:460V) + CAPPRE:ULCUL + CAPPRM:ASME + FREQ:60HZ)	1X7

Legend:

CAPPRE:IEC - Component approval electrical:IEC
CAPPRE:ULCUL - Component approval electrical:UL/cUL
CAPPRM:AS1210 - Component approval mechanical:AS1210
CAPPRM:ASME - Component approval mechanical:ASME
CAPPRM:CE - Component approval mechanical:CE
CAPPRM:MHLW - Component approval mechanical:MHLW
CAPPRM:MOM - Component approval mechanical:MOM
COOL:AIR - Cooling:Air cooled
FREQ:50HZ - Frequency:50 Hz
FREQ:60HZ - Frequency:60 Hz
IDRY:Y - Integrated dryer:Yes
MODEL:GA90VP_16 - Model:GA 90VSD+
MOVOL:200V - Supply voltage:200 V
MOVOL:230V - Supply voltage:230 V
MOVOL:400V - Supply voltage:400 V
MOVOL:460V - Supply voltage:460 V
MOVOL:500V - Supply voltage:500 V
MOVOL:575V - Supply voltage:575 V

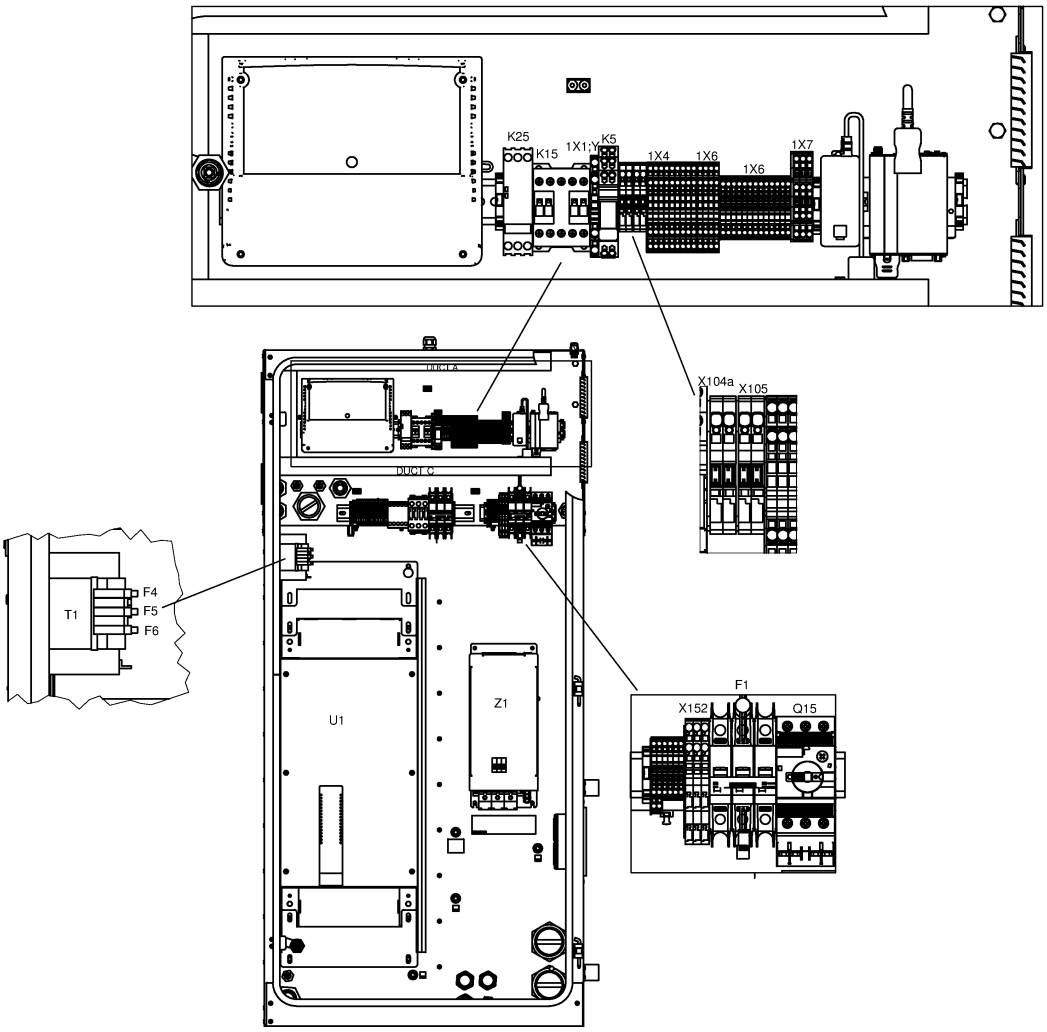
K25
K15
1X1:Y
K5
1X4
1X6
1X6
1X7
DUCT A
DUCT C
X104a
X105
T1
F4
F5
F6
U1
Z1
F1
X152
Q15

21.17 - Cubicle components GA 90 VSD+ - (200V-400V-500V/50Hz, 460V/60Hz - IEC, 230V-460V-575V/60Hz - UL-cUL) - Full-Feature (20/07/2017 - 11/12/2018)

(((MOVOL:200V , MOVOL:400V , MOVOL:500V) + FREQ:50HZ , FREQ:60HZ + MOVOL:460V) + CAPPRE:IEC , (MOVOL:230V , MOVOL:460V , MOVOL:575V) + CAPPRE:ULCUL + FREQ:60HZ) + IDRY:Y + MODEL:GA90VP_16

Ref	Part Number	Qty	Name	Validity	EL
	1088 0039 35	1	PLATE	**(20/07/2017 - 20/08/2018)** ((((CAPPRM:AS1210 , CAPPRM:CE , CAPPRM:MHLW , CAPPRM:MOM) + MOVOL:400V , CAPPRM:CE + MOVOL:500V , CAPPRM:MHLW + MOVOL:200V) + FREQ:50HZ , (CAPPRM:ASME , CAPPRM:MHLW) + FREQ:60HZ + MOVOL:460V) + CAPPRE:IEC , (MOVOL:230V , MOVOL:460V , MOVOL:575V) + CAPPRE:ULCUL + CAPPRM:ASME + FREQ:60HZ) + COOL:AIR **(21/08/2018 - 11/12/2018)** ((((CAPPRM:AS1210 , CAPPRM:CE , CAPPRM:MHLW , CAPPRM:MOM) + MOVOL:400V , (CAPPRM:CE + MOVOL:500V , CAPPRM:MHLW + MOVOL:200V) + COOL:AIR) + FREQ:50HZ , (CAPPRM:ASME , CAPPRM:MHLW) + FREQ:60HZ + MOVOL:460V) + CAPPRE:IEC , ((MOVOL:230V , MOVOL:575V) + COOL:AIR , MOVOL:460V) + CAPPRE:ULCUL + CAPPRM:ASME + FREQ:60HZ)	1X6
	1088 0040 37	1	END PLATE	**(20/07/2017 - 20/08/2018)** ((((CAPPRM:AS1210 , CAPPRM:CE , CAPPRM:MHLW , CAPPRM:MOM) + MOVOL:400V , CAPPRM:CE + MOVOL:500V , CAPPRM:MHLW + MOVOL:200V) + FREQ:50HZ , (CAPPRM:ASME , CAPPRM:MHLW) + FREQ:60HZ + MOVOL:460V) + CAPPRE:IEC , (MOVOL:230V , MOVOL:460V , MOVOL:575V) + CAPPRE:ULCUL + CAPPRM:ASME + FREQ:60HZ) + COOL:AIR **(21/08/2018 - 11/12/2018)** ((((CAPPRM:AS1210 , CAPPRM:CE , CAPPRM:MHLW , CAPPRM:MOM) + MOVOL:400V , (CAPPRM:CE + MOVOL:500V , CAPPRM:MHLW + MOVOL:200V) + COOL:AIR) + FREQ:50HZ , (CAPPRM:ASME , CAPPRM:MHLW) + FREQ:60HZ + MOVOL:460V) + CAPPRE:IEC , ((MOVOL:230V , MOVOL:575V) + COOL:AIR , MOVOL:460V) + CAPPRE:ULCUL + CAPPRM:ASME + FREQ:60HZ)	1X7
	1088 0039 36	9	TERMINAL	**(20/07/2017 - 20/08/2018)** ((((CAPPRM:AS1210 , CAPPRM:CE , CAPPRM:MHLW , CAPPRM:MOM) + MOVOL:400V , CAPPRM:CE + MOVOL:500V , CAPPRM:MHLW + MOVOL:200V) + FREQ:50HZ , (CAPPRM:ASME , CAPPRM:MHLW) + FREQ:60HZ + MOVOL:460V) + CAPPRE:IEC , (MOVOL:230V , MOVOL:460V , MOVOL:575V) + CAPPRE:ULCUL + CAPPRM:ASME + FREQ:60HZ) + COOL:AIR **(21/08/2018 - 11/12/2018)** ((((CAPPRM:AS1210 , CAPPRM:CE , CAPPRM:MHLW , CAPPRM:MOM) + MOVOL:400V , (CAPPRM:CE + MOVOL:500V , CAPPRM:MHLW + MOVOL:200V) + COOL:AIR) + FREQ:50HZ , (CAPPRM:ASME , CAPPRM:MHLW) + FREQ:60HZ + MOVOL:460V) + CAPPRE:IEC , ((MOVOL:230V , MOVOL:575V) + COOL:AIR , MOVOL:460V) + CAPPRE:ULCUL + CAPPRM:ASME + FREQ:60HZ)	1X4
	1088 0039 36	4	TERMINAL	**(20/07/2017 - 20/08/2018)** ((((CAPPRM:AS1210 , CAPPRM:CE , CAPPRM:MHLW , CAPPRM:MOM) + MOVOL:400V , CAPPRM:CE + MOVOL:500V , CAPPRM:MHLW + MOVOL:200V) + FREQ:50HZ , (CAPPRM:ASME , CAPPRM:MHLW) + FREQ:60HZ + MOVOL:460V) + CAPPRE:IEC , (MOVOL:230V , MOVOL:460V , MOVOL:575V) + CAPPRE:ULCUL + CAPPRM:ASME + FREQ:60HZ) + COOL:AIR **(21/08/2018 - 11/12/2018)** ((((CAPPRM:AS1210 , CAPPRM:CE , CAPPRM:MHLW , CAPPRM:MOM) + MOVOL:400V , (CAPPRM:CE + MOVOL:500V , CAPPRM:MHLW + MOVOL:200V) + COOL:AIR) + FREQ:50HZ , (CAPPRM:ASME , CAPPRM:MHLW) + FREQ:60HZ + MOVOL:460V) + CAPPRE:IEC , ((MOVOL:230V , MOVOL:575V) + COOL:AIR , MOVOL:460V) + CAPPRE:ULCUL + CAPPRM:ASME + FREQ:60HZ)	1X6

Legend:

CAPPRE:IEC - Component approval electrical:IEC
CAPPRE:ULCUL - Component approval electrical:UL/cUL
CAPPRM:AS1210 - Component approval mechanical:AS1210
CAPPRM:ASME - Component approval mechanical:ASME
CAPPRM:CE - Component approval mechanical:CE
CAPPRM:MHLW - Component approval mechanical:MHLW
CAPPRM:MOM - Component approval mechanical:MOM
COOL:AIR - Cooling:Air cooled
FREQ:50HZ - Frequency:50 Hz
FREQ:60HZ - Frequency:60 Hz
IDRY:Y - Integrated dryer:Yes
MODEL:GA90VP_16 - Model:GA 90VSD+
MOVOL:200V - Supply voltage:200 V
MOVOL:230V - Supply voltage:230 V
MOVOL:400V - Supply voltage:400 V
MOVOL:460V - Supply voltage:460 V
MOVOL:500V - Supply voltage:500 V
MOVOL:575V - Supply voltage:575 V

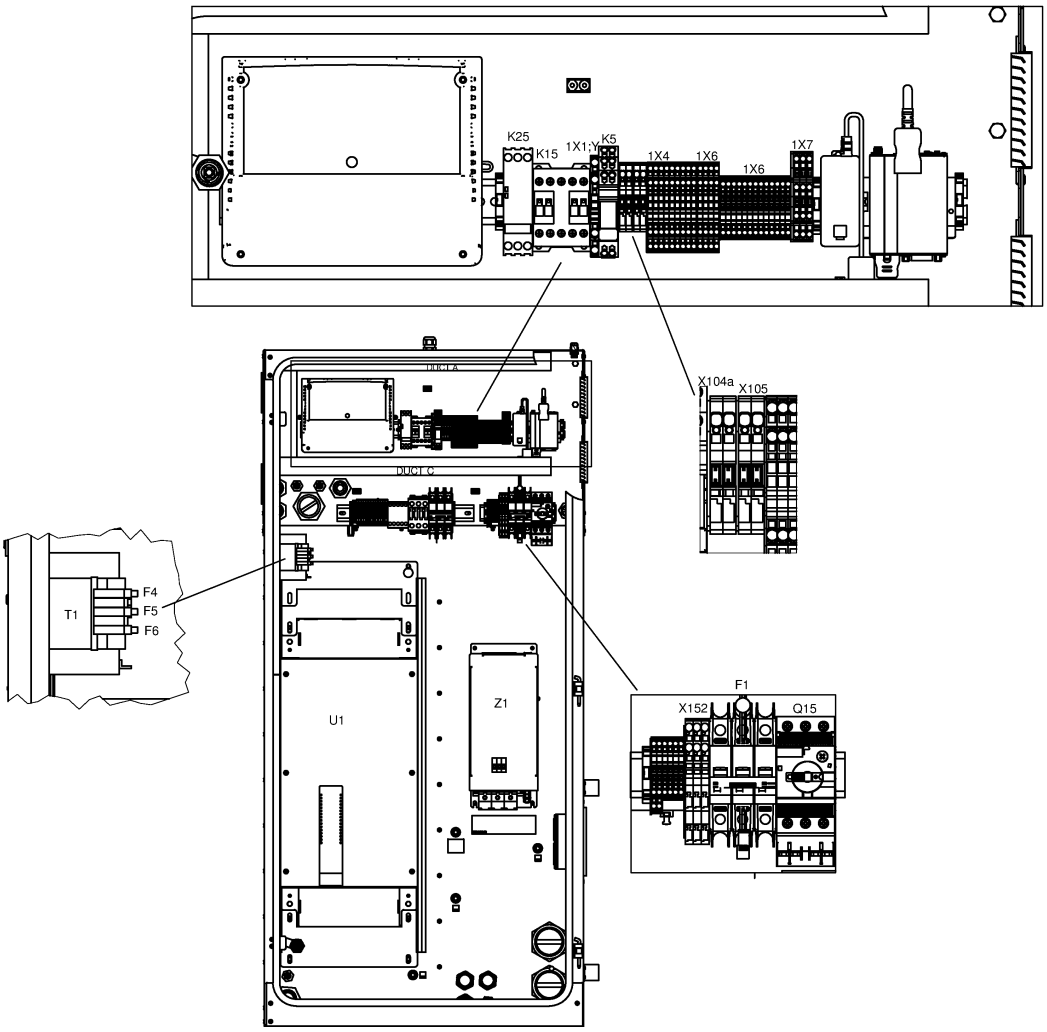
K25
K15
1X1:Y
K5
1X4
1X6
1X6
1X7
DUCT A
DUCT C
X104a
X105
T1
F4
F5
F6
U1
Z1
F1
X152
Q15

21.17 - Cubicle components GA 90 VSD+ - (200V-400V-500V/50Hz, 460V/60Hz - IEC, 230V-460V-575V/60Hz - UL-cUL) - Full-Feature (20/07/2017 - 11/12/2018)

(((MOVOL:200V , MOVOL:400V , MOVOL:500V) + FREQ:50HZ , FREQ:60HZ + MOVOL:460V) + CAPPRE:IEC , (MOVOL:230V , MOVOL:460V , MOVOL:575V) + CAPPRE:ULCUL + FREQ:60HZ) + IDRY:Y + MODEL:GA90VP_16

Ref	Part Number	Qty	Name	Validity	EL
	1088 0039 37	1	END PLATE	**(20/07/2017 - 20/08/2018)** ((((CAPPRM:AS1210 , CAPPRM:CE , CAPPRM:MHLW , CAPPRM:MOM) + MOVOL:400V , CAPPRM:CE + MOVOL:500V , CAPPRM:MHLW + MOVOL:200V) + FREQ:50HZ , (CAPPRM:ASME , CAPPRM:MHLW) + FREQ:60HZ + MOVOL:460V) + CAPPRE:IEC , (MOVOL:230V , MOVOL:460V , MOVOL:575V) + CAPPRE:ULCUL + CAPPRM:ASME + FREQ:60HZ) + COOL:AIR **(21/08/2018 - 11/12/2018)** ((((CAPPRM:AS1210 , CAPPRM:CE , CAPPRM:MHLW , CAPPRM:MOM) + MOVOL:400V , (CAPPRM:CE + MOVOL:500V , CAPPRM:MHLW + MOVOL:200V) + COOL:AIR) + FREQ:50HZ , (CAPPRM:ASME , CAPPRM:MHLW) + FREQ:60HZ + MOVOL:460V) + CAPPRE:IEC , ((MOVOL:230V , MOVOL:575V) + COOL:AIR , MOVOL:460V) + CAPPRE:ULCUL + CAPPRM:ASME + FREQ:60HZ)	1X4
	1088 0039 37	1	END PLATE	**(20/07/2017 - 20/08/2018)** ((((CAPPRM:AS1210 , CAPPRM:CE , CAPPRM:MHLW , CAPPRM:MOM) + MOVOL:400V , CAPPRM:CE + MOVOL:500V , CAPPRM:MHLW + MOVOL:200V) + FREQ:50HZ , (CAPPRM:ASME , CAPPRM:MHLW) + FREQ:60HZ + MOVOL:460V) + CAPPRE:IEC , (MOVOL:230V , MOVOL:460V , MOVOL:575V) + CAPPRE:ULCUL + CAPPRM:ASME + FREQ:60HZ) + COOL:AIR **(21/08/2018 - 11/12/2018)** ((((CAPPRM:AS1210 , CAPPRM:CE , CAPPRM:MHLW , CAPPRM:MOM) + MOVOL:400V , (CAPPRM:CE + MOVOL:500V , CAPPRM:MHLW + MOVOL:200V) + COOL:AIR) + FREQ:50HZ , (CAPPRM:ASME , CAPPRM:MHLW) + FREQ:60HZ + MOVOL:460V) + CAPPRE:IEC , ((MOVOL:230V , MOVOL:575V) + COOL:AIR , MOVOL:460V) + CAPPRE:ULCUL + CAPPRM:ASME + FREQ:60HZ)	1X6
	1088 0039 37	1	END PLATE	**(20/07/2017 - 20/08/2018)** ((((CAPPRM:AS1210 , CAPPRM:CE , CAPPRM:MHLW , CAPPRM:MOM) + MOVOL:400V , CAPPRM:CE + MOVOL:500V , CAPPRM:MHLW + MOVOL:200V) + FREQ:50HZ , (CAPPRM:ASME , CAPPRM:MHLW) + FREQ:60HZ + MOVOL:460V) + CAPPRE:IEC , (MOVOL:230V , MOVOL:460V , MOVOL:575V) + CAPPRE:ULCUL + CAPPRM:ASME + FREQ:60HZ) + COOL:AIR **(21/08/2018 - 11/12/2018)** ((((CAPPRM:AS1210 , CAPPRM:CE , CAPPRM:MHLW , CAPPRM:MOM) + MOVOL:400V , (CAPPRM:CE + MOVOL:500V , CAPPRM:MHLW + MOVOL:200V) + COOL:AIR) + FREQ:50HZ , (CAPPRM:ASME , CAPPRM:MHLW) + FREQ:60HZ + MOVOL:460V) + CAPPRE:IEC , ((MOVOL:230V , MOVOL:575V) + COOL:AIR , MOVOL:460V) + CAPPRE:ULCUL + CAPPRM:ASME + FREQ:60HZ)	1X1:Y/D
	1088 0037 81	1	CONNECTOR	**(20/07/2017 - 20/08/2018)** ((((CAPPRM:AS1210 , CAPPRM:CE , CAPPRM:MHLW , CAPPRM:MOM) + MOVOL:400V , CAPPRM:CE + MOVOL:500V , CAPPRM:MHLW + MOVOL:200V) + FREQ:50HZ , (CAPPRM:ASME , CAPPRM:MHLW) + FREQ:60HZ + MOVOL:460V) + CAPPRE:IEC , (MOVOL:230V , MOVOL:460V , MOVOL:575V) + CAPPRE:ULCUL + CAPPRM:ASME + FREQ:60HZ) + COOL:AIR **(21/08/2018 - 11/12/2018)** ((((CAPPRM:AS1210 , CAPPRM:CE , CAPPRM:MHLW , CAPPRM:MOM) + MOVOL:400V , (CAPPRM:CE + MOVOL:500V , CAPPRM:MHLW + MOVOL:200V) + COOL:AIR) + FREQ:50HZ , (CAPPRM:ASME , CAPPRM:MHLW) + FREQ:60HZ + MOVOL:460V) + CAPPRE:IEC , ((MOVOL:230V , MOVOL:575V) + COOL:AIR , MOVOL:460V) + CAPPRE:ULCUL + CAPPRM:ASME + FREQ:60HZ)	2X27

Legend:

CAPPRE:IEC - Component approval electrical:IEC
CAPPRE:ULCUL - Component approval electrical:UL/cUL
CAPPRM:AS1210 - Component approval mechanical:AS1210
CAPPRM:ASME - Component approval mechanical:ASME
CAPPRM:CE - Component approval mechanical:CE
CAPPRM:MHLW - Component approval mechanical:MHLW
CAPPRM:MOM - Component approval mechanical:MOM
COOL:AIR - Cooling:Air cooled
FREQ:50HZ - Frequency:50 Hz
FREQ:60HZ - Frequency:60 Hz
IDRY:Y - Integrated dryer:Yes
MODEL:GA90VP_16 - Model:GA 90VSD+
MOVOL:200V - Supply voltage:200 V
MOVOL:230V - Supply voltage:230 V
MOVOL:400V - Supply voltage:400 V
MOVOL:460V - Supply voltage:460 V
MOVOL:500V - Supply voltage:500 V
MOVOL:575V - Supply voltage:575 V

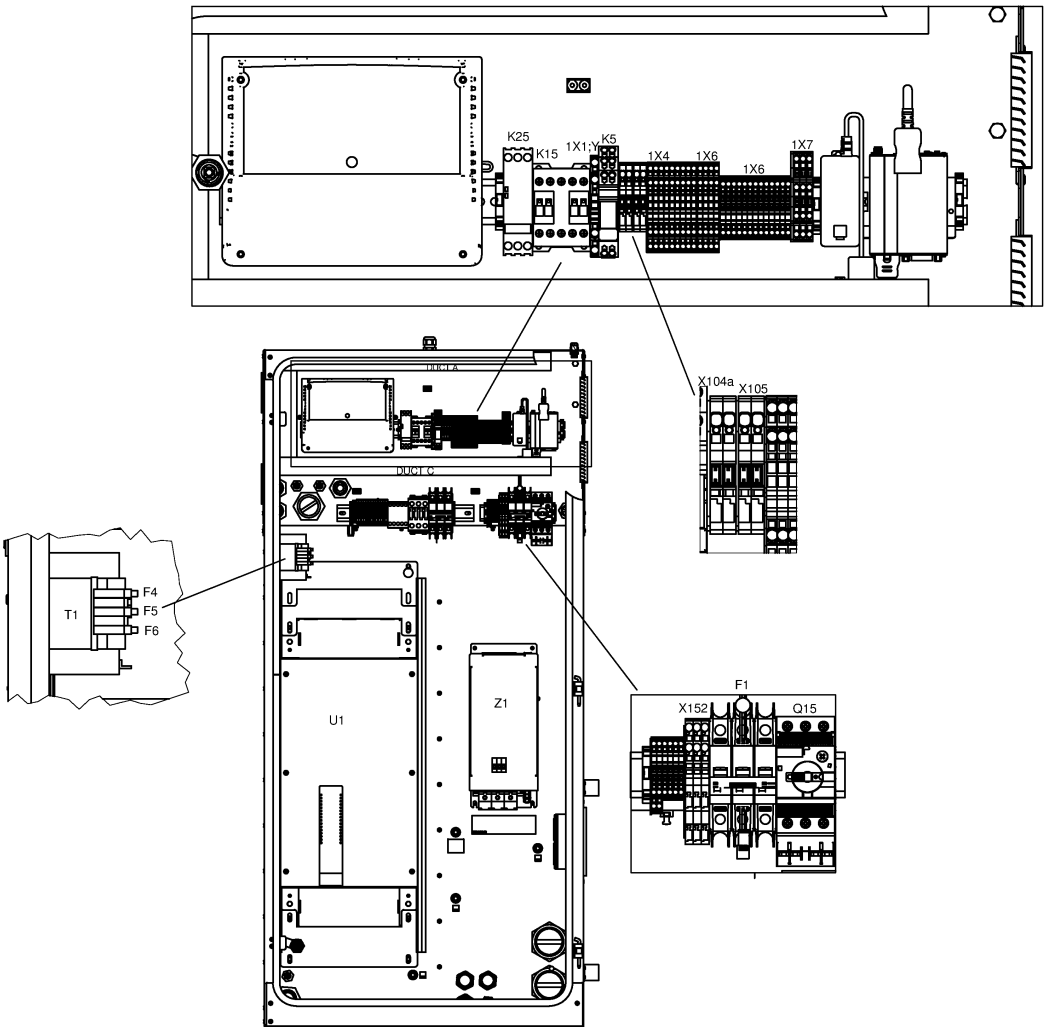
K25
K15
1X1:Y
K5
1X4
1X6
1X6
1X7
DUCT A
DUCT C
X104a
X105
T1
F4
F5
F6
U1
Z1
F1
X152
Q15

21.17 - Cubicle components GA 90 VSD+ - (200V-400V-500V/50Hz, 460V/60Hz - IEC, 230V-460V-575V/60Hz - UL-cUL) - Full-Feature (20/07/2017 - 11/12/2018)

(((MOVOL:200V , MOVOL:400V , MOVOL:500V) + FREQ:50HZ , FREQ:60HZ + MOVOL:460V) + CAPPRE:IEC , (MOVOL:230V , MOVOL:460V , MOVOL:575V) + CAPPRE:ULCUL + FREQ:60HZ) + IDRY:Y + MODEL:GA90VP_16

Ref	Part Number	Qty	Name	Validity	EL
	1088 0037 80	1	CONNECTOR	**(20/07/2017 - 20/08/2018)** ((((CAPPRM:AS1210 , CAPPRM:CE , CAPPRM:MHLW , CAPPRM:MOM) + MOVOL:400V , CAPPRM:CE + MOVOL:500V , CAPPRM:MHLW + MOVOL:200V) + FREQ:50HZ , (CAPPRM:ASME , CAPPRM:MHLW) + FREQ:60HZ + MOVOL:460V) + CAPPRE:IEC , (MOVOL:230V , MOVOL:460V , MOVOL:575V) + CAPPRE:ULCUL + CAPPRM:ASME + FREQ:60HZ) + COOL:AIR **(21/08/2018 - 11/12/2018)** ((((CAPPRM:AS1210 , CAPPRM:CE , CAPPRM:MHLW , CAPPRM:MOM) + MOVOL:400V , (CAPPRM:CE + MOVOL:500V , CAPPRM:MHLW + MOVOL:200V) + COOL:AIR) + FREQ:50HZ , (CAPPRM:ASME , CAPPRM:MHLW) + FREQ:60HZ + MOVOL:460V) + CAPPRE:IEC , ((MOVOL:230V , MOVOL:575V) + COOL:AIR , MOVOL:460V) + CAPPRE:ULCUL + CAPPRM:ASME + FREQ:60HZ)	2X28
	1088 0031 32	1	CONNECTOR	**(20/07/2017 - 20/08/2018)** ((((CAPPRM:AS1210 , CAPPRM:CE , CAPPRM:MHLW , CAPPRM:MOM) + MOVOL:400V , CAPPRM:CE + MOVOL:500V , CAPPRM:MHLW + MOVOL:200V) + FREQ:50HZ , (CAPPRM:ASME , CAPPRM:MHLW) + FREQ:60HZ + MOVOL:460V) + CAPPRE:IEC , (MOVOL:230V , MOVOL:460V , MOVOL:575V) + CAPPRE:ULCUL + CAPPRM:ASME + FREQ:60HZ) + COOL:AIR **(21/08/2018 - 11/12/2018)** ((((CAPPRM:AS1210 , CAPPRM:CE , CAPPRM:MHLW , CAPPRM:MOM) + MOVOL:400V , (CAPPRM:CE + MOVOL:500V , CAPPRM:MHLW + MOVOL:200V) + COOL:AIR) + FREQ:50HZ , (CAPPRM:ASME , CAPPRM:MHLW) + FREQ:60HZ + MOVOL:460V) + CAPPRE:IEC , ((MOVOL:230V , MOVOL:575V) + COOL:AIR , MOVOL:460V) + CAPPRE:ULCUL + CAPPRM:ASME + FREQ:60HZ)	2X30
	1088 0031 26	1	CONNECTOR 6-POLE	**(20/07/2017 - 20/08/2018)** ((((CAPPRM:AS1210 , CAPPRM:CE , CAPPRM:MHLW , CAPPRM:MOM) + MOVOL:400V , CAPPRM:CE + MOVOL:500V , CAPPRM:MHLW + MOVOL:200V) + FREQ:50HZ , (CAPPRM:ASME , CAPPRM:MHLW) + FREQ:60HZ + MOVOL:460V) + CAPPRE:IEC , (MOVOL:230V , MOVOL:460V , MOVOL:575V) + CAPPRE:ULCUL + CAPPRM:ASME + FREQ:60HZ) + COOL:AIR **(21/08/2018 - 11/12/2018)** ((((CAPPRM:AS1210 , CAPPRM:CE , CAPPRM:MHLW , CAPPRM:MOM) + MOVOL:400V , (CAPPRM:CE + MOVOL:500V , CAPPRM:MHLW + MOVOL:200V) + COOL:AIR) + FREQ:50HZ , (CAPPRM:ASME , CAPPRM:MHLW) + FREQ:60HZ + MOVOL:460V) + CAPPRE:IEC , ((MOVOL:230V , MOVOL:575V) + COOL:AIR , MOVOL:460V) + CAPPRE:ULCUL + CAPPRM:ASME + FREQ:60HZ)	2X31
	~~1089 9664 06~~	1	SWITCH	**(20/07/2017 - 20/08/2018)** ((((CAPPRM:AS1210 , CAPPRM:CE , CAPPRM:MHLW , CAPPRM:MOM) + MOVOL:400V , CAPPRM:CE + MOVOL:500V , CAPPRM:MHLW + MOVOL:200V) + FREQ:50HZ , (CAPPRM:ASME , CAPPRM:MHLW) + FREQ:60HZ + MOVOL:460V) + CAPPRE:IEC , (MOVOL:230V , MOVOL:460V , MOVOL:575V) + CAPPRE:ULCUL + CAPPRM:ASME + FREQ:60HZ) + COOL:AIR **(21/08/2018 - 11/12/2018)** ((((CAPPRM:AS1210 , CAPPRM:CE , CAPPRM:MHLW , CAPPRM:MOM) + MOVOL:400V , (CAPPRM:CE + MOVOL:500V , CAPPRM:MHLW + MOVOL:200V) + COOL:AIR) + FREQ:50HZ , (CAPPRM:ASME , CAPPRM:MHLW) + FREQ:60HZ + MOVOL:460V) + CAPPRE:IEC , ((MOVOL:230V , MOVOL:575V) + COOL:AIR , MOVOL:460V) + CAPPRE:ULCUL + CAPPRM:ASME + FREQ:60HZ)	Q15

Legend:

CAPPRE:IEC - Component approval electrical:IEC
CAPPRE:ULCUL - Component approval electrical:UL/cUL
CAPPRM:AS1210 - Component approval mechanical:AS1210
CAPPRM:ASME - Component approval mechanical:ASME
CAPPRM:CE - Component approval mechanical:CE
CAPPRM:MHLW - Component approval mechanical:MHLW
CAPPRM:MOM - Component approval mechanical:MOM
COOL:AIR - Cooling:Air cooled
FREQ:50HZ - Frequency:50 Hz
FREQ:60HZ - Frequency:60 Hz
IDRY:Y - Integrated dryer:Yes
MODEL:GA90VP_16 - Model:GA 90VSD+
MOVOL:200V - Supply voltage:200 V
MOVOL:230V - Supply voltage:230 V
MOVOL:400V - Supply voltage:400 V
MOVOL:460V - Supply voltage:460 V
MOVOL:500V - Supply voltage:500 V
MOVOL:575V - Supply voltage:575 V

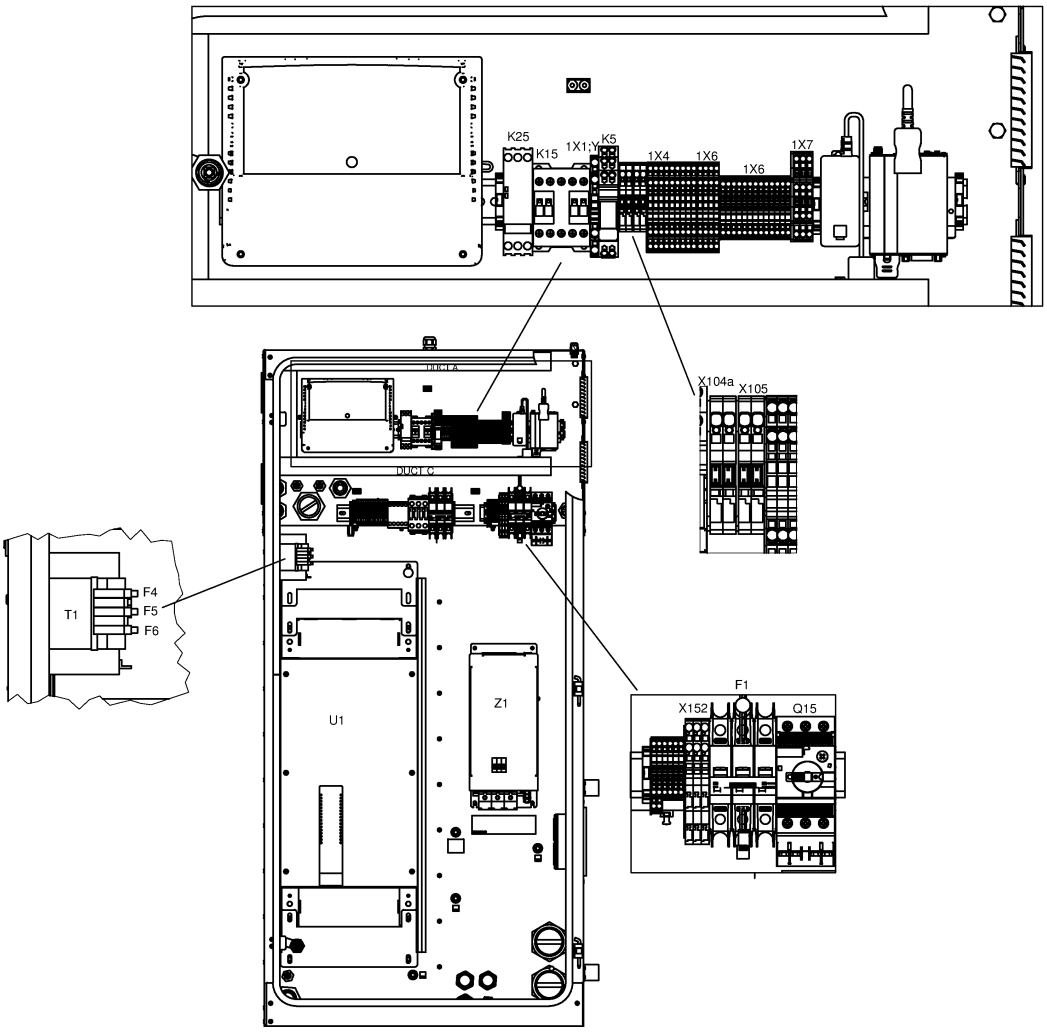
K25
K15
1X1:Y
K5
1X4
1X6
1X6
1X7
DUCT A
DUCT C
X104a
X105
T1
F4
F5
F6
U1
Z1
F1
X152
Q15

21.17 - Cubicle components GA 90 VSD+ - (200V-400V-500V/50Hz, 460V/60Hz - IEC, 230V-460V-575V/60Hz - UL-cUL) - Full-Feature (20/07/2017 - 11/12/2018)

(((MOVOL:200V , MOVOL:400V , MOVOL:500V) + FREQ:50HZ , FREQ:60HZ + MOVOL:460V) + CAPPRE:IEC , (MOVOL:230V , MOVOL:460V , MOVOL:575V) + CAPPRE:ULCUL + FREQ:60HZ) + IDRY:Y + MODEL:GA90VP_16

Ref	Part Number	Qty	Name	Validity	EL
	Substituted by:	1089 9551 97 - AUX.CONTACT CIRCUIT BREAKER (quantity: 1)			
	1089 9551 18	1	CIRCUIT BREAKER	**(20/07/2017 - 20/08/2018)** ((((CAPPRM:AS1210 , CAPPRM:CE , CAPPRM:MHLW , CAPPRM:MOM) + MOVOL:400V , CAPPRM:CE + MOVOL:500V , CAPPRM:MHLW + MOVOL:200V) + FREQ:50HZ , (CAPPRM:ASME , CAPPRM:MHLW) + FREQ:60HZ + MOVOL:460V) + CAPPRE:IEC , (MOVOL:230V , MOVOL:460V , MOVOL:575V) + CAPPRE:ULCUL + CAPPRM:ASME + FREQ:60HZ) + COOL:AIR **(21/08/2018 - 11/12/2018)** ((((CAPPRM:AS1210 , CAPPRM:CE , CAPPRM:MHLW , CAPPRM:MOM) + MOVOL:400V , (CAPPRM:CE + MOVOL:500V , CAPPRM:MHLW + MOVOL:200V) + COOL:AIR) + FREQ:50HZ , (CAPPRM:ASME , CAPPRM:MHLW) + FREQ:60HZ + MOVOL:460V) + CAPPRE:IEC , ((MOVOL:230V , MOVOL:575V) + COOL:AIR , MOVOL:460V) + CAPPRE:ULCUL + CAPPRM:ASME + FREQ:60HZ)	Q15
	1088 0038 26	1	TERMINAL	**(20/07/2017 - 20/08/2018)** ((((CAPPRM:AS1210 , CAPPRM:CE , CAPPRM:MHLW , CAPPRM:MOM) + MOVOL:400V , CAPPRM:CE + MOVOL:500V , CAPPRM:MHLW + MOVOL:200V) + FREQ:50HZ , (CAPPRM:ASME , CAPPRM:MHLW) + FREQ:60HZ + MOVOL:460V) + CAPPRE:IEC , (MOVOL:230V , MOVOL:460V , MOVOL:575V) + CAPPRE:ULCUL + CAPPRM:ASME + FREQ:60HZ) + COOL:AIR **(21/08/2018 - 11/12/2018)** ((((CAPPRM:AS1210 , CAPPRM:CE , CAPPRM:MHLW , CAPPRM:MOM) + MOVOL:400V , (CAPPRM:CE + MOVOL:500V , CAPPRM:MHLW + MOVOL:200V) + COOL:AIR) + FREQ:50HZ , (CAPPRM:ASME , CAPPRM:MHLW) + FREQ:60HZ + MOVOL:460V) + CAPPRE:IEC , ((MOVOL:230V , MOVOL:575V) + COOL:AIR , MOVOL:460V) + CAPPRE:ULCUL + CAPPRM:ASME + FREQ:60HZ)	1X1:Y/D
	1089 9602 79	1	CONTACTOR 110 V	**(20/07/2017 - 20/08/2018)** ((((CAPPRM:AS1210 , CAPPRM:CE , CAPPRM:MHLW , CAPPRM:MOM) + MOVOL:400V , CAPPRM:CE + MOVOL:500V , CAPPRM:MHLW + MOVOL:200V) + FREQ:50HZ , (CAPPRM:ASME , CAPPRM:MHLW) + FREQ:60HZ + MOVOL:460V) + CAPPRE:IEC , (MOVOL:230V , MOVOL:460V , MOVOL:575V) + CAPPRE:ULCUL + CAPPRM:ASME + FREQ:60HZ) + COOL:AIR **(21/08/2018 - 11/12/2018)** ((((CAPPRM:AS1210 , CAPPRM:CE , CAPPRM:MHLW , CAPPRM:MOM) + MOVOL:400V , (CAPPRM:CE + MOVOL:500V , CAPPRM:MHLW + MOVOL:200V) + COOL:AIR) + FREQ:50HZ , (CAPPRM:ASME , CAPPRM:MHLW) + FREQ:60HZ + MOVOL:460V) + CAPPRE:IEC , ((MOVOL:230V , MOVOL:575V) + COOL:AIR , MOVOL:460V) + CAPPRE:ULCUL + CAPPRM:ASME + FREQ:60HZ)	K15

Legend:

CAPPRE:IEC - Component approval electrical:IEC
CAPPRE:ULCUL - Component approval electrical:UL/cUL
CAPPRM:AS1210 - Component approval mechanical:AS1210
CAPPRM:ASME - Component approval mechanical:ASME
CAPPRM:CE - Component approval mechanical:CE
CAPPRM:MHLW - Component approval mechanical:MHLW
CAPPRM:MOM - Component approval mechanical:MOM
COOL:AIR - Cooling:Air cooled
FREQ:50HZ - Frequency:50 Hz
FREQ:60HZ - Frequency:60 Hz
IDRY:Y - Integrated dryer:Yes
MODEL:GA90VP_16 - Model:GA 90VSD+
MOVOL:200V - Supply voltage:200 V
MOVOL:230V - Supply voltage:230 V
MOVOL:400V - Supply voltage:400 V
MOVOL:460V - Supply voltage:460 V
MOVOL:500V - Supply voltage:500 V
MOVOL:575V - Supply voltage:575 V

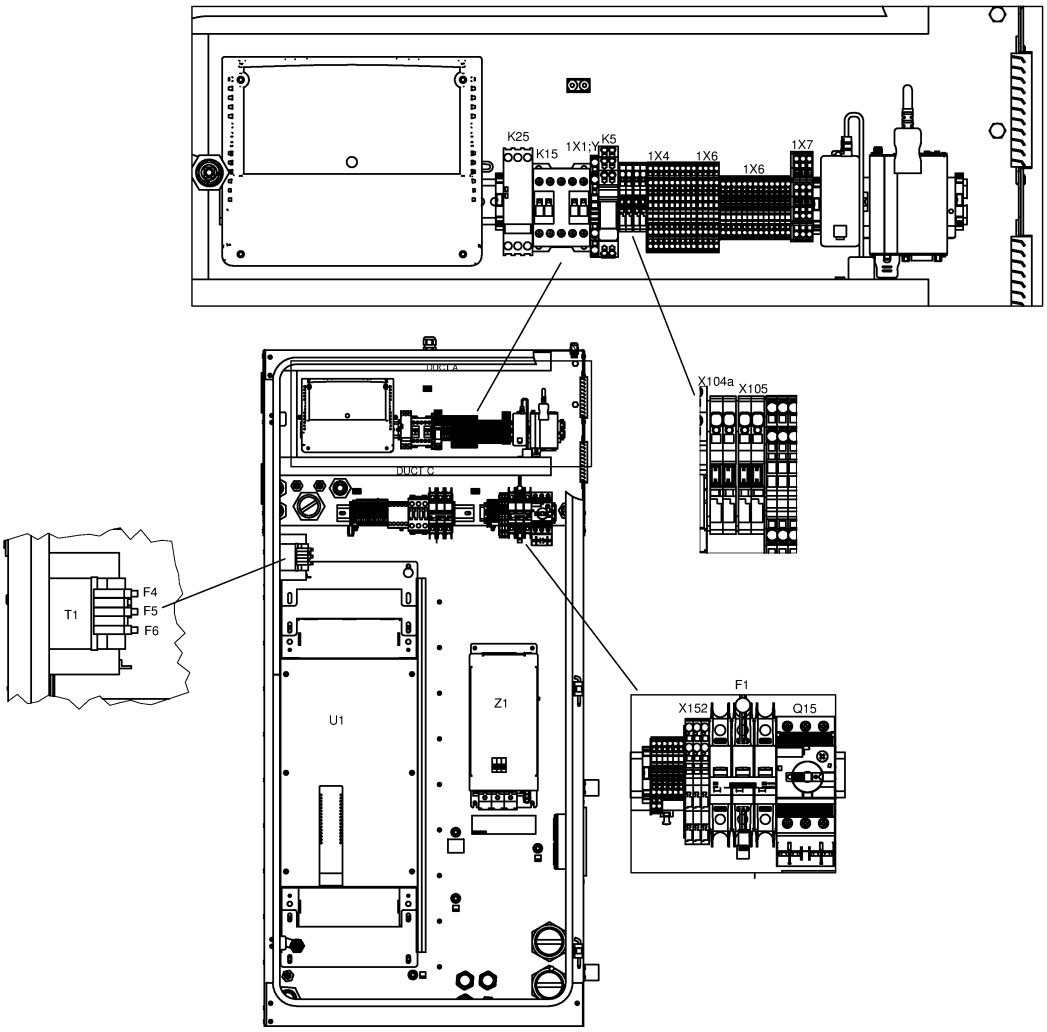
K25
K15
1X1:Y
K5
1X4
1X6
1X6
1X7
DUCT A
DUCT C
X104a
X105
T1
F4
F5
F6
U1
Z1
F1
X152
Q15

21.17 - Cubicle components GA 90 VSD+ - (200V-400V-500V/50Hz, 460V/60Hz - IEC, 230V-460V-575V/60Hz - UL-cUL) - Full-Feature (20/07/2017 - 11/12/2018)

(((MOVOL:200V , MOVOL:400V , MOVOL:500V) + FREQ:50HZ , FREQ:60HZ + MOVOL:460V) + CAPPRE:IEC , (MOVOL:230V , MOVOL:460V , MOVOL:575V) + CAPPRE:ULCUL + FREQ:60HZ) + IDRY:Y + MODEL:GA90VP_16

Ref	Part Number	Qty	Name	Validity	EL
	1089 9461 26	1	PHASE SEQUENCE RELAY	**(20/07/2017 - 20/08/2018)** ((((CAPPRM:AS1210 , CAPPRM:CE , CAPPRM:MHLW , CAPPRM:MOM) + MOVOL:400V , CAPPRM:CE + MOVOL:500V , CAPPRM:MHLW + MOVOL:200V) + FREQ:50HZ , (CAPPRM:ASME , CAPPRM:MHLW) + FREQ:60HZ + MOVOL:460V) + CAPPRE:IEC , (MOVOL:230V , MOVOL:460V , MOVOL:575V) + CAPPRE:ULCUL + CAPPRM:ASME + FREQ:60HZ) + COOL:AIR **(21/08/2018 - 11/12/2018)** ((((CAPPRM:AS1210 , CAPPRM:CE , CAPPRM:MHLW , CAPPRM:MOM) + MOVOL:400V , (CAPPRM:CE + MOVOL:500V , CAPPRM:MHLW + MOVOL:200V) + COOL:AIR) + FREQ:50HZ , (CAPPRM:ASME , CAPPRM:MHLW) + FREQ:60HZ + MOVOL:460V) + CAPPRE:IEC , ((MOVOL:230V , MOVOL:575V) + COOL:AIR , MOVOL:460V) + CAPPRE:ULCUL + CAPPRM:ASME + FREQ:60HZ)	K25
	1088 0032 17	1	RELAY 115 VAC	**(20/07/2017 - 20/08/2018)** ((((CAPPRM:AS1210 , CAPPRM:CE , CAPPRM:MHLW , CAPPRM:MOM) + MOVOL:400V , CAPPRM:CE + MOVOL:500V , CAPPRM:MHLW + MOVOL:200V) + FREQ:50HZ , (CAPPRM:ASME , CAPPRM:MHLW) + FREQ:60HZ + MOVOL:460V) + CAPPRE:IEC , (MOVOL:230V , MOVOL:460V , MOVOL:575V) + CAPPRE:ULCUL + CAPPRM:ASME + FREQ:60HZ) + COOL:AIR **(21/08/2018 - 11/12/2018)** ((((CAPPRM:AS1210 , CAPPRM:CE , CAPPRM:MHLW , CAPPRM:MOM) + MOVOL:400V , (CAPPRM:CE + MOVOL:500V , CAPPRM:MHLW + MOVOL:200V) + COOL:AIR) + FREQ:50HZ , (CAPPRM:ASME , CAPPRM:MHLW) + FREQ:60HZ + MOVOL:460V) + CAPPRE:IEC , ((MOVOL:230V , MOVOL:575V) + COOL:AIR , MOVOL:460V) + CAPPRE:ULCUL + CAPPRM:ASME + FREQ:60HZ)	K5
	0991 8011 21	AR	CABLE TRAY	**(20/07/2017 - 20/08/2018)** ((((CAPPRM:AS1210 , CAPPRM:CE , CAPPRM:MHLW , CAPPRM:MOM) + MOVOL:400V , CAPPRM:CE + MOVOL:500V , CAPPRM:MHLW + MOVOL:200V) + FREQ:50HZ , (CAPPRM:ASME , CAPPRM:MHLW) + FREQ:60HZ + MOVOL:460V) + CAPPRE:IEC , (MOVOL:230V , MOVOL:460V , MOVOL:575V) + CAPPRE:ULCUL + CAPPRM:ASME + FREQ:60HZ) + COOL:AIR **(21/08/2018 - 11/12/2018)** ((((CAPPRM:AS1210 , CAPPRM:CE , CAPPRM:MHLW , CAPPRM:MOM) + MOVOL:400V , (CAPPRM:CE + MOVOL:500V , CAPPRM:MHLW + MOVOL:200V) + COOL:AIR) + FREQ:50HZ , (CAPPRM:ASME , CAPPRM:MHLW) + FREQ:60HZ + MOVOL:460V) + CAPPRE:IEC , ((MOVOL:230V , MOVOL:575V) + COOL:AIR , MOVOL:460V) + CAPPRE:ULCUL + CAPPRM:ASME + FREQ:60HZ)	L=1384mm
	1900 2203 02	1	DRYER RAIL	**(20/07/2017 - 20/08/2018)** ((((CAPPRM:AS1210 , CAPPRM:CE , CAPPRM:MHLW , CAPPRM:MOM) + MOVOL:400V , CAPPRM:CE + MOVOL:500V , CAPPRM:MHLW + MOVOL:200V) + FREQ:50HZ , (CAPPRM:ASME , CAPPRM:MHLW) + FREQ:60HZ + MOVOL:460V) + CAPPRE:IEC , (MOVOL:230V , MOVOL:460V , MOVOL:575V) + CAPPRE:ULCUL + CAPPRM:ASME + FREQ:60HZ) + COOL:AIR **(21/08/2018 - 11/12/2018)** ((((CAPPRM:AS1210 , CAPPRM:CE , CAPPRM:MHLW , CAPPRM:MOM) + MOVOL:400V , (CAPPRM:CE + MOVOL:500V , CAPPRM:MHLW + MOVOL:200V) + COOL:AIR) + FREQ:50HZ , (CAPPRM:ASME , CAPPRM:MHLW) + FREQ:60HZ + MOVOL:460V) + CAPPRE:IEC , ((MOVOL:230V , MOVOL:575V) + COOL:AIR , MOVOL:460V) + CAPPRE:ULCUL + CAPPRM:ASME + FREQ:60HZ)	

Legend:

CAPPRE:IEC - Component approval electrical:IEC
CAPPRE:ULCUL - Component approval electrical:UL/cUL
CAPPRM:AS1210 - Component approval mechanical:AS1210
CAPPRM:ASME - Component approval mechanical:ASME
CAPPRM:CE - Component approval mechanical:CE
CAPPRM:MHLW - Component approval mechanical:MHLW
CAPPRM:MOM - Component approval mechanical:MOM
COOL:AIR - Cooling:Air cooled
FREQ:50HZ - Frequency:50 Hz
FREQ:60HZ - Frequency:60 Hz
IDRY:Y - Integrated dryer:Yes
MODEL:GA90VP_16 - Model:GA 90VSD+
MOVOL:200V - Supply voltage:200 V
MOVOL:230V - Supply voltage:230 V
MOVOL:400V - Supply voltage:400 V
MOVOL:460V - Supply voltage:460 V
MOVOL:500V - Supply voltage:500 V
MOVOL:575V - Supply voltage:575 V

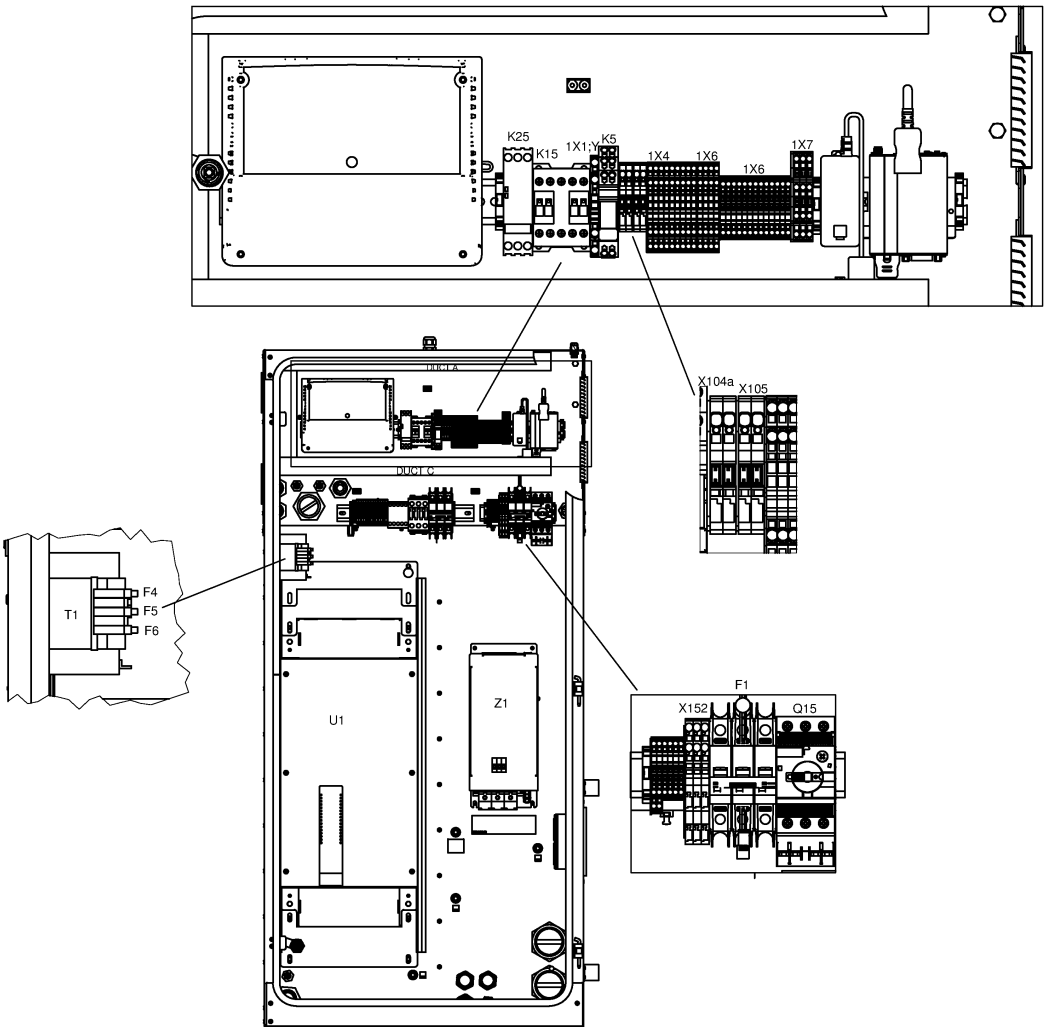
K25
K15
1X1:Y
K5
1X4
1X6
1X6
1X7
DUCT A
DUCT C
X104a
X105
T1
F4
F5
F6
U1
Z1
F1
X152
Q15

21.17 - Cubicle components GA 90 VSD+ - (200V-400V-500V/50Hz, 460V/60Hz - IEC, 230V-460V-575V/60Hz - UL-cUL) - Full-Feature (20/07/2017 - 11/12/2018)

(((MOVOL:200V , MOVOL:400V , MOVOL:500V) + FREQ:50HZ , FREQ:60HZ + MOVOL:460V) + CAPPRE:IEC , (MOVOL:230V , MOVOL:460V , MOVOL:575V) + CAPPRE:ULCUL + FREQ:60HZ) + IDRY:Y + MODEL:GA90VP_16

Ref	Part Number	Qty	Name	Validity	EL
	Electrical legend:	Without trafo on dryer			
	1088 0031 13	1	CONNECTOR 13-POLE	**(20/07/2017 - 20/08/2018)** ((((CAPPRM:AS1210 , CAPPRM:CE , CAPPRM:MHLW , CAPPRM:MOM) + MOVOL:400V , CAPPRM:CE + MOVOL:500V , CAPPRM:MHLW + MOVOL:200V) + FREQ:50HZ , (CAPPRM:ASME , CAPPRM:MHLW) + FREQ:60HZ + MOVOL:460V) + CAPPRE:IEC , (MOVOL:230V , MOVOL:460V , MOVOL:575V) + CAPPRE:ULCUL + CAPPRM:ASME + FREQ:60HZ) + COOL:AIR **(21/08/2018 - 11/12/2018)** ((((CAPPRM:AS1210 , CAPPRM:CE , CAPPRM:MHLW , CAPPRM:MOM) + MOVOL:400V , (CAPPRM:CE + MOVOL:500V , CAPPRM:MHLW + MOVOL:200V) + COOL:AIR) + FREQ:50HZ , (CAPPRM:ASME , CAPPRM:MHLW) + FREQ:60HZ + MOVOL:460V) + CAPPRE:IEC , ((MOVOL:230V , MOVOL:575V) + COOL:AIR , MOVOL:460V) + CAPPRE:ULCUL + CAPPRM:ASME + FREQ:60HZ)	1X30
	1088 0037 82	1	CONNECTOR	**(20/07/2017 - 20/08/2018)** ((((CAPPRM:AS1210 , CAPPRM:CE , CAPPRM:MHLW , CAPPRM:MOM) + MOVOL:400V , CAPPRM:CE + MOVOL:500V , CAPPRM:MHLW + MOVOL:200V) + FREQ:50HZ , (CAPPRM:ASME , CAPPRM:MHLW) + FREQ:60HZ + MOVOL:460V) + CAPPRE:IEC , (MOVOL:230V , MOVOL:460V , MOVOL:575V) + CAPPRE:ULCUL + CAPPRM:ASME + FREQ:60HZ) + COOL:AIR **(21/08/2018 - 11/12/2018)** ((((CAPPRM:AS1210 , CAPPRM:CE , CAPPRM:MHLW , CAPPRM:MOM) + MOVOL:400V , (CAPPRM:CE + MOVOL:500V , CAPPRM:MHLW + MOVOL:200V) + COOL:AIR) + FREQ:50HZ , (CAPPRM:ASME , CAPPRM:MHLW) + FREQ:60HZ + MOVOL:460V) + CAPPRE:IEC , ((MOVOL:230V , MOVOL:575V) + COOL:AIR , MOVOL:460V) + CAPPRE:ULCUL + CAPPRM:ASME + FREQ:60HZ)	3X34
	0697 9811 13	1	PLUG	**(20/07/2017 - 20/08/2018)** ((((CAPPRM:AS1210 , CAPPRM:CE , CAPPRM:MHLW , CAPPRM:MOM) + MOVOL:400V , CAPPRM:CE + MOVOL:500V , CAPPRM:MHLW + MOVOL:200V) + FREQ:50HZ , (CAPPRM:ASME , CAPPRM:MHLW) + FREQ:60HZ + MOVOL:460V) + CAPPRE:IEC , (MOVOL:230V , MOVOL:460V , MOVOL:575V) + CAPPRE:ULCUL + CAPPRM:ASME + FREQ:60HZ) + COOL:AIR **(21/08/2018 - 11/12/2018)** ((((CAPPRM:AS1210 , CAPPRM:CE , CAPPRM:MHLW , CAPPRM:MOM) + MOVOL:400V , (CAPPRM:CE + MOVOL:500V , CAPPRM:MHLW + MOVOL:200V) + COOL:AIR) + FREQ:50HZ , (CAPPRM:ASME , CAPPRM:MHLW) + FREQ:60HZ + MOVOL:460V) + CAPPRE:IEC , ((MOVOL:230V , MOVOL:575V) + COOL:AIR , MOVOL:460V) + CAPPRE:ULCUL + CAPPRM:ASME + FREQ:60HZ)	
	Electrical legend:	Energy recovery			

Legend:

CAPPRE:IEC - Component approval electrical:IEC	CAPPRE:ULCUL - Component approval electrical:UL/cUL	CAPPRM:AS1210 - Component approval mechanical:AS1210
CAPPRM:ASME - Component approval mechanical:ASME	CAPPRM:CE - Component approval mechanical:CE	CAPPRM:MHLW - Component approval mechanical:MHLW
CAPPRM:MOM - Component approval mechanical:MOM	COOL:AIR - Cooling:Air cooled	FREQ:50HZ - Frequency:50 Hz
FREQ:60HZ - Frequency:60 Hz	IDRY:Y - Integrated dryer:Yes	MODEL:GA90VP_16 - Model:GA 90VSD+
MOVOL:200V - Supply voltage:200 V	MOVOL:230V - Supply voltage:230 V	MOVOL:400V - Supply voltage:400 V
MOVOL:460V - Supply voltage:460 V	MOVOL:500V - Supply voltage:500 V	MOVOL:575V - Supply voltage:575 V

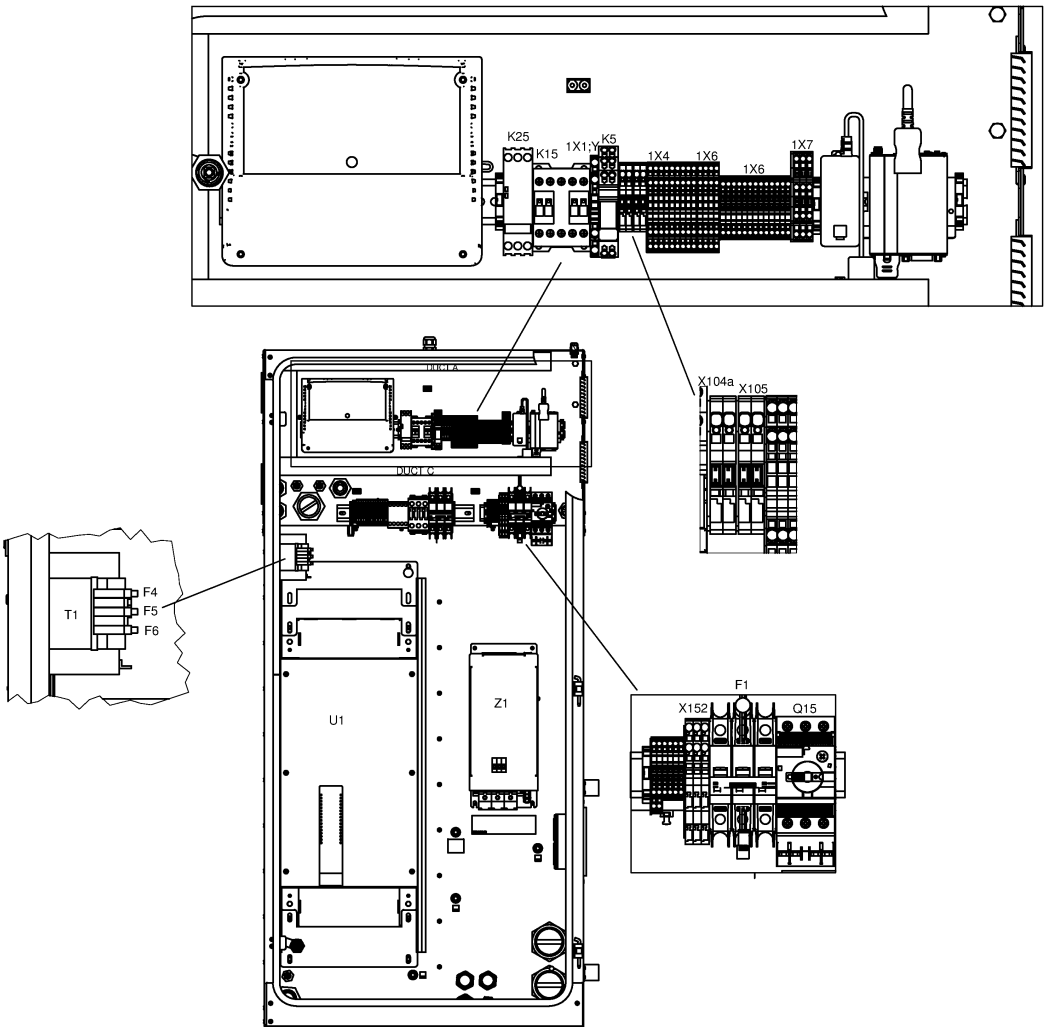
K25
K15
1X1:Y
K5
1X4
1X6
1X6
1X7
DUCT A
DUCT C
X104a
X105
T1
F4
F5
F6
U1
Z1
F1
X152
Q15

21.17 - Cubicle components GA 90 VSD+ - (200V-400V-500V/50Hz, 460V/60Hz - IEC, 230V-460V-575V/60Hz - UL-cUL) - Full-Feature (20/07/2017 - 11/12/2018)

(((MOVOL:200V , MOVOL:400V , MOVOL:500V) + FREQ:50HZ , FREQ:60HZ + MOVOL:460V) + CAPPRE:IEC , (MOVOL:230V , MOVOL:460V , MOVOL:575V) + CAPPRE:ULCUL + FREQ:60HZ) + IDRY:Y + MODEL:GA90VP_16

Ref	Part Number	Qty	Name	Validity	EL
	0989 3700 44	1	LOCKNUT	**(20/07/2017 - 20/08/2018)** ((((CAPPRM:AS1210 , CAPPRM:CE , CAPPRM:MHLW , CAPPRM:MOM) + MOVOL:400V , CAPPRM:CE + MOVOL:500V , CAPPRM:MHLW + MOVOL:200V) + FREQ:50HZ , (CAPPRM:ASME , CAPPRM:MHLW) + FREQ:60HZ + MOVOL:460V) + CAPPRE:IEC , (MOVOL:230V , MOVOL:460V , MOVOL:575V) + CAPPRE:ULCUL + CAPPRM:ASME + FREQ:60HZ) + COOL:AIR **(21/08/2018 - 11/12/2018)** ((((CAPPRM:AS1210 , CAPPRM:CE , CAPPRM:MHLW , CAPPRM:MOM) + MOVOL:400V , (CAPPRM:CE + MOVOL:500V , CAPPRM:MHLW + MOVOL:200V) + COOL:AIR) + FREQ:50HZ , (CAPPRM:ASME , CAPPRM:MHLW) + FREQ:60HZ + MOVOL:460V) + CAPPRE:IEC , ((MOVOL:230V , MOVOL:575V) + COOL:AIR , MOVOL:460V) + CAPPRE:ULCUL + CAPPRM:ASME + FREQ:60HZ)	
	Electrical legend:	Energy recovery			
	0697 9811 12	1	PLUG	**(20/07/2017 - 20/08/2018)** ((((CAPPRM:AS1210 , CAPPRM:CE , CAPPRM:MHLW , CAPPRM:MOM) + MOVOL:400V , CAPPRM:CE + MOVOL:500V , CAPPRM:MHLW + MOVOL:200V) + FREQ:50HZ , (CAPPRM:ASME , CAPPRM:MHLW) + FREQ:60HZ + MOVOL:460V) + CAPPRE:IEC , (MOVOL:230V , MOVOL:460V , MOVOL:575V) + CAPPRE:ULCUL + CAPPRM:ASME + FREQ:60HZ) + COOL:AIR **(21/08/2018 - 11/12/2018)** ((((CAPPRM:AS1210 , CAPPRM:CE , CAPPRM:MHLW , CAPPRM:MOM) + MOVOL:400V , (CAPPRM:CE + MOVOL:500V , CAPPRM:MHLW + MOVOL:200V) + COOL:AIR) + FREQ:50HZ , (CAPPRM:ASME , CAPPRM:MHLW) + FREQ:60HZ + MOVOL:460V) + CAPPRE:IEC , ((MOVOL:230V , MOVOL:575V) + COOL:AIR , MOVOL:460V) + CAPPRE:ULCUL + CAPPRM:ASME + FREQ:60HZ)	
	Electrical legend:	Control circuit of T10			
	0989 3700 43	1	NUT	**(20/07/2017 - 20/08/2018)** ((((CAPPRM:AS1210 , CAPPRM:CE , CAPPRM:MHLW , CAPPRM:MOM) + MOVOL:400V , CAPPRM:CE + MOVOL:500V , CAPPRM:MHLW + MOVOL:200V) + FREQ:50HZ , (CAPPRM:ASME , CAPPRM:MHLW) + FREQ:60HZ + MOVOL:460V) + CAPPRE:IEC , (MOVOL:230V , MOVOL:460V , MOVOL:575V) + CAPPRE:ULCUL + CAPPRM:ASME + FREQ:60HZ) + COOL:AIR **(21/08/2018 - 11/12/2018)** ((((CAPPRM:AS1210 , CAPPRM:CE , CAPPRM:MHLW , CAPPRM:MOM) + MOVOL:400V , (CAPPRM:CE + MOVOL:500V , CAPPRM:MHLW + MOVOL:200V) + COOL:AIR) + FREQ:50HZ , (CAPPRM:ASME , CAPPRM:MHLW) + FREQ:60HZ + MOVOL:460V) + CAPPRE:IEC , ((MOVOL:230V , MOVOL:575V) + COOL:AIR , MOVOL:460V) + CAPPRE:ULCUL + CAPPRM:ASME + FREQ:60HZ)	
	Electrical legend:	Control circuit of T10			

Legend:

CAPPRE:IEC - Component approval electrical:IEC	CAPPRE:ULCUL - Component approval electrical:UL/cUL	CAPPRM:AS1210 - Component approval mechanical:AS1210
CAPPRM:ASME - Component approval mechanical:ASME	CAPPRM:CE - Component approval mechanical:CE	CAPPRM:MHLW - Component approval mechanical:MHLW
CAPPRM:MOM - Component approval mechanical:MOM	COOL:AIR - Cooling:Air cooled	FREQ:50HZ - Frequency:50 Hz
FREQ:60HZ - Frequency:60 Hz	IDRY:Y - Integrated dryer:Yes	MODEL:GA90VP_16 - Model:GA 90VSD+
MOVOL:200V - Supply voltage:200 V	MOVOL:230V - Supply voltage:230 V	MOVOL:400V - Supply voltage:400 V
MOVOL:460V - Supply voltage:460 V	MOVOL:500V - Supply voltage:500 V	MOVOL:575V - Supply voltage:575 V

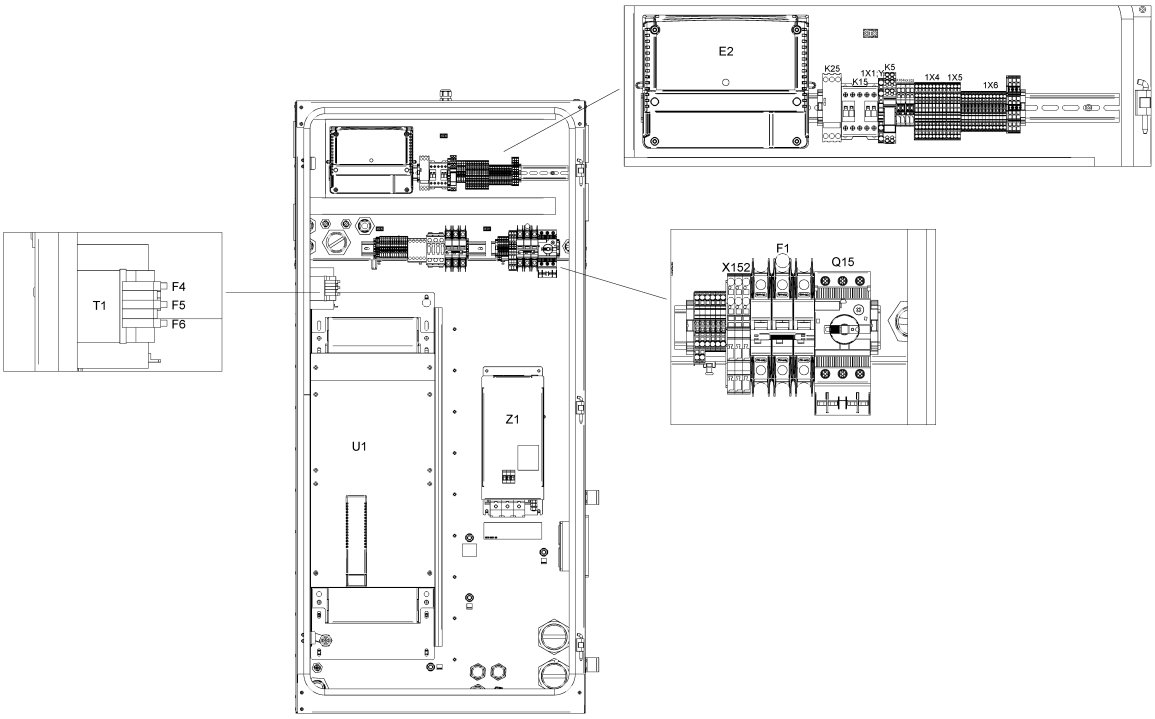
E2
K25
K15
1X1
K5
1X4
1X5
1X6
T1
F4
F5
F6
X152
F1
Q15
U1
Z1

21.18 - Cubicle components GA 90 VSD+ - (200V-400V-500V/50Hz, 460V/60Hz - IEC, 230V-460V-575V/60Hz - UL-cUL) - Full-Feature (12/12/2018 - 16/12/2019)

(((MOVOL:200V , MOVOL:400V , MOVOL:500V) + FREQ:50HZ , FREQ:60HZ + MOVOL:460V) + CAPPRE:IEC , (MOVOL:230V , MOVOL:460V , MOVOL:575V) + CAPPRE:ULCUL + FREQ:60HZ) + IDRY:Y + MODEL:GA90VP_16

Ref	Part Number	Qty	Name	Validity	EL
	1900 2202 30	1	CUBICLE	**(12/12/2018 - 16/12/2019)**	
	9820 3000 31	1	ASSEMBLY DRAWING	**(12/12/2018 - 24/02/2019)** ((((CAPPRM:AS1210 , CAPPRM:CE , CAPPRM:MHLW , CAPPRM:MOM) + MOVOL:400V , (CAPPRM:CE + MOVOL:500V , CAPPRM:MHLW + MOVOL:200V) + COOL:AIR) + FREQ:50HZ , (CAPPRM:ASME , CAPPRM:MHLW) + FREQ:60HZ + MOVOL:460V) + CAPPRE:IEC , ((MOVOL:230V , MOVOL:575V) + COOL:AIR , MOVOL:460V) + CAPPRE:ULCUL + CAPPRM:ASME + FREQ:60HZ) **(25/02/2019 - 16/12/2019)** ((((CAPPRM:AS1210 , CAPPRM:CE , CAPPRM:MHLW , CAPPRM:MOM) + MOVOL:400V , CAPPRM:CE + MOVOL:500V , CAPPRM:MHLW + MOVOL:200V) + FREQ:50HZ , (CAPPRM:ASME , CAPPRM:MHLW) + FREQ:60HZ + MOVOL:460V) + CAPPRE:IEC , (MOVOL:230V , MOVOL:460V , MOVOL:575V) + CAPPRE:ULCUL + CAPPRM:ASME + FREQ:60HZ) + COOL:AIR	AD
	9820 3000 27	1	SERVICE DIAGRAM	**(12/12/2018 - 24/02/2019)** ((((CAPPRM:AS1210 , CAPPRM:CE , CAPPRM:MHLW , CAPPRM:MOM) + MOVOL:400V , (CAPPRM:CE + MOVOL:500V , CAPPRM:MHLW + MOVOL:200V) + COOL:AIR) + FREQ:50HZ , (CAPPRM:ASME , CAPPRM:MHLW) + FREQ:60HZ + MOVOL:460V) + CAPPRE:IEC , ((MOVOL:230V , MOVOL:575V) + COOL:AIR , MOVOL:460V) + CAPPRE:ULCUL + CAPPRM:ASME + FREQ:60HZ) **(25/02/2019 - 16/12/2019)** ((((CAPPRM:AS1210 , CAPPRM:CE , CAPPRM:MHLW , CAPPRM:MOM) + MOVOL:400V , CAPPRM:CE + MOVOL:500V , CAPPRM:MHLW + MOVOL:200V) + FREQ:50HZ , (CAPPRM:ASME , CAPPRM:MHLW) + FREQ:60HZ + MOVOL:460V) + CAPPRE:IEC , (MOVOL:230V , MOVOL:460V , MOVOL:575V) + CAPPRE:ULCUL + CAPPRM:ASME + FREQ:60HZ) + COOL:AIR	SD
	1622 3798 72	1	WIRE HARNESS	**(12/12/2018 - 24/02/2019)** ((((CAPPRM:AS1210 , CAPPRM:CE , CAPPRM:MHLW , CAPPRM:MOM) + MOVOL:400V , (CAPPRM:CE + MOVOL:500V , CAPPRM:MHLW + MOVOL:200V) + COOL:AIR) + FREQ:50HZ , (CAPPRM:ASME , CAPPRM:MHLW) + FREQ:60HZ + MOVOL:460V) + CAPPRE:IEC , ((MOVOL:230V , MOVOL:575V) + COOL:AIR , MOVOL:460V) + CAPPRE:ULCUL + CAPPRM:ASME + FREQ:60HZ) **(25/02/2019 - 16/12/2019)** ((((CAPPRM:AS1210 , CAPPRM:CE , CAPPRM:MHLW , CAPPRM:MOM) + MOVOL:400V , CAPPRM:CE + MOVOL:500V , CAPPRM:MHLW + MOVOL:200V) + FREQ:50HZ , (CAPPRM:ASME , CAPPRM:MHLW) + FREQ:60HZ + MOVOL:460V) + CAPPRE:IEC , (MOVOL:230V , MOVOL:460V , MOVOL:575V) + CAPPRE:ULCUL + CAPPRM:ASME + FREQ:60HZ) + COOL:AIR	Comm Cable

Legend:

CAPPRE:IEC - Component approval electrical:IEC
CAPPRE:ULCUL - Component approval electrical:UL/cUL
CAPPRM:AS1210 - Component approval mechanical:AS1210
CAPPRM:ASME - Component approval mechanical:ASME
CAPPRM:CE - Component approval mechanical:CE
CAPPRM:MHLW - Component approval mechanical:MHLW
CAPPRM:MOM - Component approval mechanical:MOM
COOL:AIR - Cooling:Air cooled
FREQ:50HZ - Frequency:50 Hz
FREQ:60HZ - Frequency:60 Hz
IDRY:Y - Integrated dryer:Yes
MODEL:GA90VP_16 - Model:GA 90VSD+
MOVOL:200V - Supply voltage:200 V
MOVOL:230V - Supply voltage:230 V
MOVOL:400V - Supply voltage:400 V
MOVOL:460V - Supply voltage:460 V
MOVOL:500V - Supply voltage:500 V
MOVOL:575V - Supply voltage:575 V

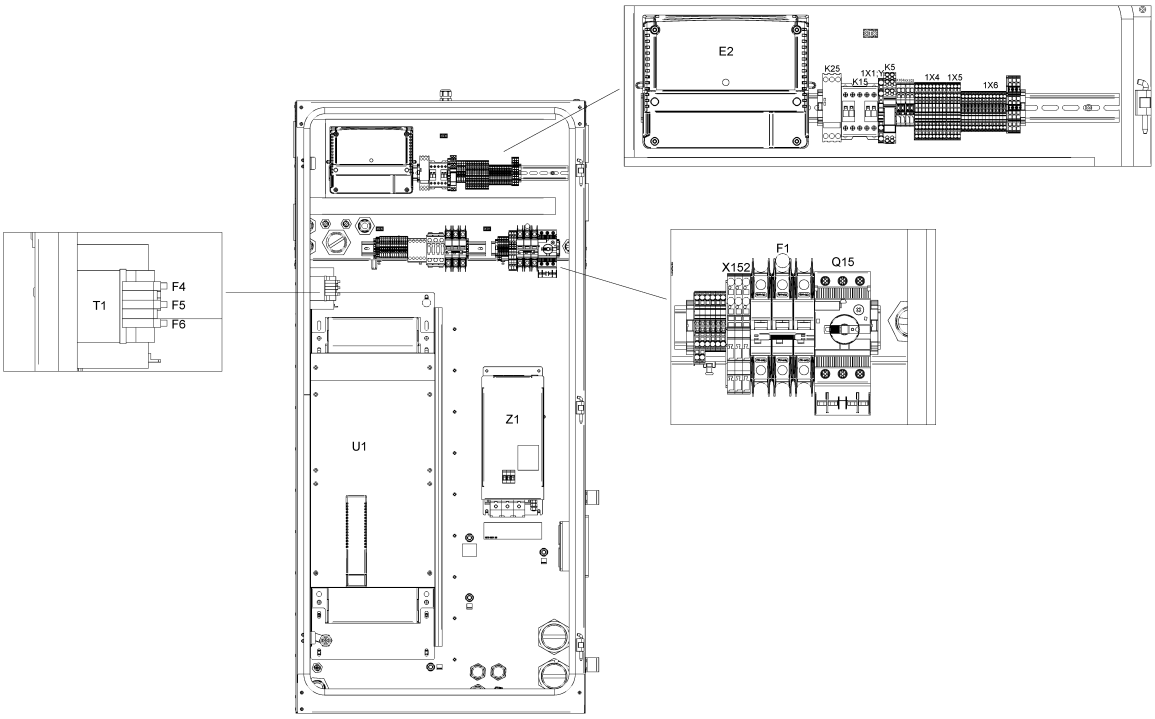
E2
K25
K15
1X1
K5
1X4
1X5
1X6
T1
F4
F5
F6
X152
F1
Q15
U1
Z1

21.18 - Cubicle components GA 90 VSD+ - (200V-400V-500V/50Hz, 460V/60Hz - IEC, 230V-460V-575V/60Hz - UL-cUL) - Full-Feature (12/12/2018 - 16/12/2019)

(((MOVOL:200V , MOVOL:400V , MOVOL:500V) + FREQ:50HZ , FREQ:60HZ + MOVOL:460V) + CAPPRE:IEC , (MOVOL:230V , MOVOL:460V , MOVOL:575V) + CAPPRE:ULCUL + FREQ:60HZ) + IDRY:Y + MODEL:GA90VP_16

Ref	Part Number	Qty	Name	Validity	EL
	1622 5099 04	1	DI CHANE CABLE (1400MM)	**(12/12/2018 - 24/02/2019)** ((((CAPPRM:AS1210 , CAPPRM:CE , CAPPRM:MHLW , CAPPRM:MOM) + MOVOL:400V , (CAPPRM:CE + MOVOL:500V , CAPPRM:MHLW + MOVOL:200V) + COOL:AIR) + FREQ:50HZ , (CAPPRM:ASME , CAPPRM:MHLW) + FREQ:60HZ + MOVOL:460V) + CAPPRE:IEC , ((MOVOL:230V , MOVOL:575V) + COOL:AIR , MOVOL:460V) + CAPPRE:ULCUL + CAPPRM:ASME + FREQ:60HZ) **(25/02/2019 - 16/12/2019)** ((((CAPPRM:AS1210 , CAPPRM:CE , CAPPRM:MHLW , CAPPRM:MOM) + MOVOL:400V , CAPPRM:CE + MOVOL:500V , CAPPRM:MHLW + MOVOL:200V) + FREQ:50HZ , (CAPPRM:ASME , CAPPRM:MHLW) + FREQ:60HZ + MOVOL:460V) + CAPPRE:IEC , (MOVOL:230V , MOVOL:460V , MOVOL:575V) + CAPPRE:ULCUL + CAPPRM:ASME + FREQ:60HZ) + COOL:AIR	
	Electrical legend:	Comm Cable Loose supply			
	1649 8001 22	1	CUBICLE	**(12/12/2018 - 24/02/2019)** ((((CAPPRM:AS1210 , CAPPRM:CE , CAPPRM:MHLW , CAPPRM:MOM) + MOVOL:400V , (CAPPRM:CE + MOVOL:500V , CAPPRM:MHLW + MOVOL:200V) + COOL:AIR) + FREQ:50HZ , (CAPPRM:ASME , CAPPRM:MHLW) + FREQ:60HZ + MOVOL:460V) + CAPPRE:IEC , ((MOVOL:230V , MOVOL:575V) + COOL:AIR , MOVOL:460V) + CAPPRE:ULCUL + CAPPRM:ASME + FREQ:60HZ) **(25/02/2019 - 16/12/2019)** ((((CAPPRM:AS1210 , CAPPRM:CE , CAPPRM:MHLW , CAPPRM:MOM) + MOVOL:400V , CAPPRM:CE + MOVOL:500V , CAPPRM:MHLW + MOVOL:200V) + FREQ:50HZ , (CAPPRM:ASME , CAPPRM:MHLW) + FREQ:60HZ + MOVOL:460V) + CAPPRE:IEC , (MOVOL:230V , MOVOL:460V , MOVOL:575V) + CAPPRE:ULCUL + CAPPRM:ASME + FREQ:60HZ) + COOL:AIR	MSA
	1649 8001 32	1	PLATE NEOS "D"	**(12/12/2018 - 24/02/2019)** ((((CAPPRM:AS1210 , CAPPRM:CE , CAPPRM:MHLW , CAPPRM:MOM) + MOVOL:400V , (CAPPRM:CE + MOVOL:500V , CAPPRM:MHLW + MOVOL:200V) + COOL:AIR) + FREQ:50HZ , (CAPPRM:ASME , CAPPRM:MHLW) + FREQ:60HZ + MOVOL:460V) + CAPPRE:IEC , ((MOVOL:230V , MOVOL:575V) + COOL:AIR , MOVOL:460V) + CAPPRE:ULCUL + CAPPRM:ASME + FREQ:60HZ) **(25/02/2019 - 16/12/2019)** ((((CAPPRM:AS1210 , CAPPRM:CE , CAPPRM:MHLW , CAPPRM:MOM) + MOVOL:400V , CAPPRM:CE + MOVOL:500V , CAPPRM:MHLW + MOVOL:200V) + FREQ:50HZ , (CAPPRM:ASME , CAPPRM:MHLW) + FREQ:60HZ + MOVOL:460V) + CAPPRE:IEC , (MOVOL:230V , MOVOL:460V , MOVOL:575V) + CAPPRE:ULCUL + CAPPRM:ASME + FREQ:60HZ) + COOL:AIR	
	Electrical legend:	Mounting plate			

Legend:

CAPPRE:IEC - Component approval electrical:IEC	CAPPRE:ULCUL - Component approval electrical:UL/cUL	CAPPRM:AS1210 - Component approval mechanical:AS1210
CAPPRM:ASME - Component approval mechanical:ASME	CAPPRM:CE - Component approval mechanical:CE	CAPPRM:MHLW - Component approval mechanical:MHLW
CAPPRM:MOM - Component approval mechanical:MOM	COOL:AIR - Cooling:Air cooled	FREQ:50HZ - Frequency:50 Hz
FREQ:60HZ - Frequency:60 Hz	IDRY:Y - Integrated dryer:Yes	MODEL:GA90VP_16 - Model:GA 90VSD+
MOVOL:200V - Supply voltage:200 V	MOVOL:230V - Supply voltage:230 V	MOVOL:400V - Supply voltage:400 V
MOVOL:460V - Supply voltage:460 V	MOVOL:500V - Supply voltage:500 V	MOVOL:575V - Supply voltage:575 V

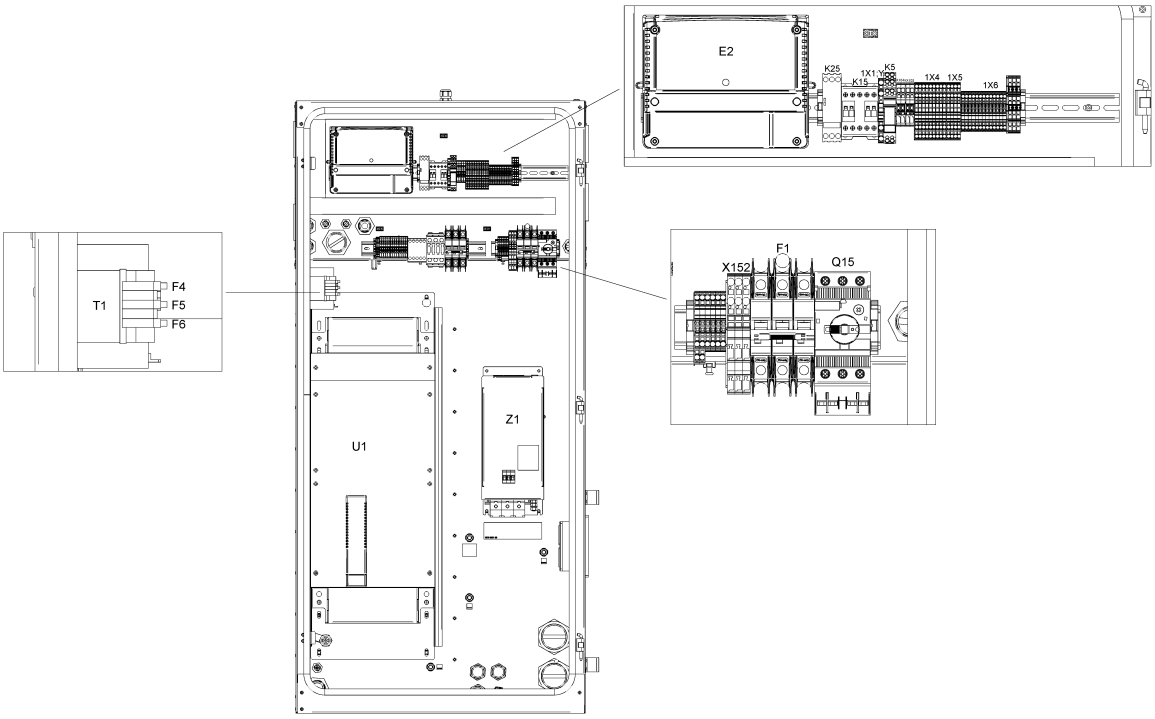
E2
K25
K15
1X1
K5
1X4
1X5
1X6
T1
F4
F5
F6
X152
F1
Q15
U1
Z1

21.18 - Cubicle components GA 90 VSD+ - (200V-400V-500V/50Hz, 460V/60Hz - IEC, 230V-460V-575V/60Hz - UL-cUL) - Full-Feature (12/12/2018 - 16/12/2019)

(((MOVOL:200V , MOVOL:400V , MOVOL:500V) + FREQ:50HZ , FREQ:60HZ + MOVOL:460V) + CAPPRE:IEC , (MOVOL:230V , MOVOL:460V , MOVOL:575V) + CAPPRE:ULCUL + FREQ:60HZ) + IDRY:Y + MODEL:GA90VP_16

Ref	Part Number	Qty	Name	Validity	EL
	1649 8003 85	1	MOUNTING PLATE	**(12/12/2018 - 24/02/2019)** ((((CAPPRM:AS1210 , CAPPRM:CE , CAPPRM:MHLW , CAPPRM:MOM) + MOVOL:400V , (CAPPRM:CE + MOVOL:500V , CAPPRM:MHLW + MOVOL:200V) + COOL:AIR) + FREQ:50HZ , (CAPPRM:ASME , CAPPRM:MHLW) + FREQ:60HZ + MOVOL:460V) + CAPPRE:IEC , ((MOVOL:230V , MOVOL:575V) + COOL:AIR , MOVOL:460V) + CAPPRE:ULCUL + CAPPRM:ASME + FREQ:60HZ) **(25/02/2019 - 16/12/2019)** ((((CAPPRM:AS1210 , CAPPRM:CE , CAPPRM:MHLW , CAPPRM:MOM) + MOVOL:400V , CAPPRM:CE + MOVOL:500V , CAPPRM:MHLW + MOVOL:200V) + FREQ:50HZ , (CAPPRM:ASME , CAPPRM:MHLW) + FREQ:60HZ + MOVOL:460V) + CAPPRE:IEC , (MOVOL:230V , MOVOL:460V , MOVOL:575V) + CAPPRE:ULCUL + CAPPRM:ASME + FREQ:60HZ) + COOL:AIR	
	Electrical legend:	Mounting plate			
	1649 8002 39	1	WIRE HARNESS	**(12/12/2018 - 24/02/2019)** ((((CAPPRM:AS1210 , CAPPRM:CE , CAPPRM:MHLW , CAPPRM:MOM) + MOVOL:400V , (CAPPRM:CE + MOVOL:500V , CAPPRM:MHLW + MOVOL:200V) + COOL:AIR) + FREQ:50HZ , (CAPPRM:ASME , CAPPRM:MHLW) + FREQ:60HZ + MOVOL:460V) + CAPPRE:IEC , ((MOVOL:230V , MOVOL:575V) + COOL:AIR , MOVOL:460V) + CAPPRE:ULCUL + CAPPRM:ASME + FREQ:60HZ) **(25/02/2019 - 16/12/2019)** ((((CAPPRM:AS1210 , CAPPRM:CE , CAPPRM:MHLW , CAPPRM:MOM) + MOVOL:400V , CAPPRM:CE + MOVOL:500V , CAPPRM:MHLW + MOVOL:200V) + FREQ:50HZ , (CAPPRM:ASME , CAPPRM:MHLW) + FREQ:60HZ + MOVOL:460V) + CAPPRE:IEC , (MOVOL:230V , MOVOL:460V , MOVOL:575V) + CAPPRE:ULCUL + CAPPRM:ASME + FREQ:60HZ) + COOL:AIR	WH
	1649 8002 40	1	WIRE HARNESS	**(12/12/2018 - 24/02/2019)** ((((CAPPRM:AS1210 , CAPPRM:CE , CAPPRM:MHLW , CAPPRM:MOM) + MOVOL:400V , (CAPPRM:CE + MOVOL:500V , CAPPRM:MHLW + MOVOL:200V) + COOL:AIR) + FREQ:50HZ , (CAPPRM:ASME , CAPPRM:MHLW) + FREQ:60HZ + MOVOL:460V) + CAPPRE:IEC , ((MOVOL:230V , MOVOL:575V) + COOL:AIR , MOVOL:460V) + CAPPRE:ULCUL + CAPPRM:ASME + FREQ:60HZ) **(25/02/2019 - 16/12/2019)** ((((CAPPRM:AS1210 , CAPPRM:CE , CAPPRM:MHLW , CAPPRM:MOM) + MOVOL:400V , CAPPRM:CE + MOVOL:500V , CAPPRM:MHLW + MOVOL:200V) + FREQ:50HZ , (CAPPRM:ASME , CAPPRM:MHLW) + FREQ:60HZ + MOVOL:460V) + CAPPRE:IEC , (MOVOL:230V , MOVOL:460V , MOVOL:575V) + CAPPRE:ULCUL + CAPPRM:ASME + FREQ:60HZ) + COOL:AIR	WH

Legend:

CAPPRE:IEC - Component approval electrical:IEC
CAPPRE:ULCUL - Component approval electrical:UL/cUL
CAPPRM:AS1210 - Component approval mechanical:AS1210
CAPPRM:ASME - Component approval mechanical:ASME
CAPPRM:CE - Component approval mechanical:CE
CAPPRM:MHLW - Component approval mechanical:MHLW
CAPPRM:MOM - Component approval mechanical:MOM
COOL:AIR - Cooling:Air cooled
FREQ:50HZ - Frequency:50 Hz
FREQ:60HZ - Frequency:60 Hz
IDRY:Y - Integrated dryer:Yes
MODEL:GA90VP_16 - Model:GA 90VSD+
MOVOL:200V - Supply voltage:200 V
MOVOL:230V - Supply voltage:230 V
MOVOL:400V - Supply voltage:400 V
MOVOL:460V - Supply voltage:460 V
MOVOL:500V - Supply voltage:500 V
MOVOL:575V - Supply voltage:575 V

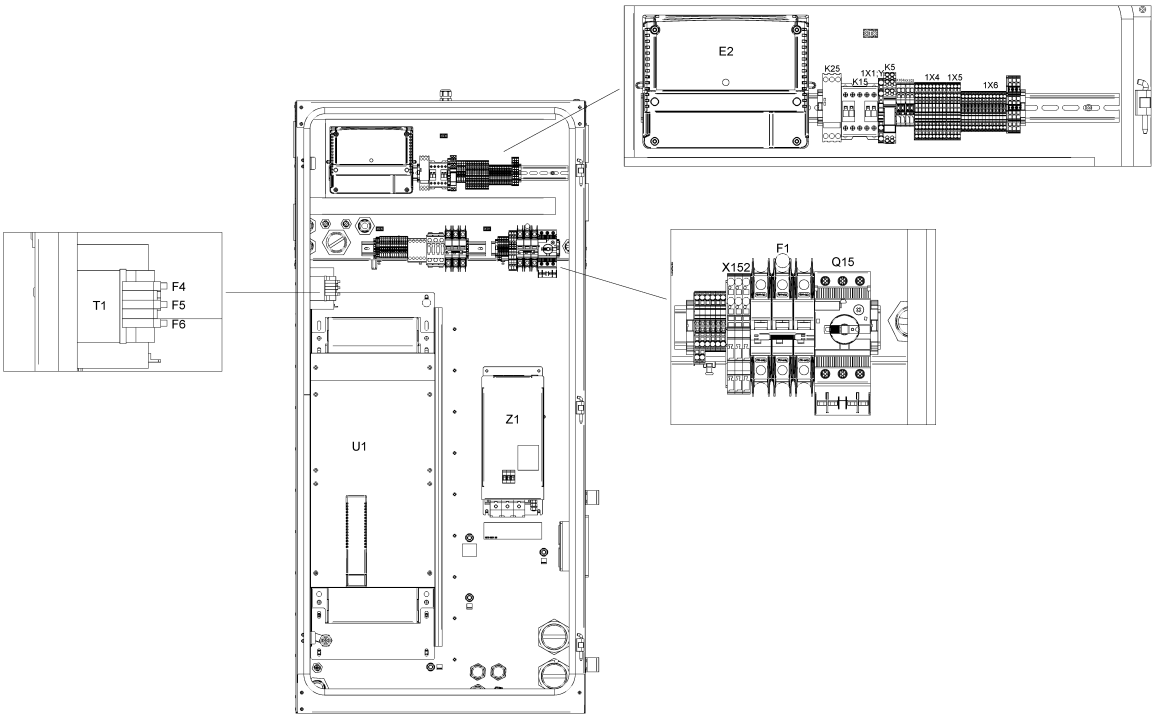
E2
K25
K15
1X1
K5
1X4
1X5
1X6
T1
F4
F5
F6
X152
F1
Q15
U1
Z1

21.18 - Cubicle components GA 90 VSD+ - (200V-400V-500V/50Hz, 460V/60Hz - IEC, 230V-460V-575V/60Hz - UL-cUL) - Full-Feature (12/12/2018 - 16/12/2019)

(((MOVOL:200V , MOVOL:400V , MOVOL:500V) + FREQ:50HZ , FREQ:60HZ + MOVOL:460V) + CAPPRE:IEC , (MOVOL:230V , MOVOL:460V , MOVOL:575V) + CAPPRE:ULCUL + FREQ:60HZ) + IDRY:Y + MODEL:GA90VP_16

Ref	Part Number	Qty	Name	Validity	EL
	1649 8002 72	1	CABLE POWER	**(12/12/2018 - 24/02/2019)** ((((CAPPRM:AS1210 , CAPPRM:CE , CAPPRM:MHLW , CAPPRM:MOM) + MOVOL:400V , (CAPPRM:CE + MOVOL:500V , CAPPRM:MHLW + MOVOL:200V) + COOL:AIR) + FREQ:50HZ , (CAPPRM:ASME , CAPPRM:MHLW) + FREQ:60HZ + MOVOL:460V) + CAPPRE:IEC , ((MOVOL:230V , MOVOL:575V) + COOL:AIR , MOVOL:460V) + CAPPRE:ULCUL + CAPPRM:ASME + FREQ:60HZ) **(25/02/2019 - 16/12/2019)** ((((CAPPRM:AS1210 , CAPPRM:CE , CAPPRM:MHLW , CAPPRM:MOM) + MOVOL:400V , CAPPRM:CE + MOVOL:500V , CAPPRM:MHLW + MOVOL:200V) + FREQ:50HZ , (CAPPRM:ASME , CAPPRM:MHLW) + FREQ:60HZ + MOVOL:460V) + CAPPRE:IEC , (MOVOL:230V , MOVOL:460V , MOVOL:575V) + CAPPRE:ULCUL + CAPPRM:ASME + FREQ:60HZ) + COOL:AIR	
	Electrical legend:	Full feature (FF) Drain			
	1649 8002 73	1	WIRE HARNESS	**(12/12/2018 - 24/02/2019)** ((((CAPPRM:AS1210 , CAPPRM:CE , CAPPRM:MHLW , CAPPRM:MOM) + MOVOL:400V , (CAPPRM:CE + MOVOL:500V , CAPPRM:MHLW + MOVOL:200V) + COOL:AIR) + FREQ:50HZ , (CAPPRM:ASME , CAPPRM:MHLW) + FREQ:60HZ + MOVOL:460V) + CAPPRE:IEC , ((MOVOL:230V , MOVOL:575V) + COOL:AIR , MOVOL:460V) + CAPPRE:ULCUL + CAPPRM:ASME + FREQ:60HZ) **(25/02/2019 - 16/12/2019)** ((((CAPPRM:AS1210 , CAPPRM:CE , CAPPRM:MHLW , CAPPRM:MOM) + MOVOL:400V , CAPPRM:CE + MOVOL:500V , CAPPRM:MHLW + MOVOL:200V) + FREQ:50HZ , (CAPPRM:ASME , CAPPRM:MHLW) + FREQ:60HZ + MOVOL:460V) + CAPPRE:IEC , (MOVOL:230V , MOVOL:460V , MOVOL:575V) + CAPPRE:ULCUL + CAPPRM:ASME + FREQ:60HZ) + COOL:AIR	
	Electrical legend:	Pack Drain + Air filter switch			
	1649 8002 75	1	WIRE HARNESS	**(12/12/2018 - 24/02/2019)** ((((CAPPRM:AS1210 , CAPPRM:CE , CAPPRM:MHLW , CAPPRM:MOM) + MOVOL:400V , (CAPPRM:CE + MOVOL:500V , CAPPRM:MHLW + MOVOL:200V) + COOL:AIR) + FREQ:50HZ , (CAPPRM:ASME , CAPPRM:MHLW) + FREQ:60HZ + MOVOL:460V) + CAPPRE:IEC , ((MOVOL:230V , MOVOL:575V) + COOL:AIR , MOVOL:460V) + CAPPRE:ULCUL + CAPPRM:ASME + FREQ:60HZ) **(25/02/2019 - 16/12/2019)** ((((CAPPRM:AS1210 , CAPPRM:CE , CAPPRM:MHLW , CAPPRM:MOM) + MOVOL:400V , CAPPRM:CE + MOVOL:500V , CAPPRM:MHLW + MOVOL:200V) + FREQ:50HZ , (CAPPRM:ASME , CAPPRM:MHLW) + FREQ:60HZ + MOVOL:460V) + CAPPRE:IEC , (MOVOL:230V , MOVOL:460V , MOVOL:575V) + CAPPRE:ULCUL + CAPPRM:ASME + FREQ:60HZ) + COOL:AIR	
	Electrical legend:	Relative Humidity sensor			

Legend:

CAPPRE:IEC - Component approval electrical:IEC	CAPPRE:ULCUL - Component approval electrical:UL/cUL	CAPPRM:AS1210 - Component approval mechanical:AS1210
CAPPRM:ASME - Component approval mechanical:ASME	CAPPRM:CE - Component approval mechanical:CE	CAPPRM:MHLW - Component approval mechanical:MHLW
CAPPRM:MOM - Component approval mechanical:MOM	COOL:AIR - Cooling:Air cooled	FREQ:50HZ - Frequency:50 Hz
FREQ:60HZ - Frequency:60 Hz	IDRY:Y - Integrated dryer:Yes	MODEL:GA90VP_16 - Model:GA 90VSD+
MOVOL:200V - Supply voltage:200 V	MOVOL:230V - Supply voltage:230 V	MOVOL:400V - Supply voltage:400 V
MOVOL:460V - Supply voltage:460 V	MOVOL:500V - Supply voltage:500 V	MOVOL:575V - Supply voltage:575 V

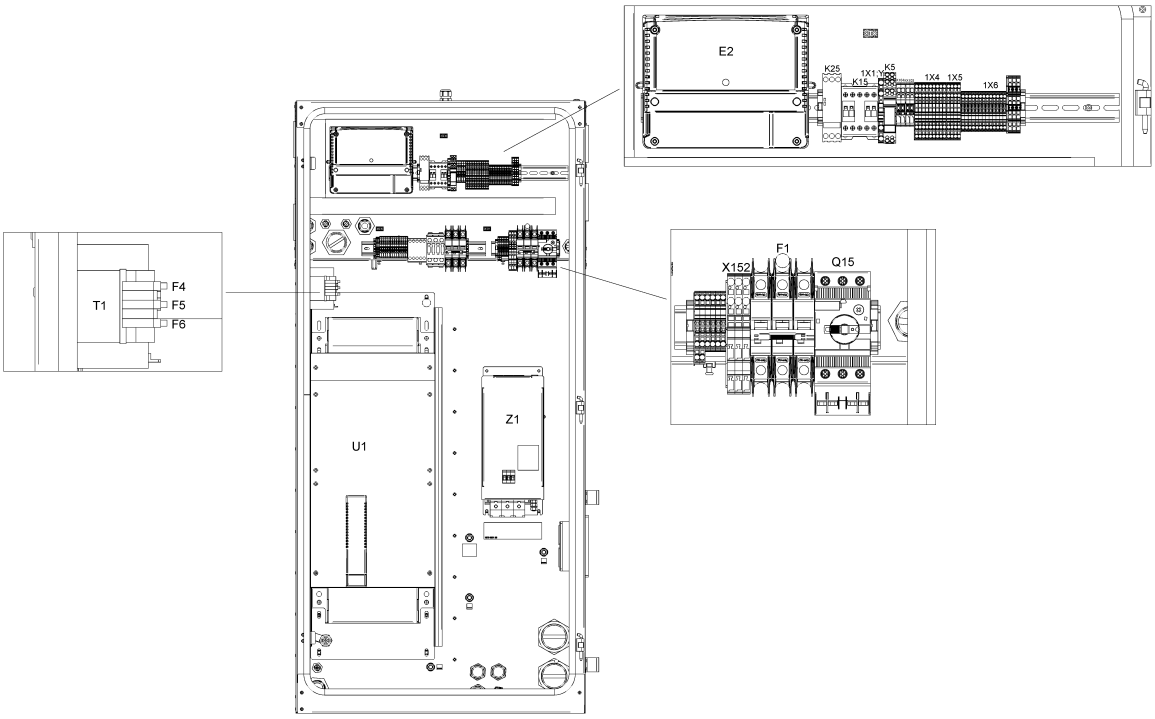
E2
K25
K15
1X1
K5
1X4
1X5
1X6
T1
F4
F5
F6
X152
F1
Q15
U1
Z1

21.18 - Cubicle components GA 90 VSD+ - (200V-400V-500V/50Hz, 460V/60Hz - IEC, 230V-460V-575V/60Hz - UL-cUL) - Full-Feature (12/12/2018 - 16/12/2019)

(((MOVOL:200V , MOVOL:400V , MOVOL:500V) + FREQ:50HZ , FREQ:60HZ + MOVOL:460V) + CAPPRE:IEC , (MOVOL:230V , MOVOL:460V , MOVOL:575V) + CAPPRE:ULCUL + FREQ:60HZ) + IDRY:Y + MODEL:GA90VP_16

Ref	Part Number	Qty	Name	Validity	EL
	1649 8001 44	3	MOTOR CABLE	**(12/12/2018 - 24/02/2019)** ((((CAPPRM:AS1210 , CAPPRM:CE , CAPPRM:MHLW , CAPPRM:MOM) + MOVOL:400V , (CAPPRM:CE + MOVOL:500V , CAPPRM:MHLW + MOVOL:200V) + COOL:AIR) + FREQ:50HZ , (CAPPRM:ASME , CAPPRM:MHLW) + FREQ:60HZ + MOVOL:460V) + CAPPRE:IEC , ((MOVOL:230V , MOVOL:575V) + COOL:AIR , MOVOL:460V) + CAPPRE:ULCUL + CAPPRM:ASME + FREQ:60HZ) **(25/02/2019 - 16/12/2019)** ((((CAPPRM:AS1210 , CAPPRM:CE , CAPPRM:MHLW , CAPPRM:MOM) + MOVOL:400V , CAPPRM:CE + MOVOL:500V , CAPPRM:MHLW + MOVOL:200V) + FREQ:50HZ , (CAPPRM:ASME , CAPPRM:MHLW) + FREQ:60HZ + MOVOL:460V) + CAPPRE:IEC , (MOVOL:230V , MOVOL:460V , MOVOL:575V) + CAPPRE:ULCUL + CAPPRM:ASME + FREQ:60HZ) + COOL:AIR	
	Electrical legend:	Motor conduit			
	1649 8001 47	1	MOTOR CABLE	**(12/12/2018 - 24/02/2019)** ((((CAPPRM:AS1210 , CAPPRM:CE , CAPPRM:MHLW , CAPPRM:MOM) + MOVOL:400V , (CAPPRM:CE + MOVOL:500V , CAPPRM:MHLW + MOVOL:200V) + COOL:AIR) + FREQ:50HZ , (CAPPRM:ASME , CAPPRM:MHLW) + FREQ:60HZ + MOVOL:460V) + CAPPRE:IEC , ((MOVOL:230V , MOVOL:575V) + COOL:AIR , MOVOL:460V) + CAPPRE:ULCUL + CAPPRM:ASME + FREQ:60HZ) **(25/02/2019 - 16/12/2019)** ((((CAPPRM:AS1210 , CAPPRM:CE , CAPPRM:MHLW , CAPPRM:MOM) + MOVOL:400V , CAPPRM:CE + MOVOL:500V , CAPPRM:MHLW + MOVOL:200V) + FREQ:50HZ , (CAPPRM:ASME , CAPPRM:MHLW) + FREQ:60HZ + MOVOL:460V) + CAPPRE:IEC , (MOVOL:230V , MOVOL:460V , MOVOL:575V) + CAPPRE:ULCUL + CAPPRM:ASME + FREQ:60HZ) + COOL:AIR	
	Electrical legend:	Motor conduit			
		1	DATA LABEL	**(12/12/2018 - 24/02/2019)** ((((CAPPRM:AS1210 , CAPPRM:CE , CAPPRM:MHLW , CAPPRM:MOM) + MOVOL:400V , (CAPPRM:CE + MOVOL:500V , CAPPRM:MHLW + MOVOL:200V) + COOL:AIR) + FREQ:50HZ , (CAPPRM:ASME , CAPPRM:MHLW) + FREQ:60HZ + MOVOL:460V) + CAPPRE:IEC , ((MOVOL:230V , MOVOL:575V) + COOL:AIR , MOVOL:460V) + CAPPRE:ULCUL + CAPPRM:ASME + FREQ:60HZ) **(25/02/2019 - 16/12/2019)** ((((CAPPRM:AS1210 , CAPPRM:CE , CAPPRM:MHLW , CAPPRM:MOM) + MOVOL:400V , CAPPRM:CE + MOVOL:500V , CAPPRM:MHLW + MOVOL:200V) + FREQ:50HZ , (CAPPRM:ASME , CAPPRM:MHLW) + FREQ:60HZ + MOVOL:460V) + CAPPRE:IEC , (MOVOL:230V , MOVOL:460V , MOVOL:575V) + CAPPRE:ULCUL + CAPPRM:ASME + FREQ:60HZ) + COOL:AIR	Label

Legend:

CAPPRE:IEC - Component approval electrical:IEC
CAPPRE:ULCUL - Component approval electrical:UL/cUL
CAPPRM:AS1210 - Component approval mechanical:AS1210
CAPPRM:ASME - Component approval mechanical:ASME
CAPPRM:CE - Component approval mechanical:CE
CAPPRM:MHLW - Component approval mechanical:MHLW
CAPPRM:MOM - Component approval mechanical:MOM
COOL:AIR - Cooling:Air cooled
FREQ:50HZ - Frequency:50 Hz
FREQ:60HZ - Frequency:60 Hz
IDRY:Y - Integrated dryer:Yes
MODEL:GA90VP_16 - Model:GA 90VSD+
MOVOL:200V - Supply voltage:200 V
MOVOL:230V - Supply voltage:230 V
MOVOL:400V - Supply voltage:400 V
MOVOL:460V - Supply voltage:460 V
MOVOL:500V - Supply voltage:500 V
MOVOL:575V - Supply voltage:575 V

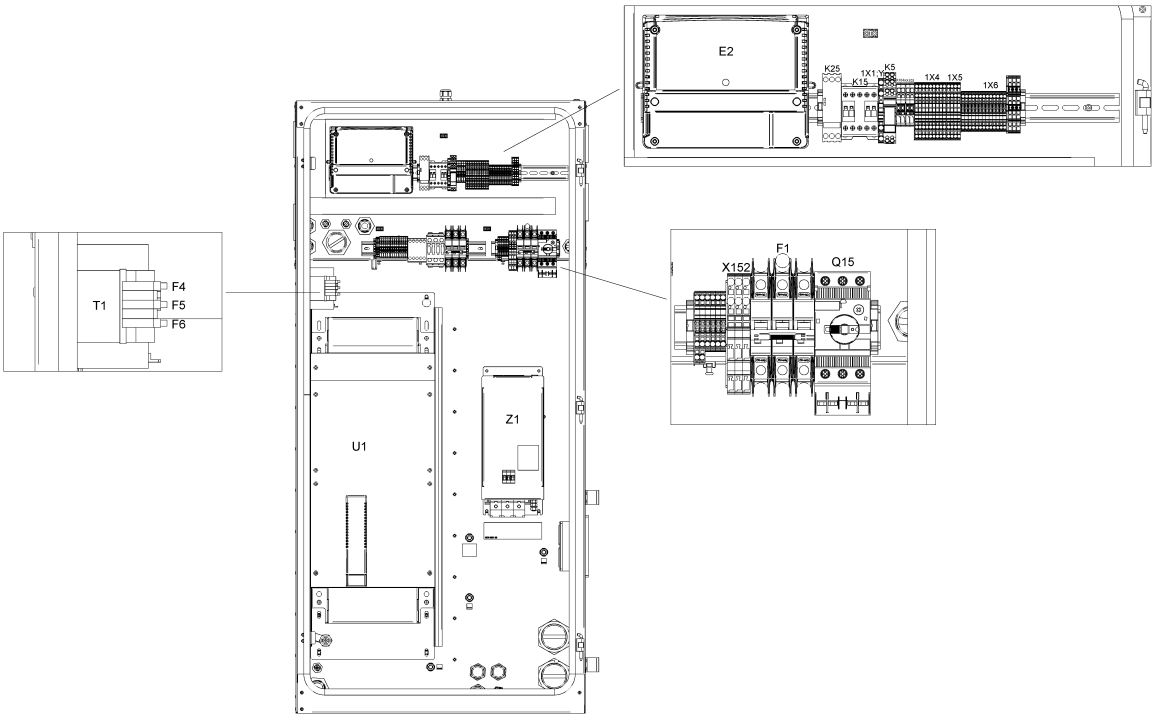
E2
K25
K15
1X1
K5
1X4
1X5
1X6
T1
F4
F5
F6
X152
F1
Q15
U1
Z1

21.18 - Cubicle components GA 90 VSD+ - (200V-400V-500V/50Hz, 460V/60Hz - IEC, 230V-460V-575V/60Hz - UL-cUL) - Full-Feature (12/12/2018 - 16/12/2019)

(((MOVOL:200V , MOVOL:400V , MOVOL:500V) + FREQ:50HZ , FREQ:60HZ + MOVOL:460V) + CAPPRE:IEC , (MOVOL:230V , MOVOL:460V , MOVOL:575V) + CAPPRE:ULCUL + FREQ:60HZ) + IDRY:Y + MODEL:GA90VP_16

Ref	Part Number	Qty	Name	Validity	EL
	1079 9901 68	1	WARNING LABEL	**(12/12/2018 - 24/02/2019)** ((((CAPPRM:AS1210 , CAPPRM:CE , CAPPRM:MHLW , CAPPRM:MOM) + MOVOL:400V , (CAPPRM:CE + MOVOL:500V , CAPPRM:MHLW + MOVOL:200V) + COOL:AIR) + FREQ:50HZ , (CAPPRM:ASME , CAPPRM:MHLW) + FREQ:60HZ + MOVOL:460V) + CAPPRE:IEC , ((MOVOL:230V , MOVOL:575V) + COOL:AIR , MOVOL:460V) + CAPPRE:ULCUL + CAPPRM:ASME + FREQ:60HZ) **(25/02/2019 - 16/12/2019)** ((((CAPPRM:AS1210 , CAPPRM:CE , CAPPRM:MHLW , CAPPRM:MOM) + MOVOL:400V , CAPPRM:CE + MOVOL:500V , CAPPRM:MHLW + MOVOL:200V) + FREQ:50HZ , (CAPPRM:ASME , CAPPRM:MHLW) + FREQ:60HZ + MOVOL:460V) + CAPPRE:IEC , (MOVOL:230V , MOVOL:460V , MOVOL:575V) + CAPPRE:ULCUL + CAPPRM:ASME + FREQ:60HZ) + COOL:AIR	Label
	1900 5350 14	1	INVERTER	**(12/12/2018 - 24/02/2019)** ((((CAPPRM:AS1210 , CAPPRM:CE , CAPPRM:MHLW , CAPPRM:MOM) + MOVOL:400V , (CAPPRM:CE + MOVOL:500V , CAPPRM:MHLW + MOVOL:200V) + COOL:AIR) + FREQ:50HZ , (CAPPRM:ASME , CAPPRM:MHLW) + FREQ:60HZ + MOVOL:460V) + CAPPRE:IEC , ((MOVOL:230V , MOVOL:575V) + COOL:AIR , MOVOL:460V) + CAPPRE:ULCUL + CAPPRM:ASME + FREQ:60HZ) **(25/02/2019 - 16/12/2019)** ((((CAPPRM:AS1210 , CAPPRM:CE , CAPPRM:MHLW , CAPPRM:MOM) + MOVOL:400V , CAPPRM:CE + MOVOL:500V , CAPPRM:MHLW + MOVOL:200V) + FREQ:50HZ , (CAPPRM:ASME , CAPPRM:MHLW) + FREQ:60HZ + MOVOL:460V) + CAPPRE:IEC , (MOVOL:230V , MOVOL:460V , MOVOL:575V) + CAPPRE:ULCUL + CAPPRM:ASME + FREQ:60HZ) + COOL:AIR	U1
	1631 2079 00	1	NANOPERMRING	**(12/12/2018 - 24/02/2019)** ((((CAPPRM:AS1210 , CAPPRM:CE , CAPPRM:MHLW , CAPPRM:MOM) + MOVOL:400V , (CAPPRM:CE + MOVOL:500V , CAPPRM:MHLW + MOVOL:200V) + COOL:AIR) + FREQ:50HZ , (CAPPRM:ASME , CAPPRM:MHLW) + FREQ:60HZ + MOVOL:460V) + CAPPRE:IEC , ((MOVOL:230V , MOVOL:575V) + COOL:AIR , MOVOL:460V) + CAPPRE:ULCUL + CAPPRM:ASME + FREQ:60HZ) **(25/02/2019 - 16/12/2019)** ((((CAPPRM:AS1210 , CAPPRM:CE , CAPPRM:MHLW , CAPPRM:MOM) + MOVOL:400V , CAPPRM:CE + MOVOL:500V , CAPPRM:MHLW + MOVOL:200V) + FREQ:50HZ , (CAPPRM:ASME , CAPPRM:MHLW) + FREQ:60HZ + MOVOL:460V) + CAPPRE:IEC , (MOVOL:230V , MOVOL:460V , MOVOL:575V) + CAPPRE:ULCUL + CAPPRM:ASME + FREQ:60HZ) + COOL:AIR	

Electrical legend: Nanoperm ring

Legend:

CAPPRE:IEC - Component approval electrical:IEC	CAPPRE:ULCUL - Component approval electrical:UL/cUL	CAPPRM:AS1210 - Component approval mechanical:AS1210
CAPPRM:ASME - Component approval mechanical:ASME	CAPPRM:CE - Component approval mechanical:CE	CAPPRM:MHLW - Component approval mechanical:MHLW
CAPPRM:MOM - Component approval mechanical:MOM	COOL:AIR - Cooling:Air cooled	FREQ:50HZ - Frequency:50 Hz
FREQ:60HZ - Frequency:60 Hz	IDRY:Y - Integrated dryer:Yes	MODEL:GA90VP_16 - Model:GA 90VSD+
MOVOL:200V - Supply voltage:200 V	MOVOL:230V - Supply voltage:230 V	MOVOL:400V - Supply voltage:400 V
MOVOL:460V - Supply voltage:460 V	MOVOL:500V - Supply voltage:500 V	MOVOL:575V - Supply voltage:575 V

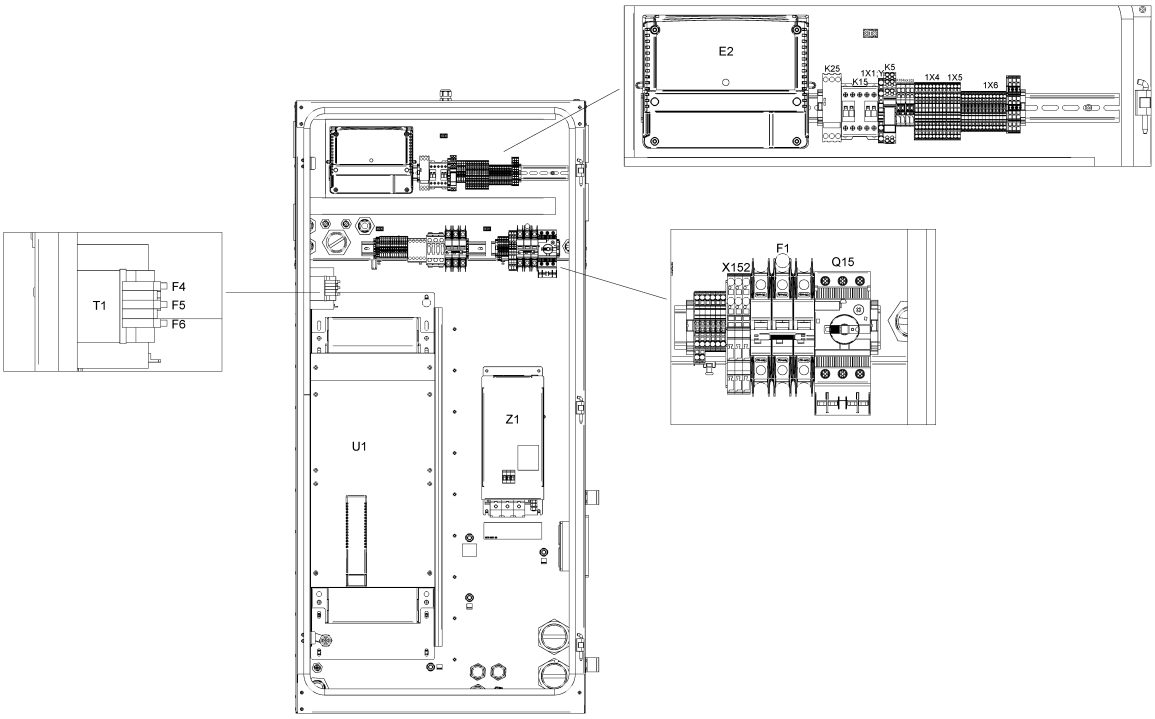
E2
K25
K15
1X1
K5
1X4
1X5
1X6
T1
F4
F5
F6
X152
F1
Q15
U1
Z1

21.18 - Cubicle components GA 90 VSD+ - (200V-400V-500V/50Hz, 460V/60Hz - IEC, 230V-460V-575V/60Hz - UL-cUL) - Full-Feature (12/12/2018 - 16/12/2019)

(((MOVOL:200V , MOVOL:400V , MOVOL:500V) + FREQ:50HZ , FREQ:60HZ + MOVOL:460V) + CAPPRE:IEC , (MOVOL:230V , MOVOL:460V , MOVOL:575V) + CAPPRE:ULCUL + FREQ:60HZ) + IDRY:Y + MODEL:GA90VP_16

Ref	Part Number	Qty	Name	Validity	EL
	0697 9811 17	2	PLUG	**(12/12/2018 - 24/02/2019)** ((((CAPPRM:AS1210 , CAPPRM:CE , CAPPRM:MHLW , CAPPRM:MOM) + MOVOL:400V , (CAPPRM:CE + MOVOL:500V , CAPPRM:MHLW + MOVOL:200V) + COOL:AIR) + FREQ:50HZ , (CAPPRM:ASME , CAPPRM:MHLW) + FREQ:60HZ + MOVOL:460V) + CAPPRE:IEC , ((MOVOL:230V , MOVOL:575V) + COOL:AIR , MOVOL:460V) + CAPPRE:ULCUL + CAPPRM:ASME + FREQ:60HZ) **(25/02/2019 - 16/12/2019)** ((((CAPPRM:AS1210 , CAPPRM:CE , CAPPRM:MHLW , CAPPRM:MOM) + MOVOL:400V , CAPPRM:CE + MOVOL:500V , CAPPRM:MHLW + MOVOL:200V) + FREQ:50HZ , (CAPPRM:ASME , CAPPRM:MHLW) + FREQ:60HZ + MOVOL:460V) + CAPPRE:IEC , (MOVOL:230V , MOVOL:460V , MOVOL:575V) + CAPPRE:ULCUL + CAPPRM:ASME + FREQ:60HZ) + COOL:AIR	
	Electrical legend:	Plug for transfo supply			
	0989 3700 48	2	NUT	**(12/12/2018 - 24/02/2019)** ((((CAPPRM:AS1210 , CAPPRM:CE , CAPPRM:MHLW , CAPPRM:MOM) + MOVOL:400V , (CAPPRM:CE + MOVOL:500V , CAPPRM:MHLW + MOVOL:200V) + COOL:AIR) + FREQ:50HZ , (CAPPRM:ASME , CAPPRM:MHLW) + FREQ:60HZ + MOVOL:460V) + CAPPRE:IEC , ((MOVOL:230V , MOVOL:575V) + COOL:AIR , MOVOL:460V) + CAPPRE:ULCUL + CAPPRM:ASME + FREQ:60HZ) **(25/02/2019 - 16/12/2019)** ((((CAPPRM:AS1210 , CAPPRM:CE , CAPPRM:MHLW , CAPPRM:MOM) + MOVOL:400V , CAPPRM:CE + MOVOL:500V , CAPPRM:MHLW + MOVOL:200V) + FREQ:50HZ , (CAPPRM:ASME , CAPPRM:MHLW) + FREQ:60HZ + MOVOL:460V) + CAPPRE:IEC , (MOVOL:230V , MOVOL:460V , MOVOL:575V) + CAPPRE:ULCUL + CAPPRM:ASME + FREQ:60HZ) + COOL:AIR	
	Electrical legend:	Nut for transfo supply			
	0698 5140 72	1	CABLE GLAND	**(12/12/2018 - 24/02/2019)** ((((CAPPRM:AS1210 , CAPPRM:CE , CAPPRM:MHLW , CAPPRM:MOM) + MOVOL:400V , (CAPPRM:CE + MOVOL:500V , CAPPRM:MHLW + MOVOL:200V) + COOL:AIR) + FREQ:50HZ , (CAPPRM:ASME , CAPPRM:MHLW) + FREQ:60HZ + MOVOL:460V) + CAPPRE:IEC , ((MOVOL:230V , MOVOL:575V) + COOL:AIR , MOVOL:460V) + CAPPRE:ULCUL + CAPPRM:ASME + FREQ:60HZ) **(25/02/2019 - 16/12/2019)** ((((CAPPRM:AS1210 , CAPPRM:CE , CAPPRM:MHLW , CAPPRM:MOM) + MOVOL:400V , CAPPRM:CE + MOVOL:500V , CAPPRM:MHLW + MOVOL:200V) + FREQ:50HZ , (CAPPRM:ASME , CAPPRM:MHLW) + FREQ:60HZ + MOVOL:460V) + CAPPRE:IEC , (MOVOL:230V , MOVOL:460V , MOVOL:575V) + CAPPRE:ULCUL + CAPPRM:ASME + FREQ:60HZ) + COOL:AIR	Fan

Legend:

CAPPRE:IEC - Component approval electrical:IEC
CAPPRE:ULCUL - Component approval electrical:UL/cUL
CAPPRM:AS1210 - Component approval mechanical:AS1210
CAPPRM:ASME - Component approval mechanical:ASME
CAPPRM:CE - Component approval mechanical:CE
CAPPRM:MHLW - Component approval mechanical:MHLW
CAPPRM:MOM - Component approval mechanical:MOM
COOL:AIR - Cooling:Air cooled
FREQ:50HZ - Frequency:50 Hz
FREQ:60HZ - Frequency:60 Hz
IDRY:Y - Integrated dryer:Yes
MODEL:GA90VP_16 - Model:GA 90VSD+
MOVOL:200V - Supply voltage:200 V
MOVOL:230V - Supply voltage:230 V
MOVOL:400V - Supply voltage:400 V
MOVOL:460V - Supply voltage:460 V
MOVOL:500V - Supply voltage:500 V
MOVOL:575V - Supply voltage:575 V

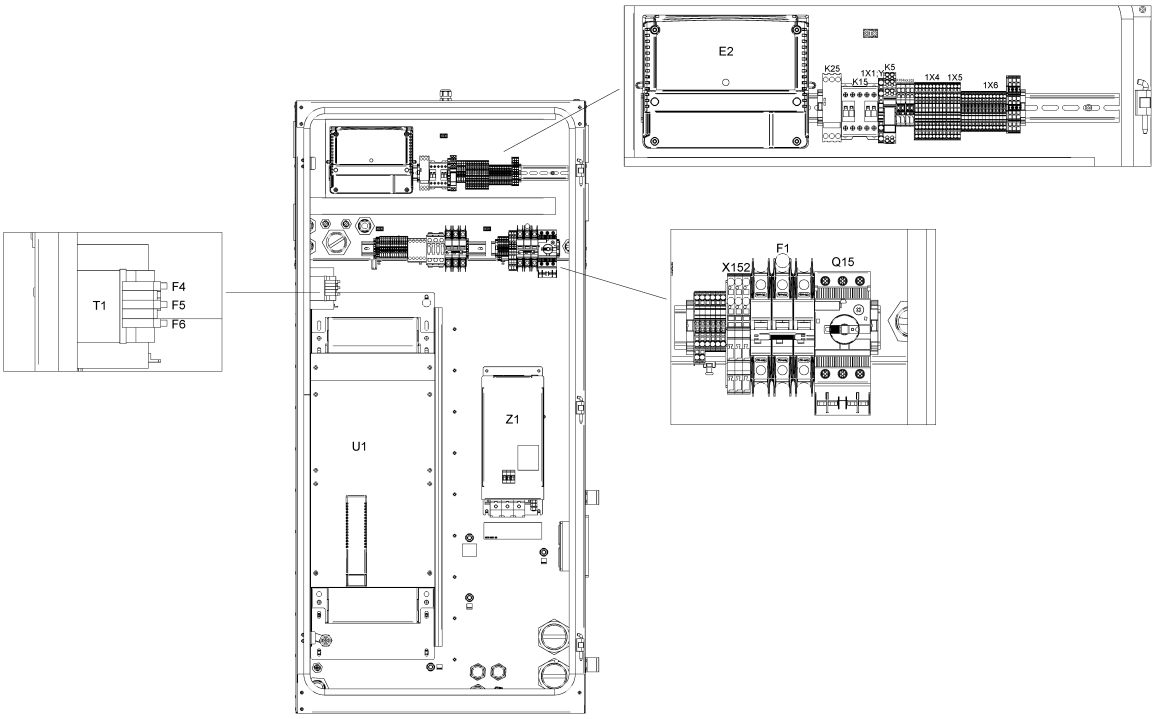
E2
K25
K15
1X1
K5
1X4
1X5
1X6
T1
F4
F5
F6
X152
F1
Q15
U1
Z1

21.18 - Cubicle components GA 90 VSD+ - (200V-400V-500V/50Hz, 460V/60Hz - IEC, 230V-460V-575V/60Hz - UL-cUL) - Full-Feature (12/12/2018 - 16/12/2019)

(((MOVOL:200V , MOVOL:400V , MOVOL:500V) + FREQ:50HZ , FREQ:60HZ + MOVOL:460V) + CAPPRE:IEC , (MOVOL:230V , MOVOL:460V , MOVOL:575V) + CAPPRE:ULCUL + FREQ:60HZ) + IDRY:Y + MODEL:GA90VP_16

Ref	Part Number	Qty	Name	Validity	EL
	0698 5140 71	1	CABLE GLAND	**(12/12/2018 - 24/02/2019)** ((((CAPPRM:AS1210 , CAPPRM:CE , CAPPRM:MHLW , CAPPRM:MOM) + MOVOL:400V , (CAPPRM:CE + MOVOL:500V , CAPPRM:MHLW + MOVOL:200V) + COOL:AIR) + FREQ:50HZ , (CAPPRM:ASME , CAPPRM:MHLW) + FREQ:60HZ + MOVOL:460V) + CAPPRE:IEC , ((MOVOL:230V , MOVOL:575V) + COOL:AIR , MOVOL:460V) + CAPPRE:ULCUL + CAPPRM:ASME + FREQ:60HZ) **(25/02/2019 - 16/12/2019)** ((((CAPPRM:AS1210 , CAPPRM:CE , CAPPRM:MHLW , CAPPRM:MOM) + MOVOL:400V , CAPPRM:CE + MOVOL:500V , CAPPRM:MHLW + MOVOL:200V) + FREQ:50HZ , (CAPPRM:ASME , CAPPRM:MHLW) + FREQ:60HZ + MOVOL:460V) + CAPPRE:IEC , (MOVOL:230V , MOVOL:460V , MOVOL:575V) + CAPPRE:ULCUL + CAPPRM:ASME + FREQ:60HZ) + COOL:AIR	
	Electrical legend:	Ambient sensor			
	0697 9809 20	1	LOCKNUT	**(12/12/2018 - 24/02/2019)** ((((CAPPRM:AS1210 , CAPPRM:CE , CAPPRM:MHLW , CAPPRM:MOM) + MOVOL:400V , (CAPPRM:CE + MOVOL:500V , CAPPRM:MHLW + MOVOL:200V) + COOL:AIR) + FREQ:50HZ , (CAPPRM:ASME , CAPPRM:MHLW) + FREQ:60HZ + MOVOL:460V) + CAPPRE:IEC , ((MOVOL:230V , MOVOL:575V) + COOL:AIR , MOVOL:460V) + CAPPRE:ULCUL + CAPPRM:ASME + FREQ:60HZ) **(25/02/2019 - 16/12/2019)** ((((CAPPRM:AS1210 , CAPPRM:CE , CAPPRM:MHLW , CAPPRM:MOM) + MOVOL:400V , CAPPRM:CE + MOVOL:500V , CAPPRM:MHLW + MOVOL:200V) + FREQ:50HZ , (CAPPRM:ASME , CAPPRM:MHLW) + FREQ:60HZ + MOVOL:460V) + CAPPRE:IEC , (MOVOL:230V , MOVOL:460V , MOVOL:575V) + CAPPRE:ULCUL + CAPPRM:ASME + FREQ:60HZ) + COOL:AIR	
	Electrical legend:	Ambient sensor			
	1089 9556 44	1	FAN WITH FILTER	**(12/12/2018 - 24/02/2019)** ((((CAPPRM:AS1210 , CAPPRM:CE , CAPPRM:MHLW , CAPPRM:MOM) + MOVOL:400V , (CAPPRM:CE + MOVOL:500V , CAPPRM:MHLW + MOVOL:200V) + COOL:AIR) + FREQ:50HZ , (CAPPRM:ASME , CAPPRM:MHLW) + FREQ:60HZ + MOVOL:460V) + CAPPRE:IEC , ((MOVOL:230V , MOVOL:575V) + COOL:AIR , MOVOL:460V) + CAPPRE:ULCUL + CAPPRM:ASME + FREQ:60HZ) **(25/02/2019 - 16/12/2019)** ((((CAPPRM:AS1210 , CAPPRM:CE , CAPPRM:MHLW , CAPPRM:MOM) + MOVOL:400V , CAPPRM:CE + MOVOL:500V , CAPPRM:MHLW + MOVOL:200V) + FREQ:50HZ , (CAPPRM:ASME , CAPPRM:MHLW) + FREQ:60HZ + MOVOL:460V) + CAPPRE:IEC , (MOVOL:230V , MOVOL:460V , MOVOL:575V) + CAPPRE:ULCUL + CAPPRM:ASME + FREQ:60HZ) + COOL:AIR	Cubicle fan

Legend:

CAPPRE:IEC - Component approval electrical:IEC	CAPPRE:ULCUL - Component approval electrical:UL/cUL	CAPPRM:AS1210 - Component approval mechanical:AS1210
CAPPRM:ASME - Component approval mechanical:ASME	CAPPRM:CE - Component approval mechanical:CE	CAPPRM:MHLW - Component approval mechanical:MHLW
CAPPRM:MOM - Component approval mechanical:MOM	COOL:AIR - Cooling:Air cooled	FREQ:50HZ - Frequency:50 Hz
FREQ:60HZ - Frequency:60 Hz	IDRY:Y - Integrated dryer:Yes	MODEL:GA90VP_16 - Model:GA 90VSD+
MOVOL:200V - Supply voltage:200 V	MOVOL:230V - Supply voltage:230 V	MOVOL:400V - Supply voltage:400 V
MOVOL:460V - Supply voltage:460 V	MOVOL:500V - Supply voltage:500 V	MOVOL:575V - Supply voltage:575 V

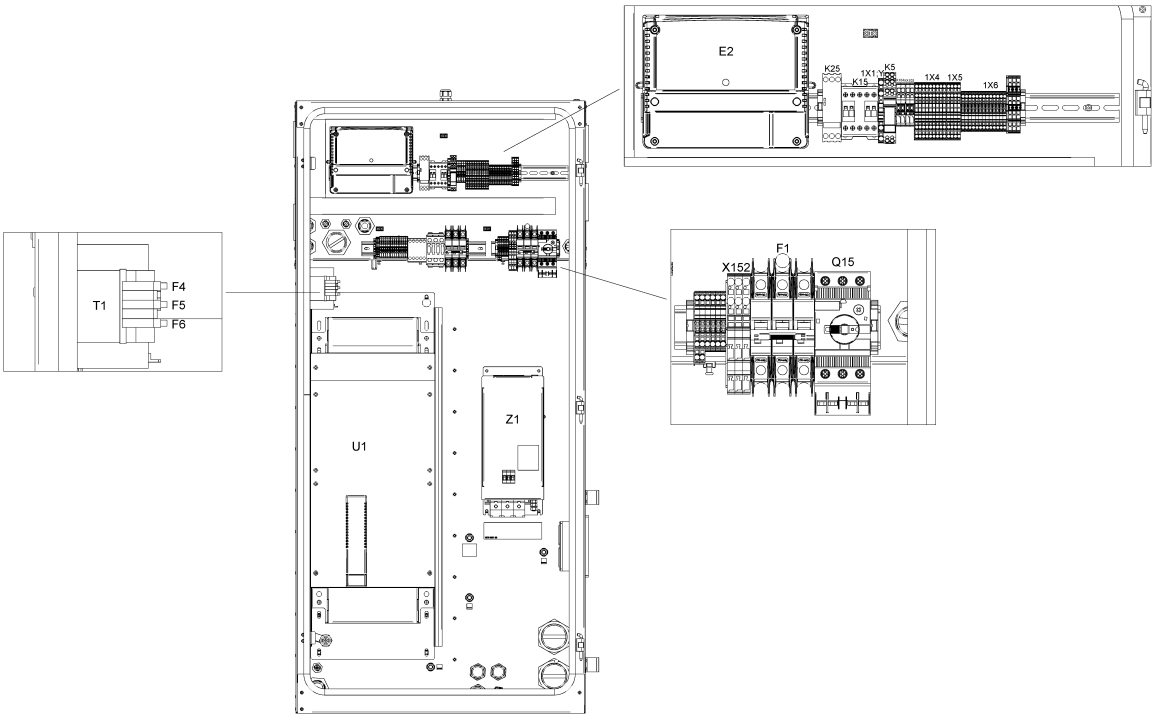
E2
K25
K15
1X1
K5
1X4
1X5
1X6
T1
F4
F5
F6
X152
F1
Q15
U1
Z1

21.18 - Cubicle components GA 90 VSD+ - (200V-400V-500V/50Hz, 460V/60Hz - IEC, 230V-460V-575V/60Hz - UL-cUL) - Full-Feature (12/12/2018 - 16/12/2019)

(((MOVOL:200V , MOVOL:400V , MOVOL:500V) + FREQ:50HZ , FREQ:60HZ + MOVOL:460V) + CAPPRE:IEC , (MOVOL:230V , MOVOL:460V , MOVOL:575V) + CAPPRE:ULCUL + FREQ:60HZ) + IDRY:Y + MODEL:GA90VP_16

Ref	Part Number	Qty	Name	Validity	EL
	1089 9556 72	4	AIR INLET WITHOUT FILTER	**(12/12/2018 - 24/02/2019)** ((((CAPPRM:AS1210 , CAPPRM:CE , CAPPRM:MHLW , CAPPRM:MOM) + MOVOL:400V , (CAPPRM:CE + MOVOL:500V , CAPPRM:MHLW + MOVOL:200V) + COOL:AIR) + FREQ:50HZ , (CAPPRM:ASME , CAPPRM:MHLW) + FREQ:60HZ + MOVOL:460V) + CAPPRE:IEC , ((MOVOL:230V , MOVOL:575V) + COOL:AIR , MOVOL:460V) + CAPPRE:ULCUL + CAPPRM:ASME + FREQ:60HZ) **(25/02/2019 - 16/12/2019)** ((((CAPPRM:AS1210 , CAPPRM:CE , CAPPRM:MHLW , CAPPRM:MOM) + MOVOL:400V , CAPPRM:CE + MOVOL:500V , CAPPRM:MHLW + MOVOL:200V) + FREQ:50HZ , (CAPPRM:ASME , CAPPRM:MHLW) + FREQ:60HZ + MOVOL:460V) + CAPPRE:IEC , (MOVOL:230V , MOVOL:460V , MOVOL:575V) + CAPPRE:ULCUL + CAPPRM:ASME + FREQ:60HZ) + COOL:AIR	Filter grid
	1088 0032 09	1	CONNECTOR	**(12/12/2018 - 24/02/2019)** ((((CAPPRM:AS1210 , CAPPRM:CE , CAPPRM:MHLW , CAPPRM:MOM) + MOVOL:400V , (CAPPRM:CE + MOVOL:500V , CAPPRM:MHLW + MOVOL:200V) + COOL:AIR) + FREQ:50HZ , (CAPPRM:ASME , CAPPRM:MHLW) + FREQ:60HZ + MOVOL:460V) + CAPPRE:IEC , ((MOVOL:230V , MOVOL:575V) + COOL:AIR , MOVOL:460V) + CAPPRE:ULCUL + CAPPRM:ASME + FREQ:60HZ) **(25/02/2019 - 16/12/2019)** ((((CAPPRM:AS1210 , CAPPRM:CE , CAPPRM:MHLW , CAPPRM:MOM) + MOVOL:400V , CAPPRM:CE + MOVOL:500V , CAPPRM:MHLW + MOVOL:200V) + FREQ:50HZ , (CAPPRM:ASME , CAPPRM:MHLW) + FREQ:60HZ + MOVOL:460V) + CAPPRE:IEC , (MOVOL:230V , MOVOL:460V , MOVOL:575V) + CAPPRE:ULCUL + CAPPRM:ASME + FREQ:60HZ) + COOL:AIR	X3
	1089 9572 06	1	LINE FILTER	**(12/12/2018 - 24/02/2019)** ((((CAPPRM:AS1210 , CAPPRM:CE , CAPPRM:MHLW , CAPPRM:MOM) + MOVOL:400V , (CAPPRM:CE + MOVOL:500V , CAPPRM:MHLW + MOVOL:200V) + COOL:AIR) + FREQ:50HZ , (CAPPRM:ASME , CAPPRM:MHLW) + FREQ:60HZ + MOVOL:460V) + CAPPRE:IEC , ((MOVOL:230V , MOVOL:575V) + COOL:AIR , MOVOL:460V) + CAPPRE:ULCUL + CAPPRM:ASME + FREQ:60HZ) **(25/02/2019 - 16/12/2019)** ((((CAPPRM:AS1210 , CAPPRM:CE , CAPPRM:MHLW , CAPPRM:MOM) + MOVOL:400V , CAPPRM:CE + MOVOL:500V , CAPPRM:MHLW + MOVOL:200V) + FREQ:50HZ , (CAPPRM:ASME , CAPPRM:MHLW) + FREQ:60HZ + MOVOL:460V) + CAPPRE:IEC , (MOVOL:230V , MOVOL:460V , MOVOL:575V) + CAPPRE:ULCUL + CAPPRM:ASME + FREQ:60HZ) + COOL:AIR	Z1 for 90kw
	1089 9562 04	1	STRAP	**(12/12/2018 - 24/02/2019)** ((((CAPPRM:AS1210 , CAPPRM:CE , CAPPRM:MHLW , CAPPRM:MOM) + MOVOL:400V , (CAPPRM:CE + MOVOL:500V , CAPPRM:MHLW + MOVOL:200V) + COOL:AIR) + FREQ:50HZ , (CAPPRM:ASME , CAPPRM:MHLW) + FREQ:60HZ + MOVOL:460V) + CAPPRE:IEC , ((MOVOL:230V , MOVOL:575V) + COOL:AIR , MOVOL:460V) + CAPPRE:ULCUL + CAPPRM:ASME + FREQ:60HZ) **(25/02/2019 - 16/12/2019)** ((((CAPPRM:AS1210 , CAPPRM:CE , CAPPRM:MHLW , CAPPRM:MOM) + MOVOL:400V , CAPPRM:CE + MOVOL:500V , CAPPRM:MHLW + MOVOL:200V) + FREQ:50HZ , (CAPPRM:ASME , CAPPRM:MHLW) + FREQ:60HZ + MOVOL:460V) + CAPPRE:IEC , (MOVOL:230V , MOVOL:460V , MOVOL:575V) + CAPPRE:ULCUL + CAPPRM:ASME + FREQ:60HZ) + COOL:AIR	HF-screen

Legend:

CAPPRE:IEC - Component approval electrical:IEC
CAPPRE:ULCUL - Component approval electrical:UL/cUL
CAPPRM:AS1210 - Component approval mechanical:AS1210
CAPPRM:ASME - Component approval mechanical:ASME
CAPPRM:CE - Component approval mechanical:CE
CAPPRM:MHLW - Component approval mechanical:MHLW
CAPPRM:MOM - Component approval mechanical:MOM
COOL:AIR - Cooling:Air cooled
FREQ:50HZ - Frequency:50 Hz
FREQ:60HZ - Frequency:60 Hz
IDRY:Y - Integrated dryer:Yes
MODEL:GA90VP_16 - Model:GA 90VSD+
MOVOL:200V - Supply voltage:200 V
MOVOL:230V - Supply voltage:230 V
MOVOL:400V - Supply voltage:400 V
MOVOL:460V - Supply voltage:460 V
MOVOL:500V - Supply voltage:500 V
MOVOL:575V - Supply voltage:575 V

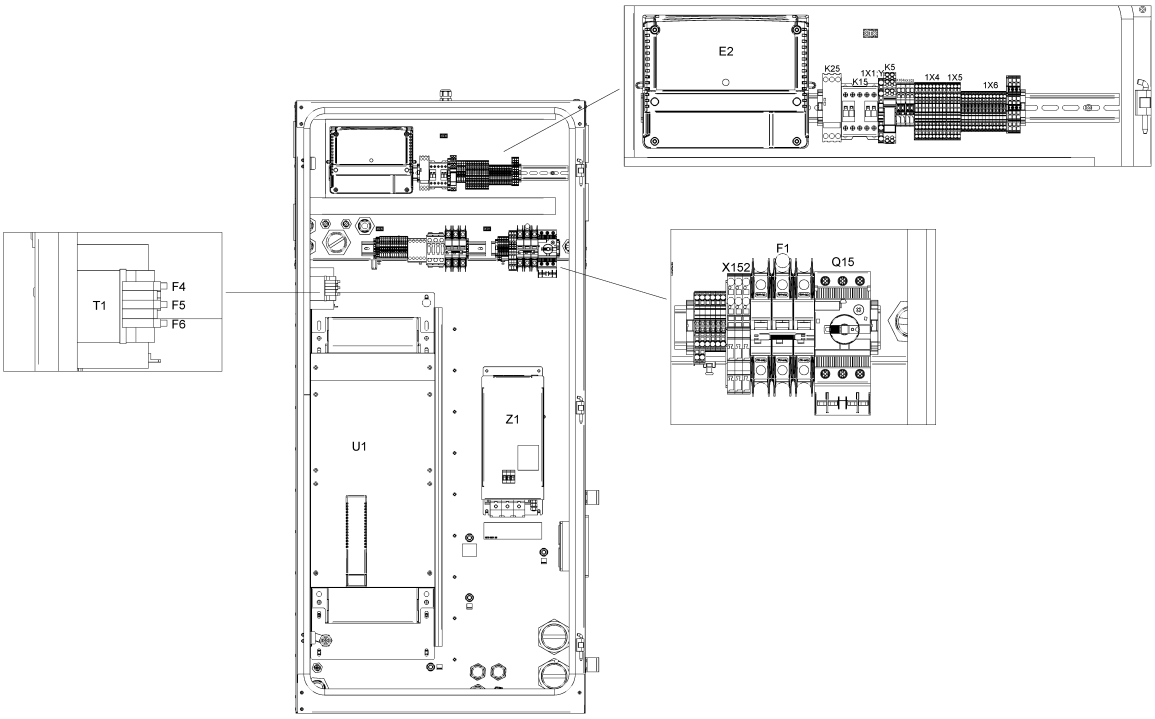
E2
K25
K15
1X1
K5
1X4
1X5
1X6
T1
F4
F5
F6
X152
F1
Q15
U1
Z1

21.18 - Cubicle components GA 90 VSD+ - (200V-400V-500V/50Hz, 460V/60Hz - IEC, 230V-460V-575V/60Hz - UL-cUL) - Full-Feature (12/12/2018 - 16/12/2019)

(((MOVOL:200V , MOVOL:400V , MOVOL:500V) + FREQ:50HZ , FREQ:60HZ + MOVOL:460V) + CAPPRE:IEC , (MOVOL:230V , MOVOL:460V , MOVOL:575V) + CAPPRE:ULCUL + FREQ:60HZ) + IDRY:Y + MODEL:GA90VP_16

Ref	Part Number	Qty	Name	Validity	EL
	1089 9514 56	1	TRANSFORMER	**(12/12/2018 - 24/02/2019)** ((((CAPPRM:AS1210 , CAPPRM:CE , CAPPRM:MHLW , CAPPRM:MOM) + MOVOL:400V , (CAPPRM:CE + MOVOL:500V , CAPPRM:MHLW + MOVOL:200V) + COOL:AIR) + FREQ:50HZ , (CAPPRM:ASME , CAPPRM:MHLW) + FREQ:60HZ + MOVOL:460V) + CAPPRE:IEC , ((MOVOL:230V , MOVOL:575V) + COOL:AIR , MOVOL:460V) + CAPPRE:ULCUL + CAPPRM:ASME + FREQ:60HZ) **(25/02/2019 - 16/12/2019)** ((((CAPPRM:AS1210 , CAPPRM:CE , CAPPRM:MHLW , CAPPRM:MOM) + MOVOL:400V , CAPPRM:CE + MOVOL:500V , CAPPRM:MHLW + MOVOL:200V) + FREQ:50HZ , (CAPPRM:ASME , CAPPRM:MHLW) + FREQ:60HZ + MOVOL:460V) + CAPPRE:IEC , (MOVOL:230V , MOVOL:460V , MOVOL:575V) + CAPPRE:ULCUL + CAPPRM:ASME + FREQ:60HZ) + COOL:AIR	T1
	1089 9522 26	1	CIRCUIT BREAKER	**(12/12/2018 - 24/02/2019)** ((((CAPPRM:AS1210 , CAPPRM:CE , CAPPRM:MHLW , CAPPRM:MOM) + MOVOL:400V , (CAPPRM:CE + MOVOL:500V , CAPPRM:MHLW + MOVOL:200V) + COOL:AIR) + FREQ:50HZ , (CAPPRM:ASME , CAPPRM:MHLW) + FREQ:60HZ + MOVOL:460V) + CAPPRE:IEC , ((MOVOL:230V , MOVOL:575V) + COOL:AIR , MOVOL:460V) + CAPPRE:ULCUL + CAPPRM:ASME + FREQ:60HZ) **(25/02/2019 - 16/12/2019)** ((((CAPPRM:AS1210 , CAPPRM:CE , CAPPRM:MHLW , CAPPRM:MOM) + MOVOL:400V , CAPPRM:CE + MOVOL:500V , CAPPRM:MHLW + MOVOL:200V) + FREQ:50HZ , (CAPPRM:ASME , CAPPRM:MHLW) + FREQ:60HZ + MOVOL:460V) + CAPPRE:IEC , (MOVOL:230V , MOVOL:460V , MOVOL:575V) + CAPPRE:ULCUL + CAPPRM:ASME + FREQ:60HZ) + COOL:AIR	F1
	1089 9513 41	1	PUSH BUTTON	**(12/12/2018 - 24/02/2019)** ((((CAPPRM:AS1210 , CAPPRM:CE , CAPPRM:MHLW , CAPPRM:MOM) + MOVOL:400V , (CAPPRM:CE + MOVOL:500V , CAPPRM:MHLW + MOVOL:200V) + COOL:AIR) + FREQ:50HZ , (CAPPRM:ASME , CAPPRM:MHLW) + FREQ:60HZ + MOVOL:460V) + CAPPRE:IEC , ((MOVOL:230V , MOVOL:575V) + COOL:AIR , MOVOL:460V) + CAPPRE:ULCUL + CAPPRM:ASME + FREQ:60HZ) **(25/02/2019 - 16/12/2019)** ((((CAPPRM:AS1210 , CAPPRM:CE , CAPPRM:MHLW , CAPPRM:MOM) + MOVOL:400V , CAPPRM:CE + MOVOL:500V , CAPPRM:MHLW + MOVOL:200V) + FREQ:50HZ , (CAPPRM:ASME , CAPPRM:MHLW) + FREQ:60HZ + MOVOL:460V) + CAPPRE:IEC , (MOVOL:230V , MOVOL:460V , MOVOL:575V) + CAPPRE:ULCUL + CAPPRM:ASME + FREQ:60HZ) + COOL:AIR	S3
	1089 9513 28	1	HOLDER	**(12/12/2018 - 24/02/2019)** ((((CAPPRM:AS1210 , CAPPRM:CE , CAPPRM:MHLW , CAPPRM:MOM) + MOVOL:400V , (CAPPRM:CE + MOVOL:500V , CAPPRM:MHLW + MOVOL:200V) + COOL:AIR) + FREQ:50HZ , (CAPPRM:ASME , CAPPRM:MHLW) + FREQ:60HZ + MOVOL:460V) + CAPPRE:IEC , ((MOVOL:230V , MOVOL:575V) + COOL:AIR , MOVOL:460V) + CAPPRE:ULCUL + CAPPRM:ASME + FREQ:60HZ) **(25/02/2019 - 16/12/2019)** ((((CAPPRM:AS1210 , CAPPRM:CE , CAPPRM:MHLW , CAPPRM:MOM) + MOVOL:400V , CAPPRM:CE + MOVOL:500V , CAPPRM:MHLW + MOVOL:200V) + FREQ:50HZ , (CAPPRM:ASME , CAPPRM:MHLW) + FREQ:60HZ + MOVOL:460V) + CAPPRE:IEC , (MOVOL:230V , MOVOL:460V , MOVOL:575V) + CAPPRE:ULCUL + CAPPRM:ASME + FREQ:60HZ) + COOL:AIR	S3

Legend:

CAPPRE:IEC - Component approval electrical:IEC
CAPPRE:ULCUL - Component approval electrical:UL/cUL
CAPPRM:AS1210 - Component approval mechanical:AS1210
CAPPRM:ASME - Component approval mechanical:ASME
CAPPRM:CE - Component approval mechanical:CE
CAPPRM:MHLW - Component approval mechanical:MHLW
CAPPRM:MOM - Component approval mechanical:MOM
COOL:AIR - Cooling:Air cooled
FREQ:50HZ - Frequency:50 Hz
FREQ:60HZ - Frequency:60 Hz
IDRY:Y - Integrated dryer:Yes
MODEL:GA90VP_16 - Model:GA 90VSD+
MOVOL:200V - Supply voltage:200 V
MOVOL:230V - Supply voltage:230 V
MOVOL:400V - Supply voltage:400 V
MOVOL:460V - Supply voltage:460 V
MOVOL:500V - Supply voltage:500 V
MOVOL:575V - Supply voltage:575 V

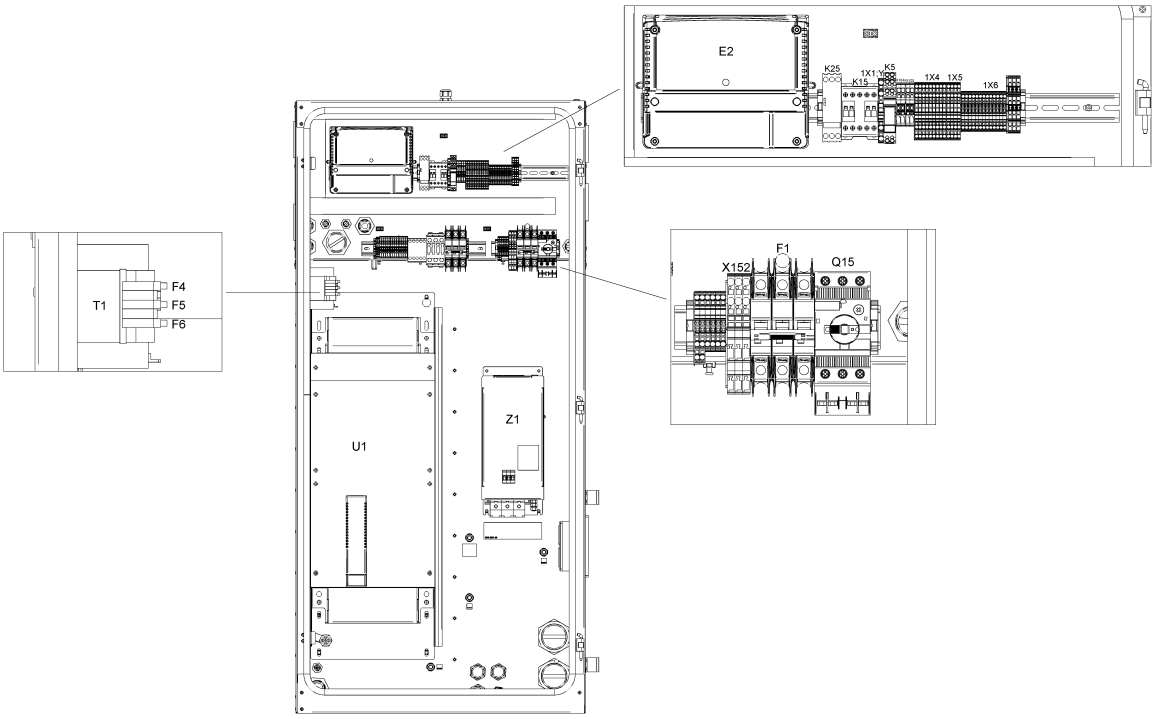
E2
K25
K15
1X1
K5
1X4
1X5
1X6
T1
F4
F5
F6
X152
F1
Q15
U1
Z1

21.18 - Cubicle components GA 90 VSD+ - (200V-400V-500V/50Hz, 460V/60Hz - IEC, 230V-460V-575V/60Hz - UL-cUL) - Full-Feature (12/12/2018 - 16/12/2019)

(((MOVOL:200V , MOVOL:400V , MOVOL:500V) + FREQ:50HZ , FREQ:60HZ + MOVOL:460V) + CAPPRE:IEC , (MOVOL:230V , MOVOL:460V , MOVOL:575V) + CAPPRE:ULCUL + FREQ:60HZ) + IDRY:Y + MODEL:GA90VP_16

Ref	Part Number	Qty	Name	Validity	EL
	~~1089 9513 30~~	4	CONTACTOR	**(12/12/2018 - 24/02/2019)** ((((CAPPRM:AS1210 , CAPPRM:CE , CAPPRM:MHLW , CAPPRM:MOM) + MOVOL:400V , (CAPPRM:CE + MOVOL:500V , CAPPRM:MHLW + MOVOL:200V) + COOL:AIR) + FREQ:50HZ , (CAPPRM:ASME , CAPPRM:MHLW) + FREQ:60HZ + MOVOL:460V) + CAPPRE:IEC , ((MOVOL:230V , MOVOL:575V) + COOL:AIR , MOVOL:460V) + CAPPRE:ULCUL + CAPPRM:ASME + FREQ:60HZ) **(25/02/2019 - 16/12/2019)** ((((CAPPRM:AS1210 , CAPPRM:CE , CAPPRM:MHLW , CAPPRM:MOM) + MOVOL:400V , CAPPRM:CE + MOVOL:500V , CAPPRM:MHLW + MOVOL:200V) + FREQ:50HZ , (CAPPRM:ASME , CAPPRM:MHLW) + FREQ:60HZ + MOVOL:460V) + CAPPRE:IEC , (MOVOL:230V , MOVOL:460V , MOVOL:575V) + CAPPRE:ULCUL + CAPPRM:ASME + FREQ:60HZ) + COOL:AIR	S3
	Substituted by:	1089 9513 04 - CONTACT BLOCK (quantity: 1)			
	1088 0031 02	1	CONNECTOR 2-POLE	**(12/12/2018 - 17/02/2019)** ((((CAPPRM:AS1210 , CAPPRM:CE , CAPPRM:MHLW , CAPPRM:MOM) + MOVOL:400V , (CAPPRM:CE + MOVOL:500V , CAPPRM:MHLW + MOVOL:200V) + COOL:AIR) + FREQ:50HZ , (CAPPRM:ASME , CAPPRM:MHLW) + FREQ:60HZ + MOVOL:460V) + CAPPRE:IEC , ((MOVOL:230V , MOVOL:575V) + COOL:AIR , MOVOL:460V) + CAPPRE:ULCUL + CAPPRM:ASME + FREQ:60HZ)	
	1088 0039 07	3	TERMINAL	**(12/12/2018 - 24/02/2019)** ((((CAPPRM:AS1210 , CAPPRM:CE , CAPPRM:MHLW , CAPPRM:MOM) + MOVOL:400V , (CAPPRM:CE + MOVOL:500V , CAPPRM:MHLW + MOVOL:200V) + COOL:AIR) + FREQ:50HZ , (CAPPRM:ASME , CAPPRM:MHLW) + FREQ:60HZ + MOVOL:460V) + CAPPRE:IEC , ((MOVOL:230V , MOVOL:575V) + COOL:AIR , MOVOL:460V) + CAPPRE:ULCUL + CAPPRM:ASME + FREQ:60HZ) **(25/02/2019 - 16/12/2019)** ((((CAPPRM:AS1210 , CAPPRM:CE , CAPPRM:MHLW , CAPPRM:MOM) + MOVOL:400V , CAPPRM:CE + MOVOL:500V , CAPPRM:MHLW + MOVOL:200V) + FREQ:50HZ , (CAPPRM:ASME , CAPPRM:MHLW) + FREQ:60HZ + MOVOL:460V) + CAPPRE:IEC , (MOVOL:230V , MOVOL:460V , MOVOL:575V) + CAPPRE:ULCUL + CAPPRM:ASME + FREQ:60HZ) + COOL:AIR	X152
	1088 0039 05	1	PLATE	**(12/12/2018 - 24/02/2019)** ((((CAPPRM:AS1210 , CAPPRM:CE , CAPPRM:MHLW , CAPPRM:MOM) + MOVOL:400V , (CAPPRM:CE + MOVOL:500V , CAPPRM:MHLW + MOVOL:200V) + COOL:AIR) + FREQ:50HZ , (CAPPRM:ASME , CAPPRM:MHLW) + FREQ:60HZ + MOVOL:460V) + CAPPRE:IEC , ((MOVOL:230V , MOVOL:575V) + COOL:AIR , MOVOL:460V) + CAPPRE:ULCUL + CAPPRM:ASME + FREQ:60HZ) **(25/02/2019 - 16/12/2019)** ((((CAPPRM:AS1210 , CAPPRM:CE , CAPPRM:MHLW , CAPPRM:MOM) + MOVOL:400V , CAPPRM:CE + MOVOL:500V , CAPPRM:MHLW + MOVOL:200V) + FREQ:50HZ , (CAPPRM:ASME , CAPPRM:MHLW) + FREQ:60HZ + MOVOL:460V) + CAPPRE:IEC , (MOVOL:230V , MOVOL:460V , MOVOL:575V) + CAPPRE:ULCUL + CAPPRM:ASME + FREQ:60HZ) + COOL:AIR	X152

Legend:

CAPPRE:IEC - Component approval electrical:IEC
CAPPRE:ULCUL - Component approval electrical:UL/cUL
CAPPRM:AS1210 - Component approval mechanical:AS1210
CAPPRM:ASME - Component approval mechanical:ASME
CAPPRM:CE - Component approval mechanical:CE
CAPPRM:MHLW - Component approval mechanical:MHLW
CAPPRM:MOM - Component approval mechanical:MOM
COOL:AIR - Cooling:Air cooled
FREQ:50HZ - Frequency:50 Hz
FREQ:60HZ - Frequency:60 Hz
IDRY:Y - Integrated dryer:Yes
MODEL:GA90VP_16 - Model:GA 90VSD+
MOVOL:200V - Supply voltage:200 V
MOVOL:230V - Supply voltage:230 V
MOVOL:400V - Supply voltage:400 V
MOVOL:460V - Supply voltage:460 V
MOVOL:500V - Supply voltage:500 V
MOVOL:575V - Supply voltage:575 V

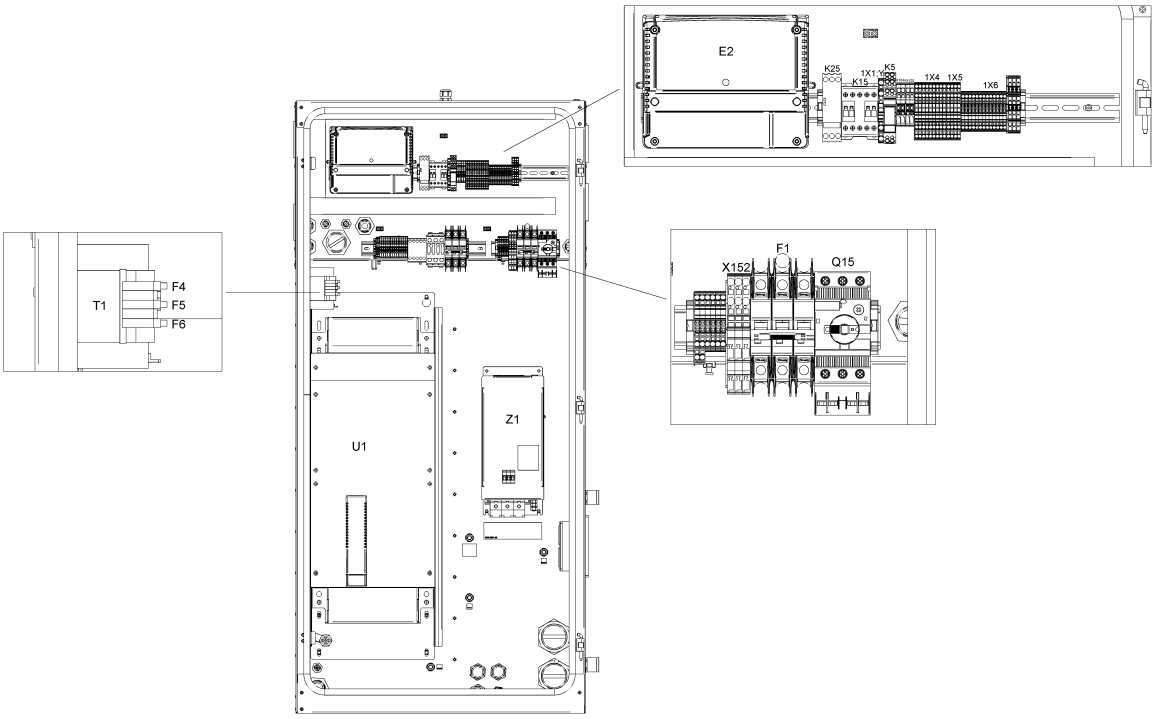
E2
K25
K15
1X1
K5
1X4
1X5
1X6
T1
F4
F5
F6
X152
F1
Q15
U1
Z1

21.18 - Cubicle components GA 90 VSD+ - (200V-400V-500V/50Hz, 460V/60Hz - IEC, 230V-460V-575V/60Hz - UL-cUL) - Full-Feature (12/12/2018 - 16/12/2019)

(((MOVOL:200V , MOVOL:400V , MOVOL:500V) + FREQ:50HZ , FREQ:60HZ + MOVOL:460V) + CAPPRE:IEC , (MOVOL:230V , MOVOL:460V , MOVOL:575V) + CAPPRE:ULCUL + FREQ:60HZ) + IDRY:Y + MODEL:GA90VP_16

Ref	Part Number	Qty	Name	Validity	EL
	1088 0039 26	1	CONNECTOR	**(12/12/2018 - 24/02/2019)** ((((CAPPRM:AS1210 , CAPPRM:CE , CAPPRM:MHLW , CAPPRM:MOM) + MOVOL:400V , (CAPPRM:CE + MOVOL:500V , CAPPRM:MHLW + MOVOL:200V) + COOL:AIR) + FREQ:50HZ , (CAPPRM:ASME , CAPPRM:MHLW) + FREQ:60HZ + MOVOL:460V) + CAPPRE:IEC , ((MOVOL:230V , MOVOL:575V) + COOL:AIR , MOVOL:460V) + CAPPRE:ULCUL + CAPPRM:ASME + FREQ:60HZ) **(25/02/2019 - 16/12/2019)** ((((CAPPRM:AS1210 , CAPPRM:CE , CAPPRM:MHLW , CAPPRM:MOM) + MOVOL:400V , CAPPRM:CE + MOVOL:500V , CAPPRM:MHLW + MOVOL:200V) + FREQ:50HZ , (CAPPRM:ASME , CAPPRM:MHLW) + FREQ:60HZ + MOVOL:460V) + CAPPRE:IEC , (MOVOL:230V , MOVOL:460V , MOVOL:575V) + CAPPRE:ULCUL + CAPPRM:ASME + FREQ:60HZ) + COOL:AIR	
	Electrical legend:	X152 (remove coding pin 1,3)			
	1088 0037 99	4	PIN	**(12/12/2018 - 24/02/2019)** ((((CAPPRM:AS1210 , CAPPRM:CE , CAPPRM:MHLW , CAPPRM:MOM) + MOVOL:400V , (CAPPRM:CE + MOVOL:500V , CAPPRM:MHLW + MOVOL:200V) + COOL:AIR) + FREQ:50HZ , (CAPPRM:ASME , CAPPRM:MHLW) + FREQ:60HZ + MOVOL:460V) + CAPPRE:IEC , ((MOVOL:230V , MOVOL:575V) + COOL:AIR , MOVOL:460V) + CAPPRE:ULCUL + CAPPRM:ASME + FREQ:60HZ) **(25/02/2019 - 16/12/2019)** ((((CAPPRM:AS1210 , CAPPRM:CE , CAPPRM:MHLW , CAPPRM:MOM) + MOVOL:400V , CAPPRM:CE + MOVOL:500V , CAPPRM:MHLW + MOVOL:200V) + FREQ:50HZ , (CAPPRM:ASME , CAPPRM:MHLW) + FREQ:60HZ + MOVOL:460V) + CAPPRE:IEC , (MOVOL:230V , MOVOL:460V , MOVOL:575V) + CAPPRE:ULCUL + CAPPRM:ASME + FREQ:60HZ) + COOL:AIR	X152:1; 3
	~~1088 0031 81~~	7	END STOP BRACKET 6MM	**(12/12/2018 - 24/02/2019)** ((((CAPPRM:AS1210 , CAPPRM:CE , CAPPRM:MHLW , CAPPRM:MOM) + MOVOL:400V , (CAPPRM:CE + MOVOL:500V , CAPPRM:MHLW + MOVOL:200V) + COOL:AIR) + FREQ:50HZ , (CAPPRM:ASME , CAPPRM:MHLW) + FREQ:60HZ + MOVOL:460V) + CAPPRE:IEC , ((MOVOL:230V , MOVOL:575V) + COOL:AIR , MOVOL:460V) + CAPPRE:ULCUL + CAPPRM:ASME + FREQ:60HZ) **(25/02/2019 - 16/12/2019)** ((((CAPPRM:AS1210 , CAPPRM:CE , CAPPRM:MHLW , CAPPRM:MOM) + MOVOL:400V , CAPPRM:CE + MOVOL:500V , CAPPRM:MHLW + MOVOL:200V) + FREQ:50HZ , (CAPPRM:ASME , CAPPRM:MHLW) + FREQ:60HZ + MOVOL:460V) + CAPPRE:IEC , (MOVOL:230V , MOVOL:460V , MOVOL:575V) + CAPPRE:ULCUL + CAPPRM:ASME + FREQ:60HZ) + COOL:AIR	
	Electrical legend:	Connector/terminal rail			
	Substituted by:	1089 0577 82 - END RETAINER (quantity: 1)			

Legend:

CAPPRE:IEC - Component approval electrical:IEC
CAPPRE:ULCUL - Component approval electrical:UL/cUL
CAPPRM:AS1210 - Component approval mechanical:AS1210
CAPPRM:ASME - Component approval mechanical:ASME
CAPPRM:CE - Component approval mechanical:CE
CAPPRM:MHLW - Component approval mechanical:MHLW
CAPPRM:MOM - Component approval mechanical:MOM
COOL:AIR - Cooling:Air cooled
FREQ:50HZ - Frequency:50 Hz
FREQ:60HZ - Frequency:60 Hz
IDRY:Y - Integrated dryer:Yes
MODEL:GA90VP_16 - Model:GA 90VSD+
MOVOL:200V - Supply voltage:200 V
MOVOL:230V - Supply voltage:230 V
MOVOL:400V - Supply voltage:400 V
MOVOL:460V - Supply voltage:460 V
MOVOL:500V - Supply voltage:500 V
MOVOL:575V - Supply voltage:575 V

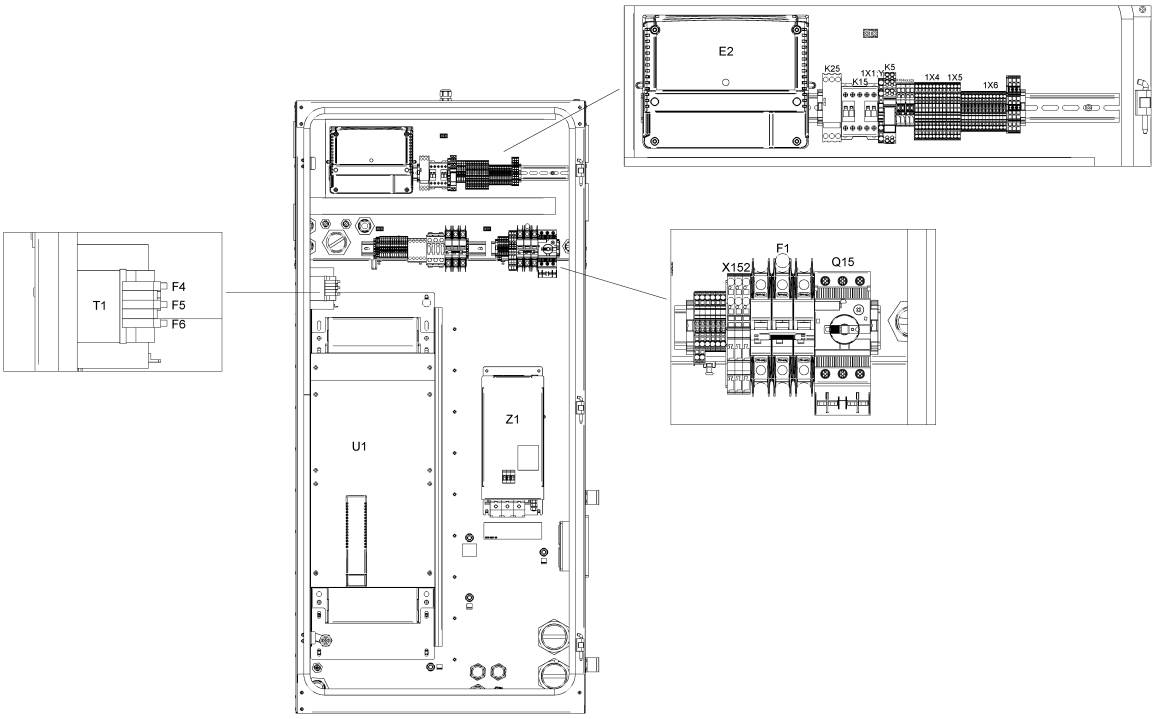
E2
K25
K15
1X1
K5
1X4
1X5
1X6
T1
F4
F5
F6
X152
F1
Q15
U1
Z1

21.18 - Cubicle components GA 90 VSD+ - (200V-400V-500V/50Hz, 460V/60Hz - IEC, 230V-460V-575V/60Hz - UL-cUL) - Full-Feature (12/12/2018 - 16/12/2019)

(((MOVOL:200V , MOVOL:400V , MOVOL:500V) + FREQ:50HZ , FREQ:60HZ + MOVOL:460V) + CAPPRE:IEC , (MOVOL:230V , MOVOL:460V , MOVOL:575V) + CAPPRE:ULCUL + FREQ:60HZ) + IDRY:Y + MODEL:GA90VP_16

Ref	Part Number	Qty	Name	Validity	EL
	1088 0039 38	2	TERMINAL	**(12/12/2018 - 24/02/2019)** ((((CAPPRM:AS1210 , CAPPRM:CE , CAPPRM:MHLW , CAPPRM:MOM) + MOVOL:400V , (CAPPRM:CE + MOVOL:500V , CAPPRM:MHLW + MOVOL:200V) + COOL:AIR) + FREQ:50HZ , (CAPPRM:ASME , CAPPRM:MHLW) + FREQ:60HZ + MOVOL:460V) + CAPPRE:IEC , ((MOVOL:230V , MOVOL:575V) + COOL:AIR , MOVOL:460V) + CAPPRE:ULCUL + CAPPRM:ASME + FREQ:60HZ) **(25/02/2019 - 16/12/2019)** ((((CAPPRM:AS1210 , CAPPRM:CE , CAPPRM:MHLW , CAPPRM:MOM) + MOVOL:400V , CAPPRM:CE + MOVOL:500V , CAPPRM:MHLW + MOVOL:200V) + FREQ:50HZ , (CAPPRM:ASME , CAPPRM:MHLW) + FREQ:60HZ + MOVOL:460V) + CAPPRE:IEC , (MOVOL:230V , MOVOL:460V , MOVOL:575V) + CAPPRE:ULCUL + CAPPRM:ASME + FREQ:60HZ) + COOL:AIR	1X11:2,5
	1088 0039 40	1	PLATE	**(12/12/2018 - 24/02/2019)** ((((CAPPRM:AS1210 , CAPPRM:CE , CAPPRM:MHLW , CAPPRM:MOM) + MOVOL:400V , (CAPPRM:CE + MOVOL:500V , CAPPRM:MHLW + MOVOL:200V) + COOL:AIR) + FREQ:50HZ , (CAPPRM:ASME , CAPPRM:MHLW) + FREQ:60HZ + MOVOL:460V) + CAPPRE:IEC , ((MOVOL:230V , MOVOL:575V) + COOL:AIR , MOVOL:460V) + CAPPRE:ULCUL + CAPPRM:ASME + FREQ:60HZ) **(25/02/2019 - 16/12/2019)** ((((CAPPRM:AS1210 , CAPPRM:CE , CAPPRM:MHLW , CAPPRM:MOM) + MOVOL:400V , CAPPRM:CE + MOVOL:500V , CAPPRM:MHLW + MOVOL:200V) + FREQ:50HZ , (CAPPRM:ASME , CAPPRM:MHLW) + FREQ:60HZ + MOVOL:460V) + CAPPRE:IEC , (MOVOL:230V , MOVOL:460V , MOVOL:575V) + CAPPRE:ULCUL + CAPPRM:ASME + FREQ:60HZ) + COOL:AIR	1X11
	1088 0039 34	4	TERMINAL	**(12/12/2018 - 24/02/2019)** ((((CAPPRM:AS1210 , CAPPRM:CE , CAPPRM:MHLW , CAPPRM:MOM) + MOVOL:400V , (CAPPRM:CE + MOVOL:500V , CAPPRM:MHLW + MOVOL:200V) + COOL:AIR) + FREQ:50HZ , (CAPPRM:ASME , CAPPRM:MHLW) + FREQ:60HZ + MOVOL:460V) + CAPPRE:IEC , ((MOVOL:230V , MOVOL:575V) + COOL:AIR , MOVOL:460V) + CAPPRE:ULCUL + CAPPRM:ASME + FREQ:60HZ) **(25/02/2019 - 16/12/2019)** ((((CAPPRM:AS1210 , CAPPRM:CE , CAPPRM:MHLW , CAPPRM:MOM) + MOVOL:400V , CAPPRM:CE + MOVOL:500V , CAPPRM:MHLW + MOVOL:200V) + FREQ:50HZ , (CAPPRM:ASME , CAPPRM:MHLW) + FREQ:60HZ + MOVOL:460V) + CAPPRE:IEC , (MOVOL:230V , MOVOL:460V , MOVOL:575V) + CAPPRE:ULCUL + CAPPRM:ASME + FREQ:60HZ) + COOL:AIR	

Electrical legend: 1X11:30,301,34

Legend:

CAPPRE:IEC - Component approval electrical:IEC	CAPPRE:ULCUL - Component approval electrical:UL/cUL	CAPPRM:AS1210 - Component approval mechanical:AS1210
CAPPRM:ASME - Component approval mechanical:ASME	CAPPRM:CE - Component approval mechanical:CE	CAPPRM:MHLW - Component approval mechanical:MHLW
CAPPRM:MOM - Component approval mechanical:MOM	COOL:AIR - Cooling:Air cooled	FREQ:50HZ - Frequency:50 Hz
FREQ:60HZ - Frequency:60 Hz	IDRY:Y - Integrated dryer:Yes	MODEL:GA90VP_16 - Model:GA 90VSD+
MOVOL:200V - Supply voltage:200 V	MOVOL:230V - Supply voltage:230 V	MOVOL:400V - Supply voltage:400 V
MOVOL:460V - Supply voltage:460 V	MOVOL:500V - Supply voltage:500 V	MOVOL:575V - Supply voltage:575 V

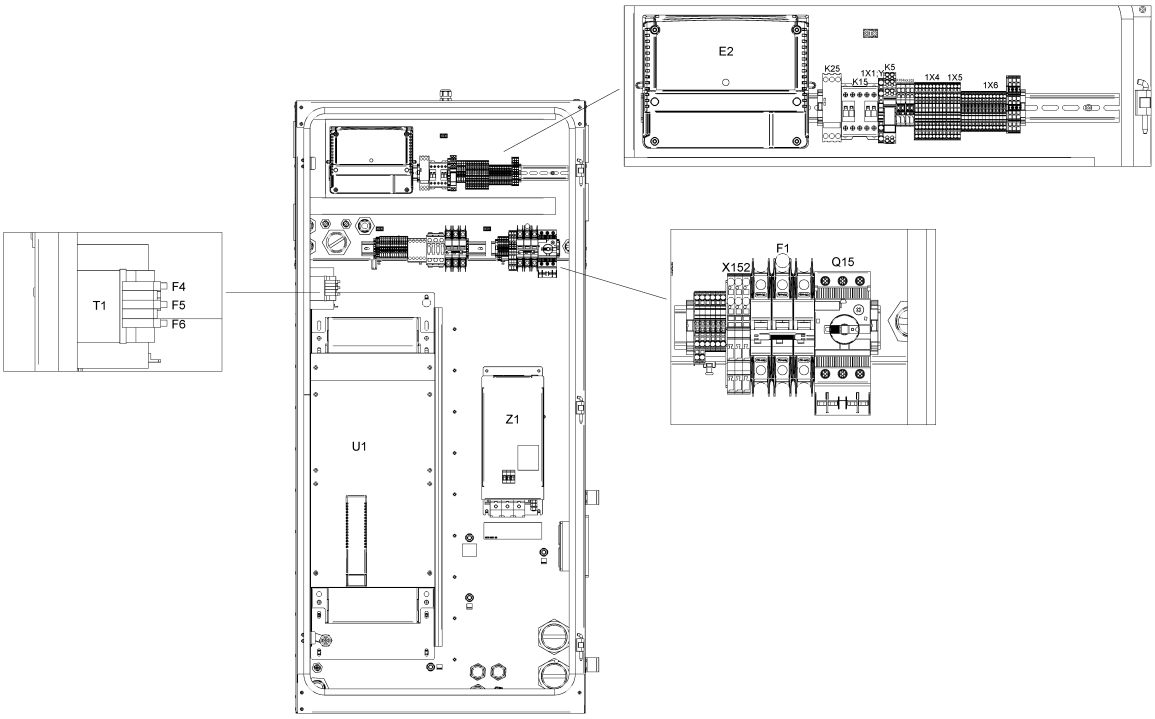
E2
K25
K15
1X1
K5
1X4
1X5
1X6
T1
F4
F5
F6
X152
F1
Q15
U1
Z1

21.18 - Cubicle components GA 90 VSD+ - (200V-400V-500V/50Hz, 460V/60Hz - IEC, 230V-460V-575V/60Hz - UL-cUL) - Full-Feature (12/12/2018 - 16/12/2019)

(((MOVOL:200V , MOVOL:400V , MOVOL:500V) + FREQ:50HZ , FREQ:60HZ + MOVOL:460V) + CAPPRE:IEC , (MOVOL:230V , MOVOL:460V , MOVOL:575V) + CAPPRE:ULCUL + FREQ:60HZ) + IDRY:Y + MODEL:GA90VP_16

Ref	Part Number	Qty	Name	Validity	EL
	1088 0039 35	1	PLATE	**(12/12/2018 - 24/02/2019)** ((((CAPPRM:AS1210 , CAPPRM:CE , CAPPRM:MHLW , CAPPRM:MOM) + MOVOL:400V , (CAPPRM:CE + MOVOL:500V , CAPPRM:MHLW + MOVOL:200V) + COOL:AIR) + FREQ:50HZ , (CAPPRM:ASME , CAPPRM:MHLW) + FREQ:60HZ + MOVOL:460V) + CAPPRE:IEC , ((MOVOL:230V , MOVOL:575V) + COOL:AIR , MOVOL:460V) + CAPPRE:ULCUL + CAPPRM:ASME + FREQ:60HZ) **(25/02/2019 - 16/12/2019)** ((((CAPPRM:AS1210 , CAPPRM:CE , CAPPRM:MHLW , CAPPRM:MOM) + MOVOL:400V , CAPPRM:CE + MOVOL:500V , CAPPRM:MHLW + MOVOL:200V) + FREQ:50HZ , (CAPPRM:ASME , CAPPRM:MHLW) + FREQ:60HZ + MOVOL:460V) + CAPPRE:IEC , (MOVOL:230V , MOVOL:460V , MOVOL:575V) + CAPPRE:ULCUL + CAPPRM:ASME + FREQ:60HZ) + COOL:AIR	1X11
	1088 0039 04	2	TERMINAL	**(12/12/2018 - 24/02/2019)** ((((CAPPRM:AS1210 , CAPPRM:CE , CAPPRM:MHLW , CAPPRM:MOM) + MOVOL:400V , (CAPPRM:CE + MOVOL:500V , CAPPRM:MHLW + MOVOL:200V) + COOL:AIR) + FREQ:50HZ , (CAPPRM:ASME , CAPPRM:MHLW) + FREQ:60HZ + MOVOL:460V) + CAPPRE:IEC , ((MOVOL:230V , MOVOL:575V) + COOL:AIR , MOVOL:460V) + CAPPRE:ULCUL + CAPPRM:ASME + FREQ:60HZ) **(25/02/2019 - 16/12/2019)** ((((CAPPRM:AS1210 , CAPPRM:CE , CAPPRM:MHLW , CAPPRM:MOM) + MOVOL:400V , CAPPRM:CE + MOVOL:500V , CAPPRM:MHLW + MOVOL:200V) + FREQ:50HZ , (CAPPRM:ASME , CAPPRM:MHLW) + FREQ:60HZ + MOVOL:460V) + CAPPRE:IEC , (MOVOL:230V , MOVOL:460V , MOVOL:575V) + CAPPRE:ULCUL + CAPPRM:ASME + FREQ:60HZ) + COOL:AIR	X104a
	1088 0037 99	2	PIN	**(12/12/2018 - 24/02/2019)** ((((CAPPRM:AS1210 , CAPPRM:CE , CAPPRM:MHLW , CAPPRM:MOM) + MOVOL:400V , (CAPPRM:CE + MOVOL:500V , CAPPRM:MHLW + MOVOL:200V) + COOL:AIR) + FREQ:50HZ , (CAPPRM:ASME , CAPPRM:MHLW) + FREQ:60HZ + MOVOL:460V) + CAPPRE:IEC , ((MOVOL:230V , MOVOL:575V) + COOL:AIR , MOVOL:460V) + CAPPRE:ULCUL + CAPPRM:ASME + FREQ:60HZ) **(25/02/2019 - 16/12/2019)** ((((CAPPRM:AS1210 , CAPPRM:CE , CAPPRM:MHLW , CAPPRM:MOM) + MOVOL:400V , CAPPRM:CE + MOVOL:500V , CAPPRM:MHLW + MOVOL:200V) + FREQ:50HZ , (CAPPRM:ASME , CAPPRM:MHLW) + FREQ:60HZ + MOVOL:460V) + CAPPRE:IEC , (MOVOL:230V , MOVOL:460V , MOVOL:575V) + CAPPRE:ULCUL + CAPPRM:ASME + FREQ:60HZ) + COOL:AIR	X104a/X105
	1088 0039 02	1	PLATE	**(12/12/2018 - 24/02/2019)** ((((CAPPRM:AS1210 , CAPPRM:CE , CAPPRM:MHLW , CAPPRM:MOM) + MOVOL:400V , (CAPPRM:CE + MOVOL:500V , CAPPRM:MHLW + MOVOL:200V) + COOL:AIR) + FREQ:50HZ , (CAPPRM:ASME , CAPPRM:MHLW) + FREQ:60HZ + MOVOL:460V) + CAPPRE:IEC , ((MOVOL:230V , MOVOL:575V) + COOL:AIR , MOVOL:460V) + CAPPRE:ULCUL + CAPPRM:ASME + FREQ:60HZ) **(25/02/2019 - 16/12/2019)** ((((CAPPRM:AS1210 , CAPPRM:CE , CAPPRM:MHLW , CAPPRM:MOM) + MOVOL:400V , CAPPRM:CE + MOVOL:500V , CAPPRM:MHLW + MOVOL:200V) + FREQ:50HZ , (CAPPRM:ASME , CAPPRM:MHLW) + FREQ:60HZ + MOVOL:460V) + CAPPRE:IEC , (MOVOL:230V , MOVOL:460V , MOVOL:575V) + CAPPRE:ULCUL + CAPPRM:ASME + FREQ:60HZ) + COOL:AIR	X104a

Legend:

CAPPRE:IEC - Component approval electrical:IEC
CAPPRE:ULCUL - Component approval electrical:UL/cUL
CAPPRM:AS1210 - Component approval mechanical:AS1210
CAPPRM:ASME - Component approval mechanical:ASME
CAPPRM:CE - Component approval mechanical:CE
CAPPRM:MHLW - Component approval mechanical:MHLW
CAPPRM:MOM - Component approval mechanical:MOM
COOL:AIR - Cooling:Air cooled
FREQ:50HZ - Frequency:50 Hz
FREQ:60HZ - Frequency:60 Hz
IDRY:Y - Integrated dryer:Yes
MODEL:GA90VP_16 - Model:GA 90VSD+
MOVOL:200V - Supply voltage:200 V
MOVOL:230V - Supply voltage:230 V
MOVOL:400V - Supply voltage:400 V
MOVOL:460V - Supply voltage:460 V
MOVOL:500V - Supply voltage:500 V
MOVOL:575V - Supply voltage:575 V

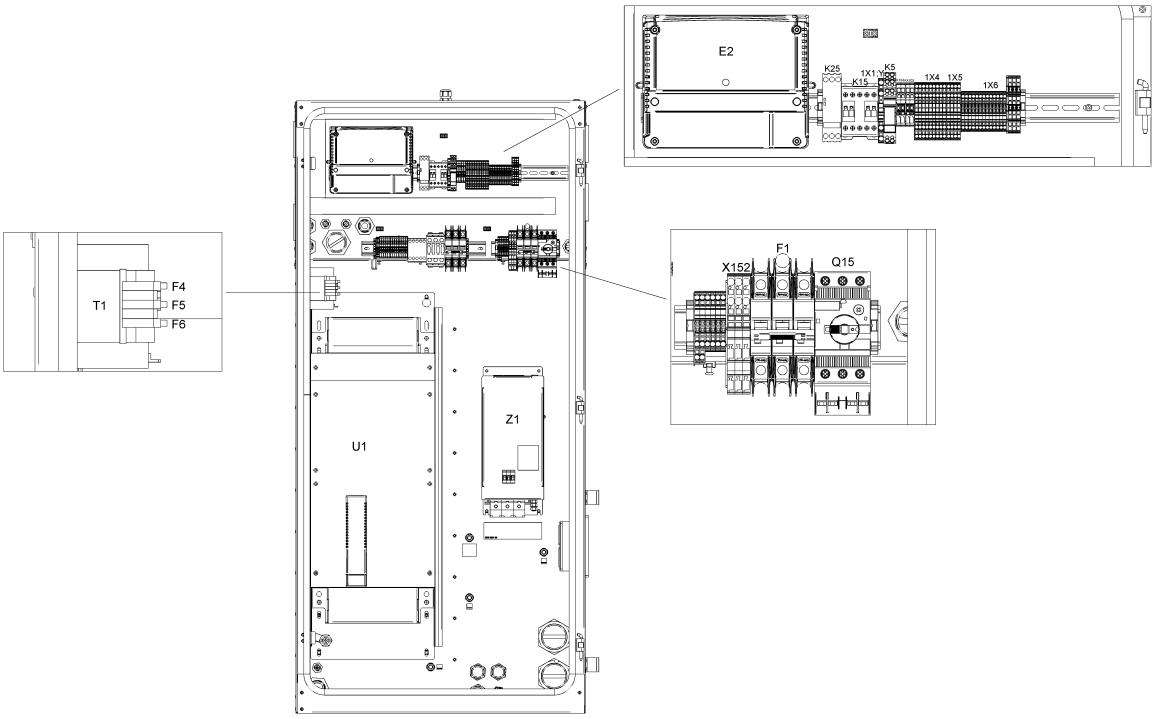
E2
K25
K15
1X1
K5
1X4
1X5
1X6
T1
F4
F5
F6
X152
F1
Q15
U1
Z1

21.18 - Cubicle components GA 90 VSD+ - (200V-400V-500V/50Hz, 460V/60Hz - IEC, 230V-460V-575V/60Hz - UL-cUL) - Full-Feature (12/12/2018 - 16/12/2019)

(((MOVOL:200V , MOVOL:400V , MOVOL:500V) + FREQ:50HZ , FREQ:60HZ + MOVOL:460V) + CAPPRE:IEC , (MOVOL:230V , MOVOL:460V , MOVOL:575V) + CAPPRE:ULCUL + FREQ:60HZ) + IDRY:Y + MODEL:GA90VP_16

Ref	Part Number	Qty	Name	Validity	EL
	1088 0039 07	2	TERMINAL	**(12/12/2018 - 24/02/2019)** ((((CAPPRM:AS1210 , CAPPRM:CE , CAPPRM:MHLW , CAPPRM:MOM) + MOVOL:400V , (CAPPRM:CE + MOVOL:500V , CAPPRM:MHLW + MOVOL:200V) + COOL:AIR) + FREQ:50HZ , (CAPPRM:ASME , CAPPRM:MHLW) + FREQ:60HZ + MOVOL:460V) + CAPPRE:IEC , ((MOVOL:230V , MOVOL:575V) + COOL:AIR , MOVOL:460V) + CAPPRE:ULCUL + CAPPRM:ASME + FREQ:60HZ) **(25/02/2019 - 16/12/2019)** ((((CAPPRM:AS1210 , CAPPRM:CE , CAPPRM:MHLW , CAPPRM:MOM) + MOVOL:400V , CAPPRM:CE + MOVOL:500V , CAPPRM:MHLW + MOVOL:200V) + FREQ:50HZ , (CAPPRM:ASME , CAPPRM:MHLW) + FREQ:60HZ + MOVOL:460V) + CAPPRE:IEC , (MOVOL:230V , MOVOL:460V , MOVOL:575V) + CAPPRE:ULCUL + CAPPRM:ASME + FREQ:60HZ) + COOL:AIR	X105
	1088 0039 05	1	PLATE	**(12/12/2018 - 24/02/2019)** ((((CAPPRM:AS1210 , CAPPRM:CE , CAPPRM:MHLW , CAPPRM:MOM) + MOVOL:400V , (CAPPRM:CE + MOVOL:500V , CAPPRM:MHLW + MOVOL:200V) + COOL:AIR) + FREQ:50HZ , (CAPPRM:ASME , CAPPRM:MHLW) + FREQ:60HZ + MOVOL:460V) + CAPPRE:IEC , ((MOVOL:230V , MOVOL:575V) + COOL:AIR , MOVOL:460V) + CAPPRE:ULCUL + CAPPRM:ASME + FREQ:60HZ) **(25/02/2019 - 16/12/2019)** ((((CAPPRM:AS1210 , CAPPRM:CE , CAPPRM:MHLW , CAPPRM:MOM) + MOVOL:400V , CAPPRM:CE + MOVOL:500V , CAPPRM:MHLW + MOVOL:200V) + FREQ:50HZ , (CAPPRM:ASME , CAPPRM:MHLW) + FREQ:60HZ + MOVOL:460V) + CAPPRE:IEC , (MOVOL:230V , MOVOL:460V , MOVOL:575V) + CAPPRE:ULCUL + CAPPRM:ASME + FREQ:60HZ) + COOL:AIR	X105
	1088 0039 34	13	TERMINAL	**(12/12/2018 - 24/02/2019)** ((((CAPPRM:AS1210 , CAPPRM:CE , CAPPRM:MHLW , CAPPRM:MOM) + MOVOL:400V , (CAPPRM:CE + MOVOL:500V , CAPPRM:MHLW + MOVOL:200V) + COOL:AIR) + FREQ:50HZ , (CAPPRM:ASME , CAPPRM:MHLW) + FREQ:60HZ + MOVOL:460V) + CAPPRE:IEC , ((MOVOL:230V , MOVOL:575V) + COOL:AIR , MOVOL:460V) + CAPPRE:ULCUL + CAPPRM:ASME + FREQ:60HZ) **(25/02/2019 - 16/12/2019)** ((((CAPPRM:AS1210 , CAPPRM:CE , CAPPRM:MHLW , CAPPRM:MOM) + MOVOL:400V , CAPPRM:CE + MOVOL:500V , CAPPRM:MHLW + MOVOL:200V) + FREQ:50HZ , (CAPPRM:ASME , CAPPRM:MHLW) + FREQ:60HZ + MOVOL:460V) + CAPPRE:IEC , (MOVOL:230V , MOVOL:460V , MOVOL:575V) + CAPPRE:ULCUL + CAPPRM:ASME + FREQ:60HZ) + COOL:AIR	1X6
	1088 0037 69	3	CONNECTOR	**(12/12/2018 - 24/02/2019)** ((((CAPPRM:AS1210 , CAPPRM:CE , CAPPRM:MHLW , CAPPRM:MOM) + MOVOL:400V , (CAPPRM:CE + MOVOL:500V , CAPPRM:MHLW + MOVOL:200V) + COOL:AIR) + FREQ:50HZ , (CAPPRM:ASME , CAPPRM:MHLW) + FREQ:60HZ + MOVOL:460V) + CAPPRE:IEC , ((MOVOL:230V , MOVOL:575V) + COOL:AIR , MOVOL:460V) + CAPPRE:ULCUL + CAPPRM:ASME + FREQ:60HZ) **(25/02/2019 - 16/12/2019)** ((((CAPPRM:AS1210 , CAPPRM:CE , CAPPRM:MHLW , CAPPRM:MOM) + MOVOL:400V , CAPPRM:CE + MOVOL:500V , CAPPRM:MHLW + MOVOL:200V) + FREQ:50HZ , (CAPPRM:ASME , CAPPRM:MHLW) + FREQ:60HZ + MOVOL:460V) + CAPPRE:IEC , (MOVOL:230V , MOVOL:460V , MOVOL:575V) + CAPPRE:ULCUL + CAPPRM:ASME + FREQ:60HZ) + COOL:AIR	1X7

Legend:

CAPPRE:IEC - Component approval electrical:IEC
CAPPRE:ULCUL - Component approval electrical:UL/cUL
CAPPRM:AS1210 - Component approval mechanical:AS1210
CAPPRM:ASME - Component approval mechanical:ASME
CAPPRM:CE - Component approval mechanical:CE
CAPPRM:MHLW - Component approval mechanical:MHLW
CAPPRM:MOM - Component approval mechanical:MOM
COOL:AIR - Cooling:Air cooled
FREQ:50HZ - Frequency:50 Hz
FREQ:60HZ - Frequency:60 Hz
IDRY:Y - Integrated dryer:Yes
MODEL:GA90VP_16 - Model:GA 90VSD+
MOVOL:200V - Supply voltage:200 V
MOVOL:230V - Supply voltage:230 V
MOVOL:400V - Supply voltage:400 V
MOVOL:460V - Supply voltage:460 V
MOVOL:500V - Supply voltage:500 V
MOVOL:575V - Supply voltage:575 V

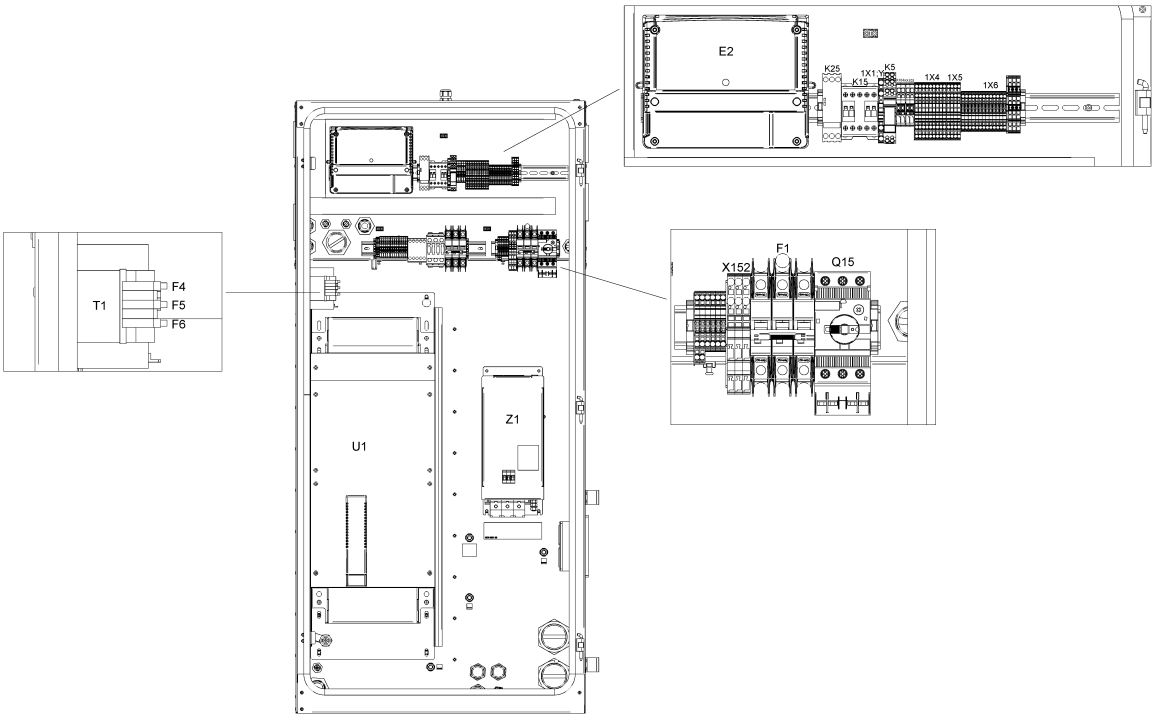
E2
K25
K15
1X1
K5
1X4
1X5
1X6
T1
F4
F5
F6
X152
F1
Q15
U1
Z1

21.18 - Cubicle components GA 90 VSD+ - (200V-400V-500V/50Hz, 460V/60Hz - IEC, 230V-460V-575V/60Hz - UL-cUL) - Full-Feature (12/12/2018 - 16/12/2019)

(((MOVOL:200V , MOVOL:400V , MOVOL:500V) + FREQ:50HZ , FREQ:60HZ + MOVOL:460V) + CAPPRE:IEC , (MOVOL:230V , MOVOL:460V , MOVOL:575V) + CAPPRE:ULCUL + FREQ:60HZ) + IDRY:Y + MODEL:GA90VP_16

Ref	Part Number	Qty	Name	Validity	EL
	1088 0039 35	1	PLATE	**(12/12/2018 - 24/02/2019)** ((((CAPPRM:AS1210 , CAPPRM:CE , CAPPRM:MHLW , CAPPRM:MOM) + MOVOL:400V , (CAPPRM:CE + MOVOL:500V , CAPPRM:MHLW + MOVOL:200V) + COOL:AIR) + FREQ:50HZ , (CAPPRM:ASME , CAPPRM:MHLW) + FREQ:60HZ + MOVOL:460V) + CAPPRE:IEC , ((MOVOL:230V , MOVOL:575V) + COOL:AIR , MOVOL:460V) + CAPPRE:ULCUL + CAPPRM:ASME + FREQ:60HZ) **(25/02/2019 - 16/12/2019)** ((((CAPPRM:AS1210 , CAPPRM:CE , CAPPRM:MHLW , CAPPRM:MOM) + MOVOL:400V , CAPPRM:CE + MOVOL:500V , CAPPRM:MHLW + MOVOL:200V) + FREQ:50HZ , (CAPPRM:ASME , CAPPRM:MHLW) + FREQ:60HZ + MOVOL:460V) + CAPPRE:IEC , (MOVOL:230V , MOVOL:460V , MOVOL:575V) + CAPPRE:ULCUL + CAPPRM:ASME + FREQ:60HZ) + COOL:AIR	1X6
	1088 0040 37	1	END PLATE	**(12/12/2018 - 24/02/2019)** ((((CAPPRM:AS1210 , CAPPRM:CE , CAPPRM:MHLW , CAPPRM:MOM) + MOVOL:400V , (CAPPRM:CE + MOVOL:500V , CAPPRM:MHLW + MOVOL:200V) + COOL:AIR) + FREQ:50HZ , (CAPPRM:ASME , CAPPRM:MHLW) + FREQ:60HZ + MOVOL:460V) + CAPPRE:IEC , ((MOVOL:230V , MOVOL:575V) + COOL:AIR , MOVOL:460V) + CAPPRE:ULCUL + CAPPRM:ASME + FREQ:60HZ) **(25/02/2019 - 16/12/2019)** ((((CAPPRM:AS1210 , CAPPRM:CE , CAPPRM:MHLW , CAPPRM:MOM) + MOVOL:400V , CAPPRM:CE + MOVOL:500V , CAPPRM:MHLW + MOVOL:200V) + FREQ:50HZ , (CAPPRM:ASME , CAPPRM:MHLW) + FREQ:60HZ + MOVOL:460V) + CAPPRE:IEC , (MOVOL:230V , MOVOL:460V , MOVOL:575V) + CAPPRE:ULCUL + CAPPRM:ASME + FREQ:60HZ) + COOL:AIR	1X7
	1088 0039 36	9	TERMINAL	**(12/12/2018 - 24/02/2019)** ((((CAPPRM:AS1210 , CAPPRM:CE , CAPPRM:MHLW , CAPPRM:MOM) + MOVOL:400V , (CAPPRM:CE + MOVOL:500V , CAPPRM:MHLW + MOVOL:200V) + COOL:AIR) + FREQ:50HZ , (CAPPRM:ASME , CAPPRM:MHLW) + FREQ:60HZ + MOVOL:460V) + CAPPRE:IEC , ((MOVOL:230V , MOVOL:575V) + COOL:AIR , MOVOL:460V) + CAPPRE:ULCUL + CAPPRM:ASME + FREQ:60HZ) **(25/02/2019 - 16/12/2019)** ((((CAPPRM:AS1210 , CAPPRM:CE , CAPPRM:MHLW , CAPPRM:MOM) + MOVOL:400V , CAPPRM:CE + MOVOL:500V , CAPPRM:MHLW + MOVOL:200V) + FREQ:50HZ , (CAPPRM:ASME , CAPPRM:MHLW) + FREQ:60HZ + MOVOL:460V) + CAPPRE:IEC , (MOVOL:230V , MOVOL:460V , MOVOL:575V) + CAPPRE:ULCUL + CAPPRM:ASME + FREQ:60HZ) + COOL:AIR	1X4
	1088 0039 36	4	TERMINAL	**(12/12/2018 - 24/02/2019)** ((((CAPPRM:AS1210 , CAPPRM:CE , CAPPRM:MHLW , CAPPRM:MOM) + MOVOL:400V , (CAPPRM:CE + MOVOL:500V , CAPPRM:MHLW + MOVOL:200V) + COOL:AIR) + FREQ:50HZ , (CAPPRM:ASME , CAPPRM:MHLW) + FREQ:60HZ + MOVOL:460V) + CAPPRE:IEC , ((MOVOL:230V , MOVOL:575V) + COOL:AIR , MOVOL:460V) + CAPPRE:ULCUL + CAPPRM:ASME + FREQ:60HZ) **(25/02/2019 - 16/12/2019)** ((((CAPPRM:AS1210 , CAPPRM:CE , CAPPRM:MHLW , CAPPRM:MOM) + MOVOL:400V , CAPPRM:CE + MOVOL:500V , CAPPRM:MHLW + MOVOL:200V) + FREQ:50HZ , (CAPPRM:ASME , CAPPRM:MHLW) + FREQ:60HZ + MOVOL:460V) + CAPPRE:IEC , (MOVOL:230V , MOVOL:460V , MOVOL:575V) + CAPPRE:ULCUL + CAPPRM:ASME + FREQ:60HZ) + COOL:AIR	1X6

Legend:

CAPPRE:IEC - Component approval electrical:IEC
CAPPRE:ULCUL - Component approval electrical:UL/cUL
CAPPRM:AS1210 - Component approval mechanical:AS1210
CAPPRM:ASME - Component approval mechanical:ASME
CAPPRM:CE - Component approval mechanical:CE
CAPPRM:MHLW - Component approval mechanical:MHLW
CAPPRM:MOM - Component approval mechanical:MOM
COOL:AIR - Cooling:Air cooled
FREQ:50HZ - Frequency:50 Hz
FREQ:60HZ - Frequency:60 Hz
IDRY:Y - Integrated dryer:Yes
MODEL:GA90VP_16 - Model:GA 90VSD+
MOVOL:200V - Supply voltage:200 V
MOVOL:230V - Supply voltage:230 V
MOVOL:400V - Supply voltage:400 V
MOVOL:460V - Supply voltage:460 V
MOVOL:500V - Supply voltage:500 V
MOVOL:575V - Supply voltage:575 V

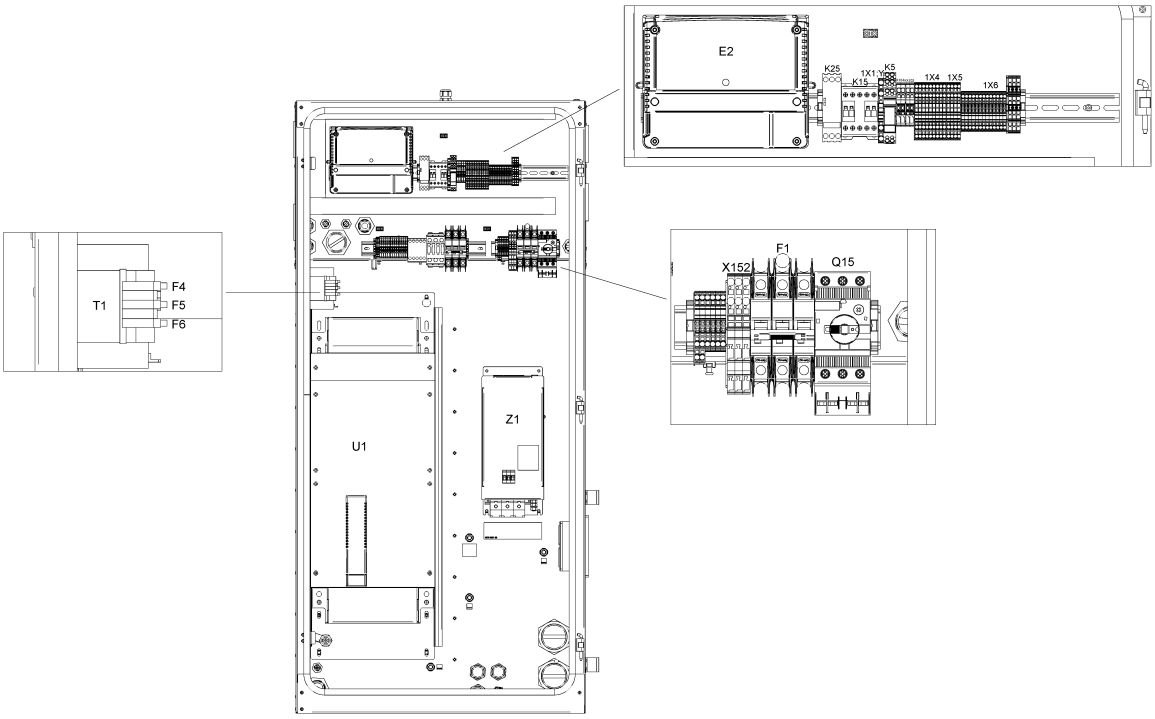
E2
K25
K15
1X1
K5
1X4
1X5
1X6
T1
F4
F5
F6
X152
F1
Q15
U1
Z1

21.18 - Cubicle components GA 90 VSD+ - (200V-400V-500V/50Hz, 460V/60Hz - IEC, 230V-460V-575V/60Hz - UL-cUL) - Full-Feature (12/12/2018 - 16/12/2019)

(((MOVOL:200V , MOVOL:400V , MOVOL:500V) + FREQ:50HZ , FREQ:60HZ + MOVOL:460V) + CAPPRE:IEC , (MOVOL:230V , MOVOL:460V , MOVOL:575V) + CAPPRE:ULCUL + FREQ:60HZ) + IDRY:Y + MODEL:GA90VP_16

Ref	Part Number	Qty	Name	Validity	EL
	1088 0039 37	1	END PLATE	**(12/12/2018 - 24/02/2019)** ((((CAPPRM:AS1210 , CAPPRM:CE , CAPPRM:MHLW , CAPPRM:MOM) + MOVOL:400V , (CAPPRM:CE + MOVOL:500V , CAPPRM:MHLW + MOVOL:200V) + COOL:AIR) + FREQ:50HZ , (CAPPRM:ASME , CAPPRM:MHLW) + FREQ:60HZ + MOVOL:460V) + CAPPRE:IEC , ((MOVOL:230V , MOVOL:575V) + COOL:AIR , MOVOL:460V) + CAPPRE:ULCUL + CAPPRM:ASME + FREQ:60HZ) **(25/02/2019 - 16/12/2019)** ((((CAPPRM:AS1210 , CAPPRM:CE , CAPPRM:MHLW , CAPPRM:MOM) + MOVOL:400V , CAPPRM:CE + MOVOL:500V , CAPPRM:MHLW + MOVOL:200V) + FREQ:50HZ , (CAPPRM:ASME , CAPPRM:MHLW) + FREQ:60HZ + MOVOL:460V) + CAPPRE:IEC , (MOVOL:230V , MOVOL:460V , MOVOL:575V) + CAPPRE:ULCUL + CAPPRM:ASME + FREQ:60HZ) + COOL:AIR	1X4
	1088 0039 37	1	END PLATE	**(12/12/2018 - 24/02/2019)** ((((CAPPRM:AS1210 , CAPPRM:CE , CAPPRM:MHLW , CAPPRM:MOM) + MOVOL:400V , (CAPPRM:CE + MOVOL:500V , CAPPRM:MHLW + MOVOL:200V) + COOL:AIR) + FREQ:50HZ , (CAPPRM:ASME , CAPPRM:MHLW) + FREQ:60HZ + MOVOL:460V) + CAPPRE:IEC , ((MOVOL:230V , MOVOL:575V) + COOL:AIR , MOVOL:460V) + CAPPRE:ULCUL + CAPPRM:ASME + FREQ:60HZ) **(25/02/2019 - 16/12/2019)** ((((CAPPRM:AS1210 , CAPPRM:CE , CAPPRM:MHLW , CAPPRM:MOM) + MOVOL:400V , CAPPRM:CE + MOVOL:500V , CAPPRM:MHLW + MOVOL:200V) + FREQ:50HZ , (CAPPRM:ASME , CAPPRM:MHLW) + FREQ:60HZ + MOVOL:460V) + CAPPRE:IEC , (MOVOL:230V , MOVOL:460V , MOVOL:575V) + CAPPRE:ULCUL + CAPPRM:ASME + FREQ:60HZ) + COOL:AIR	1X6
	1088 0039 37	1	END PLATE	**(12/12/2018 - 24/02/2019)** ((((CAPPRM:AS1210 , CAPPRM:CE , CAPPRM:MHLW , CAPPRM:MOM) + MOVOL:400V , (CAPPRM:CE + MOVOL:500V , CAPPRM:MHLW + MOVOL:200V) + COOL:AIR) + FREQ:50HZ , (CAPPRM:ASME , CAPPRM:MHLW) + FREQ:60HZ + MOVOL:460V) + CAPPRE:IEC , ((MOVOL:230V , MOVOL:575V) + COOL:AIR , MOVOL:460V) + CAPPRE:ULCUL + CAPPRM:ASME + FREQ:60HZ) **(25/02/2019 - 16/12/2019)** ((((CAPPRM:AS1210 , CAPPRM:CE , CAPPRM:MHLW , CAPPRM:MOM) + MOVOL:400V , CAPPRM:CE + MOVOL:500V , CAPPRM:MHLW + MOVOL:200V) + FREQ:50HZ , (CAPPRM:ASME , CAPPRM:MHLW) + FREQ:60HZ + MOVOL:460V) + CAPPRE:IEC , (MOVOL:230V , MOVOL:460V , MOVOL:575V) + CAPPRE:ULCUL + CAPPRM:ASME + FREQ:60HZ) + COOL:AIR	1X1:Y/D
	1088 0037 81	1	CONNECTOR	**(12/12/2018 - 24/02/2019)** ((((CAPPRM:AS1210 , CAPPRM:CE , CAPPRM:MHLW , CAPPRM:MOM) + MOVOL:400V , (CAPPRM:CE + MOVOL:500V , CAPPRM:MHLW + MOVOL:200V) + COOL:AIR) + FREQ:50HZ , (CAPPRM:ASME , CAPPRM:MHLW) + FREQ:60HZ + MOVOL:460V) + CAPPRE:IEC , ((MOVOL:230V , MOVOL:575V) + COOL:AIR , MOVOL:460V) + CAPPRE:ULCUL + CAPPRM:ASME + FREQ:60HZ) **(25/02/2019 - 16/12/2019)** ((((CAPPRM:AS1210 , CAPPRM:CE , CAPPRM:MHLW , CAPPRM:MOM) + MOVOL:400V , CAPPRM:CE + MOVOL:500V , CAPPRM:MHLW + MOVOL:200V) + FREQ:50HZ , (CAPPRM:ASME , CAPPRM:MHLW) + FREQ:60HZ + MOVOL:460V) + CAPPRE:IEC , (MOVOL:230V , MOVOL:460V , MOVOL:575V) + CAPPRE:ULCUL + CAPPRM:ASME + FREQ:60HZ) + COOL:AIR	2X27

Legend:

CAPPRE:IEC - Component approval electrical:IEC
CAPPRE:ULCUL - Component approval electrical:UL/cUL
CAPPRM:AS1210 - Component approval mechanical:AS1210
CAPPRM:ASME - Component approval mechanical:ASME
CAPPRM:CE - Component approval mechanical:CE
CAPPRM:MHLW - Component approval mechanical:MHLW
CAPPRM:MOM - Component approval mechanical:MOM
COOL:AIR - Cooling:Air cooled
FREQ:50HZ - Frequency:50 Hz
FREQ:60HZ - Frequency:60 Hz
IDRY:Y - Integrated dryer:Yes
MODEL:GA90VP_16 - Model:GA 90VSD+
MOVOL:200V - Supply voltage:200 V
MOVOL:230V - Supply voltage:230 V
MOVOL:400V - Supply voltage:400 V
MOVOL:460V - Supply voltage:460 V
MOVOL:500V - Supply voltage:500 V
MOVOL:575V - Supply voltage:575 V

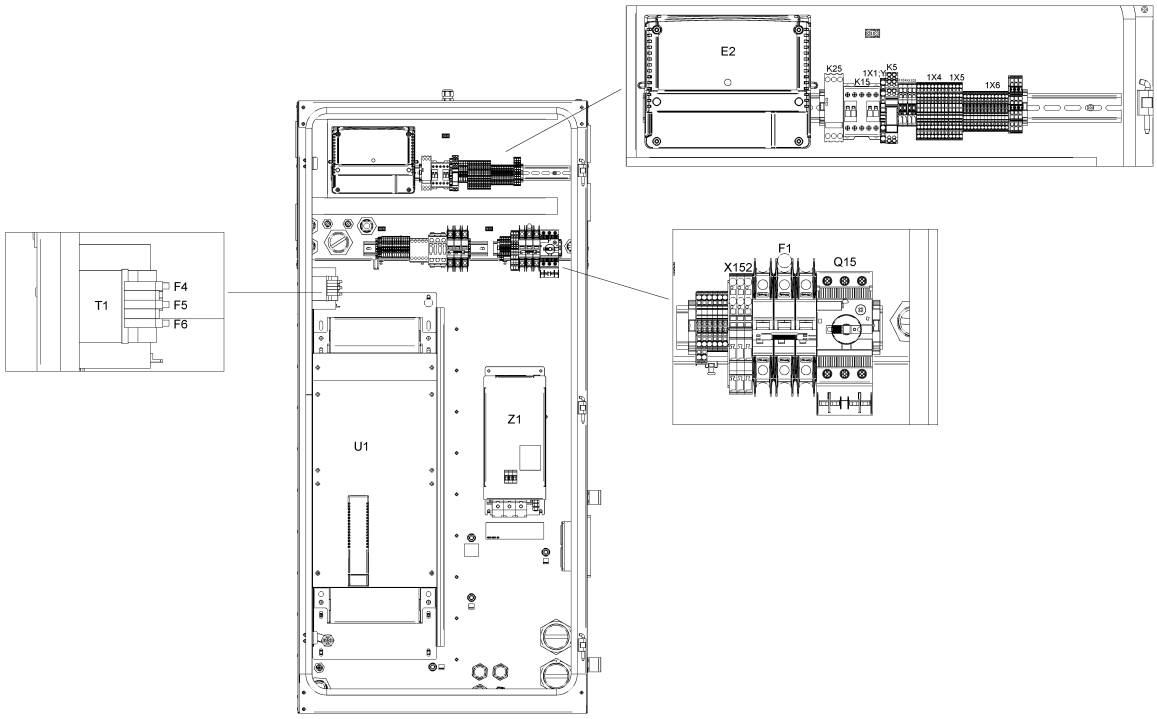
E2
K25
K15
1X1
K5
1X4
1X5
1X6
T1
F4
F5
F6
X152
F1
Q15
U1
Z1

21.18 - Cubicle components GA 90 VSD+ - (200V-400V-500V/50Hz, 460V/60Hz - IEC, 230V-460V-575V/60Hz - UL-cUL) - Full-Feature (12/12/2018 - 16/12/2019)

(((MOVOL:200V , MOVOL:400V , MOVOL:500V) + FREQ:50HZ , FREQ:60HZ + MOVOL:460V) + CAPPRE:IEC , (MOVOL:230V , MOVOL:460V , MOVOL:575V) + CAPPRE:ULCUL + FREQ:60HZ) + IDRY:Y + MODEL:GA90VP_16

Ref	Part Number	Qty	Name	Validity	EL
	1088 0037 80	1	CONNECTOR	**(12/12/2018 - 24/02/2019)** ((((CAPPRM:AS1210 , CAPPRM:CE , CAPPRM:MHLW , CAPPRM:MOM) + MOVOL:400V , (CAPPRM:CE + MOVOL:500V , CAPPRM:MHLW + MOVOL:200V) + COOL:AIR) + FREQ:50HZ , (CAPPRM:ASME , CAPPRM:MHLW) + FREQ:60HZ + MOVOL:460V) + CAPPRE:IEC , ((MOVOL:230V , MOVOL:575V) + COOL:AIR , MOVOL:460V) + CAPPRE:ULCUL + CAPPRM:ASME + FREQ:60HZ) **(25/02/2019 - 16/12/2019)** ((((CAPPRM:AS1210 , CAPPRM:CE , CAPPRM:MHLW , CAPPRM:MOM) + MOVOL:400V , CAPPRM:CE + MOVOL:500V , CAPPRM:MHLW + MOVOL:200V) + FREQ:50HZ , (CAPPRM:ASME , CAPPRM:MHLW) + FREQ:60HZ + MOVOL:460V) + CAPPRE:IEC , (MOVOL:230V , MOVOL:460V , MOVOL:575V) + CAPPRE:ULCUL + CAPPRM:ASME + FREQ:60HZ) + COOL:AIR	2X28
	1088 0031 32	1	CONNECTOR	**(12/12/2018 - 24/02/2019)** ((((CAPPRM:AS1210 , CAPPRM:CE , CAPPRM:MHLW , CAPPRM:MOM) + MOVOL:400V , (CAPPRM:CE + MOVOL:500V , CAPPRM:MHLW + MOVOL:200V) + COOL:AIR) + FREQ:50HZ , (CAPPRM:ASME , CAPPRM:MHLW) + FREQ:60HZ + MOVOL:460V) + CAPPRE:IEC , ((MOVOL:230V , MOVOL:575V) + COOL:AIR , MOVOL:460V) + CAPPRE:ULCUL + CAPPRM:ASME + FREQ:60HZ) **(25/02/2019 - 16/12/2019)** ((((CAPPRM:AS1210 , CAPPRM:CE , CAPPRM:MHLW , CAPPRM:MOM) + MOVOL:400V , CAPPRM:CE + MOVOL:500V , CAPPRM:MHLW + MOVOL:200V) + FREQ:50HZ , (CAPPRM:ASME , CAPPRM:MHLW) + FREQ:60HZ + MOVOL:460V) + CAPPRE:IEC , (MOVOL:230V , MOVOL:460V , MOVOL:575V) + CAPPRE:ULCUL + CAPPRM:ASME + FREQ:60HZ) + COOL:AIR	2X30
	1088 0031 26	1	CONNECTOR 6-POLE	**(12/12/2018 - 24/02/2019)** ((((CAPPRM:AS1210 , CAPPRM:CE , CAPPRM:MHLW , CAPPRM:MOM) + MOVOL:400V , (CAPPRM:CE + MOVOL:500V , CAPPRM:MHLW + MOVOL:200V) + COOL:AIR) + FREQ:50HZ , (CAPPRM:ASME , CAPPRM:MHLW) + FREQ:60HZ + MOVOL:460V) + CAPPRE:IEC , ((MOVOL:230V , MOVOL:575V) + COOL:AIR , MOVOL:460V) + CAPPRE:ULCUL + CAPPRM:ASME + FREQ:60HZ) **(25/02/2019 - 16/12/2019)** ((((CAPPRM:AS1210 , CAPPRM:CE , CAPPRM:MHLW , CAPPRM:MOM) + MOVOL:400V , CAPPRM:CE + MOVOL:500V , CAPPRM:MHLW + MOVOL:200V) + FREQ:50HZ , (CAPPRM:ASME , CAPPRM:MHLW) + FREQ:60HZ + MOVOL:460V) + CAPPRE:IEC , (MOVOL:230V , MOVOL:460V , MOVOL:575V) + CAPPRE:ULCUL + CAPPRM:ASME + FREQ:60HZ) + COOL:AIR	2X31
	~~1089 9664 06~~	1	SWITCH	**(12/12/2018 - 24/02/2019)** ((((CAPPRM:AS1210 , CAPPRM:CE , CAPPRM:MHLW , CAPPRM:MOM) + MOVOL:400V , (CAPPRM:CE + MOVOL:500V , CAPPRM:MHLW + MOVOL:200V) + COOL:AIR) + FREQ:50HZ , (CAPPRM:ASME , CAPPRM:MHLW) + FREQ:60HZ + MOVOL:460V) + CAPPRE:IEC , ((MOVOL:230V , MOVOL:575V) + COOL:AIR , MOVOL:460V) + CAPPRE:ULCUL + CAPPRM:ASME + FREQ:60HZ) **(25/02/2019 - 16/12/2019)** ((((CAPPRM:AS1210 , CAPPRM:CE , CAPPRM:MHLW , CAPPRM:MOM) + MOVOL:400V , CAPPRM:CE + MOVOL:500V , CAPPRM:MHLW + MOVOL:200V) + FREQ:50HZ , (CAPPRM:ASME , CAPPRM:MHLW) + FREQ:60HZ + MOVOL:460V) + CAPPRE:IEC , (MOVOL:230V , MOVOL:460V , MOVOL:575V) + CAPPRE:ULCUL + CAPPRM:ASME + FREQ:60HZ) + COOL:AIR	Q15

Legend:

CAPPRE:IEC - Component approval electrical:IEC
CAPPRE:ULCUL - Component approval electrical:UL/cUL
CAPPRM:AS1210 - Component approval mechanical:AS1210
CAPPRM:ASME - Component approval mechanical:ASME
CAPPRM:CE - Component approval mechanical:CE
CAPPRM:MHLW - Component approval mechanical:MHLW
CAPPRM:MOM - Component approval mechanical:MOM
COOL:AIR - Cooling:Air cooled
FREQ:50HZ - Frequency:50 Hz
FREQ:60HZ - Frequency:60 Hz
IDRY:Y - Integrated dryer:Yes
MODEL:GA90VP_16 - Model:GA 90VSD+
MOVOL:200V - Supply voltage:200 V
MOVOL:230V - Supply voltage:230 V
MOVOL:400V - Supply voltage:400 V
MOVOL:460V - Supply voltage:460 V
MOVOL:500V - Supply voltage:500 V
MOVOL:575V - Supply voltage:575 V

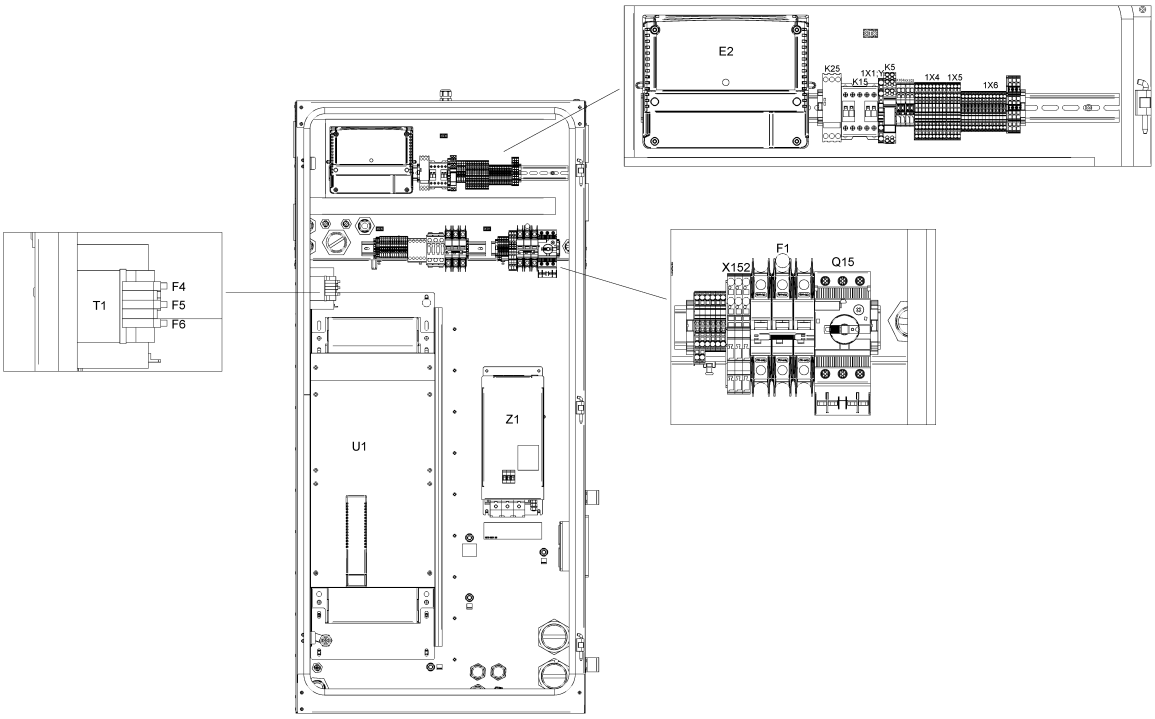
E2
K25
K15
1X1
K5
1X4
1X5
1X6
T1
F4
F5
F6
X152
F1
Q15
U1
Z1

21.18 - Cubicle components GA 90 VSD+ - (200V-400V-500V/50Hz, 460V/60Hz - IEC, 230V-460V-575V/60Hz - UL-cUL) - Full-Feature (12/12/2018 - 16/12/2019)

(((MOVOL:200V , MOVOL:400V , MOVOL:500V) + FREQ:50HZ , FREQ:60HZ + MOVOL:460V) + CAPPRE:IEC , (MOVOL:230V , MOVOL:460V , MOVOL:575V) + CAPPRE:ULCUL + FREQ:60HZ) + IDRY:Y + MODEL:GA90VP_16

Ref	Part Number	Qty	Name	Validity	EL
	Substituted by:	1089 9551 97 - AUX.CONTACT CIRCUIT BREAKER (quantity: 1)			
	1089 9551 18	1	CIRCUIT BREAKER	**(12/12/2018 - 24/02/2019)** ((((CAPPRM:AS1210 , CAPPRM:CE , CAPPRM:MHLW , CAPPRM:MOM) + MOVOL:400V , (CAPPRM:CE + MOVOL:500V , CAPPRM:MHLW + MOVOL:200V) + COOL:AIR) + FREQ:50HZ , (CAPPRM:ASME , CAPPRM:MHLW) + FREQ:60HZ + MOVOL:460V) + CAPPRE:IEC , ((MOVOL:230V , MOVOL:575V) + COOL:AIR , MOVOL:460V) + CAPPRE:ULCUL + CAPPRM:ASME + FREQ:60HZ) **(25/02/2019 - 16/12/2019)** ((((CAPPRM:AS1210 , CAPPRM:CE , CAPPRM:MHLW , CAPPRM:MOM) + MOVOL:400V , CAPPRM:CE + MOVOL:500V , CAPPRM:MHLW + MOVOL:200V) + FREQ:50HZ , (CAPPRM:ASME , CAPPRM:MHLW) + FREQ:60HZ + MOVOL:460V) + CAPPRE:IEC , (MOVOL:230V , MOVOL:460V , MOVOL:575V) + CAPPRE:ULCUL + CAPPRM:ASME + FREQ:60HZ) + COOL:AIR	Q15
	1088 0038 26	1	TERMINAL	**(12/12/2018 - 24/02/2019)** ((((CAPPRM:AS1210 , CAPPRM:CE , CAPPRM:MHLW , CAPPRM:MOM) + MOVOL:400V , (CAPPRM:CE + MOVOL:500V , CAPPRM:MHLW + MOVOL:200V) + COOL:AIR) + FREQ:50HZ , (CAPPRM:ASME , CAPPRM:MHLW) + FREQ:60HZ + MOVOL:460V) + CAPPRE:IEC , ((MOVOL:230V , MOVOL:575V) + COOL:AIR , MOVOL:460V) + CAPPRE:ULCUL + CAPPRM:ASME + FREQ:60HZ) **(25/02/2019 - 16/12/2019)** ((((CAPPRM:AS1210 , CAPPRM:CE , CAPPRM:MHLW , CAPPRM:MOM) + MOVOL:400V , CAPPRM:CE + MOVOL:500V , CAPPRM:MHLW + MOVOL:200V) + FREQ:50HZ , (CAPPRM:ASME , CAPPRM:MHLW) + FREQ:60HZ + MOVOL:460V) + CAPPRE:IEC , (MOVOL:230V , MOVOL:460V , MOVOL:575V) + CAPPRE:ULCUL + CAPPRM:ASME + FREQ:60HZ) + COOL:AIR	1X1:Y/D
	1089 9602 79	1	CONTACTOR 110 V	**(12/12/2018 - 24/02/2019)** ((((CAPPRM:AS1210 , CAPPRM:CE , CAPPRM:MHLW , CAPPRM:MOM) + MOVOL:400V , (CAPPRM:CE + MOVOL:500V , CAPPRM:MHLW + MOVOL:200V) + COOL:AIR) + FREQ:50HZ , (CAPPRM:ASME , CAPPRM:MHLW) + FREQ:60HZ + MOVOL:460V) + CAPPRE:IEC , ((MOVOL:230V , MOVOL:575V) + COOL:AIR , MOVOL:460V) + CAPPRE:ULCUL + CAPPRM:ASME + FREQ:60HZ) **(25/02/2019 - 16/12/2019)** ((((CAPPRM:AS1210 , CAPPRM:CE , CAPPRM:MHLW , CAPPRM:MOM) + MOVOL:400V , CAPPRM:CE + MOVOL:500V , CAPPRM:MHLW + MOVOL:200V) + FREQ:50HZ , (CAPPRM:ASME , CAPPRM:MHLW) + FREQ:60HZ + MOVOL:460V) + CAPPRE:IEC , (MOVOL:230V , MOVOL:460V , MOVOL:575V) + CAPPRE:ULCUL + CAPPRM:ASME + FREQ:60HZ) + COOL:AIR	K15

Legend:

CAPPRE:IEC - Component approval electrical:IEC
CAPPRE:ULCUL - Component approval electrical:UL/cUL
CAPPRM:AS1210 - Component approval mechanical:AS1210
CAPPRM:ASME - Component approval mechanical:ASME
CAPPRM:CE - Component approval mechanical:CE
CAPPRM:MHLW - Component approval mechanical:MHLW
CAPPRM:MOM - Component approval mechanical:MOM
COOL:AIR - Cooling:Air cooled
FREQ:50HZ - Frequency:50 Hz
FREQ:60HZ - Frequency:60 Hz
IDRY:Y - Integrated dryer:Yes
MODEL:GA90VP_16 - Model:GA 90VSD+
MOVOL:200V - Supply voltage:200 V
MOVOL:230V - Supply voltage:230 V
MOVOL:400V - Supply voltage:400 V
MOVOL:460V - Supply voltage:460 V
MOVOL:500V - Supply voltage:500 V
MOVOL:575V - Supply voltage:575 V

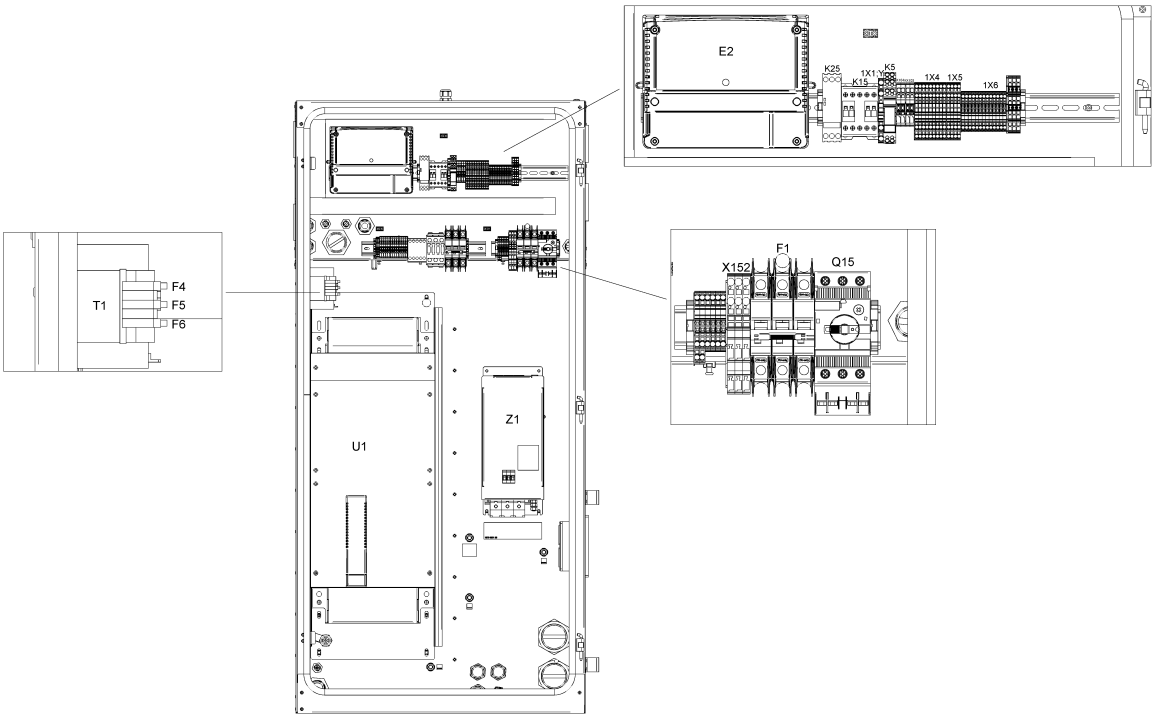
E2
K25
K15
1X1
K5
1X4
1X5
1X6
T1
F4
F5
F6
X152
F1
Q15
U1
Z1

21.18 - Cubicle components GA 90 VSD+ - (200V-400V-500V/50Hz, 460V/60Hz - IEC, 230V-460V-575V/60Hz - UL-cUL) - Full-Feature (12/12/2018 - 16/12/2019)

(((MOVOL:200V , MOVOL:400V , MOVOL:500V) + FREQ:50HZ , FREQ:60HZ + MOVOL:460V) + CAPPRE:IEC , (MOVOL:230V , MOVOL:460V , MOVOL:575V) + CAPPRE:ULCUL + FREQ:60HZ) + IDRY:Y + MODEL:GA90VP_16

Ref	Part Number	Qty	Name	Validity	EL
	1089 9461 26	1	PHASE SEQUENCE RELAY	**(12/12/2018 - 24/02/2019)** ((((CAPPRM:AS1210 , CAPPRM:CE , CAPPRM:MHLW , CAPPRM:MOM) + MOVOL:400V , (CAPPRM:CE + MOVOL:500V , CAPPRM:MHLW + MOVOL:200V) + COOL:AIR) + FREQ:50HZ , (CAPPRM:ASME , CAPPRM:MHLW) + FREQ:60HZ + MOVOL:460V) + CAPPRE:IEC , ((MOVOL:230V , MOVOL:575V) + COOL:AIR , MOVOL:460V) + CAPPRE:ULCUL + CAPPRM:ASME + FREQ:60HZ) **(25/02/2019 - 16/12/2019)** ((((CAPPRM:AS1210 , CAPPRM:CE , CAPPRM:MHLW , CAPPRM:MOM) + MOVOL:400V , CAPPRM:CE + MOVOL:500V , CAPPRM:MHLW + MOVOL:200V) + FREQ:50HZ , (CAPPRM:ASME , CAPPRM:MHLW) + FREQ:60HZ + MOVOL:460V) + CAPPRE:IEC , (MOVOL:230V , MOVOL:460V , MOVOL:575V) + CAPPRE:ULCUL + CAPPRM:ASME + FREQ:60HZ) + COOL:AIR	K25
	1088 0032 17	1	RELAY 115 VAC	**(12/12/2018 - 24/02/2019)** ((((CAPPRM:AS1210 , CAPPRM:CE , CAPPRM:MHLW , CAPPRM:MOM) + MOVOL:400V , (CAPPRM:CE + MOVOL:500V , CAPPRM:MHLW + MOVOL:200V) + COOL:AIR) + FREQ:50HZ , (CAPPRM:ASME , CAPPRM:MHLW) + FREQ:60HZ + MOVOL:460V) + CAPPRE:IEC , ((MOVOL:230V , MOVOL:575V) + COOL:AIR , MOVOL:460V) + CAPPRE:ULCUL + CAPPRM:ASME + FREQ:60HZ) **(25/02/2019 - 16/12/2019)** ((((CAPPRM:AS1210 , CAPPRM:CE , CAPPRM:MHLW , CAPPRM:MOM) + MOVOL:400V , CAPPRM:CE + MOVOL:500V , CAPPRM:MHLW + MOVOL:200V) + FREQ:50HZ , (CAPPRM:ASME , CAPPRM:MHLW) + FREQ:60HZ + MOVOL:460V) + CAPPRE:IEC , (MOVOL:230V , MOVOL:460V , MOVOL:575V) + CAPPRE:ULCUL + CAPPRM:ASME + FREQ:60HZ) + COOL:AIR	K5
	0991 8011 21	AR	CABLE TRAY	**(12/12/2018 - 24/02/2019)** ((((CAPPRM:AS1210 , CAPPRM:CE , CAPPRM:MHLW , CAPPRM:MOM) + MOVOL:400V , (CAPPRM:CE + MOVOL:500V , CAPPRM:MHLW + MOVOL:200V) + COOL:AIR) + FREQ:50HZ , (CAPPRM:ASME , CAPPRM:MHLW) + FREQ:60HZ + MOVOL:460V) + CAPPRE:IEC , ((MOVOL:230V , MOVOL:575V) + COOL:AIR , MOVOL:460V) + CAPPRE:ULCUL + CAPPRM:ASME + FREQ:60HZ) **(25/02/2019 - 16/12/2019)** ((((CAPPRM:AS1210 , CAPPRM:CE , CAPPRM:MHLW , CAPPRM:MOM) + MOVOL:400V , CAPPRM:CE + MOVOL:500V , CAPPRM:MHLW + MOVOL:200V) + FREQ:50HZ , (CAPPRM:ASME , CAPPRM:MHLW) + FREQ:60HZ + MOVOL:460V) + CAPPRE:IEC , (MOVOL:230V , MOVOL:460V , MOVOL:575V) + CAPPRE:ULCUL + CAPPRM:ASME + FREQ:60HZ) + COOL:AIR	L=1384mm
	1900 2203 02	1	DRYER RAIL	**(12/12/2018 - 24/02/2019)** ((((CAPPRM:AS1210 , CAPPRM:CE , CAPPRM:MHLW , CAPPRM:MOM) + MOVOL:400V , (CAPPRM:CE + MOVOL:500V , CAPPRM:MHLW + MOVOL:200V) + COOL:AIR) + FREQ:50HZ , (CAPPRM:ASME , CAPPRM:MHLW) + FREQ:60HZ + MOVOL:460V) + CAPPRE:IEC , ((MOVOL:230V , MOVOL:575V) + COOL:AIR , MOVOL:460V) + CAPPRE:ULCUL + CAPPRM:ASME + FREQ:60HZ) **(25/02/2019 - 16/12/2019)** ((((CAPPRM:AS1210 , CAPPRM:CE , CAPPRM:MHLW , CAPPRM:MOM) + MOVOL:400V , CAPPRM:CE + MOVOL:500V , CAPPRM:MHLW + MOVOL:200V) + FREQ:50HZ , (CAPPRM:ASME , CAPPRM:MHLW) + FREQ:60HZ + MOVOL:460V) + CAPPRE:IEC , (MOVOL:230V , MOVOL:460V , MOVOL:575V) + CAPPRE:ULCUL + CAPPRM:ASME + FREQ:60HZ) + COOL:AIR	

Legend:

CAPPRE:IEC - Component approval electrical:IEC
CAPPRE:ULCUL - Component approval electrical:UL/cUL
CAPPRM:AS1210 - Component approval mechanical:AS1210
CAPPRM:ASME - Component approval mechanical:ASME
CAPPRM:CE - Component approval mechanical:CE
CAPPRM:MHLW - Component approval mechanical:MHLW
CAPPRM:MOM - Component approval mechanical:MOM
COOL:AIR - Cooling:Air cooled
FREQ:50HZ - Frequency:50 Hz
FREQ:60HZ - Frequency:60 Hz
IDRY:Y - Integrated dryer:Yes
MODEL:GA90VP_16 - Model:GA 90VSD+
MOVOL:200V - Supply voltage:200 V
MOVOL:230V - Supply voltage:230 V
MOVOL:400V - Supply voltage:400 V
MOVOL:460V - Supply voltage:460 V
MOVOL:500V - Supply voltage:500 V
MOVOL:575V - Supply voltage:575 V

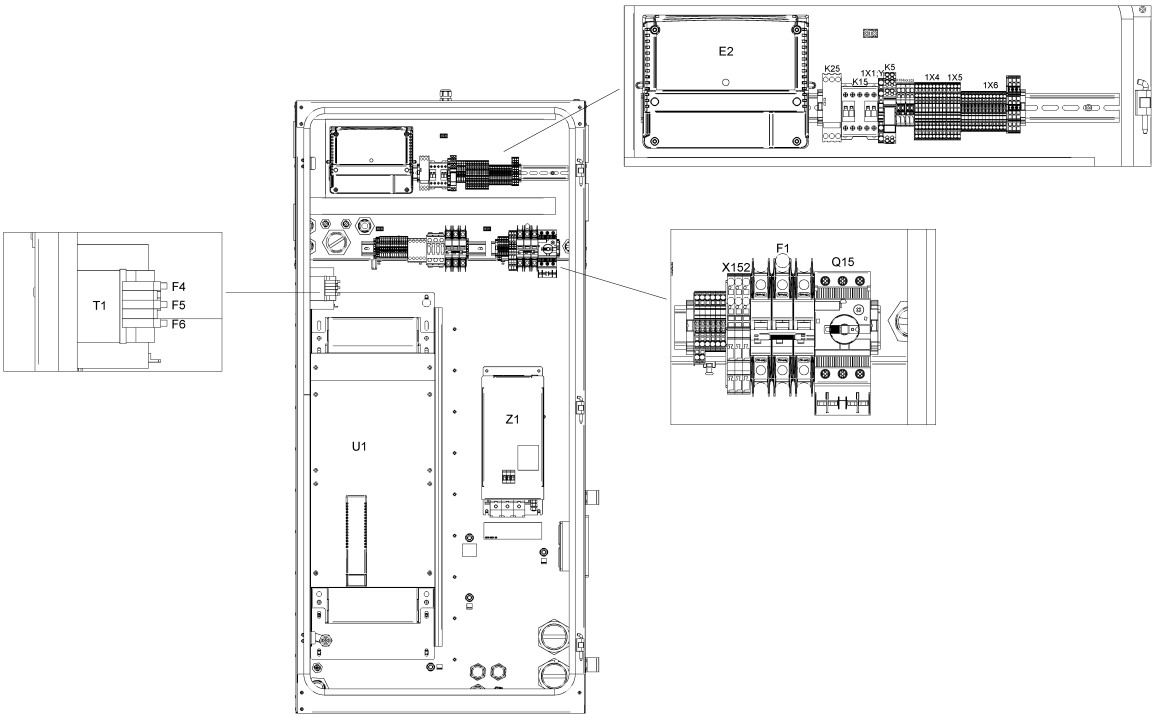
E2
K25
K15
1X1
K5
1X4
1X5
1X6
T1
F4
F5
F6
X152
F1
Q15
U1
Z1

21.18 - Cubicle components GA 90 VSD+ - (200V-400V-500V/50Hz, 460V/60Hz - IEC, 230V-460V-575V/60Hz - UL-cUL) - Full-Feature (12/12/2018 - 16/12/2019)

(((MOVOL:200V , MOVOL:400V , MOVOL:500V) + FREQ:50HZ , FREQ:60HZ + MOVOL:460V) + CAPPRE:IEC , (MOVOL:230V , MOVOL:460V , MOVOL:575V) + CAPPRE:ULCUL + FREQ:60HZ) + IDRY:Y + MODEL:GA90VP_16

Ref	Part Number	Qty	Name	Validity	EL
	Electrical legend:	Without trafo on dryer			
	1088 0031 13	1	CONNECTOR 13-POLE	**(12/12/2018 - 24/02/2019)** ((((CAPPRM:AS1210 , CAPPRM:CE , CAPPRM:MHLW , CAPPRM:MOM) + MOVOL:400V , (CAPPRM:CE + MOVOL:500V , CAPPRM:MHLW + MOVOL:200V) + COOL:AIR) + FREQ:50HZ , (CAPPRM:ASME , CAPPRM:MHLW) + FREQ:60HZ + MOVOL:460V) + CAPPRE:IEC , ((MOVOL:230V , MOVOL:575V) + COOL:AIR , MOVOL:460V) + CAPPRE:ULCUL + CAPPRM:ASME + FREQ:60HZ) **(25/02/2019 - 16/12/2019)** ((((CAPPRM:AS1210 , CAPPRM:CE , CAPPRM:MHLW , CAPPRM:MOM) + MOVOL:400V , CAPPRM:CE + MOVOL:500V , CAPPRM:MHLW + MOVOL:200V) + FREQ:50HZ , (CAPPRM:ASME , CAPPRM:MHLW) + FREQ:60HZ + MOVOL:460V) + CAPPRE:IEC , (MOVOL:230V , MOVOL:460V , MOVOL:575V) + CAPPRE:ULCUL + CAPPRM:ASME + FREQ:60HZ) + COOL:AIR	1X30
	1088 0037 82	1	CONNECTOR	**(12/12/2018 - 24/02/2019)** ((((CAPPRM:AS1210 , CAPPRM:CE , CAPPRM:MHLW , CAPPRM:MOM) + MOVOL:400V , (CAPPRM:CE + MOVOL:500V , CAPPRM:MHLW + MOVOL:200V) + COOL:AIR) + FREQ:50HZ , (CAPPRM:ASME , CAPPRM:MHLW) + FREQ:60HZ + MOVOL:460V) + CAPPRE:IEC , ((MOVOL:230V , MOVOL:575V) + COOL:AIR , MOVOL:460V) + CAPPRE:ULCUL + CAPPRM:ASME + FREQ:60HZ) **(25/02/2019 - 16/12/2019)** ((((CAPPRM:AS1210 , CAPPRM:CE , CAPPRM:MHLW , CAPPRM:MOM) + MOVOL:400V , CAPPRM:CE + MOVOL:500V , CAPPRM:MHLW + MOVOL:200V) + FREQ:50HZ , (CAPPRM:ASME , CAPPRM:MHLW) + FREQ:60HZ + MOVOL:460V) + CAPPRE:IEC , (MOVOL:230V , MOVOL:460V , MOVOL:575V) + CAPPRE:ULCUL + CAPPRM:ASME + FREQ:60HZ) + COOL:AIR	3X34
	0697 9811 13	1	PLUG	**(12/12/2018 - 24/02/2019)** ((((CAPPRM:AS1210 , CAPPRM:CE , CAPPRM:MHLW , CAPPRM:MOM) + MOVOL:400V , (CAPPRM:CE + MOVOL:500V , CAPPRM:MHLW + MOVOL:200V) + COOL:AIR) + FREQ:50HZ , (CAPPRM:ASME , CAPPRM:MHLW) + FREQ:60HZ + MOVOL:460V) + CAPPRE:IEC , ((MOVOL:230V , MOVOL:575V) + COOL:AIR , MOVOL:460V) + CAPPRE:ULCUL + CAPPRM:ASME + FREQ:60HZ) **(25/02/2019 - 16/12/2019)** ((((CAPPRM:AS1210 , CAPPRM:CE , CAPPRM:MHLW , CAPPRM:MOM) + MOVOL:400V , CAPPRM:CE + MOVOL:500V , CAPPRM:MHLW + MOVOL:200V) + FREQ:50HZ , (CAPPRM:ASME , CAPPRM:MHLW) + FREQ:60HZ + MOVOL:460V) + CAPPRE:IEC , (MOVOL:230V , MOVOL:460V , MOVOL:575V) + CAPPRE:ULCUL + CAPPRM:ASME + FREQ:60HZ) + COOL:AIR	
	Electrical legend:	Energy recovery			

Legend:

CAPPRE:IEC - Component approval electrical:IEC	CAPPRE:ULCUL - Component approval electrical:UL/cUL	CAPPRM:AS1210 - Component approval mechanical:AS1210
CAPPRM:ASME - Component approval mechanical:ASME	CAPPRM:CE - Component approval mechanical:CE	CAPPRM:MHLW - Component approval mechanical:MHLW
CAPPRM:MOM - Component approval mechanical:MOM	COOL:AIR - Cooling:Air cooled	FREQ:50HZ - Frequency:50 Hz
FREQ:60HZ - Frequency:60 Hz	IDRY:Y - Integrated dryer:Yes	MODEL:GA90VP_16 - Model:GA 90VSD+
MOVOL:200V - Supply voltage:200 V	MOVOL:230V - Supply voltage:230 V	MOVOL:400V - Supply voltage:400 V
MOVOL:460V - Supply voltage:460 V	MOVOL:500V - Supply voltage:500 V	MOVOL:575V - Supply voltage:575 V

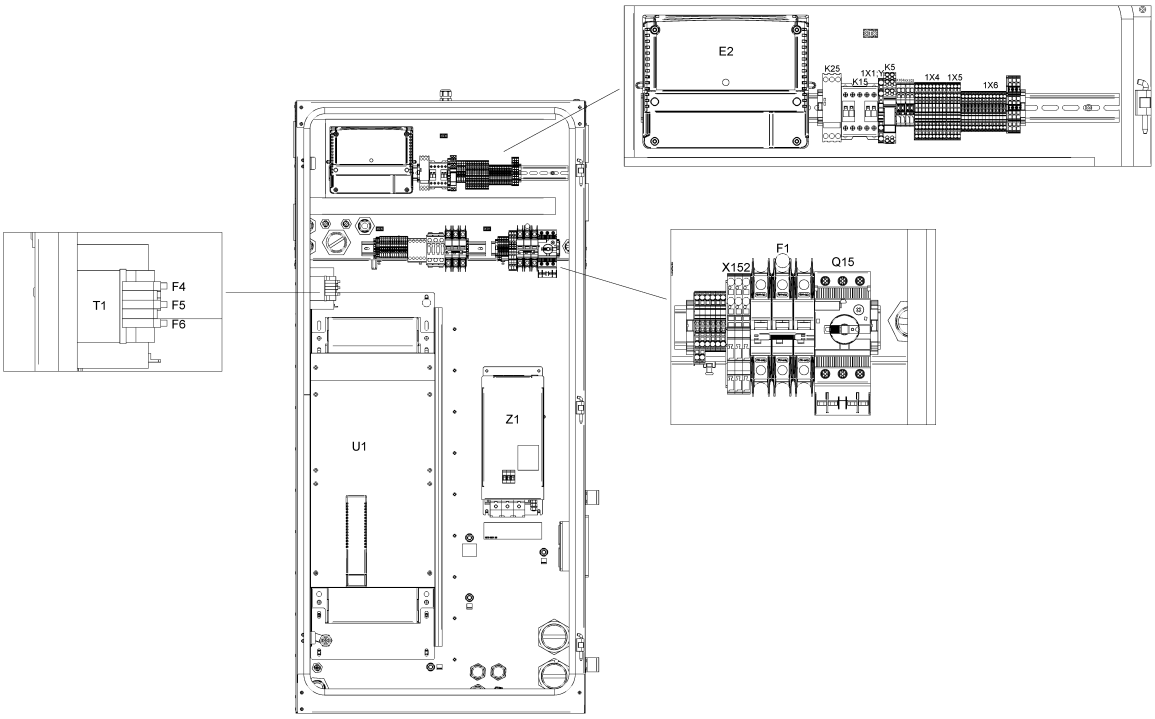
E2
K25
K15
1X1
K5
1X4
1X5
1X6
T1
F4
F5
F6
X152
F1
Q15
U1
Z1

21.18 - Cubicle components GA 90 VSD+ - (200V-400V-500V/50Hz, 460V/60Hz - IEC, 230V-460V-575V/60Hz - UL-cUL) - Full-Feature (12/12/2018 - 16/12/2019)

(((MOVOL:200V , MOVOL:400V , MOVOL:500V) + FREQ:50HZ , FREQ:60HZ + MOVOL:460V) + CAPPRE:IEC , (MOVOL:230V , MOVOL:460V , MOVOL:575V) + CAPPRE:ULCUL + FREQ:60HZ) + IDRY:Y + MODEL:GA90VP_16

Ref	Part Number	Qty	Name	Validity	EL
	0989 3700 44	1	LOCKNUT	**(12/12/2018 - 24/02/2019)** ((((CAPPRM:AS1210 , CAPPRM:CE , CAPPRM:MHLW , CAPPRM:MOM) + MOVOL:400V , (CAPPRM:CE + MOVOL:500V , CAPPRM:MHLW + MOVOL:200V) + COOL:AIR) + FREQ:50HZ , (CAPPRM:ASME , CAPPRM:MHLW) + FREQ:60HZ + MOVOL:460V) + CAPPRE:IEC , ((MOVOL:230V , MOVOL:575V) + COOL:AIR , MOVOL:460V) + CAPPRE:ULCUL + CAPPRM:ASME + FREQ:60HZ) **(25/02/2019 - 16/12/2019)** ((((CAPPRM:AS1210 , CAPPRM:CE , CAPPRM:MHLW , CAPPRM:MOM) + MOVOL:400V , CAPPRM:CE + MOVOL:500V , CAPPRM:MHLW + MOVOL:200V) + FREQ:50HZ , (CAPPRM:ASME , CAPPRM:MHLW) + FREQ:60HZ + MOVOL:460V) + CAPPRE:IEC , (MOVOL:230V , MOVOL:460V , MOVOL:575V) + CAPPRE:ULCUL + CAPPRM:ASME + FREQ:60HZ) + COOL:AIR	
	Electrical legend:	Energy recovery			
	0697 9811 12	1	PLUG	**(12/12/2018 - 24/02/2019)** ((((CAPPRM:AS1210 , CAPPRM:CE , CAPPRM:MHLW , CAPPRM:MOM) + MOVOL:400V , (CAPPRM:CE + MOVOL:500V , CAPPRM:MHLW + MOVOL:200V) + COOL:AIR) + FREQ:50HZ , (CAPPRM:ASME , CAPPRM:MHLW) + FREQ:60HZ + MOVOL:460V) + CAPPRE:IEC , ((MOVOL:230V , MOVOL:575V) + COOL:AIR , MOVOL:460V) + CAPPRE:ULCUL + CAPPRM:ASME + FREQ:60HZ) **(25/02/2019 - 16/12/2019)** ((((CAPPRM:AS1210 , CAPPRM:CE , CAPPRM:MHLW , CAPPRM:MOM) + MOVOL:400V , CAPPRM:CE + MOVOL:500V , CAPPRM:MHLW + MOVOL:200V) + FREQ:50HZ , (CAPPRM:ASME , CAPPRM:MHLW) + FREQ:60HZ + MOVOL:460V) + CAPPRE:IEC , (MOVOL:230V , MOVOL:460V , MOVOL:575V) + CAPPRE:ULCUL + CAPPRM:ASME + FREQ:60HZ) + COOL:AIR	
	Electrical legend:	Control circuit of T10			
	0989 3700 43	1	NUT	**(12/12/2018 - 24/02/2019)** ((((CAPPRM:AS1210 , CAPPRM:CE , CAPPRM:MHLW , CAPPRM:MOM) + MOVOL:400V , (CAPPRM:CE + MOVOL:500V , CAPPRM:MHLW + MOVOL:200V) + COOL:AIR) + FREQ:50HZ , (CAPPRM:ASME , CAPPRM:MHLW) + FREQ:60HZ + MOVOL:460V) + CAPPRE:IEC , ((MOVOL:230V , MOVOL:575V) + COOL:AIR , MOVOL:460V) + CAPPRE:ULCUL + CAPPRM:ASME + FREQ:60HZ) **(25/02/2019 - 16/12/2019)** ((((CAPPRM:AS1210 , CAPPRM:CE , CAPPRM:MHLW , CAPPRM:MOM) + MOVOL:400V , CAPPRM:CE + MOVOL:500V , CAPPRM:MHLW + MOVOL:200V) + FREQ:50HZ , (CAPPRM:ASME , CAPPRM:MHLW) + FREQ:60HZ + MOVOL:460V) + CAPPRE:IEC , (MOVOL:230V , MOVOL:460V , MOVOL:575V) + CAPPRE:ULCUL + CAPPRM:ASME + FREQ:60HZ) + COOL:AIR	
	Electrical legend:	Control circuit of T10			

Legend:

CAPPRE:IEC - Component approval electrical:IEC
CAPPRE:ULCUL - Component approval electrical:UL/cUL
CAPPRM:AS1210 - Component approval mechanical:AS1210
CAPPRM:ASME - Component approval mechanical:ASME
CAPPRM:CE - Component approval mechanical:CE
CAPPRM:MHLW - Component approval mechanical:MHLW
CAPPRM:MOM - Component approval mechanical:MOM
COOL:AIR - Cooling:Air cooled
FREQ:50HZ - Frequency:50 Hz
FREQ:60HZ - Frequency:60 Hz
IDRY:Y - Integrated dryer:Yes
MODEL:GA90VP_16 - Model:GA 90VSD+
MOVOL:200V - Supply voltage:200 V
MOVOL:230V - Supply voltage:230 V
MOVOL:400V - Supply voltage:400 V
MOVOL:460V - Supply voltage:460 V
MOVOL:500V - Supply voltage:500 V
MOVOL:575V - Supply voltage:575 V

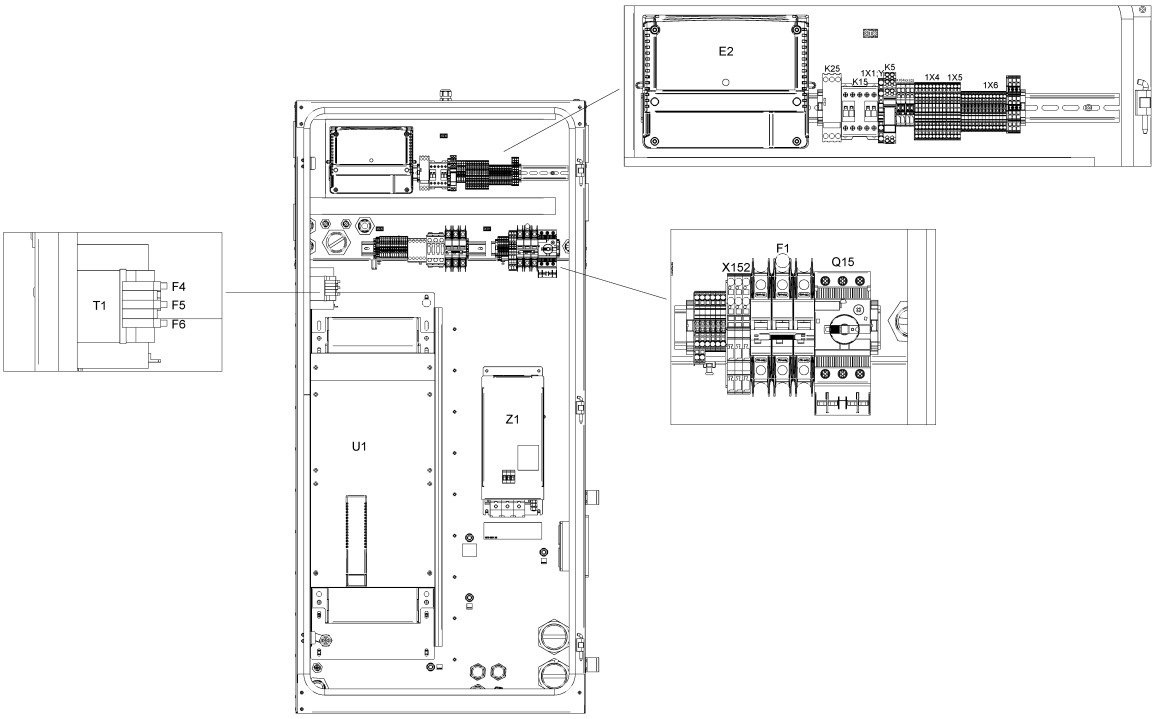
E2
K25
K15
1X1
K5
1X4
1X5
1X6
T1
F4
F5
F6
X152
F1
Q15
U1
Z1

Ref	Part Number	Qty	Name	Validity	EL
	0697 9811 10	1	PLUG	**(12/12/2018 - 24/02/2019)** ((((CAPPRM:AS1210 , CAPPRM:CE , CAPPRM:MHLW , CAPPRM:MOM) + MOVOL:400V , (CAPPRM:CE + MOVOL:500V , CAPPRM:MHLW + MOVOL:200V) + COOL:AIR) + FREQ:50HZ , (CAPPRM:ASME , CAPPRM:MHLW) + FREQ:60HZ + MOVOL:460V) + CAPPRE:IEC , ((MOVOL:230V , MOVOL:575V) + COOL:AIR , MOVOL:460V) + CAPPRE:ULCUL + CAPPRM:ASME + FREQ:60HZ) **(25/02/2019 - 16/12/2019)** ((((CAPPRM:AS1210 , CAPPRM:CE , CAPPRM:MHLW , CAPPRM:MOM) + MOVOL:400V , CAPPRM:CE + MOVOL:500V , CAPPRM:MHLW + MOVOL:200V) + FREQ:50HZ , (CAPPRM:ASME , CAPPRM:MHLW) + FREQ:60HZ + MOVOL:460V) + CAPPRE:IEC , (MOVOL:230V , MOVOL:460V , MOVOL:575V) + CAPPRE:ULCUL + CAPPRM:ASME + FREQ:60HZ) + COOL:AIR	
	Electrical legend:	Plug for smartbox hole			
	0989 3700 41	1	LOCKNUT	**(12/12/2018 - 24/02/2019)** ((((CAPPRM:AS1210 , CAPPRM:CE , CAPPRM:MHLW , CAPPRM:MOM) + MOVOL:400V , (CAPPRM:CE + MOVOL:500V , CAPPRM:MHLW + MOVOL:200V) + COOL:AIR) + FREQ:50HZ , (CAPPRM:ASME , CAPPRM:MHLW) + FREQ:60HZ + MOVOL:460V) + CAPPRE:IEC , ((MOVOL:230V , MOVOL:575V) + COOL:AIR , MOVOL:460V) + CAPPRE:ULCUL + CAPPRM:ASME + FREQ:60HZ) **(25/02/2019 - 16/12/2019)** ((((CAPPRM:AS1210 , CAPPRM:CE , CAPPRM:MHLW , CAPPRM:MOM) + MOVOL:400V , CAPPRM:CE + MOVOL:500V , CAPPRM:MHLW + MOVOL:200V) + FREQ:50HZ , (CAPPRM:ASME , CAPPRM:MHLW) + FREQ:60HZ + MOVOL:460V) + CAPPRE:IEC , (MOVOL:230V , MOVOL:460V , MOVOL:575V) + CAPPRE:ULCUL + CAPPRM:ASME + FREQ:60HZ) + COOL:AIR	
	Electrical legend:	Nut for smartbox hole			

Legend:

CAPPRE:IEC - Component approval electrical:IEC
CAPPRE:ULCUL - Component approval electrical:UL/cUL
CAPPRM:AS1210 - Component approval mechanical:AS1210
CAPPRM:ASME - Component approval mechanical:ASME
CAPPRM:CE - Component approval mechanical:CE
CAPPRM:MHLW - Component approval mechanical:MHLW
CAPPRM:MOM - Component approval mechanical:MOM
COOL:AIR - Cooling:Air cooled
FREQ:50HZ - Frequency:50 Hz
FREQ:60HZ - Frequency:60 Hz
IDRY:Y - Integrated dryer:Yes
MODEL:GA90VP_16 - Model:GA 90VSD+
MOVOL:200V - Supply voltage:200 V
MOVOL:230V - Supply voltage:230 V
MOVOL:400V - Supply voltage:400 V
MOVOL:460V - Supply voltage:460 V
MOVOL:500V - Supply voltage:500 V
MOVOL:575V - Supply voltage:575 V

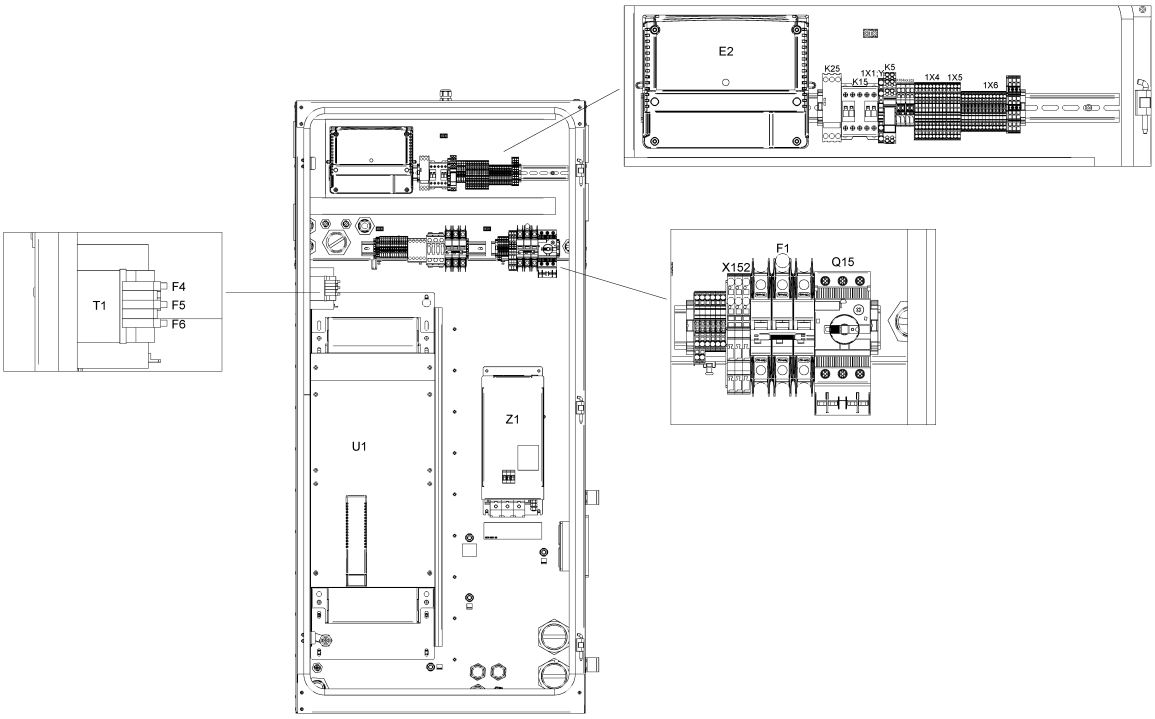
E2
K25
K15
1X1
K5
1X4
1X5
1X6
T1
F4
F5
F6
X152
F1
Q15
U1
Z1

21.19 - Cubicle components GA 90 VSD+ - (200V-400V-500V/50Hz, 460V/60Hz - IEC, 230V-460V-575V/60Hz - UL-cUL) - Full-Feature (17/12/2019 - ...)

(((MOVOL:200V , MOVOL:400V , MOVOL:500V) + FREQ:50HZ , FREQ:60HZ + MOVOL:460V) + CAPPRE:IEC , (MOVOL:230V , MOVOL:460V , MOVOL:575V) + CAPPRE:ULCUL + FREQ:60HZ) + IDRY:Y + MODEL:GA90VP_16

Ref	Part Number	Qty	Name	Validity	EL
	1900 2202 50	1	CUBICLE	**(17/12/2019 - ...)**	
	9820 3000 31	1	ASSEMBLY DRAWING	**(25/02/2019 - 16/12/2019)** (((CAPPRM:AS1210 , CAPPRM:CE , CAPPRM:MHLW , CAPPRM:MOM) + FREQ:50HZ + MOVOL:400V , (CAPPRM:ASME , CAPPRM:MHLW) + FREQ:60HZ + MOVOL:460V) + CAPPRE:IEC , CAPPRE:ULCUL + CAPPRM:ASME + FREQ:60HZ + MOVOL:460V) + COOL:WATER **(17/12/2019 - ...)** ((((CAPPRM:AS1210 , CAPPRM:CE , CAPPRM:MHLW , CAPPRM:MOM) + MOVOL:400V , (CAPPRM:CE + MOVOL:500V , CAPPRM:MHLW + MOVOL:200V) + COOL:AIR) + FREQ:50HZ , (CAPPRM:ASME , CAPPRM:MHLW) + FREQ:60HZ + MOVOL:460V) + CAPPRE:IEC , ((MOVOL:230V , MOVOL:575V) + COOL:AIR , MOVOL:460V) + CAPPRE:ULCUL + CAPPRM:ASME + FREQ:60HZ)	AD
	9820 3000 27	1	SERVICE DIAGRAM	**(25/02/2019 - 16/12/2019)** (((CAPPRM:AS1210 , CAPPRM:CE , CAPPRM:MHLW , CAPPRM:MOM) + FREQ:50HZ + MOVOL:400V , (CAPPRM:ASME , CAPPRM:MHLW) + FREQ:60HZ + MOVOL:460V) + CAPPRE:IEC , CAPPRE:ULCUL + CAPPRM:ASME + FREQ:60HZ + MOVOL:460V) + COOL:WATER **(17/12/2019 - ...)** ((((CAPPRM:AS1210 , CAPPRM:CE , CAPPRM:MHLW , CAPPRM:MOM) + MOVOL:400V , (CAPPRM:CE + MOVOL:500V , CAPPRM:MHLW + MOVOL:200V) + COOL:AIR) + FREQ:50HZ , (CAPPRM:ASME , CAPPRM:MHLW) + FREQ:60HZ + MOVOL:460V) + CAPPRE:IEC , ((MOVOL:230V , MOVOL:575V) + COOL:AIR , MOVOL:460V) + CAPPRE:ULCUL + CAPPRM:ASME + FREQ:60HZ)	SD
	1622 3798 72	1	WIRE HARNESS	**(25/02/2019 - 16/12/2019)** (((CAPPRM:AS1210 , CAPPRM:CE , CAPPRM:MHLW , CAPPRM:MOM) + FREQ:50HZ + MOVOL:400V , (CAPPRM:ASME , CAPPRM:MHLW) + FREQ:60HZ + MOVOL:460V) + CAPPRE:IEC , CAPPRE:ULCUL + CAPPRM:ASME + FREQ:60HZ + MOVOL:460V) + COOL:WATER **(17/12/2019 - ...)** ((((CAPPRM:AS1210 , CAPPRM:CE , CAPPRM:MHLW , CAPPRM:MOM) + MOVOL:400V , (CAPPRM:CE + MOVOL:500V , CAPPRM:MHLW + MOVOL:200V) + COOL:AIR) + FREQ:50HZ , (CAPPRM:ASME , CAPPRM:MHLW) + FREQ:60HZ + MOVOL:460V) + CAPPRE:IEC , ((MOVOL:230V , MOVOL:575V) + COOL:AIR , MOVOL:460V) + CAPPRE:ULCUL + CAPPRM:ASME + FREQ:60HZ)	Comm Cable
	1622 5099 04	1	DI CHANE CABLE (1400MM)	**(25/02/2019 - 16/12/2019)** (((CAPPRM:AS1210 , CAPPRM:CE , CAPPRM:MHLW , CAPPRM:MOM) + FREQ:50HZ + MOVOL:400V , (CAPPRM:ASME , CAPPRM:MHLW) + FREQ:60HZ + MOVOL:460V) + CAPPRE:IEC , CAPPRE:ULCUL + CAPPRM:ASME + FREQ:60HZ + MOVOL:460V) + COOL:WATER **(17/12/2019 - ...)** ((((CAPPRM:AS1210 , CAPPRM:CE , CAPPRM:MHLW , CAPPRM:MOM) + MOVOL:400V , (CAPPRM:CE + MOVOL:500V , CAPPRM:MHLW + MOVOL:200V) + COOL:AIR) + FREQ:50HZ , (CAPPRM:ASME , CAPPRM:MHLW) + FREQ:60HZ + MOVOL:460V) + CAPPRE:IEC , ((MOVOL:230V , MOVOL:575V) + COOL:AIR , MOVOL:460V) + CAPPRE:ULCUL + CAPPRM:ASME + FREQ:60HZ)	

Electrical legend: Comm Cable Loose supply

Legend:

CAPPRE:IEC - Component approval electrical:IEC
CAPPRE:ULCUL - Component approval electrical:UL/cUL
CAPPRM:AS1210 - Component approval mechanical:AS1210
CAPPRM:ASME - Component approval mechanical:ASME
CAPPRM:CE - Component approval mechanical:CE
CAPPRM:MHLW - Component approval mechanical:MHLW
CAPPRM:MOM - Component approval mechanical:MOM
COOL:AIR - Cooling:Air cooled
COOL:WATER - Cooling:Water cooled
FREQ:50HZ - Frequency:50 Hz
FREQ:60HZ - Frequency:60 Hz
IDRY:Y - Integrated dryer:Yes
MODEL:GA90VP_16 - Model:GA 90VSD+
MOVOL:200V - Supply voltage:200 V
MOVOL:230V - Supply voltage:230 V
MOVOL:400V - Supply voltage:400 V
MOVOL:460V - Supply voltage:460 V
MOVOL:500V - Supply voltage:500 V
MOVOL:575V - Supply voltage:575 V

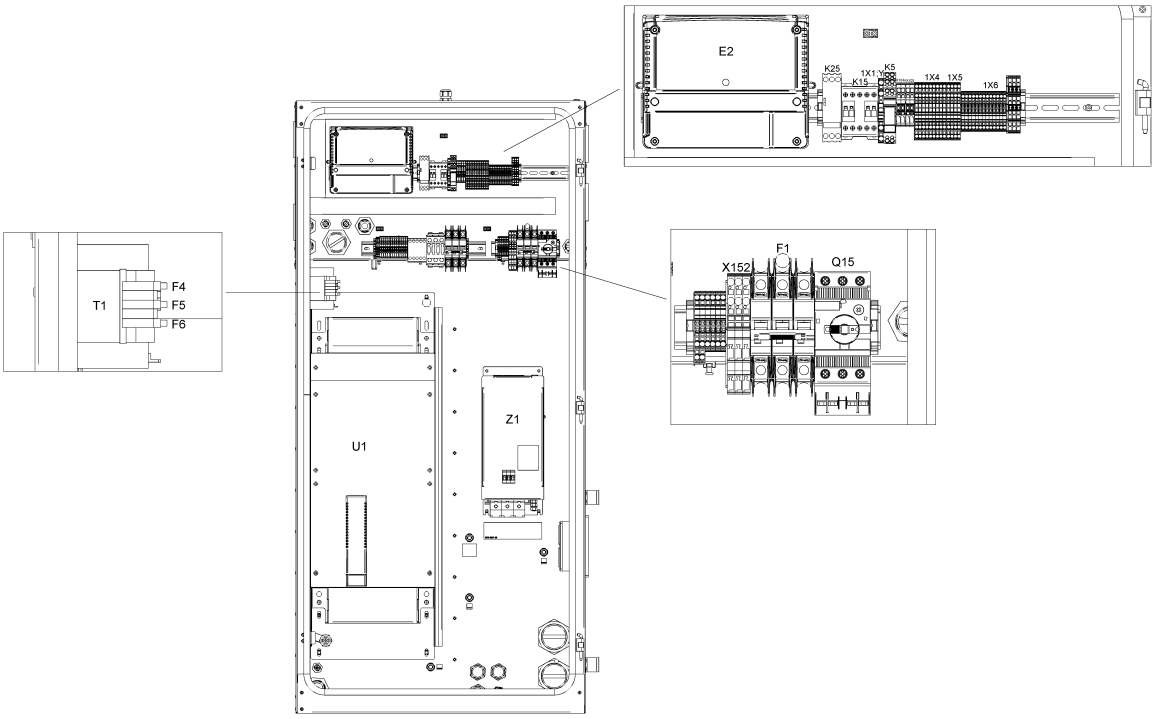
E2
K25
K15
1X1
K5
1X4
1X5
1X6
T1
F4
F5
F6
X152
F1
Q15
U1
Z1

21.19 - Cubicle components GA 90 VSD+ - (200V-400V-500V/50Hz, 460V/60Hz - IEC, 230V-460V-575V/60Hz - UL-cUL) - Full-Feature (17/12/2019 - ...)

(((MOVOL:200V , MOVOL:400V , MOVOL:500V) + FREQ:50HZ , FREQ:60HZ + MOVOL:460V) + CAPPRE:IEC , (MOVOL:230V , MOVOL:460V , MOVOL:575V) + CAPPRE:ULCUL + FREQ:60HZ) + IDRY:Y + MODEL:GA90VP_16

Ref	Part Number	Qty	Name	Validity	EL
	1649 8006 00	1	CUBICLE	**(25/02/2019 - 16/12/2019)** (((CAPPRM:AS1210 , CAPPRM:CE , CAPPRM:MHLW , CAPPRM:MOM) + FREQ:50HZ + MOVOL:400V , (CAPPRM:ASME , CAPPRM:MHLW) + FREQ:60HZ + MOVOL:460V) + CAPPRE:IEC , CAPPRE:ULCUL + CAPPRM:ASME + FREQ:60HZ + MOVOL:460V) + COOL:WATER **(17/12/2019 - ...)** ((((CAPPRM:AS1210 , CAPPRM:CE , CAPPRM:MHLW , CAPPRM:MOM) + MOVOL:400V , (CAPPRM:CE + MOVOL:500V , CAPPRM:MHLW + MOVOL:200V) + COOL:AIR) + FREQ:50HZ , (CAPPRM:ASME , CAPPRM:MHLW) + FREQ:60HZ + MOVOL:460V) + CAPPRE:IEC , ((MOVOL:230V , MOVOL:575V) + COOL:AIR , MOVOL:460V) + CAPPRE:ULCUL + CAPPRM:ASME + FREQ:60HZ)	MSA
	1649 8001 32	1	PLATE NEOS "D"	**(25/02/2019 - 16/12/2019)** (((CAPPRM:AS1210 , CAPPRM:CE , CAPPRM:MHLW , CAPPRM:MOM) + FREQ:50HZ + MOVOL:400V , (CAPPRM:ASME , CAPPRM:MHLW) + FREQ:60HZ + MOVOL:460V) + CAPPRE:IEC , CAPPRE:ULCUL + CAPPRM:ASME + FREQ:60HZ + MOVOL:460V) + COOL:WATER **(17/12/2019 - ...)** ((((CAPPRM:AS1210 , CAPPRM:CE , CAPPRM:MHLW , CAPPRM:MOM) + MOVOL:400V , (CAPPRM:CE + MOVOL:500V , CAPPRM:MHLW + MOVOL:200V) + COOL:AIR) + FREQ:50HZ , (CAPPRM:ASME , CAPPRM:MHLW) + FREQ:60HZ + MOVOL:460V) + CAPPRE:IEC , ((MOVOL:230V , MOVOL:575V) + COOL:AIR , MOVOL:460V) + CAPPRE:ULCUL + CAPPRM:ASME + FREQ:60HZ)	
	Electrical legend:	Mounting plate			
	1649 8003 85	1	MOUNTING PLATE	**(25/02/2019 - 16/12/2019)** (((CAPPRM:AS1210 , CAPPRM:CE , CAPPRM:MHLW , CAPPRM:MOM) + FREQ:50HZ + MOVOL:400V , (CAPPRM:ASME , CAPPRM:MHLW) + FREQ:60HZ + MOVOL:460V) + CAPPRE:IEC , CAPPRE:ULCUL + CAPPRM:ASME + FREQ:60HZ + MOVOL:460V) + COOL:WATER **(17/12/2019 - ...)** ((((CAPPRM:AS1210 , CAPPRM:CE , CAPPRM:MHLW , CAPPRM:MOM) + MOVOL:400V , (CAPPRM:CE + MOVOL:500V , CAPPRM:MHLW + MOVOL:200V) + COOL:AIR) + FREQ:50HZ , (CAPPRM:ASME , CAPPRM:MHLW) + FREQ:60HZ + MOVOL:460V) + CAPPRE:IEC , ((MOVOL:230V , MOVOL:575V) + COOL:AIR , MOVOL:460V) + CAPPRE:ULCUL + CAPPRM:ASME + FREQ:60HZ)	
	Electrical legend:	Mounting plate			
	1649 8002 39	1	WIRE HARNESS	**(25/02/2019 - 16/12/2019)** (((CAPPRM:AS1210 , CAPPRM:CE , CAPPRM:MHLW , CAPPRM:MOM) + FREQ:50HZ + MOVOL:400V , (CAPPRM:ASME , CAPPRM:MHLW) + FREQ:60HZ + MOVOL:460V) + CAPPRE:IEC , CAPPRE:ULCUL + CAPPRM:ASME + FREQ:60HZ + MOVOL:460V) + COOL:WATER **(17/12/2019 - ...)** ((((CAPPRM:AS1210 , CAPPRM:CE , CAPPRM:MHLW , CAPPRM:MOM) + MOVOL:400V , (CAPPRM:CE + MOVOL:500V , CAPPRM:MHLW + MOVOL:200V) + COOL:AIR) + FREQ:50HZ , (CAPPRM:ASME , CAPPRM:MHLW) + FREQ:60HZ + MOVOL:460V) + CAPPRE:IEC , ((MOVOL:230V , MOVOL:575V) + COOL:AIR , MOVOL:460V) + CAPPRE:ULCUL + CAPPRM:ASME + FREQ:60HZ)	WH

Legend:

CAPPRE:IEC - Component approval electrical:IEC
CAPPRM:ASME - Component approval mechanical:ASME
CAPPRM:MOM - Component approval mechanical:MOM
FREQ:50HZ - Frequency:50 Hz
MODEL:GA90VP_16 - Model:GA 90VSD+
MOVOL:400V - Supply voltage:400 V
MOVOL:575V - Supply voltage:575 V
CAPPRE:ULCUL - Component approval electrical:UL/cUL
CAPPRM:CE - Component approval mechanical:CE
COOL:AIR - Cooling:Air cooled
FREQ:60HZ - Frequency:60 Hz
MOVOL:200V - Supply voltage:200 V
MOVOL:460V - Supply voltage:460 V
CAPPRM:AS1210 - Component approval mechanical:AS1210
CAPPRM:MHLW - Component approval mechanical:MHLW
COOL:WATER - Cooling:Water cooled
IDRY:Y - Integrated dryer:Yes
MOVOL:230V - Supply voltage:230 V
MOVOL:500V - Supply voltage:500 V

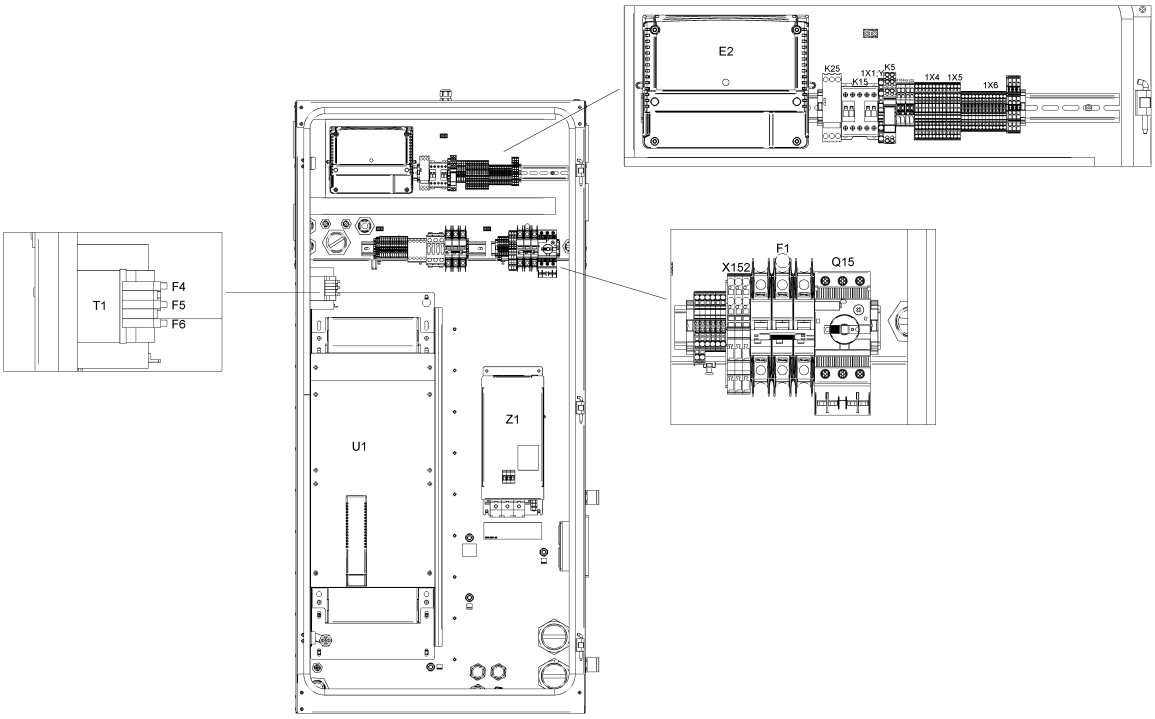
E2
K25
K15
1X1
K5
1X4
1X5
1X6
T1
F4
F5
F6
X152
F1
Q15
U1
Z1

Ref	Part Number	Qty	Name	Validity	EL
	1649 8002 40	1	WIRE HARNESS	**(25/02/2019 - 16/12/2019)** (((CAPPRM:AS1210 , CAPPRM:CE , CAPPRM:MHLW , CAPPRM:MOM) + FREQ:50HZ + MOVOL:400V , (CAPPRM:ASME , CAPPRM:MHLW) + FREQ:60HZ + MOVOL:460V) + CAPPRE:IEC , CAPPRE:ULCUL + CAPPRM:ASME + FREQ:60HZ + MOVOL:460V) + COOL:WATER **(17/12/2019 - ...)** ((((CAPPRM:AS1210 , CAPPRM:CE , CAPPRM:MHLW , CAPPRM:MOM) + MOVOL:400V , (CAPPRM:CE + MOVOL:500V , CAPPRM:MHLW + MOVOL:200V) + COOL:AIR) + FREQ:50HZ , (CAPPRM:ASME , CAPPRM:MHLW) + FREQ:60HZ + MOVOL:460V) + CAPPRE:IEC , ((MOVOL:230V , MOVOL:575V) + COOL:AIR , MOVOL:460V) + CAPPRE:ULCUL + CAPPRM:ASME + FREQ:60HZ)	WH
	1649 8002 72	1	CABLE POWER	**(25/02/2019 - 16/12/2019)** (((CAPPRM:AS1210 , CAPPRM:CE , CAPPRM:MHLW , CAPPRM:MOM) + FREQ:50HZ + MOVOL:400V , (CAPPRM:ASME , CAPPRM:MHLW) + FREQ:60HZ + MOVOL:460V) + CAPPRE:IEC , CAPPRE:ULCUL + CAPPRM:ASME + FREQ:60HZ + MOVOL:460V) + COOL:WATER **(17/12/2019 - ...)** ((((CAPPRM:AS1210 , CAPPRM:CE , CAPPRM:MHLW , CAPPRM:MOM) + MOVOL:400V , (CAPPRM:CE + MOVOL:500V , CAPPRM:MHLW + MOVOL:200V) + COOL:AIR) + FREQ:50HZ , (CAPPRM:ASME , CAPPRM:MHLW) + FREQ:60HZ + MOVOL:460V) + CAPPRE:IEC , ((MOVOL:230V , MOVOL:575V) + COOL:AIR , MOVOL:460V) + CAPPRE:ULCUL + CAPPRM:ASME + FREQ:60HZ)	
	Electrical legend:	Full feature (FF) Drain			
	1649 8002 73	1	WIRE HARNESS	**(25/02/2019 - 16/12/2019)** (((CAPPRM:AS1210 , CAPPRM:CE , CAPPRM:MHLW , CAPPRM:MOM) + FREQ:50HZ + MOVOL:400V , (CAPPRM:ASME , CAPPRM:MHLW) + FREQ:60HZ + MOVOL:460V) + CAPPRE:IEC , CAPPRE:ULCUL + CAPPRM:ASME + FREQ:60HZ + MOVOL:460V) + COOL:WATER **(17/12/2019 - ...)** ((((CAPPRM:AS1210 , CAPPRM:CE , CAPPRM:MHLW , CAPPRM:MOM) + MOVOL:400V , (CAPPRM:CE + MOVOL:500V , CAPPRM:MHLW + MOVOL:200V) + COOL:AIR) + FREQ:50HZ , (CAPPRM:ASME , CAPPRM:MHLW) + FREQ:60HZ + MOVOL:460V) + CAPPRE:IEC , ((MOVOL:230V , MOVOL:575V) + COOL:AIR , MOVOL:460V) + CAPPRE:ULCUL + CAPPRM:ASME + FREQ:60HZ)	
	Electrical legend:	Pack Drain + Air filter switch			
	1649 8002 75	1	WIRE HARNESS	**(25/02/2019 - 16/12/2019)** (((CAPPRM:AS1210 , CAPPRM:CE , CAPPRM:MHLW , CAPPRM:MOM) + FREQ:50HZ + MOVOL:400V , (CAPPRM:ASME , CAPPRM:MHLW) + FREQ:60HZ + MOVOL:460V) + CAPPRE:IEC , CAPPRE:ULCUL + CAPPRM:ASME + FREQ:60HZ + MOVOL:460V) + COOL:WATER **(17/12/2019 - ...)** ((((CAPPRM:AS1210 , CAPPRM:CE , CAPPRM:MHLW , CAPPRM:MOM) + MOVOL:400V , (CAPPRM:CE + MOVOL:500V , CAPPRM:MHLW + MOVOL:200V) + COOL:AIR) + FREQ:50HZ , (CAPPRM:ASME , CAPPRM:MHLW) + FREQ:60HZ + MOVOL:460V) + CAPPRE:IEC , ((MOVOL:230V , MOVOL:575V) + COOL:AIR , MOVOL:460V) + CAPPRE:ULCUL + CAPPRM:ASME + FREQ:60HZ)	
	Electrical legend:	Relative Humidity sensor			

Legend:

CAPPRE:IEC - Component approval electrical:IEC
CAPPRM:ASME - Component approval mechanical:ASME
CAPPRM:MOM - Component approval mechanical:MOM
FREQ:50HZ - Frequency:50 Hz
MODEL:GA90VP_16 - Model:GA 90VSD+
MOVOL:400V - Supply voltage:400 V
MOVOL:575V - Supply voltage:575 V
CAPPRE:ULCUL - Component approval electrical:UL/cUL
CAPPRM:CE - Component approval mechanical:CE
COOL:AIR - Cooling:Air cooled
FREQ:60HZ - Frequency:60 Hz
MOVOL:200V - Supply voltage:200 V
MOVOL:460V - Supply voltage:460 V
CAPPRM:AS1210 - Component approval mechanical:AS1210
CAPPRM:MHLW - Component approval mechanical:MHLW
COOL:WATER - Cooling:Water cooled
IDRY:Y - Integrated dryer:Yes
MOVOL:230V - Supply voltage:230 V
MOVOL:500V - Supply voltage:500 V

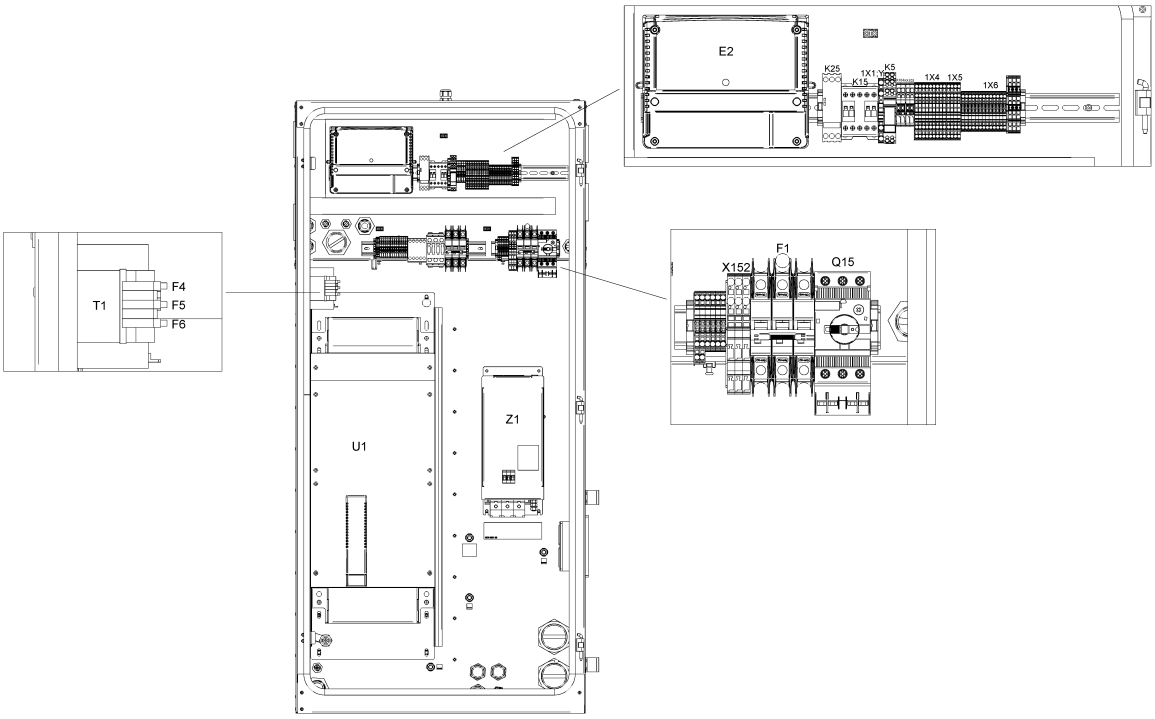
E2
K25
K15
1X1
K5
1X4
1X5
1X6
T1
F4
F5
F6
X152
F1
Q15
U1
Z1

21.19 - Cubicle components GA 90 VSD+ - (200V-400V-500V/50Hz, 460V/60Hz - IEC, 230V-460V-575V/60Hz - UL-cUL) - Full-Feature (17/12/2019 - ...)

(((MOVOL:200V , MOVOL:400V , MOVOL:500V) + FREQ:50HZ , FREQ:60HZ + MOVOL:460V) + CAPPRE:IEC , (MOVOL:230V , MOVOL:460V , MOVOL:575V) + CAPPRE:ULCUL + FREQ:60HZ) + IDRY:Y + MODEL:GA90VP_16

Ref	Part Number	Qty	Name	Validity	EL
	1649 8001 44	3	MOTOR CABLE	**(25/02/2019 - 16/12/2019)** (((CAPPRM:AS1210 , CAPPRM:CE , CAPPRM:MHLW , CAPPRM:MOM) + FREQ:50HZ + MOVOL:400V , (CAPPRM:ASME , CAPPRM:MHLW) + FREQ:60HZ + MOVOL:460V) + CAPPRE:IEC , CAPPRE:ULCUL + CAPPRM:ASME + FREQ:60HZ + MOVOL:460V) + COOL:WATER **(17/12/2019 - ...)** ((((CAPPRM:AS1210 , CAPPRM:CE , CAPPRM:MHLW , CAPPRM:MOM) + MOVOL:400V , (CAPPRM:CE + MOVOL:500V , CAPPRM:MHLW + MOVOL:200V) + COOL:AIR) + FREQ:50HZ , (CAPPRM:ASME , CAPPRM:MHLW) + FREQ:60HZ + MOVOL:460V) + CAPPRE:IEC , ((MOVOL:230V , MOVOL:575V) + COOL:AIR , MOVOL:460V) + CAPPRE:ULCUL + CAPPRM:ASME + FREQ:60HZ)	
	Electrical legend:	Motor conduit			
	1649 8001 47	1	MOTOR CABLE	**(25/02/2019 - 16/12/2019)** (((CAPPRM:AS1210 , CAPPRM:CE , CAPPRM:MHLW , CAPPRM:MOM) + FREQ:50HZ + MOVOL:400V , (CAPPRM:ASME , CAPPRM:MHLW) + FREQ:60HZ + MOVOL:460V) + CAPPRE:IEC , CAPPRE:ULCUL + CAPPRM:ASME + FREQ:60HZ + MOVOL:460V) + COOL:WATER **(17/12/2019 - ...)** ((((CAPPRM:AS1210 , CAPPRM:CE , CAPPRM:MHLW , CAPPRM:MOM) + MOVOL:400V , (CAPPRM:CE + MOVOL:500V , CAPPRM:MHLW + MOVOL:200V) + COOL:AIR) + FREQ:50HZ , (CAPPRM:ASME , CAPPRM:MHLW) + FREQ:60HZ + MOVOL:460V) + CAPPRE:IEC , ((MOVOL:230V , MOVOL:575V) + COOL:AIR , MOVOL:460V) + CAPPRE:ULCUL + CAPPRM:ASME + FREQ:60HZ)	
	Electrical legend:	Motor conduit			
	1625 3906 31	1	DATA LABEL	**(25/02/2019 - 16/12/2019)** (((CAPPRM:AS1210 , CAPPRM:CE , CAPPRM:MHLW , CAPPRM:MOM) + FREQ:50HZ + MOVOL:400V , (CAPPRM:ASME , CAPPRM:MHLW) + FREQ:60HZ + MOVOL:460V) + CAPPRE:IEC , CAPPRE:ULCUL + CAPPRM:ASME + FREQ:60HZ + MOVOL:460V) + COOL:WATER **(17/12/2019 - ...)** ((((CAPPRM:AS1210 , CAPPRM:CE , CAPPRM:MHLW , CAPPRM:MOM) + MOVOL:400V , (CAPPRM:CE + MOVOL:500V , CAPPRM:MHLW + MOVOL:200V) + COOL:AIR) + FREQ:50HZ , (CAPPRM:ASME , CAPPRM:MHLW) + FREQ:60HZ + MOVOL:460V) + CAPPRE:IEC , ((MOVOL:230V , MOVOL:575V) + COOL:AIR , MOVOL:460V) + CAPPRE:ULCUL + CAPPRM:ASME + FREQ:60HZ)	Label
	1079 9901 68	1	WARNING LABEL	**(25/02/2019 - 16/12/2019)** (((CAPPRM:AS1210 , CAPPRM:CE , CAPPRM:MHLW , CAPPRM:MOM) + FREQ:50HZ + MOVOL:400V , (CAPPRM:ASME , CAPPRM:MHLW) + FREQ:60HZ + MOVOL:460V) + CAPPRE:IEC , CAPPRE:ULCUL + CAPPRM:ASME + FREQ:60HZ + MOVOL:460V) + COOL:WATER **(17/12/2019 - ...)** ((((CAPPRM:AS1210 , CAPPRM:CE , CAPPRM:MHLW , CAPPRM:MOM) + MOVOL:400V , (CAPPRM:CE + MOVOL:500V , CAPPRM:MHLW + MOVOL:200V) + COOL:AIR) + FREQ:50HZ , (CAPPRM:ASME , CAPPRM:MHLW) + FREQ:60HZ + MOVOL:460V) + CAPPRE:IEC , ((MOVOL:230V , MOVOL:575V) + COOL:AIR , MOVOL:460V) + CAPPRE:ULCUL + CAPPRM:ASME + FREQ:60HZ)	Label

Legend:

CAPPRE:IEC - Component approval electrical:IEC
CAPPRE:ULCUL - Component approval electrical:UL/cUL
CAPPRM:AS1210 - Component approval mechanical:AS1210
CAPPRM:ASME - Component approval mechanical:ASME
CAPPRM:CE - Component approval mechanical:CE
CAPPRM:MHLW - Component approval mechanical:MHLW
CAPPRM:MOM - Component approval mechanical:MOM
COOL:AIR - Cooling:Air cooled
COOL:WATER - Cooling:Water cooled
FREQ:50HZ - Frequency:50 Hz
FREQ:60HZ - Frequency:60 Hz
IDRY:Y - Integrated dryer:Yes
MODEL:GA90VP_16 - Model:GA 90VSD+
MOVOL:200V - Supply voltage:200 V
MOVOL:230V - Supply voltage:230 V
MOVOL:400V - Supply voltage:400 V
MOVOL:460V - Supply voltage:460 V
MOVOL:500V - Supply voltage:500 V
MOVOL:575V - Supply voltage:575 V

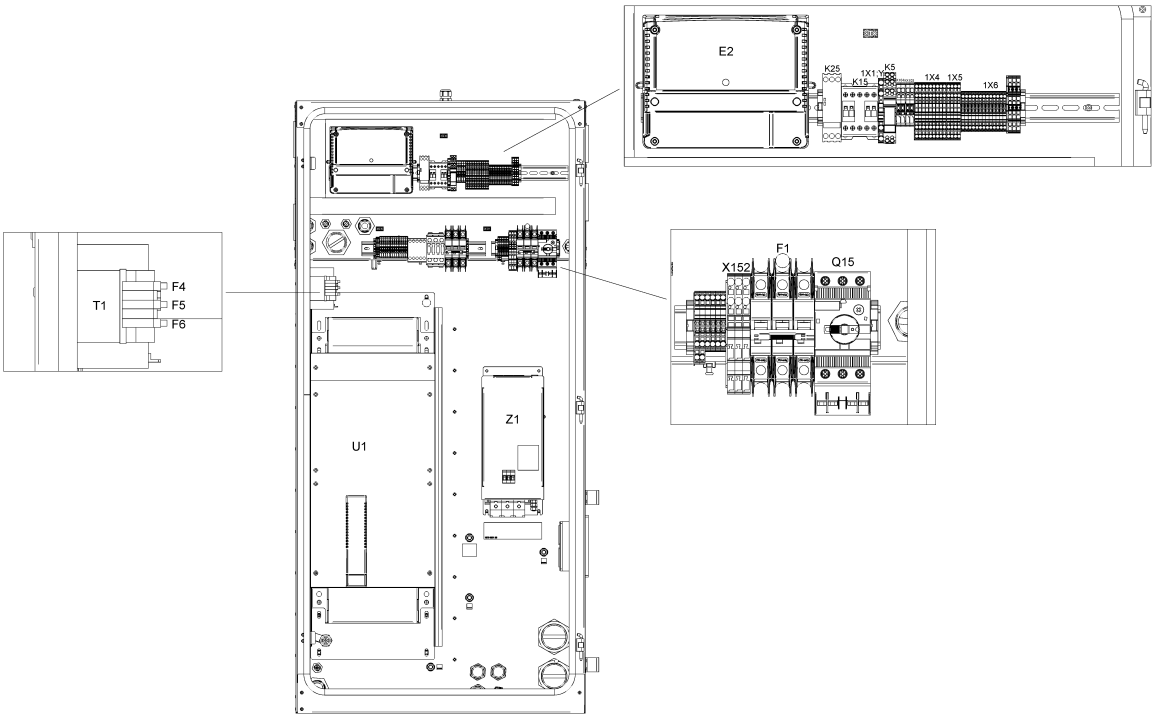
E2
K25
K15
1X1
K5
1X4
1X5
1X6
T1
F4
F5
F6
X152
F1
Q15
U1
Z1

Ref	Part Number	Qty	Name	Validity	EL
	1649 8005 00	0	LABEL	**(25/02/2019 - 16/12/2019)** (((CAPPRM:AS1210 , CAPPRM:CE , CAPPRM:MHLW , CAPPRM:MOM) + FREQ:50HZ + MOVOL:400V , (CAPPRM:ASME , CAPPRM:MHLW) + FREQ:60HZ + MOVOL:460V) + CAPPRE:IEC , CAPPRE:ULCUL + CAPPRM:ASME + FREQ:60HZ + MOVOL:460V) + COOL:WATER **(17/12/2019 - ...)** ((((CAPPRM:AS1210 , CAPPRM:CE , CAPPRM:MHLW , CAPPRM:MOM) + MOVOL:400V , (CAPPRM:CE + MOVOL:500V , CAPPRM:MHLW + MOVOL:200V) + COOL:AIR) + FREQ:50HZ , (CAPPRM:ASME , CAPPRM:MHLW) + FREQ:60HZ + MOVOL:460V) + CAPPRE:IEC , ((MOVOL:230V , MOVOL:575V) + COOL:AIR , MOVOL:460V) + CAPPRE:ULCUL + CAPPRM:ASME + FREQ:60HZ)	Label
	1900 5350 14	1	INVERTER	**(25/02/2019 - 16/12/2019)** (((CAPPRM:AS1210 , CAPPRM:CE , CAPPRM:MHLW , CAPPRM:MOM) + FREQ:50HZ + MOVOL:400V , (CAPPRM:ASME , CAPPRM:MHLW) + FREQ:60HZ + MOVOL:460V) + CAPPRE:IEC , CAPPRE:ULCUL + CAPPRM:ASME + FREQ:60HZ + MOVOL:460V) + COOL:WATER **(17/12/2019 - ...)** ((((CAPPRM:AS1210 , CAPPRM:CE , CAPPRM:MHLW , CAPPRM:MOM) + MOVOL:400V , (CAPPRM:CE + MOVOL:500V , CAPPRM:MHLW + MOVOL:200V) + COOL:AIR) + FREQ:50HZ , (CAPPRM:ASME , CAPPRM:MHLW) + FREQ:60HZ + MOVOL:460V) + CAPPRE:IEC , ((MOVOL:230V , MOVOL:575V) + COOL:AIR , MOVOL:460V) + CAPPRE:ULCUL + CAPPRM:ASME + FREQ:60HZ)	U1
	1631 2079 00	1	NANOPERMRING	**(25/02/2019 - 16/12/2019)** (((CAPPRM:AS1210 , CAPPRM:CE , CAPPRM:MHLW , CAPPRM:MOM) + FREQ:50HZ + MOVOL:400V , (CAPPRM:ASME , CAPPRM:MHLW) + FREQ:60HZ + MOVOL:460V) + CAPPRE:IEC , CAPPRE:ULCUL + CAPPRM:ASME + FREQ:60HZ + MOVOL:460V) + COOL:WATER **(17/12/2019 - ...)** ((((CAPPRM:AS1210 , CAPPRM:CE , CAPPRM:MHLW , CAPPRM:MOM) + MOVOL:400V , (CAPPRM:CE + MOVOL:500V , CAPPRM:MHLW + MOVOL:200V) + COOL:AIR) + FREQ:50HZ , (CAPPRM:ASME , CAPPRM:MHLW) + FREQ:60HZ + MOVOL:460V) + CAPPRE:IEC , ((MOVOL:230V , MOVOL:575V) + COOL:AIR , MOVOL:460V) + CAPPRE:ULCUL + CAPPRM:ASME + FREQ:60HZ)	
	Electrical legend:	Nanoperm ring			
	0697 9811 17	2	PLUG	**(25/02/2019 - 16/12/2019)** (((CAPPRM:AS1210 , CAPPRM:CE , CAPPRM:MHLW , CAPPRM:MOM) + FREQ:50HZ + MOVOL:400V , (CAPPRM:ASME , CAPPRM:MHLW) + FREQ:60HZ + MOVOL:460V) + CAPPRE:IEC , CAPPRE:ULCUL + CAPPRM:ASME + FREQ:60HZ + MOVOL:460V) + COOL:WATER **(17/12/2019 - ...)** ((((CAPPRM:AS1210 , CAPPRM:CE , CAPPRM:MHLW , CAPPRM:MOM) + MOVOL:400V , (CAPPRM:CE + MOVOL:500V , CAPPRM:MHLW + MOVOL:200V) + COOL:AIR) + FREQ:50HZ , (CAPPRM:ASME , CAPPRM:MHLW) + FREQ:60HZ + MOVOL:460V) + CAPPRE:IEC , ((MOVOL:230V , MOVOL:575V) + COOL:AIR , MOVOL:460V) + CAPPRE:ULCUL + CAPPRM:ASME + FREQ:60HZ)	
	Electrical legend:	Plug for transfo supply			

Legend:

CAPPRE:IEC - Component approval electrical:IEC
CAPPRM:ASME - Component approval mechanical:ASME
CAPPRM:MOM - Component approval mechanical:MOM
FREQ:50HZ - Frequency:50 Hz
MODEL:GA90VP_16 - Model:GA 90VSD+
MOVOL:400V - Supply voltage:400 V
MOVOL:575V - Supply voltage:575 V
CAPPRE:ULCUL - Component approval electrical:UL/cUL
CAPPRM:CE - Component approval mechanical:CE
COOL:AIR - Cooling:Air cooled
FREQ:60HZ - Frequency:60 Hz
MOVOL:200V - Supply voltage:200 V
MOVOL:460V - Supply voltage:460 V
CAPPRM:AS1210 - Component approval mechanical:AS1210
CAPPRM:MHLW - Component approval mechanical:MHLW
COOL:WATER - Cooling:Water cooled
IDRY:Y - Integrated dryer:Yes
MOVOL:230V - Supply voltage:230 V
MOVOL:500V - Supply voltage:500 V

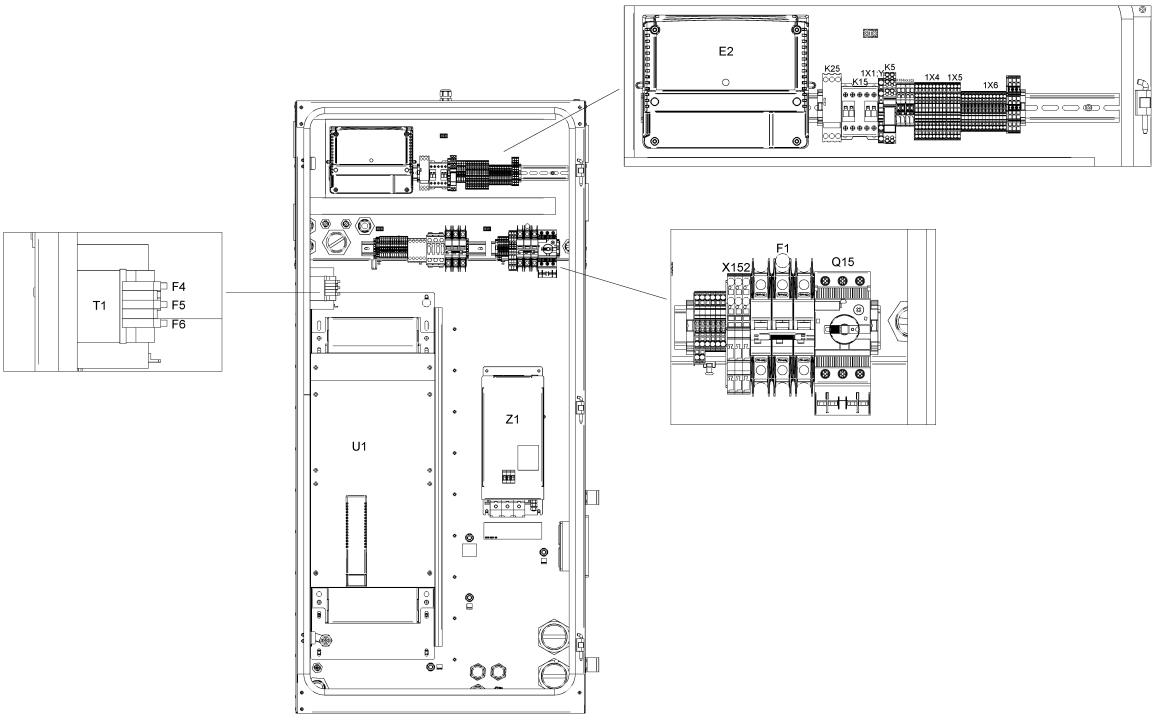
E2
K25
K15
1X1
K5
1X4
1X5
1X6
T1
F4
F5
F6
X152
F1
Q15
U1
Z1

Ref	Part Number	Qty	Name	Validity	EL
	0989 3700 48	2	NUT	**(25/02/2019 - 16/12/2019)** (((CAPPRM:AS1210 , CAPPRM:CE , CAPPRM:MHLW , CAPPRM:MOM) + FREQ:50HZ + MOVOL:400V , (CAPPRM:ASME , CAPPRM:MHLW) + FREQ:60HZ + MOVOL:460V) + CAPPRE:IEC , CAPPRE:ULCUL + CAPPRM:ASME + FREQ:60HZ + MOVOL:460V) + COOL:WATER **(17/12/2019 - ...)** ((((CAPPRM:AS1210 , CAPPRM:CE , CAPPRM:MHLW , CAPPRM:MOM) + MOVOL:400V , (CAPPRM:CE + MOVOL:500V , CAPPRM:MHLW + MOVOL:200V) + COOL:AIR) + FREQ:50HZ , (CAPPRM:ASME , CAPPRM:MHLW) + FREQ:60HZ + MOVOL:460V) + CAPPRE:IEC , ((MOVOL:230V , MOVOL:575V) + COOL:AIR , MOVOL:460V) + CAPPRE:ULCUL + CAPPRM:ASME + FREQ:60HZ)	
	Electrical legend:	Nut for transfo supply			
	0698 5140 72	1	CABLE GLAND	**(25/02/2019 - 16/12/2019)** (((CAPPRM:AS1210 , CAPPRM:CE , CAPPRM:MHLW , CAPPRM:MOM) + FREQ:50HZ + MOVOL:400V , (CAPPRM:ASME , CAPPRM:MHLW) + FREQ:60HZ + MOVOL:460V) + CAPPRE:IEC , CAPPRE:ULCUL + CAPPRM:ASME + FREQ:60HZ + MOVOL:460V) + COOL:WATER **(17/12/2019 - ...)** ((((CAPPRM:AS1210 , CAPPRM:CE , CAPPRM:MHLW , CAPPRM:MOM) + MOVOL:400V , (CAPPRM:CE + MOVOL:500V , CAPPRM:MHLW + MOVOL:200V) + COOL:AIR) + FREQ:50HZ , (CAPPRM:ASME , CAPPRM:MHLW) + FREQ:60HZ + MOVOL:460V) + CAPPRE:IEC , ((MOVOL:230V , MOVOL:575V) + COOL:AIR , MOVOL:460V) + CAPPRE:ULCUL + CAPPRM:ASME + FREQ:60HZ)	Fan
	0698 5140 71	1	CABLE GLAND	**(25/02/2019 - 16/12/2019)** (((CAPPRM:AS1210 , CAPPRM:CE , CAPPRM:MHLW , CAPPRM:MOM) + FREQ:50HZ + MOVOL:400V , (CAPPRM:ASME , CAPPRM:MHLW) + FREQ:60HZ + MOVOL:460V) + CAPPRE:IEC , CAPPRE:ULCUL + CAPPRM:ASME + FREQ:60HZ + MOVOL:460V) + COOL:WATER **(17/12/2019 - ...)** ((((CAPPRM:AS1210 , CAPPRM:CE , CAPPRM:MHLW , CAPPRM:MOM) + MOVOL:400V , (CAPPRM:CE + MOVOL:500V , CAPPRM:MHLW + MOVOL:200V) + COOL:AIR) + FREQ:50HZ , (CAPPRM:ASME , CAPPRM:MHLW) + FREQ:60HZ + MOVOL:460V) + CAPPRE:IEC , ((MOVOL:230V , MOVOL:575V) + COOL:AIR , MOVOL:460V) + CAPPRE:ULCUL + CAPPRM:ASME + FREQ:60HZ)	
	Electrical legend:	Ambient sensor			
	0697 9809 20	1	LOCKNUT	**(25/02/2019 - 16/12/2019)** (((CAPPRM:AS1210 , CAPPRM:CE , CAPPRM:MHLW , CAPPRM:MOM) + FREQ:50HZ + MOVOL:400V , (CAPPRM:ASME , CAPPRM:MHLW) + FREQ:60HZ + MOVOL:460V) + CAPPRE:IEC , CAPPRE:ULCUL + CAPPRM:ASME + FREQ:60HZ + MOVOL:460V) + COOL:WATER **(17/12/2019 - ...)** ((((CAPPRM:AS1210 , CAPPRM:CE , CAPPRM:MHLW , CAPPRM:MOM) + MOVOL:400V , (CAPPRM:CE + MOVOL:500V , CAPPRM:MHLW + MOVOL:200V) + COOL:AIR) + FREQ:50HZ , (CAPPRM:ASME , CAPPRM:MHLW) + FREQ:60HZ + MOVOL:460V) + CAPPRE:IEC , ((MOVOL:230V , MOVOL:575V) + COOL:AIR , MOVOL:460V) + CAPPRE:ULCUL + CAPPRM:ASME + FREQ:60HZ)	
	Electrical legend:	Ambient sensor			

Legend:

CAPPRE:IEC - Component approval electrical:IEC
CAPPRM:ASME - Component approval mechanical:ASME
CAPPRM:MOM - Component approval mechanical:MOM
FREQ:50HZ - Frequency:50 Hz
MODEL:GA90VP_16 - Model:GA 90VSD+
MOVOL:400V - Supply voltage:400 V
MOVOL:575V - Supply voltage:575 V
CAPPRE:ULCUL - Component approval electrical:UL/cUL
CAPPRM:CE - Component approval mechanical:CE
COOL:AIR - Cooling:Air cooled
FREQ:60HZ - Frequency:60 Hz
MOVOL:200V - Supply voltage:200 V
MOVOL:460V - Supply voltage:460 V
CAPPRM:AS1210 - Component approval mechanical:AS1210
CAPPRM:MHLW - Component approval mechanical:MHLW
COOL:WATER - Cooling:Water cooled
IDRY:Y - Integrated dryer:Yes
MOVOL:230V - Supply voltage:230 V
MOVOL:500V - Supply voltage:500 V

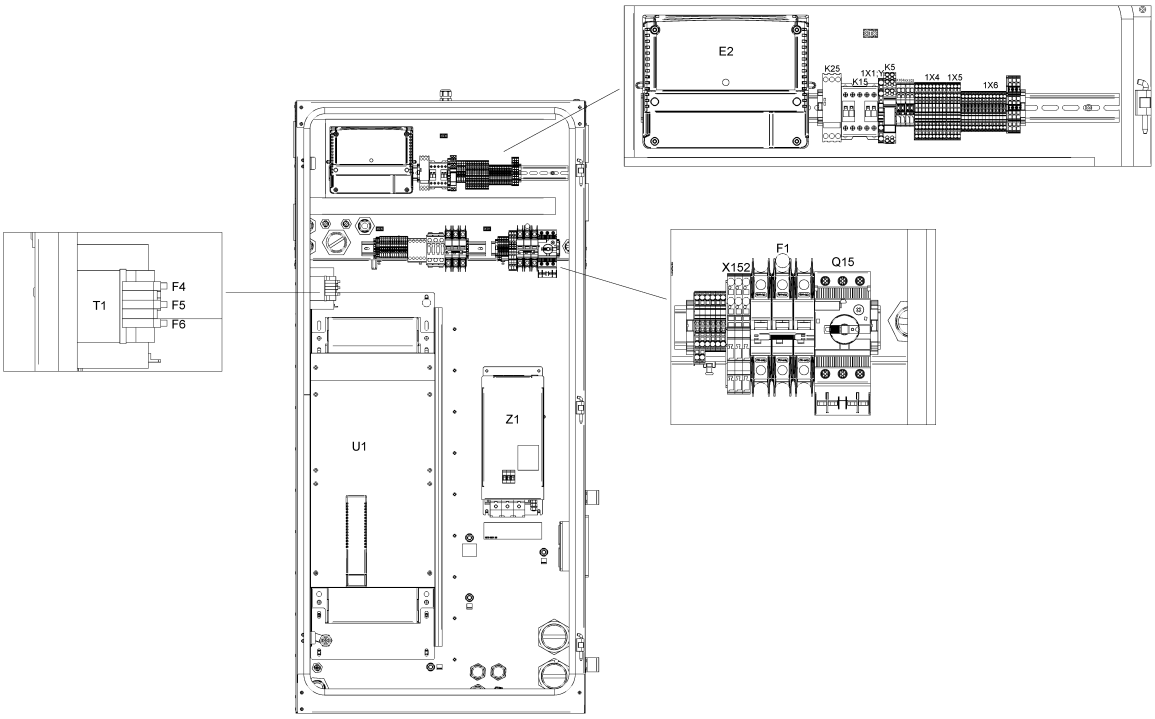
E2
K25
K15
1X1
K5
1X4
1X5
1X6
T1
F4
F5
F6
X152
F1
Q15
U1
Z1

21.19 - Cubicle components GA 90 VSD+ - (200V-400V-500V/50Hz, 460V/60Hz - IEC, 230V-460V-575V/60Hz - UL-cUL) - Full-Feature (17/12/2019 - ...)

(((MOVOL:200V , MOVOL:400V , MOVOL:500V) + FREQ:50HZ , FREQ:60HZ + MOVOL:460V) + CAPPRE:IEC , (MOVOL:230V , MOVOL:460V , MOVOL:575V) + CAPPRE:ULCUL + FREQ:60HZ) + IDRY:Y + MODEL:GA90VP_16

Ref	Part Number	Qty	Name	Validity	EL
	1089 9556 44	1	FAN WITH FILTER	**(25/02/2019 - 16/12/2019)** (((CAPPRM:AS1210 , CAPPRM:CE , CAPPRM:MHLW , CAPPRM:MOM) + FREQ:50HZ + MOVOL:400V , (CAPPRM:ASME , CAPPRM:MHLW) + FREQ:60HZ + MOVOL:460V) + CAPPRE:IEC , CAPPRE:ULCUL + CAPPRM:ASME + FREQ:60HZ + MOVOL:460V) + COOL:WATER **(17/12/2019 - ...)** ((((CAPPRM:AS1210 , CAPPRM:CE , CAPPRM:MHLW , CAPPRM:MOM) + MOVOL:400V , (CAPPRM:CE + MOVOL:500V , CAPPRM:MHLW + MOVOL:200V) + COOL:AIR) + FREQ:50HZ , (CAPPRM:ASME , CAPPRM:MHLW) + FREQ:60HZ + MOVOL:460V) + CAPPRE:IEC , ((MOVOL:230V , MOVOL:575V) + COOL:AIR , MOVOL:460V) + CAPPRE:ULCUL + CAPPRM:ASME + FREQ:60HZ)	Cubicle fan
	1089 9556 72	4	AIR INLET WITHOUT FILTER	**(25/02/2019 - 16/12/2019)** (((CAPPRM:AS1210 , CAPPRM:CE , CAPPRM:MHLW , CAPPRM:MOM) + FREQ:50HZ + MOVOL:400V , (CAPPRM:ASME , CAPPRM:MHLW) + FREQ:60HZ + MOVOL:460V) + CAPPRE:IEC , CAPPRE:ULCUL + CAPPRM:ASME + FREQ:60HZ + MOVOL:460V) + COOL:WATER **(17/12/2019 - ...)** ((((CAPPRM:AS1210 , CAPPRM:CE , CAPPRM:MHLW , CAPPRM:MOM) + MOVOL:400V , (CAPPRM:CE + MOVOL:500V , CAPPRM:MHLW + MOVOL:200V) + COOL:AIR) + FREQ:50HZ , (CAPPRM:ASME , CAPPRM:MHLW) + FREQ:60HZ + MOVOL:460V) + CAPPRE:IEC , ((MOVOL:230V , MOVOL:575V) + COOL:AIR , MOVOL:460V) + CAPPRE:ULCUL + CAPPRM:ASME + FREQ:60HZ)	Filter grid
	1088 0032 09	1	CONNECTOR	**(25/02/2019 - 16/12/2019)** (((CAPPRM:AS1210 , CAPPRM:CE , CAPPRM:MHLW , CAPPRM:MOM) + FREQ:50HZ + MOVOL:400V , (CAPPRM:ASME , CAPPRM:MHLW) + FREQ:60HZ + MOVOL:460V) + CAPPRE:IEC , CAPPRE:ULCUL + CAPPRM:ASME + FREQ:60HZ + MOVOL:460V) + COOL:WATER **(17/12/2019 - ...)** ((((CAPPRM:AS1210 , CAPPRM:CE , CAPPRM:MHLW , CAPPRM:MOM) + MOVOL:400V , (CAPPRM:CE + MOVOL:500V , CAPPRM:MHLW + MOVOL:200V) + COOL:AIR) + FREQ:50HZ , (CAPPRM:ASME , CAPPRM:MHLW) + FREQ:60HZ + MOVOL:460V) + CAPPRE:IEC , ((MOVOL:230V , MOVOL:575V) + COOL:AIR , MOVOL:460V) + CAPPRE:ULCUL + CAPPRM:ASME + FREQ:60HZ)	X3
	1089 9572 06	1	LINE FILTER	**(25/02/2019 - 16/12/2019)** (((CAPPRM:AS1210 , CAPPRM:CE , CAPPRM:MHLW , CAPPRM:MOM) + FREQ:50HZ + MOVOL:400V , (CAPPRM:ASME , CAPPRM:MHLW) + FREQ:60HZ + MOVOL:460V) + CAPPRE:IEC , CAPPRE:ULCUL + CAPPRM:ASME + FREQ:60HZ + MOVOL:460V) + COOL:WATER **(17/12/2019 - ...)** ((((CAPPRM:AS1210 , CAPPRM:CE , CAPPRM:MHLW , CAPPRM:MOM) + MOVOL:400V , (CAPPRM:CE + MOVOL:500V , CAPPRM:MHLW + MOVOL:200V) + COOL:AIR) + FREQ:50HZ , (CAPPRM:ASME , CAPPRM:MHLW) + FREQ:60HZ + MOVOL:460V) + CAPPRE:IEC , ((MOVOL:230V , MOVOL:575V) + COOL:AIR , MOVOL:460V) + CAPPRE:ULCUL + CAPPRM:ASME + FREQ:60HZ)	Z1 for 90kw

Legend:

CAPPRE:IEC - Component approval electrical:IEC
CAPPRM:ASME - Component approval mechanical:ASME
CAPPRM:MOM - Component approval mechanical:MOM
FREQ:50HZ - Frequency:50 Hz
MODEL:GA90VP_16 - Model:GA 90VSD+
MOVOL:400V - Supply voltage:400 V
MOVOL:575V - Supply voltage:575 V
CAPPRE:ULCUL - Component approval electrical:UL/cUL
CAPPRM:CE - Component approval mechanical:CE
COOL:AIR - Cooling:Air cooled
FREQ:60HZ - Frequency:60 Hz
MOVOL:200V - Supply voltage:200 V
MOVOL:460V - Supply voltage:460 V
CAPPRM:AS1210 - Component approval mechanical:AS1210
CAPPRM:MHLW - Component approval mechanical:MHLW
COOL:WATER - Cooling:Water cooled
IDRY:Y - Integrated dryer:Yes
MOVOL:230V - Supply voltage:230 V
MOVOL:500V - Supply voltage:500 V

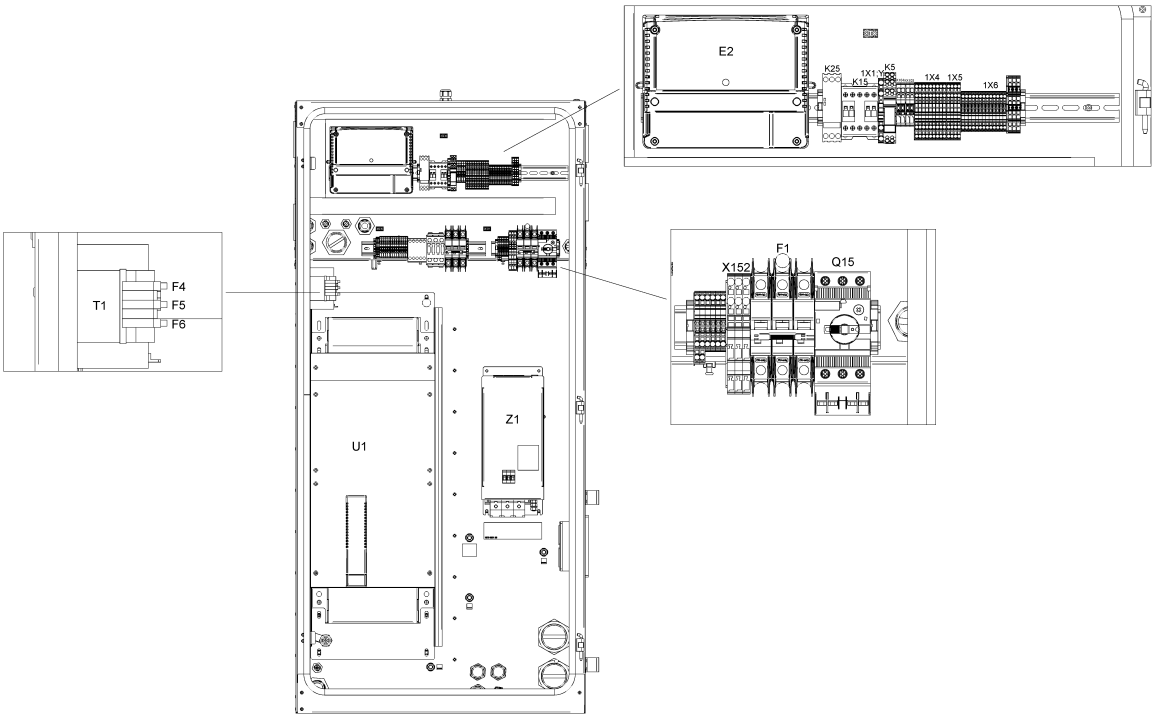
E2
K25
K15
1X1
K5
1X4
1X5
1X6
T1
F4
F5
F6
X152
F1
Q15
U1
Z1

21.19 - Cubicle components GA 90 VSD+ - (200V-400V-500V/50Hz, 460V/60Hz - IEC, 230V-460V-575V/60Hz - UL-cUL) - Full-Feature (17/12/2019 - ...)

(((MOVOL:200V , MOVOL:400V , MOVOL:500V) + FREQ:50HZ , FREQ:60HZ + MOVOL:460V) + CAPPRE:IEC , (MOVOL:230V , MOVOL:460V , MOVOL:575V) + CAPPRE:ULCUL + FREQ:60HZ) + IDRY:Y + MODEL:GA90VP_16

Ref	Part Number	Qty	Name	Validity	EL
	1089 9562 04	1	STRAP	**(25/02/2019 - 16/12/2019)** (((CAPPRM:AS1210 , CAPPRM:CE , CAPPRM:MHLW , CAPPRM:MOM) + FREQ:50HZ + MOVOL:400V , (CAPPRM:ASME , CAPPRM:MHLW) + FREQ:60HZ + MOVOL:460V) + CAPPRE:IEC , CAPPRE:ULCUL + CAPPRM:ASME + FREQ:60HZ + MOVOL:460V) + COOL:WATER **(17/12/2019 - ...)** ((((CAPPRM:AS1210 , CAPPRM:CE , CAPPRM:MHLW , CAPPRM:MOM) + MOVOL:400V , (CAPPRM:CE + MOVOL:500V , CAPPRM:MHLW + MOVOL:200V) + COOL:AIR) + FREQ:50HZ , (CAPPRM:ASME , CAPPRM:MHLW) + FREQ:60HZ + MOVOL:460V) + CAPPRE:IEC , ((MOVOL:230V , MOVOL:575V) + COOL:AIR , MOVOL:460V) + CAPPRE:ULCUL + CAPPRM:ASME + FREQ:60HZ)	HF-screen
	1089 9514 56	1	TRANSFORMER	**(25/02/2019 - 16/12/2019)** (((CAPPRM:AS1210 , CAPPRM:CE , CAPPRM:MHLW , CAPPRM:MOM) + FREQ:50HZ + MOVOL:400V , (CAPPRM:ASME , CAPPRM:MHLW) + FREQ:60HZ + MOVOL:460V) + CAPPRE:IEC , CAPPRE:ULCUL + CAPPRM:ASME + FREQ:60HZ + MOVOL:460V) + COOL:WATER **(17/12/2019 - ...)** ((((CAPPRM:AS1210 , CAPPRM:CE , CAPPRM:MHLW , CAPPRM:MOM) + MOVOL:400V , (CAPPRM:CE + MOVOL:500V , CAPPRM:MHLW + MOVOL:200V) + COOL:AIR) + FREQ:50HZ , (CAPPRM:ASME , CAPPRM:MHLW) + FREQ:60HZ + MOVOL:460V) + CAPPRE:IEC , ((MOVOL:230V , MOVOL:575V) + COOL:AIR , MOVOL:460V) + CAPPRE:ULCUL + CAPPRM:ASME + FREQ:60HZ)	T1
	1089 9522 26	1	CIRCUIT BREAKER	**(25/02/2019 - 16/12/2019)** (((CAPPRM:AS1210 , CAPPRM:CE , CAPPRM:MHLW , CAPPRM:MOM) + FREQ:50HZ + MOVOL:400V , (CAPPRM:ASME , CAPPRM:MHLW) + FREQ:60HZ + MOVOL:460V) + CAPPRE:IEC , CAPPRE:ULCUL + CAPPRM:ASME + FREQ:60HZ + MOVOL:460V) + COOL:WATER **(17/12/2019 - ...)** ((((CAPPRM:AS1210 , CAPPRM:CE , CAPPRM:MHLW , CAPPRM:MOM) + MOVOL:400V , (CAPPRM:CE + MOVOL:500V , CAPPRM:MHLW + MOVOL:200V) + COOL:AIR) + FREQ:50HZ , (CAPPRM:ASME , CAPPRM:MHLW) + FREQ:60HZ + MOVOL:460V) + CAPPRE:IEC , ((MOVOL:230V , MOVOL:575V) + COOL:AIR , MOVOL:460V) + CAPPRE:ULCUL + CAPPRM:ASME + FREQ:60HZ)	F1
	1089 9513 41	1	PUSH BUTTON	**(25/02/2019 - 16/12/2019)** (((CAPPRM:AS1210 , CAPPRM:CE , CAPPRM:MHLW , CAPPRM:MOM) + FREQ:50HZ + MOVOL:400V , (CAPPRM:ASME , CAPPRM:MHLW) + FREQ:60HZ + MOVOL:460V) + CAPPRE:IEC , CAPPRE:ULCUL + CAPPRM:ASME + FREQ:60HZ + MOVOL:460V) + COOL:WATER **(17/12/2019 - ...)** ((((CAPPRM:AS1210 , CAPPRM:CE , CAPPRM:MHLW , CAPPRM:MOM) + MOVOL:400V , (CAPPRM:CE + MOVOL:500V , CAPPRM:MHLW + MOVOL:200V) + COOL:AIR) + FREQ:50HZ , (CAPPRM:ASME , CAPPRM:MHLW) + FREQ:60HZ + MOVOL:460V) + CAPPRE:IEC , ((MOVOL:230V , MOVOL:575V) + COOL:AIR , MOVOL:460V) + CAPPRE:ULCUL + CAPPRM:ASME + FREQ:60HZ)	S3

Legend:

CAPPRE:IEC - Component approval electrical:IEC
CAPPRE:ULCUL - Component approval electrical:UL/cUL
CAPPRM:AS1210 - Component approval mechanical:AS1210
CAPPRM:ASME - Component approval mechanical:ASME
CAPPRM:CE - Component approval mechanical:CE
CAPPRM:MHLW - Component approval mechanical:MHLW
CAPPRM:MOM - Component approval mechanical:MOM
COOL:AIR - Cooling:Air cooled
COOL:WATER - Cooling:Water cooled
FREQ:50HZ - Frequency:50 Hz
FREQ:60HZ - Frequency:60 Hz
IDRY:Y - Integrated dryer:Yes
MODEL:GA90VP_16 - Model:GA 90VSD+
MOVOL:200V - Supply voltage:200 V
MOVOL:230V - Supply voltage:230 V
MOVOL:400V - Supply voltage:400 V
MOVOL:460V - Supply voltage:460 V
MOVOL:500V - Supply voltage:500 V
MOVOL:575V - Supply voltage:575 V

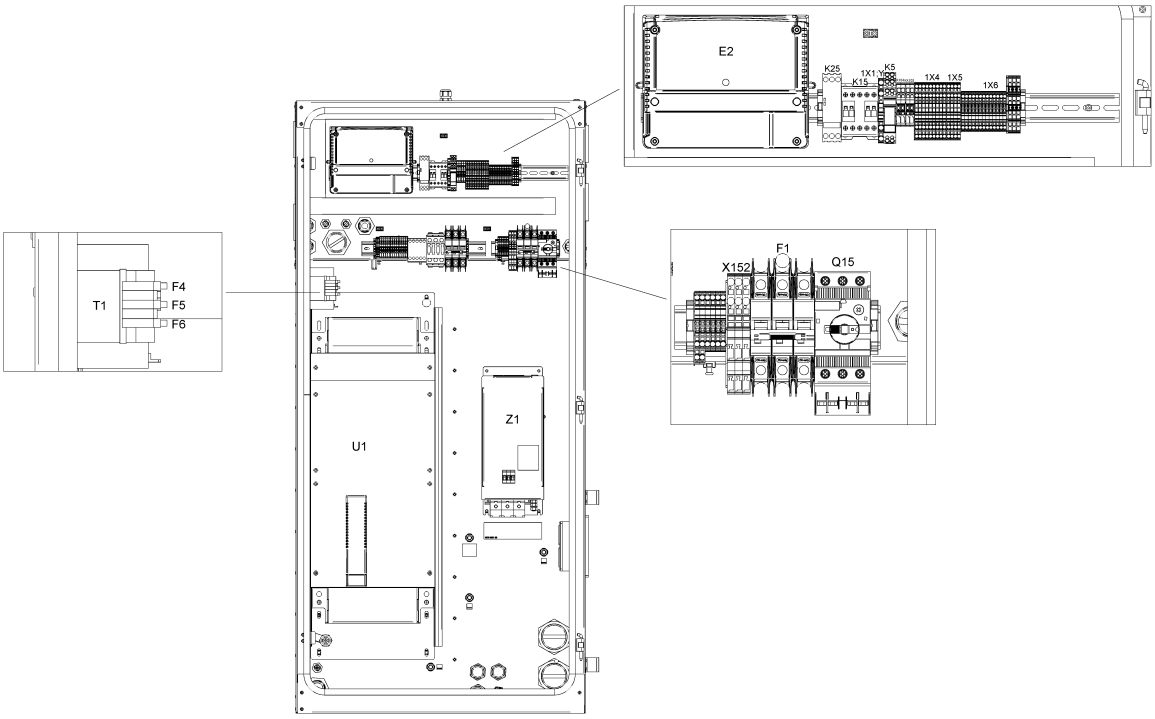
E2
K25
K15
1X1
K5
1X4
1X5
1X6
T1
F4
F5
F6
X152
F1
Q15
U1
Z1

21.19 - Cubicle components GA 90 VSD+ - (200V-400V-500V/50Hz, 460V/60Hz - IEC, 230V-460V-575V/60Hz - UL-cUL) - Full-Feature (17/12/2019 - ...)

(((MOVOL:200V , MOVOL:400V , MOVOL:500V) + FREQ:50HZ , FREQ:60HZ + MOVOL:460V) + CAPPRE:IEC , (MOVOL:230V , MOVOL:460V , MOVOL:575V) + CAPPRE:ULCUL + FREQ:60HZ) + IDRY:Y + MODEL:GA90VP_16

Ref	Part Number	Qty	Name	Validity	EL
	1089 9513 28	1	HOLDER	**(25/02/2019 - 16/12/2019)** (((CAPPRM:AS1210 , CAPPRM:CE , CAPPRM:MHLW , CAPPRM:MOM) + FREQ:50HZ + MOVOL:400V , (CAPPRM:ASME , CAPPRM:MHLW) + FREQ:60HZ + MOVOL:460V) + CAPPRE:IEC , CAPPRE:ULCUL + CAPPRM:ASME + FREQ:60HZ + MOVOL:460V) + COOL:WATER **(17/12/2019 - ...)** ((((CAPPRM:AS1210 , CAPPRM:CE , CAPPRM:MHLW , CAPPRM:MOM) + MOVOL:400V , (CAPPRM:CE + MOVOL:500V , CAPPRM:MHLW + MOVOL:200V) + COOL:AIR) + FREQ:50HZ , (CAPPRM:ASME , CAPPRM:MHLW) + FREQ:60HZ + MOVOL:460V) + CAPPRE:IEC , ((MOVOL:230V , MOVOL:575V) + COOL:AIR , MOVOL:460V) + CAPPRE:ULCUL + CAPPRM:ASME + FREQ:60HZ)	S3
	~~1089 9513 30~~	4	CONTACTOR	**(25/02/2019 - 16/12/2019)** (((CAPPRM:AS1210 , CAPPRM:CE , CAPPRM:MHLW , CAPPRM:MOM) + FREQ:50HZ + MOVOL:400V , (CAPPRM:ASME , CAPPRM:MHLW) + FREQ:60HZ + MOVOL:460V) + CAPPRE:IEC , CAPPRE:ULCUL + CAPPRM:ASME + FREQ:60HZ + MOVOL:460V) + COOL:WATER **(17/12/2019 - ...)** ((((CAPPRM:AS1210 , CAPPRM:CE , CAPPRM:MHLW , CAPPRM:MOM) + MOVOL:400V , (CAPPRM:CE + MOVOL:500V , CAPPRM:MHLW + MOVOL:200V) + COOL:AIR) + FREQ:50HZ , (CAPPRM:ASME , CAPPRM:MHLW) + FREQ:60HZ + MOVOL:460V) + CAPPRE:IEC , ((MOVOL:230V , MOVOL:575V) + COOL:AIR , MOVOL:460V) + CAPPRE:ULCUL + CAPPRM:ASME + FREQ:60HZ)	S3
	Substituted by:	1089 9513 04 - CONTACT BLOCK (quantity: 1)			
	1088 0039 07	3	TERMINAL	**(25/02/2019 - 16/12/2019)** (((CAPPRM:AS1210 , CAPPRM:CE , CAPPRM:MHLW , CAPPRM:MOM) + FREQ:50HZ + MOVOL:400V , (CAPPRM:ASME , CAPPRM:MHLW) + FREQ:60HZ + MOVOL:460V) + CAPPRE:IEC , CAPPRE:ULCUL + CAPPRM:ASME + FREQ:60HZ + MOVOL:460V) + COOL:WATER **(17/12/2019 - ...)** ((((CAPPRM:AS1210 , CAPPRM:CE , CAPPRM:MHLW , CAPPRM:MOM) + MOVOL:400V , (CAPPRM:CE + MOVOL:500V , CAPPRM:MHLW + MOVOL:200V) + COOL:AIR) + FREQ:50HZ , (CAPPRM:ASME , CAPPRM:MHLW) + FREQ:60HZ + MOVOL:460V) + CAPPRE:IEC , ((MOVOL:230V , MOVOL:575V) + COOL:AIR , MOVOL:460V) + CAPPRE:ULCUL + CAPPRM:ASME + FREQ:60HZ)	X152
	1088 0039 05	1	PLATE	**(25/02/2019 - 16/12/2019)** (((CAPPRM:AS1210 , CAPPRM:CE , CAPPRM:MHLW , CAPPRM:MOM) + FREQ:50HZ + MOVOL:400V , (CAPPRM:ASME , CAPPRM:MHLW) + FREQ:60HZ + MOVOL:460V) + CAPPRE:IEC , CAPPRE:ULCUL + CAPPRM:ASME + FREQ:60HZ + MOVOL:460V) + COOL:WATER **(17/12/2019 - ...)** ((((CAPPRM:AS1210 , CAPPRM:CE , CAPPRM:MHLW , CAPPRM:MOM) + MOVOL:400V , (CAPPRM:CE + MOVOL:500V , CAPPRM:MHLW + MOVOL:200V) + COOL:AIR) + FREQ:50HZ , (CAPPRM:ASME , CAPPRM:MHLW) + FREQ:60HZ + MOVOL:460V) + CAPPRE:IEC , ((MOVOL:230V , MOVOL:575V) + COOL:AIR , MOVOL:460V) + CAPPRE:ULCUL + CAPPRM:ASME + FREQ:60HZ)	X152

Legend:

CAPPRE:IEC - Component approval electrical:IEC
CAPPRE:ULCUL - Component approval electrical:UL/cUL
CAPPRM:AS1210 - Component approval mechanical:AS1210
CAPPRM:ASME - Component approval mechanical:ASME
CAPPRM:CE - Component approval mechanical:CE
CAPPRM:MHLW - Component approval mechanical:MHLW
CAPPRM:MOM - Component approval mechanical:MOM
COOL:AIR - Cooling:Air cooled
COOL:WATER - Cooling:Water cooled
FREQ:50HZ - Frequency:50 Hz
FREQ:60HZ - Frequency:60 Hz
IDRY:Y - Integrated dryer:Yes
MODEL:GA90VP_16 - Model:GA 90VSD+
MOVOL:200V - Supply voltage:200 V
MOVOL:230V - Supply voltage:230 V
MOVOL:400V - Supply voltage:400 V
MOVOL:460V - Supply voltage:460 V
MOVOL:500V - Supply voltage:500 V
MOVOL:575V - Supply voltage:575 V

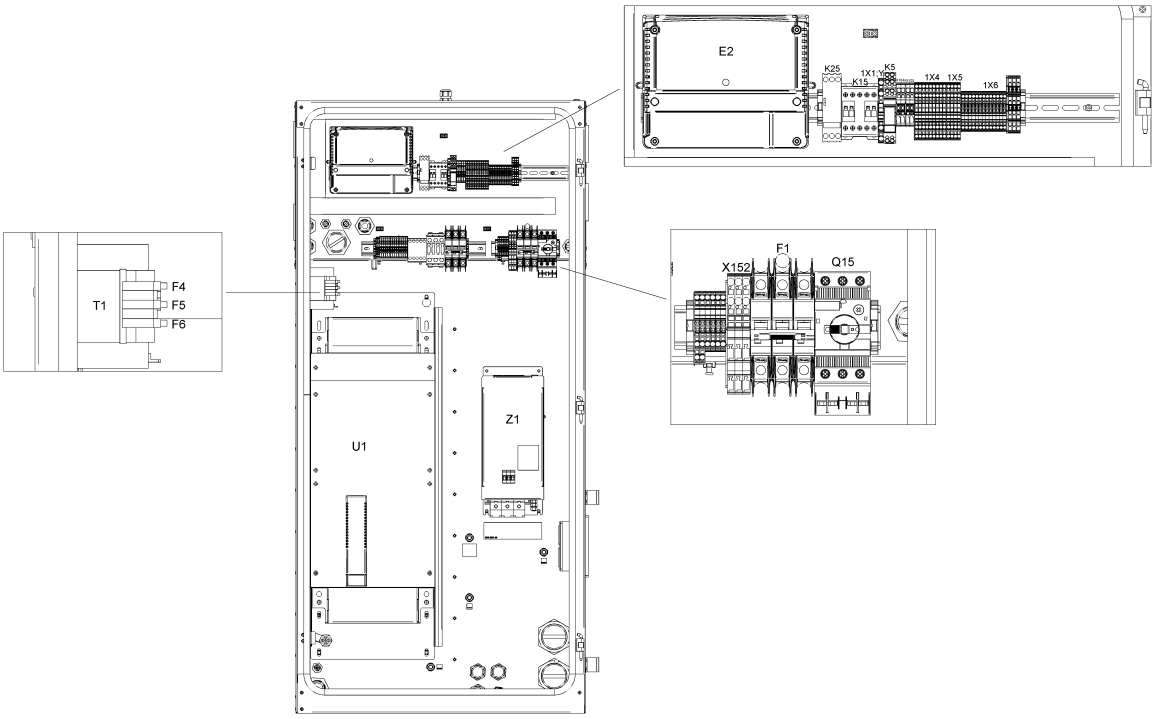
E2
K25
K15
1X1
K5
1X4
1X5
1X6
T1
F4
F5
F6
X152
F1
Q15
U1
Z1

21.19 - Cubicle components GA 90 VSD+ - (200V-400V-500V/50Hz, 460V/60Hz - IEC, 230V-460V-575V/60Hz - UL-cUL) - Full-Feature (17/12/2019 - ...)

(((MOVOL:200V , MOVOL:400V , MOVOL:500V) + FREQ:50HZ , FREQ:60HZ + MOVOL:460V) + CAPPRE:IEC , (MOVOL:230V , MOVOL:460V , MOVOL:575V) + CAPPRE:ULCUL + FREQ:60HZ) + IDRY:Y + MODEL:GA90VP_16

Ref	Part Number	Qty	Name	Validity	EL
	1088 0039 26	1	CONNECTOR	**(25/02/2019 - 16/12/2019)** (((CAPPRM:AS1210 , CAPPRM:CE , CAPPRM:MHLW , CAPPRM:MOM) + FREQ:50HZ + MOVOL:400V , (CAPPRM:ASME , CAPPRM:MHLW) + FREQ:60HZ + MOVOL:460V) + CAPPRE:IEC , CAPPRE:ULCUL + CAPPRM:ASME + FREQ:60HZ + MOVOL:460V) + COOL:WATER **(17/12/2019 - ...)** ((((CAPPRM:AS1210 , CAPPRM:CE , CAPPRM:MHLW , CAPPRM:MOM) + MOVOL:400V , (CAPPRM:CE + MOVOL:500V , CAPPRM:MHLW + MOVOL:200V) + COOL:AIR) + FREQ:50HZ , (CAPPRM:ASME , CAPPRM:MHLW) + FREQ:60HZ + MOVOL:460V) + CAPPRE:IEC , ((MOVOL:230V , MOVOL:575V) + COOL:AIR , MOVOL:460V) + CAPPRE:ULCUL + CAPPRM:ASME + FREQ:60HZ)	
	Electrical legend:	X152 (remove coding pin 1,3)			
	1088 0037 99	4	PIN	**(25/02/2019 - 16/12/2019)** (((CAPPRM:AS1210 , CAPPRM:CE , CAPPRM:MHLW , CAPPRM:MOM) + FREQ:50HZ + MOVOL:400V , (CAPPRM:ASME , CAPPRM:MHLW) + FREQ:60HZ + MOVOL:460V) + CAPPRE:IEC , CAPPRE:ULCUL + CAPPRM:ASME + FREQ:60HZ + MOVOL:460V) + COOL:WATER **(17/12/2019 - ...)** ((((CAPPRM:AS1210 , CAPPRM:CE , CAPPRM:MHLW , CAPPRM:MOM) + MOVOL:400V , (CAPPRM:CE + MOVOL:500V , CAPPRM:MHLW + MOVOL:200V) + COOL:AIR) + FREQ:50HZ , (CAPPRM:ASME , CAPPRM:MHLW) + FREQ:60HZ + MOVOL:460V) + CAPPRE:IEC , ((MOVOL:230V , MOVOL:575V) + COOL:AIR , MOVOL:460V) + CAPPRE:ULCUL + CAPPRM:ASME + FREQ:60HZ)	X152:1; 3
	~~1088 0031 81~~	7	END STOP BRACKET 6MM	**(25/02/2019 - 16/12/2019)** (((CAPPRM:AS1210 , CAPPRM:CE , CAPPRM:MHLW , CAPPRM:MOM) + FREQ:50HZ + MOVOL:400V , (CAPPRM:ASME , CAPPRM:MHLW) + FREQ:60HZ + MOVOL:460V) + CAPPRE:IEC , CAPPRE:ULCUL + CAPPRM:ASME + FREQ:60HZ + MOVOL:460V) + COOL:WATER **(17/12/2019 - ...)** ((((CAPPRM:AS1210 , CAPPRM:CE , CAPPRM:MHLW , CAPPRM:MOM) + MOVOL:400V , (CAPPRM:CE + MOVOL:500V , CAPPRM:MHLW + MOVOL:200V) + COOL:AIR) + FREQ:50HZ , (CAPPRM:ASME , CAPPRM:MHLW) + FREQ:60HZ + MOVOL:460V) + CAPPRE:IEC , ((MOVOL:230V , MOVOL:575V) + COOL:AIR , MOVOL:460V) + CAPPRE:ULCUL + CAPPRM:ASME + FREQ:60HZ)	
	Electrical legend: **Substituted by:**	Connector/terminal rail 1089 0577 82 - END RETAINER (quantity: 1)			
	1088 0039 38	2	TERMINAL	**(25/02/2019 - 16/12/2019)** (((CAPPRM:AS1210 , CAPPRM:CE , CAPPRM:MHLW , CAPPRM:MOM) + FREQ:50HZ + MOVOL:400V , (CAPPRM:ASME , CAPPRM:MHLW) + FREQ:60HZ + MOVOL:460V) + CAPPRE:IEC , CAPPRE:ULCUL + CAPPRM:ASME + FREQ:60HZ + MOVOL:460V) + COOL:WATER **(17/12/2019 - ...)** ((((CAPPRM:AS1210 , CAPPRM:CE , CAPPRM:MHLW , CAPPRM:MOM) + MOVOL:400V , (CAPPRM:CE + MOVOL:500V , CAPPRM:MHLW + MOVOL:200V) + COOL:AIR) + FREQ:50HZ , (CAPPRM:ASME , CAPPRM:MHLW) + FREQ:60HZ + MOVOL:460V) + CAPPRE:IEC , ((MOVOL:230V , MOVOL:575V) + COOL:AIR , MOVOL:460V) + CAPPRE:ULCUL + CAPPRM:ASME + FREQ:60HZ)	1X11:2,5

Legend:

CAPPRE:IEC - Component approval electrical:IEC
CAPPRM:ASME - Component approval mechanical:ASME
CAPPRM:MOM - Component approval mechanical:MOM
FREQ:50HZ - Frequency:50 Hz
MODEL:GA90VP_16 - Model:GA 90VSD+
MOVOL:400V - Supply voltage:400 V
MOVOL:575V - Supply voltage:575 V
CAPPRE:ULCUL - Component approval electrical:UL/cUL
CAPPRM:CE - Component approval mechanical:CE
COOL:AIR - Cooling:Air cooled
FREQ:60HZ - Frequency:60 Hz
MOVOL:200V - Supply voltage:200 V
MOVOL:460V - Supply voltage:460 V
CAPPRM:AS1210 - Component approval mechanical:AS1210
CAPPRM:MHLW - Component approval mechanical:MHLW
COOL:WATER - Cooling:Water cooled
IDRY:Y - Integrated dryer:Yes
MOVOL:230V - Supply voltage:230 V
MOVOL:500V - Supply voltage:500 V

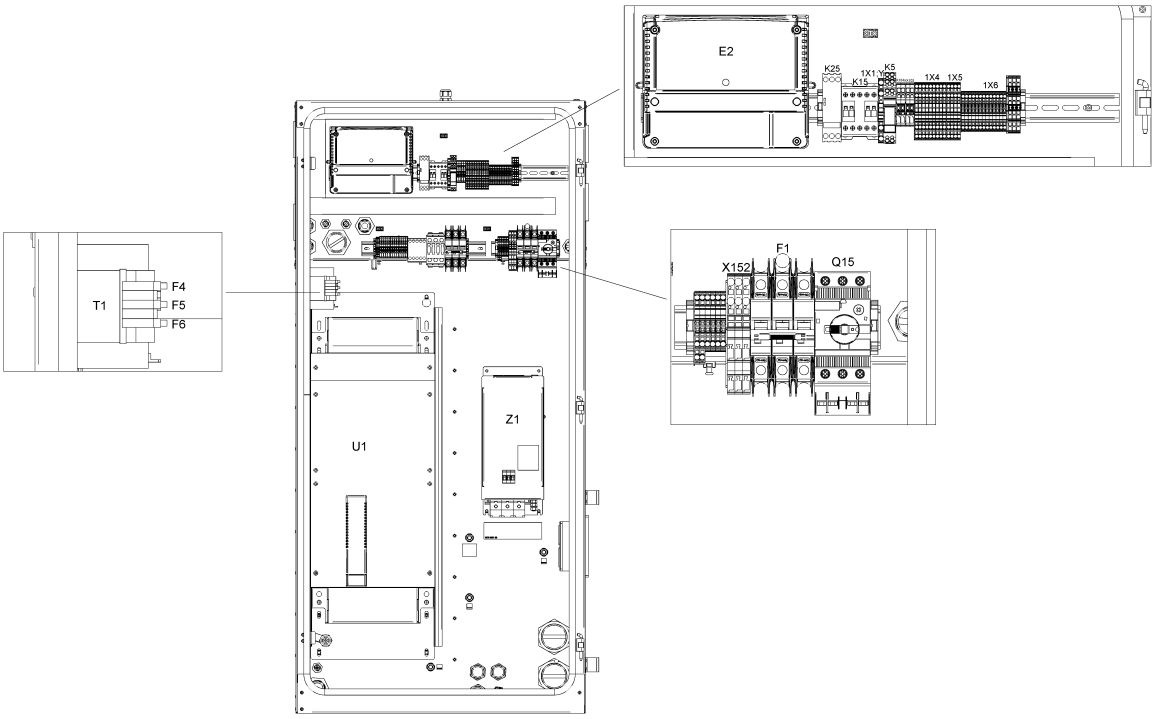
E2
K25
K15
1X1
K5
1X4
1X5
1X6
T1
F4
F5
F6
X152
F1
Q15
U1
Z1

21.19 - Cubicle components GA 90 VSD+ - (200V-400V-500V/50Hz, 460V/60Hz - IEC, 230V-460V-575V/60Hz - UL-cUL) - Full-Feature (17/12/2019 - ...)

(((MOVOL:200V , MOVOL:400V , MOVOL:500V) + FREQ:50HZ , FREQ:60HZ + MOVOL:460V) + CAPPRE:IEC , (MOVOL:230V , MOVOL:460V , MOVOL:575V) + CAPPRE:ULCUL + FREQ:60HZ) + IDRY:Y + MODEL:GA90VP_16

Ref	Part Number	Qty	Name	Validity	EL
	1088 0039 40	1	PLATE	**(25/02/2019 - 16/12/2019)** (((CAPPRM:AS1210 , CAPPRM:CE , CAPPRM:MHLW , CAPPRM:MOM) + FREQ:50HZ + MOVOL:400V , (CAPPRM:ASME , CAPPRM:MHLW) + FREQ:60HZ + MOVOL:460V) + CAPPRE:IEC , CAPPRE:ULCUL + CAPPRM:ASME + FREQ:60HZ + MOVOL:460V) + COOL:WATER **(17/12/2019 - ...)** ((((CAPPRM:AS1210 , CAPPRM:CE , CAPPRM:MHLW , CAPPRM:MOM) + MOVOL:400V , (CAPPRM:CE + MOVOL:500V , CAPPRM:MHLW + MOVOL:200V) + COOL:AIR) + FREQ:50HZ , (CAPPRM:ASME , CAPPRM:MHLW) + FREQ:60HZ + MOVOL:460V) + CAPPRE:IEC , ((MOVOL:230V , MOVOL:575V) + COOL:AIR , MOVOL:460V) + CAPPRE:ULCUL + CAPPRM:ASME + FREQ:60HZ)	1X11
	1088 0039 34	4	TERMINAL	**(25/02/2019 - 16/12/2019)** (((CAPPRM:AS1210 , CAPPRM:CE , CAPPRM:MHLW , CAPPRM:MOM) + FREQ:50HZ + MOVOL:400V , (CAPPRM:ASME , CAPPRM:MHLW) + FREQ:60HZ + MOVOL:460V) + CAPPRE:IEC , CAPPRE:ULCUL + CAPPRM:ASME + FREQ:60HZ + MOVOL:460V) + COOL:WATER **(17/12/2019 - ...)** ((((CAPPRM:AS1210 , CAPPRM:CE , CAPPRM:MHLW , CAPPRM:MOM) + MOVOL:400V , (CAPPRM:CE + MOVOL:500V , CAPPRM:MHLW + MOVOL:200V) + COOL:AIR) + FREQ:50HZ , (CAPPRM:ASME , CAPPRM:MHLW) + FREQ:60HZ + MOVOL:460V) + CAPPRE:IEC , ((MOVOL:230V , MOVOL:575V) + COOL:AIR , MOVOL:460V) + CAPPRE:ULCUL + CAPPRM:ASME + FREQ:60HZ)	
	Electrical legend:	1X11:30,301,34			
	1088 0039 35	1	PLATE	**(25/02/2019 - 16/12/2019)** (((CAPPRM:AS1210 , CAPPRM:CE , CAPPRM:MHLW , CAPPRM:MOM) + FREQ:50HZ + MOVOL:400V , (CAPPRM:ASME , CAPPRM:MHLW) + FREQ:60HZ + MOVOL:460V) + CAPPRE:IEC , CAPPRE:ULCUL + CAPPRM:ASME + FREQ:60HZ + MOVOL:460V) + COOL:WATER **(17/12/2019 - ...)** ((((CAPPRM:AS1210 , CAPPRM:CE , CAPPRM:MHLW , CAPPRM:MOM) + MOVOL:400V , (CAPPRM:CE + MOVOL:500V , CAPPRM:MHLW + MOVOL:200V) + COOL:AIR) + FREQ:50HZ , (CAPPRM:ASME , CAPPRM:MHLW) + FREQ:60HZ + MOVOL:460V) + CAPPRE:IEC , ((MOVOL:230V , MOVOL:575V) + COOL:AIR , MOVOL:460V) + CAPPRE:ULCUL + CAPPRM:ASME + FREQ:60HZ)	1X11
	1088 0039 04	2	TERMINAL	**(25/02/2019 - 16/12/2019)** (((CAPPRM:AS1210 , CAPPRM:CE , CAPPRM:MHLW , CAPPRM:MOM) + FREQ:50HZ + MOVOL:400V , (CAPPRM:ASME , CAPPRM:MHLW) + FREQ:60HZ + MOVOL:460V) + CAPPRE:IEC , CAPPRE:ULCUL + CAPPRM:ASME + FREQ:60HZ + MOVOL:460V) + COOL:WATER **(17/12/2019 - ...)** ((((CAPPRM:AS1210 , CAPPRM:CE , CAPPRM:MHLW , CAPPRM:MOM) + MOVOL:400V , (CAPPRM:CE + MOVOL:500V , CAPPRM:MHLW + MOVOL:200V) + COOL:AIR) + FREQ:50HZ , (CAPPRM:ASME , CAPPRM:MHLW) + FREQ:60HZ + MOVOL:460V) + CAPPRE:IEC , ((MOVOL:230V , MOVOL:575V) + COOL:AIR , MOVOL:460V) + CAPPRE:ULCUL + CAPPRM:ASME + FREQ:60HZ)	X104a

Legend:

CAPPRE:IEC - Component approval electrical:IEC
CAPPRE:ULCUL - Component approval electrical:UL/cUL
CAPPRM:AS1210 - Component approval mechanical:AS1210
CAPPRM:ASME - Component approval mechanical:ASME
CAPPRM:CE - Component approval mechanical:CE
CAPPRM:MHLW - Component approval mechanical:MHLW
CAPPRM:MOM - Component approval mechanical:MOM
COOL:AIR - Cooling:Air cooled
COOL:WATER - Cooling:Water cooled
FREQ:50HZ - Frequency:50 Hz
FREQ:60HZ - Frequency:60 Hz
IDRY:Y - Integrated dryer:Yes
MODEL:GA90VP_16 - Model:GA 90VSD+
MOVOL:200V - Supply voltage:200 V
MOVOL:230V - Supply voltage:230 V
MOVOL:400V - Supply voltage:400 V
MOVOL:460V - Supply voltage:460 V
MOVOL:500V - Supply voltage:500 V
MOVOL:575V - Supply voltage:575 V

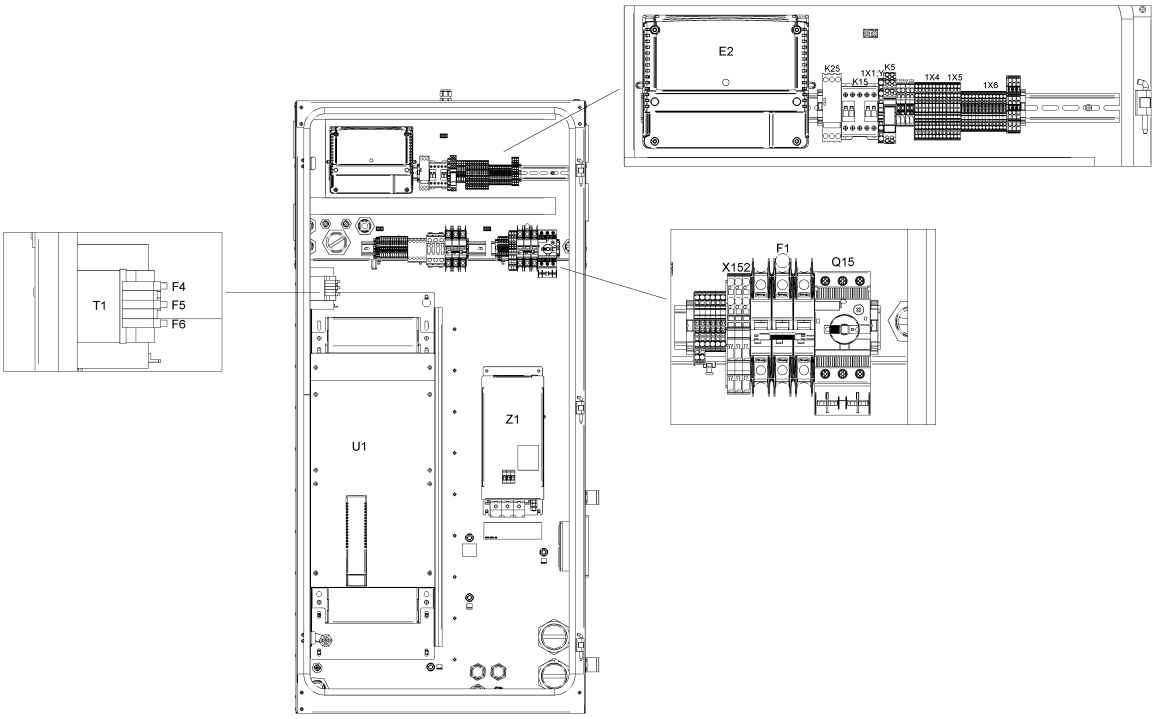
E2
K25
K15
1X1
K5
1X4
1X5
1X6
T1
F4
F5
F6
X152
F1
Q15
U1
Z1

21.19 - Cubicle components GA 90 VSD+ - (200V-400V-500V/50Hz, 460V/60Hz - IEC, 230V-460V-575V/60Hz - UL-cUL) - Full-Feature (17/12/2019 - ...)

(((MOVOL:200V , MOVOL:400V , MOVOL:500V) + FREQ:50HZ , FREQ:60HZ + MOVOL:460V) + CAPPRE:IEC , (MOVOL:230V , MOVOL:460V , MOVOL:575V) + CAPPRE:ULCUL + FREQ:60HZ) + IDRY:Y + MODEL:GA90VP_16

Ref	Part Number	Qty	Name	Validity	EL
	1088 0037 99	2	PIN	**(25/02/2019 - 16/12/2019)** (((CAPPRM:AS1210 , CAPPRM:CE , CAPPRM:MHLW , CAPPRM:MOM) + FREQ:50HZ + MOVOL:400V , (CAPPRM:ASME , CAPPRM:MHLW) + FREQ:60HZ + MOVOL:460V) + CAPPRE:IEC , CAPPRE:ULCUL + CAPPRM:ASME + FREQ:60HZ + MOVOL:460V) + COOL:WATER **(17/12/2019 - ...)** ((((CAPPRM:AS1210 , CAPPRM:CE , CAPPRM:MHLW , CAPPRM:MOM) + MOVOL:400V , (CAPPRM:CE + MOVOL:500V , CAPPRM:MHLW + MOVOL:200V) + COOL:AIR) + FREQ:50HZ , (CAPPRM:ASME , CAPPRM:MHLW) + FREQ:60HZ + MOVOL:460V) + CAPPRE:IEC , ((MOVOL:230V , MOVOL:575V) + COOL:AIR , MOVOL:460V) + CAPPRE:ULCUL + CAPPRM:ASME + FREQ:60HZ)	X104a/X105
	1088 0039 02	1	PLATE	**(25/02/2019 - 16/12/2019)** (((CAPPRM:AS1210 , CAPPRM:CE , CAPPRM:MHLW , CAPPRM:MOM) + FREQ:50HZ + MOVOL:400V , (CAPPRM:ASME , CAPPRM:MHLW) + FREQ:60HZ + MOVOL:460V) + CAPPRE:IEC , CAPPRE:ULCUL + CAPPRM:ASME + FREQ:60HZ + MOVOL:460V) + COOL:WATER **(17/12/2019 - ...)** ((((CAPPRM:AS1210 , CAPPRM:CE , CAPPRM:MHLW , CAPPRM:MOM) + MOVOL:400V , (CAPPRM:CE + MOVOL:500V , CAPPRM:MHLW + MOVOL:200V) + COOL:AIR) + FREQ:50HZ , (CAPPRM:ASME , CAPPRM:MHLW) + FREQ:60HZ + MOVOL:460V) + CAPPRE:IEC , ((MOVOL:230V , MOVOL:575V) + COOL:AIR , MOVOL:460V) + CAPPRE:ULCUL + CAPPRM:ASME + FREQ:60HZ)	X104a
	1088 0039 07	2	TERMINAL	**(25/02/2019 - 16/12/2019)** (((CAPPRM:AS1210 , CAPPRM:CE , CAPPRM:MHLW , CAPPRM:MOM) + FREQ:50HZ + MOVOL:400V , (CAPPRM:ASME , CAPPRM:MHLW) + FREQ:60HZ + MOVOL:460V) + CAPPRE:IEC , CAPPRE:ULCUL + CAPPRM:ASME + FREQ:60HZ + MOVOL:460V) + COOL:WATER **(17/12/2019 - ...)** ((((CAPPRM:AS1210 , CAPPRM:CE , CAPPRM:MHLW , CAPPRM:MOM) + MOVOL:400V , (CAPPRM:CE + MOVOL:500V , CAPPRM:MHLW + MOVOL:200V) + COOL:AIR) + FREQ:50HZ , (CAPPRM:ASME , CAPPRM:MHLW) + FREQ:60HZ + MOVOL:460V) + CAPPRE:IEC , ((MOVOL:230V , MOVOL:575V) + COOL:AIR , MOVOL:460V) + CAPPRE:ULCUL + CAPPRM:ASME + FREQ:60HZ)	X105
	1088 0039 05	1	PLATE	**(25/02/2019 - 16/12/2019)** (((CAPPRM:AS1210 , CAPPRM:CE , CAPPRM:MHLW , CAPPRM:MOM) + FREQ:50HZ + MOVOL:400V , (CAPPRM:ASME , CAPPRM:MHLW) + FREQ:60HZ + MOVOL:460V) + CAPPRE:IEC , CAPPRE:ULCUL + CAPPRM:ASME + FREQ:60HZ + MOVOL:460V) + COOL:WATER **(17/12/2019 - ...)** ((((CAPPRM:AS1210 , CAPPRM:CE , CAPPRM:MHLW , CAPPRM:MOM) + MOVOL:400V , (CAPPRM:CE + MOVOL:500V , CAPPRM:MHLW + MOVOL:200V) + COOL:AIR) + FREQ:50HZ , (CAPPRM:ASME , CAPPRM:MHLW) + FREQ:60HZ + MOVOL:460V) + CAPPRE:IEC , ((MOVOL:230V , MOVOL:575V) + COOL:AIR , MOVOL:460V) + CAPPRE:ULCUL + CAPPRM:ASME + FREQ:60HZ)	X105

Legend:

CAPPRE:IEC - Component approval electrical:IEC
CAPPRE:ULCUL - Component approval electrical:UL/cUL
CAPPRM:AS1210 - Component approval mechanical:AS1210
CAPPRM:ASME - Component approval mechanical:ASME
CAPPRM:CE - Component approval mechanical:CE
CAPPRM:MHLW - Component approval mechanical:MHLW
CAPPRM:MOM - Component approval mechanical:MOM
COOL:AIR - Cooling:Air cooled
COOL:WATER - Cooling:Water cooled
FREQ:50HZ - Frequency:50 Hz
FREQ:60HZ - Frequency:60 Hz
IDRY:Y - Integrated dryer:Yes
MODEL:GA90VP_16 - Model:GA 90VSD+
MOVOL:200V - Supply voltage:200 V
MOVOL:230V - Supply voltage:230 V
MOVOL:400V - Supply voltage:400 V
MOVOL:460V - Supply voltage:460 V
MOVOL:500V - Supply voltage:500 V
MOVOL:575V - Supply voltage:575 V

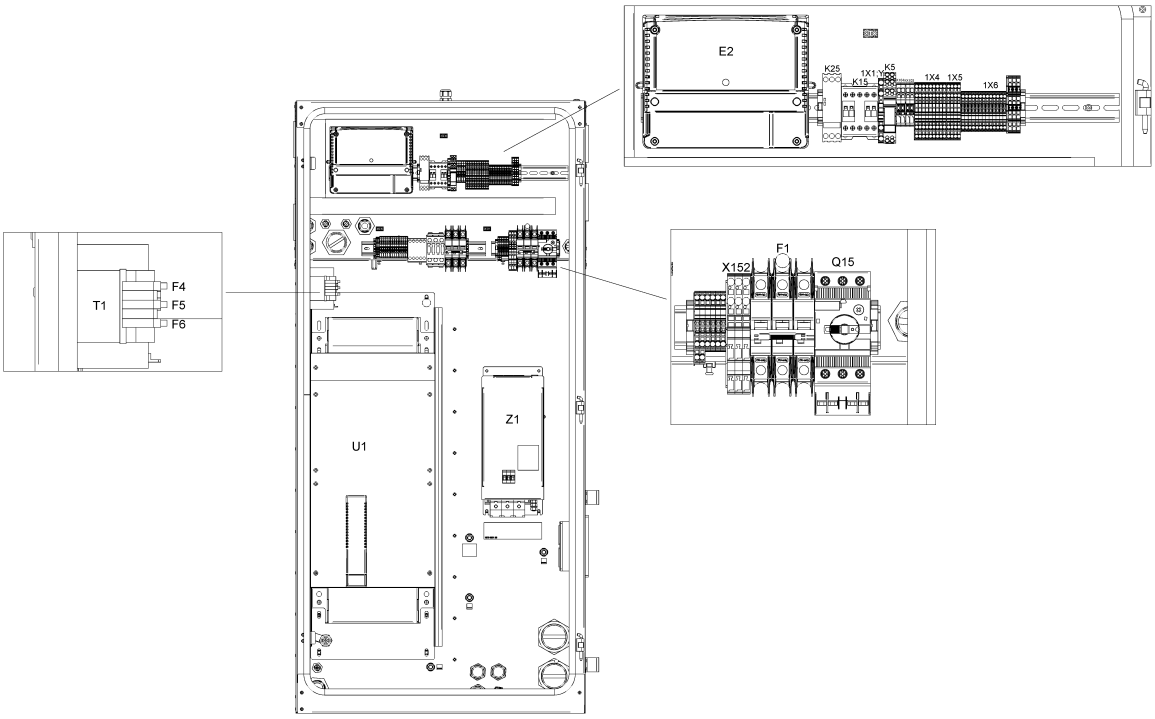
E2
K25
K15
1X1
K5
1X4
1X5
1X6
T1
F4
F5
F6
X152
F1
Q15
U1
Z1

21.19 - Cubicle components GA 90 VSD+ - (200V-400V-500V/50Hz, 460V/60Hz - IEC, 230V-460V-575V/60Hz - UL-cUL) - Full-Feature (17/12/2019 - ...)

(((MOVOL:200V , MOVOL:400V , MOVOL:500V) + FREQ:50HZ , FREQ:60HZ + MOVOL:460V) + CAPPRE:IEC , (MOVOL:230V , MOVOL:460V , MOVOL:575V) + CAPPRE:ULCUL + FREQ:60HZ) + IDRY:Y + MODEL:GA90VP_16

Ref	Part Number	Qty	Name	Validity	EL
	1088 0039 34	13	TERMINAL	**(25/02/2019 - 16/12/2019)** (((CAPPRM:AS1210 , CAPPRM:CE , CAPPRM:MHLW , CAPPRM:MOM) + FREQ:50HZ + MOVOL:400V , (CAPPRM:ASME , CAPPRM:MHLW) + FREQ:60HZ + MOVOL:460V) + CAPPRE:IEC , CAPPRE:ULCUL + CAPPRM:ASME + FREQ:60HZ + MOVOL:460V) + COOL:WATER **(17/12/2019 - ...)** ((((CAPPRM:AS1210 , CAPPRM:CE , CAPPRM:MHLW , CAPPRM:MOM) + MOVOL:400V , (CAPPRM:CE + MOVOL:500V , CAPPRM:MHLW + MOVOL:200V) + COOL:AIR) + FREQ:50HZ , (CAPPRM:ASME , CAPPRM:MHLW) + FREQ:60HZ + MOVOL:460V) + CAPPRE:IEC , ((MOVOL:230V , MOVOL:575V) + COOL:AIR , MOVOL:460V) + CAPPRE:ULCUL + CAPPRM:ASME + FREQ:60HZ)	1X6
	1088 0037 69	3	CONNECTOR	**(25/02/2019 - 16/12/2019)** (((CAPPRM:AS1210 , CAPPRM:CE , CAPPRM:MHLW , CAPPRM:MOM) + FREQ:50HZ + MOVOL:400V , (CAPPRM:ASME , CAPPRM:MHLW) + FREQ:60HZ + MOVOL:460V) + CAPPRE:IEC , CAPPRE:ULCUL + CAPPRM:ASME + FREQ:60HZ + MOVOL:460V) + COOL:WATER **(17/12/2019 - ...)** ((((CAPPRM:AS1210 , CAPPRM:CE , CAPPRM:MHLW , CAPPRM:MOM) + MOVOL:400V , (CAPPRM:CE + MOVOL:500V , CAPPRM:MHLW + MOVOL:200V) + COOL:AIR) + FREQ:50HZ , (CAPPRM:ASME , CAPPRM:MHLW) + FREQ:60HZ + MOVOL:460V) + CAPPRE:IEC , ((MOVOL:230V , MOVOL:575V) + COOL:AIR , MOVOL:460V) + CAPPRE:ULCUL + CAPPRM:ASME + FREQ:60HZ)	1X7
	1088 0039 35	1	PLATE	**(25/02/2019 - 16/12/2019)** (((CAPPRM:AS1210 , CAPPRM:CE , CAPPRM:MHLW , CAPPRM:MOM) + FREQ:50HZ + MOVOL:400V , (CAPPRM:ASME , CAPPRM:MHLW) + FREQ:60HZ + MOVOL:460V) + CAPPRE:IEC , CAPPRE:ULCUL + CAPPRM:ASME + FREQ:60HZ + MOVOL:460V) + COOL:WATER **(17/12/2019 - ...)** ((((CAPPRM:AS1210 , CAPPRM:CE , CAPPRM:MHLW , CAPPRM:MOM) + MOVOL:400V , (CAPPRM:CE + MOVOL:500V , CAPPRM:MHLW + MOVOL:200V) + COOL:AIR) + FREQ:50HZ , (CAPPRM:ASME , CAPPRM:MHLW) + FREQ:60HZ + MOVOL:460V) + CAPPRE:IEC , ((MOVOL:230V , MOVOL:575V) + COOL:AIR , MOVOL:460V) + CAPPRE:ULCUL + CAPPRM:ASME + FREQ:60HZ)	1X6
	1088 0040 37	1	END PLATE	**(25/02/2019 - 16/12/2019)** (((CAPPRM:AS1210 , CAPPRM:CE , CAPPRM:MHLW , CAPPRM:MOM) + FREQ:50HZ + MOVOL:400V , (CAPPRM:ASME , CAPPRM:MHLW) + FREQ:60HZ + MOVOL:460V) + CAPPRE:IEC , CAPPRE:ULCUL + CAPPRM:ASME + FREQ:60HZ + MOVOL:460V) + COOL:WATER **(17/12/2019 - ...)** ((((CAPPRM:AS1210 , CAPPRM:CE , CAPPRM:MHLW , CAPPRM:MOM) + MOVOL:400V , (CAPPRM:CE + MOVOL:500V , CAPPRM:MHLW + MOVOL:200V) + COOL:AIR) + FREQ:50HZ , (CAPPRM:ASME , CAPPRM:MHLW) + FREQ:60HZ + MOVOL:460V) + CAPPRE:IEC , ((MOVOL:230V , MOVOL:575V) + COOL:AIR , MOVOL:460V) + CAPPRE:ULCUL + CAPPRM:ASME + FREQ:60HZ)	1X7

Legend:

CAPPRE:IEC - Component approval electrical:IEC
CAPPRE:ULCUL - Component approval electrical:UL/cUL
CAPPRM:AS1210 - Component approval mechanical:AS1210
CAPPRM:ASME - Component approval mechanical:ASME
CAPPRM:CE - Component approval mechanical:CE
CAPPRM:MHLW - Component approval mechanical:MHLW
CAPPRM:MOM - Component approval mechanical:MOM
COOL:AIR - Cooling:Air cooled
COOL:WATER - Cooling:Water cooled
FREQ:50HZ - Frequency:50 Hz
FREQ:60HZ - Frequency:60 Hz
IDRY:Y - Integrated dryer:Yes
MODEL:GA90VP_16 - Model:GA 90VSD+
MOVOL:200V - Supply voltage:200 V
MOVOL:230V - Supply voltage:230 V
MOVOL:400V - Supply voltage:400 V
MOVOL:460V - Supply voltage:460 V
MOVOL:500V - Supply voltage:500 V
MOVOL:575V - Supply voltage:575 V

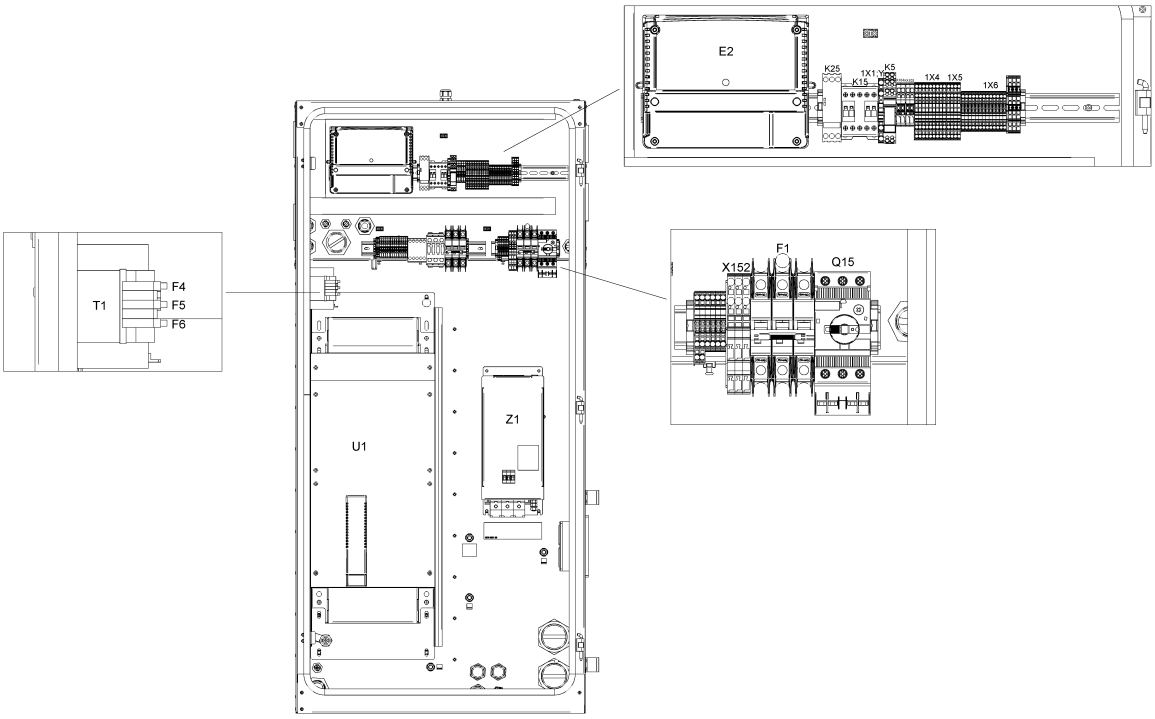
E2
K25
K15
1X1
K5
1X4
1X5
1X6
T1
F4
F5
F6
X152
F1
Q15
U1
Z1

21.19 - Cubicle components GA 90 VSD+ - (200V-400V-500V/50Hz, 460V/60Hz - IEC, 230V-460V-575V/60Hz - UL-cUL) - Full-Feature (17/12/2019 - ...)

(((MOVOL:200V , MOVOL:400V , MOVOL:500V) + FREQ:50HZ , FREQ:60HZ + MOVOL:460V) + CAPPRE:IEC , (MOVOL:230V , MOVOL:460V , MOVOL:575V) + CAPPRE:ULCUL + FREQ:60HZ) + IDRY:Y + MODEL:GA90VP_16

Ref	Part Number	Qty	Name	Validity	EL
	1088 0039 36	9	TERMINAL	**(25/02/2019 - 16/12/2019)** (((CAPPRM:AS1210 , CAPPRM:CE , CAPPRM:MHLW , CAPPRM:MOM) + FREQ:50HZ + MOVOL:400V , (CAPPRM:ASME , CAPPRM:MHLW) + FREQ:60HZ + MOVOL:460V) + CAPPRE:IEC , CAPPRE:ULCUL + CAPPRM:ASME + FREQ:60HZ + MOVOL:460V) + COOL:WATER **(17/12/2019 - ...)** ((((CAPPRM:AS1210 , CAPPRM:CE , CAPPRM:MHLW , CAPPRM:MOM) + MOVOL:400V , (CAPPRM:CE + MOVOL:500V , CAPPRM:MHLW + MOVOL:200V) + COOL:AIR) + FREQ:50HZ , (CAPPRM:ASME , CAPPRM:MHLW) + FREQ:60HZ + MOVOL:460V) + CAPPRE:IEC , ((MOVOL:230V , MOVOL:575V) + COOL:AIR , MOVOL:460V) + CAPPRE:ULCUL + CAPPRM:ASME + FREQ:60HZ)	1X4
	1088 0039 36	4	TERMINAL	**(25/02/2019 - 16/12/2019)** (((CAPPRM:AS1210 , CAPPRM:CE , CAPPRM:MHLW , CAPPRM:MOM) + FREQ:50HZ + MOVOL:400V , (CAPPRM:ASME , CAPPRM:MHLW) + FREQ:60HZ + MOVOL:460V) + CAPPRE:IEC , CAPPRE:ULCUL + CAPPRM:ASME + FREQ:60HZ + MOVOL:460V) + COOL:WATER **(17/12/2019 - ...)** ((((CAPPRM:AS1210 , CAPPRM:CE , CAPPRM:MHLW , CAPPRM:MOM) + MOVOL:400V , (CAPPRM:CE + MOVOL:500V , CAPPRM:MHLW + MOVOL:200V) + COOL:AIR) + FREQ:50HZ , (CAPPRM:ASME , CAPPRM:MHLW) + FREQ:60HZ + MOVOL:460V) + CAPPRE:IEC , ((MOVOL:230V , MOVOL:575V) + COOL:AIR , MOVOL:460V) + CAPPRE:ULCUL + CAPPRM:ASME + FREQ:60HZ)	1X6
	1088 0039 37	1	END PLATE	**(25/02/2019 - 16/12/2019)** (((CAPPRM:AS1210 , CAPPRM:CE , CAPPRM:MHLW , CAPPRM:MOM) + FREQ:50HZ + MOVOL:400V , (CAPPRM:ASME , CAPPRM:MHLW) + FREQ:60HZ + MOVOL:460V) + CAPPRE:IEC , CAPPRE:ULCUL + CAPPRM:ASME + FREQ:60HZ + MOVOL:460V) + COOL:WATER **(17/12/2019 - ...)** ((((CAPPRM:AS1210 , CAPPRM:CE , CAPPRM:MHLW , CAPPRM:MOM) + MOVOL:400V , (CAPPRM:CE + MOVOL:500V , CAPPRM:MHLW + MOVOL:200V) + COOL:AIR) + FREQ:50HZ , (CAPPRM:ASME , CAPPRM:MHLW) + FREQ:60HZ + MOVOL:460V) + CAPPRE:IEC , ((MOVOL:230V , MOVOL:575V) + COOL:AIR , MOVOL:460V) + CAPPRE:ULCUL + CAPPRM:ASME + FREQ:60HZ)	1X4
	1088 0039 37	1	END PLATE	**(25/02/2019 - 16/12/2019)** (((CAPPRM:AS1210 , CAPPRM:CE , CAPPRM:MHLW , CAPPRM:MOM) + FREQ:50HZ + MOVOL:400V , (CAPPRM:ASME , CAPPRM:MHLW) + FREQ:60HZ + MOVOL:460V) + CAPPRE:IEC , CAPPRE:ULCUL + CAPPRM:ASME + FREQ:60HZ + MOVOL:460V) + COOL:WATER **(17/12/2019 - ...)** ((((CAPPRM:AS1210 , CAPPRM:CE , CAPPRM:MHLW , CAPPRM:MOM) + MOVOL:400V , (CAPPRM:CE + MOVOL:500V , CAPPRM:MHLW + MOVOL:200V) + COOL:AIR) + FREQ:50HZ , (CAPPRM:ASME , CAPPRM:MHLW) + FREQ:60HZ + MOVOL:460V) + CAPPRE:IEC , ((MOVOL:230V , MOVOL:575V) + COOL:AIR , MOVOL:460V) + CAPPRE:ULCUL + CAPPRM:ASME + FREQ:60HZ)	1X6

Legend:

CAPPRE:IEC - Component approval electrical:IEC
CAPPRE:ULCUL - Component approval electrical:UL/cUL
CAPPRM:AS1210 - Component approval mechanical:AS1210
CAPPRM:ASME - Component approval mechanical:ASME
CAPPRM:CE - Component approval mechanical:CE
CAPPRM:MHLW - Component approval mechanical:MHLW
CAPPRM:MOM - Component approval mechanical:MOM
COOL:AIR - Cooling:Air cooled
COOL:WATER - Cooling:Water cooled
FREQ:50HZ - Frequency:50 Hz
FREQ:60HZ - Frequency:60 Hz
IDRY:Y - Integrated dryer:Yes
MODEL:GA90VP_16 - Model:GA 90VSD+
MOVOL:200V - Supply voltage:200 V
MOVOL:230V - Supply voltage:230 V
MOVOL:400V - Supply voltage:400 V
MOVOL:460V - Supply voltage:460 V
MOVOL:500V - Supply voltage:500 V
MOVOL:575V - Supply voltage:575 V

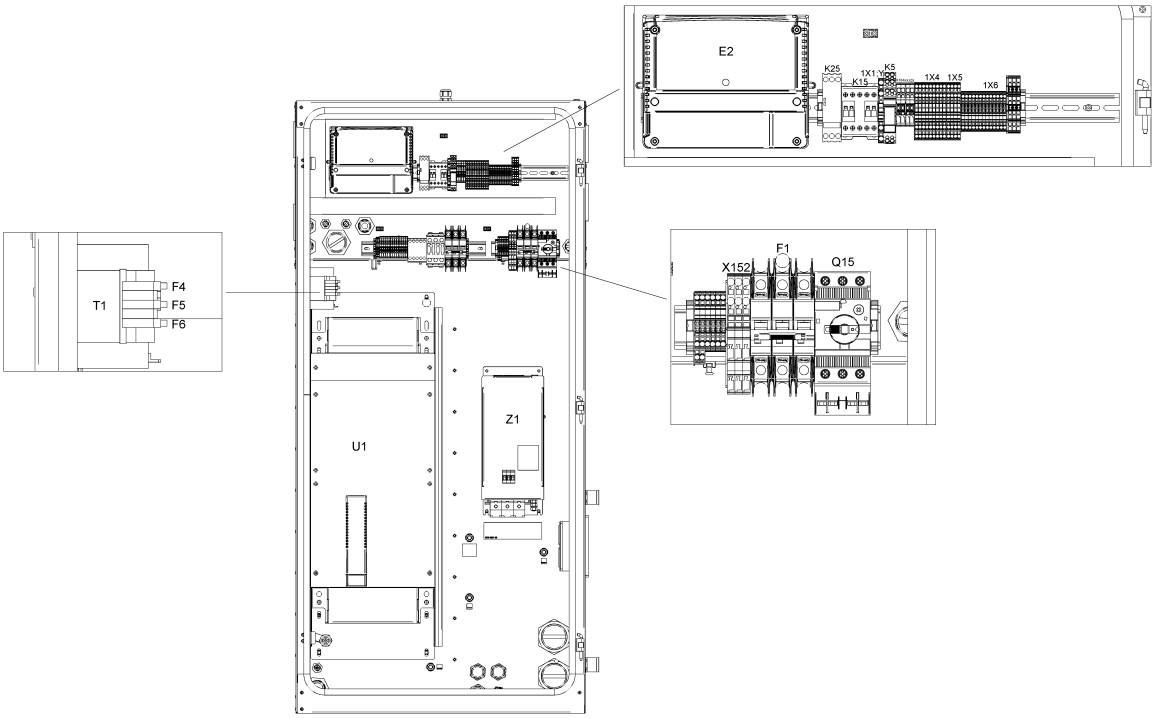
E2
K25
K15
1X1
K5
1X4
1X5
1X6
T1
F4
F5
F6
X152
F1
Q15
U1
Z1

21.19 - Cubicle components GA 90 VSD+ - (200V-400V-500V/50Hz, 460V/60Hz - IEC, 230V-460V-575V/60Hz - UL-cUL) - Full-Feature (17/12/2019 - ...)

(((MOVOL:200V , MOVOL:400V , MOVOL:500V) + FREQ:50HZ , FREQ:60HZ + MOVOL:460V) + CAPPRE:IEC , (MOVOL:230V , MOVOL:460V , MOVOL:575V) + CAPPRE:ULCUL + FREQ:60HZ) + IDRY:Y + MODEL:GA90VP_16

Ref	Part Number	Qty	Name	Validity	EL
	1088 0039 37	1	END PLATE	**(25/02/2019 - 16/12/2019)** (((CAPPRM:AS1210 , CAPPRM:CE , CAPPRM:MHLW , CAPPRM:MOM) + FREQ:50HZ + MOVOL:400V , (CAPPRM:ASME , CAPPRM:MHLW) + FREQ:60HZ + MOVOL:460V) + CAPPRE:IEC , CAPPRE:ULCUL + CAPPRM:ASME + FREQ:60HZ + MOVOL:460V) + COOL:WATER **(17/12/2019 - ...)** ((((CAPPRM:AS1210 , CAPPRM:CE , CAPPRM:MHLW , CAPPRM:MOM) + MOVOL:400V , (CAPPRM:CE + MOVOL:500V , CAPPRM:MHLW + MOVOL:200V) + COOL:AIR) + FREQ:50HZ , (CAPPRM:ASME , CAPPRM:MHLW) + FREQ:60HZ + MOVOL:460V) + CAPPRE:IEC , ((MOVOL:230V , MOVOL:575V) + COOL:AIR , MOVOL:460V) + CAPPRE:ULCUL + CAPPRM:ASME + FREQ:60HZ)	1X1:Y/D
	1088 0037 81	1	CONNECTOR	**(25/02/2019 - 16/12/2019)** (((CAPPRM:AS1210 , CAPPRM:CE , CAPPRM:MHLW , CAPPRM:MOM) + FREQ:50HZ + MOVOL:400V , (CAPPRM:ASME , CAPPRM:MHLW) + FREQ:60HZ + MOVOL:460V) + CAPPRE:IEC , CAPPRE:ULCUL + CAPPRM:ASME + FREQ:60HZ + MOVOL:460V) + COOL:WATER **(17/12/2019 - ...)** ((((CAPPRM:AS1210 , CAPPRM:CE , CAPPRM:MHLW , CAPPRM:MOM) + MOVOL:400V , (CAPPRM:CE + MOVOL:500V , CAPPRM:MHLW + MOVOL:200V) + COOL:AIR) + FREQ:50HZ , (CAPPRM:ASME , CAPPRM:MHLW) + FREQ:60HZ + MOVOL:460V) + CAPPRE:IEC , ((MOVOL:230V , MOVOL:575V) + COOL:AIR , MOVOL:460V) + CAPPRE:ULCUL + CAPPRM:ASME + FREQ:60HZ)	2X27
	1088 0037 80	1	CONNECTOR	**(25/02/2019 - 16/12/2019)** (((CAPPRM:AS1210 , CAPPRM:CE , CAPPRM:MHLW , CAPPRM:MOM) + FREQ:50HZ + MOVOL:400V , (CAPPRM:ASME , CAPPRM:MHLW) + FREQ:60HZ + MOVOL:460V) + CAPPRE:IEC , CAPPRE:ULCUL + CAPPRM:ASME + FREQ:60HZ + MOVOL:460V) + COOL:WATER **(17/12/2019 - ...)** ((((CAPPRM:AS1210 , CAPPRM:CE , CAPPRM:MHLW , CAPPRM:MOM) + MOVOL:400V , (CAPPRM:CE + MOVOL:500V , CAPPRM:MHLW + MOVOL:200V) + COOL:AIR) + FREQ:50HZ , (CAPPRM:ASME , CAPPRM:MHLW) + FREQ:60HZ + MOVOL:460V) + CAPPRE:IEC , ((MOVOL:230V , MOVOL:575V) + COOL:AIR , MOVOL:460V) + CAPPRE:ULCUL + CAPPRM:ASME + FREQ:60HZ)	2X28
	1088 0031 32	1	CONNECTOR	**(25/02/2019 - 16/12/2019)** (((CAPPRM:AS1210 , CAPPRM:CE , CAPPRM:MHLW , CAPPRM:MOM) + FREQ:50HZ + MOVOL:400V , (CAPPRM:ASME , CAPPRM:MHLW) + FREQ:60HZ + MOVOL:460V) + CAPPRE:IEC , CAPPRE:ULCUL + CAPPRM:ASME + FREQ:60HZ + MOVOL:460V) + COOL:WATER **(17/12/2019 - ...)** ((((CAPPRM:AS1210 , CAPPRM:CE , CAPPRM:MHLW , CAPPRM:MOM) + MOVOL:400V , (CAPPRM:CE + MOVOL:500V , CAPPRM:MHLW + MOVOL:200V) + COOL:AIR) + FREQ:50HZ , (CAPPRM:ASME , CAPPRM:MHLW) + FREQ:60HZ + MOVOL:460V) + CAPPRE:IEC , ((MOVOL:230V , MOVOL:575V) + COOL:AIR , MOVOL:460V) + CAPPRE:ULCUL + CAPPRM:ASME + FREQ:60HZ)	2X30

Legend:

CAPPRE:IEC - Component approval electrical:IEC
CAPPRE:ULCUL - Component approval electrical:UL/cUL
CAPPRM:AS1210 - Component approval mechanical:AS1210
CAPPRM:ASME - Component approval mechanical:ASME
CAPPRM:CE - Component approval mechanical:CE
CAPPRM:MHLW - Component approval mechanical:MHLW
CAPPRM:MOM - Component approval mechanical:MOM
COOL:AIR - Cooling:Air cooled
COOL:WATER - Cooling:Water cooled
FREQ:50HZ - Frequency:50 Hz
FREQ:60HZ - Frequency:60 Hz
IDRY:Y - Integrated dryer:Yes
MODEL:GA90VP_16 - Model:GA 90VSD+
MOVOL:200V - Supply voltage:200 V
MOVOL:230V - Supply voltage:230 V
MOVOL:400V - Supply voltage:400 V
MOVOL:460V - Supply voltage:460 V
MOVOL:500V - Supply voltage:500 V
MOVOL:575V - Supply voltage:575 V

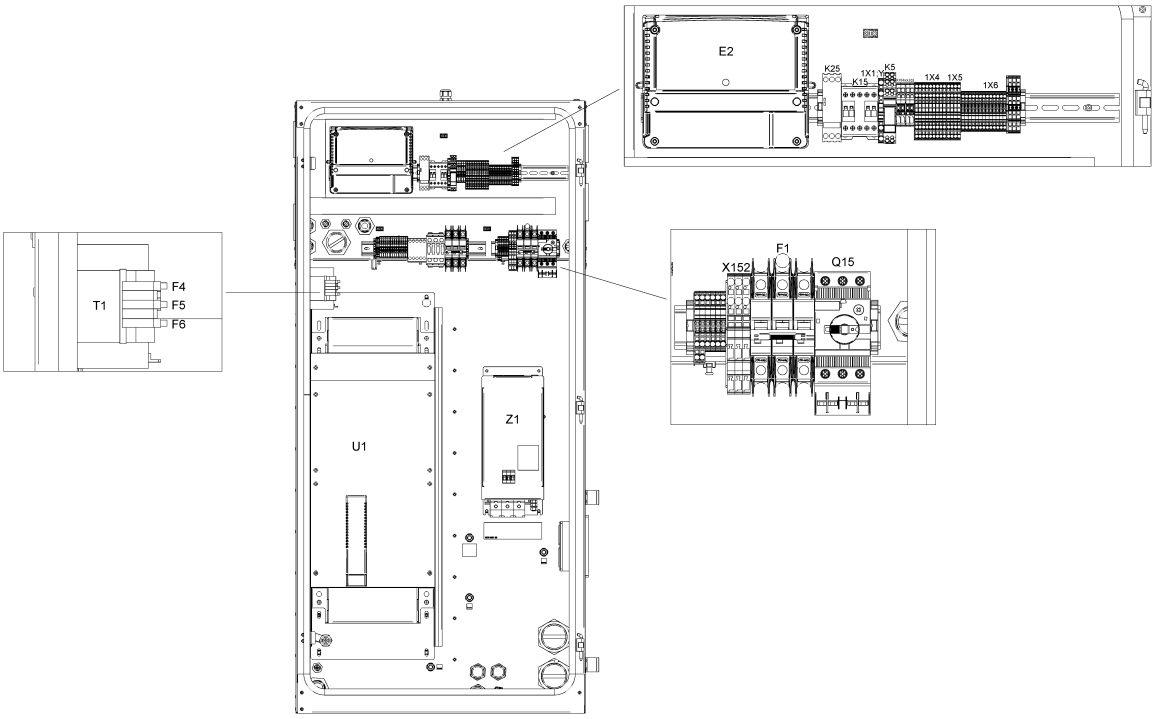
E2
K25
K15
1X1
K5
1X4
1X5
1X6
T1
F4
F5
F6
X152
F1
Q15
U1
Z1

21.19 - Cubicle components GA 90 VSD+ - (200V-400V-500V/50Hz, 460V/60Hz - IEC, 230V-460V-575V/60Hz - UL-cUL) - Full-Feature (17/12/2019 - ...)

(((MOVOL:200V , MOVOL:400V , MOVOL:500V) + FREQ:50HZ , FREQ:60HZ + MOVOL:460V) + CAPPRE:IEC , (MOVOL:230V , MOVOL:460V , MOVOL:575V) + CAPPRE:ULCUL + FREQ:60HZ) + IDRY:Y + MODEL:GA90VP_16

Ref	Part Number	Qty	Name	Validity	EL
	1088 0031 26	1	CONNECTOR 6-POLE	**(25/02/2019 - 16/12/2019)** (((CAPPRM:AS1210 , CAPPRM:CE , CAPPRM:MHLW , CAPPRM:MOM) + FREQ:50HZ + MOVOL:400V , (CAPPRM:ASME , CAPPRM:MHLW) + FREQ:60HZ + MOVOL:460V) + CAPPRE:IEC , CAPPRE:ULCUL + CAPPRM:ASME + FREQ:60HZ + MOVOL:460V) + COOL:WATER **(17/12/2019 - ...)** ((((CAPPRM:AS1210 , CAPPRM:CE , CAPPRM:MHLW , CAPPRM:MOM) + MOVOL:400V , (CAPPRM:CE + MOVOL:500V , CAPPRM:MHLW + MOVOL:200V) + COOL:AIR) + FREQ:50HZ , (CAPPRM:ASME , CAPPRM:MHLW) + FREQ:60HZ + MOVOL:460V) + CAPPRE:IEC , ((MOVOL:230V , MOVOL:575V) + COOL:AIR , MOVOL:460V) + CAPPRE:ULCUL + CAPPRM:ASME + FREQ:60HZ)	2X31
	~~1089 9664 06~~	1	SWITCH	**(25/02/2019 - 16/12/2019)** (((CAPPRM:AS1210 , CAPPRM:CE , CAPPRM:MHLW , CAPPRM:MOM) + FREQ:50HZ + MOVOL:400V , (CAPPRM:ASME , CAPPRM:MHLW) + FREQ:60HZ + MOVOL:460V) + CAPPRE:IEC , CAPPRE:ULCUL + CAPPRM:ASME + FREQ:60HZ + MOVOL:460V) + COOL:WATER **(17/12/2019 - ...)** ((((CAPPRM:AS1210 , CAPPRM:CE , CAPPRM:MHLW , CAPPRM:MOM) + MOVOL:400V , (CAPPRM:CE + MOVOL:500V , CAPPRM:MHLW + MOVOL:200V) + COOL:AIR) + FREQ:50HZ , (CAPPRM:ASME , CAPPRM:MHLW) + FREQ:60HZ + MOVOL:460V) + CAPPRE:IEC , ((MOVOL:230V , MOVOL:575V) + COOL:AIR , MOVOL:460V) + CAPPRE:ULCUL + CAPPRM:ASME + FREQ:60HZ)	Q15
	Substituted by:	1089 9551 97 - AUX.CONTACT CIRCUIT BREAKER (quantity: 1)			
	1089 9551 18	1	CIRCUIT BREAKER	**(25/02/2019 - 16/12/2019)** (((CAPPRM:AS1210 , CAPPRM:CE , CAPPRM:MHLW , CAPPRM:MOM) + FREQ:50HZ + MOVOL:400V , (CAPPRM:ASME , CAPPRM:MHLW) + FREQ:60HZ + MOVOL:460V) + CAPPRE:IEC , CAPPRE:ULCUL + CAPPRM:ASME + FREQ:60HZ + MOVOL:460V) + COOL:WATER **(17/12/2019 - ...)** ((((CAPPRM:AS1210 , CAPPRM:CE , CAPPRM:MHLW , CAPPRM:MOM) + MOVOL:400V , (CAPPRM:CE + MOVOL:500V , CAPPRM:MHLW + MOVOL:200V) + COOL:AIR) + FREQ:50HZ , (CAPPRM:ASME , CAPPRM:MHLW) + FREQ:60HZ + MOVOL:460V) + CAPPRE:IEC , ((MOVOL:230V , MOVOL:575V) + COOL:AIR , MOVOL:460V) + CAPPRE:ULCUL + CAPPRM:ASME + FREQ:60HZ)	Q15
	1088 0038 26	1	TERMINAL	**(25/02/2019 - 16/12/2019)** (((CAPPRM:AS1210 , CAPPRM:CE , CAPPRM:MHLW , CAPPRM:MOM) + FREQ:50HZ + MOVOL:400V , (CAPPRM:ASME , CAPPRM:MHLW) + FREQ:60HZ + MOVOL:460V) + CAPPRE:IEC , CAPPRE:ULCUL + CAPPRM:ASME + FREQ:60HZ + MOVOL:460V) + COOL:WATER **(17/12/2019 - ...)** ((((CAPPRM:AS1210 , CAPPRM:CE , CAPPRM:MHLW , CAPPRM:MOM) + MOVOL:400V , (CAPPRM:CE + MOVOL:500V , CAPPRM:MHLW + MOVOL:200V) + COOL:AIR) + FREQ:50HZ , (CAPPRM:ASME , CAPPRM:MHLW) + FREQ:60HZ + MOVOL:460V) + CAPPRE:IEC , ((MOVOL:230V , MOVOL:575V) + COOL:AIR , MOVOL:460V) + CAPPRE:ULCUL + CAPPRM:ASME + FREQ:60HZ)	1X1:Y/D

Legend:

CAPPRE:IEC - Component approval electrical:IEC
CAPPRE:ULCUL - Component approval electrical:UL/cUL
CAPPRM:AS1210 - Component approval mechanical:AS1210
CAPPRM:ASME - Component approval mechanical:ASME
CAPPRM:CE - Component approval mechanical:CE
CAPPRM:MHLW - Component approval mechanical:MHLW
CAPPRM:MOM - Component approval mechanical:MOM
COOL:AIR - Cooling:Air cooled
COOL:WATER - Cooling:Water cooled
FREQ:50HZ - Frequency:50 Hz
FREQ:60HZ - Frequency:60 Hz
IDRY:Y - Integrated dryer:Yes
MODEL:GA90VP_16 - Model:GA 90VSD+
MOVOL:200V - Supply voltage:200 V
MOVOL:230V - Supply voltage:230 V
MOVOL:400V - Supply voltage:400 V
MOVOL:460V - Supply voltage:460 V
MOVOL:500V - Supply voltage:500 V
MOVOL:575V - Supply voltage:575 V

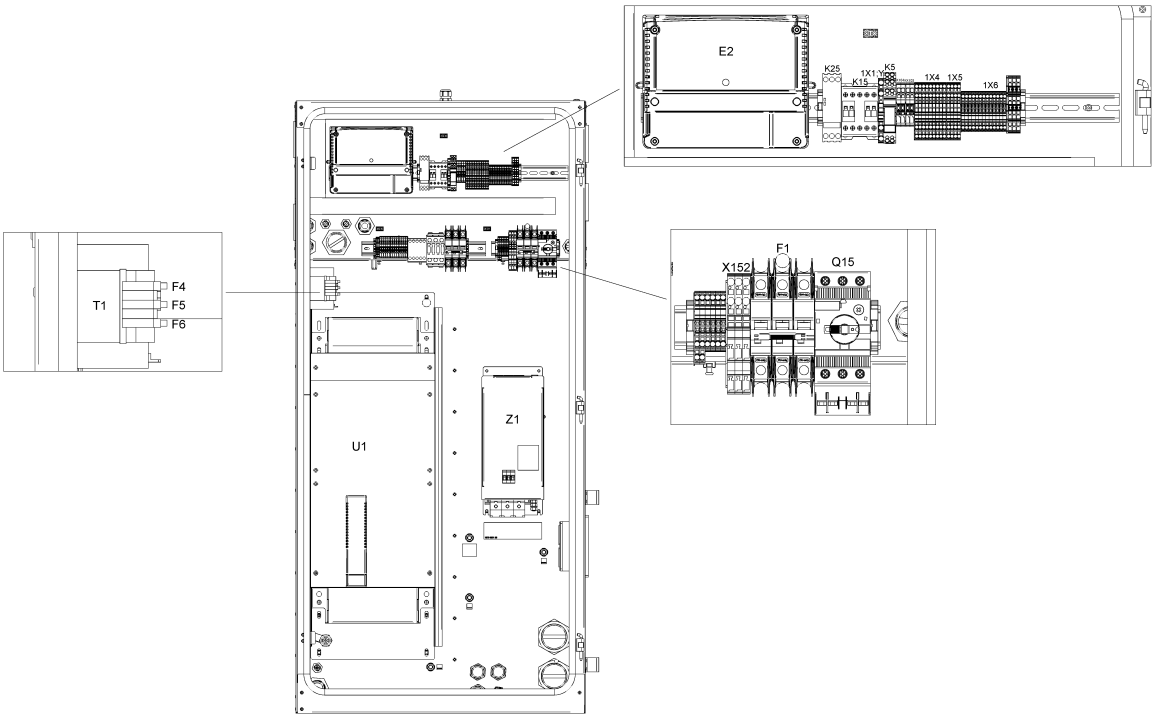
E2
K25
K15
1X1
K5
1X4
1X5
1X6
T1
F4
F5
F6
X152
F1
Q15
U1
Z1

21.19 - Cubicle components GA 90 VSD+ - (200V-400V-500V/50Hz, 460V/60Hz - IEC, 230V-460V-575V/60Hz - UL-cUL) - Full-Feature (17/12/2019 - ...)

(((MOVOL:200V , MOVOL:400V , MOVOL:500V) + FREQ:50HZ , FREQ:60HZ + MOVOL:460V) + CAPPRE:IEC , (MOVOL:230V , MOVOL:460V , MOVOL:575V) + CAPPRE:ULCUL + FREQ:60HZ) + IDRY:Y + MODEL:GA90VP_16

Ref	Part Number	Qty	Name	Validity	EL
	1089 9602 79	1	CONTACTOR 110 V	**(25/02/2019 - 16/12/2019)** (((CAPPRM:AS1210 , CAPPRM:CE , CAPPRM:MHLW , CAPPRM:MOM) + FREQ:50HZ + MOVOL:400V , (CAPPRM:ASME , CAPPRM:MHLW) + FREQ:60HZ + MOVOL:460V) + CAPPRE:IEC , CAPPRE:ULCUL + CAPPRM:ASME + FREQ:60HZ + MOVOL:460V) + COOL:WATER **(17/12/2019 - ...)** ((((CAPPRM:AS1210 , CAPPRM:CE , CAPPRM:MHLW , CAPPRM:MOM) + MOVOL:400V , (CAPPRM:CE + MOVOL:500V , CAPPRM:MHLW + MOVOL:200V) + COOL:AIR) + FREQ:50HZ , (CAPPRM:ASME , CAPPRM:MHLW) + FREQ:60HZ + MOVOL:460V) + CAPPRE:IEC , ((MOVOL:230V , MOVOL:575V) + COOL:AIR , MOVOL:460V) + CAPPRE:ULCUL + CAPPRM:ASME + FREQ:60HZ)	K15
	1089 9461 26	1	PHASE SEQUENCE RELAY	**(25/02/2019 - 16/12/2019)** (((CAPPRM:AS1210 , CAPPRM:CE , CAPPRM:MHLW , CAPPRM:MOM) + FREQ:50HZ + MOVOL:400V , (CAPPRM:ASME , CAPPRM:MHLW) + FREQ:60HZ + MOVOL:460V) + CAPPRE:IEC , CAPPRE:ULCUL + CAPPRM:ASME + FREQ:60HZ + MOVOL:460V) + COOL:WATER **(17/12/2019 - ...)** ((((CAPPRM:AS1210 , CAPPRM:CE , CAPPRM:MHLW , CAPPRM:MOM) + MOVOL:400V , (CAPPRM:CE + MOVOL:500V , CAPPRM:MHLW + MOVOL:200V) + COOL:AIR) + FREQ:50HZ , (CAPPRM:ASME , CAPPRM:MHLW) + FREQ:60HZ + MOVOL:460V) + CAPPRE:IEC , ((MOVOL:230V , MOVOL:575V) + COOL:AIR , MOVOL:460V) + CAPPRE:ULCUL + CAPPRM:ASME + FREQ:60HZ)	K25
	1088 0032 17	1	RELAY 115 VAC	**(25/02/2019 - 16/12/2019)** (((CAPPRM:AS1210 , CAPPRM:CE , CAPPRM:MHLW , CAPPRM:MOM) + FREQ:50HZ + MOVOL:400V , (CAPPRM:ASME , CAPPRM:MHLW) + FREQ:60HZ + MOVOL:460V) + CAPPRE:IEC , CAPPRE:ULCUL + CAPPRM:ASME + FREQ:60HZ + MOVOL:460V) + COOL:WATER **(17/12/2019 - ...)** ((((CAPPRM:AS1210 , CAPPRM:CE , CAPPRM:MHLW , CAPPRM:MOM) + MOVOL:400V , (CAPPRM:CE + MOVOL:500V , CAPPRM:MHLW + MOVOL:200V) + COOL:AIR) + FREQ:50HZ , (CAPPRM:ASME , CAPPRM:MHLW) + FREQ:60HZ + MOVOL:460V) + CAPPRE:IEC , ((MOVOL:230V , MOVOL:575V) + COOL:AIR , MOVOL:460V) + CAPPRE:ULCUL + CAPPRM:ASME + FREQ:60HZ)	K5
	0991 8011 21	AR	CABLE TRAY	**(25/02/2019 - 16/12/2019)** (((CAPPRM:AS1210 , CAPPRM:CE , CAPPRM:MHLW , CAPPRM:MOM) + FREQ:50HZ + MOVOL:400V , (CAPPRM:ASME , CAPPRM:MHLW) + FREQ:60HZ + MOVOL:460V) + CAPPRE:IEC , CAPPRE:ULCUL + CAPPRM:ASME + FREQ:60HZ + MOVOL:460V) + COOL:WATER **(17/12/2019 - ...)** ((((CAPPRM:AS1210 , CAPPRM:CE , CAPPRM:MHLW , CAPPRM:MOM) + MOVOL:400V , (CAPPRM:CE + MOVOL:500V , CAPPRM:MHLW + MOVOL:200V) + COOL:AIR) + FREQ:50HZ , (CAPPRM:ASME , CAPPRM:MHLW) + FREQ:60HZ + MOVOL:460V) + CAPPRE:IEC , ((MOVOL:230V , MOVOL:575V) + COOL:AIR , MOVOL:460V) + CAPPRE:ULCUL + CAPPRM:ASME + FREQ:60HZ)	L=1384mm

Legend:

CAPPRE:IEC - Component approval electrical:IEC
CAPPRE:ULCUL - Component approval electrical:UL/cUL
CAPPRM:AS1210 - Component approval mechanical:AS1210
CAPPRM:ASME - Component approval mechanical:ASME
CAPPRM:CE - Component approval mechanical:CE
CAPPRM:MHLW - Component approval mechanical:MHLW
CAPPRM:MOM - Component approval mechanical:MOM
COOL:AIR - Cooling:Air cooled
COOL:WATER - Cooling:Water cooled
FREQ:50HZ - Frequency:50 Hz
FREQ:60HZ - Frequency:60 Hz
IDRY:Y - Integrated dryer:Yes
MODEL:GA90VP_16 - Model:GA 90VSD+
MOVOL:200V - Supply voltage:200 V
MOVOL:230V - Supply voltage:230 V
MOVOL:400V - Supply voltage:400 V
MOVOL:460V - Supply voltage:460 V
MOVOL:500V - Supply voltage:500 V
MOVOL:575V - Supply voltage:575 V

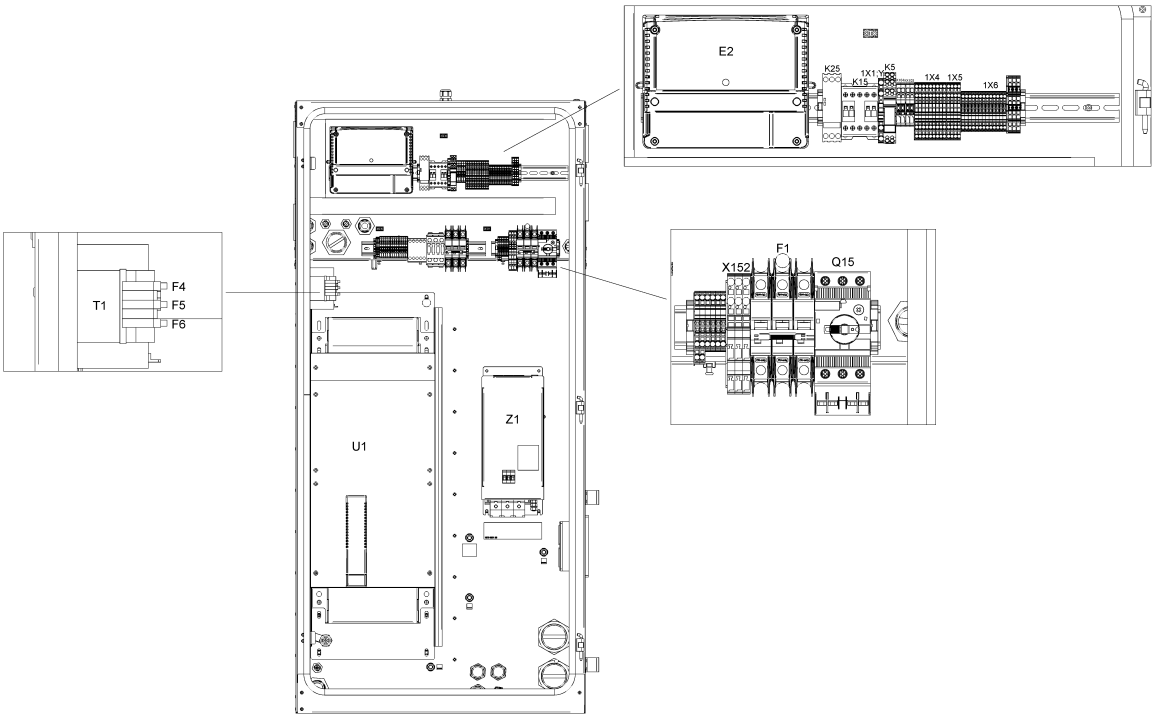
E2
K25
K15
1X1
K5
1X4
1X5
1X6
T1
F4
F5
F6
X152
F1
Q15
U1
Z1

Ref	Part Number	Qty	Name	Validity	EL
	1900 2203 02	1	DRYER RAIL	**(25/02/2019 - 16/12/2019)** (((CAPPRM:AS1210 , CAPPRM:CE , CAPPRM:MHLW , CAPPRM:MOM) + FREQ:50HZ + MOVOL:400V , (CAPPRM:ASME , CAPPRM:MHLW) + FREQ:60HZ + MOVOL:460V) + CAPPRE:IEC , CAPPRE:ULCUL + CAPPRM:ASME + FREQ:60HZ + MOVOL:460V) + COOL:WATER **(17/12/2019 - ...)** ((((CAPPRM:AS1210 , CAPPRM:CE , CAPPRM:MHLW , CAPPRM:MOM) + MOVOL:400V , (CAPPRM:CE + MOVOL:500V , CAPPRM:MHLW + MOVOL:200V) + COOL:AIR) + FREQ:50HZ , (CAPPRM:ASME , CAPPRM:MHLW) + FREQ:60HZ + MOVOL:460V) + CAPPRE:IEC , ((MOVOL:230V , MOVOL:575V) + COOL:AIR , MOVOL:460V) + CAPPRE:ULCUL + CAPPRM:ASME + FREQ:60HZ)	
	Electrical legend:	Without trafo on dryer			
	1088 0031 13	1	CONNECTOR 13-POLE	**(25/02/2019 - 16/12/2019)** (((CAPPRM:AS1210 , CAPPRM:CE , CAPPRM:MHLW , CAPPRM:MOM) + FREQ:50HZ + MOVOL:400V , (CAPPRM:ASME , CAPPRM:MHLW) + FREQ:60HZ + MOVOL:460V) + CAPPRE:IEC , CAPPRE:ULCUL + CAPPRM:ASME + FREQ:60HZ + MOVOL:460V) + COOL:WATER **(17/12/2019 - ...)** ((((CAPPRM:AS1210 , CAPPRM:CE , CAPPRM:MHLW , CAPPRM:MOM) + MOVOL:400V , (CAPPRM:CE + MOVOL:500V , CAPPRM:MHLW + MOVOL:200V) + COOL:AIR) + FREQ:50HZ , (CAPPRM:ASME , CAPPRM:MHLW) + FREQ:60HZ + MOVOL:460V) + CAPPRE:IEC , ((MOVOL:230V , MOVOL:575V) + COOL:AIR , MOVOL:460V) + CAPPRE:ULCUL + CAPPRM:ASME + FREQ:60HZ)	1X30
	1088 0037 82	1	CONNECTOR	**(25/02/2019 - 16/12/2019)** (((CAPPRM:AS1210 , CAPPRM:CE , CAPPRM:MHLW , CAPPRM:MOM) + FREQ:50HZ + MOVOL:400V , (CAPPRM:ASME , CAPPRM:MHLW) + FREQ:60HZ + MOVOL:460V) + CAPPRE:IEC , CAPPRE:ULCUL + CAPPRM:ASME + FREQ:60HZ + MOVOL:460V) + COOL:WATER **(17/12/2019 - ...)** ((((CAPPRM:AS1210 , CAPPRM:CE , CAPPRM:MHLW , CAPPRM:MOM) + MOVOL:400V , (CAPPRM:CE + MOVOL:500V , CAPPRM:MHLW + MOVOL:200V) + COOL:AIR) + FREQ:50HZ , (CAPPRM:ASME , CAPPRM:MHLW) + FREQ:60HZ + MOVOL:460V) + CAPPRE:IEC , ((MOVOL:230V , MOVOL:575V) + COOL:AIR , MOVOL:460V) + CAPPRE:ULCUL + CAPPRM:ASME + FREQ:60HZ)	3X34
	0697 9811 13	1	PLUG	**(25/02/2019 - 16/12/2019)** (((CAPPRM:AS1210 , CAPPRM:CE , CAPPRM:MHLW , CAPPRM:MOM) + FREQ:50HZ + MOVOL:400V , (CAPPRM:ASME , CAPPRM:MHLW) + FREQ:60HZ + MOVOL:460V) + CAPPRE:IEC , CAPPRE:ULCUL + CAPPRM:ASME + FREQ:60HZ + MOVOL:460V) + COOL:WATER **(17/12/2019 - ...)** ((((CAPPRM:AS1210 , CAPPRM:CE , CAPPRM:MHLW , CAPPRM:MOM) + MOVOL:400V , (CAPPRM:CE + MOVOL:500V , CAPPRM:MHLW + MOVOL:200V) + COOL:AIR) + FREQ:50HZ , (CAPPRM:ASME , CAPPRM:MHLW) + FREQ:60HZ + MOVOL:460V) + CAPPRE:IEC , ((MOVOL:230V , MOVOL:575V) + COOL:AIR , MOVOL:460V) + CAPPRE:ULCUL + CAPPRM:ASME + FREQ:60HZ)	
	Electrical legend:	Energy recovery			

Legend:

CAPPRE:IEC - Component approval electrical:IEC
CAPPRM:ASME - Component approval mechanical:ASME
CAPPRM:MOM - Component approval mechanical:MOM
FREQ:50HZ - Frequency:50 Hz
MODEL:GA90VP_16 - Model:GA 90VSD+
MOVOL:400V - Supply voltage:400 V
MOVOL:575V - Supply voltage:575 V
CAPPRE:ULCUL - Component approval electrical:UL/cUL
CAPPRM:CE - Component approval mechanical:CE
COOL:AIR - Cooling:Air cooled
FREQ:60HZ - Frequency:60 Hz
MOVOL:200V - Supply voltage:200 V
MOVOL:460V - Supply voltage:460 V
CAPPRM:AS1210 - Component approval mechanical:AS1210
CAPPRM:MHLW - Component approval mechanical:MHLW
COOL:WATER - Cooling:Water cooled
IDRY:Y - Integrated dryer:Yes
MOVOL:230V - Supply voltage:230 V
MOVOL:500V - Supply voltage:500 V

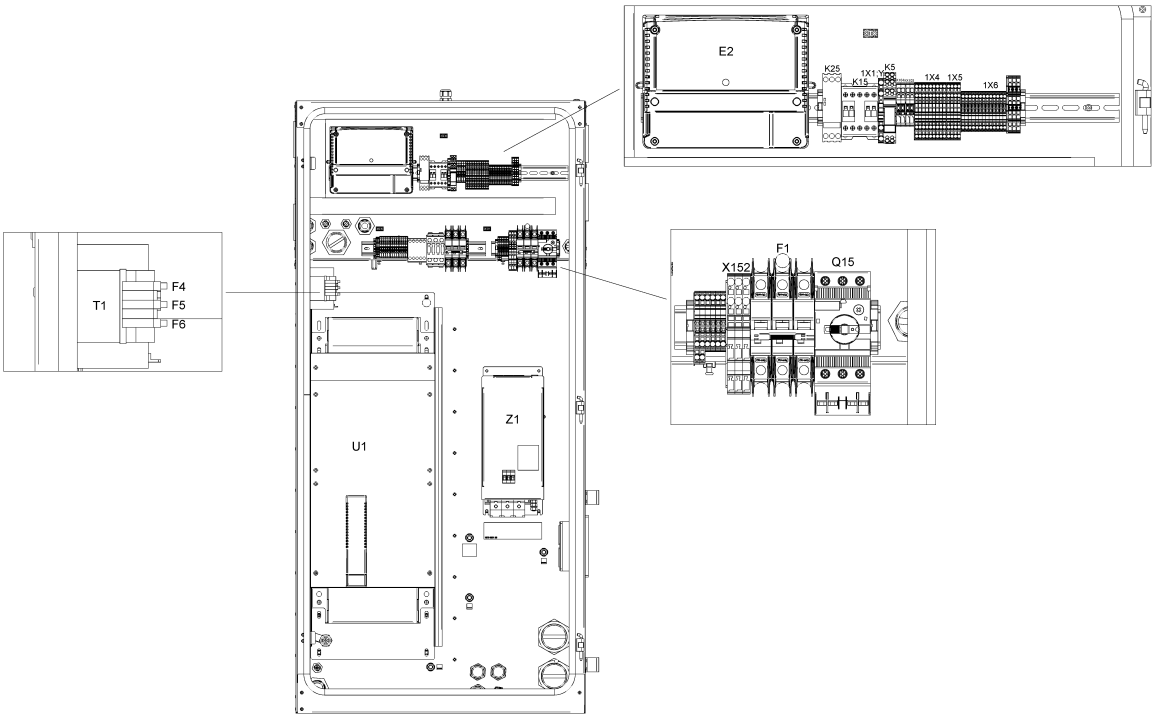
E2
K25
K15
1X1
K5
1X4
1X5
1X6
T1
F4
F5
F6
X152
F1
Q15
U1
Z1

Ref	Part Number	Qty	Name	Validity	EL
	0989 3700 44	1	LOCKNUT	**(25/02/2019 - 16/12/2019)** (((CAPPRM:AS1210 , CAPPRM:CE , CAPPRM:MHLW , CAPPRM:MOM) + FREQ:50HZ + MOVOL:400V , (CAPPRM:ASME , CAPPRM:MHLW) + FREQ:60HZ + MOVOL:460V) + CAPPRE:IEC , CAPPRE:ULCUL + CAPPRM:ASME + FREQ:60HZ + MOVOL:460V) + COOL:WATER **(17/12/2019 - ...)** ((((CAPPRM:AS1210 , CAPPRM:CE , CAPPRM:MHLW , CAPPRM:MOM) + MOVOL:400V , (CAPPRM:CE + MOVOL:500V , CAPPRM:MHLW + MOVOL:200V) + COOL:AIR) + FREQ:50HZ , (CAPPRM:ASME , CAPPRM:MHLW) + FREQ:60HZ + MOVOL:460V) + CAPPRE:IEC , ((MOVOL:230V , MOVOL:575V) + COOL:AIR , MOVOL:460V) + CAPPRE:ULCUL + CAPPRM:ASME + FREQ:60HZ)	
	Electrical legend:	Energy recovery			
	0697 9811 12	1	PLUG	**(25/02/2019 - 16/12/2019)** (((CAPPRM:AS1210 , CAPPRM:CE , CAPPRM:MHLW , CAPPRM:MOM) + FREQ:50HZ + MOVOL:400V , (CAPPRM:ASME , CAPPRM:MHLW) + FREQ:60HZ + MOVOL:460V) + CAPPRE:IEC , CAPPRE:ULCUL + CAPPRM:ASME + FREQ:60HZ + MOVOL:460V) + COOL:WATER **(17/12/2019 - ...)** ((((CAPPRM:AS1210 , CAPPRM:CE , CAPPRM:MHLW , CAPPRM:MOM) + MOVOL:400V , (CAPPRM:CE + MOVOL:500V , CAPPRM:MHLW + MOVOL:200V) + COOL:AIR) + FREQ:50HZ , (CAPPRM:ASME , CAPPRM:MHLW) + FREQ:60HZ + MOVOL:460V) + CAPPRE:IEC , ((MOVOL:230V , MOVOL:575V) + COOL:AIR , MOVOL:460V) + CAPPRE:ULCUL + CAPPRM:ASME + FREQ:60HZ)	
	Electrical legend:	Control circuit of T10			
	0989 3700 43	1	NUT	**(25/02/2019 - 16/12/2019)** (((CAPPRM:AS1210 , CAPPRM:CE , CAPPRM:MHLW , CAPPRM:MOM) + FREQ:50HZ + MOVOL:400V , (CAPPRM:ASME , CAPPRM:MHLW) + FREQ:60HZ + MOVOL:460V) + CAPPRE:IEC , CAPPRE:ULCUL + CAPPRM:ASME + FREQ:60HZ + MOVOL:460V) + COOL:WATER **(17/12/2019 - ...)** ((((CAPPRM:AS1210 , CAPPRM:CE , CAPPRM:MHLW , CAPPRM:MOM) + MOVOL:400V , (CAPPRM:CE + MOVOL:500V , CAPPRM:MHLW + MOVOL:200V) + COOL:AIR) + FREQ:50HZ , (CAPPRM:ASME , CAPPRM:MHLW) + FREQ:60HZ + MOVOL:460V) + CAPPRE:IEC , ((MOVOL:230V , MOVOL:575V) + COOL:AIR , MOVOL:460V) + CAPPRE:ULCUL + CAPPRM:ASME + FREQ:60HZ)	
	Electrical legend:	Control circuit of T10			
	0697 9811 10	1	PLUG	**(25/02/2019 - 16/12/2019)** (((CAPPRM:AS1210 , CAPPRM:CE , CAPPRM:MHLW , CAPPRM:MOM) + FREQ:50HZ + MOVOL:400V , (CAPPRM:ASME , CAPPRM:MHLW) + FREQ:60HZ + MOVOL:460V) + CAPPRE:IEC , CAPPRE:ULCUL + CAPPRM:ASME + FREQ:60HZ + MOVOL:460V) + COOL:WATER **(17/12/2019 - ...)** ((((CAPPRM:AS1210 , CAPPRM:CE , CAPPRM:MHLW , CAPPRM:MOM) + MOVOL:400V , (CAPPRM:CE + MOVOL:500V , CAPPRM:MHLW + MOVOL:200V) + COOL:AIR) + FREQ:50HZ , (CAPPRM:ASME , CAPPRM:MHLW) + FREQ:60HZ + MOVOL:460V) + CAPPRE:IEC , ((MOVOL:230V , MOVOL:575V) + COOL:AIR , MOVOL:460V) + CAPPRE:ULCUL + CAPPRM:ASME + FREQ:60HZ)	
	Electrical legend:	Plug for smartbox hole			

Legend:

CAPPRE:IEC - Component approval electrical:IEC
CAPPRM:ASME - Component approval mechanical:ASME
CAPPRM:MOM - Component approval mechanical:MOM
FREQ:50HZ - Frequency:50 Hz
MODEL:GA90VP_16 - Model:GA 90VSD+
MOVOL:400V - Supply voltage:400 V
MOVOL:575V - Supply voltage:575 V
CAPPRE:ULCUL - Component approval electrical:UL/cUL
CAPPRM:CE - Component approval mechanical:CE
COOL:AIR - Cooling:Air cooled
FREQ:60HZ - Frequency:60 Hz
MOVOL:200V - Supply voltage:200 V
MOVOL:460V - Supply voltage:460 V
CAPPRM:AS1210 - Component approval mechanical:AS1210
CAPPRM:MHLW - Component approval mechanical:MHLW
COOL:WATER - Cooling:Water cooled
IDRY:Y - Integrated dryer:Yes
MOVOL:230V - Supply voltage:230 V
MOVOL:500V - Supply voltage:500 V

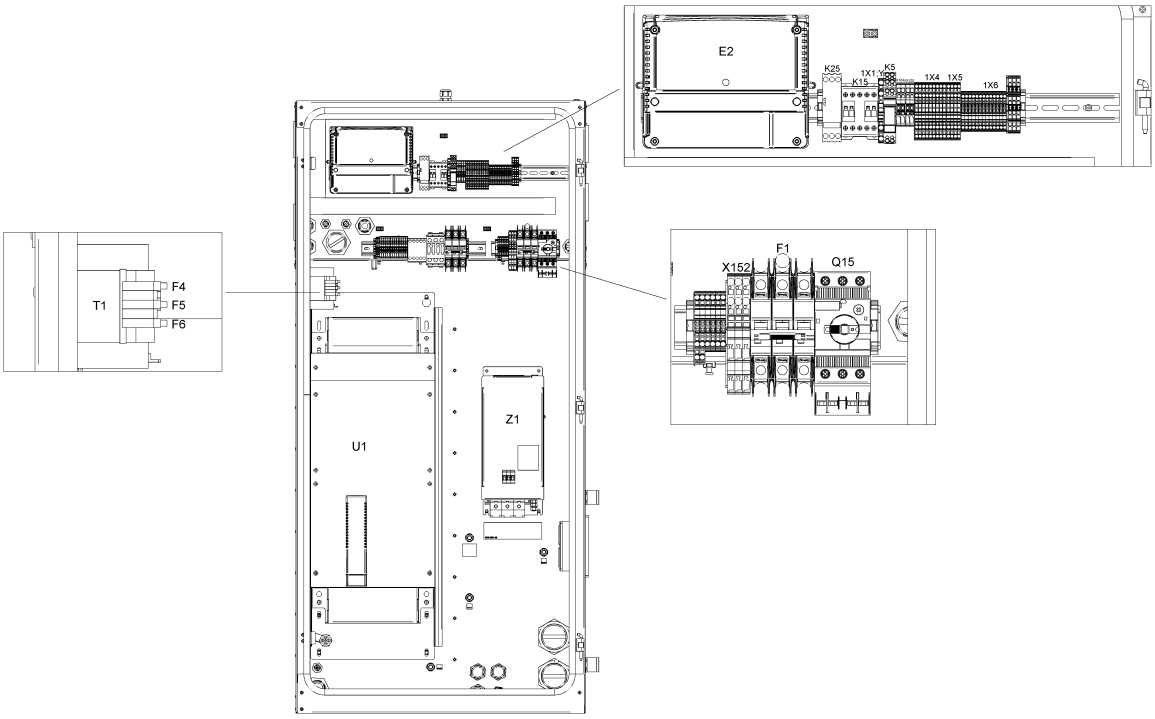
E2
K25
K15
1X1
K5
1X4
1X5
1X6
T1
F4
F5
F6
X152
F1
Q15
U1
Z1

21.19 - Cubicle components GA 90 VSD+ - (200V-400V-500V/50Hz, 460V/60Hz - IEC, 230V-460V-575V/60Hz - UL-cUL) - Full-Feature (17/12/2019 - ...)

(((MOVOL:200V , MOVOL:400V , MOVOL:500V) + FREQ:50HZ , FREQ:60HZ + MOVOL:460V) + CAPPRE:IEC , (MOVOL:230V , MOVOL:460V , MOVOL:575V) + CAPPRE:ULCUL + FREQ:60HZ) + IDRY:Y + MODEL:GA90VP_16

Ref	Part Number	Qty	Name	Validity	EL
	0989 3700 41	1	LOCKNUT	**(25/02/2019 - 16/12/2019)** (((CAPPRM:AS1210 , CAPPRM:CE , CAPPRM:MHLW , CAPPRM:MOM) + FREQ:50HZ + MOVOL:400V , (CAPPRM:ASME , CAPPRM:MHLW) + FREQ:60HZ + MOVOL:460V) + CAPPRE:IEC , CAPPRE:ULCUL + CAPPRM:ASME + FREQ:60HZ + MOVOL:460V) + COOL:WATER **(17/12/2019 - ...)** ((((CAPPRM:AS1210 , CAPPRM:CE , CAPPRM:MHLW , CAPPRM:MOM) + MOVOL:400V , (CAPPRM:CE + MOVOL:500V , CAPPRM:MHLW + MOVOL:200V) + COOL:AIR) + FREQ:50HZ , (CAPPRM:ASME , CAPPRM:MHLW) + FREQ:60HZ + MOVOL:460V) + CAPPRE:IEC , ((MOVOL:230V , MOVOL:575V) + COOL:AIR , MOVOL:460V) + CAPPRE:ULCUL + CAPPRM:ASME + FREQ:60HZ)	
	Electrical legend:	Nut for smartbox hole			
	1089 9556 37	1	AIR INLET WITH FILTER	**(25/02/2019 - 16/12/2019)** (((CAPPRM:AS1210 , CAPPRM:CE , CAPPRM:MHLW , CAPPRM:MOM) + FREQ:50HZ + MOVOL:400V , (CAPPRM:ASME , CAPPRM:MHLW) + FREQ:60HZ + MOVOL:460V) + CAPPRE:IEC , CAPPRE:ULCUL + CAPPRM:ASME + FREQ:60HZ + MOVOL:460V) + COOL:WATER **(17/12/2019 - ...)** ((((CAPPRM:AS1210 , CAPPRM:CE , CAPPRM:MHLW , CAPPRM:MOM) + MOVOL:400V , (CAPPRM:CE + MOVOL:500V , CAPPRM:MHLW + MOVOL:200V) + COOL:AIR) + FREQ:50HZ , (CAPPRM:ASME , CAPPRM:MHLW) + FREQ:60HZ + MOVOL:460V) + CAPPRE:IEC , ((MOVOL:230V , MOVOL:575V) + COOL:AIR , MOVOL:460V) + CAPPRE:ULCUL + CAPPRM:ASME + FREQ:60HZ)	Fan Filter

Legend:

CAPPRE:IEC - Component approval electrical:IEC
CAPPRE:ULCUL - Component approval electrical:UL/cUL
CAPPRM:AS1210 - Component approval mechanical:AS1210
CAPPRM:ASME - Component approval mechanical:ASME
CAPPRM:CE - Component approval mechanical:CE
CAPPRM:MHLW - Component approval mechanical:MHLW
CAPPRM:MOM - Component approval mechanical:MOM
COOL:AIR - Cooling:Air cooled
COOL:WATER - Cooling:Water cooled
FREQ:50HZ - Frequency:50 Hz
FREQ:60HZ - Frequency:60 Hz
IDRY:Y - Integrated dryer:Yes
MODEL:GA90VP_16 - Model:GA 90VSD+
MOVOL:200V - Supply voltage:200 V
MOVOL:230V - Supply voltage:230 V
MOVOL:400V - Supply voltage:400 V
MOVOL:460V - Supply voltage:460 V
MOVOL:500V - Supply voltage:500 V
MOVOL:575V - Supply voltage:575 V

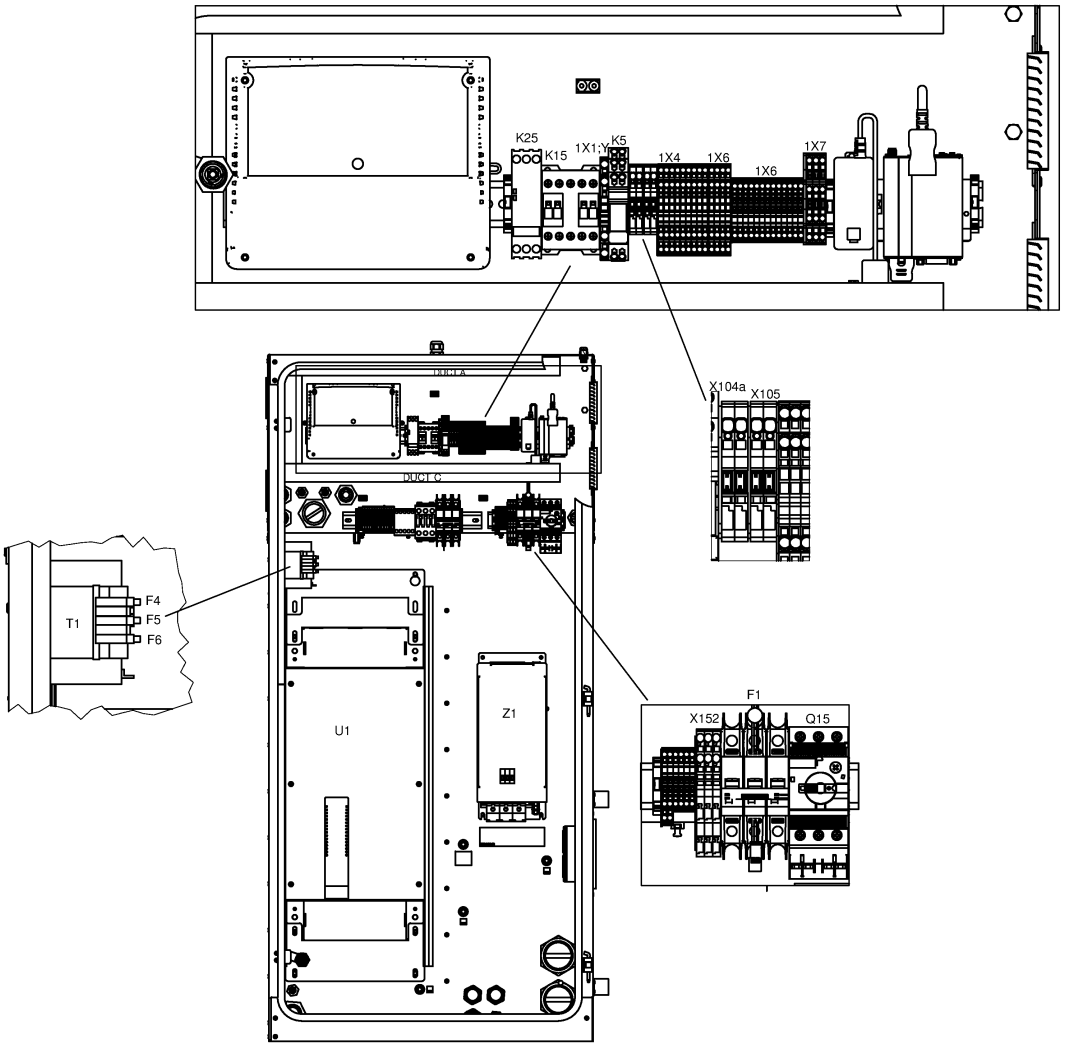
K25
K15
1X1:Y
K5
1X4
1X6
1X6
1X7
DUCT A
DUCT C
X104a
X105
T1
F4
F5
F6
U1
Z1
F1
X152
Q15

Ref	Part Number	Qty	Name	Validity	EL
	1900 2202 09	1	CUBICLE	**(20/07/2017 - 11/12/2018)**	
	9820 3000 21	1	CUBICLE LAYOUT	**(20/07/2017 - 20/08/2018)** (CAPPRM:ASME + MOVOL:380V , CAPPRM:MHLW + MOVOL:200V) + COOL:AIR **(21/08/2018 - 11/12/2018)** (CAPPRM:ASME + MOVOL:380V , CAPPRM:MHLW + COOL:AIR + MOVOL:200V)	-
	9820 3000 22	1	SERVICE DIAGRAM	**(20/07/2017 - 20/08/2018)** (CAPPRM:ASME + MOVOL:380V , CAPPRM:MHLW + MOVOL:200V) + COOL:AIR **(21/08/2018 - 11/12/2018)** (CAPPRM:ASME + MOVOL:380V , CAPPRM:MHLW + COOL:AIR + MOVOL:200V)	-
	1622 3798 70	1	WIRE HARNESS COMM CABLE	**(20/07/2017 - 20/08/2018)** (CAPPRM:ASME + MOVOL:380V , CAPPRM:MHLW + MOVOL:200V) + COOL:AIR **(21/08/2018 - 11/12/2018)** (CAPPRM:ASME + MOVOL:380V , CAPPRM:MHLW + COOL:AIR + MOVOL:200V)	-
	1622 5099 04	1	DI CHANE CABLE (1400MM)	**(20/07/2017 - 20/08/2018)** (CAPPRM:ASME + MOVOL:380V , CAPPRM:MHLW + MOVOL:200V) + COOL:AIR **(21/08/2018 - 11/12/2018)** (CAPPRM:ASME + MOVOL:380V , CAPPRM:MHLW + COOL:AIR + MOVOL:200V)	
	Electrical legend:	Comm Cable Loose supply			
	1649 8001 22	1	CUBICLE	**(20/07/2017 - 20/08/2018)** (CAPPRM:ASME + MOVOL:380V , CAPPRM:MHLW + MOVOL:200V) + COOL:AIR **(21/08/2018 - 11/12/2018)** (CAPPRM:ASME + MOVOL:380V , CAPPRM:MHLW + COOL:AIR + MOVOL:200V)	-
•	1202 6584 02	AR	SEAL		-
	1649 8001 32	1	PLATE NEOS "D"	**(20/07/2017 - 20/08/2018)** (CAPPRM:ASME + MOVOL:380V , CAPPRM:MHLW + MOVOL:200V) + COOL:AIR **(21/08/2018 - 11/12/2018)** (CAPPRM:ASME + MOVOL:380V , CAPPRM:MHLW + COOL:AIR + MOVOL:200V)	-
	1649 8003 85	1	MOUNTING PLATE	**(20/07/2017 - 20/08/2018)** (CAPPRM:ASME + MOVOL:380V , CAPPRM:MHLW + MOVOL:200V) + COOL:AIR **(21/08/2018 - 11/12/2018)** (CAPPRM:ASME + MOVOL:380V , CAPPRM:MHLW + COOL:AIR + MOVOL:200V)	-
	1649 8002 39	1	WIRE HARNESS	**(20/07/2017 - 20/08/2018)** (CAPPRM:ASME + MOVOL:380V , CAPPRM:MHLW + MOVOL:200V) + COOL:AIR **(21/08/2018 - 11/12/2018)** (CAPPRM:ASME + MOVOL:380V , CAPPRM:MHLW + COOL:AIR + MOVOL:200V)	
	Electrical legend:	Pressure switch (vessel) + pressure sensor vessel + pressure sensor outlet			
•	0698 5140 74	1	CABLE GLAND		
	1649 8002 40	1	WIRE HARNESS	**(20/07/2017 - 20/08/2018)** (CAPPRM:ASME + MOVOL:380V , CAPPRM:MHLW + MOVOL:200V) + COOL:AIR **(21/08/2018 - 11/12/2018)** (CAPPRM:ASME + MOVOL:380V , CAPPRM:MHLW + COOL:AIR + MOVOL:200V)	
	Electrical legend:	Temperature switch element outlet + solenoids + ambient sensor			
•	0698 5140 74	1	CABLE GLAND		
	1649 8002 72	1	CABLE POWER	**(20/07/2017 - 20/08/2018)** (CAPPRM:ASME + MOVOL:380V , CAPPRM:MHLW + MOVOL:200V) + COOL:AIR **(21/08/2018 - 11/12/2018)** (CAPPRM:ASME + MOVOL:380V , CAPPRM:MHLW + COOL:AIR + MOVOL:200V)	
	Electrical legend:	Full feature (FF) Drain			
	1649 8002 73	1	WIRE HARNESS	**(20/07/2017 - 20/08/2018)** (CAPPRM:ASME + MOVOL:380V , CAPPRM:MHLW + MOVOL:200V) + COOL:AIR **(21/08/2018 - 11/12/2018)** (CAPPRM:ASME + MOVOL:380V , CAPPRM:MHLW + COOL:AIR + MOVOL:200V)	

Legend:

CAPPRE:IEC - Component approval electrical:IEC
CAPPRM:ASME - Component approval mechanical:ASME
CAPPRM:MHLW - Component approval mechanical:MHLW
COOL:AIR - Cooling:Air cooled
FREQ:60HZ - Frequency:60 Hz
IDRY:Y - Integrated dryer:Yes
MODEL:GA90VP_16 - Model:GA 90VSD+
MOVOL:200V - Supply voltage:200 V
MOVOL:380V - Supply voltage:380 V

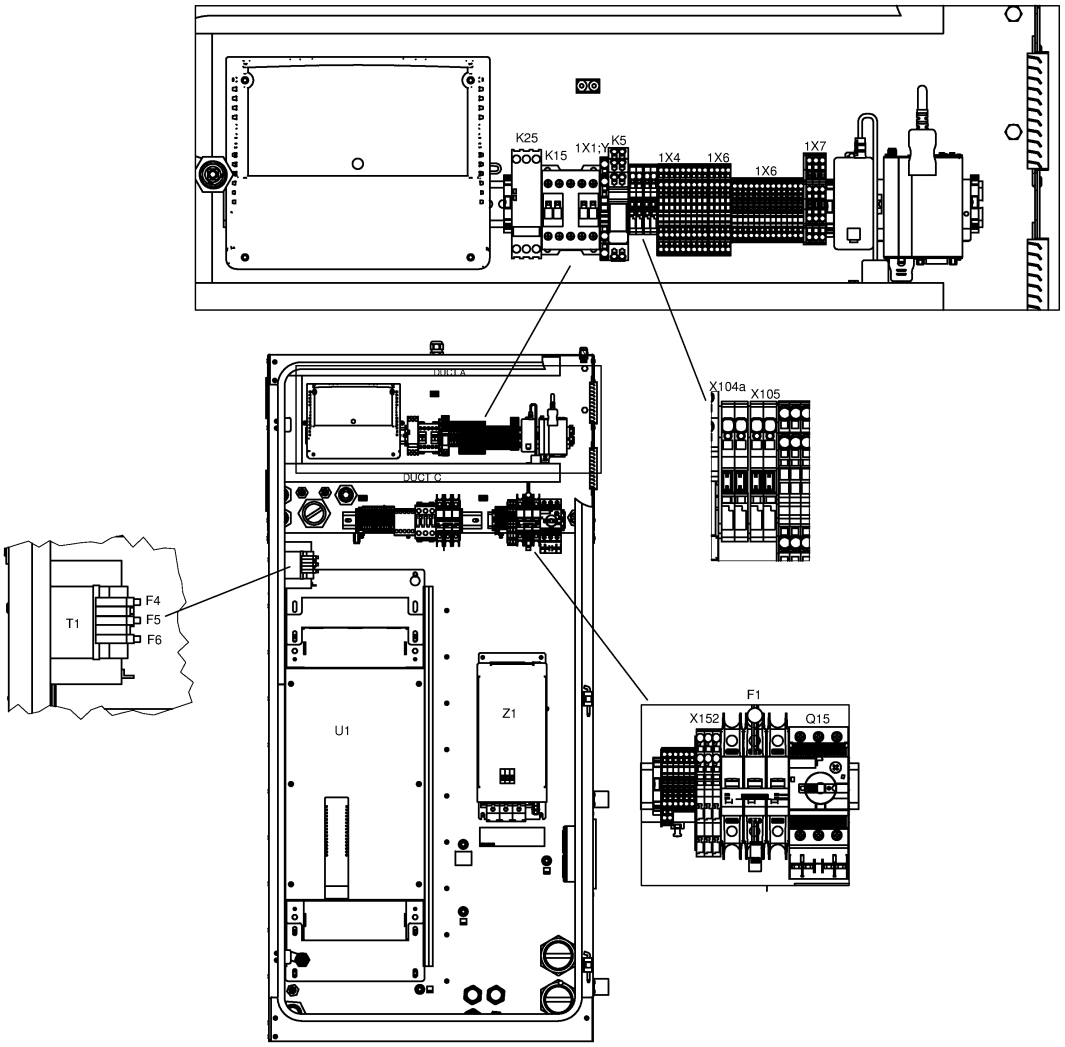
K25
K15
1X1:Y
K5
1X4
1X6
1X6
1X7
DUCT A
DUCT C
X104a
X105
T1
F4
F5
F6
U1
Z1
F1
X152
Q15

Ref	Part Number	Qty	Name	Validity	EL
	Electrical legend:	Pack Drain + Air filter switch			
	• 0698 5140 74	1	CABLE GLAND		
	1649 8002 75	1	WIRE HARNESS	**(20/07/2017 - 20/08/2018)** (CAPPRM:ASME + MOVOL:380V , CAPPRM:MHLW + MOVOL:200V) + COOL:AIR **(21/08/2018 - 11/12/2018)** (CAPPRM:ASME + MOVOL:380V , CAPPRM:MHLW + COOL:AIR + MOVOL:200V)	
	Electrical legend:	Relative Humidity sensor			
	• ~~1089 9320 09~~	1	RH SENSOR		
	Substituted by:	1089 9320 10 - TEMP. SENSOR (quantity: 1)			
	• 0698 5140 75	1	CABLE GLAND		
	1649 8001 44	3	MOTOR CABLE	**(20/07/2017 - 20/08/2018)** (CAPPRM:ASME + MOVOL:380V , CAPPRM:MHLW + MOVOL:200V) + COOL:AIR **(21/08/2018 - 11/12/2018)** (CAPPRM:ASME + MOVOL:380V , CAPPRM:MHLW + COOL:AIR + MOVOL:200V)	-
	1649 8001 47	1	MOTOR CABLE	**(20/07/2017 - 20/08/2018)** (CAPPRM:ASME + MOVOL:380V , CAPPRM:MHLW + MOVOL:200V) + COOL:AIR **(21/08/2018 - 11/12/2018)** (CAPPRM:ASME + MOVOL:380V , CAPPRM:MHLW + COOL:AIR + MOVOL:200V)	-
		1	DATA LABEL	**(02/02/2018 - 20/08/2018)** (CAPPRM:ASME + MOVOL:380V , CAPPRM:MHLW + MOVOL:200V) + COOL:AIR **(21/08/2018 - 11/12/2018)** (CAPPRM:ASME + MOVOL:380V , CAPPRM:MHLW + COOL:AIR + MOVOL:200V)	-
		1	DATA LABEL	**(20/07/2017 - 01/02/2018)** (CAPPRM:ASME + MOVOL:380V , CAPPRM:MHLW + MOVOL:200V) + COOL:AIR	-
	1079 9901 68	1	WARNING LABEL	**(20/07/2017 - 20/08/2018)** (CAPPRM:ASME + MOVOL:380V , CAPPRM:MHLW + MOVOL:200V) + COOL:AIR **(21/08/2018 - 11/12/2018)** (CAPPRM:ASME + MOVOL:380V , CAPPRM:MHLW + COOL:AIR + MOVOL:200V)	-
	1900 5350 14	1	INVERTER	**(20/07/2017 - 20/08/2018)** (CAPPRM:ASME + MOVOL:380V , CAPPRM:MHLW + MOVOL:200V) + COOL:AIR **(21/08/2018 - 11/12/2018)** (CAPPRM:ASME + MOVOL:380V , CAPPRM:MHLW + COOL:AIR + MOVOL:200V)	U1
	1631 2079 00	1	NANOPERMRING	**(20/07/2017 - 20/08/2018)** (CAPPRM:ASME + MOVOL:380V , CAPPRM:MHLW + MOVOL:200V) + COOL:AIR **(21/08/2018 - 11/12/2018)** (CAPPRM:ASME + MOVOL:380V , CAPPRM:MHLW + COOL:AIR + MOVOL:200V)	-
	0697 9811 17	2	PLUG	**(20/07/2017 - 20/08/2018)** (CAPPRM:ASME + MOVOL:380V , CAPPRM:MHLW + MOVOL:200V) + COOL:AIR **(21/08/2018 - 11/12/2018)** (CAPPRM:ASME + MOVOL:380V , CAPPRM:MHLW + COOL:AIR + MOVOL:200V)	
	Electrical legend:	Plug for transfo supply			
	0989 3700 48	2	NUT	**(20/07/2017 - 20/08/2018)** (CAPPRM:ASME + MOVOL:380V , CAPPRM:MHLW + MOVOL:200V) + COOL:AIR **(21/08/2018 - 11/12/2018)** (CAPPRM:ASME + MOVOL:380V , CAPPRM:MHLW + COOL:AIR + MOVOL:200V)	
	Electrical legend:	Nut for transfo supply			
	0698 5140 72	1	CABLE GLAND	**(20/07/2017 - 20/08/2018)** (CAPPRM:ASME + MOVOL:380V , CAPPRM:MHLW + MOVOL:200V) + COOL:AIR **(21/08/2018 - 11/12/2018)** (CAPPRM:ASME + MOVOL:380V , CAPPRM:MHLW + COOL:AIR + MOVOL:200V)	Fan

Legend:

CAPPRE:IEC - Component approval electrical:IEC
CAPPRM:ASME - Component approval mechanical:ASME
CAPPRM:MHLW - Component approval mechanical:MHLW
COOL:AIR - Cooling:Air cooled
FREQ:60HZ - Frequency:60 Hz
IDRY:Y - Integrated dryer:Yes
MODEL:GA90VP_16 - Model:GA 90VSD+
MOVOL:200V - Supply voltage:200 V
MOVOL:380V - Supply voltage:380 V

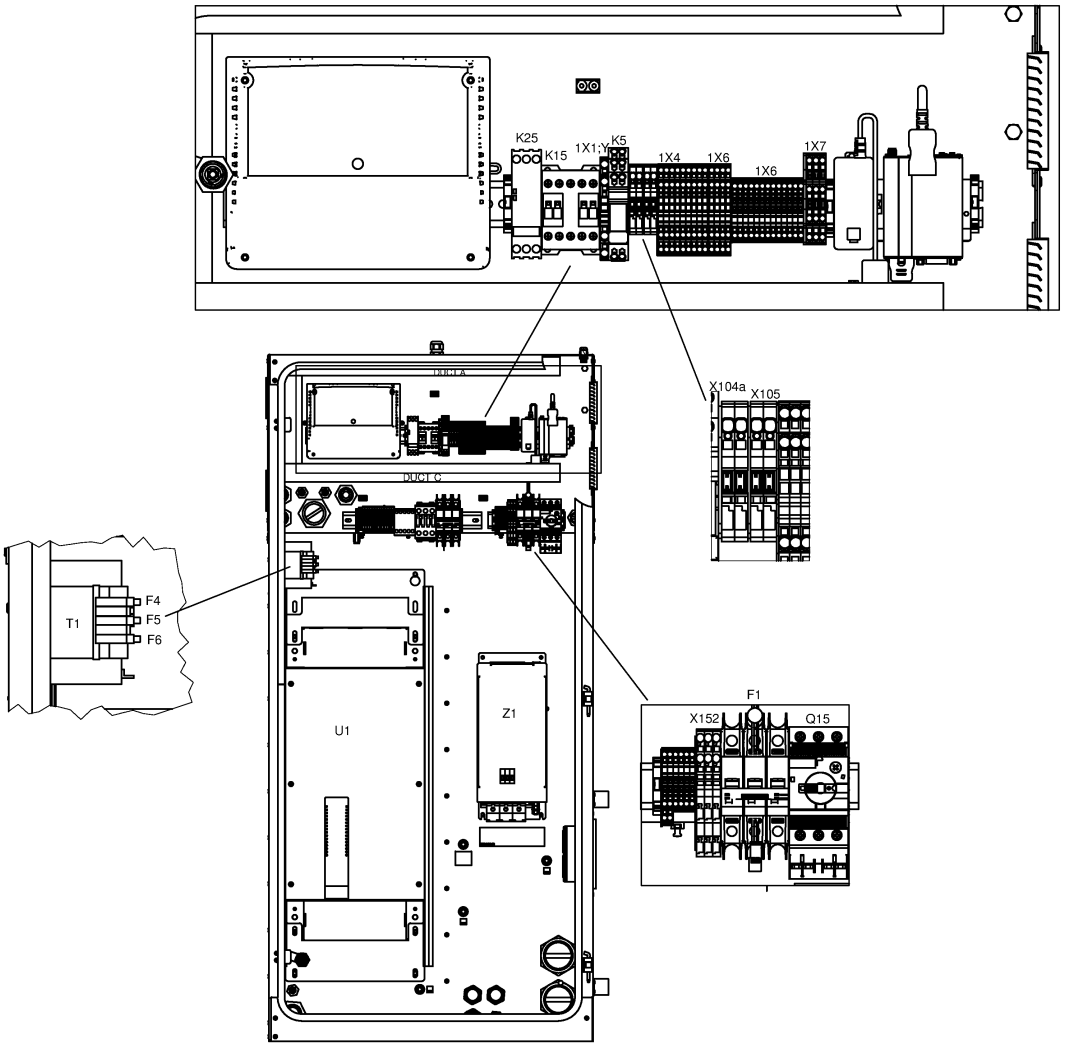
K25
K15
1X1:Y
K5
1X4
1X6
1X6
1X7
DUCT A
DUCT C
X104a
X105
T1
F4
F5
F6
U1
Z1
F1
X152
Q15

Ref	Part Number	Qty	Name	Validity	EL
	0698 5140 71	1	CABLE GLAND	**(20/07/2017 - 20/08/2018)** (CAPPRM:ASME + MOVOL:380V , CAPPRM:MHLW + MOVOL:200V) + COOL:AIR **(21/08/2018 - 11/12/2018)** (CAPPRM:ASME + MOVOL:380V , CAPPRM:MHLW + COOL:AIR + MOVOL:200V)	
	Electrical legend:	Ambient sensor			
	0697 9809 20	1	LOCKNUT	**(20/07/2017 - 20/08/2018)** (CAPPRM:ASME + MOVOL:380V , CAPPRM:MHLW + MOVOL:200V) + COOL:AIR **(21/08/2018 - 11/12/2018)** (CAPPRM:ASME + MOVOL:380V , CAPPRM:MHLW + COOL:AIR + MOVOL:200V)	
	Electrical legend:	Ambient sensor			
	1089 9556 44	1	FAN WITH FILTER	**(20/07/2017 - 20/08/2018)** (CAPPRM:ASME + MOVOL:380V , CAPPRM:MHLW + MOVOL:200V) + COOL:AIR **(21/08/2018 - 11/12/2018)** (CAPPRM:ASME + MOVOL:380V , CAPPRM:MHLW + COOL:AIR + MOVOL:200V)	Cubicle fan
		4	AIR INLET W/O FILTER	**(20/07/2017 - 20/08/2018)** (CAPPRM:ASME + MOVOL:380V , CAPPRM:MHLW + MOVOL:200V) + COOL:AIR **(21/08/2018 - 11/12/2018)** (CAPPRM:ASME + MOVOL:380V , CAPPRM:MHLW + COOL:AIR + MOVOL:200V)	-
	Service kits:	2901 9901 02 - PREVENTIVE MAINTENANCE KIT - GA 90 VSD+, GA 110 VSD+ 2901 9900 96 - AIR FILTER KIT - GA 90 VSD+, GA 110 VSD+			
	1088 0032 09	1	CONNECTOR	**(20/07/2017 - 20/08/2018)** (CAPPRM:ASME + MOVOL:380V , CAPPRM:MHLW + MOVOL:200V) + COOL:AIR **(21/08/2018 - 11/12/2018)** (CAPPRM:ASME + MOVOL:380V , CAPPRM:MHLW + COOL:AIR + MOVOL:200V)	X3
	1089 9572 06	1	LINE FILTER	**(20/07/2017 - 20/08/2018)** (CAPPRM:ASME + MOVOL:380V , CAPPRM:MHLW + MOVOL:200V) + COOL:AIR **(21/08/2018 - 11/12/2018)** (CAPPRM:ASME + MOVOL:380V , CAPPRM:MHLW + COOL:AIR + MOVOL:200V)	Z1 for 90kw
	1089 9562 04	1	STRAP	**(20/07/2017 - 20/08/2018)** (CAPPRM:ASME + MOVOL:380V , CAPPRM:MHLW + MOVOL:200V) + COOL:AIR **(21/08/2018 - 11/12/2018)** (CAPPRM:ASME + MOVOL:380V , CAPPRM:MHLW + COOL:AIR + MOVOL:200V)	HF-screen
	1089 9514 56	1	TRANSFORMER	**(20/07/2017 - 20/08/2018)** (CAPPRM:ASME + MOVOL:380V , CAPPRM:MHLW + MOVOL:200V) + COOL:AIR **(21/08/2018 - 11/12/2018)** (CAPPRM:ASME + MOVOL:380V , CAPPRM:MHLW + COOL:AIR + MOVOL:200V)	T1
	1089 9522 26	1	CIRCUIT BREAKER	**(20/07/2017 - 20/08/2018)** (CAPPRM:ASME + MOVOL:380V , CAPPRM:MHLW + MOVOL:200V) + COOL:AIR **(21/08/2018 - 11/12/2018)** (CAPPRM:ASME + MOVOL:380V , CAPPRM:MHLW + COOL:AIR + MOVOL:200V)	F1
	1089 9513 41	1	PUSH BUTTON	**(20/07/2017 - 20/08/2018)** (CAPPRM:ASME + MOVOL:380V , CAPPRM:MHLW + MOVOL:200V) + COOL:AIR **(21/08/2018 - 11/12/2018)** (CAPPRM:ASME + MOVOL:380V , CAPPRM:MHLW + COOL:AIR + MOVOL:200V)	S3
	1089 9513 28	1	HOLDER	**(20/07/2017 - 20/08/2018)** (CAPPRM:ASME + MOVOL:380V , CAPPRM:MHLW + MOVOL:200V) + COOL:AIR **(21/08/2018 - 11/12/2018)** (CAPPRM:ASME + MOVOL:380V , CAPPRM:MHLW + COOL:AIR + MOVOL:200V)	S3
	~~1089 9513 30~~	4	CONTACTOR	**(20/07/2017 - 20/08/2018)** (CAPPRM:ASME + MOVOL:380V , CAPPRM:MHLW + MOVOL:200V) + COOL:AIR **(21/08/2018 - 11/12/2018)** (CAPPRM:ASME + MOVOL:380V , CAPPRM:MHLW + COOL:AIR + MOVOL:200V)	S3

Legend:

CAPPRE:IEC - Component approval electrical:IEC
CAPPRM:ASME - Component approval mechanical:ASME
CAPPRM:MHLW - Component approval mechanical:MHLW
COOL:AIR - Cooling:Air cooled
FREQ:60HZ - Frequency:60 Hz
IDRY:Y - Integrated dryer:Yes
MODEL:GA90VP_16 - Model:GA 90VSD+
MOVOL:200V - Supply voltage:200 V
MOVOL:380V - Supply voltage:380 V

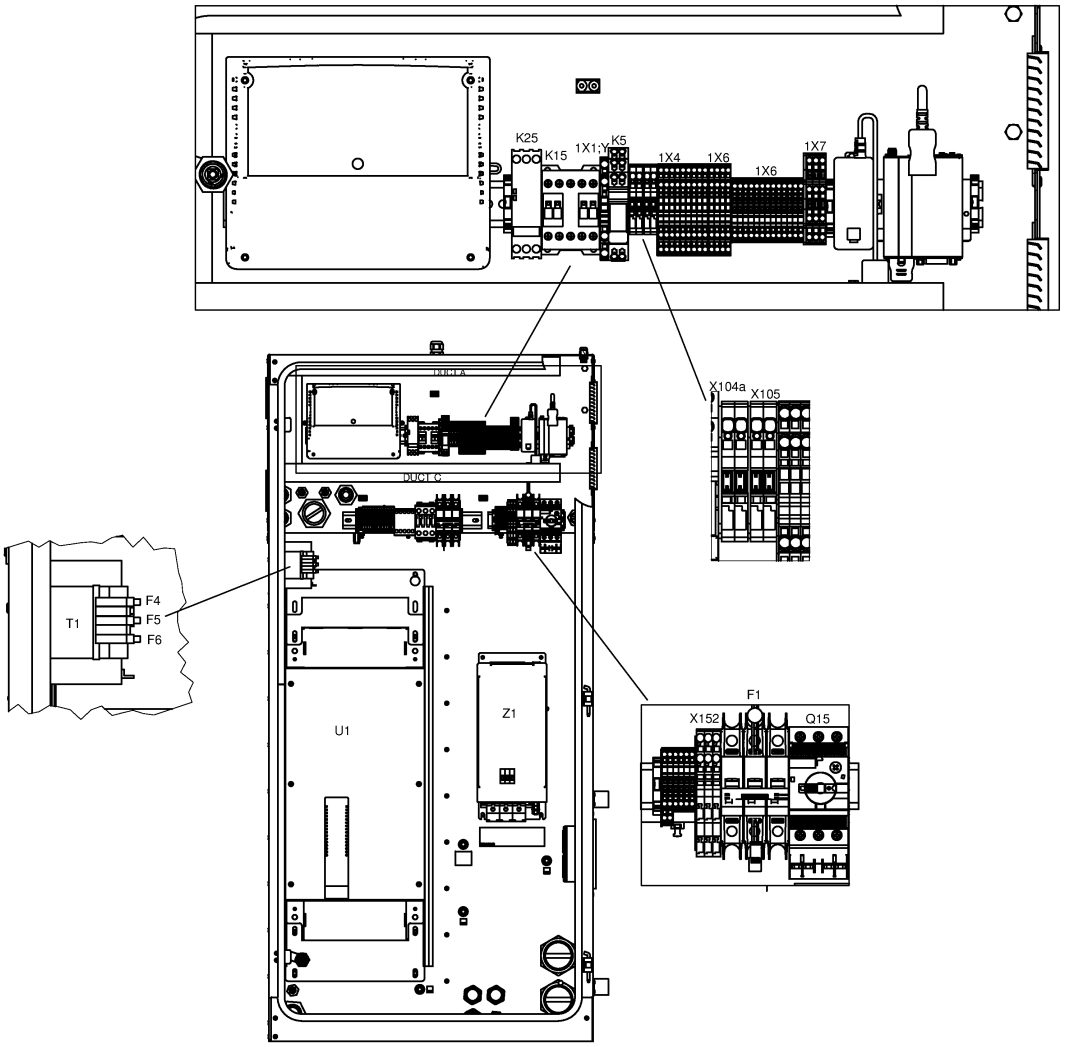
K25
K15
1X1:Y
K5
1X4
1X6
1X6
1X7
DUCT A
DUCT C
X104a
X105
T1
F4
F5
F6
U1
Z1
F1
X152
Q15

Ref	Part Number	Qty	Name	Validity	EL
	Substituted by:	1089 9513 04 - CONTACT BLOCK (quantity: 1)			
	1088 0031 02	1	CONNECTOR 2-POLE	**(20/07/2017 - 20/08/2018)** (CAPPRM:ASME + MOVOL:380V , CAPPRM:MHLW + MOVOL:200V) + COOL:AIR **(21/08/2018 - 11/12/2018)** (CAPPRM:ASME + MOVOL:380V , CAPPRM:MHLW + COOL:AIR + MOVOL:200V)	
	Electrical legend:	X153 (Smartbox)			
	1088 0039 07	3	TERMINAL	**(20/07/2017 - 20/08/2018)** (CAPPRM:ASME + MOVOL:380V , CAPPRM:MHLW + MOVOL:200V) + COOL:AIR **(21/08/2018 - 11/12/2018)** (CAPPRM:ASME + MOVOL:380V , CAPPRM:MHLW + COOL:AIR + MOVOL:200V)	X152
	1088 0039 05	1	PLATE	**(20/07/2017 - 20/08/2018)** (CAPPRM:ASME + MOVOL:380V , CAPPRM:MHLW + MOVOL:200V) + COOL:AIR **(21/08/2018 - 11/12/2018)** (CAPPRM:ASME + MOVOL:380V , CAPPRM:MHLW + COOL:AIR + MOVOL:200V)	X152
	1088 0039 26	1	CONNECTOR	**(20/07/2017 - 20/08/2018)** (CAPPRM:ASME + MOVOL:380V , CAPPRM:MHLW + MOVOL:200V) + COOL:AIR **(21/08/2018 - 11/12/2018)** (CAPPRM:ASME + MOVOL:380V , CAPPRM:MHLW + COOL:AIR + MOVOL:200V)	
	Electrical legend:	X152 (remove coding pin 1,3)			
	1088 0037 99	4	PIN	**(20/07/2017 - 20/08/2018)** (CAPPRM:ASME + MOVOL:380V , CAPPRM:MHLW + MOVOL:200V) + COOL:AIR **(21/08/2018 - 11/12/2018)** (CAPPRM:ASME + MOVOL:380V , CAPPRM:MHLW + COOL:AIR + MOVOL:200V)	X152:1; 3
	~~1088 0031 81~~	7	END STOP BRACKET 6MM	**(20/07/2017 - 20/08/2018)** (CAPPRM:ASME + MOVOL:380V , CAPPRM:MHLW + MOVOL:200V) + COOL:AIR **(21/08/2018 - 11/12/2018)** (CAPPRM:ASME + MOVOL:380V , CAPPRM:MHLW + COOL:AIR + MOVOL:200V)	
	Electrical legend:	Connector/terminal rail			
	Substituted by:	1089 0577 82 - END RETAINER (quantity: 1)			
	1088 0039 38	2	TERMINAL	**(20/07/2017 - 20/08/2018)** (CAPPRM:ASME + MOVOL:380V , CAPPRM:MHLW + MOVOL:200V) + COOL:AIR **(21/08/2018 - 11/12/2018)** (CAPPRM:ASME + MOVOL:380V , CAPPRM:MHLW + COOL:AIR + MOVOL:200V)	1X11:2,5
	1088 0039 40	1	PLATE	**(20/07/2017 - 20/08/2018)** (CAPPRM:ASME + MOVOL:380V , CAPPRM:MHLW + MOVOL:200V) + COOL:AIR **(21/08/2018 - 11/12/2018)** (CAPPRM:ASME + MOVOL:380V , CAPPRM:MHLW + COOL:AIR + MOVOL:200V)	1X11
	1088 0039 34	4	TERMINAL	**(20/07/2017 - 20/08/2018)** (CAPPRM:ASME + MOVOL:380V , CAPPRM:MHLW + MOVOL:200V) + COOL:AIR **(21/08/2018 - 11/12/2018)** (CAPPRM:ASME + MOVOL:380V , CAPPRM:MHLW + COOL:AIR + MOVOL:200V)	
	Electrical legend:	1X11:30,301,34			
	1088 0039 35	1	PLATE	**(20/07/2017 - 20/08/2018)** (CAPPRM:ASME + MOVOL:380V , CAPPRM:MHLW + MOVOL:200V) + COOL:AIR **(21/08/2018 - 11/12/2018)** (CAPPRM:ASME + MOVOL:380V , CAPPRM:MHLW + COOL:AIR + MOVOL:200V)	1X11
	1088 0039 04	2	TERMINAL	**(20/07/2017 - 20/08/2018)** (CAPPRM:ASME + MOVOL:380V , CAPPRM:MHLW + MOVOL:200V) + COOL:AIR **(21/08/2018 - 11/12/2018)** (CAPPRM:ASME + MOVOL:380V , CAPPRM:MHLW + COOL:AIR + MOVOL:200V)	X104a

Legend:

CAPPRE:IEC - Component approval electrical:IEC
CAPPRM:ASME - Component approval mechanical:ASME
CAPPRM:MHLW - Component approval mechanical:MHLW
COOL:AIR - Cooling:Air cooled
FREQ:60HZ - Frequency:60 Hz
IDRY:Y - Integrated dryer:Yes
MODEL:GA90VP_16 - Model:GA 90VSD+
MOVOL:200V - Supply voltage:200 V
MOVOL:380V - Supply voltage:380 V

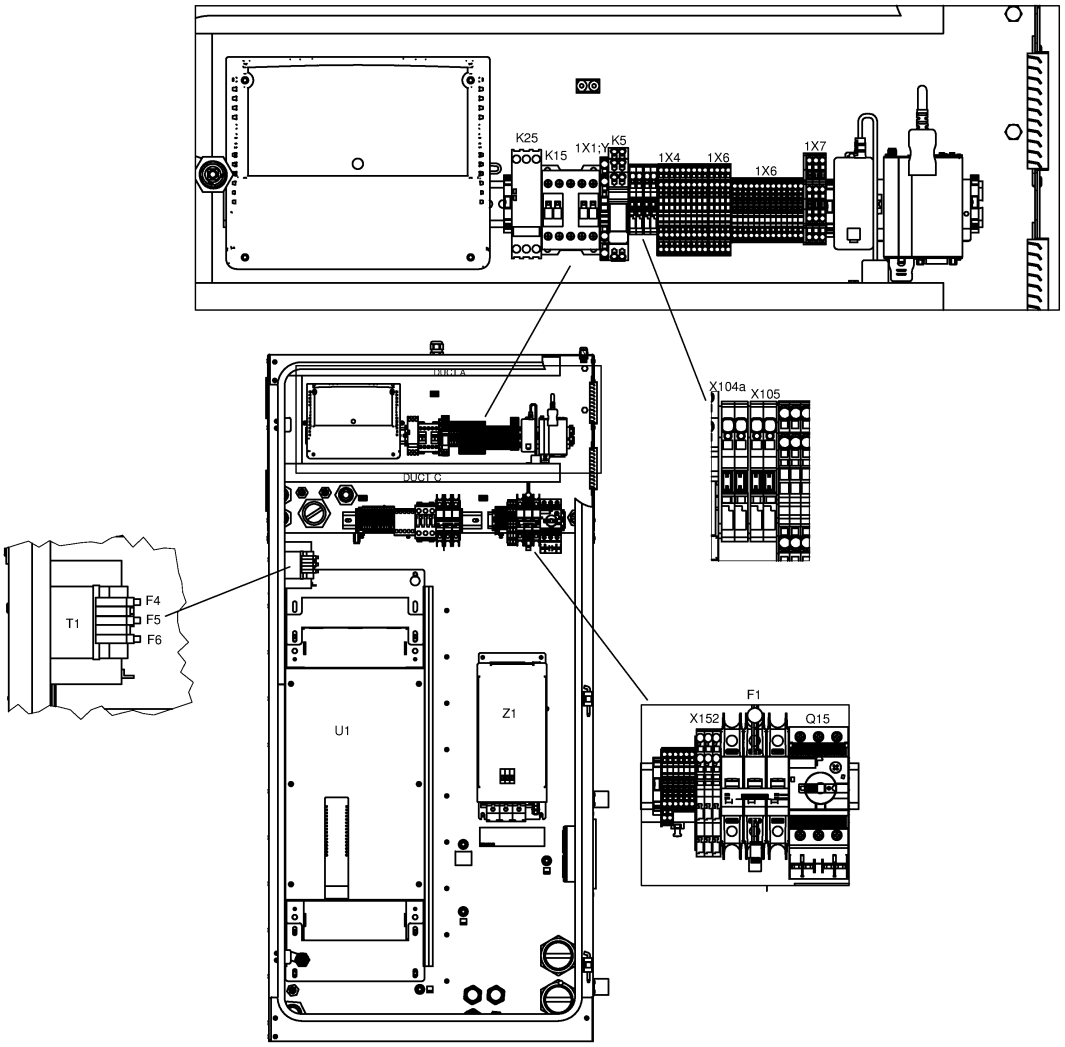
K25
K15
1X1:Y
K5
1X4
1X6
1X6
1X7
DUCT A
DUCT C
X104a
X105
T1
F4
F5
F6
U1
Z1
F1
X152
Q15

Ref	Part Number	Qty	Name	Validity	EL
	1088 0037 99	2	PIN	**(20/07/2017 - 20/08/2018)** (CAPPRM:ASME + MOVOL:380V , CAPPRM:MHLW + MOVOL:200V) + COOL:AIR **(21/08/2018 - 11/12/2018)** (CAPPRM:ASME + MOVOL:380V , CAPPRM:MHLW + COOL:AIR + MOVOL:200V)	X104a/X105
	1088 0039 02	1	PLATE	**(20/07/2017 - 20/08/2018)** (CAPPRM:ASME + MOVOL:380V , CAPPRM:MHLW + MOVOL:200V) + COOL:AIR **(21/08/2018 - 11/12/2018)** (CAPPRM:ASME + MOVOL:380V , CAPPRM:MHLW + COOL:AIR + MOVOL:200V)	X104a
	1088 0039 04	2	TERMINAL	**(20/07/2017 - 20/08/2018)** (CAPPRM:ASME + MOVOL:380V , CAPPRM:MHLW + MOVOL:200V) + COOL:AIR **(21/08/2018 - 11/12/2018)** (CAPPRM:ASME + MOVOL:380V , CAPPRM:MHLW + COOL:AIR + MOVOL:200V)	
	1088 0039 02	1	PLATE	**(20/07/2017 - 20/08/2018)** (CAPPRM:ASME + MOVOL:380V , CAPPRM:MHLW + MOVOL:200V) + COOL:AIR **(21/08/2018 - 11/12/2018)** (CAPPRM:ASME + MOVOL:380V , CAPPRM:MHLW + COOL:AIR + MOVOL:200V)	
	1088 0039 34	13	TERMINAL	**(20/07/2017 - 20/08/2018)** (CAPPRM:ASME + MOVOL:380V , CAPPRM:MHLW + MOVOL:200V) + COOL:AIR **(21/08/2018 - 11/12/2018)** (CAPPRM:ASME + MOVOL:380V , CAPPRM:MHLW + COOL:AIR + MOVOL:200V)	1X6
	1088 0037 69	3	CONNECTOR	**(20/07/2017 - 20/08/2018)** (CAPPRM:ASME + MOVOL:380V , CAPPRM:MHLW + MOVOL:200V) + COOL:AIR **(21/08/2018 - 11/12/2018)** (CAPPRM:ASME + MOVOL:380V , CAPPRM:MHLW + COOL:AIR + MOVOL:200V)	1X7
	1088 0039 35	1	PLATE	**(20/07/2017 - 20/08/2018)** (CAPPRM:ASME + MOVOL:380V , CAPPRM:MHLW + MOVOL:200V) + COOL:AIR **(21/08/2018 - 11/12/2018)** (CAPPRM:ASME + MOVOL:380V , CAPPRM:MHLW + COOL:AIR + MOVOL:200V)	1X6
	1088 0040 37	1	END PLATE	**(20/07/2017 - 20/08/2018)** (CAPPRM:ASME + MOVOL:380V , CAPPRM:MHLW + MOVOL:200V) + COOL:AIR **(21/08/2018 - 11/12/2018)** (CAPPRM:ASME + MOVOL:380V , CAPPRM:MHLW + COOL:AIR + MOVOL:200V)	1X7
	1088 0039 36	9	TERMINAL	**(20/07/2017 - 20/08/2018)** (CAPPRM:ASME + MOVOL:380V , CAPPRM:MHLW + MOVOL:200V) + COOL:AIR **(21/08/2018 - 11/12/2018)** (CAPPRM:ASME + MOVOL:380V , CAPPRM:MHLW + COOL:AIR + MOVOL:200V)	1X4
	1088 0039 36	4	TERMINAL	**(20/07/2017 - 20/08/2018)** (CAPPRM:ASME + MOVOL:380V , CAPPRM:MHLW + MOVOL:200V) + COOL:AIR **(21/08/2018 - 11/12/2018)** (CAPPRM:ASME + MOVOL:380V , CAPPRM:MHLW + COOL:AIR + MOVOL:200V)	1X6
	1088 0039 37	1	END PLATE	**(20/07/2017 - 20/08/2018)** (CAPPRM:ASME + MOVOL:380V , CAPPRM:MHLW + MOVOL:200V) + COOL:AIR **(21/08/2018 - 11/12/2018)** (CAPPRM:ASME + MOVOL:380V , CAPPRM:MHLW + COOL:AIR + MOVOL:200V)	1X4
	1088 0039 37	1	END PLATE	**(20/07/2017 - 20/08/2018)** (CAPPRM:ASME + MOVOL:380V , CAPPRM:MHLW + MOVOL:200V) + COOL:AIR **(21/08/2018 - 11/12/2018)** (CAPPRM:ASME + MOVOL:380V , CAPPRM:MHLW + COOL:AIR + MOVOL:200V)	1X6

Legend:

CAPPRE:IEC - Component approval electrical:IEC
CAPPRM:ASME - Component approval mechanical:ASME
CAPPRM:MHLW - Component approval mechanical:MHLW
COOL:AIR - Cooling:Air cooled
FREQ:60HZ - Frequency:60 Hz
IDRY:Y - Integrated dryer:Yes
MODEL:GA90VP_16 - Model:GA 90VSD+
MOVOL:200V - Supply voltage:200 V
MOVOL:380V - Supply voltage:380 V

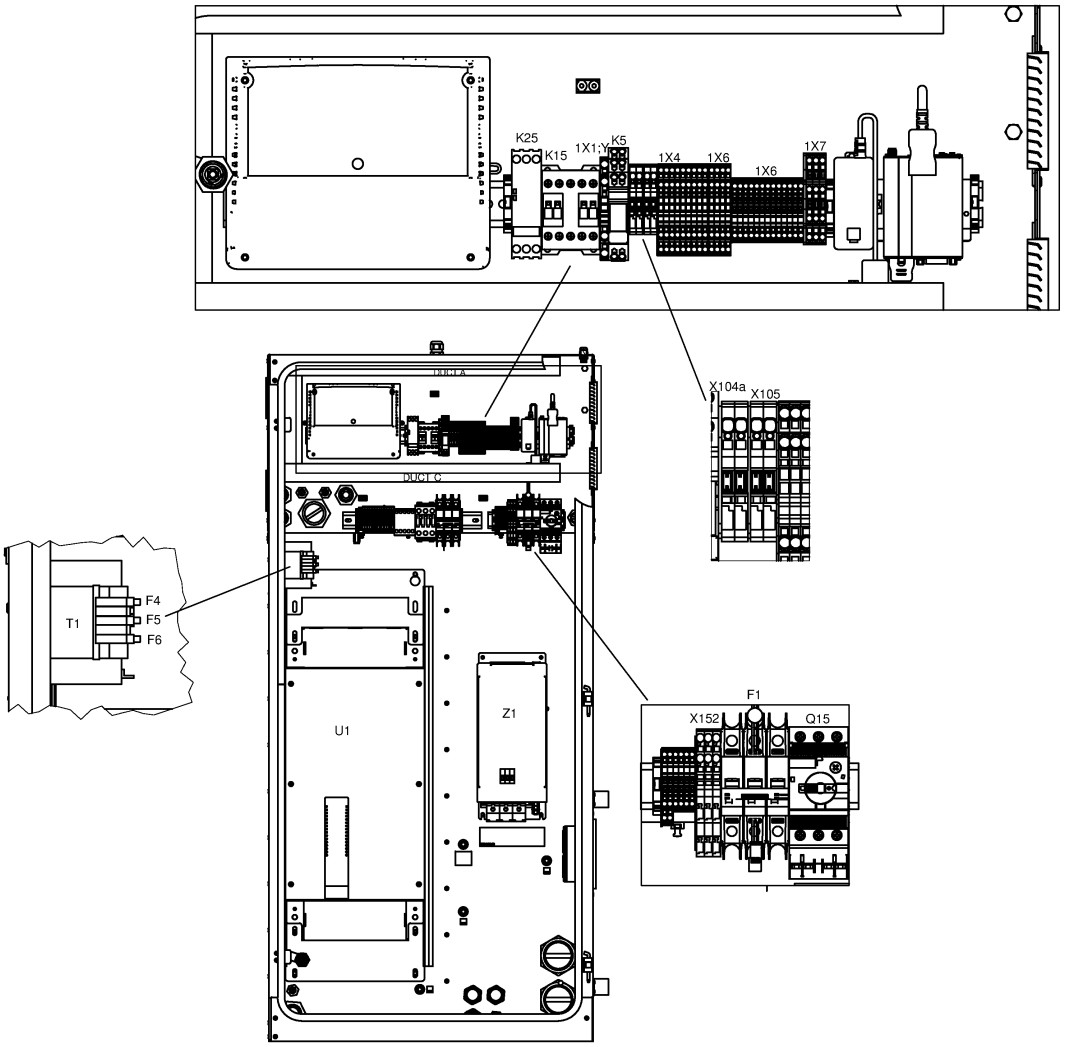
K25
K15
1X1:Y
K5
1X4
1X6
1X6
1X7
DUCT A
DUCT C
X104a
X105
T1
F4
F5
F6
U1
Z1
F1
X152
Q15

21.20 - Cubicle components GA 90 VSD+ - 200V-380V/60Hz - IEC - Full-Feature (20/07/2017 - 11/12/2018)

(MOVOL:200V , MOVOL:380V) + CAPPRE:IEC + FREQ:60HZ + IDRY:Y + MODEL:GA90VP_16

Ref	Part Number	Qty	Name	Validity	EL
	1088 0039 37	1	END PLATE	**(20/07/2017 - 20/08/2018)** (CAPPRM:ASME + MOVOL:380V , CAPPRM:MHLW + MOVOL:200V) + COOL:AIR **(21/08/2018 - 11/12/2018)** (CAPPRM:ASME + MOVOL:380V , CAPPRM:MHLW + COOL:AIR + MOVOL:200V)	1X1:Y/D
	1088 0037 81	1	CONNECTOR	**(20/07/2017 - 20/08/2018)** (CAPPRM:ASME + MOVOL:380V , CAPPRM:MHLW + MOVOL:200V) + COOL:AIR **(21/08/2018 - 11/12/2018)** (CAPPRM:ASME + MOVOL:380V , CAPPRM:MHLW + COOL:AIR + MOVOL:200V)	2X27
	1088 0037 80	1	CONNECTOR	**(20/07/2017 - 20/08/2018)** (CAPPRM:ASME + MOVOL:380V , CAPPRM:MHLW + MOVOL:200V) + COOL:AIR **(21/08/2018 - 11/12/2018)** (CAPPRM:ASME + MOVOL:380V , CAPPRM:MHLW + COOL:AIR + MOVOL:200V)	2X28
	1088 0031 32	1	CONNECTOR	**(20/07/2017 - 20/08/2018)** (CAPPRM:ASME + MOVOL:380V , CAPPRM:MHLW + MOVOL:200V) + COOL:AIR **(21/08/2018 - 11/12/2018)** (CAPPRM:ASME + MOVOL:380V , CAPPRM:MHLW + COOL:AIR + MOVOL:200V)	2X30
	1088 0031 26	1	CONNECTOR 6-POLE	**(20/07/2017 - 20/08/2018)** (CAPPRM:ASME + MOVOL:380V , CAPPRM:MHLW + MOVOL:200V) + COOL:AIR **(21/08/2018 - 11/12/2018)** (CAPPRM:ASME + MOVOL:380V , CAPPRM:MHLW + COOL:AIR + MOVOL:200V)	2X31
	~~1089 9664 06~~	1	SWITCH	**(20/07/2017 - 20/08/2018)** (CAPPRM:ASME + MOVOL:380V , CAPPRM:MHLW + MOVOL:200V) + COOL:AIR **(21/08/2018 - 11/12/2018)** (CAPPRM:ASME + MOVOL:380V , CAPPRM:MHLW + COOL:AIR + MOVOL:200V)	Q15
	Substituted by:	1089 9551 97 - AUX.CONTACT CIRCUIT BREAKER (quantity: 1)			
	1089 9551 18	1	CIRCUIT BREAKER	**(20/07/2017 - 20/08/2018)** (CAPPRM:ASME + MOVOL:380V , CAPPRM:MHLW + MOVOL:200V) + COOL:AIR **(21/08/2018 - 11/12/2018)** (CAPPRM:ASME + MOVOL:380V , CAPPRM:MHLW + COOL:AIR + MOVOL:200V)	Q15
	1088 0038 26	1	TERMINAL	**(20/07/2017 - 20/08/2018)** (CAPPRM:ASME + MOVOL:380V , CAPPRM:MHLW + MOVOL:200V) + COOL:AIR **(21/08/2018 - 11/12/2018)** (CAPPRM:ASME + MOVOL:380V , CAPPRM:MHLW + COOL:AIR + MOVOL:200V)	1X1:Y/D
	1089 9602 79	1	CONTACTOR 110 V	**(20/07/2017 - 20/08/2018)** (CAPPRM:ASME + MOVOL:380V , CAPPRM:MHLW + MOVOL:200V) + COOL:AIR **(21/08/2018 - 11/12/2018)** (CAPPRM:ASME + MOVOL:380V , CAPPRM:MHLW + COOL:AIR + MOVOL:200V)	K15
	1089 9461 26	1	PHASE SEQUENCE RELAY	**(20/07/2017 - 20/08/2018)** (CAPPRM:ASME + MOVOL:380V , CAPPRM:MHLW + MOVOL:200V) + COOL:AIR **(21/08/2018 - 11/12/2018)** (CAPPRM:ASME + MOVOL:380V , CAPPRM:MHLW + COOL:AIR + MOVOL:200V)	K25
	1088 0032 17	1	RELAY 115 VAC	**(20/07/2017 - 20/08/2018)** (CAPPRM:ASME + MOVOL:380V , CAPPRM:MHLW + MOVOL:200V) + COOL:AIR **(21/08/2018 - 11/12/2018)** (CAPPRM:ASME + MOVOL:380V , CAPPRM:MHLW + COOL:AIR + MOVOL:200V)	K5
	0991 8011 21	AR	CABLE TRAY	**(20/07/2017 - 20/08/2018)** (CAPPRM:ASME + MOVOL:380V , CAPPRM:MHLW + MOVOL:200V) + COOL:AIR **(21/08/2018 - 11/12/2018)** (CAPPRM:ASME + MOVOL:380V , CAPPRM:MHLW + COOL:AIR + MOVOL:200V)	L=1384mm

Legend:

CAPPRE:IEC - Component approval electrical:IEC
CAPPRM:ASME - Component approval mechanical:ASME
CAPPRM:MHLW - Component approval mechanical:MHLW
COOL:AIR - Cooling:Air cooled
FREQ:60HZ - Frequency:60 Hz
IDRY:Y - Integrated dryer:Yes
MODEL:GA90VP_16 - Model:GA 90VSD+
MOVOL:200V - Supply voltage:200 V
MOVOL:380V - Supply voltage:380 V

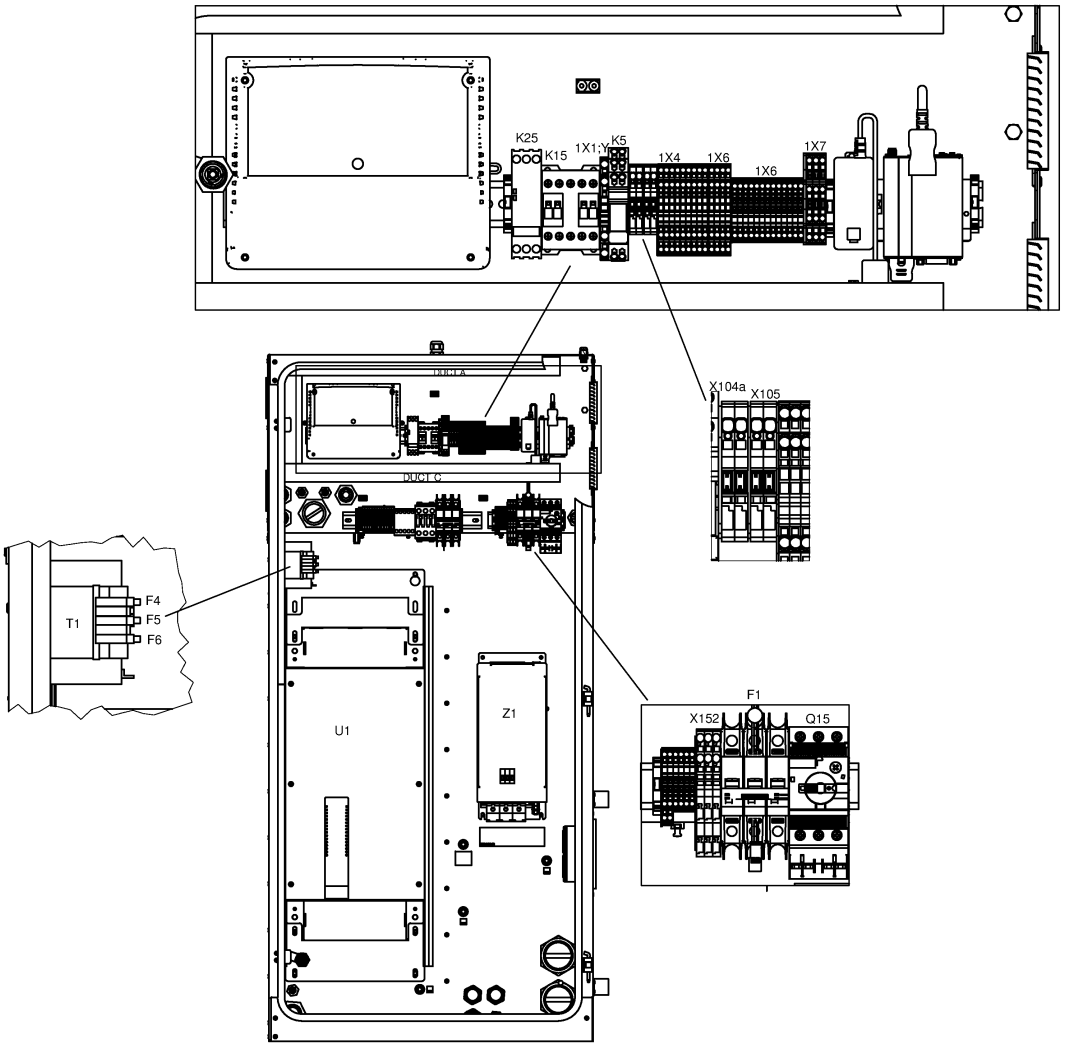
K25
K15
1X1:Y
K5
1X4
1X6
1X6
1X7
DUCT A
DUCT C
X104a
X105
T1
F4
F5
F6
U1
Z1
F1
X152
Q15

21.20 - Cubicle components GA 90 VSD+ - 200V-380V/60Hz - IEC - Full-Feature (20/07/2017 - 11/12/2018)

(MOVOL:200V , MOVOL:380V) + CAPPRE:IEC + FREQ:60HZ + IDRY:Y + MODEL:GA90VP_16

Ref	Part Number	Qty	Name	Validity	EL
	1900 2203 01	1	DRYER RAIL	**(20/07/2017 - 20/08/2018)** (CAPPRM:ASME + MOVOL:380V , CAPPRM:MHLW + MOVOL:200V) + COOL:AIR **(21/08/2018 - 11/12/2018)** (CAPPRM:ASME + MOVOL:380V , CAPPRM:MHLW + COOL:AIR + MOVOL:200V)	
	Electrical legend:	With trafo on dryer			
	1088 0031 13	1	CONNECTOR 13-POLE	**(20/07/2017 - 20/08/2018)** (CAPPRM:ASME + MOVOL:380V , CAPPRM:MHLW + MOVOL:200V) + COOL:AIR **(21/08/2018 - 11/12/2018)** (CAPPRM:ASME + MOVOL:380V , CAPPRM:MHLW + COOL:AIR + MOVOL:200V)	1X30
	1088 0037 82	1	CONNECTOR	**(20/07/2017 - 20/08/2018)** (CAPPRM:ASME + MOVOL:380V , CAPPRM:MHLW + MOVOL:200V) + COOL:AIR **(21/08/2018 - 11/12/2018)** (CAPPRM:ASME + MOVOL:380V , CAPPRM:MHLW + COOL:AIR + MOVOL:200V)	3X34
	0697 9811 13	1	PLUG	**(20/07/2017 - 20/08/2018)** (CAPPRM:ASME + MOVOL:380V , CAPPRM:MHLW + MOVOL:200V) + COOL:AIR **(21/08/2018 - 11/12/2018)** (CAPPRM:ASME + MOVOL:380V , CAPPRM:MHLW + COOL:AIR + MOVOL:200V)	
	Electrical legend:	Energy recovery			
	0989 3700 44	1	LOCKNUT	**(20/07/2017 - 20/08/2018)** (CAPPRM:ASME + MOVOL:380V , CAPPRM:MHLW + MOVOL:200V) + COOL:AIR **(21/08/2018 - 11/12/2018)** (CAPPRM:ASME + MOVOL:380V , CAPPRM:MHLW + COOL:AIR + MOVOL:200V)	
	Electrical legend:	Energy recovery			
	0697 9811 12	1	PLUG	**(20/07/2017 - 20/08/2018)** (CAPPRM:ASME + MOVOL:380V , CAPPRM:MHLW + MOVOL:200V) + COOL:AIR **(21/08/2018 - 11/12/2018)** (CAPPRM:ASME + MOVOL:380V , CAPPRM:MHLW + COOL:AIR + MOVOL:200V)	
	Electrical legend:	Control circuit of T10			
	0989 3700 43	1	NUT	**(20/07/2017 - 20/08/2018)** (CAPPRM:ASME + MOVOL:380V , CAPPRM:MHLW + MOVOL:200V) + COOL:AIR **(21/08/2018 - 11/12/2018)** (CAPPRM:ASME + MOVOL:380V , CAPPRM:MHLW + COOL:AIR + MOVOL:200V)	
	Electrical legend:	Control circuit of T10			

Legend:

CAPPRE:IEC - Component approval electrical:IEC
CAPPRM:ASME - Component approval mechanical:ASME
CAPPRM:MHLW - Component approval mechanical:MHLW
COOL:AIR - Cooling:Air cooled
FREQ:60HZ - Frequency:60 Hz
IDRY:Y - Integrated dryer:Yes
MODEL:GA90VP_16 - Model:GA 90VSD+
MOVOL:200V - Supply voltage:200 V
MOVOL:380V - Supply voltage:380 V

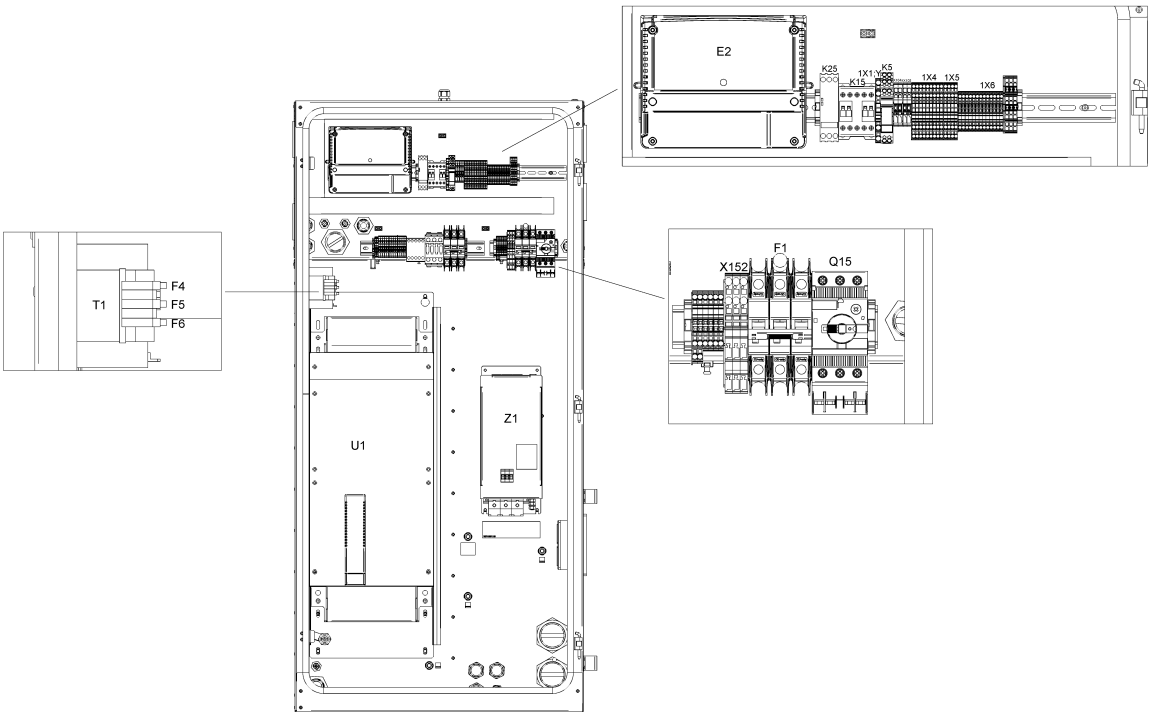
E2
K25
K15
1X1
K5
1X4
1X5
1X6
T1
F4
F5
F6
U1
Z1
X152
F1
Q15

21.21 - Cubicle components GA 90 VSD+ - 200V-380V/60Hz - IEC - Full-Feature (12/12/2018 - 16/12/2019)

(MOVOL:200V , MOVOL:380V) + CAPPRE:IEC + FREQ:60HZ + IDRY:Y + MODEL:GA90VP_16

Ref	Part Number	Qty	Name	Validity	EL
	1900 2202 28	1	CUBICLE	**(12/12/2018 - 16/12/2019)**	
	9820 3000 31	1	ASSEMBLY DRAWING	**(12/12/2018 - 24/02/2019)** (CAPPRM:ASME + MOVOL:380V , CAPPRM:MHLW + COOL:AIR + MOVOL:200V) **(25/02/2019 - 16/12/2019)** (CAPPRM:ASME + MOVOL:380V , CAPPRM:MHLW + MOVOL:200V) + COOL:AIR	AD
	9820 3000 27	1	SERVICE DIAGRAM	**(12/12/2018 - 24/02/2019)** (CAPPRM:ASME + MOVOL:380V , CAPPRM:MHLW + COOL:AIR + MOVOL:200V) **(25/02/2019 - 16/12/2019)** (CAPPRM:ASME + MOVOL:380V , CAPPRM:MHLW + MOVOL:200V) + COOL:AIR	SD
	1622 3798 72	1	WIRE HARNESS	**(12/12/2018 - 24/02/2019)** (CAPPRM:ASME + MOVOL:380V , CAPPRM:MHLW + COOL:AIR + MOVOL:200V) **(25/02/2019 - 16/12/2019)** (CAPPRM:ASME + MOVOL:380V , CAPPRM:MHLW + MOVOL:200V) + COOL:AIR	Comm Cable
	1622 5099 04	1	DI CHANE CABLE (1400MM)	**(12/12/2018 - 24/02/2019)** (CAPPRM:ASME + MOVOL:380V , CAPPRM:MHLW + COOL:AIR + MOVOL:200V) **(25/02/2019 - 16/12/2019)** (CAPPRM:ASME + MOVOL:380V , CAPPRM:MHLW + MOVOL:200V) + COOL:AIR	
	Electrical legend:	Comm Cable Loose supply			
	1649 8001 22	1	CUBICLE	**(12/12/2018 - 24/02/2019)** (CAPPRM:ASME + MOVOL:380V , CAPPRM:MHLW + COOL:AIR + MOVOL:200V) **(25/02/2019 - 16/12/2019)** (CAPPRM:ASME + MOVOL:380V , CAPPRM:MHLW + MOVOL:200V) + COOL:AIR	MSA
	• 1649 8001 23	1	CUBICLE		
	•• 1649 8001 24	1	BACK SUPPORT		
	•• 1649 8001 25	1	PANEL		
	•• 1649 8001 26	1	PANEL ASSEMBLY		
	•• 1649 8001 27	1	BRACKET ASSEMBLY		
	•• 0129 3270 40	80	RIVET		
	•• 1622 7876 00	15	TIE TA 1S8-M(PANDUIT)		
	•• 0129 3270 46	15	RIVET BLIND		
	•• 0694 5900 05	3	TAB		
	•• 0129 3270 40	6	RIVET		
	•• 1649 8001 92	2	BRACKET ASSEMBLY		
	•• 1649 8001 93	1	SUPPORT		
	•• 1622 3115 51	4	PE BOLT M10		
	•• 1649 8003 05	1	SUPPORT		
	•• 1649 8003 82	1	SUPPORT		
	• 1202 6584 02	1	SEAL		
	• 1649 8001 29	1	CUBICLE DOOR ASSY.		
	•• 1649 8001 30	1	CUBICLE DOOR		
	•• 1202 6400 00	3	HINGE		
	•• 1619 7705 00	2	LOCK		
	•• 1637 0000 72	1	DECAL BP		
	•• 1079 9931 46	1	DECAL WARNING		
	•• 1622 0000 20	1	DECAL SYMBOLS		
	•• 1079 9931 11	1	DECAL		
	• 1649 8002 36	2	INSULATION		
	• 1649 8002 38	1	INSULATION		
	• 1649 8003 79	1	PLATE		
	• 1202 6584 00	0.82	SEAL		

Legend:

CAPPRE:IEC - Component approval electrical:IEC
CAPPRM:ASME - Component approval mechanical:ASME
CAPPRM:MHLW - Component approval mechanical:MHLW
COOL:AIR - Cooling:Air cooled
FREQ:60HZ - Frequency:60 Hz
IDRY:Y - Integrated dryer:Yes
MODEL:GA90VP_16 - Model:GA 90VSD+
MOVOL:200V - Supply voltage:200 V
MOVOL:380V - Supply voltage:380 V

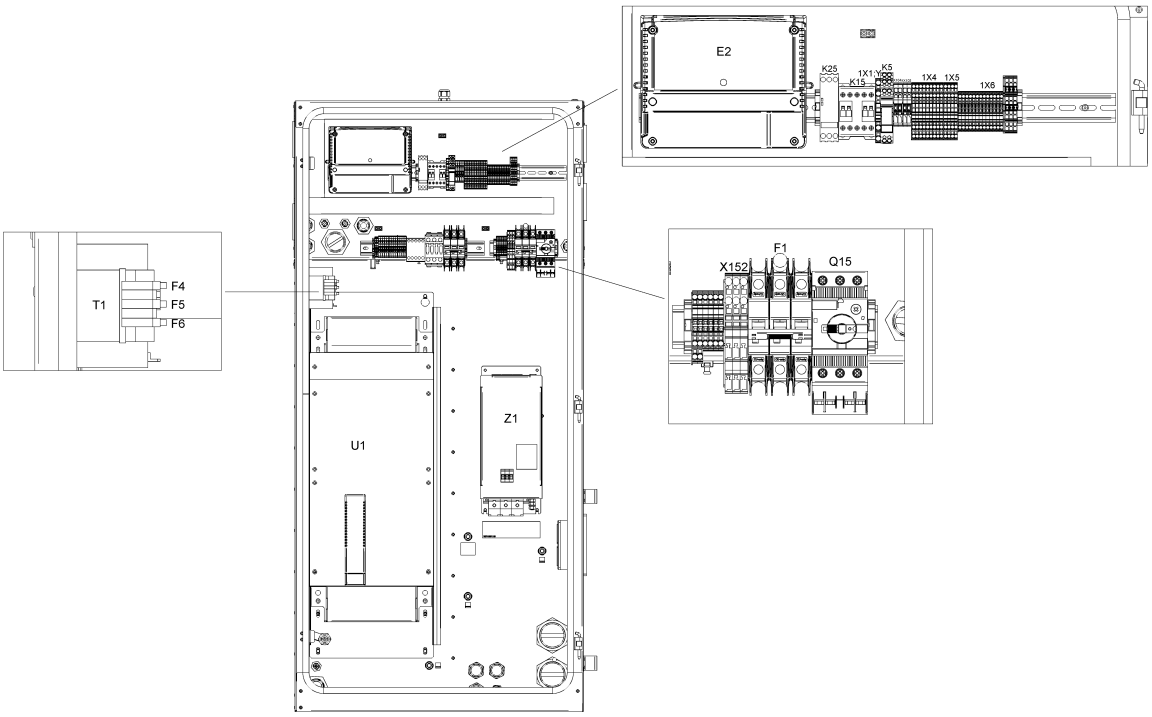
E2
K25
K15
1X1
K5
1X4
1X5
1X6
T1
F4
F5
F6
U1
Z1
F1
X152
Q15

Ref	Part Number	Qty	Name	Validity	EL
	1649 8001 32	1	PLATE NEOS "D"	**(12/12/2018 - 24/02/2019)** (CAPPRM:ASME + MOVOL:380V , CAPPRM:MHLW + COOL:AIR + MOVOL:200V) **(25/02/2019 - 16/12/2019)** (CAPPRM:ASME + MOVOL:380V , CAPPRM:MHLW + MOVOL:200V) + COOL:AIR	
	Electrical legend:	Mounting plate			
	1649 8003 85	1	MOUNTING PLATE	**(12/12/2018 - 24/02/2019)** (CAPPRM:ASME + MOVOL:380V , CAPPRM:MHLW + COOL:AIR + MOVOL:200V) **(25/02/2019 - 16/12/2019)** (CAPPRM:ASME + MOVOL:380V , CAPPRM:MHLW + MOVOL:200V) + COOL:AIR	
	Electrical legend:	Mounting plate			
	1649 8002 39	1	WIRE HARNESS	**(12/12/2018 - 24/02/2019)** (CAPPRM:ASME + MOVOL:380V , CAPPRM:MHLW + COOL:AIR + MOVOL:200V) **(25/02/2019 - 16/12/2019)** (CAPPRM:ASME + MOVOL:380V , CAPPRM:MHLW + MOVOL:200V) + COOL:AIR	WH
	1649 8002 40	1	WIRE HARNESS	**(12/12/2018 - 24/02/2019)** (CAPPRM:ASME + MOVOL:380V , CAPPRM:MHLW + COOL:AIR + MOVOL:200V) **(25/02/2019 - 16/12/2019)** (CAPPRM:ASME + MOVOL:380V , CAPPRM:MHLW + MOVOL:200V) + COOL:AIR	WH
	1649 8002 72	1	CABLE POWER	**(12/12/2018 - 24/02/2019)** (CAPPRM:ASME + MOVOL:380V , CAPPRM:MHLW + COOL:AIR + MOVOL:200V) **(25/02/2019 - 16/12/2019)** (CAPPRM:ASME + MOVOL:380V , CAPPRM:MHLW + MOVOL:200V) + COOL:AIR	
	Electrical legend:	Full feature (FF) Drain			
	1649 8002 73	1	WIRE HARNESS	**(12/12/2018 - 24/02/2019)** (CAPPRM:ASME + MOVOL:380V , CAPPRM:MHLW + COOL:AIR + MOVOL:200V) **(25/02/2019 - 16/12/2019)** (CAPPRM:ASME + MOVOL:380V , CAPPRM:MHLW + MOVOL:200V) + COOL:AIR	
	Electrical legend:	Pack Drain + Air filter switch			
	1649 8002 75	1	WIRE HARNESS	**(12/12/2018 - 24/02/2019)** (CAPPRM:ASME + MOVOL:380V , CAPPRM:MHLW + COOL:AIR + MOVOL:200V) **(25/02/2019 - 16/12/2019)** (CAPPRM:ASME + MOVOL:380V , CAPPRM:MHLW + MOVOL:200V) + COOL:AIR	
	Electrical legend:	Relative Humidity sensor			
	1649 8001 44	3	MOTOR CABLE	**(12/12/2018 - 24/02/2019)** (CAPPRM:ASME + MOVOL:380V , CAPPRM:MHLW + COOL:AIR + MOVOL:200V) **(25/02/2019 - 16/12/2019)** (CAPPRM:ASME + MOVOL:380V , CAPPRM:MHLW + MOVOL:200V) + COOL:AIR	
	Electrical legend:	Motor conduit			
	1649 8001 47	1	MOTOR CABLE	**(12/12/2018 - 24/02/2019)** (CAPPRM:ASME + MOVOL:380V , CAPPRM:MHLW + COOL:AIR + MOVOL:200V) **(25/02/2019 - 16/12/2019)** (CAPPRM:ASME + MOVOL:380V , CAPPRM:MHLW + MOVOL:200V) + COOL:AIR	
	Electrical legend:	Motor conduit			
		1	DATALABEL	**(12/12/2018 - 24/02/2019)** (CAPPRM:ASME + MOVOL:380V , CAPPRM:MHLW + COOL:AIR + MOVOL:200V) **(25/02/2019 - 16/12/2019)** (CAPPRM:ASME + MOVOL:380V , CAPPRM:MHLW + MOVOL:200V) + COOL:AIR	Label
	1079 9901 68	1	WARNING LABEL	**(12/12/2018 - 24/02/2019)** (CAPPRM:ASME + MOVOL:380V , CAPPRM:MHLW + COOL:AIR + MOVOL:200V) **(25/02/2019 - 16/12/2019)** (CAPPRM:ASME + MOVOL:380V , CAPPRM:MHLW + MOVOL:200V) + COOL:AIR	Label

Legend:

CAPPRE:IEC - Component approval electrical:IEC
CAPPRM:ASME - Component approval mechanical:ASME
CAPPRM:MHLW - Component approval mechanical:MHLW
COOL:AIR - Cooling:Air cooled
FREQ:60HZ - Frequency:60 Hz
IDRY:Y - Integrated dryer:Yes
MODEL:GA90VP_16 - Model:GA 90VSD+
MOVOL:200V - Supply voltage:200 V
MOVOL:380V - Supply voltage:380 V

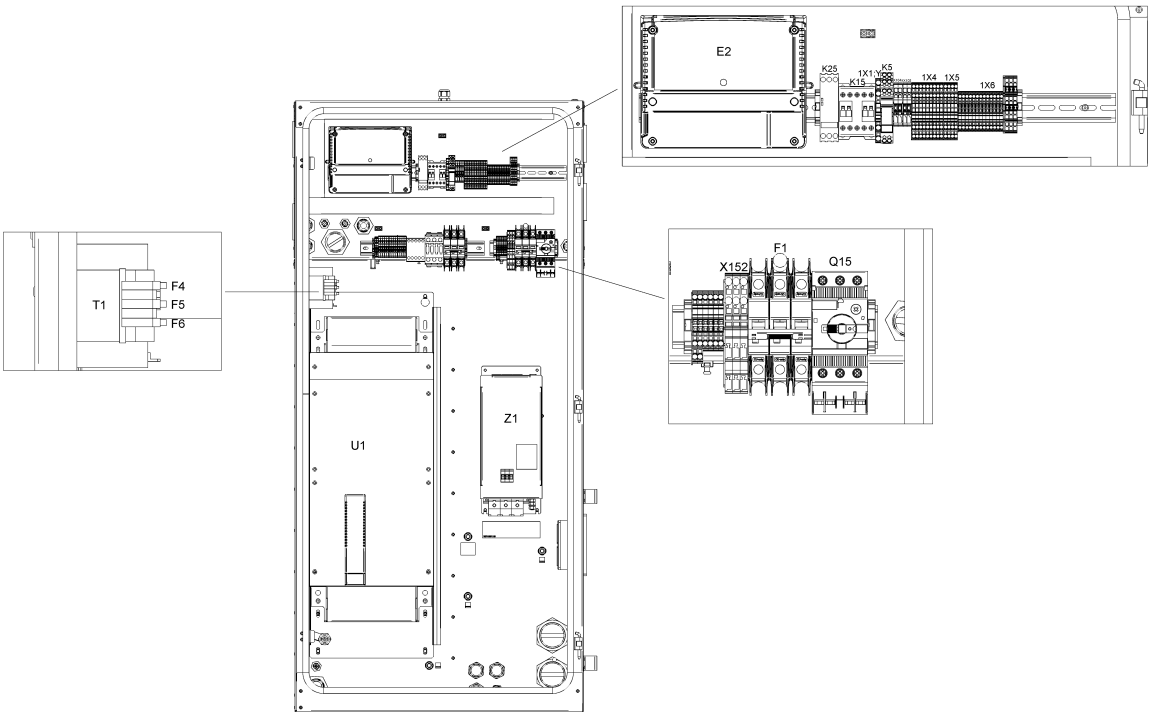
E2
K25
K15
1X1
K5
1X4
1X5
1X6
T1
F4
F5
F6
F1
X152
Q15
U1
Z1

Ref	Part Number	Qty	Name	Validity	EL
	1649 8005 00	-	LABEL	**(12/12/2018 - 24/02/2019)** (CAPPRM:ASME + MOVOL:380V , CAPPRM:MHLW + COOL:AIR + MOVOL:200V) **(25/02/2019 - 16/12/2019)** (CAPPRM:ASME + MOVOL:380V , CAPPRM:MHLW + MOVOL:200V) + COOL:AIR	Label
	1900 5350 14	1	INVERTER	**(12/12/2018 - 24/02/2019)** (CAPPRM:ASME + MOVOL:380V , CAPPRM:MHLW + COOL:AIR + MOVOL:200V) **(25/02/2019 - 16/12/2019)** (CAPPRM:ASME + MOVOL:380V , CAPPRM:MHLW + MOVOL:200V) + COOL:AIR	U1
	1631 2079 00	1	NANOPERMRING	**(12/12/2018 - 24/02/2019)** (CAPPRM:ASME + MOVOL:380V , CAPPRM:MHLW + COOL:AIR + MOVOL:200V) **(25/02/2019 - 16/12/2019)** (CAPPRM:ASME + MOVOL:380V , CAPPRM:MHLW + MOVOL:200V) + COOL:AIR	
	Electrical legend:	Nanoperm ring			
	0697 9811 17	2	PLUG	**(12/12/2018 - 24/02/2019)** (CAPPRM:ASME + MOVOL:380V , CAPPRM:MHLW + COOL:AIR + MOVOL:200V) **(25/02/2019 - 16/12/2019)** (CAPPRM:ASME + MOVOL:380V , CAPPRM:MHLW + MOVOL:200V) + COOL:AIR	
	Electrical legend:	Plug for transfo supply			
	0989 3700 48	2	NUT	**(12/12/2018 - 24/02/2019)** (CAPPRM:ASME + MOVOL:380V , CAPPRM:MHLW + COOL:AIR + MOVOL:200V) **(25/02/2019 - 16/12/2019)** (CAPPRM:ASME + MOVOL:380V , CAPPRM:MHLW + MOVOL:200V) + COOL:AIR	
	Electrical legend:	Nut for transfo supply			
	0698 5140 72	1	CABLE GLAND	**(12/12/2018 - 24/02/2019)** (CAPPRM:ASME + MOVOL:380V , CAPPRM:MHLW + COOL:AIR + MOVOL:200V) **(25/02/2019 - 16/12/2019)** (CAPPRM:ASME + MOVOL:380V , CAPPRM:MHLW + MOVOL:200V) + COOL:AIR	Fan
	0698 5140 71	1	CABLE GLAND	**(12/12/2018 - 24/02/2019)** (CAPPRM:ASME + MOVOL:380V , CAPPRM:MHLW + COOL:AIR + MOVOL:200V) **(25/02/2019 - 16/12/2019)** (CAPPRM:ASME + MOVOL:380V , CAPPRM:MHLW + MOVOL:200V) + COOL:AIR	
	Electrical legend:	Ambient sensor			
	0697 9809 20	1	LOCKNUT	**(12/12/2018 - 24/02/2019)** (CAPPRM:ASME + MOVOL:380V , CAPPRM:MHLW + COOL:AIR + MOVOL:200V) **(25/02/2019 - 16/12/2019)** (CAPPRM:ASME + MOVOL:380V , CAPPRM:MHLW + MOVOL:200V) + COOL:AIR	
	Electrical legend:	Ambient sensor			
	1089 9556 44	1	FAN WITH FILTER	**(12/12/2018 - 24/02/2019)** (CAPPRM:ASME + MOVOL:380V , CAPPRM:MHLW + COOL:AIR + MOVOL:200V) **(25/02/2019 - 16/12/2019)** (CAPPRM:ASME + MOVOL:380V , CAPPRM:MHLW + MOVOL:200V) + COOL:AIR	Cubicle fan
	1089 9556 72	4	AIR INLET WITHOUT FILTER	**(12/12/2018 - 24/02/2019)** (CAPPRM:ASME + MOVOL:380V , CAPPRM:MHLW + COOL:AIR + MOVOL:200V) **(25/02/2019 - 16/12/2019)** (CAPPRM:ASME + MOVOL:380V , CAPPRM:MHLW + MOVOL:200V) + COOL:AIR	Filter grid
	1088 0032 09	1	CONNECTOR	**(12/12/2018 - 24/02/2019)** (CAPPRM:ASME + MOVOL:380V , CAPPRM:MHLW + COOL:AIR + MOVOL:200V) **(25/02/2019 - 16/12/2019)** (CAPPRM:ASME + MOVOL:380V , CAPPRM:MHLW + MOVOL:200V) + COOL:AIR	X3

Legend:

CAPPRE:IEC - Component approval electrical:IEC
COOL:AIR - Cooling:Air cooled
MODEL:GA90VP_16 - Model:GA 90VSD+
CAPPRM:ASME - Component approval mechanical:ASME
FREQ:60HZ - Frequency:60 Hz
MOVOL:200V - Supply voltage:200 V
CAPPRM:MHLW - Component approval mechanical:MHLW
IDRY:Y - Integrated dryer:Yes
MOVOL:380V - Supply voltage:380 V

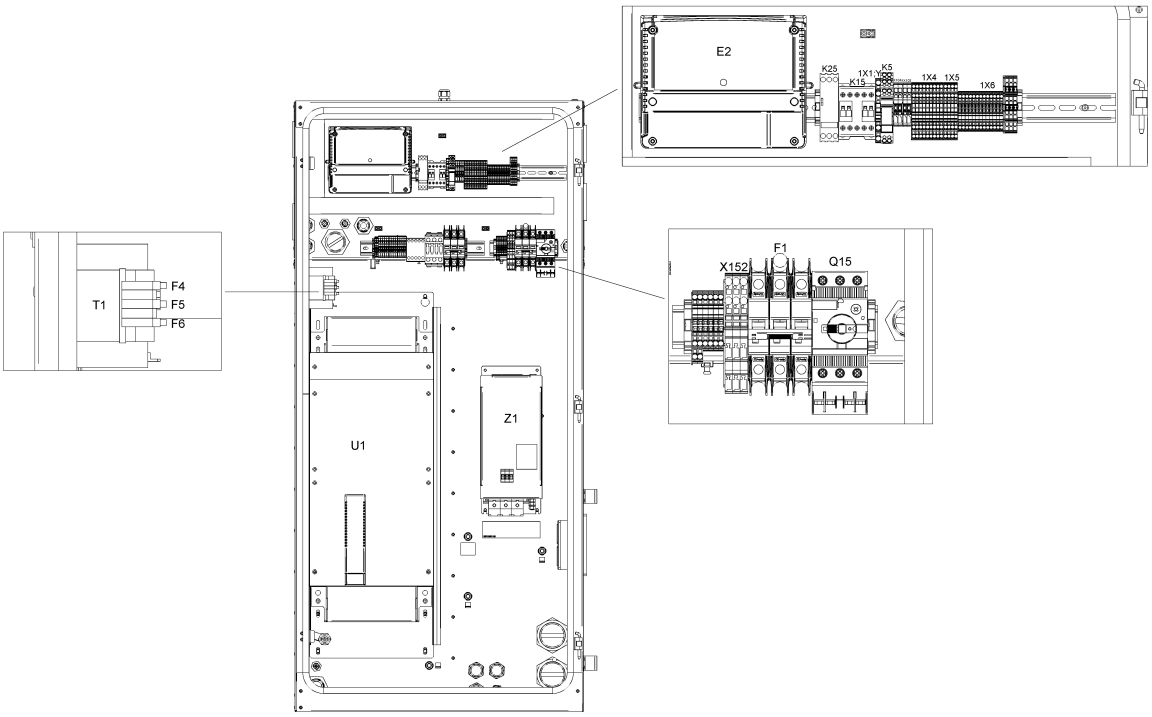
E2
K25
K15
1X1
K5
1X4
1X5
1X6
T1
F4
F5
F6
U1
Z1
F1
X152
Q15

21.21 - Cubicle components GA 90 VSD+ - 200V-380V/60Hz - IEC - Full-Feature (12/12/2018 - 16/12/2019)

(MOVOL:200V , MOVOL:380V) + CAPPRE:IEC + FREQ:60HZ + IDRY:Y + MODEL:GA90VP_16

Ref	Part Number	Qty	Name	Validity	EL
	1089 9572 06	1	LINE FILTER	**(12/12/2018 - 24/02/2019)** (CAPPRM:ASME + MOVOL:380V , CAPPRM:MHLW + COOL:AIR + MOVOL:200V) **(25/02/2019 - 16/12/2019)** (CAPPRM:ASME + MOVOL:380V , CAPPRM:MHLW + MOVOL:200V) + COOL:AIR	Z1 for 90kw
	1089 9562 04	1	STRAP	**(12/12/2018 - 24/02/2019)** (CAPPRM:ASME + MOVOL:380V , CAPPRM:MHLW + COOL:AIR + MOVOL:200V) **(25/02/2019 - 16/12/2019)** (CAPPRM:ASME + MOVOL:380V , CAPPRM:MHLW + MOVOL:200V) + COOL:AIR	HF-screen
	1089 9514 56	1	TRANSFORMER VOLTAGE	**(12/12/2018 - 24/02/2019)** (CAPPRM:ASME + MOVOL:380V , CAPPRM:MHLW + COOL:AIR + MOVOL:200V) **(25/02/2019 - 16/12/2019)** (CAPPRM:ASME + MOVOL:380V , CAPPRM:MHLW + MOVOL:200V) + COOL:AIR	T1
	1089 9522 26	1	CIRCUIT BREAKER	**(12/12/2018 - 24/02/2019)** (CAPPRM:ASME + MOVOL:380V , CAPPRM:MHLW + COOL:AIR + MOVOL:200V) **(25/02/2019 - 16/12/2019)** (CAPPRM:ASME + MOVOL:380V , CAPPRM:MHLW + MOVOL:200V) + COOL:AIR	F1
	1089 9513 41	1	PUSH BUTTON	**(12/12/2018 - 24/02/2019)** (CAPPRM:ASME + MOVOL:380V , CAPPRM:MHLW + COOL:AIR + MOVOL:200V) **(25/02/2019 - 16/12/2019)** (CAPPRM:ASME + MOVOL:380V , CAPPRM:MHLW + MOVOL:200V) + COOL:AIR	S3
	1089 9513 28	1	HOLDER	**(12/12/2018 - 24/02/2019)** (CAPPRM:ASME + MOVOL:380V , CAPPRM:MHLW + COOL:AIR + MOVOL:200V) **(25/02/2019 - 16/12/2019)** (CAPPRM:ASME + MOVOL:380V , CAPPRM:MHLW + MOVOL:200V) + COOL:AIR	S3
	~~1089 9513 30~~	4	CONTACTOR	**(12/12/2018 - 24/02/2019)** (CAPPRM:ASME + MOVOL:380V , CAPPRM:MHLW + COOL:AIR + MOVOL:200V) **(25/02/2019 - 16/12/2019)** (CAPPRM:ASME + MOVOL:380V , CAPPRM:MHLW + MOVOL:200V) + COOL:AIR	S3
	Substituted by:	1089 9513 04 - CONTACT BLOCK (quantity: 1)			
	1088 0031 02	1	CONNECTOR 2-POLE	**(12/12/2018 - 17/02/2019)** (CAPPRM:ASME + MOVOL:380V , CAPPRM:MHLW + COOL:AIR + MOVOL:200V)	
	1088 0039 07	3	TERMINAL	**(12/12/2018 - 24/02/2019)** (CAPPRM:ASME + MOVOL:380V , CAPPRM:MHLW + COOL:AIR + MOVOL:200V) **(25/02/2019 - 16/12/2019)** (CAPPRM:ASME + MOVOL:380V , CAPPRM:MHLW + MOVOL:200V) + COOL:AIR	X152
	1088 0039 05	1	PLATE	**(12/12/2018 - 24/02/2019)** (CAPPRM:ASME + MOVOL:380V , CAPPRM:MHLW + COOL:AIR + MOVOL:200V) **(25/02/2019 - 16/12/2019)** (CAPPRM:ASME + MOVOL:380V , CAPPRM:MHLW + MOVOL:200V) + COOL:AIR	X152
	1088 0039 26	1	CONNECTOR	**(12/12/2018 - 24/02/2019)** (CAPPRM:ASME + MOVOL:380V , CAPPRM:MHLW + COOL:AIR + MOVOL:200V) **(25/02/2019 - 16/12/2019)** (CAPPRM:ASME + MOVOL:380V , CAPPRM:MHLW + MOVOL:200V) + COOL:AIR	
	Electrical legend:	X152 (remove coding pin 1,3)			
	1088 0037 99	4	PIN	**(12/12/2018 - 24/02/2019)** (CAPPRM:ASME + MOVOL:380V , CAPPRM:MHLW + COOL:AIR + MOVOL:200V) **(25/02/2019 - 16/12/2019)** (CAPPRM:ASME + MOVOL:380V , CAPPRM:MHLW + MOVOL:200V) + COOL:AIR	X152:1; 3

Legend:

CAPPRE:IEC - Component approval electrical:IEC
CAPPRM:ASME - Component approval mechanical:ASME
CAPPRM:MHLW - Component approval mechanical:MHLW
COOL:AIR - Cooling:Air cooled
FREQ:60HZ - Frequency:60 Hz
IDRY:Y - Integrated dryer:Yes
MODEL:GA90VP_16 - Model:GA 90VSD+
MOVOL:200V - Supply voltage:200 V
MOVOL:380V - Supply voltage:380 V

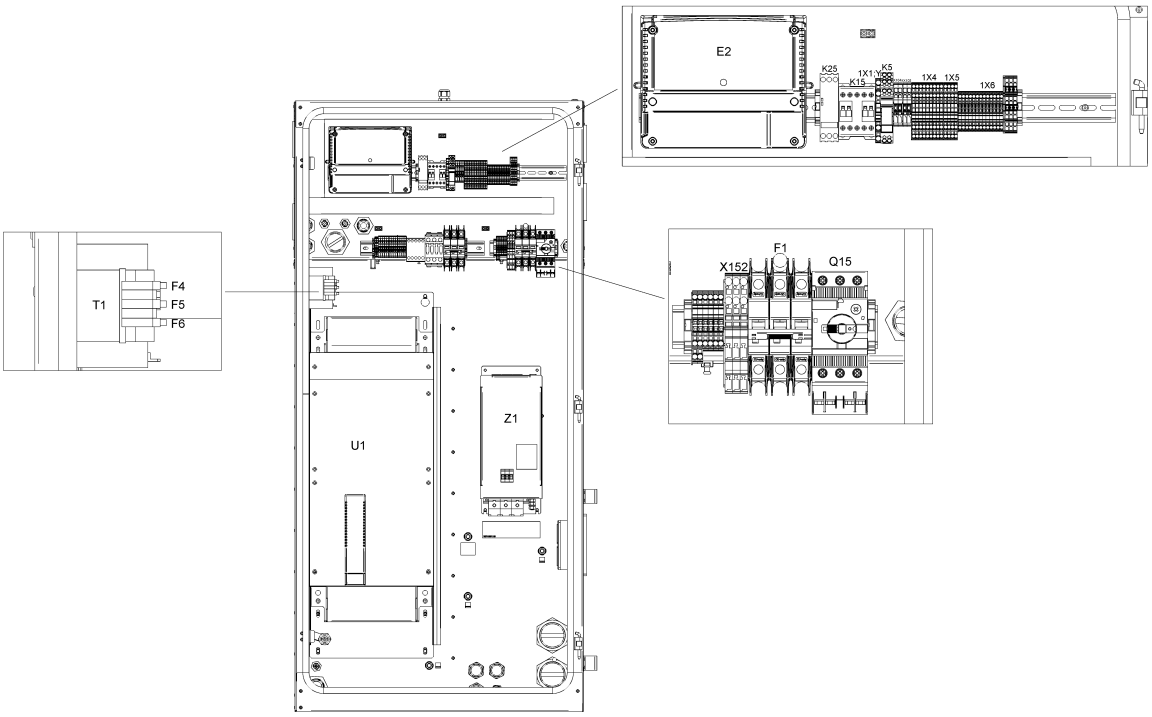
E2
K25
K15
1X1
K5
1X4
1X5
1X6
T1
F4
F5
F6
U1
Z1
F1
X152
Q15

Ref	Part Number	Qty	Name	Validity	EL
	~~1088 0031 81~~	7	END STOP BRACKET 6MM	**(12/12/2018 - 24/02/2019)** (CAPPRM:ASME + MOVOL:380V , CAPPRM:MHLW + COOL:AIR + MOVOL:200V) **(25/02/2019 - 16/12/2019)** (CAPPRM:ASME + MOVOL:380V , CAPPRM:MHLW + MOVOL:200V) + COOL:AIR	
	Electrical legend:	Connector/terminal rail			
	Substituted by:	1089 0577 82 - END RETAINER (quantity: 1)			
	1088 0039 38	2	TERMINAL	**(12/12/2018 - 24/02/2019)** (CAPPRM:ASME + MOVOL:380V , CAPPRM:MHLW + COOL:AIR + MOVOL:200V) **(25/02/2019 - 16/12/2019)** (CAPPRM:ASME + MOVOL:380V , CAPPRM:MHLW + MOVOL:200V) + COOL:AIR	1X11:2,5
	1088 0039 40	1	PLATE	**(12/12/2018 - 24/02/2019)** (CAPPRM:ASME + MOVOL:380V , CAPPRM:MHLW + COOL:AIR + MOVOL:200V) **(25/02/2019 - 16/12/2019)** (CAPPRM:ASME + MOVOL:380V , CAPPRM:MHLW + MOVOL:200V) + COOL:AIR	1X11
	1088 0039 34	4	TERMINAL	**(12/12/2018 - 24/02/2019)** (CAPPRM:ASME + MOVOL:380V , CAPPRM:MHLW + COOL:AIR + MOVOL:200V) **(25/02/2019 - 16/12/2019)** (CAPPRM:ASME + MOVOL:380V , CAPPRM:MHLW + MOVOL:200V) + COOL:AIR	
	Electrical legend:	1X11:30,301,34			
	1088 0039 35	1	PLATE	**(12/12/2018 - 24/02/2019)** (CAPPRM:ASME + MOVOL:380V , CAPPRM:MHLW + COOL:AIR + MOVOL:200V) **(25/02/2019 - 16/12/2019)** (CAPPRM:ASME + MOVOL:380V , CAPPRM:MHLW + MOVOL:200V) + COOL:AIR	1X11
	1088 0039 04	2	TERMINAL	**(12/12/2018 - 24/02/2019)** (CAPPRM:ASME + MOVOL:380V , CAPPRM:MHLW + COOL:AIR + MOVOL:200V) **(25/02/2019 - 16/12/2019)** (CAPPRM:ASME + MOVOL:380V , CAPPRM:MHLW + MOVOL:200V) + COOL:AIR	X104a
	1088 0037 99	2	PIN	**(12/12/2018 - 24/02/2019)** (CAPPRM:ASME + MOVOL:380V , CAPPRM:MHLW + COOL:AIR + MOVOL:200V) **(25/02/2019 - 16/12/2019)** (CAPPRM:ASME + MOVOL:380V , CAPPRM:MHLW + MOVOL:200V) + COOL:AIR	X104a/X105
	1088 0039 02	1	PLATE	**(12/12/2018 - 24/02/2019)** (CAPPRM:ASME + MOVOL:380V , CAPPRM:MHLW + COOL:AIR + MOVOL:200V) **(25/02/2019 - 16/12/2019)** (CAPPRM:ASME + MOVOL:380V , CAPPRM:MHLW + MOVOL:200V) + COOL:AIR	X104a
	1088 0039 07	2	TERMINAL	**(12/12/2018 - 24/02/2019)** (CAPPRM:ASME + MOVOL:380V , CAPPRM:MHLW + COOL:AIR + MOVOL:200V) **(25/02/2019 - 16/12/2019)** (CAPPRM:ASME + MOVOL:380V , CAPPRM:MHLW + MOVOL:200V) + COOL:AIR	X105
	1088 0039 05	1	PLATE	**(12/12/2018 - 24/02/2019)** (CAPPRM:ASME + MOVOL:380V , CAPPRM:MHLW + COOL:AIR + MOVOL:200V) **(25/02/2019 - 16/12/2019)** (CAPPRM:ASME + MOVOL:380V , CAPPRM:MHLW + MOVOL:200V) + COOL:AIR	X105
	1088 0039 34	13	TERMINAL	**(12/12/2018 - 24/02/2019)** (CAPPRM:ASME + MOVOL:380V , CAPPRM:MHLW + COOL:AIR + MOVOL:200V) **(25/02/2019 - 16/12/2019)** (CAPPRM:ASME + MOVOL:380V , CAPPRM:MHLW + MOVOL:200V) + COOL:AIR	1X6
	1088 0037 69	3	CONNECTOR	**(12/12/2018 - 24/02/2019)** (CAPPRM:ASME + MOVOL:380V , CAPPRM:MHLW + COOL:AIR + MOVOL:200V) **(25/02/2019 - 16/12/2019)** (CAPPRM:ASME + MOVOL:380V , CAPPRM:MHLW + MOVOL:200V) + COOL:AIR	1X7

Legend:

CAPPRE:IEC - Component approval electrical:IEC
CAPPRM:ASME - Component approval mechanical:ASME
CAPPRM:MHLW - Component approval mechanical:MHLW
COOL:AIR - Cooling:Air cooled
FREQ:60HZ - Frequency:60 Hz
IDRY:Y - Integrated dryer:Yes
MODEL:GA90VP_16 - Model:GA 90VSD+
MOVOL:200V - Supply voltage:200 V
MOVOL:380V - Supply voltage:380 V

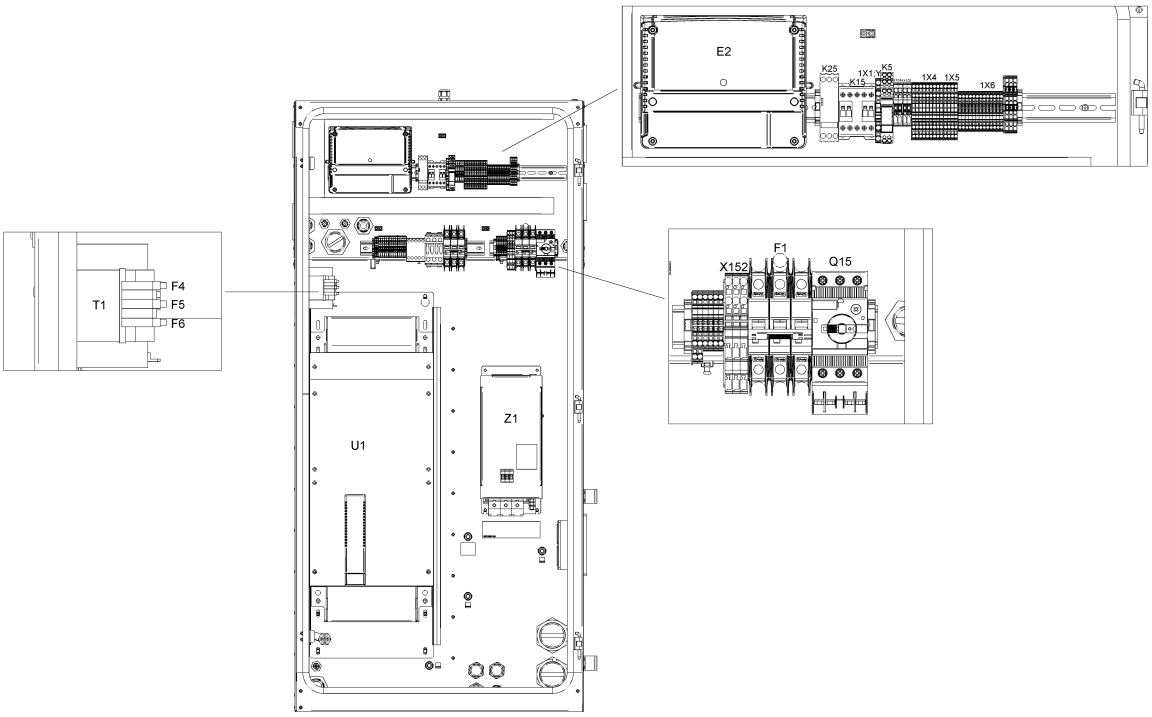
E2
K25
K15
1X1
K5
1X4
1X5
1X6
T1
F4
F5
F6
U1
Z1
F1
X152
Q15

Ref	Part Number	Qty	Name	Validity	EL
	1088 0039 35	1	PLATE	**(12/12/2018 - 24/02/2019)** (CAPPRM:ASME + MOVOL:380V , CAPPRM:MHLW + COOL:AIR + MOVOL:200V) **(25/02/2019 - 16/12/2019)** (CAPPRM:ASME + MOVOL:380V , CAPPRM:MHLW + MOVOL:200V) + COOL:AIR	1X6
	1088 0040 37	1	END PLATE	**(12/12/2018 - 24/02/2019)** (CAPPRM:ASME + MOVOL:380V , CAPPRM:MHLW + COOL:AIR + MOVOL:200V) **(25/02/2019 - 16/12/2019)** (CAPPRM:ASME + MOVOL:380V , CAPPRM:MHLW + MOVOL:200V) + COOL:AIR	1X7
	1088 0039 36	9	TERMINAL	**(12/12/2018 - 24/02/2019)** (CAPPRM:ASME + MOVOL:380V , CAPPRM:MHLW + COOL:AIR + MOVOL:200V) **(25/02/2019 - 16/12/2019)** (CAPPRM:ASME + MOVOL:380V , CAPPRM:MHLW + MOVOL:200V) + COOL:AIR	1X4
	1088 0039 36	4	TERMINAL	**(12/12/2018 - 24/02/2019)** (CAPPRM:ASME + MOVOL:380V , CAPPRM:MHLW + COOL:AIR + MOVOL:200V) **(25/02/2019 - 16/12/2019)** (CAPPRM:ASME + MOVOL:380V , CAPPRM:MHLW + MOVOL:200V) + COOL:AIR	1X6
	1088 0039 37	1	END PLATE	**(12/12/2018 - 24/02/2019)** (CAPPRM:ASME + MOVOL:380V , CAPPRM:MHLW + COOL:AIR + MOVOL:200V) **(25/02/2019 - 16/12/2019)** (CAPPRM:ASME + MOVOL:380V , CAPPRM:MHLW + MOVOL:200V) + COOL:AIR	1X4
	1088 0039 37	1	END PLATE	**(12/12/2018 - 24/02/2019)** (CAPPRM:ASME + MOVOL:380V , CAPPRM:MHLW + COOL:AIR + MOVOL:200V) **(25/02/2019 - 16/12/2019)** (CAPPRM:ASME + MOVOL:380V , CAPPRM:MHLW + MOVOL:200V) + COOL:AIR	1X6
	1088 0039 37	1	END PLATE	**(12/12/2018 - 24/02/2019)** (CAPPRM:ASME + MOVOL:380V , CAPPRM:MHLW + COOL:AIR + MOVOL:200V) **(25/02/2019 - 16/12/2019)** (CAPPRM:ASME + MOVOL:380V , CAPPRM:MHLW + MOVOL:200V) + COOL:AIR	1X1:Y/D
	1088 0037 81	1	CONNECTOR	**(12/12/2018 - 24/02/2019)** (CAPPRM:ASME + MOVOL:380V , CAPPRM:MHLW + COOL:AIR + MOVOL:200V) **(25/02/2019 - 16/12/2019)** (CAPPRM:ASME + MOVOL:380V , CAPPRM:MHLW + MOVOL:200V) + COOL:AIR	2X27
	1088 0037 80	1	CONNECTOR	**(12/12/2018 - 24/02/2019)** (CAPPRM:ASME + MOVOL:380V , CAPPRM:MHLW + COOL:AIR + MOVOL:200V) **(25/02/2019 - 16/12/2019)** (CAPPRM:ASME + MOVOL:380V , CAPPRM:MHLW + MOVOL:200V) + COOL:AIR	2X28
	1088 0031 32	1	CONNECTOR	**(12/12/2018 - 24/02/2019)** (CAPPRM:ASME + MOVOL:380V , CAPPRM:MHLW + COOL:AIR + MOVOL:200V) **(25/02/2019 - 16/12/2019)** (CAPPRM:ASME + MOVOL:380V , CAPPRM:MHLW + MOVOL:200V) + COOL:AIR	2X30
	1088 0031 26	1	CONNECTOR 6-POLE	**(12/12/2018 - 24/02/2019)** (CAPPRM:ASME + MOVOL:380V , CAPPRM:MHLW + COOL:AIR + MOVOL:200V) **(25/02/2019 - 16/12/2019)** (CAPPRM:ASME + MOVOL:380V , CAPPRM:MHLW + MOVOL:200V) + COOL:AIR	2X31
	~~1089 9664 06~~	1	SWITCH	**(12/12/2018 - 24/02/2019)** (CAPPRM:ASME + MOVOL:380V , CAPPRM:MHLW + COOL:AIR + MOVOL:200V) **(25/02/2019 - 16/12/2019)** (CAPPRM:ASME + MOVOL:380V , CAPPRM:MHLW + MOVOL:200V) + COOL:AIR	Q15
	Substituted by:	1089 9551 97 - AUX.CONTACT CIRCUIT BREAKER (quantity: 1)			

Legend:

CAPPRE:IEC - Component approval electrical:IEC
CAPPRM:ASME - Component approval mechanical:ASME
CAPPRM:MHLW - Component approval mechanical:MHLW
COOL:AIR - Cooling:Air cooled
FREQ:60HZ - Frequency:60 Hz
IDRY:Y - Integrated dryer:Yes
MODEL:GA90VP_16 - Model:GA 90VSD+
MOVOL:200V - Supply voltage:200 V
MOVOL:380V - Supply voltage:380 V

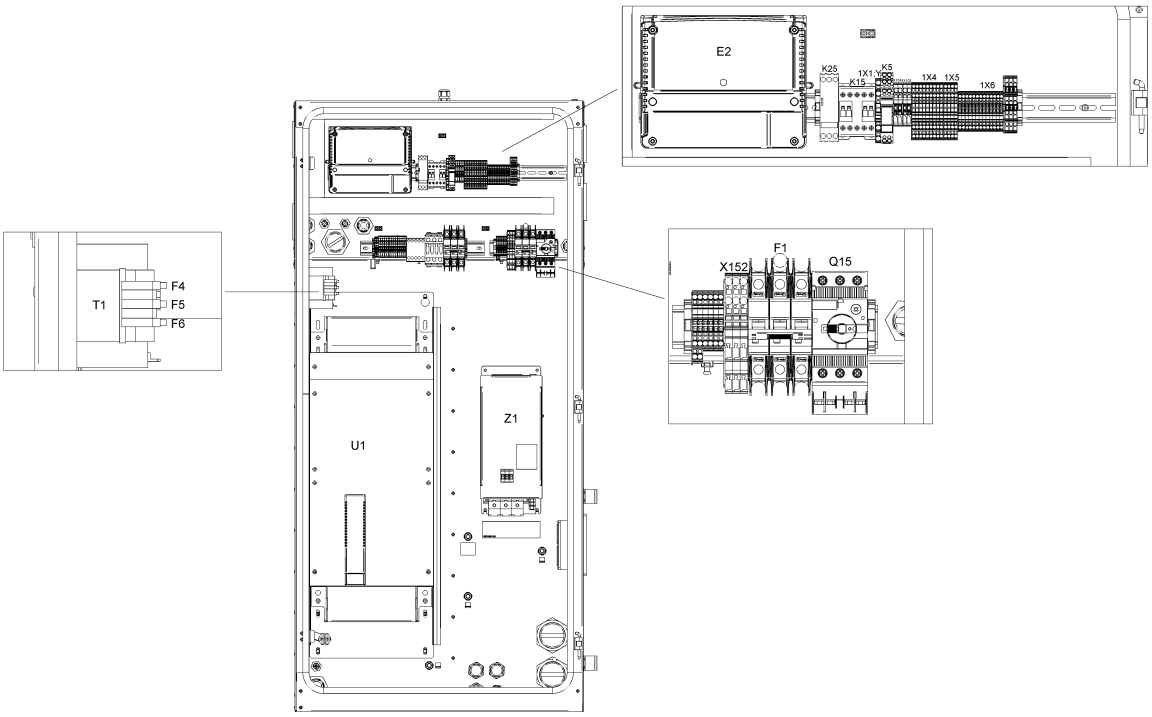
E2
K25
K15
1X1
K5
1X4
1X5
1X6
T1
F4
F5
F6
F1
X152
Q15
U1
Z1

Ref	Part Number	Qty	Name	Validity	EL
	1089 9551 18	1	CIRCUIT BREAKER	**(12/12/2018 - 24/02/2019)** (CAPPRM:ASME + MOVOL:380V , CAPPRM:MHLW + COOL:AIR + MOVOL:200V) **(25/02/2019 - 16/12/2019)** (CAPPRM:ASME + MOVOL:380V , CAPPRM:MHLW + MOVOL:200V) + COOL:AIR	Q15
	1088 0038 26	1	TERMINAL	**(12/12/2018 - 24/02/2019)** (CAPPRM:ASME + MOVOL:380V , CAPPRM:MHLW + COOL:AIR + MOVOL:200V) **(25/02/2019 - 16/12/2019)** (CAPPRM:ASME + MOVOL:380V , CAPPRM:MHLW + MOVOL:200V) + COOL:AIR	1X1:Y/D
	1089 9602 79	1	CONTACTOR 110 V	**(12/12/2018 - 24/02/2019)** (CAPPRM:ASME + MOVOL:380V , CAPPRM:MHLW + COOL:AIR + MOVOL:200V) **(25/02/2019 - 16/12/2019)** (CAPPRM:ASME + MOVOL:380V , CAPPRM:MHLW + MOVOL:200V) + COOL:AIR	K15
	1089 9461 26	1	PHASE SEQUENCE RELAY	**(12/12/2018 - 24/02/2019)** (CAPPRM:ASME + MOVOL:380V , CAPPRM:MHLW + COOL:AIR + MOVOL:200V) **(25/02/2019 - 16/12/2019)** (CAPPRM:ASME + MOVOL:380V , CAPPRM:MHLW + MOVOL:200V) + COOL:AIR	K25
	1088 0032 17	1	RELAY 115 VAC	**(12/12/2018 - 24/02/2019)** (CAPPRM:ASME + MOVOL:380V , CAPPRM:MHLW + COOL:AIR + MOVOL:200V) **(25/02/2019 - 16/12/2019)** (CAPPRM:ASME + MOVOL:380V , CAPPRM:MHLW + MOVOL:200V) + COOL:AIR	K5
	0991 8011 21	AR	CABLE TRAY	**(12/12/2018 - 24/02/2019)** (CAPPRM:ASME + MOVOL:380V , CAPPRM:MHLW + COOL:AIR + MOVOL:200V) **(25/02/2019 - 16/12/2019)** (CAPPRM:ASME + MOVOL:380V , CAPPRM:MHLW + MOVOL:200V) + COOL:AIR	L=1384mm
	1900 2203 01	1	DRYER RAIL	**(12/12/2018 - 24/02/2019)** (CAPPRM:ASME + MOVOL:380V , CAPPRM:MHLW + COOL:AIR + MOVOL:200V) **(25/02/2019 - 16/12/2019)** (CAPPRM:ASME + MOVOL:380V , CAPPRM:MHLW + MOVOL:200V) + COOL:AIR	
	Electrical legend:	With trafo on dryer			
	1088 0031 13	1	CONNECTOR 13-POLE	**(12/12/2018 - 24/02/2019)** (CAPPRM:ASME + MOVOL:380V , CAPPRM:MHLW + COOL:AIR + MOVOL:200V) **(25/02/2019 - 16/12/2019)** (CAPPRM:ASME + MOVOL:380V , CAPPRM:MHLW + MOVOL:200V) + COOL:AIR	1X30
	1088 0037 82	1	CONNECTOR	**(12/12/2018 - 24/02/2019)** (CAPPRM:ASME + MOVOL:380V , CAPPRM:MHLW + COOL:AIR + MOVOL:200V) **(25/02/2019 - 16/12/2019)** (CAPPRM:ASME + MOVOL:380V , CAPPRM:MHLW + MOVOL:200V) + COOL:AIR	3X34
	0697 9811 13	1	PLUG	**(12/12/2018 - 24/02/2019)** (CAPPRM:ASME + MOVOL:380V , CAPPRM:MHLW + COOL:AIR + MOVOL:200V) **(25/02/2019 - 16/12/2019)** (CAPPRM:ASME + MOVOL:380V , CAPPRM:MHLW + MOVOL:200V) + COOL:AIR	
	Electrical legend:	Energy recovery			
	0989 3700 44	1	LOCKNUT	**(12/12/2018 - 24/02/2019)** (CAPPRM:ASME + MOVOL:380V , CAPPRM:MHLW + COOL:AIR + MOVOL:200V) **(25/02/2019 - 16/12/2019)** (CAPPRM:ASME + MOVOL:380V , CAPPRM:MHLW + MOVOL:200V) + COOL:AIR	
	Electrical legend:	Energy recovery			
	0697 9811 12	1	PLUG	**(12/12/2018 - 24/02/2019)** (CAPPRM:ASME + MOVOL:380V , CAPPRM:MHLW + COOL:AIR + MOVOL:200V) **(25/02/2019 - 16/12/2019)** (CAPPRM:ASME + MOVOL:380V , CAPPRM:MHLW + MOVOL:200V) + COOL:AIR	
	Electrical legend:	Control circuit of T10			

Legend:

CAPPRE:IEC - Component approval electrical:IEC
CAPPRM:ASME - Component approval mechanical:ASME
CAPPRM:MHLW - Component approval mechanical:MHLW
COOL:AIR - Cooling:Air cooled
FREQ:60HZ - Frequency:60 Hz
IDRY:Y - Integrated dryer:Yes
MODEL:GA90VP_16 - Model:GA 90VSD+
MOVOL:200V - Supply voltage:200 V
MOVOL:380V - Supply voltage:380 V

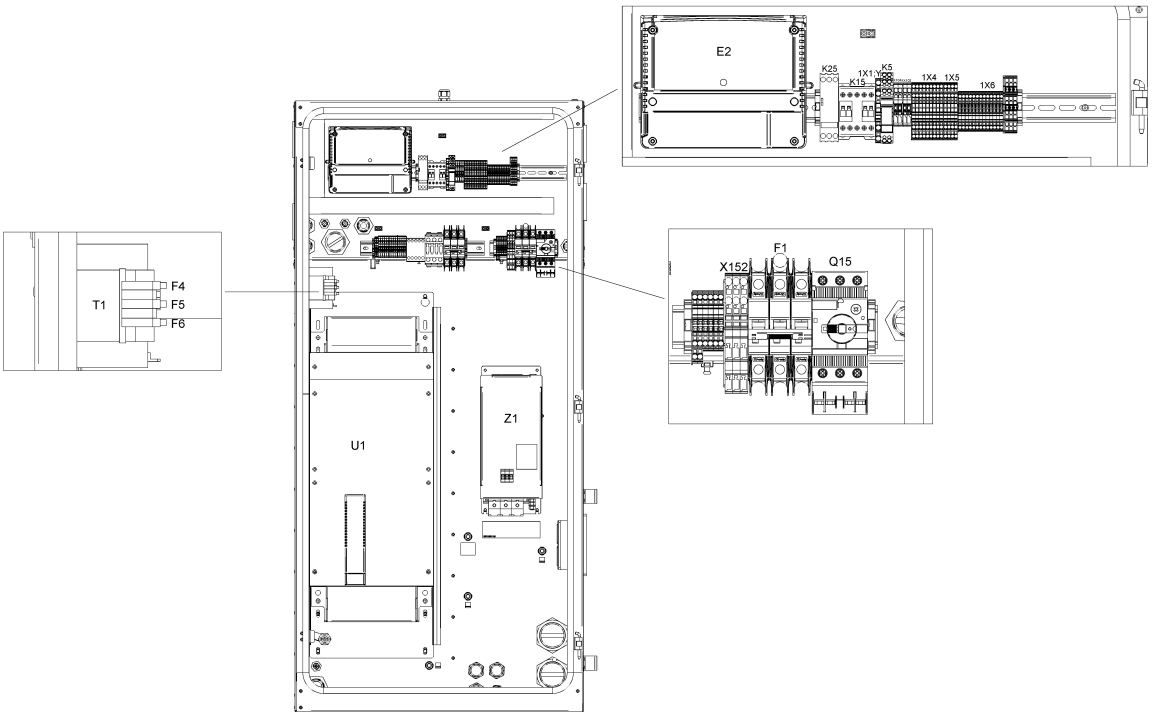
E2
K25
K15
1X1
K5
1X4
1X5
1X6
T1
F4
F5
F6
F1
X152
Q15
U1
Z1

21.21 - Cubicle components GA 90 VSD+ - 200V-380V/60Hz - IEC - Full-Feature (12/12/2018 - 16/12/2019)

(MOVOL:200V , MOVOL:380V) + CAPPRE:IEC + FREQ:60HZ + IDRY:Y + MODEL:GA90VP_16

Ref	Part Number	Qty	Name	Validity	EL
	0989 3700 43	1	NUT	**(12/12/2018 - 24/02/2019)** (CAPPRM:ASME + MOVOL:380V , CAPPRM:MHLW + COOL:AIR + MOVOL:200V) **(25/02/2019 - 16/12/2019)** (CAPPRM:ASME + MOVOL:380V , CAPPRM:MHLW + MOVOL:200V) + COOL:AIR	
	Electrical legend:	Control circuit of T10			
	0697 9811 10	1	PLUG	**(12/12/2018 - 24/02/2019)** (CAPPRM:ASME + MOVOL:380V , CAPPRM:MHLW + COOL:AIR + MOVOL:200V) **(25/02/2019 - 16/12/2019)** (CAPPRM:ASME + MOVOL:380V , CAPPRM:MHLW + MOVOL:200V) + COOL:AIR	
	Electrical legend:	Plug for smartbox hole			
	0989 3700 41	1	LOCKNUT	**(12/12/2018 - 24/02/2019)** (CAPPRM:ASME + MOVOL:380V , CAPPRM:MHLW + COOL:AIR + MOVOL:200V) **(25/02/2019 - 16/12/2019)** (CAPPRM:ASME + MOVOL:380V , CAPPRM:MHLW + MOVOL:200V) + COOL:AIR	
	Electrical legend:	Nut for smartbox hole			

Legend:

CAPPRE:IEC - Component approval electrical:IEC
CAPPRM:ASME - Component approval mechanical:ASME
CAPPRM:MHLW - Component approval mechanical:MHLW
COOL:AIR - Cooling:Air cooled
FREQ:60HZ - Frequency:60 Hz
IDRY:Y - Integrated dryer:Yes
MODEL:GA90VP_16 - Model:GA 90VSD+
MOVOL:200V - Supply voltage:200 V
MOVOL:380V - Supply voltage:380 V

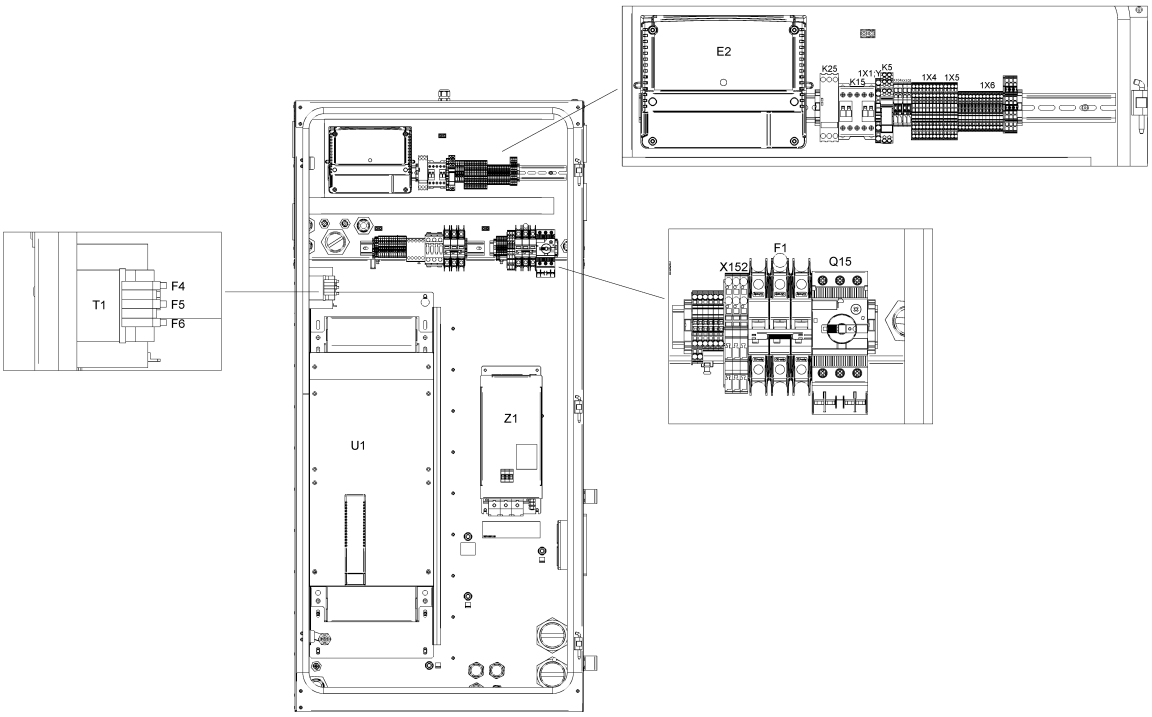
E2
K25
K15
1X1
K5
1X4
1X5
1X6
T1
F4
F5
F6
F1
X152
Q15
U1
Z1

Ref	Part Number	Qty	Name	Validity	EL
	1900220248	1	CUBICLE	**(17/12/2019 - ...)**	
	9820 3000 31	1	ASSEMBLY DRAWING	**(25/02/2019 - 16/12/2019)** CAPPRM:ASME + COOL:WATER + MOVOL:380V **(17/12/2019 - ...)** (CAPPRM:ASME + MOVOL:380V , CAPPRM:MHLW + COOL:AIR + MOVOL:200V)	AD
	9820 3000 27	1	SERVICE DIAGRAM	**(25/02/2019 - 16/12/2019)** CAPPRM:ASME + COOL:WATER + MOVOL:380V **(17/12/2019 - ...)** (CAPPRM:ASME + MOVOL:380V , CAPPRM:MHLW + COOL:AIR + MOVOL:200V)	SD
	1622 3798 72	1	WIRE HARNESS	**(25/02/2019 - 16/12/2019)** CAPPRM:ASME + COOL:WATER + MOVOL:380V **(17/12/2019 - ...)** (CAPPRM:ASME + MOVOL:380V , CAPPRM:MHLW + COOL:AIR + MOVOL:200V)	Comm Cable
	1622 5099 04	1	DI CHANE CABLE (1400MM)	**(25/02/2019 - 16/12/2019)** CAPPRM:ASME + COOL:WATER + MOVOL:380V **(17/12/2019 - ...)** (CAPPRM:ASME + MOVOL:380V , CAPPRM:MHLW + COOL:AIR + MOVOL:200V)	
	Electrical legend:	Comm Cable Loose supply			
	1649 8006 00	1	CUBICLE	**(25/02/2019 - 16/12/2019)** CAPPRM:ASME + COOL:WATER + MOVOL:380V **(17/12/2019 - ...)** (CAPPRM:ASME + MOVOL:380V , CAPPRM:MHLW + COOL:AIR + MOVOL:200V)	MSA
	1649 8001 32	1	PLATE NEOS "D"	**(25/02/2019 - 16/12/2019)** CAPPRM:ASME + COOL:WATER + MOVOL:380V **(17/12/2019 - ...)** (CAPPRM:ASME + MOVOL:380V , CAPPRM:MHLW + COOL:AIR + MOVOL:200V)	
	Electrical legend:	Mounting plate			
	1649 8003 85	1	MOUNTING PLATE	**(25/02/2019 - 16/12/2019)** CAPPRM:ASME + COOL:WATER + MOVOL:380V **(17/12/2019 - ...)** (CAPPRM:ASME + MOVOL:380V , CAPPRM:MHLW + COOL:AIR + MOVOL:200V)	
	Electrical legend:	Mounting plate			
	1649 8002 39	1	WIRE HARNESS	**(25/02/2019 - 16/12/2019)** CAPPRM:ASME + COOL:WATER + MOVOL:380V **(17/12/2019 - ...)** (CAPPRM:ASME + MOVOL:380V , CAPPRM:MHLW + COOL:AIR + MOVOL:200V)	WH
	1649 8002 40	1	WIRE HARNESS	**(25/02/2019 - 16/12/2019)** CAPPRM:ASME + COOL:WATER + MOVOL:380V **(17/12/2019 - ...)** (CAPPRM:ASME + MOVOL:380V , CAPPRM:MHLW + COOL:AIR + MOVOL:200V)	WH
	1649 8002 72	1	CABLE POWER	**(25/02/2019 - 16/12/2019)** CAPPRM:ASME + COOL:WATER + MOVOL:380V **(17/12/2019 - ...)** (CAPPRM:ASME + MOVOL:380V , CAPPRM:MHLW + COOL:AIR + MOVOL:200V)	
	Electrical legend:	Full feature (FF) Drain			
	1649 8002 73	1	WIRE HARNESS	**(25/02/2019 - 16/12/2019)** CAPPRM:ASME + COOL:WATER + MOVOL:380V **(17/12/2019 - ...)** (CAPPRM:ASME + MOVOL:380V , CAPPRM:MHLW + COOL:AIR + MOVOL:200V)	
	Electrical legend:	Pack Drain + Air filter switch			
	1649 8002 75	1	WIRE HARNESS	**(25/02/2019 - 16/12/2019)** CAPPRM:ASME + COOL:WATER + MOVOL:380V **(17/12/2019 - ...)** (CAPPRM:ASME + MOVOL:380V , CAPPRM:MHLW + COOL:AIR + MOVOL:200V)	
	Electrical legend:	Relative Humidity sensor			
	1649 8001 44	3	MOTOR CABLE	**(25/02/2019 - 16/12/2019)** CAPPRM:ASME + COOL:WATER + MOVOL:380V **(17/12/2019 - ...)** (CAPPRM:ASME + MOVOL:380V , CAPPRM:MHLW + COOL:AIR + MOVOL:200V)	
	Electrical legend:	Motor conduit			

Legend:

CAPPRE:IEC - Component approval electrical:IEC
CAPPRM:ASME - Component approval mechanical:ASME
CAPPRM:MHLW - Component approval mechanical:MHLW
COOL:AIR - Cooling:Air cooled
COOL:WATER - Cooling:Water cooled
FREQ:60HZ - Frequency:60 Hz
IDRY:Y - Integrated dryer:Yes
MODEL:GA90VP_16 - Model:GA 90VSD+
MOVOL:200V - Supply voltage:200 V
MOVOL:380V - Supply voltage:380 V

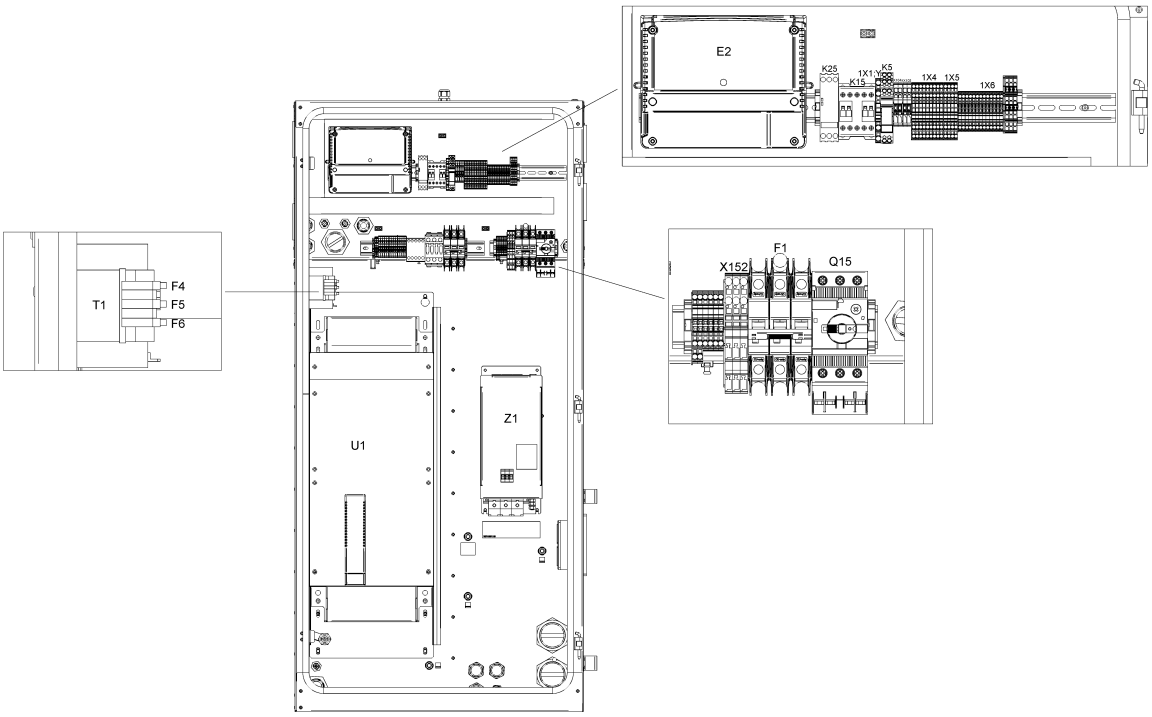
E2
K25
K15
1X1
K5
1X4
1X5
1X6
T1
F4
F5
F6
F1
X152
Q15
U1
Z1

Ref	Part Number	Qty	Name	Validity	EL
	1649 8001 47	1	MOTOR CABLE	**(25/02/2019 - 16/12/2019)** CAPPRM:ASME + COOL:WATER + MOVOL:380V **(17/12/2019 - ...)** (CAPPRM:ASME + MOVOL:380V , CAPPRM:MHLW + COOL:AIR + MOVOL:200V)	
	Electrical legend:	Motor conduit			
	1625 3906 31	1	DATA LABEL	**(25/02/2019 - 16/12/2019)** CAPPRM:ASME + COOL:WATER + MOVOL:380V **(17/12/2019 - ...)** (CAPPRM:ASME + MOVOL:380V , CAPPRM:MHLW + COOL:AIR + MOVOL:200V)	Label
	1079 9901 68	1	WARNING LABEL	**(25/02/2019 - 16/12/2019)** CAPPRM:ASME + COOL:WATER + MOVOL:380V **(17/12/2019 - ...)** (CAPPRM:ASME + MOVOL:380V , CAPPRM:MHLW + COOL:AIR + MOVOL:200V)	Label
	1649 8005 00	0	LABEL	**(25/02/2019 - 16/12/2019)** CAPPRM:ASME + COOL:WATER + MOVOL:380V **(17/12/2019 - ...)** (CAPPRM:ASME + MOVOL:380V , CAPPRM:MHLW + COOL:AIR + MOVOL:200V)	Label
	1900 5350 14	1	INVERTER	**(25/02/2019 - 16/12/2019)** CAPPRM:ASME + COOL:WATER + MOVOL:380V **(17/12/2019 - ...)** (CAPPRM:ASME + MOVOL:380V , CAPPRM:MHLW + COOL:AIR + MOVOL:200V)	U1
	1631 2079 00	1	NANOPERMRING	**(25/02/2019 - 16/12/2019)** CAPPRM:ASME + COOL:WATER + MOVOL:380V **(17/12/2019 - ...)** (CAPPRM:ASME + MOVOL:380V , CAPPRM:MHLW + COOL:AIR + MOVOL:200V)	
	Electrical legend:	Nanoperm ring			
	0697 9811 17	2	PLUG	**(25/02/2019 - 16/12/2019)** CAPPRM:ASME + COOL:WATER + MOVOL:380V **(17/12/2019 - ...)** (CAPPRM:ASME + MOVOL:380V , CAPPRM:MHLW + COOL:AIR + MOVOL:200V)	
	Electrical legend:	Plug for transfo supply			
	0989 3700 48	2	NUT	**(25/02/2019 - 16/12/2019)** CAPPRM:ASME + COOL:WATER + MOVOL:380V **(17/12/2019 - ...)** (CAPPRM:ASME + MOVOL:380V , CAPPRM:MHLW + COOL:AIR + MOVOL:200V)	
	Electrical legend:	Nut for transfo supply			
	0698 5140 72	1	CABLE GLAND	**(25/02/2019 - 16/12/2019)** CAPPRM:ASME + COOL:WATER + MOVOL:380V **(17/12/2019 - ...)** (CAPPRM:ASME + MOVOL:380V , CAPPRM:MHLW + COOL:AIR + MOVOL:200V)	Fan
	0698 5140 71	1	CABLE GLAND	**(25/02/2019 - 16/12/2019)** CAPPRM:ASME + COOL:WATER + MOVOL:380V **(17/12/2019 - ...)** (CAPPRM:ASME + MOVOL:380V , CAPPRM:MHLW + COOL:AIR + MOVOL:200V)	
	Electrical legend:	Ambient sensor			
	0697 9809 20	1	LOCKNUT	**(25/02/2019 - 16/12/2019)** CAPPRM:ASME + COOL:WATER + MOVOL:380V **(17/12/2019 - ...)** (CAPPRM:ASME + MOVOL:380V , CAPPRM:MHLW + COOL:AIR + MOVOL:200V)	
	Electrical legend:	Ambient sensor			
	1089 9556 44	1	FAN WITH FILTER	**(25/02/2019 - 16/12/2019)** CAPPRM:ASME + COOL:WATER + MOVOL:380V **(17/12/2019 - ...)** (CAPPRM:ASME + MOVOL:380V , CAPPRM:MHLW + COOL:AIR + MOVOL:200V)	Cubicle fan
	1089 9556 72	4	AIR INLET WITHOUT FILTER	**(25/02/2019 - 16/12/2019)** CAPPRM:ASME + COOL:WATER + MOVOL:380V **(17/12/2019 - ...)** (CAPPRM:ASME + MOVOL:380V , CAPPRM:MHLW + COOL:AIR + MOVOL:200V)	Filter grid

Legend:

CAPPRE:IEC - Component approval electrical:IEC
CAPPRM:ASME - Component approval mechanical:ASME
CAPPRM:MHLW - Component approval mechanical:MHLW
COOL:AIR - Cooling:Air cooled
COOL:WATER - Cooling:Water cooled
FREQ:60HZ - Frequency:60 Hz
IDRY:Y - Integrated dryer:Yes
MODEL:GA90VP_16 - Model:GA 90VSD+
MOVOL:200V - Supply voltage:200 V
MOVOL:380V - Supply voltage:380 V

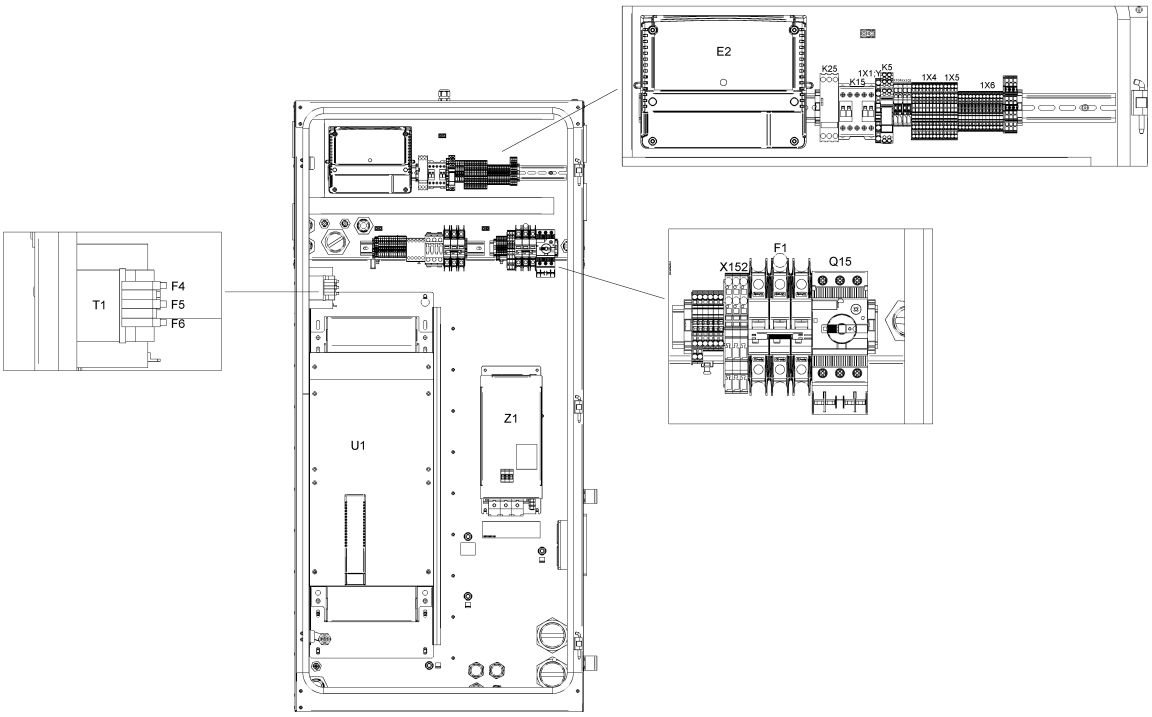
E2
K25
K15
1X1
K5
1X4
1X5
1X6
T1
F4
F5
F6
F1
X152
Q15
U1
Z1

Ref	Part Number	Qty	Name	Validity	EL
	1088 0032 09	1	CONNECTOR	**(25/02/2019 - 16/12/2019)** CAPPRM:ASME + COOL:WATER + MOVOL:380V **(17/12/2019 - ...)** (CAPPRM:ASME + MOVOL:380V , CAPPRM:MHLW + COOL:AIR + MOVOL:200V)	X3
	1089 9572 06	1	LINE FILTER	**(25/02/2019 - 16/12/2019)** CAPPRM:ASME + COOL:WATER + MOVOL:380V **(17/12/2019 - ...)** (CAPPRM:ASME + MOVOL:380V , CAPPRM:MHLW + COOL:AIR + MOVOL:200V)	Z1 for 90kw
	1089 9562 04	1	STRAP	**(25/02/2019 - 16/12/2019)** CAPPRM:ASME + COOL:WATER + MOVOL:380V **(17/12/2019 - ...)** (CAPPRM:ASME + MOVOL:380V , CAPPRM:MHLW + COOL:AIR + MOVOL:200V)	HF-screen
	1089 9514 56	1	TRANSFORMER	**(25/02/2019 - 16/12/2019)** CAPPRM:ASME + COOL:WATER + MOVOL:380V **(17/12/2019 - ...)** (CAPPRM:ASME + MOVOL:380V , CAPPRM:MHLW + COOL:AIR + MOVOL:200V)	T1
	1089 9522 26	1	CIRCUIT BREAKER	**(25/02/2019 - 16/12/2019)** CAPPRM:ASME + COOL:WATER + MOVOL:380V **(17/12/2019 - ...)** (CAPPRM:ASME + MOVOL:380V , CAPPRM:MHLW + COOL:AIR + MOVOL:200V)	F1
	1089 9513 41	1	PUSH BUTTON	**(25/02/2019 - 16/12/2019)** CAPPRM:ASME + COOL:WATER + MOVOL:380V **(17/12/2019 - ...)** (CAPPRM:ASME + MOVOL:380V , CAPPRM:MHLW + COOL:AIR + MOVOL:200V)	S3
	1089 9513 28	1	HOLDER	**(25/02/2019 - 16/12/2019)** CAPPRM:ASME + COOL:WATER + MOVOL:380V **(17/12/2019 - ...)** (CAPPRM:ASME + MOVOL:380V , CAPPRM:MHLW + COOL:AIR + MOVOL:200V)	S3
	~~1089 9513 30~~	4	CONTACTOR	**(25/02/2019 - 16/12/2019)** CAPPRM:ASME + COOL:WATER + MOVOL:380V **(17/12/2019 - ...)** (CAPPRM:ASME + MOVOL:380V , CAPPRM:MHLW + COOL:AIR + MOVOL:200V)	S3
	Substituted by:	1089 9513 04 - CONTACT BLOCK (quantity: 1)			
	1088 0039 07	3	TERMINAL	**(25/02/2019 - 16/12/2019)** CAPPRM:ASME + COOL:WATER + MOVOL:380V **(17/12/2019 - ...)** (CAPPRM:ASME + MOVOL:380V , CAPPRM:MHLW + COOL:AIR + MOVOL:200V)	X152
	1088 0039 05	1	PLATE	**(25/02/2019 - 16/12/2019)** CAPPRM:ASME + COOL:WATER + MOVOL:380V **(17/12/2019 - ...)** (CAPPRM:ASME + MOVOL:380V , CAPPRM:MHLW + COOL:AIR + MOVOL:200V)	X152
	1088 0039 26	1	CONNECTOR	**(25/02/2019 - 16/12/2019)** CAPPRM:ASME + COOL:WATER + MOVOL:380V **(17/12/2019 - ...)** (CAPPRM:ASME + MOVOL:380V , CAPPRM:MHLW + COOL:AIR + MOVOL:200V)	
	Electrical legend:	X152 (remove coding pin 1,3)			
	1088 0037 99	4	PIN	**(25/02/2019 - 16/12/2019)** CAPPRM:ASME + COOL:WATER + MOVOL:380V **(17/12/2019 - ...)** (CAPPRM:ASME + MOVOL:380V , CAPPRM:MHLW + COOL:AIR + MOVOL:200V)	X152:1; 3
	~~1088 0031 81~~	7	END STOP BRACKET 6MM	**(25/02/2019 - 16/12/2019)** CAPPRM:ASME + COOL:WATER + MOVOL:380V **(17/12/2019 - ...)** (CAPPRM:ASME + MOVOL:380V , CAPPRM:MHLW + COOL:AIR + MOVOL:200V)	
	Electrical legend:	Connector/terminal rail			
	Substituted by:	1089 0577 82 - END RETAINER (quantity: 1)			
	1088 0039 38	2	TERMINAL	**(25/02/2019 - 16/12/2019)** CAPPRM:ASME + COOL:WATER + MOVOL:380V **(17/12/2019 - ...)** (CAPPRM:ASME + MOVOL:380V , CAPPRM:MHLW + COOL:AIR + MOVOL:200V)	1X11:2,5

Legend:

CAPPRE:IEC - Component approval electrical:IEC
COOL:AIR - Cooling:Air cooled
IDRY:Y - Integrated dryer:Yes
MOVOL:380V - Supply voltage:380 V
CAPPRM:ASME - Component approval mechanical:ASME
COOL:WATER - Cooling:Water cooled
MODEL:GA90VP_16 - Model:GA 90VSD+
CAPPRM:MHLW - Component approval mechanical:MHLW
FREQ:60HZ - Frequency:60 Hz
MOVOL:200V - Supply voltage:200 V

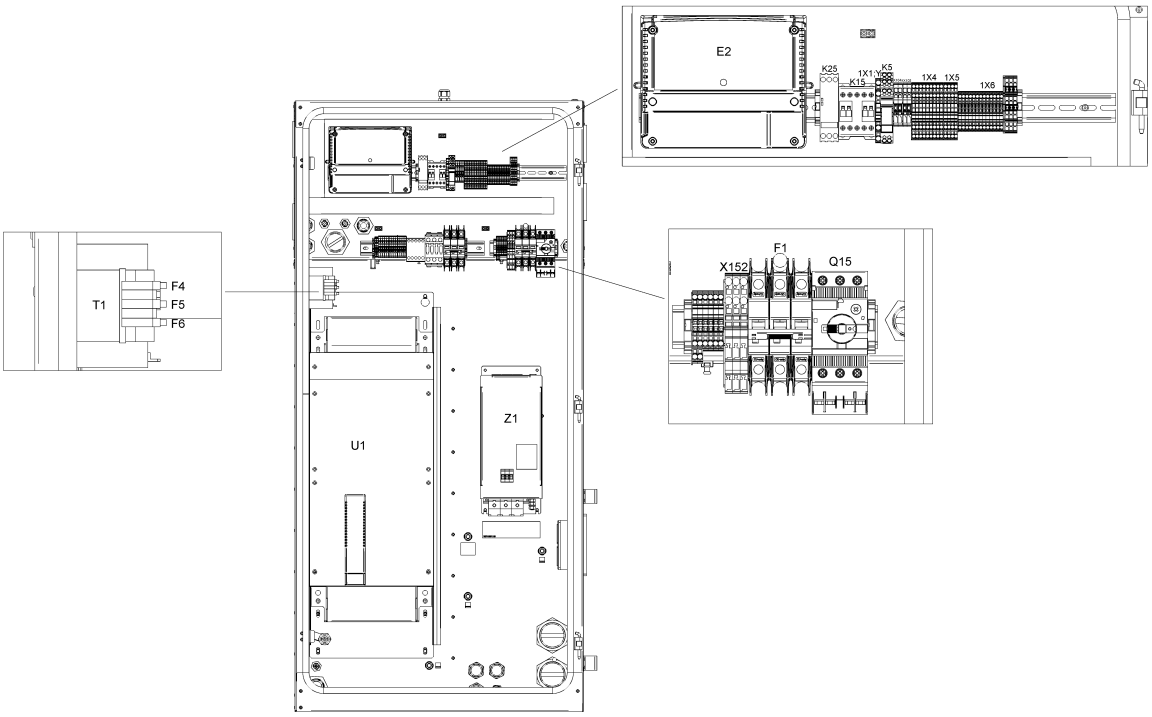
E2
K25
K15
1X1
K5
1X4
1X5
1X6
T1
F4
F5
F6
F1
X152
Q15
U1
Z1

Ref	Part Number	Qty	Name	Validity	EL
	1088 0039 40	1	PLATE	**(25/02/2019 - 16/12/2019)** CAPPRM:ASME + COOL:WATER + MOVOL:380V **(17/12/2019 - ...)** (CAPPRM:ASME + MOVOL:380V , CAPPRM:MHLW + COOL:AIR + MOVOL:200V)	1X11
	1088 0039 34	4	TERMINAL	**(25/02/2019 - 16/12/2019)** CAPPRM:ASME + COOL:WATER + MOVOL:380V **(17/12/2019 - ...)** (CAPPRM:ASME + MOVOL:380V , CAPPRM:MHLW + COOL:AIR + MOVOL:200V)	
	Electrical legend:	1X11:30,301,34			
	1088 0039 35	1	PLATE	**(25/02/2019 - 16/12/2019)** CAPPRM:ASME + COOL:WATER + MOVOL:380V **(17/12/2019 - ...)** (CAPPRM:ASME + MOVOL:380V , CAPPRM:MHLW + COOL:AIR + MOVOL:200V)	1X11
	1088 0039 04	2	TERMINAL	**(25/02/2019 - 16/12/2019)** CAPPRM:ASME + COOL:WATER + MOVOL:380V **(17/12/2019 - ...)** (CAPPRM:ASME + MOVOL:380V , CAPPRM:MHLW + COOL:AIR + MOVOL:200V)	X104a
	1088 0037 99	2	PIN	**(25/02/2019 - 16/12/2019)** CAPPRM:ASME + COOL:WATER + MOVOL:380V **(17/12/2019 - ...)** (CAPPRM:ASME + MOVOL:380V , CAPPRM:MHLW + COOL:AIR + MOVOL:200V)	X104a/X105
	1088 0039 02	1	PLATE	**(25/02/2019 - 16/12/2019)** CAPPRM:ASME + COOL:WATER + MOVOL:380V **(17/12/2019 - ...)** (CAPPRM:ASME + MOVOL:380V , CAPPRM:MHLW + COOL:AIR + MOVOL:200V)	X104a
	1088 0039 07	2	TERMINAL	**(25/02/2019 - 16/12/2019)** CAPPRM:ASME + COOL:WATER + MOVOL:380V **(17/12/2019 - ...)** (CAPPRM:ASME + MOVOL:380V , CAPPRM:MHLW + COOL:AIR + MOVOL:200V)	X105
	1088 0039 05	1	PLATE	**(25/02/2019 - 16/12/2019)** CAPPRM:ASME + COOL:WATER + MOVOL:380V **(17/12/2019 - ...)** (CAPPRM:ASME + MOVOL:380V , CAPPRM:MHLW + COOL:AIR + MOVOL:200V)	X105
	1088 0039 34	13	TERMINAL	**(25/02/2019 - 16/12/2019)** CAPPRM:ASME + COOL:WATER + MOVOL:380V **(17/12/2019 - ...)** (CAPPRM:ASME + MOVOL:380V , CAPPRM:MHLW + COOL:AIR + MOVOL:200V)	1X6
	1088 0037 69	3	CONNECTOR	**(25/02/2019 - 16/12/2019)** CAPPRM:ASME + COOL:WATER + MOVOL:380V **(17/12/2019 - ...)** (CAPPRM:ASME + MOVOL:380V , CAPPRM:MHLW + COOL:AIR + MOVOL:200V)	1X7
	1088 0039 35	1	PLATE	**(25/02/2019 - 16/12/2019)** CAPPRM:ASME + COOL:WATER + MOVOL:380V **(17/12/2019 - ...)** (CAPPRM:ASME + MOVOL:380V , CAPPRM:MHLW + COOL:AIR + MOVOL:200V)	1X6
	1088 0040 37	1	END PLATE	**(25/02/2019 - 16/12/2019)** CAPPRM:ASME + COOL:WATER + MOVOL:380V **(17/12/2019 - ...)** (CAPPRM:ASME + MOVOL:380V , CAPPRM:MHLW + COOL:AIR + MOVOL:200V)	1X7
	1088 0039 36	9	TERMINAL	**(25/02/2019 - 16/12/2019)** CAPPRM:ASME + COOL:WATER + MOVOL:380V **(17/12/2019 - ...)** (CAPPRM:ASME + MOVOL:380V , CAPPRM:MHLW + COOL:AIR + MOVOL:200V)	1X4
	1088 0039 36	4	TERMINAL	**(25/02/2019 - 16/12/2019)** CAPPRM:ASME + COOL:WATER + MOVOL:380V **(17/12/2019 - ...)** (CAPPRM:ASME + MOVOL:380V , CAPPRM:MHLW + COOL:AIR + MOVOL:200V)	1X6

Legend:

CAPPRE:IEC - Component approval electrical:IEC
CAPPRM:ASME - Component approval mechanical:ASME
CAPPRM:MHLW - Component approval mechanical:MHLW
COOL:AIR - Cooling:Air cooled
COOL:WATER - Cooling:Water cooled
FREQ:60HZ - Frequency:60 Hz
IDRY:Y - Integrated dryer:Yes
MODEL:GA90VP_16 - Model:GA 90VSD+
MOVOL:200V - Supply voltage:200 V
MOVOL:380V - Supply voltage:380 V

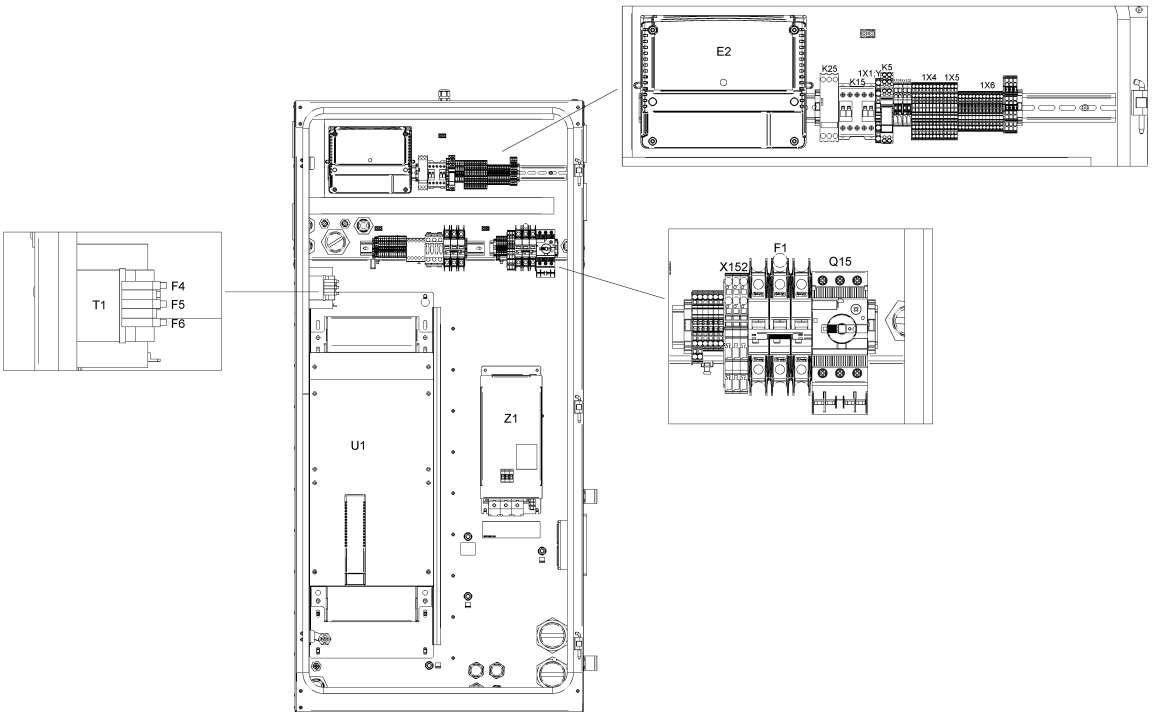
E2
K25
K15
1X1
K5
1X4
1X5
1X6
T1
F4
F5
F6
F1
X152
Q15
U1
Z1

21.22 - Cubicle components GA 90 VSD+ - 200V-380V/60Hz - IEC - Full-Feature (17/12/2019 - ...)

(MOVOL:200V , MOVOL:380V) + CAPPRE:IEC + FREQ:60HZ + IDRY:Y + MODEL:GA90VP_16

Ref	Part Number	Qty	Name	Validity	EL
	1088 0039 37	1	END PLATE	**(25/02/2019 - 16/12/2019)** CAPPRM:ASME + COOL:WATER + MOVOL:380V **(17/12/2019 - ...)** (CAPPRM:ASME + MOVOL:380V , CAPPRM:MHLW + COOL:AIR + MOVOL:200V)	1X4
	1088 0039 37	1	END PLATE	**(25/02/2019 - 16/12/2019)** CAPPRM:ASME + COOL:WATER + MOVOL:380V **(17/12/2019 - ...)** (CAPPRM:ASME + MOVOL:380V , CAPPRM:MHLW + COOL:AIR + MOVOL:200V)	1X6
	1088 0039 37	1	END PLATE	**(25/02/2019 - 16/12/2019)** CAPPRM:ASME + COOL:WATER + MOVOL:380V **(17/12/2019 - ...)** (CAPPRM:ASME + MOVOL:380V , CAPPRM:MHLW + COOL:AIR + MOVOL:200V)	1X1:Y/D
	1088 0037 81	1	CONNECTOR	**(25/02/2019 - 16/12/2019)** CAPPRM:ASME + COOL:WATER + MOVOL:380V **(17/12/2019 - ...)** (CAPPRM:ASME + MOVOL:380V , CAPPRM:MHLW + COOL:AIR + MOVOL:200V)	2X27
	1088 0037 80	1	CONNECTOR	**(25/02/2019 - 16/12/2019)** CAPPRM:ASME + COOL:WATER + MOVOL:380V **(17/12/2019 - ...)** (CAPPRM:ASME + MOVOL:380V , CAPPRM:MHLW + COOL:AIR + MOVOL:200V)	2X28
	1088 0031 32	1	CONNECTOR	**(25/02/2019 - 16/12/2019)** CAPPRM:ASME + COOL:WATER + MOVOL:380V **(17/12/2019 - ...)** (CAPPRM:ASME + MOVOL:380V , CAPPRM:MHLW + COOL:AIR + MOVOL:200V)	2X30
	1088 0031 26	1	CONNECTOR 6-POLE	**(25/02/2019 - 16/12/2019)** CAPPRM:ASME + COOL:WATER + MOVOL:380V **(17/12/2019 - ...)** (CAPPRM:ASME + MOVOL:380V , CAPPRM:MHLW + COOL:AIR + MOVOL:200V)	2X31
	~~1089 9664 06~~	1	SWITCH	**(25/02/2019 - 16/12/2019)** CAPPRM:ASME + COOL:WATER + MOVOL:380V **(17/12/2019 - ...)** (CAPPRM:ASME + MOVOL:380V , CAPPRM:MHLW + COOL:AIR + MOVOL:200V)	Q15
	Substituted by:	1089 9551 97 - AUX.CONTACT CIRCUIT BREAKER (quantity: 1)			
	1089 9551 18	1	CIRCUIT BREAKER	**(25/02/2019 - 16/12/2019)** CAPPRM:ASME + COOL:WATER + MOVOL:380V **(17/12/2019 - ...)** (CAPPRM:ASME + MOVOL:380V , CAPPRM:MHLW + COOL:AIR + MOVOL:200V)	Q15
	1088 0038 26	1	TERMINAL	**(25/02/2019 - 16/12/2019)** CAPPRM:ASME + COOL:WATER + MOVOL:380V **(17/12/2019 - ...)** (CAPPRM:ASME + MOVOL:380V , CAPPRM:MHLW + COOL:AIR + MOVOL:200V)	1X1:Y/D
	1089 9602 79	1	CONTACTOR 110 V	**(25/02/2019 - 16/12/2019)** CAPPRM:ASME + COOL:WATER + MOVOL:380V **(17/12/2019 - ...)** (CAPPRM:ASME + MOVOL:380V , CAPPRM:MHLW + COOL:AIR + MOVOL:200V)	K15
	1089 9461 26	1	PHASE SEQUENCE RELAY	**(25/02/2019 - 16/12/2019)** CAPPRM:ASME + COOL:WATER + MOVOL:380V **(17/12/2019 - ...)** (CAPPRM:ASME + MOVOL:380V , CAPPRM:MHLW + COOL:AIR + MOVOL:200V)	K25
	1088 0032 17	1	RELAY 115 VAC	**(25/02/2019 - 16/12/2019)** CAPPRM:ASME + COOL:WATER + MOVOL:380V **(17/12/2019 - ...)** (CAPPRM:ASME + MOVOL:380V , CAPPRM:MHLW + COOL:AIR + MOVOL:200V)	K5
	0991 8011 21	AR	CABLE TRAY	**(25/02/2019 - 16/12/2019)** CAPPRM:ASME + COOL:WATER + MOVOL:380V **(17/12/2019 - ...)** (CAPPRM:ASME + MOVOL:380V , CAPPRM:MHLW + COOL:AIR + MOVOL:200V)	L=1384mm

Legend:

CAPPRE:IEC - Component approval electrical:IEC
CAPPRM:ASME - Component approval mechanical:ASME
CAPPRM:MHLW - Component approval mechanical:MHLW
COOL:AIR - Cooling:Air cooled
COOL:WATER - Cooling:Water cooled
FREQ:60HZ - Frequency:60 Hz
IDRY:Y - Integrated dryer:Yes
MODEL:GA90VP_16 - Model:GA 90VSD+
MOVOL:200V - Supply voltage:200 V
MOVOL:380V - Supply voltage:380 V

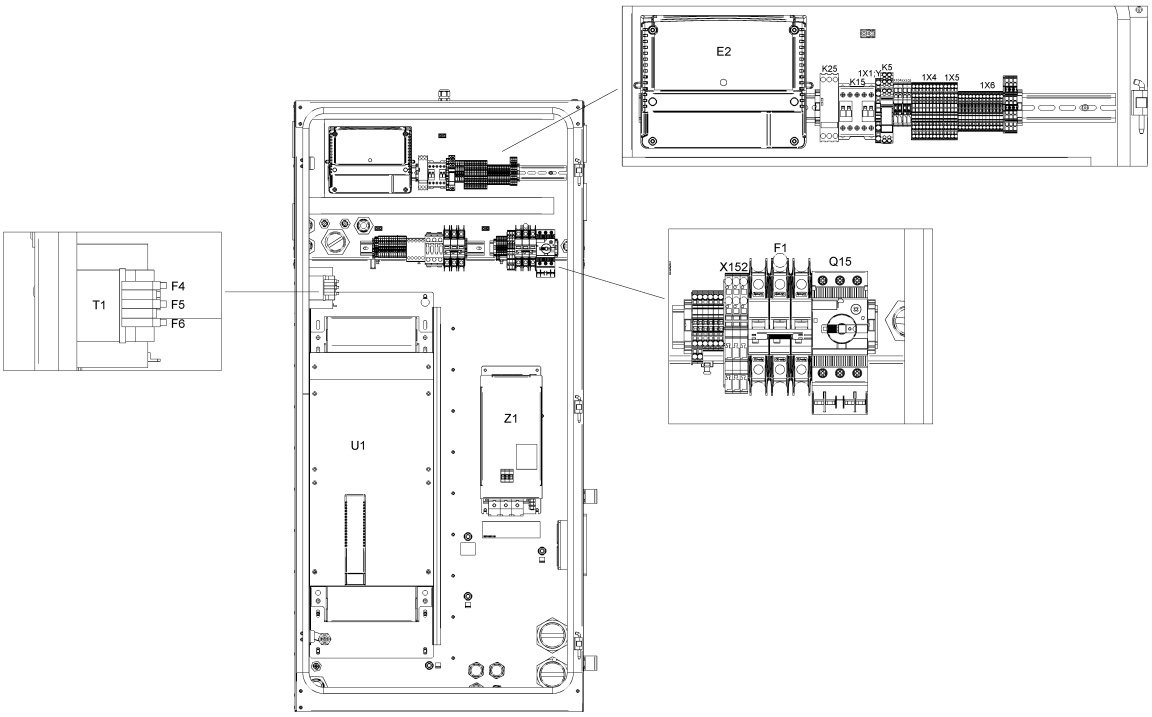
E2
K25
K15
1X1
K5
1X4
1X5
1X6
T1
F4
F5
F6
F1
X152
Q15
U1
Z1

21.22 - Cubicle components GA 90 VSD+ - 200V-380V/60Hz - IEC - Full-Feature (17/12/2019 - ...)

(MOVOL:200V , MOVOL:380V) + CAPPRE:IEC + FREQ:60HZ + IDRY:Y + MODEL:GA90VP_16

Ref	Part Number	Qty	Name	Validity	EL
	1900 2203 01	1	DRYER RAIL	**(25/02/2019 - 16/12/2019)** CAPPRM:ASME + COOL:WATER + MOVOL:380V **(17/12/2019 - ...)** (CAPPRM:ASME + MOVOL:380V , CAPPRM:MHLW + COOL:AIR + MOVOL:200V)	
	Electrical legend:	With trafo on dryer			
	1088 0031 13	1	CONNECTOR 13-POLE	**(25/02/2019 - 16/12/2019)** CAPPRM:ASME + COOL:WATER + MOVOL:380V **(17/12/2019 - ...)** (CAPPRM:ASME + MOVOL:380V , CAPPRM:MHLW + COOL:AIR + MOVOL:200V)	1X30
	1088 0037 82	1	CONNECTOR	**(25/02/2019 - 16/12/2019)** CAPPRM:ASME + COOL:WATER + MOVOL:380V **(17/12/2019 - ...)** (CAPPRM:ASME + MOVOL:380V , CAPPRM:MHLW + COOL:AIR + MOVOL:200V)	3X34
	0697 9811 13	1	PLUG	**(25/02/2019 - 16/12/2019)** CAPPRM:ASME + COOL:WATER + MOVOL:380V **(17/12/2019 - ...)** (CAPPRM:ASME + MOVOL:380V , CAPPRM:MHLW + COOL:AIR + MOVOL:200V)	
	Electrical legend:	Energy recovery			
	0989 3700 44	1	LOCKNUT	**(25/02/2019 - 16/12/2019)** CAPPRM:ASME + COOL:WATER + MOVOL:380V **(17/12/2019 - ...)** (CAPPRM:ASME + MOVOL:380V , CAPPRM:MHLW + COOL:AIR + MOVOL:200V)	
	Electrical legend:	Energy recovery			
	0697 9811 12	1	PLUG	**(25/02/2019 - 16/12/2019)** CAPPRM:ASME + COOL:WATER + MOVOL:380V **(17/12/2019 - ...)** (CAPPRM:ASME + MOVOL:380V , CAPPRM:MHLW + COOL:AIR + MOVOL:200V)	
	Electrical legend:	Control circuit of T10			
	0989 3700 43	1	NUT	**(25/02/2019 - 16/12/2019)** CAPPRM:ASME + COOL:WATER + MOVOL:380V **(17/12/2019 - ...)** (CAPPRM:ASME + MOVOL:380V , CAPPRM:MHLW + COOL:AIR + MOVOL:200V)	
	Electrical legend:	Control circuit of T10			
	0697 9811 10	1	PLUG	**(25/02/2019 - 16/12/2019)** CAPPRM:ASME + COOL:WATER + MOVOL:380V **(17/12/2019 - ...)** (CAPPRM:ASME + MOVOL:380V , CAPPRM:MHLW + COOL:AIR + MOVOL:200V)	
	Electrical legend:	Plug for smartbox hole			
	0989 3700 41	1	LOCKNUT	**(25/02/2019 - 16/12/2019)** CAPPRM:ASME + COOL:WATER + MOVOL:380V **(17/12/2019 - ...)** (CAPPRM:ASME + MOVOL:380V , CAPPRM:MHLW + COOL:AIR + MOVOL:200V)	
	Electrical legend:	Nut for smartbox hole			
	1089 9556 37	1	AIR INLET WITH FILTER	**(25/02/2019 - 16/12/2019)** CAPPRM:ASME + COOL:WATER + MOVOL:380V **(17/12/2019 - ...)** (CAPPRM:ASME + MOVOL:380V , CAPPRM:MHLW + COOL:AIR + MOVOL:200V)	Fan Filter

Legend:

CAPPRE:IEC - Component approval electrical:IEC
CAPPRM:ASME - Component approval mechanical:ASME
CAPPRM:MHLW - Component approval mechanical:MHLW
COOL:AIR - Cooling:Air cooled
COOL:WATER - Cooling:Water cooled
FREQ:60HZ - Frequency:60 Hz
IDRY:Y - Integrated dryer:Yes
MODEL:GA90VP_16 - Model:GA 90VSD+
MOVOL:200V - Supply voltage:200 V
MOVOL:380V - Supply voltage:380 V

21.23 - Cubicle components GA 110 VSD+ - (200V-380V-460V/60Hz - IEC, 230V-460V-575V/60Hz - UL-cUL, 200V-400V-500V/50Hz - IEC) - Pack (20/07/2017 - 11/12/2018)

((((CAPPRM:AS1210 , CAPPRM:CE , CAPPRM:MHLW , CAPPRM:MOM) + MOVOL:400V , CAPPRM:CE + COOL:AIR + MOVOL:500V) + FREQ:50HZ , ((MOVOL:380V , MOVOL:460V) + CAPPRM:ASME , CAPPRM:MHLW + MOVOL:460V) + FREQ:60HZ) + CAPPRE:IEC , (COOL:AIR + MOVOL:575V , MOVOL:460V) + CAPPRE:ULCUL + CAPPRM:ASME + FREQ:60HZ) + IDRY:N + MODEL:GA110VP_16

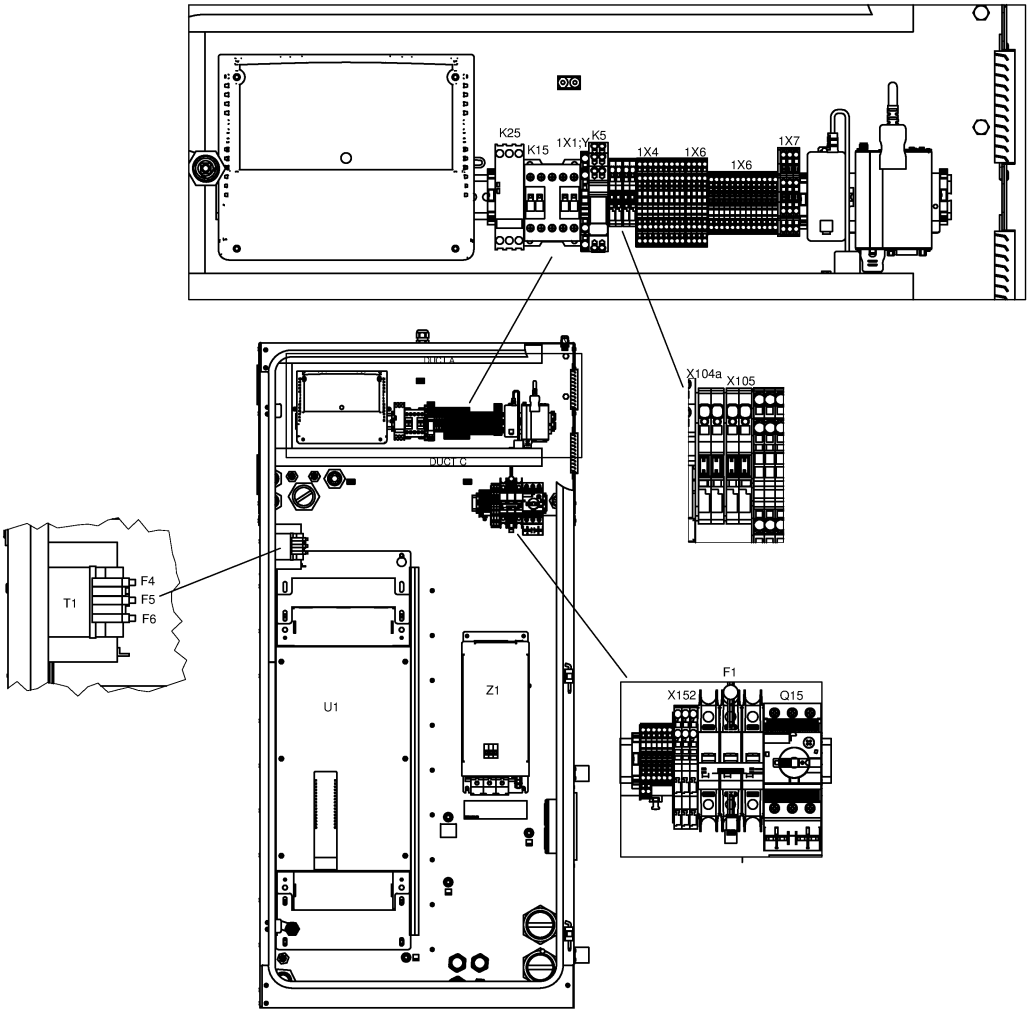

21.23 - Cubicle components GA 110 VSD+ - (200V-380V-460V/60Hz - IEC, 230V-460V-575V/60Hz - UL-cUL, 200V-400V-500V/50Hz - IEC) - Pack (20/07/2017 - 11/12/2018)

((((CAPPRM:AS1210 , CAPPRM:CE , CAPPRM:MHLW , CAPPRM:MOM) + MOVOL:400V , CAPPRM:CE + COOL:AIR + MOVOL:500V) + FREQ:50HZ , ((MOVOL:380V , MOVOL:460V) + CAPPRM:ASME , CAPPRM:MHLW + MOVOL:460V) + FREQ:60HZ) + CAPPRE:IEC , (COOL:AIR + MOVOL:575V , MOVOL:460V) + CAPPRE:ULCUL + CAPPRM:ASME + FREQ:60HZ) + IDRY:N + MODEL:GA110VP_16

Ref	Part Number	Qty	Name	Validity	EL
	1900 2202 13	1	CUBICLE	**(20/07/2017 - 11/12/2018)**	
	9820 3000 21	-	CUBICLE LAYOUT	**(20/07/2017 - 20/08/2018)** ((((CAPPRM:AS1210 , CAPPRM:CE , CAPPRM:MHLW , CAPPRM:MOM) + MOVOL:400V , CAPPRM:CE + MOVOL:500V , CAPPRM:MHLW + MOVOL:200V) + FREQ:50HZ , ((MOVOL:200V , MOVOL:460V) + CAPPRM:MHLW , (MOVOL:380V , MOVOL:460V) + CAPPRM:ASME) + FREQ:60HZ) + CAPPRE:IEC , (MOVOL:230V , MOVOL:460V , MOVOL:575V) + CAPPRE:ULCUL + CAPPRM:ASME + FREQ:60HZ) + COOL:AIR **(21/08/2018 - 11/12/2018)** ((((CAPPRM:AS1210 , CAPPRM:CE , CAPPRM:MHLW , CAPPRM:MOM) + MOVOL:400V , CAPPRM:CE + COOL:AIR + MOVOL:500V) + FREQ:50HZ , ((MOVOL:380V , MOVOL:460V) + CAPPRM:ASME , CAPPRM:MHLW + MOVOL:460V) + FREQ:60HZ , CAPPRM:MHLW + COOL:AIR + MOVOL:200V) + CAPPRE:IEC , ((MOVOL:230V , MOVOL:575V) + COOL:AIR , MOVOL:460V) + CAPPRE:ULCUL + CAPPRM:ASME + FREQ:60HZ)	-
	9820 3000 22	-	SERVICE DIAGRAM	**(20/07/2017 - 20/08/2018)** ((((CAPPRM:AS1210 , CAPPRM:CE , CAPPRM:MHLW , CAPPRM:MOM) + MOVOL:400V , CAPPRM:CE + MOVOL:500V , CAPPRM:MHLW + MOVOL:200V) + FREQ:50HZ , ((MOVOL:200V , MOVOL:460V) + CAPPRM:MHLW , (MOVOL:380V , MOVOL:460V) + CAPPRM:ASME) + FREQ:60HZ) + CAPPRE:IEC , (MOVOL:230V , MOVOL:460V , MOVOL:575V) + CAPPRE:ULCUL + CAPPRM:ASME + FREQ:60HZ) + COOL:AIR **(21/08/2018 - 11/12/2018)** ((((CAPPRM:AS1210 , CAPPRM:CE , CAPPRM:MHLW , CAPPRM:MOM) + MOVOL:400V , CAPPRM:CE + COOL:AIR + MOVOL:500V) + FREQ:50HZ , ((MOVOL:380V , MOVOL:460V) + CAPPRM:ASME , CAPPRM:MHLW + MOVOL:460V) + FREQ:60HZ , CAPPRM:MHLW + COOL:AIR + MOVOL:200V) + CAPPRE:IEC , ((MOVOL:230V , MOVOL:575V) + COOL:AIR , MOVOL:460V) + CAPPRE:ULCUL + CAPPRM:ASME + FREQ:60HZ)	-
	1622 3798 70	1	WIRE HARNESS COMM CABLE	**(20/07/2017 - 20/08/2018)** ((((CAPPRM:AS1210 , CAPPRM:CE , CAPPRM:MHLW , CAPPRM:MOM) + MOVOL:400V , CAPPRM:CE + MOVOL:500V , CAPPRM:MHLW + MOVOL:200V) + FREQ:50HZ , ((MOVOL:200V , MOVOL:460V) + CAPPRM:MHLW , (MOVOL:380V , MOVOL:460V) + CAPPRM:ASME) + FREQ:60HZ) + CAPPRE:IEC , (MOVOL:230V , MOVOL:460V , MOVOL:575V) + CAPPRE:ULCUL + CAPPRM:ASME + FREQ:60HZ) + COOL:AIR **(21/08/2018 - 11/12/2018)** ((((CAPPRM:AS1210 , CAPPRM:CE , CAPPRM:MHLW , CAPPRM:MOM) + MOVOL:400V , CAPPRM:CE + COOL:AIR + MOVOL:500V) + FREQ:50HZ , ((MOVOL:380V , MOVOL:460V) + CAPPRM:ASME , CAPPRM:MHLW + MOVOL:460V) + FREQ:60HZ , CAPPRM:MHLW + COOL:AIR + MOVOL:200V) + CAPPRE:IEC , ((MOVOL:230V , MOVOL:575V) + COOL:AIR , MOVOL:460V) + CAPPRE:ULCUL + CAPPRM:ASME + FREQ:60HZ)	-

Legend:

CAPPRE:IEC - Component approval electrical:IEC
CAPPRE:ULCUL - Component approval electrical:UL/cUL
CAPPRM:AS1210 - Component approval mechanical:AS1210
CAPPRM:ASME - Component approval mechanical:ASME
CAPPRM:CE - Component approval mechanical:CE
CAPPRM:MHLW - Component approval mechanical:MHLW
CAPPRM:MOM - Component approval mechanical:MOM
COOL:AIR - Cooling:Air cooled
FREQ:50HZ - Frequency:50 Hz
FREQ:60HZ - Frequency:60 Hz
IDRY:N - Integrated dryer:No
MODEL:GA110VP_16 - Model:GA 110VSD+
MOVOL:200V - Supply voltage:200 V
MOVOL:230V - Supply voltage:230 V
MOVOL:380V - Supply voltage:380 V
MOVOL:400V - Supply voltage:400 V
MOVOL:460V - Supply voltage:460 V
MOVOL:500V - Supply voltage:500 V
MOVOL:575V - Supply voltage:575 V

21.23 - Cubicle components GA 110 VSD+ - (200V-380V-460V/60Hz - IEC, 230V-460V-575V/60Hz - UL-cUL, 200V-400V-500V/50Hz - IEC) - Pack (20/07/2017 - 11/12/2018)

((((CAPPRM:AS1210 , CAPPRM:CE , CAPPRM:MHLW , CAPPRM:MOM) + MOVOL:400V , CAPPRM:CE + COOL:AIR + MOVOL:500V) + FREQ:50HZ , ((MOVOL:380V , MOVOL:460V) + CAPPRM:ASME , CAPPRM:MHLW + MOVOL:460V) + FREQ:60HZ) + CAPPRE:IEC , (COOL:AIR + MOVOL:575V , MOVOL:460V) + CAPPRE:ULCUL + CAPPRM:ASME + FREQ:60HZ) + IDRY:N + MODEL:GA110VP_16

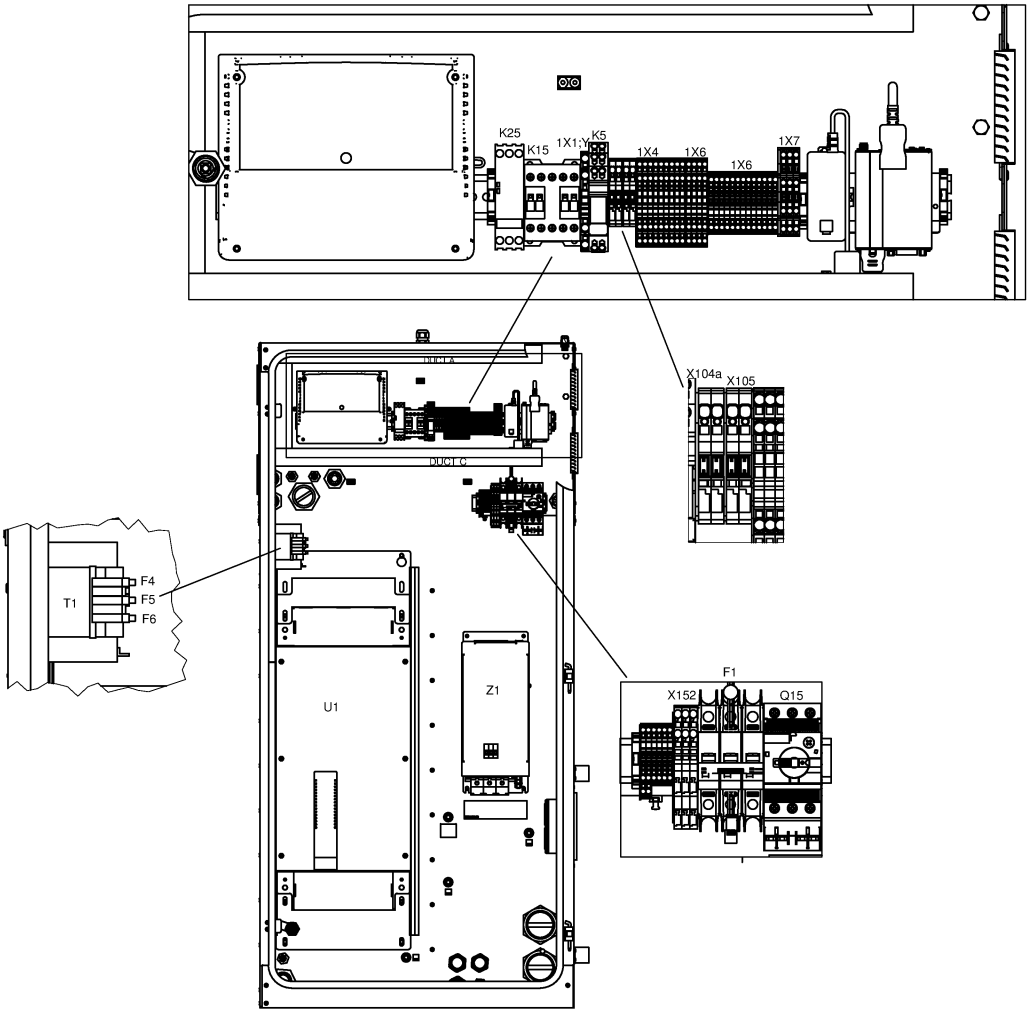

21.23 - Cubicle components GA 110 VSD+ - (200V-380V-460V/60Hz - IEC, 230V-460V-575V/60Hz - UL-cUL, 200V-400V-500V/50Hz - IEC) - Pack (20/07/2017 - 11/12/2018)

((((CAPPRM:AS1210 , CAPPRM:CE , CAPPRM:MHLW , CAPPRM:MOM) + MOVOL:400V , CAPPRM:CE + COOL:AIR + MOVOL:500V) + FREQ:50HZ , ((MOVOL:380V , MOVOL:460V) + CAPPRM:ASME , CAPPRM:MHLW + MOVOL:460V) + FREQ:60HZ) + CAPPRE:IEC , (COOL:AIR + MOVOL:575V , MOVOL:460V) + CAPPRE:ULCUL + CAPPRM:ASME + FREQ:60HZ) + IDRY:N + MODEL:GA110VP_16

Ref	Part Number	Qty	Name	Validity	EL
	1622 5099 04	1	COMMUNICATION CABLE	**(20/07/2017 - 20/08/2018)** ((((CAPPRM:AS1210 , CAPPRM:CE , CAPPRM:MHLW , CAPPRM:MOM) + MOVOL:400V , CAPPRM:CE + MOVOL:500V , CAPPRM:MHLW + MOVOL:200V) + FREQ:50HZ , ((MOVOL:200V , MOVOL:460V) + CAPPRM:MHLW , (MOVOL:380V , MOVOL:460V) + CAPPRM:ASME) + FREQ:60HZ) + CAPPRE:IEC , (MOVOL:230V , MOVOL:460V , MOVOL:575V) + CAPPRE:ULCUL + CAPPRM:ASME + FREQ:60HZ) + COOL:AIR **(21/08/2018 - 11/12/2018)** ((((CAPPRM:AS1210 , CAPPRM:CE , CAPPRM:MHLW , CAPPRM:MOM) + MOVOL:400V , CAPPRM:CE + COOL:AIR + MOVOL:500V) + FREQ:50HZ , ((MOVOL:380V , MOVOL:460V) + CAPPRM:ASME , CAPPRM:MHLW + MOVOL:460V) + FREQ:60HZ , CAPPRM:MHLW + COOL:AIR + MOVOL:200V) + CAPPRE:IEC , ((MOVOL:230V , MOVOL:575V) + COOL:AIR , MOVOL:460V) + CAPPRE:ULCUL + CAPPRM:ASME + FREQ:60HZ)	
Electrical legend:	Comm Cable Loose supply				
	1649 8001 22	1	CUBICLE	**(20/07/2017 - 20/08/2018)** ((((CAPPRM:AS1210 , CAPPRM:CE , CAPPRM:MHLW , CAPPRM:MOM) + MOVOL:400V , CAPPRM:CE + MOVOL:500V , CAPPRM:MHLW + MOVOL:200V) + FREQ:50HZ , ((MOVOL:200V , MOVOL:460V) + CAPPRM:MHLW , (MOVOL:380V , MOVOL:460V) + CAPPRM:ASME) + FREQ:60HZ) + CAPPRE:IEC , (MOVOL:230V , MOVOL:460V , MOVOL:575V) + CAPPRE:ULCUL + CAPPRM:ASME + FREQ:60HZ) + COOL:AIR **(21/08/2018 - 11/12/2018)** ((((CAPPRM:AS1210 , CAPPRM:CE , CAPPRM:MHLW , CAPPRM:MOM) + MOVOL:400V , CAPPRM:CE + COOL:AIR + MOVOL:500V) + FREQ:50HZ , ((MOVOL:380V , MOVOL:460V) + CAPPRM:ASME , CAPPRM:MHLW + MOVOL:460V) + FREQ:60HZ , CAPPRM:MHLW + COOL:AIR + MOVOL:200V) + CAPPRE:IEC , ((MOVOL:230V , MOVOL:575V) + COOL:AIR , MOVOL:460V) + CAPPRE:ULCUL + CAPPRM:ASME + FREQ:60HZ)	-
•	1202 6584 02	AR	SEAL		-
	1649 8001 31	1	PLATE NEOS "E"	**(20/07/2017 - 20/08/2018)** ((((CAPPRM:AS1210 , CAPPRM:CE , CAPPRM:MHLW , CAPPRM:MOM) + MOVOL:400V , CAPPRM:CE + MOVOL:500V , CAPPRM:MHLW + MOVOL:200V) + FREQ:50HZ , ((MOVOL:200V , MOVOL:460V) + CAPPRM:MHLW , (MOVOL:380V , MOVOL:460V) + CAPPRM:ASME) + FREQ:60HZ) + CAPPRE:IEC , (MOVOL:230V , MOVOL:460V , MOVOL:575V) + CAPPRE:ULCUL + CAPPRM:ASME + FREQ:60HZ) + COOL:AIR **(21/08/2018 - 11/12/2018)** ((((CAPPRM:AS1210 , CAPPRM:CE , CAPPRM:MHLW , CAPPRM:MOM) + MOVOL:400V , CAPPRM:CE + COOL:AIR + MOVOL:500V) + FREQ:50HZ , ((MOVOL:380V , MOVOL:460V) + CAPPRM:ASME , CAPPRM:MHLW + MOVOL:460V) + FREQ:60HZ , CAPPRM:MHLW + COOL:AIR + MOVOL:200V) + CAPPRE:IEC , ((MOVOL:230V , MOVOL:575V) + COOL:AIR , MOVOL:460V) + CAPPRE:ULCUL + CAPPRM:ASME + FREQ:60HZ)	-

Legend:

CAPPRE:IEC - Component approval electrical:IEC
CAPPRM:ASME - Component approval mechanical:ASME
CAPPRM:MOM - Component approval mechanical:MOM
FREQ:60HZ - Frequency:60 Hz
MOVOL:200V - Supply voltage:200 V
MOVOL:400V - Supply voltage:400 V
MOVOL:575V - Supply voltage:575 V
CAPPRE:ULCUL - Component approval electrical:UL/cUL
CAPPRM:CE - Component approval mechanical:CE
COOL:AIR - Cooling:Air cooled
IDRY:N - Integrated dryer:No
MOVOL:230V - Supply voltage:230 V
MOVOL:460V - Supply voltage:460 V
CAPPRM:AS1210 - Component approval mechanical:AS1210
CAPPRM:MHLW - Component approval mechanical:MHLW
FREQ:50HZ - Frequency:50 Hz
MODEL:GA110VP_16 - Model:GA 110VSD+
MOVOL:380V - Supply voltage:380 V
MOVOL:500V - Supply voltage:500 V

21.23 - Cubicle components GA 110 VSD+ - (200V-380V-460V/60Hz - IEC, 230V-460V-575V/60Hz - UL-cUL, 200V-400V-500V/50Hz - IEC) - Pack (20/07/2017 - 11/12/2018)

((((CAPPRM:AS1210 , CAPPRM:CE , CAPPRM:MHLW , CAPPRM:MOM) + MOVOL:400V , CAPPRM:CE + COOL:AIR + MOVOL:500V) + FREQ:50HZ , ((MOVOL:380V , MOVOL:460V) + CAPPRM:ASME , CAPPRM:MHLW + MOVOL:460V) + FREQ:60HZ) + CAPPRE:IEC , (COOL:AIR + MOVOL:575V , MOVOL:460V) + CAPPRE:ULCUL + CAPPRM:ASME + FREQ:60HZ) + IDRY:N + MODEL:GA110VP_16

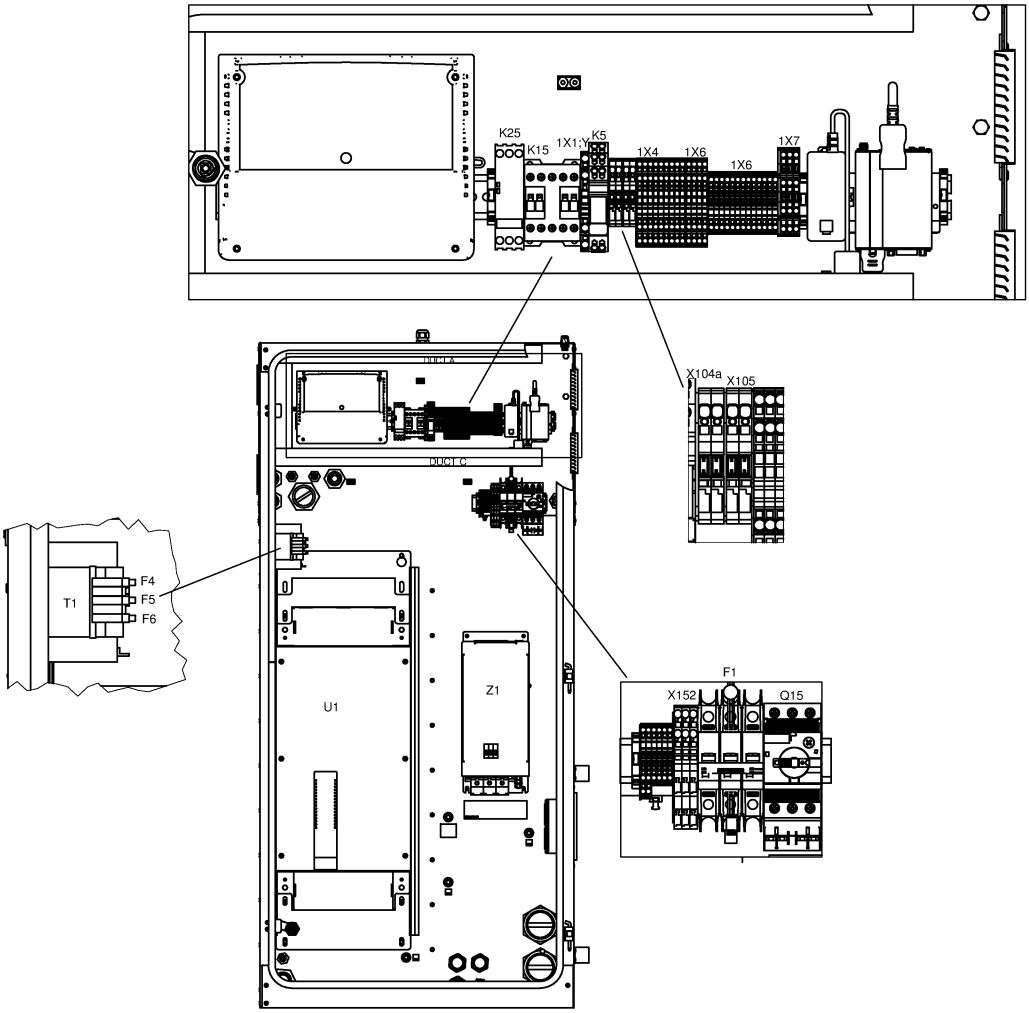

21.23 - Cubicle components GA 110 VSD+ - (200V-380V-460V/60Hz - IEC, 230V-460V-575V/60Hz - UL-cUL, 200V-400V-500V/50Hz - IEC) - Pack (20/07/2017 - 11/12/2018)

((((CAPPRM:AS1210 , CAPPRM:CE , CAPPRM:MHLW , CAPPRM:MOM) + MOVOL:400V , CAPPRM:CE + COOL:AIR + MOVOL:500V) + FREQ:50HZ , ((MOVOL:380V , MOVOL:460V) + CAPPRM:ASME , CAPPRM:MHLW + MOVOL:460V) + FREQ:60HZ) + CAPPRE:IEC , (COOL:AIR + MOVOL:575V , MOVOL:460V) + CAPPRE:ULCUL + CAPPRM:ASME + FREQ:60HZ) + IDRY:N + MODEL:GA110VP_16

Ref	Part Number	Qty	Name	Validity	EL
	1649 8003 85	1	MOUNTING PLATE	**(20/07/2017 - 20/08/2018)** ((((CAPPRM:AS1210 , CAPPRM:CE , CAPPRM:MHLW , CAPPRM:MOM) + MOVOL:400V , CAPPRM:CE + MOVOL:500V , CAPPRM:MHLW + MOVOL:200V) + FREQ:50HZ , ((MOVOL:200V , MOVOL:460V) + CAPPRM:MHLW , (MOVOL:380V , MOVOL:460V) + CAPPRM:ASME) + FREQ:60HZ) + CAPPRE:IEC , (MOVOL:230V , MOVOL:460V , MOVOL:575V) + CAPPRE:ULCUL + CAPPRM:ASME + FREQ:60HZ) + COOL:AIR **(21/08/2018 - 11/12/2018)** ((((CAPPRM:AS1210 , CAPPRM:CE , CAPPRM:MHLW , CAPPRM:MOM) + MOVOL:400V , CAPPRM:CE + COOL:AIR + MOVOL:500V) + FREQ:50HZ , ((MOVOL:380V , MOVOL:460V) + CAPPRM:ASME , CAPPRM:MHLW + MOVOL:460V) + FREQ:60HZ , CAPPRM:MHLW + COOL:AIR + MOVOL:200V) + CAPPRE:IEC , ((MOVOL:230V , MOVOL:575V) + COOL:AIR , MOVOL:460V) + CAPPRE:ULCUL + CAPPRM:ASME + FREQ:60HZ)	
	1649 8002 39	1	WIRE HARNESS	**(20/07/2017 - 20/08/2018)** ((((CAPPRM:AS1210 , CAPPRM:CE , CAPPRM:MHLW , CAPPRM:MOM) + MOVOL:400V , CAPPRM:CE + MOVOL:500V , CAPPRM:MHLW + MOVOL:200V) + FREQ:50HZ , ((MOVOL:200V , MOVOL:460V) + CAPPRM:MHLW , (MOVOL:380V , MOVOL:460V) + CAPPRM:ASME) + FREQ:60HZ) + CAPPRE:IEC , (MOVOL:230V , MOVOL:460V , MOVOL:575V) + CAPPRE:ULCUL + CAPPRM:ASME + FREQ:60HZ) + COOL:AIR **(21/08/2018 - 11/12/2018)** ((((CAPPRM:AS1210 , CAPPRM:CE , CAPPRM:MHLW , CAPPRM:MOM) + MOVOL:400V , CAPPRM:CE + COOL:AIR + MOVOL:500V) + FREQ:50HZ , ((MOVOL:380V , MOVOL:460V) + CAPPRM:ASME , CAPPRM:MHLW + MOVOL:460V) + FREQ:60HZ , CAPPRM:MHLW + COOL:AIR + MOVOL:200V) + CAPPRE:IEC , ((MOVOL:230V , MOVOL:575V) + COOL:AIR , MOVOL:460V) + CAPPRE:ULCUL + CAPPRM:ASME + FREQ:60HZ)	
	Electrical legend:		Pressure switch (vessel) + pressure sensor vessel + pressure sensor outlet		
•	0698 5140 74	1	CABLE GLAND		
	1649 8002 40	1	WIRE HARNESS	**(20/07/2017 - 20/08/2018)** ((((CAPPRM:AS1210 , CAPPRM:CE , CAPPRM:MHLW , CAPPRM:MOM) + MOVOL:400V , CAPPRM:CE + MOVOL:500V , CAPPRM:MHLW + MOVOL:200V) + FREQ:50HZ , ((MOVOL:200V , MOVOL:460V) + CAPPRM:MHLW , (MOVOL:380V , MOVOL:460V) + CAPPRM:ASME) + FREQ:60HZ) + CAPPRE:IEC , (MOVOL:230V , MOVOL:460V , MOVOL:575V) + CAPPRE:ULCUL + CAPPRM:ASME + FREQ:60HZ) + COOL:AIR **(21/08/2018 - 11/12/2018)** ((((CAPPRM:AS1210 , CAPPRM:CE , CAPPRM:MHLW , CAPPRM:MOM) + MOVOL:400V , CAPPRM:CE + COOL:AIR + MOVOL:500V) + FREQ:50HZ , ((MOVOL:380V , MOVOL:460V) + CAPPRM:ASME , CAPPRM:MHLW + MOVOL:460V) + FREQ:60HZ , CAPPRM:MHLW + COOL:AIR + MOVOL:200V) + CAPPRE:IEC , ((MOVOL:230V , MOVOL:575V) + COOL:AIR , MOVOL:460V) + CAPPRE:ULCUL + CAPPRM:ASME + FREQ:60HZ)	
	Electrical legend:		Temperature switch element outlet + solenoids + ambient sensor		
•	0698 5140 74	1	CABLE GLAND		

Legend:

CAPPRE:IEC - Component approval electrical:IEC
CAPPRE:ULCUL - Component approval electrical:UL/cUL
CAPPRM:AS1210 - Component approval mechanical:AS1210
CAPPRM:ASME - Component approval mechanical:ASME
CAPPRM:CE - Component approval mechanical:CE
CAPPRM:MHLW - Component approval mechanical:MHLW
CAPPRM:MOM - Component approval mechanical:MOM
COOL:AIR - Cooling:Air cooled
FREQ:50HZ - Frequency:50 Hz
FREQ:60HZ - Frequency:60 Hz
IDRY:N - Integrated dryer:No
MODEL:GA110VP_16 - Model:GA 110VSD+
MOVOL:200V - Supply voltage:200 V
MOVOL:230V - Supply voltage:230 V
MOVOL:380V - Supply voltage:380 V
MOVOL:400V - Supply voltage:400 V
MOVOL:460V - Supply voltage:460 V
MOVOL:500V - Supply voltage:500 V
MOVOL:575V - Supply voltage:575 V

21.23 - Cubicle components GA 110 VSD+ - (200V-380V-460V/60Hz - IEC, 230V-460V-575V/60Hz - UL-cUL, 200V-400V-500V/50Hz - IEC) - Pack (20/07/2017 - 11/12/2018)

((((CAPPRM:AS1210 , CAPPRM:CE , CAPPRM:MHLW , CAPPRM:MOM) + MOVOL:400V , CAPPRM:CE + COOL:AIR + MOVOL:500V) + FREQ:50HZ , ((MOVOL:380V , MOVOL:460V) + CAPPRM:ASME , CAPPRM:MHLW + MOVOL:460V) + FREQ:60HZ) + CAPPRE:IEC , (COOL:AIR + MOVOL:575V , MOVOL:460V) + CAPPRE:ULCUL + CAPPRM:ASME + FREQ:60HZ) + IDRY:N + MODEL:GA110VP_16

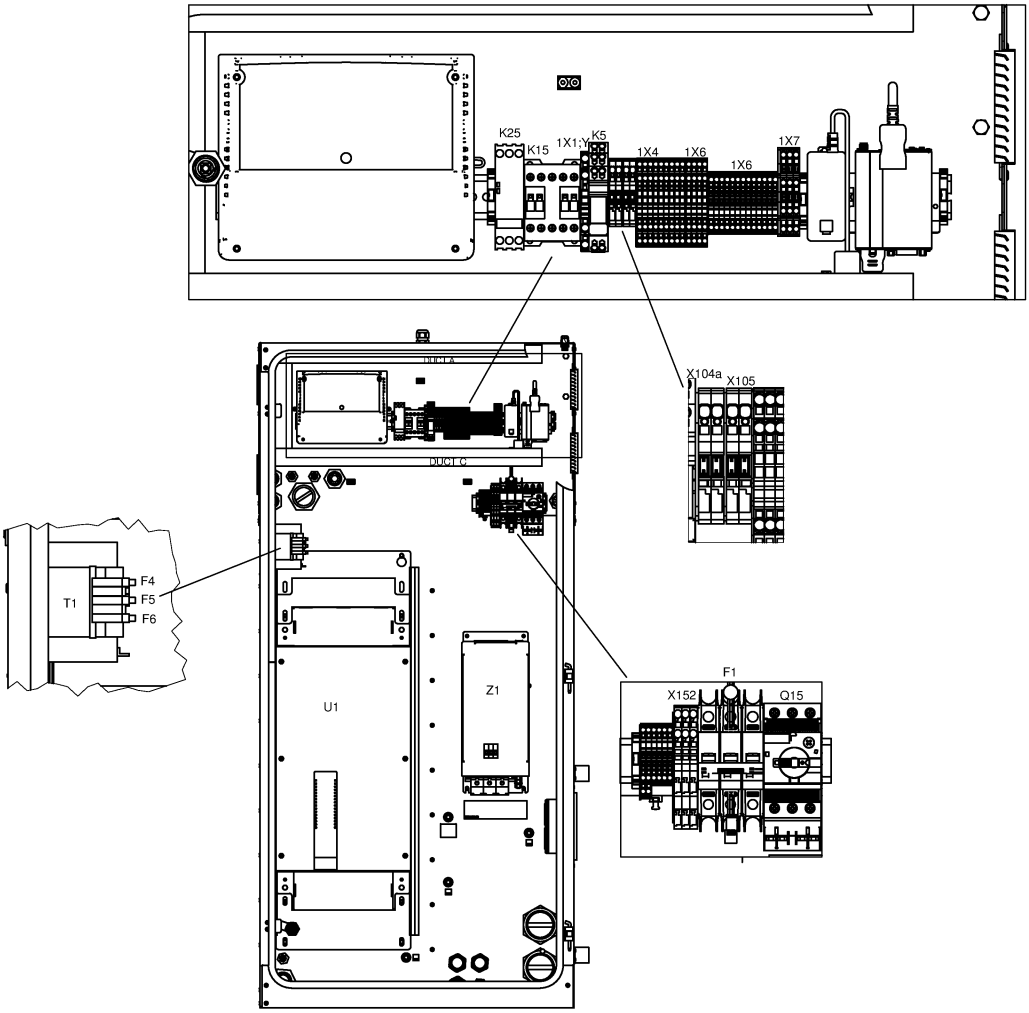

Ref	Part Number	Qty	Name	Validity	EL
	1649 8002 73	1	WIRE HARNESS	**(20/07/2017 - 20/08/2018)** ((((CAPPRM:AS1210 , CAPPRM:CE , CAPPRM:MHLW , CAPPRM:MOM) + MOVOL:400V , CAPPRM:CE + MOVOL:500V , CAPPRM:MHLW + MOVOL:200V) + FREQ:50HZ , ((MOVOL:200V , MOVOL:460V) + CAPPRM:MHLW , (MOVOL:380V , MOVOL:460V) + CAPPRM:ASME) + FREQ:60HZ) + CAPPRE:IEC , (MOVOL:230V , MOVOL:460V , MOVOL:575V) + CAPPRE:ULCUL + CAPPRM:ASME + FREQ:60HZ) + COOL:AIR **(21/08/2018 - 11/12/2018)** ((((CAPPRM:AS1210 , CAPPRM:CE , CAPPRM:MHLW , CAPPRM:MOM) + MOVOL:400V , CAPPRM:CE + COOL:AIR + MOVOL:500V) + FREQ:50HZ , ((MOVOL:380V , MOVOL:460V) + CAPPRM:ASME , CAPPRM:MHLW + MOVOL:460V) + FREQ:60HZ , CAPPRM:MHLW + COOL:AIR + MOVOL:200V) + CAPPRE:IEC , ((MOVOL:230V , MOVOL:575V) + COOL:AIR , MOVOL:460V) + CAPPRE:ULCUL + CAPPRM:ASME + FREQ:60HZ)	
	Electrical legend:	Pack Drain + Air filter switch			
•	0698 5140 74	1	CABLE GLAND		
	1649 8002 75	1	WIRE HARNESS	**(20/07/2017 - 20/08/2018)** ((((CAPPRM:AS1210 , CAPPRM:CE , CAPPRM:MHLW , CAPPRM:MOM) + MOVOL:400V , CAPPRM:CE + MOVOL:500V , CAPPRM:MHLW + MOVOL:200V) + FREQ:50HZ , ((MOVOL:200V , MOVOL:460V) + CAPPRM:MHLW , (MOVOL:380V , MOVOL:460V) + CAPPRM:ASME) + FREQ:60HZ) + CAPPRE:IEC , (MOVOL:230V , MOVOL:460V , MOVOL:575V) + CAPPRE:ULCUL + CAPPRM:ASME + FREQ:60HZ) + COOL:AIR **(21/08/2018 - 11/12/2018)** ((((CAPPRM:AS1210 , CAPPRM:CE , CAPPRM:MHLW , CAPPRM:MOM) + MOVOL:400V , CAPPRM:CE + COOL:AIR + MOVOL:500V) + FREQ:50HZ , ((MOVOL:380V , MOVOL:460V) + CAPPRM:ASME , CAPPRM:MHLW + MOVOL:460V) + FREQ:60HZ , CAPPRM:MHLW + COOL:AIR + MOVOL:200V) + CAPPRE:IEC , ((MOVOL:230V , MOVOL:575V) + COOL:AIR , MOVOL:460V) + CAPPRE:ULCUL + CAPPRM:ASME + FREQ:60HZ)	
	Electrical legend:	Relative Humidity sensor			
•	~~1089 9320 09~~	1	RH SENSOR		
	Substituted by:	1089 9320 10 - TEMP. SENSOR (quantity: 1)			
•	0698 5140 75	1	CABLE GLAND		
	1649 8001 43	3	MOTOR CABLE	**(20/07/2017 - 20/08/2018)** ((((CAPPRM:AS1210 , CAPPRM:CE , CAPPRM:MHLW , CAPPRM:MOM) + MOVOL:400V , CAPPRM:CE + MOVOL:500V , CAPPRM:MHLW + MOVOL:200V) + FREQ:50HZ , ((MOVOL:200V , MOVOL:460V) + CAPPRM:MHLW , (MOVOL:380V , MOVOL:460V) + CAPPRM:ASME) + FREQ:60HZ) + CAPPRE:IEC , (MOVOL:230V , MOVOL:460V , MOVOL:575V) + CAPPRE:ULCUL + CAPPRM:ASME + FREQ:60HZ) + COOL:AIR **(21/08/2018 - 11/12/2018)** ((((CAPPRM:AS1210 , CAPPRM:CE , CAPPRM:MHLW , CAPPRM:MOM) + MOVOL:400V , CAPPRM:CE + COOL:AIR + MOVOL:500V) + FREQ:50HZ , ((MOVOL:380V , MOVOL:460V) + CAPPRM:ASME , CAPPRM:MHLW + MOVOL:460V) + FREQ:60HZ , CAPPRM:MHLW + COOL:AIR + MOVOL:200V) + CAPPRE:IEC , ((MOVOL:230V , MOVOL:575V) + COOL:AIR , MOVOL:460V) + CAPPRE:ULCUL + CAPPRM:ASME + FREQ:60HZ)	

Legend:

CAPPRE:IEC - Component approval electrical:IEC
CAPPRE:ULCUL - Component approval electrical:UL/cUL
CAPPRM:AS1210 - Component approval mechanical:AS1210
CAPPRM:ASME - Component approval mechanical:ASME
CAPPRM:CE - Component approval mechanical:CE
CAPPRM:MHLW - Component approval mechanical:MHLW
CAPPRM:MOM - Component approval mechanical:MOM
COOL:AIR - Cooling:Air cooled
FREQ:50HZ - Frequency:50 Hz
FREQ:60HZ - Frequency:60 Hz
IDRY:N - Integrated dryer:No
MODEL:GA110VP_16 - Model:GA 110VSD+
MOVOL:200V - Supply voltage:200 V
MOVOL:230V - Supply voltage:230 V
MOVOL:380V - Supply voltage:380 V
MOVOL:400V - Supply voltage:400 V
MOVOL:460V - Supply voltage:460 V
MOVOL:500V - Supply voltage:500 V
MOVOL:575V - Supply voltage:575 V

21.23 - Cubicle components GA 110 VSD+ - (200V-380V-460V/60Hz - IEC, 230V-460V-575V/60Hz - UL-cUL, 200V-400V-500V/50Hz - IEC) - Pack (20/07/2017 - 11/12/2018)

((((CAPPRM:AS1210 , CAPPRM:CE , CAPPRM:MHLW , CAPPRM:MOM) + MOVOL:400V , CAPPRM:CE + COOL:AIR + MOVOL:500V) + FREQ:50HZ , ((MOVOL:380V , MOVOL:460V) + CAPPRM:ASME , CAPPRM:MHLW + MOVOL:460V) + FREQ:60HZ) + CAPPRE:IEC , (COOL:AIR + MOVOL:575V , MOVOL:460V) + CAPPRE:ULCUL + CAPPRM:ASME + FREQ:60HZ) + IDRY:N + MODEL:GA110VP_16

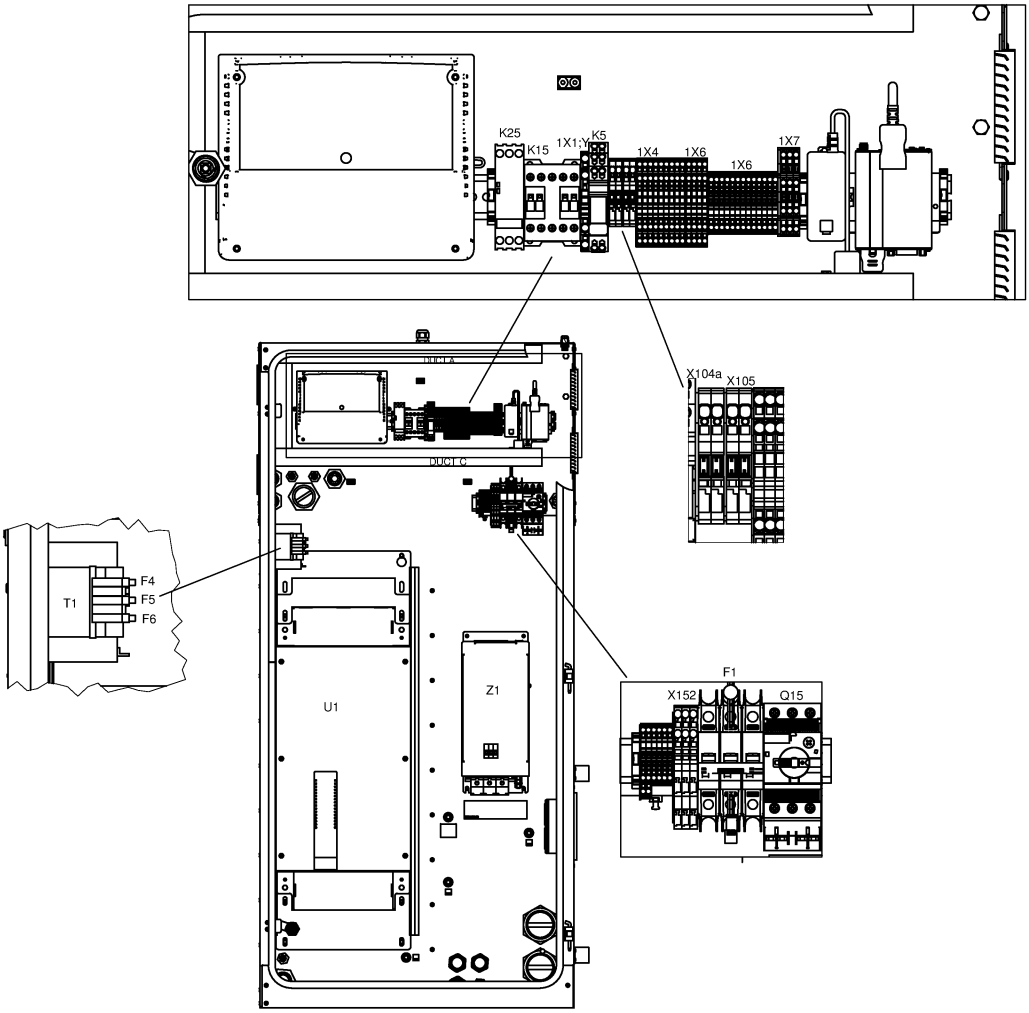

Ref	Part Number	Qty	Name	Validity	EL
	1649 8001 46	1	MOTOR CABLE	**(20/07/2017 - 20/08/2018)** ((((CAPPRM:AS1210 , CAPPRM:CE , CAPPRM:MHLW , CAPPRM:MOM) + MOVOL:400V , CAPPRM:CE + MOVOL:500V , CAPPRM:MHLW + MOVOL:200V) + FREQ:50HZ , ((MOVOL:200V , MOVOL:460V) + CAPPRM:MHLW , (MOVOL:380V , MOVOL:460V) + CAPPRM:ASME) + FREQ:60HZ) + CAPPRE:IEC , (MOVOL:230V , MOVOL:460V , MOVOL:575V) + CAPPRE:ULCUL + CAPPRM:ASME + FREQ:60HZ) + COOL:AIR **(21/08/2018 - 11/12/2018)** ((((CAPPRM:AS1210 , CAPPRM:CE , CAPPRM:MHLW , CAPPRM:MOM) + MOVOL:400V , CAPPRM:CE + COOL:AIR + MOVOL:500V) + FREQ:50HZ , ((MOVOL:380V , MOVOL:460V) + CAPPRM:ASME , CAPPRM:MHLW + MOVOL:460V) + FREQ:60HZ , CAPPRM:MHLW + COOL:AIR + MOVOL:200V) + CAPPRE:IEC , ((MOVOL:230V , MOVOL:575V) + COOL:AIR , MOVOL:460V) + CAPPRE:ULCUL + CAPPRM:ASME + FREQ:60HZ)	-
		1	DATA LABEL	**(02/02/2018 - 20/08/2018)** ((((CAPPRM:AS1210 , CAPPRM:CE , CAPPRM:MHLW , CAPPRM:MOM) + MOVOL:400V , CAPPRM:CE + MOVOL:500V , CAPPRM:MHLW + MOVOL:200V) + FREQ:50HZ , ((MOVOL:200V , MOVOL:460V) + CAPPRM:MHLW , (MOVOL:380V , MOVOL:460V) + CAPPRM:ASME) + FREQ:60HZ) + CAPPRE:IEC , (MOVOL:230V , MOVOL:460V , MOVOL:575V) + CAPPRE:ULCUL + CAPPRM:ASME + FREQ:60HZ) + COOL:AIR **(21/08/2018 - 11/12/2018)** ((((CAPPRM:AS1210 , CAPPRM:CE , CAPPRM:MHLW , CAPPRM:MOM) + MOVOL:400V , CAPPRM:CE + COOL:AIR + MOVOL:500V) + FREQ:50HZ , ((MOVOL:380V , MOVOL:460V) + CAPPRM:ASME , CAPPRM:MHLW + MOVOL:460V) + FREQ:60HZ , CAPPRM:MHLW + COOL:AIR + MOVOL:200V) + CAPPRE:IEC , ((MOVOL:230V , MOVOL:575V) + COOL:AIR , MOVOL:460V) + CAPPRE:ULCUL + CAPPRM:ASME + FREQ:60HZ)	-
		1	DATA LABEL	**(20/07/2017 - 01/02/2018)** ((((CAPPRM:AS1210 , CAPPRM:CE , CAPPRM:MHLW , CAPPRM:MOM) + MOVOL:400V , CAPPRM:CE + MOVOL:500V , CAPPRM:MHLW + MOVOL:200V) + FREQ:50HZ , ((MOVOL:200V , MOVOL:460V) + CAPPRM:MHLW , (MOVOL:380V , MOVOL:460V) + CAPPRM:ASME) + FREQ:60HZ) + CAPPRE:IEC , (MOVOL:230V , MOVOL:460V , MOVOL:575V) + CAPPRE:ULCUL + CAPPRM:ASME + FREQ:60HZ) + COOL:AIR	
	1079 9901 68	1	WARNING LABEL	**(20/07/2017 - 20/08/2018)** ((((CAPPRM:AS1210 , CAPPRM:CE , CAPPRM:MHLW , CAPPRM:MOM) + MOVOL:400V , CAPPRM:CE + MOVOL:500V , CAPPRM:MHLW + MOVOL:200V) + FREQ:50HZ , ((MOVOL:200V , MOVOL:460V) + CAPPRM:MHLW , (MOVOL:380V , MOVOL:460V) + CAPPRM:ASME) + FREQ:60HZ) + CAPPRE:IEC , (MOVOL:230V , MOVOL:460V , MOVOL:575V) + CAPPRE:ULCUL + CAPPRM:ASME + FREQ:60HZ) + COOL:AIR **(21/08/2018 - 11/12/2018)** ((((CAPPRM:AS1210 , CAPPRM:CE , CAPPRM:MHLW , CAPPRM:MOM) + MOVOL:400V , CAPPRM:CE + COOL:AIR + MOVOL:500V) + FREQ:50HZ , ((MOVOL:380V , MOVOL:460V) + CAPPRM:ASME , CAPPRM:MHLW + MOVOL:460V) + FREQ:60HZ , CAPPRM:MHLW + COOL:AIR + MOVOL:200V) + CAPPRE:IEC , ((MOVOL:230V , MOVOL:575V) + COOL:AIR , MOVOL:460V) + CAPPRE:ULCUL + CAPPRM:ASME + FREQ:60HZ)	-

Legend:

CAPPRE:IEC - Component approval electrical:IEC
CAPPRM:ASME - Component approval mechanical:ASME
CAPPRM:MOM - Component approval mechanical:MOM
FREQ:60HZ - Frequency:60 Hz
MOVOL:200V - Supply voltage:200 V
MOVOL:400V - Supply voltage:400 V
MOVOL:575V - Supply voltage:575 V
CAPPRE:ULCUL - Component approval electrical:UL/cUL
CAPPRM:CE - Component approval mechanical:CE
COOL:AIR - Cooling:Air cooled
IDRY:N - Integrated dryer:No
MOVOL:230V - Supply voltage:230 V
MOVOL:460V - Supply voltage:460 V
CAPPRM:AS1210 - Component approval mechanical:AS1210
CAPPRM:MHLW - Component approval mechanical:MHLW
FREQ:50HZ - Frequency:50 Hz
MODEL:GA110VP_16 - Model:GA 110VSD+
MOVOL:380V - Supply voltage:380 V
MOVOL:500V - Supply voltage:500 V

21.23 - Cubicle components GA 110 VSD+ - (200V-380V-460V/60Hz - IEC, 230V-460V-575V/60Hz - UL-cUL, 200V-400V-500V/50Hz - IEC) - Pack (20/07/2017 - 11/12/2018)

((((CAPPRM:AS1210 , CAPPRM:CE , CAPPRM:MHLW , CAPPRM:MOM) + MOVOL:400V , CAPPRM:CE + COOL:AIR + MOVOL:500V) + FREQ:50HZ , ((MOVOL:380V , MOVOL:460V) + CAPPRM:ASME , CAPPRM:MHLW + MOVOL:460V) + FREQ:60HZ) + CAPPRE:IEC , (COOL:AIR + MOVOL:575V , MOVOL:460V) + CAPPRE:ULCUL + CAPPRM:ASME + FREQ:60HZ) + IDRY:N + MODEL:GA110VP_16

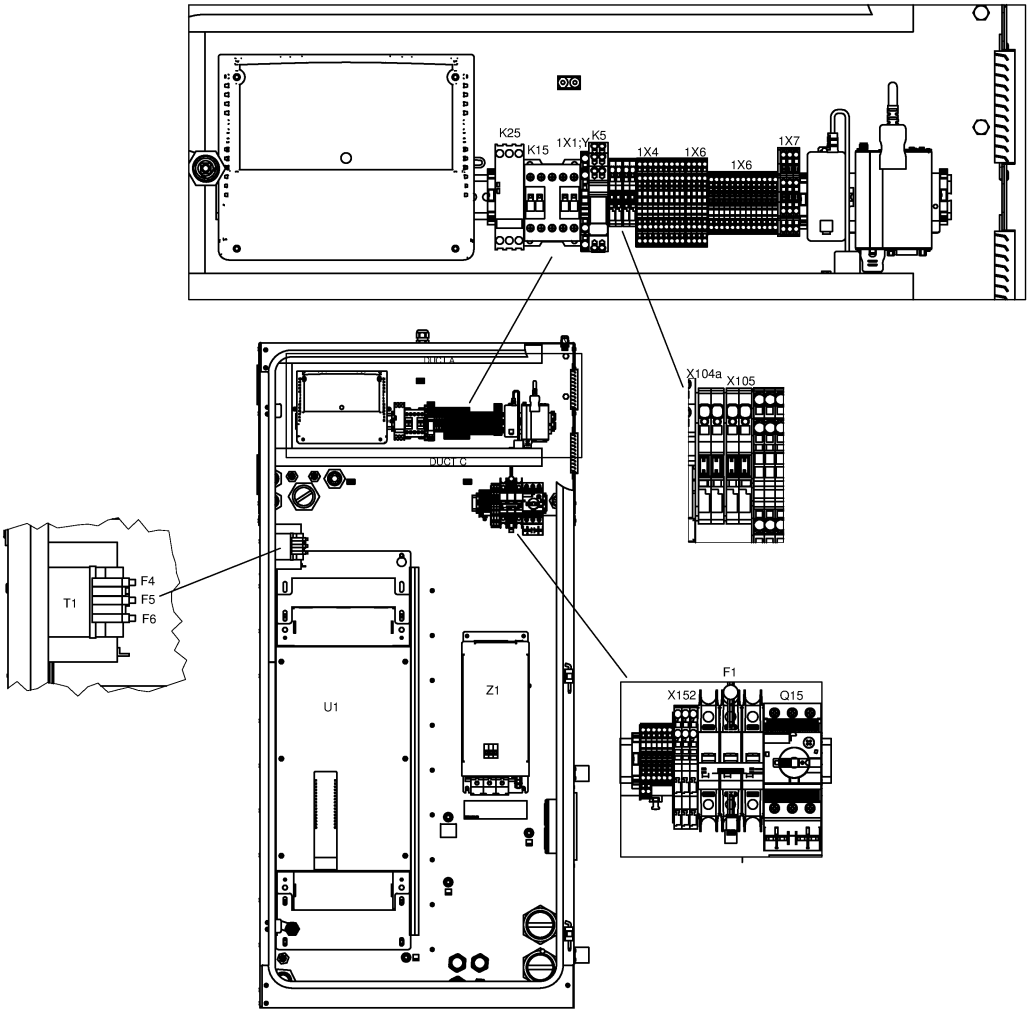

21.23 - Cubicle components GA 110 VSD+ - (200V-380V-460V/60Hz - IEC, 230V-460V-575V/60Hz - UL-cUL, 200V-400V-500V/50Hz - IEC) - Pack (20/07/2017 - 11/12/2018)

((((CAPPRM:AS1210 , CAPPRM:CE , CAPPRM:MHLW , CAPPRM:MOM) + MOVOL:400V , CAPPRM:CE + COOL:AIR + MOVOL:500V) + FREQ:50HZ , ((MOVOL:380V , MOVOL:460V) + CAPPRM:ASME , CAPPRM:MHLW + MOVOL:460V) + FREQ:60HZ) + CAPPRE:IEC , (COOL:AIR + MOVOL:575V , MOVOL:460V) + CAPPRE:ULCUL + CAPPRM:ASME + FREQ:60HZ) + IDRY:N + MODEL:GA110VP_16

Ref	Part Number	Qty	Name	Validity	EL
	1900 5350 18	1	INVERTER	**(20/07/2017 - 20/08/2018)** ((((CAPPRM:AS1210 , CAPPRM:CE , CAPPRM:MHLW , CAPPRM:MOM) + MOVOL:400V , CAPPRM:CE + MOVOL:500V , CAPPRM:MHLW + MOVOL:200V) + FREQ:50HZ , ((MOVOL:200V , MOVOL:460V) + CAPPRM:MHLW , (MOVOL:380V , MOVOL:460V) + CAPPRM:ASME) + FREQ:60HZ) + CAPPRE:IEC , (MOVOL:230V , MOVOL:460V , MOVOL:575V) + CAPPRE:ULCUL + CAPPRM:ASME + FREQ:60HZ) + COOL:AIR **(21/08/2018 - 11/12/2018)** ((((CAPPRM:AS1210 , CAPPRM:CE , CAPPRM:MHLW , CAPPRM:MOM) + MOVOL:400V , CAPPRM:CE + COOL:AIR + MOVOL:500V) + FREQ:50HZ , ((MOVOL:380V , MOVOL:460V) + CAPPRM:ASME , CAPPRM:MHLW + MOVOL:460V) + FREQ:60HZ , CAPPRM:MHLW + COOL:AIR + MOVOL:200V) + CAPPRE:IEC , ((MOVOL:230V , MOVOL:575V) + COOL:AIR , MOVOL:460V) + CAPPRE:ULCUL + CAPPRM:ASME + FREQ:60HZ)	U1
	1631 2079 00	1	NANOPERMRING	**(20/07/2017 - 20/08/2018)** ((((CAPPRM:AS1210 , CAPPRM:CE , CAPPRM:MHLW , CAPPRM:MOM) + MOVOL:400V , CAPPRM:CE + MOVOL:500V , CAPPRM:MHLW + MOVOL:200V) + FREQ:50HZ , ((MOVOL:200V , MOVOL:460V) + CAPPRM:MHLW , (MOVOL:380V , MOVOL:460V) + CAPPRM:ASME) + FREQ:60HZ) + CAPPRE:IEC , (MOVOL:230V , MOVOL:460V , MOVOL:575V) + CAPPRE:ULCUL + CAPPRM:ASME + FREQ:60HZ) + COOL:AIR **(21/08/2018 - 11/12/2018)** ((((CAPPRM:AS1210 , CAPPRM:CE , CAPPRM:MHLW , CAPPRM:MOM) + MOVOL:400V , CAPPRM:CE + COOL:AIR + MOVOL:500V) + FREQ:50HZ , ((MOVOL:380V , MOVOL:460V) + CAPPRM:ASME , CAPPRM:MHLW + MOVOL:460V) + FREQ:60HZ , CAPPRM:MHLW + COOL:AIR + MOVOL:200V) + CAPPRE:IEC , ((MOVOL:230V , MOVOL:575V) + COOL:AIR , MOVOL:460V) + CAPPRE:ULCUL + CAPPRM:ASME + FREQ:60HZ)	-
	0697 9811 17	2	PLUG	**(20/07/2017 - 20/08/2018)** ((((CAPPRM:AS1210 , CAPPRM:CE , CAPPRM:MHLW , CAPPRM:MOM) + MOVOL:400V , CAPPRM:CE + MOVOL:500V , CAPPRM:MHLW + MOVOL:200V) + FREQ:50HZ , ((MOVOL:200V , MOVOL:460V) + CAPPRM:MHLW , (MOVOL:380V , MOVOL:460V) + CAPPRM:ASME) + FREQ:60HZ) + CAPPRE:IEC , (MOVOL:230V , MOVOL:460V , MOVOL:575V) + CAPPRE:ULCUL + CAPPRM:ASME + FREQ:60HZ) + COOL:AIR **(21/08/2018 - 11/12/2018)** ((((CAPPRM:AS1210 , CAPPRM:CE , CAPPRM:MHLW , CAPPRM:MOM) + MOVOL:400V , CAPPRM:CE + COOL:AIR + MOVOL:500V) + FREQ:50HZ , ((MOVOL:380V , MOVOL:460V) + CAPPRM:ASME , CAPPRM:MHLW + MOVOL:460V) + FREQ:60HZ , CAPPRM:MHLW + COOL:AIR + MOVOL:200V) + CAPPRE:IEC , ((MOVOL:230V , MOVOL:575V) + COOL:AIR , MOVOL:460V) + CAPPRE:ULCUL + CAPPRM:ASME + FREQ:60HZ)	
	Electrical legend:	Plug for transfo supply			

Legend:

CAPPRE:IEC - Component approval electrical:IEC
CAPPRM:ASME - Component approval mechanical:ASME
CAPPRM:MOM - Component approval mechanical:MOM
FREQ:60HZ - Frequency:60 Hz
MOVOL:200V - Supply voltage:200 V
MOVOL:400V - Supply voltage:400 V
MOVOL:575V - Supply voltage:575 V
CAPPRE:ULCUL - Component approval electrical:UL/cUL
CAPPRM:CE - Component approval mechanical:CE
COOL:AIR - Cooling:Air cooled
IDRY:N - Integrated dryer:No
MOVOL:230V - Supply voltage:230 V
MOVOL:460V - Supply voltage:460 V
CAPPRM:AS1210 - Component approval mechanical:AS1210
CAPPRM:MHLW - Component approval mechanical:MHLW
FREQ:50HZ - Frequency:50 Hz
MODEL:GA110VP_16 - Model:GA 110VSD+
MOVOL:380V - Supply voltage:380 V
MOVOL:500V - Supply voltage:500 V

21.23 - Cubicle components GA 110 VSD+ - (200V-380V-460V/60Hz - IEC, 230V-460V-575V/60Hz - UL-cUL, 200V-400V-500V/50Hz - IEC) - Pack (20/07/2017 - 11/12/2018)

((((CAPPRM:AS1210 , CAPPRM:CE , CAPPRM:MHLW , CAPPRM:MOM) + MOVOL:400V , CAPPRM:CE + COOL:AIR + MOVOL:500V) + FREQ:50HZ , ((MOVOL:380V , MOVOL:460V) + CAPPRM:ASME , CAPPRM:MHLW + MOVOL:460V) + FREQ:60HZ) + CAPPRE:IEC , (COOL:AIR + MOVOL:575V , MOVOL:460V) + CAPPRE:ULCUL + CAPPRM:ASME + FREQ:60HZ) + IDRY:N + MODEL:GA110VP_16

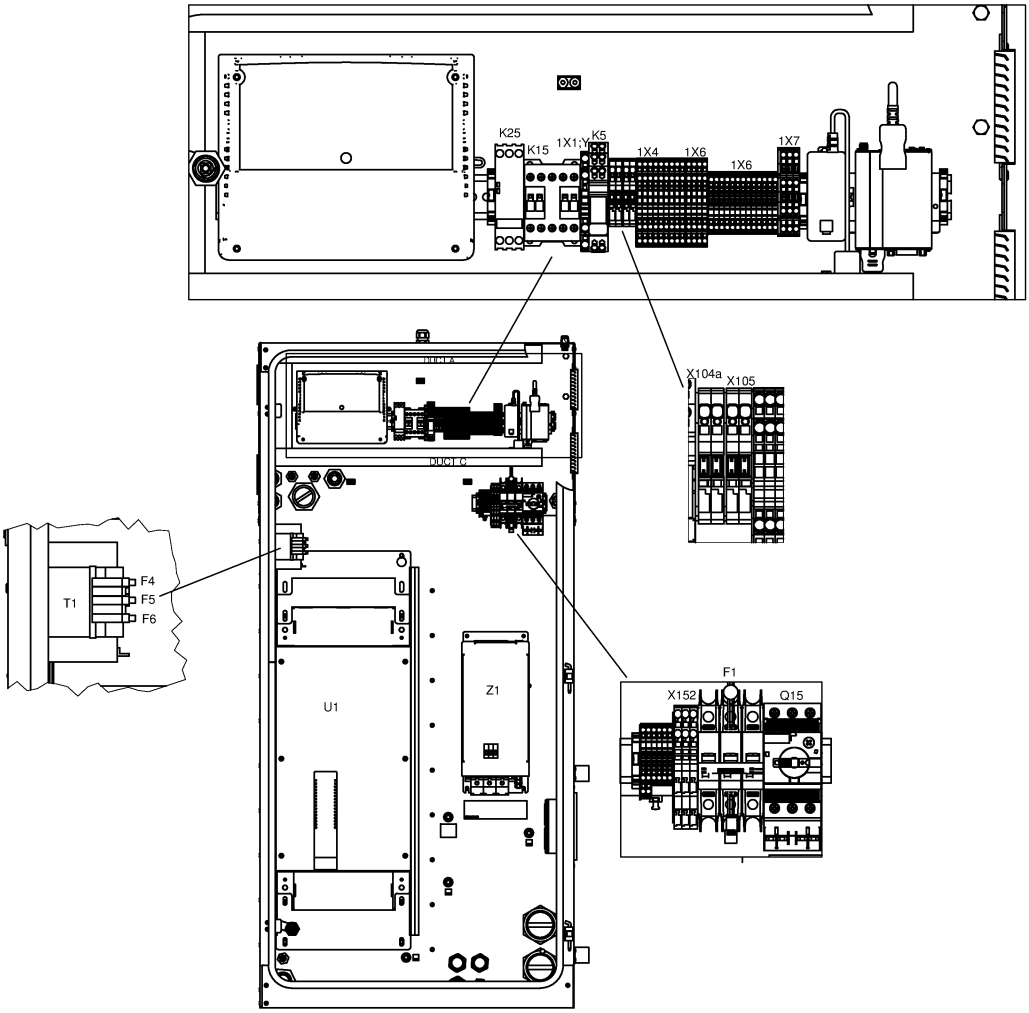

Ref	Part Number	Qty	Name	Validity	EL
	0989 3700 48	2	NUT	**(20/07/2017 - 20/08/2018)** ((((CAPPRM:AS1210 , CAPPRM:CE , CAPPRM:MHLW , CAPPRM:MOM) + MOVOL:400V , CAPPRM:CE + MOVOL:500V , CAPPRM:MHLW + MOVOL:200V) + FREQ:50HZ , ((MOVOL:200V , MOVOL:460V) + CAPPRM:MHLW , (MOVOL:380V , MOVOL:460V) + CAPPRM:ASME) + FREQ:60HZ) + CAPPRE:IEC , (MOVOL:230V , MOVOL:460V , MOVOL:575V) + CAPPRE:ULCUL + CAPPRM:ASME + FREQ:60HZ) + COOL:AIR **(21/08/2018 - 11/12/2018)** ((((CAPPRM:AS1210 , CAPPRM:CE , CAPPRM:MHLW , CAPPRM:MOM) + MOVOL:400V , CAPPRM:CE + COOL:AIR + MOVOL:500V) + FREQ:50HZ , ((MOVOL:380V , MOVOL:460V) + CAPPRM:ASME , CAPPRM:MHLW + MOVOL:460V) + FREQ:60HZ , CAPPRM:MHLW + COOL:AIR + MOVOL:200V) + CAPPRE:IEC , ((MOVOL:230V , MOVOL:575V) + COOL:AIR , MOVOL:460V) + CAPPRE:ULCUL + CAPPRM:ASME + FREQ:60HZ)	
	Electrical legend:	Nut for transfo supply			
	0698 5140 72	1	CABLE GLAND	**(20/07/2017 - 20/08/2018)** ((((CAPPRM:AS1210 , CAPPRM:CE , CAPPRM:MHLW , CAPPRM:MOM) + MOVOL:400V , CAPPRM:CE + MOVOL:500V , CAPPRM:MHLW + MOVOL:200V) + FREQ:50HZ , ((MOVOL:200V , MOVOL:460V) + CAPPRM:MHLW , (MOVOL:380V , MOVOL:460V) + CAPPRM:ASME) + FREQ:60HZ) + CAPPRE:IEC , (MOVOL:230V , MOVOL:460V , MOVOL:575V) + CAPPRE:ULCUL + CAPPRM:ASME + FREQ:60HZ) + COOL:AIR **(21/08/2018 - 11/12/2018)** ((((CAPPRM:AS1210 , CAPPRM:CE , CAPPRM:MHLW , CAPPRM:MOM) + MOVOL:400V , CAPPRM:CE + COOL:AIR + MOVOL:500V) + FREQ:50HZ , ((MOVOL:380V , MOVOL:460V) + CAPPRM:ASME , CAPPRM:MHLW + MOVOL:460V) + FREQ:60HZ , CAPPRM:MHLW + COOL:AIR + MOVOL:200V) + CAPPRE:IEC , ((MOVOL:230V , MOVOL:575V) + COOL:AIR , MOVOL:460V) + CAPPRE:ULCUL + CAPPRM:ASME + FREQ:60HZ)	Fan
	0698 5140 71	1	CABLE GLAND	**(20/07/2017 - 20/08/2018)** ((((CAPPRM:AS1210 , CAPPRM:CE , CAPPRM:MHLW , CAPPRM:MOM) + MOVOL:400V , CAPPRM:CE + MOVOL:500V , CAPPRM:MHLW + MOVOL:200V) + FREQ:50HZ , ((MOVOL:200V , MOVOL:460V) + CAPPRM:MHLW , (MOVOL:380V , MOVOL:460V) + CAPPRM:ASME) + FREQ:60HZ) + CAPPRE:IEC , (MOVOL:230V , MOVOL:460V , MOVOL:575V) + CAPPRE:ULCUL + CAPPRM:ASME + FREQ:60HZ) + COOL:AIR **(21/08/2018 - 11/12/2018)** ((((CAPPRM:AS1210 , CAPPRM:CE , CAPPRM:MHLW , CAPPRM:MOM) + MOVOL:400V , CAPPRM:CE + COOL:AIR + MOVOL:500V) + FREQ:50HZ , ((MOVOL:380V , MOVOL:460V) + CAPPRM:ASME , CAPPRM:MHLW + MOVOL:460V) + FREQ:60HZ , CAPPRM:MHLW + COOL:AIR + MOVOL:200V) + CAPPRE:IEC , ((MOVOL:230V , MOVOL:575V) + COOL:AIR , MOVOL:460V) + CAPPRE:ULCUL + CAPPRM:ASME + FREQ:60HZ)	
	Electrical legend:	Ambient sensor			

Legend:

CAPPRE:IEC - Component approval electrical:IEC
CAPPRM:ASME - Component approval mechanical:ASME
CAPPRM:MOM - Component approval mechanical:MOM
FREQ:60HZ - Frequency:60 Hz
MOVOL:200V - Supply voltage:200 V
MOVOL:400V - Supply voltage:400 V
MOVOL:575V - Supply voltage:575 V
CAPPRE:ULCUL - Component approval electrical:UL/cUL
CAPPRM:CE - Component approval mechanical:CE
COOL:AIR - Cooling:Air cooled
IDRY:N - Integrated dryer:No
MOVOL:230V - Supply voltage:230 V
MOVOL:460V - Supply voltage:460 V
CAPPRM:AS1210 - Component approval mechanical:AS1210
CAPPRM:MHLW - Component approval mechanical:MHLW
FREQ:50HZ - Frequency:50 Hz
MODEL:GA110VP_16 - Model:GA 110VSD+
MOVOL:380V - Supply voltage:380 V
MOVOL:500V - Supply voltage:500 V

21.23 - Cubicle components GA 110 VSD+ - (200V-380V-460V/60Hz - IEC, 230V-460V-575V/60Hz - UL-cUL, 200V-400V-500V/50Hz - IEC) - Pack (20/07/2017 - 11/12/2018)

((((CAPPRM:AS1210 , CAPPRM:CE , CAPPRM:MHLW , CAPPRM:MOM) + MOVOL:400V , CAPPRM:CE + COOL:AIR + MOVOL:500V) + FREQ:50HZ , ((MOVOL:380V , MOVOL:460V) + CAPPRM:ASME , CAPPRM:MHLW + MOVOL:460V) + FREQ:60HZ) + CAPPRE:IEC , (COOL:AIR + MOVOL:575V , MOVOL:460V) + CAPPRE:ULCUL + CAPPRM:ASME + FREQ:60HZ) + IDRY:N + MODEL:GA110VP_16

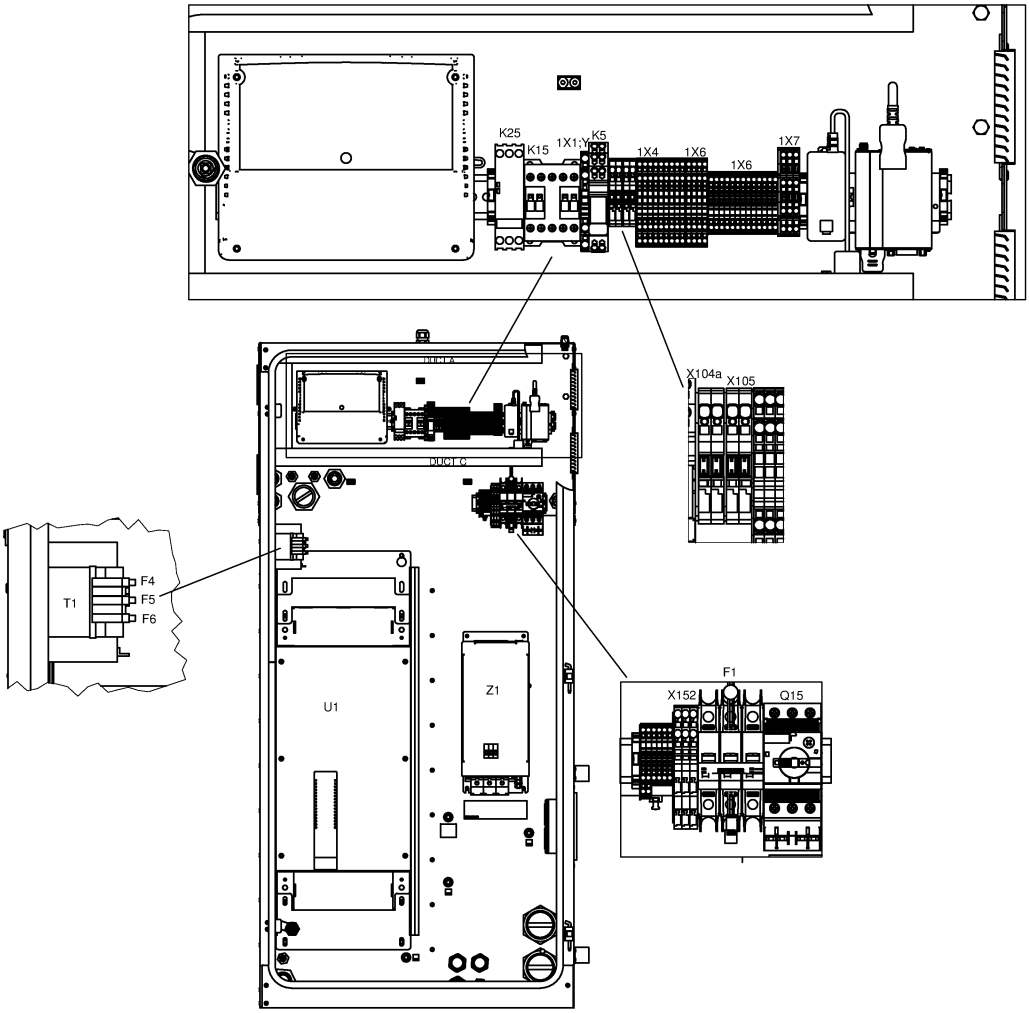

Ref	Part Number	Qty	Name	Validity	EL
	0697 9809 20	1	LOCKNUT	**(20/07/2017 - 20/08/2018)** ((((CAPPRM:AS1210 , CAPPRM:CE , CAPPRM:MHLW , CAPPRM:MOM) + MOVOL:400V , CAPPRM:CE + MOVOL:500V , CAPPRM:MHLW + MOVOL:200V) + FREQ:50HZ , ((MOVOL:200V , MOVOL:460V) + CAPPRM:MHLW , (MOVOL:380V , MOVOL:460V) + CAPPRM:ASME) + FREQ:60HZ) + CAPPRE:IEC , (MOVOL:230V , MOVOL:460V , MOVOL:575V) + CAPPRE:ULCUL + CAPPRM:ASME + FREQ:60HZ) + COOL:AIR **(21/08/2018 - 11/12/2018)** ((((CAPPRM:AS1210 , CAPPRM:CE , CAPPRM:MHLW , CAPPRM:MOM) + MOVOL:400V , CAPPRM:CE + COOL:AIR + MOVOL:500V) + FREQ:50HZ , ((MOVOL:380V , MOVOL:460V) + CAPPRM:ASME , CAPPRM:MHLW + MOVOL:460V) + FREQ:60HZ , CAPPRM:MHLW + COOL:AIR + MOVOL:200V) + CAPPRE:IEC , ((MOVOL:230V , MOVOL:575V) + COOL:AIR , MOVOL:460V) + CAPPRE:ULCUL + CAPPRM:ASME + FREQ:60HZ)	
	Electrical legend:	Ambient sensor			
	1089 9556 44	1	FAN WITH FILTER	**(20/07/2017 - 20/08/2018)** ((((CAPPRM:AS1210 , CAPPRM:CE , CAPPRM:MHLW , CAPPRM:MOM) + MOVOL:400V , CAPPRM:CE + MOVOL:500V , CAPPRM:MHLW + MOVOL:200V) + FREQ:50HZ , ((MOVOL:200V , MOVOL:460V) + CAPPRM:MHLW , (MOVOL:380V , MOVOL:460V) + CAPPRM:ASME) + FREQ:60HZ) + CAPPRE:IEC , (MOVOL:230V , MOVOL:460V , MOVOL:575V) + CAPPRE:ULCUL + CAPPRM:ASME + FREQ:60HZ) + COOL:AIR **(21/08/2018 - 11/12/2018)** ((((CAPPRM:AS1210 , CAPPRM:CE , CAPPRM:MHLW , CAPPRM:MOM) + MOVOL:400V , CAPPRM:CE + COOL:AIR + MOVOL:500V) + FREQ:50HZ , ((MOVOL:380V , MOVOL:460V) + CAPPRM:ASME , CAPPRM:MHLW + MOVOL:460V) + FREQ:60HZ , CAPPRM:MHLW + COOL:AIR + MOVOL:200V) + CAPPRE:IEC , ((MOVOL:230V , MOVOL:575V) + COOL:AIR , MOVOL:460V) + CAPPRE:ULCUL + CAPPRM:ASME + FREQ:60HZ)	Cubicle fan
		4	AIR INLET W/O FILTER	**(20/07/2017 - 20/08/2018)** ((((CAPPRM:AS1210 , CAPPRM:CE , CAPPRM:MHLW , CAPPRM:MOM) + MOVOL:400V , CAPPRM:CE + MOVOL:500V , CAPPRM:MHLW + MOVOL:200V) + FREQ:50HZ , ((MOVOL:200V , MOVOL:460V) + CAPPRM:MHLW , (MOVOL:380V , MOVOL:460V) + CAPPRM:ASME) + FREQ:60HZ) + CAPPRE:IEC , (MOVOL:230V , MOVOL:460V , MOVOL:575V) + CAPPRE:ULCUL + CAPPRM:ASME + FREQ:60HZ) + COOL:AIR **(21/08/2018 - 11/12/2018)** ((((CAPPRM:AS1210 , CAPPRM:CE , CAPPRM:MHLW , CAPPRM:MOM) + MOVOL:400V , CAPPRM:CE + COOL:AIR + MOVOL:500V) + FREQ:50HZ , ((MOVOL:380V , MOVOL:460V) + CAPPRM:ASME , CAPPRM:MHLW + MOVOL:460V) + FREQ:60HZ , CAPPRM:MHLW + COOL:AIR + MOVOL:200V) + CAPPRE:IEC , ((MOVOL:230V , MOVOL:575V) + COOL:AIR , MOVOL:460V) + CAPPRE:ULCUL + CAPPRM:ASME + FREQ:60HZ)	-
	Service kits:	2901 9901 02 - PREVENTIVE MAINTENANCE KIT - GA 90 VSD+, GA 110 VSD+ 2901 9900 96 - AIR FILTER KIT - GA 90 VSD+, GA 110 VSD+			

Legend:

CAPPRE:IEC - Component approval electrical:IEC
CAPPRM:ASME - Component approval mechanical:ASME
CAPPRM:MOM - Component approval mechanical:MOM
FREQ:60HZ - Frequency:60 Hz
MOVOL:200V - Supply voltage:200 V
MOVOL:400V - Supply voltage:400 V
MOVOL:575V - Supply voltage:575 V
CAPPRE:ULCUL - Component approval electrical:UL/cUL
CAPPRM:CE - Component approval mechanical:CE
COOL:AIR - Cooling:Air cooled
IDRY:N - Integrated dryer:No
MOVOL:230V - Supply voltage:230 V
MOVOL:460V - Supply voltage:460 V
CAPPRM:AS1210 - Component approval mechanical:AS1210
CAPPRM:MHLW - Component approval mechanical:MHLW
FREQ:50HZ - Frequency:50 Hz
MODEL:GA110VP_16 - Model:GA 110VSD+
MOVOL:380V - Supply voltage:380 V
MOVOL:500V - Supply voltage:500 V

21.23 - Cubicle components GA 110 VSD+ - (200V-380V-460V/60Hz - IEC, 230V-460V-575V/60Hz - UL-cUL, 200V-400V-500V/50Hz - IEC) - Pack (20/07/2017 - 11/12/2018)

((((CAPPRM:AS1210 , CAPPRM:CE , CAPPRM:MHLW , CAPPRM:MOM) + MOVOL:400V , CAPPRM:CE + COOL:AIR + MOVOL:500V) + FREQ:50HZ , ((MOVOL:380V , MOVOL:460V) + CAPPRM:ASME , CAPPRM:MHLW + MOVOL:460V) + FREQ:60HZ) + CAPPRE:IEC , (COOL:AIR + MOVOL:575V , MOVOL:460V) + CAPPRE:ULCUL + CAPPRM:ASME + FREQ:60HZ) + IDRY:N + MODEL:GA110VP_16

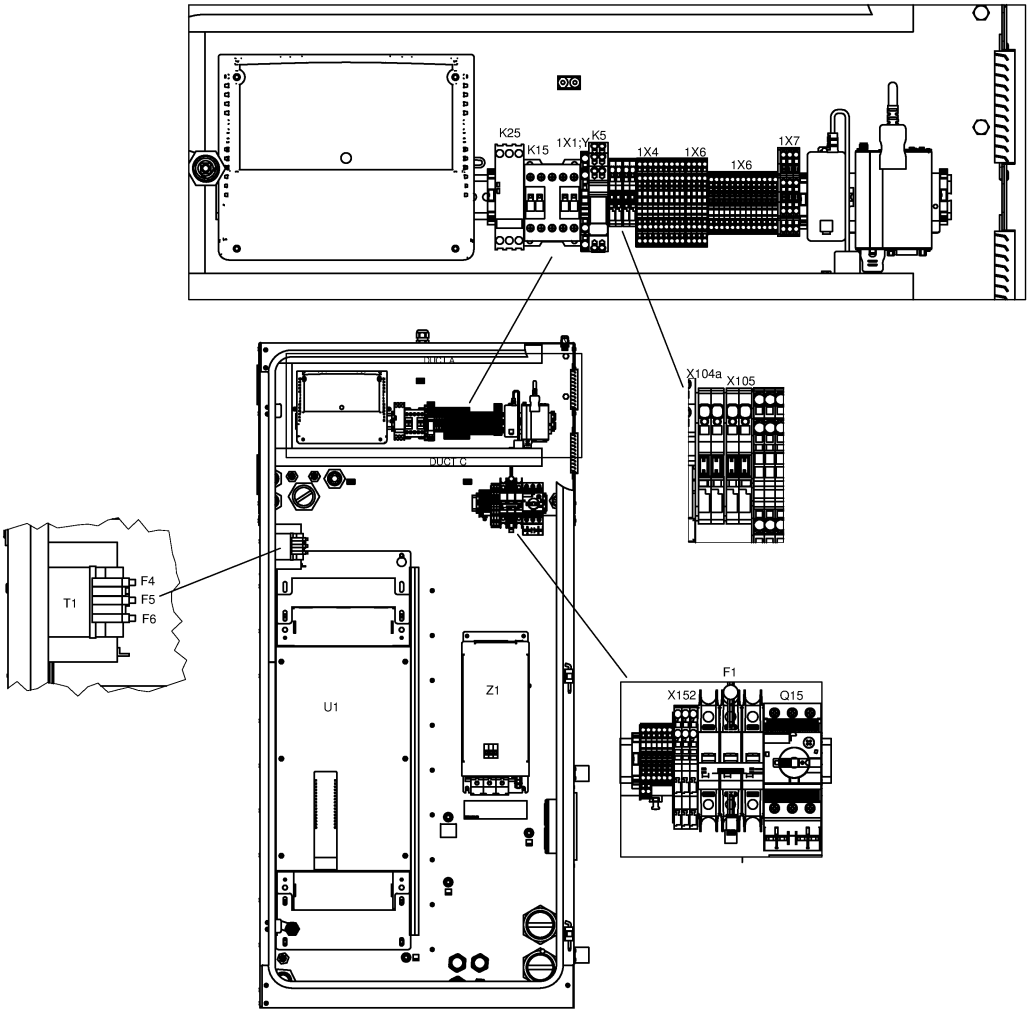

21.23 - Cubicle components GA 110 VSD+ - (200V-380V-460V/60Hz - IEC, 230V-460V-575V/60Hz - UL-cUL, 200V-400V-500V/50Hz - IEC) - Pack (20/07/2017 - 11/12/2018)

((((CAPPRM:AS1210 , CAPPRM:CE , CAPPRM:MHLW , CAPPRM:MOM) + MOVOL:400V , CAPPRM:CE + COOL:AIR + MOVOL:500V) + FREQ:50HZ , ((MOVOL:380V , MOVOL:460V) + CAPPRM:ASME , CAPPRM:MHLW + MOVOL:460V) + FREQ:60HZ) + CAPPRE:IEC , (COOL:AIR + MOVOL:575V , MOVOL:460V) + CAPPRE:ULCUL + CAPPRM:ASME + FREQ:60HZ) + IDRY:N + MODEL:GA110VP_16

Ref	Part Number	Qty	Name	Validity	EL
	1088 0032 09	1	CONNECTOR	**(20/07/2017 - 20/08/2018)** ((((CAPPRM:AS1210 , CAPPRM:CE , CAPPRM:MHLW , CAPPRM:MOM) + MOVOL:400V , CAPPRM:CE + MOVOL:500V , CAPPRM:MHLW + MOVOL:200V) + FREQ:50HZ , ((MOVOL:200V , MOVOL:460V) + CAPPRM:MHLW , (MOVOL:380V , MOVOL:460V) + CAPPRM:ASME) + FREQ:60HZ) + CAPPRE:IEC , (MOVOL:230V , MOVOL:460V , MOVOL:575V) + CAPPRE:ULCUL + CAPPRM:ASME + FREQ:60HZ) + COOL:AIR **(21/08/2018 - 11/12/2018)** ((((CAPPRM:AS1210 , CAPPRM:CE , CAPPRM:MHLW , CAPPRM:MOM) + MOVOL:400V , CAPPRM:CE + COOL:AIR + MOVOL:500V) + FREQ:50HZ , ((MOVOL:380V , MOVOL:460V) + CAPPRM:ASME , CAPPRM:MHLW + MOVOL:460V) + FREQ:60HZ , CAPPRM:MHLW + COOL:AIR + MOVOL:200V) + CAPPRE:IEC , ((MOVOL:230V , MOVOL:575V) + COOL:AIR , MOVOL:460V) + CAPPRE:ULCUL + CAPPRM:ASME + FREQ:60HZ)	X3
	1089 9572 04	1	LINE FILTER	**(20/07/2017 - 20/08/2018)** ((((CAPPRM:AS1210 , CAPPRM:CE , CAPPRM:MHLW , CAPPRM:MOM) + MOVOL:400V , CAPPRM:CE + MOVOL:500V , CAPPRM:MHLW + MOVOL:200V) + FREQ:50HZ , ((MOVOL:200V , MOVOL:460V) + CAPPRM:MHLW , (MOVOL:380V , MOVOL:460V) + CAPPRM:ASME) + FREQ:60HZ) + CAPPRE:IEC , (MOVOL:230V , MOVOL:460V , MOVOL:575V) + CAPPRE:ULCUL + CAPPRM:ASME + FREQ:60HZ) + COOL:AIR **(21/08/2018 - 11/12/2018)** ((((CAPPRM:AS1210 , CAPPRM:CE , CAPPRM:MHLW , CAPPRM:MOM) + MOVOL:400V , CAPPRM:CE + COOL:AIR + MOVOL:500V) + FREQ:50HZ , ((MOVOL:380V , MOVOL:460V) + CAPPRM:ASME , CAPPRM:MHLW + MOVOL:460V) + FREQ:60HZ , CAPPRM:MHLW + COOL:AIR + MOVOL:200V) + CAPPRE:IEC , ((MOVOL:230V , MOVOL:575V) + COOL:AIR , MOVOL:460V) + CAPPRE:ULCUL + CAPPRM:ASME + FREQ:60HZ)	Z1 for 110kw
	Electrical legend:	Z1 for 110kw			
	1089 9562 04	1	STRAP	**(20/07/2017 - 20/08/2018)** ((((CAPPRM:AS1210 , CAPPRM:CE , CAPPRM:MHLW , CAPPRM:MOM) + MOVOL:400V , CAPPRM:CE + MOVOL:500V , CAPPRM:MHLW + MOVOL:200V) + FREQ:50HZ , ((MOVOL:200V , MOVOL:460V) + CAPPRM:MHLW , (MOVOL:380V , MOVOL:460V) + CAPPRM:ASME) + FREQ:60HZ) + CAPPRE:IEC , (MOVOL:230V , MOVOL:460V , MOVOL:575V) + CAPPRE:ULCUL + CAPPRM:ASME + FREQ:60HZ) + COOL:AIR **(21/08/2018 - 11/12/2018)** ((((CAPPRM:AS1210 , CAPPRM:CE , CAPPRM:MHLW , CAPPRM:MOM) + MOVOL:400V , CAPPRM:CE + COOL:AIR + MOVOL:500V) + FREQ:50HZ , ((MOVOL:380V , MOVOL:460V) + CAPPRM:ASME , CAPPRM:MHLW + MOVOL:460V) + FREQ:60HZ , CAPPRM:MHLW + COOL:AIR + MOVOL:200V) + CAPPRE:IEC , ((MOVOL:230V , MOVOL:575V) + COOL:AIR , MOVOL:460V) + CAPPRE:ULCUL + CAPPRM:ASME + FREQ:60HZ)	HF-screen

Legend:

CAPPRE:IEC - Component approval electrical:IEC
CAPPRM:ASME - Component approval mechanical:ASME
CAPPRM:MOM - Component approval mechanical:MOM
FREQ:60HZ - Frequency:60 Hz
MOVOL:200V - Supply voltage:200 V
MOVOL:400V - Supply voltage:400 V
MOVOL:575V - Supply voltage:575 V
CAPPRE:ULCUL - Component approval electrical:UL/cUL
CAPPRM:CE - Component approval mechanical:CE
COOL:AIR - Cooling:Air cooled
IDRY:N - Integrated dryer:No
MOVOL:230V - Supply voltage:230 V
MOVOL:460V - Supply voltage:460 V
CAPPRM:AS1210 - Component approval mechanical:AS1210
CAPPRM:MHLW - Component approval mechanical:MHLW
FREQ:50HZ - Frequency:50 Hz
MODEL:GA110VP_16 - Model:GA 110VSD+
MOVOL:380V - Supply voltage:380 V
MOVOL:500V - Supply voltage:500 V

21.23 - Cubicle components GA 110 VSD+ - (200V-380V-460V/60Hz - IEC, 230V-460V-575V/60Hz - UL-cUL, 200V-400V-500V/50Hz - IEC) - Pack (20/07/2017 - 11/12/2018)

((((CAPPRM:AS1210 , CAPPRM:CE , CAPPRM:MHLW , CAPPRM:MOM) + MOVOL:400V , CAPPRM:CE + COOL:AIR + MOVOL:500V) + FREQ:50HZ , ((MOVOL:380V , MOVOL:460V) + CAPPRM:ASME , CAPPRM:MHLW + MOVOL:460V) + FREQ:60HZ) + CAPPRE:IEC , (COOL:AIR + MOVOL:575V , MOVOL:460V) + CAPPRE:ULCUL + CAPPRM:ASME + FREQ:60HZ) + IDRY:N + MODEL:GA110VP_16

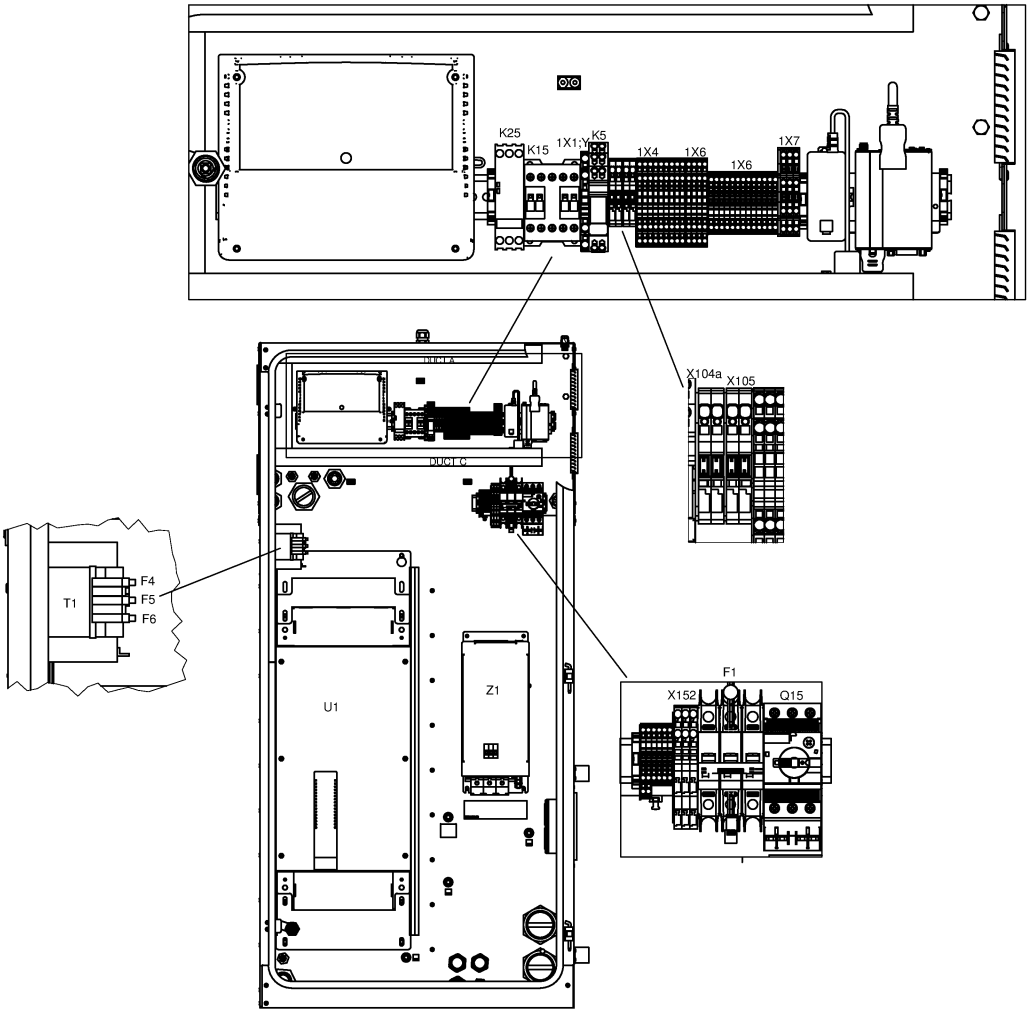

21.23 - Cubicle components GA 110 VSD+ - (200V-380V-460V/60Hz - IEC, 230V-460V-575V/60Hz - UL-cUL, 200V-400V-500V/50Hz - IEC) - Pack (20/07/2017 - 11/12/2018)

((((CAPPRM:AS1210 , CAPPRM:CE , CAPPRM:MHLW , CAPPRM:MOM) + MOVOL:400V , CAPPRM:CE + COOL:AIR + MOVOL:500V) + FREQ:50HZ , ((MOVOL:380V , MOVOL:460V) + CAPPRM:ASME , CAPPRM:MHLW + MOVOL:460V) + FREQ:60HZ) + CAPPRE:IEC , (COOL:AIR + MOVOL:575V , MOVOL:460V) + CAPPRE:ULCUL + CAPPRM:ASME + FREQ:60HZ) + IDRY:N + MODEL:GA110VP_16

Ref	Part Number	Qty	Name	Validity	EL
	1089 9514 56	1	TRANSFORMER	**(20/07/2017 - 20/08/2018)** ((((CAPPRM:AS1210 , CAPPRM:CE , CAPPRM:MHLW , CAPPRM:MOM) + MOVOL:400V , CAPPRM:CE + MOVOL:500V , CAPPRM:MHLW + MOVOL:200V) + FREQ:50HZ , ((MOVOL:200V , MOVOL:460V) + CAPPRM:MHLW , (MOVOL:380V , MOVOL:460V) + CAPPRM:ASME) + FREQ:60HZ) + CAPPRE:IEC , (MOVOL:230V , MOVOL:460V , MOVOL:575V) + CAPPRE:ULCUL + CAPPRM:ASME + FREQ:60HZ) + COOL:AIR **(21/08/2018 - 11/12/2018)** ((((CAPPRM:AS1210 , CAPPRM:CE , CAPPRM:MHLW , CAPPRM:MOM) + MOVOL:400V , CAPPRM:CE + COOL:AIR + MOVOL:500V) + FREQ:50HZ , ((MOVOL:380V , MOVOL:460V) + CAPPRM:ASME , CAPPRM:MHLW + MOVOL:460V) + FREQ:60HZ , CAPPRM:MHLW + COOL:AIR + MOVOL:200V) + CAPPRE:IEC , ((MOVOL:230V , MOVOL:575V) + COOL:AIR , MOVOL:460V) + CAPPRE:ULCUL + CAPPRM:ASME + FREQ:60HZ)	T1
	1089 9522 26	1	CIRCUIT BREAKER	**(20/07/2017 - 20/08/2018)** ((((CAPPRM:AS1210 , CAPPRM:CE , CAPPRM:MHLW , CAPPRM:MOM) + MOVOL:400V , CAPPRM:CE + MOVOL:500V , CAPPRM:MHLW + MOVOL:200V) + FREQ:50HZ , ((MOVOL:200V , MOVOL:460V) + CAPPRM:MHLW , (MOVOL:380V , MOVOL:460V) + CAPPRM:ASME) + FREQ:60HZ) + CAPPRE:IEC , (MOVOL:230V , MOVOL:460V , MOVOL:575V) + CAPPRE:ULCUL + CAPPRM:ASME + FREQ:60HZ) + COOL:AIR **(21/08/2018 - 11/12/2018)** ((((CAPPRM:AS1210 , CAPPRM:CE , CAPPRM:MHLW , CAPPRM:MOM) + MOVOL:400V , CAPPRM:CE + COOL:AIR + MOVOL:500V) + FREQ:50HZ , ((MOVOL:380V , MOVOL:460V) + CAPPRM:ASME , CAPPRM:MHLW + MOVOL:460V) + FREQ:60HZ , CAPPRM:MHLW + COOL:AIR + MOVOL:200V) + CAPPRE:IEC , ((MOVOL:230V , MOVOL:575V) + COOL:AIR , MOVOL:460V) + CAPPRE:ULCUL + CAPPRM:ASME + FREQ:60HZ)	F1
	1089 9513 41	1	PUSH BUTTON	**(20/07/2017 - 20/08/2018)** ((((CAPPRM:AS1210 , CAPPRM:CE , CAPPRM:MHLW , CAPPRM:MOM) + MOVOL:400V , CAPPRM:CE + MOVOL:500V , CAPPRM:MHLW + MOVOL:200V) + FREQ:50HZ , ((MOVOL:200V , MOVOL:460V) + CAPPRM:MHLW , (MOVOL:380V , MOVOL:460V) + CAPPRM:ASME) + FREQ:60HZ) + CAPPRE:IEC , (MOVOL:230V , MOVOL:460V , MOVOL:575V) + CAPPRE:ULCUL + CAPPRM:ASME + FREQ:60HZ) + COOL:AIR **(21/08/2018 - 11/12/2018)** ((((CAPPRM:AS1210 , CAPPRM:CE , CAPPRM:MHLW , CAPPRM:MOM) + MOVOL:400V , CAPPRM:CE + COOL:AIR + MOVOL:500V) + FREQ:50HZ , ((MOVOL:380V , MOVOL:460V) + CAPPRM:ASME , CAPPRM:MHLW + MOVOL:460V) + FREQ:60HZ , CAPPRM:MHLW + COOL:AIR + MOVOL:200V) + CAPPRE:IEC , ((MOVOL:230V , MOVOL:575V) + COOL:AIR , MOVOL:460V) + CAPPRE:ULCUL + CAPPRM:ASME + FREQ:60HZ)	S3

Legend:

CAPPRE:IEC - Component approval electrical:IEC
CAPPRM:ASME - Component approval mechanical:ASME
CAPPRM:MOM - Component approval mechanical:MOM
FREQ:60HZ - Frequency:60 Hz
MOVOL:200V - Supply voltage:200 V
MOVOL:400V - Supply voltage:400 V
MOVOL:575V - Supply voltage:575 V
CAPPRE:ULCUL - Component approval electrical:UL/cUL
CAPPRM:CE - Component approval mechanical:CE
COOL:AIR - Cooling:Air cooled
IDRY:N - Integrated dryer:No
MOVOL:230V - Supply voltage:230 V
MOVOL:460V - Supply voltage:460 V
CAPPRM:AS1210 - Component approval mechanical:AS1210
CAPPRM:MHLW - Component approval mechanical:MHLW
FREQ:50HZ - Frequency:50 Hz
MODEL:GA110VP_16 - Model:GA 110VSD+
MOVOL:380V - Supply voltage:380 V
MOVOL:500V - Supply voltage:500 V

21.23 - Cubicle components GA 110 VSD+ - (200V-380V-460V/60Hz - IEC, 230V-460V-575V/60Hz - UL-cUL, 200V-400V-500V/50Hz - IEC) - Pack (20/07/2017 - 11/12/2018)

((((CAPPRM:AS1210 , CAPPRM:CE , CAPPRM:MHLW , CAPPRM:MOM) + MOVOL:400V , CAPPRM:CE + COOL:AIR + MOVOL:500V) + FREQ:50HZ , ((MOVOL:380V , MOVOL:460V) + CAPPRM:ASME , CAPPRM:MHLW + MOVOL:460V) + FREQ:60HZ) + CAPPRE:IEC , (COOL:AIR + MOVOL:575V , MOVOL:460V) + CAPPRE:ULCUL + CAPPRM:ASME + FREQ:60HZ) + IDRY:N + MODEL:GA110VP_16

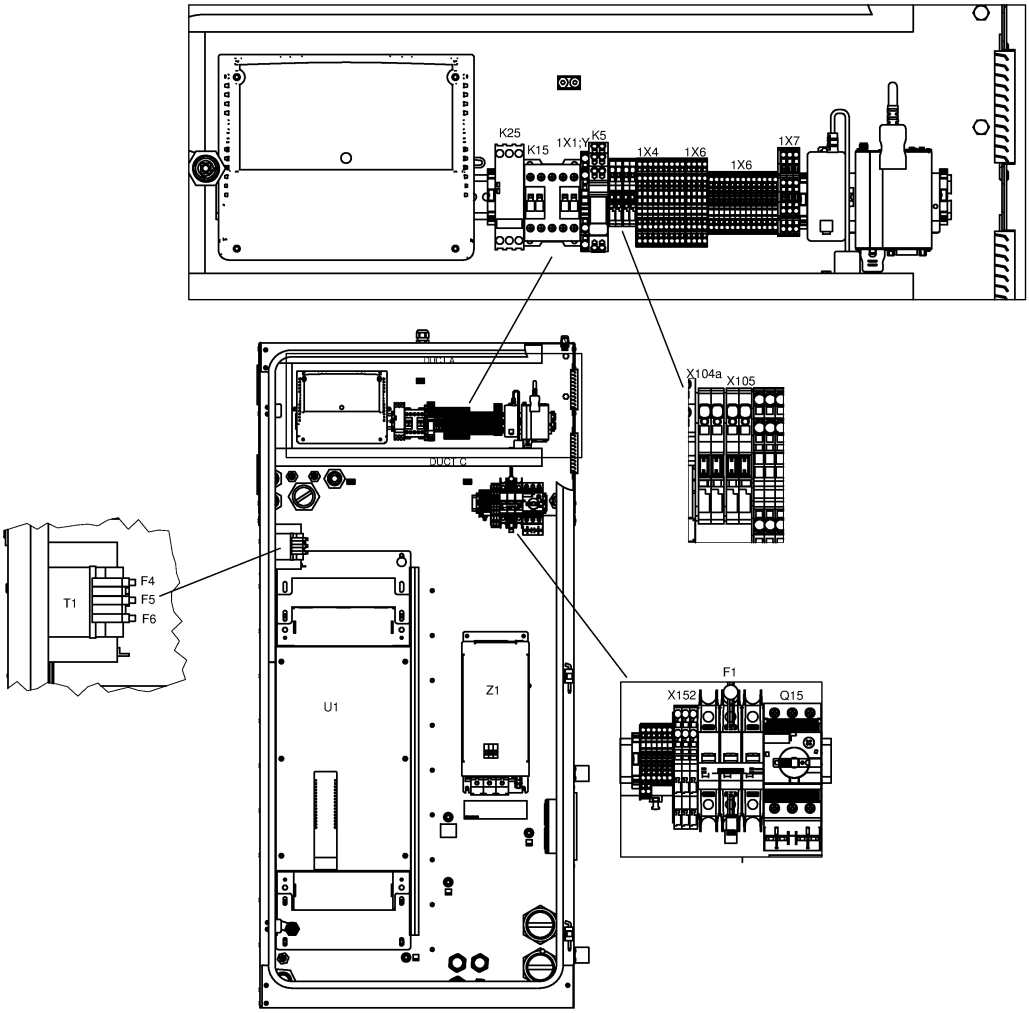

21.23 - Cubicle components GA 110 VSD+ - (200V-380V-460V/60Hz - IEC, 230V-460V-575V/60Hz - UL-cUL, 200V-400V-500V/50Hz - IEC) - Pack (20/07/2017 - 11/12/2018)

((((CAPPRM:AS1210 , CAPPRM:CE , CAPPRM:MHLW , CAPPRM:MOM) + MOVOL:400V , CAPPRM:CE + COOL:AIR + MOVOL:500V) + FREQ:50HZ , ((MOVOL:380V , MOVOL:460V) + CAPPRM:ASME , CAPPRM:MHLW + MOVOL:460V) + FREQ:60HZ) + CAPPRE:IEC , (COOL:AIR + MOVOL:575V , MOVOL:460V) + CAPPRE:ULCUL + CAPPRM:ASME + FREQ:60HZ) + IDRY:N + MODEL:GA110VP_16

Ref	Part Number	Qty	Name	Validity	EL
	1089 9513 28	1	HOLDER	**(20/07/2017 - 20/08/2018)** ((((CAPPRM:AS1210 , CAPPRM:CE , CAPPRM:MHLW , CAPPRM:MOM) + MOVOL:400V , CAPPRM:CE + MOVOL:500V , CAPPRM:MHLW + MOVOL:200V) + FREQ:50HZ , ((MOVOL:200V , MOVOL:460V) + CAPPRM:MHLW , (MOVOL:380V , MOVOL:460V) + CAPPRM:ASME) + FREQ:60HZ) + CAPPRE:IEC , (MOVOL:230V , MOVOL:460V , MOVOL:575V) + CAPPRE:ULCUL + CAPPRM:ASME + FREQ:60HZ) + COOL:AIR **(21/08/2018 - 11/12/2018)** ((((CAPPRM:AS1210 , CAPPRM:CE , CAPPRM:MHLW , CAPPRM:MOM) + MOVOL:400V , CAPPRM:CE + COOL:AIR + MOVOL:500V) + FREQ:50HZ , ((MOVOL:380V , MOVOL:460V) + CAPPRM:ASME , CAPPRM:MHLW + MOVOL:460V) + FREQ:60HZ , CAPPRM:MHLW + COOL:AIR + MOVOL:200V) + CAPPRE:IEC , ((MOVOL:230V , MOVOL:575V) + COOL:AIR , MOVOL:460V) + CAPPRE:ULCUL + CAPPRM:ASME + FREQ:60HZ)	S3
	~~1089 9513 30~~	4	CONTACTOR	**(20/07/2017 - 20/08/2018)** ((((CAPPRM:AS1210 , CAPPRM:CE , CAPPRM:MHLW , CAPPRM:MOM) + MOVOL:400V , CAPPRM:CE + MOVOL:500V , CAPPRM:MHLW + MOVOL:200V) + FREQ:50HZ , ((MOVOL:200V , MOVOL:460V) + CAPPRM:MHLW , (MOVOL:380V , MOVOL:460V) + CAPPRM:ASME) + FREQ:60HZ) + CAPPRE:IEC , (MOVOL:230V , MOVOL:460V , MOVOL:575V) + CAPPRE:ULCUL + CAPPRM:ASME + FREQ:60HZ) + COOL:AIR **(21/08/2018 - 11/12/2018)** ((((CAPPRM:AS1210 , CAPPRM:CE , CAPPRM:MHLW , CAPPRM:MOM) + MOVOL:400V , CAPPRM:CE + COOL:AIR + MOVOL:500V) + FREQ:50HZ , ((MOVOL:380V , MOVOL:460V) + CAPPRM:ASME , CAPPRM:MHLW + MOVOL:460V) + FREQ:60HZ , CAPPRM:MHLW + COOL:AIR + MOVOL:200V) + CAPPRE:IEC , ((MOVOL:230V , MOVOL:575V) + COOL:AIR , MOVOL:460V) + CAPPRE:ULCUL + CAPPRM:ASME + FREQ:60HZ)	S3
	Substituted by:	1089 9513 04 - CONTACT BLOCK (quantity: 1)			
	1088 0031 02	1	CONNECTOR 2-POLE	**(20/07/2017 - 20/08/2018)** ((((CAPPRM:AS1210 , CAPPRM:CE , CAPPRM:MHLW , CAPPRM:MOM) + MOVOL:400V , CAPPRM:CE + MOVOL:500V , CAPPRM:MHLW + MOVOL:200V) + FREQ:50HZ , ((MOVOL:200V , MOVOL:460V) + CAPPRM:MHLW , (MOVOL:380V , MOVOL:460V) + CAPPRM:ASME) + FREQ:60HZ) + CAPPRE:IEC , (MOVOL:230V , MOVOL:460V , MOVOL:575V) + CAPPRE:ULCUL + CAPPRM:ASME + FREQ:60HZ) + COOL:AIR **(21/08/2018 - 11/12/2018)** ((((CAPPRM:AS1210 , CAPPRM:CE , CAPPRM:MHLW , CAPPRM:MOM) + MOVOL:400V , CAPPRM:CE + COOL:AIR + MOVOL:500V) + FREQ:50HZ , ((MOVOL:380V , MOVOL:460V) + CAPPRM:ASME , CAPPRM:MHLW + MOVOL:460V) + FREQ:60HZ , CAPPRM:MHLW + COOL:AIR + MOVOL:200V) + CAPPRE:IEC , ((MOVOL:230V , MOVOL:575V) + COOL:AIR , MOVOL:460V) + CAPPRE:ULCUL + CAPPRM:ASME + FREQ:60HZ)	
	Electrical legend:	X153 (Smartbox)			

Legend:

CAPPRE:IEC - Component approval electrical:IEC
CAPPRM:ASME - Component approval mechanical:ASME
CAPPRM:MOM - Component approval mechanical:MOM
FREQ:60HZ - Frequency:60 Hz
MOVOL:200V - Supply voltage:200 V
MOVOL:400V - Supply voltage:400 V
MOVOL:575V - Supply voltage:575 V
CAPPRE:ULCUL - Component approval electrical:UL/cUL
CAPPRM:CE - Component approval mechanical:CE
COOL:AIR - Cooling:Air cooled
IDRY:N - Integrated dryer:No
MOVOL:230V - Supply voltage:230 V
MOVOL:460V - Supply voltage:460 V
CAPPRM:AS1210 - Component approval mechanical:AS1210
CAPPRM:MHLW - Component approval mechanical:MHLW
FREQ:50HZ - Frequency:50 Hz
MODEL:GA110VP_16 - Model:GA 110VSD+
MOVOL:380V - Supply voltage:380 V
MOVOL:500V - Supply voltage:500 V

21.23 - Cubicle components GA 110 VSD+ - (200V-380V-460V/60Hz - IEC, 230V-460V-575V/60Hz - UL-cUL, 200V-400V-500V/50Hz - IEC) - Pack (20/07/2017 - 11/12/2018)

((((CAPPRM:AS1210 , CAPPRM:CE , CAPPRM:MHLW , CAPPRM:MOM) + MOVOL:400V , CAPPRM:CE + COOL:AIR + MOVOL:500V) + FREQ:50HZ , ((MOVOL:380V , MOVOL:460V) + CAPPRM:ASME , CAPPRM:MHLW + MOVOL:460V) + FREQ:60HZ) + CAPPRE:IEC , (COOL:AIR + MOVOL:575V , MOVOL:460V) + CAPPRE:ULCUL + CAPPRM:ASME + FREQ:60HZ) + IDRY:N + MODEL:GA110VP_16

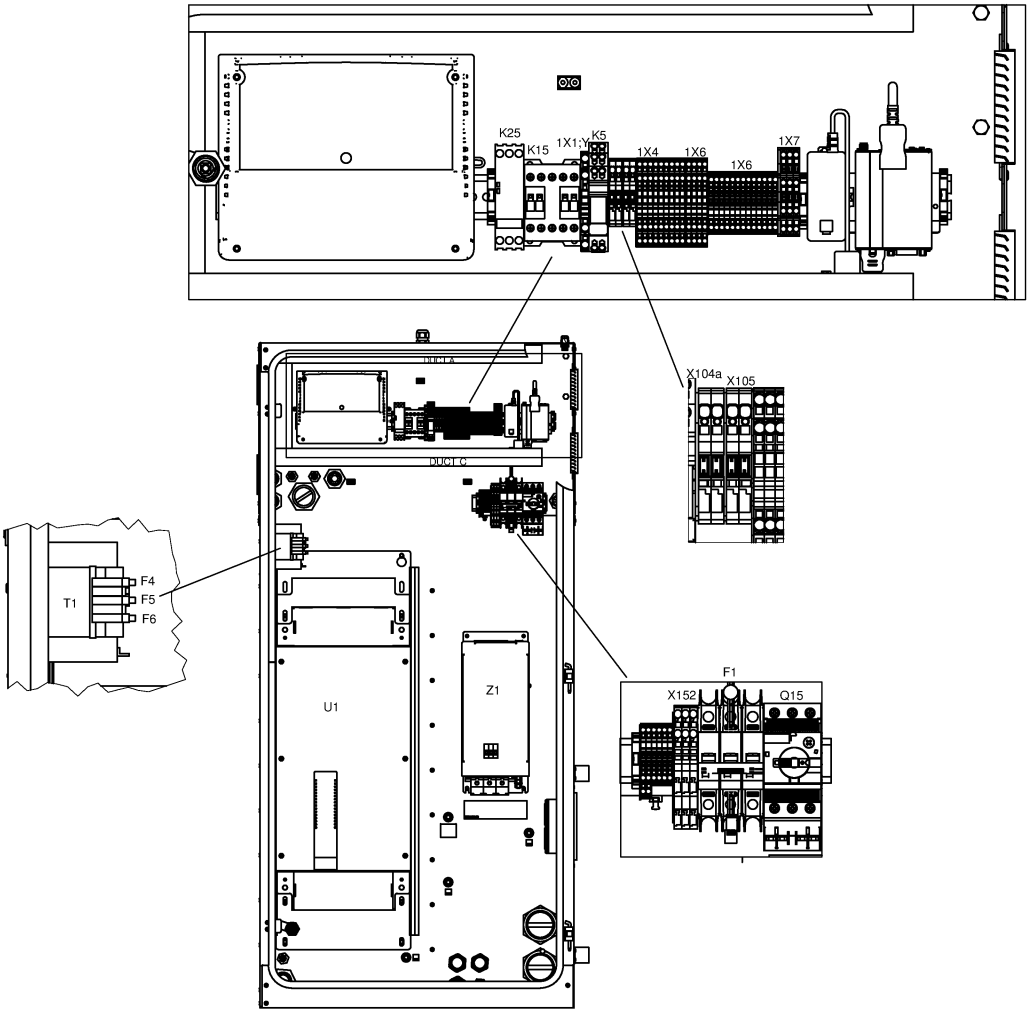

21.23 - Cubicle components GA 110 VSD+ - (200V-380V-460V/60Hz - IEC, 230V-460V-575V/60Hz - UL-cUL, 200V-400V-500V/50Hz - IEC) - Pack (20/07/2017 - 11/12/2018)

((((CAPPRM:AS1210 , CAPPRM:CE , CAPPRM:MHLW , CAPPRM:MOM) + MOVOL:400V , CAPPRM:CE + COOL:AIR + MOVOL:500V) + FREQ:50HZ , ((MOVOL:380V , MOVOL:460V) + CAPPRM:ASME , CAPPRM:MHLW + MOVOL:460V) + FREQ:60HZ) + CAPPRE:IEC , (COOL:AIR + MOVOL:575V , MOVOL:460V) + CAPPRE:ULCUL + CAPPRM:ASME + FREQ:60HZ) + IDRY:N + MODEL:GA110VP_16

Ref	Part Number	Qty	Name	Validity	EL
	1088 0039 07	3	TERMINAL	**(20/07/2017 - 20/08/2018)** ((((CAPPRM:AS1210 , CAPPRM:CE , CAPPRM:MHLW , CAPPRM:MOM) + MOVOL:400V , CAPPRM:CE + MOVOL:500V , CAPPRM:MHLW + MOVOL:200V) + FREQ:50HZ , ((MOVOL:200V , MOVOL:460V) + CAPPRM:MHLW , (MOVOL:380V , MOVOL:460V) + CAPPRM:ASME) + FREQ:60HZ) + CAPPRE:IEC , (MOVOL:230V , MOVOL:460V , MOVOL:575V) + CAPPRE:ULCUL + CAPPRM:ASME + FREQ:60HZ) + COOL:AIR **(21/08/2018 - 11/12/2018)** ((((CAPPRM:AS1210 , CAPPRM:CE , CAPPRM:MHLW , CAPPRM:MOM) + MOVOL:400V , CAPPRM:CE + COOL:AIR + MOVOL:500V) + FREQ:50HZ , ((MOVOL:380V , MOVOL:460V) + CAPPRM:ASME , CAPPRM:MHLW + MOVOL:460V) + FREQ:60HZ , CAPPRM:MHLW + COOL:AIR + MOVOL:200V) + CAPPRE:IEC , ((MOVOL:230V , MOVOL:575V) + COOL:AIR , MOVOL:460V) + CAPPRE:ULCUL + CAPPRM:ASME + FREQ:60HZ)	X152
	1088 0039 05	1	PLATE	**(20/07/2017 - 20/08/2018)** ((((CAPPRM:AS1210 , CAPPRM:CE , CAPPRM:MHLW , CAPPRM:MOM) + MOVOL:400V , CAPPRM:CE + MOVOL:500V , CAPPRM:MHLW + MOVOL:200V) + FREQ:50HZ , ((MOVOL:200V , MOVOL:460V) + CAPPRM:MHLW , (MOVOL:380V , MOVOL:460V) + CAPPRM:ASME) + FREQ:60HZ) + CAPPRE:IEC , (MOVOL:230V , MOVOL:460V , MOVOL:575V) + CAPPRE:ULCUL + CAPPRM:ASME + FREQ:60HZ) + COOL:AIR **(21/08/2018 - 11/12/2018)** ((((CAPPRM:AS1210 , CAPPRM:CE , CAPPRM:MHLW , CAPPRM:MOM) + MOVOL:400V , CAPPRM:CE + COOL:AIR + MOVOL:500V) + FREQ:50HZ , ((MOVOL:380V , MOVOL:460V) + CAPPRM:ASME , CAPPRM:MHLW + MOVOL:460V) + FREQ:60HZ , CAPPRM:MHLW + COOL:AIR + MOVOL:200V) + CAPPRE:IEC , ((MOVOL:230V , MOVOL:575V) + COOL:AIR , MOVOL:460V) + CAPPRE:ULCUL + CAPPRM:ASME + FREQ:60HZ)	X152
	1088 0039 26	1	CONNECTOR	**(20/07/2017 - 20/08/2018)** ((((CAPPRM:AS1210 , CAPPRM:CE , CAPPRM:MHLW , CAPPRM:MOM) + MOVOL:400V , CAPPRM:CE + MOVOL:500V , CAPPRM:MHLW + MOVOL:200V) + FREQ:50HZ , ((MOVOL:200V , MOVOL:460V) + CAPPRM:MHLW , (MOVOL:380V , MOVOL:460V) + CAPPRM:ASME) + FREQ:60HZ) + CAPPRE:IEC , (MOVOL:230V , MOVOL:460V , MOVOL:575V) + CAPPRE:ULCUL + CAPPRM:ASME + FREQ:60HZ) + COOL:AIR **(21/08/2018 - 11/12/2018)** ((((CAPPRM:AS1210 , CAPPRM:CE , CAPPRM:MHLW , CAPPRM:MOM) + MOVOL:400V , CAPPRM:CE + COOL:AIR + MOVOL:500V) + FREQ:50HZ , ((MOVOL:380V , MOVOL:460V) + CAPPRM:ASME , CAPPRM:MHLW + MOVOL:460V) + FREQ:60HZ , CAPPRM:MHLW + COOL:AIR + MOVOL:200V) + CAPPRE:IEC , ((MOVOL:230V , MOVOL:575V) + COOL:AIR , MOVOL:460V) + CAPPRE:ULCUL + CAPPRM:ASME + FREQ:60HZ)	
	Electrical legend:	X152 (remove coding pin 1,3)			

Legend:

CAPPRE:IEC - Component approval electrical:IEC
CAPPRM:ASME - Component approval mechanical:ASME
CAPPRM:MOM - Component approval mechanical:MOM
FREQ:60HZ - Frequency:60 Hz
MOVOL:200V - Supply voltage:200 V
MOVOL:400V - Supply voltage:400 V
MOVOL:575V - Supply voltage:575 V
CAPPRE:ULCUL - Component approval electrical:UL/cUL
CAPPRM:CE - Component approval mechanical:CE
COOL:AIR - Cooling:Air cooled
IDRY:N - Integrated dryer:No
MOVOL:230V - Supply voltage:230 V
MOVOL:460V - Supply voltage:460 V
CAPPRM:AS1210 - Component approval mechanical:AS1210
CAPPRM:MHLW - Component approval mechanical:MHLW
FREQ:50HZ - Frequency:50 Hz
MODEL:GA110VP_16 - Model:GA 110VSD+
MOVOL:380V - Supply voltage:380 V
MOVOL:500V - Supply voltage:500 V

21.23 - Cubicle components GA 110 VSD+ - (200V-380V-460V/60Hz - IEC, 230V-460V-575V/60Hz - UL-cUL, 200V-400V-500V/50Hz - IEC) - Pack (20/07/2017 - 11/12/2018)

((((CAPPRM:AS1210 , CAPPRM:CE , CAPPRM:MHLW , CAPPRM:MOM) + MOVOL:400V , CAPPRM:CE + COOL:AIR + MOVOL:500V) + FREQ:50HZ , ((MOVOL:380V , MOVOL:460V) + CAPPRM:ASME , CAPPRM:MHLW + MOVOL:460V) + FREQ:60HZ) + CAPPRE:IEC , (COOL:AIR + MOVOL:575V , MOVOL:460V) + CAPPRE:ULCUL + CAPPRM:ASME + FREQ:60HZ) + IDRY:N + MODEL:GA110VP_16

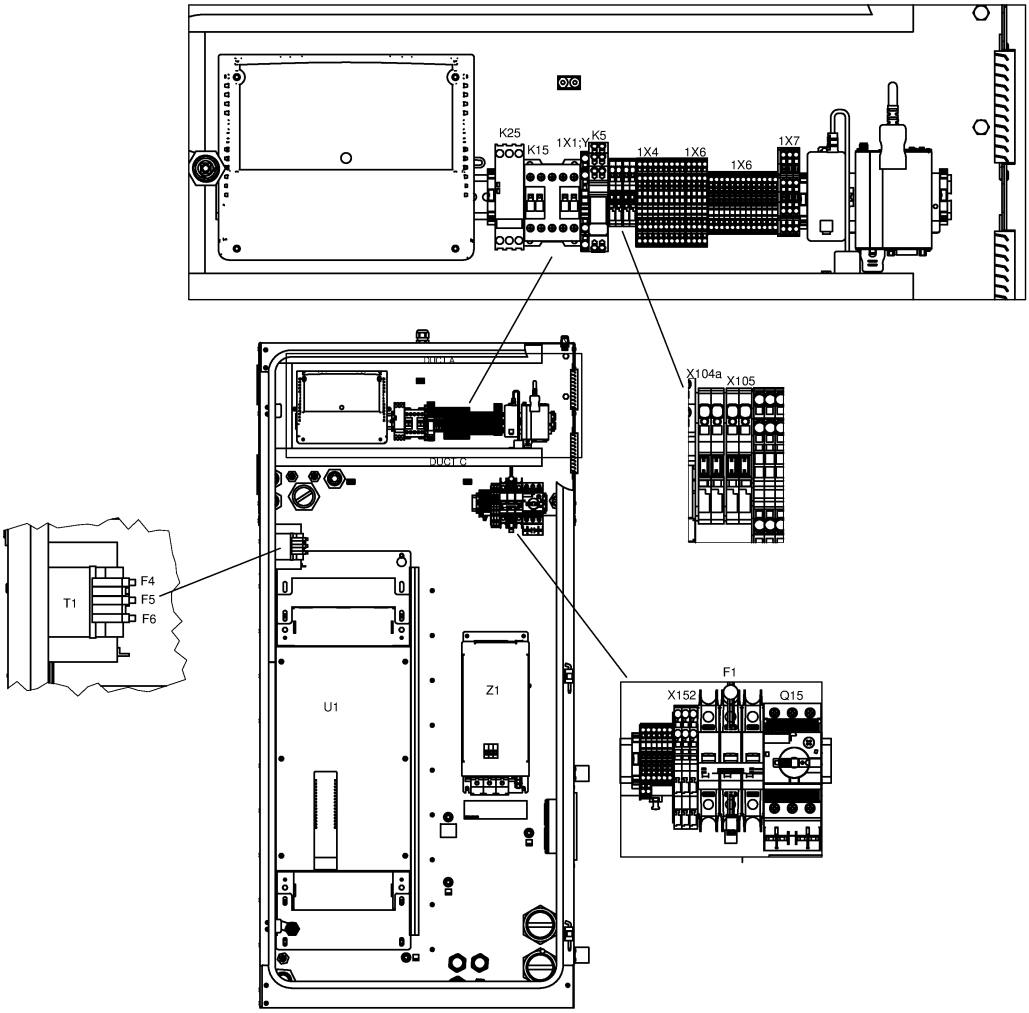

21.23 - Cubicle components GA 110 VSD+ - (200V-380V-460V/60Hz - IEC, 230V-460V-575V/60Hz - UL-cUL, 200V-400V-500V/50Hz - IEC) - Pack (20/07/2017 - 11/12/2018)

((((CAPPRM:AS1210 , CAPPRM:CE , CAPPRM:MHLW , CAPPRM:MOM) + MOVOL:400V , CAPPRM:CE + COOL:AIR + MOVOL:500V) + FREQ:50HZ , ((MOVOL:380V , MOVOL:460V) + CAPPRM:ASME , CAPPRM:MHLW + MOVOL:460V) + FREQ:60HZ) + CAPPRE:IEC , (COOL:AIR + MOVOL:575V , MOVOL:460V) + CAPPRE:ULCUL + CAPPRM:ASME + FREQ:60HZ) + IDRY:N + MODEL:GA110VP_16

Ref	Part Number	Qty	Name	Validity	EL
	1088 0037 99	4	PIN	**(20/07/2017 - 20/08/2018)** ((((CAPPRM:AS1210 , CAPPRM:CE , CAPPRM:MHLW , CAPPRM:MOM) + MOVOL:400V , CAPPRM:CE + MOVOL:500V , CAPPRM:MHLW + MOVOL:200V) + FREQ:50HZ , ((MOVOL:200V , MOVOL:460V) + CAPPRM:MHLW , (MOVOL:380V , MOVOL:460V) + CAPPRM:ASME) + FREQ:60HZ) + CAPPRE:IEC , (MOVOL:230V , MOVOL:460V , MOVOL:575V) + CAPPRE:ULCUL + CAPPRM:ASME + FREQ:60HZ) + COOL:AIR **(21/08/2018 - 11/12/2018)** ((((CAPPRM:AS1210 , CAPPRM:CE , CAPPRM:MHLW , CAPPRM:MOM) + MOVOL:400V , CAPPRM:CE + COOL:AIR + MOVOL:500V) + FREQ:50HZ , ((MOVOL:380V , MOVOL:460V) + CAPPRM:ASME , CAPPRM:MHLW + MOVOL:460V) + FREQ:60HZ , CAPPRM:MHLW + COOL:AIR + MOVOL:200V) + CAPPRE:IEC , ((MOVOL:230V , MOVOL:575V) + COOL:AIR , MOVOL:460V) + CAPPRE:ULCUL + CAPPRM:ASME + FREQ:60HZ)	X152:1; 3
	~~1088 0031 81~~	7	END STOP BRACKET	**(20/07/2017 - 20/08/2018)** ((((CAPPRM:AS1210 , CAPPRM:CE , CAPPRM:MHLW , CAPPRM:MOM) + MOVOL:400V , CAPPRM:CE + MOVOL:500V , CAPPRM:MHLW + MOVOL:200V) + FREQ:50HZ , ((MOVOL:200V , MOVOL:460V) + CAPPRM:MHLW , (MOVOL:380V , MOVOL:460V) + CAPPRM:ASME) + FREQ:60HZ) + CAPPRE:IEC , (MOVOL:230V , MOVOL:460V , MOVOL:575V) + CAPPRE:ULCUL + CAPPRM:ASME + FREQ:60HZ) + COOL:AIR **(21/08/2018 - 11/12/2018)** ((((CAPPRM:AS1210 , CAPPRM:CE , CAPPRM:MHLW , CAPPRM:MOM) + MOVOL:400V , CAPPRM:CE + COOL:AIR + MOVOL:500V) + FREQ:50HZ , ((MOVOL:380V , MOVOL:460V) + CAPPRM:ASME , CAPPRM:MHLW + MOVOL:460V) + FREQ:60HZ , CAPPRM:MHLW + COOL:AIR + MOVOL:200V) + CAPPRE:IEC , ((MOVOL:230V , MOVOL:575V) + COOL:AIR , MOVOL:460V) + CAPPRE:ULCUL + CAPPRM:ASME + FREQ:60HZ)	
	Electrical legend:	Connector/terminal rail			
	Substituted by:	1089 0577 82 - END RETAINER (quantity: 1)			
	1088 0039 38	2	TERMINAL	**(20/07/2017 - 20/08/2018)** ((((CAPPRM:AS1210 , CAPPRM:CE , CAPPRM:MHLW , CAPPRM:MOM) + MOVOL:400V , CAPPRM:CE + MOVOL:500V , CAPPRM:MHLW + MOVOL:200V) + FREQ:50HZ , ((MOVOL:200V , MOVOL:460V) + CAPPRM:MHLW , (MOVOL:380V , MOVOL:460V) + CAPPRM:ASME) + FREQ:60HZ) + CAPPRE:IEC , (MOVOL:230V , MOVOL:460V , MOVOL:575V) + CAPPRE:ULCUL + CAPPRM:ASME + FREQ:60HZ) + COOL:AIR **(21/08/2018 - 11/12/2018)** ((((CAPPRM:AS1210 , CAPPRM:CE , CAPPRM:MHLW , CAPPRM:MOM) + MOVOL:400V , CAPPRM:CE + COOL:AIR + MOVOL:500V) + FREQ:50HZ , ((MOVOL:380V , MOVOL:460V) + CAPPRM:ASME , CAPPRM:MHLW + MOVOL:460V) + FREQ:60HZ , CAPPRM:MHLW + COOL:AIR + MOVOL:200V) + CAPPRE:IEC , ((MOVOL:230V , MOVOL:575V) + COOL:AIR , MOVOL:460V) + CAPPRE:ULCUL + CAPPRM:ASME + FREQ:60HZ)	1X11:2,5

Legend:

CAPPRE:IEC - Component approval electrical:IEC
CAPPRM:ASME - Component approval mechanical:ASME
CAPPRM:MOM - Component approval mechanical:MOM
FREQ:60HZ - Frequency:60 Hz
MOVOL:200V - Supply voltage:200 V
MOVOL:400V - Supply voltage:400 V
MOVOL:575V - Supply voltage:575 V
CAPPRE:ULCUL - Component approval electrical:UL/cUL
CAPPRM:CE - Component approval mechanical:CE
COOL:AIR - Cooling:Air cooled
IDRY:N - Integrated dryer:No
MOVOL:230V - Supply voltage:230 V
MOVOL:460V - Supply voltage:460 V
CAPPRM:AS1210 - Component approval mechanical:AS1210
CAPPRM:MHLW - Component approval mechanical:MHLW
FREQ:50HZ - Frequency:50 Hz
MODEL:GA110VP_16 - Model:GA 110VSD+
MOVOL:380V - Supply voltage:380 V
MOVOL:500V - Supply voltage:500 V

21.23 - Cubicle components GA 110 VSD+ - (200V-380V-460V/60Hz - IEC, 230V-460V-575V/60Hz - UL-cUL, 200V-400V-500V/50Hz - IEC) - Pack (20/07/2017 - 11/12/2018)

((((CAPPRM:AS1210 , CAPPRM:CE , CAPPRM:MHLW , CAPPRM:MOM) + MOVOL:400V , CAPPRM:CE + COOL:AIR + MOVOL:500V) + FREQ:50HZ , ((MOVOL:380V , MOVOL:460V) + CAPPRM:ASME , CAPPRM:MHLW + MOVOL:460V) + FREQ:60HZ) + CAPPRE:IEC , (COOL:AIR + MOVOL:575V , MOVOL:460V) + CAPPRE:ULCUL + CAPPRM:ASME + FREQ:60HZ) + IDRY:N + MODEL:GA110VP_16

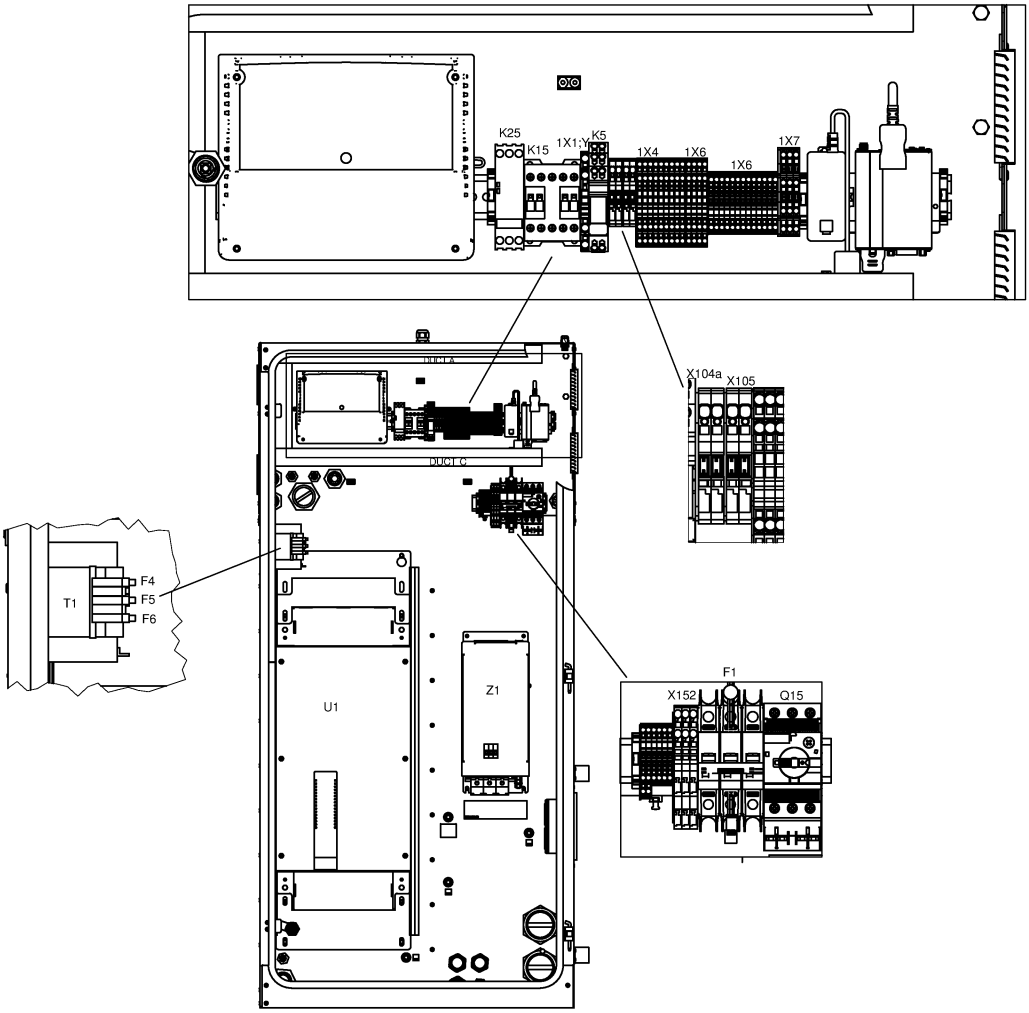

21.23 - Cubicle components GA 110 VSD+ - (200V-380V-460V/60Hz - IEC, 230V-460V-575V/60Hz - UL-cUL, 200V-400V-500V/50Hz - IEC) - Pack (20/07/2017 - 11/12/2018)

((((CAPPRM:AS1210 , CAPPRM:CE , CAPPRM:MHLW , CAPPRM:MOM) + MOVOL:400V , CAPPRM:CE + COOL:AIR + MOVOL:500V) + FREQ:50HZ , ((MOVOL:380V , MOVOL:460V) + CAPPRM:ASME , CAPPRM:MHLW + MOVOL:460V) + FREQ:60HZ) + CAPPRE:IEC , (COOL:AIR + MOVOL:575V , MOVOL:460V) + CAPPRE:ULCUL + CAPPRM:ASME + FREQ:60HZ) + IDRY:N + MODEL:GA110VP_16

Ref	Part Number	Qty	Name	Validity	EL
	1088 0039 40	1	PLATE	**(20/07/2017 - 20/08/2018)** ((((CAPPRM:AS1210 , CAPPRM:CE , CAPPRM:MHLW , CAPPRM:MOM) + MOVOL:400V , CAPPRM:CE + MOVOL:500V , CAPPRM:MHLW + MOVOL:200V) + FREQ:50HZ , ((MOVOL:200V , MOVOL:460V) + CAPPRM:MHLW , (MOVOL:380V , MOVOL:460V) + CAPPRM:ASME) + FREQ:60HZ) + CAPPRE:IEC , (MOVOL:230V , MOVOL:460V , MOVOL:575V) + CAPPRE:ULCUL + CAPPRM:ASME + FREQ:60HZ) + COOL:AIR **(21/08/2018 - 11/12/2018)** ((((CAPPRM:AS1210 , CAPPRM:CE , CAPPRM:MHLW , CAPPRM:MOM) + MOVOL:400V , CAPPRM:CE + COOL:AIR + MOVOL:500V) + FREQ:50HZ , ((MOVOL:380V , MOVOL:460V) + CAPPRM:ASME , CAPPRM:MHLW + MOVOL:460V) + FREQ:60HZ , CAPPRM:MHLW + COOL:AIR + MOVOL:200V) + CAPPRE:IEC , ((MOVOL:230V , MOVOL:575V) + COOL:AIR , MOVOL:460V) + CAPPRE:ULCUL + CAPPRM:ASME + FREQ:60HZ)	1X11
	1088 0039 34	4	TERMINAL	**(20/07/2017 - 20/08/2018)** ((((CAPPRM:AS1210 , CAPPRM:CE , CAPPRM:MHLW , CAPPRM:MOM) + MOVOL:400V , CAPPRM:CE + MOVOL:500V , CAPPRM:MHLW + MOVOL:200V) + FREQ:50HZ , ((MOVOL:200V , MOVOL:460V) + CAPPRM:MHLW , (MOVOL:380V , MOVOL:460V) + CAPPRM:ASME) + FREQ:60HZ) + CAPPRE:IEC , (MOVOL:230V , MOVOL:460V , MOVOL:575V) + CAPPRE:ULCUL + CAPPRM:ASME + FREQ:60HZ) + COOL:AIR **(21/08/2018 - 11/12/2018)** ((((CAPPRM:AS1210 , CAPPRM:CE , CAPPRM:MHLW , CAPPRM:MOM) + MOVOL:400V , CAPPRM:CE + COOL:AIR + MOVOL:500V) + FREQ:50HZ , ((MOVOL:380V , MOVOL:460V) + CAPPRM:ASME , CAPPRM:MHLW + MOVOL:460V) + FREQ:60HZ , CAPPRM:MHLW + COOL:AIR + MOVOL:200V) + CAPPRE:IEC , ((MOVOL:230V , MOVOL:575V) + COOL:AIR , MOVOL:460V) + CAPPRE:ULCUL + CAPPRM:ASME + FREQ:60HZ)	
	Electrical legend:	1X11:30,301,34			
	1088 0039 35	1	PLATE	**(20/07/2017 - 20/08/2018)** ((((CAPPRM:AS1210 , CAPPRM:CE , CAPPRM:MHLW , CAPPRM:MOM) + MOVOL:400V , CAPPRM:CE + MOVOL:500V , CAPPRM:MHLW + MOVOL:200V) + FREQ:50HZ , ((MOVOL:200V , MOVOL:460V) + CAPPRM:MHLW , (MOVOL:380V , MOVOL:460V) + CAPPRM:ASME) + FREQ:60HZ) + CAPPRE:IEC , (MOVOL:230V , MOVOL:460V , MOVOL:575V) + CAPPRE:ULCUL + CAPPRM:ASME + FREQ:60HZ) + COOL:AIR **(21/08/2018 - 11/12/2018)** ((((CAPPRM:AS1210 , CAPPRM:CE , CAPPRM:MHLW , CAPPRM:MOM) + MOVOL:400V , CAPPRM:CE + COOL:AIR + MOVOL:500V) + FREQ:50HZ , ((MOVOL:380V , MOVOL:460V) + CAPPRM:ASME , CAPPRM:MHLW + MOVOL:460V) + FREQ:60HZ , CAPPRM:MHLW + COOL:AIR + MOVOL:200V) + CAPPRE:IEC , ((MOVOL:230V , MOVOL:575V) + COOL:AIR , MOVOL:460V) + CAPPRE:ULCUL + CAPPRM:ASME + FREQ:60HZ)	1X11

Legend:

CAPPRE:IEC - Component approval electrical:IEC
CAPPRM:ASME - Component approval mechanical:ASME
CAPPRM:MOM - Component approval mechanical:MOM
FREQ:60HZ - Frequency:60 Hz
MOVOL:200V - Supply voltage:200 V
MOVOL:400V - Supply voltage:400 V
MOVOL:575V - Supply voltage:575 V
CAPPRE:ULCUL - Component approval electrical:UL/cUL
CAPPRM:CE - Component approval mechanical:CE
COOL:AIR - Cooling:Air cooled
IDRY:N - Integrated dryer:No
MOVOL:230V - Supply voltage:230 V
MOVOL:460V - Supply voltage:460 V
CAPPRM:AS1210 - Component approval mechanical:AS1210
CAPPRM:MHLW - Component approval mechanical:MHLW
FREQ:50HZ - Frequency:50 Hz
MODEL:GA110VP_16 - Model:GA 110VSD+
MOVOL:380V - Supply voltage:380 V
MOVOL:500V - Supply voltage:500 V

21.23 - Cubicle components GA 110 VSD+ - (200V-380V-460V/60Hz - IEC, 230V-460V-575V/60Hz - UL-cUL, 200V-400V-500V/50Hz - IEC) - Pack (20/07/2017 - 11/12/2018)

((((CAPPRM:AS1210 , CAPPRM:CE , CAPPRM:MHLW , CAPPRM:MOM) + MOVOL:400V , CAPPRM:CE + COOL:AIR + MOVOL:500V) + FREQ:50HZ , ((MOVOL:380V , MOVOL:460V) + CAPPRM:ASME , CAPPRM:MHLW + MOVOL:460V) + FREQ:60HZ) + CAPPRE:IEC , (COOL:AIR + MOVOL:575V , MOVOL:460V) + CAPPRE:ULCUL + CAPPRM:ASME + FREQ:60HZ) + IDRY:N + MODEL:GA110VP_16

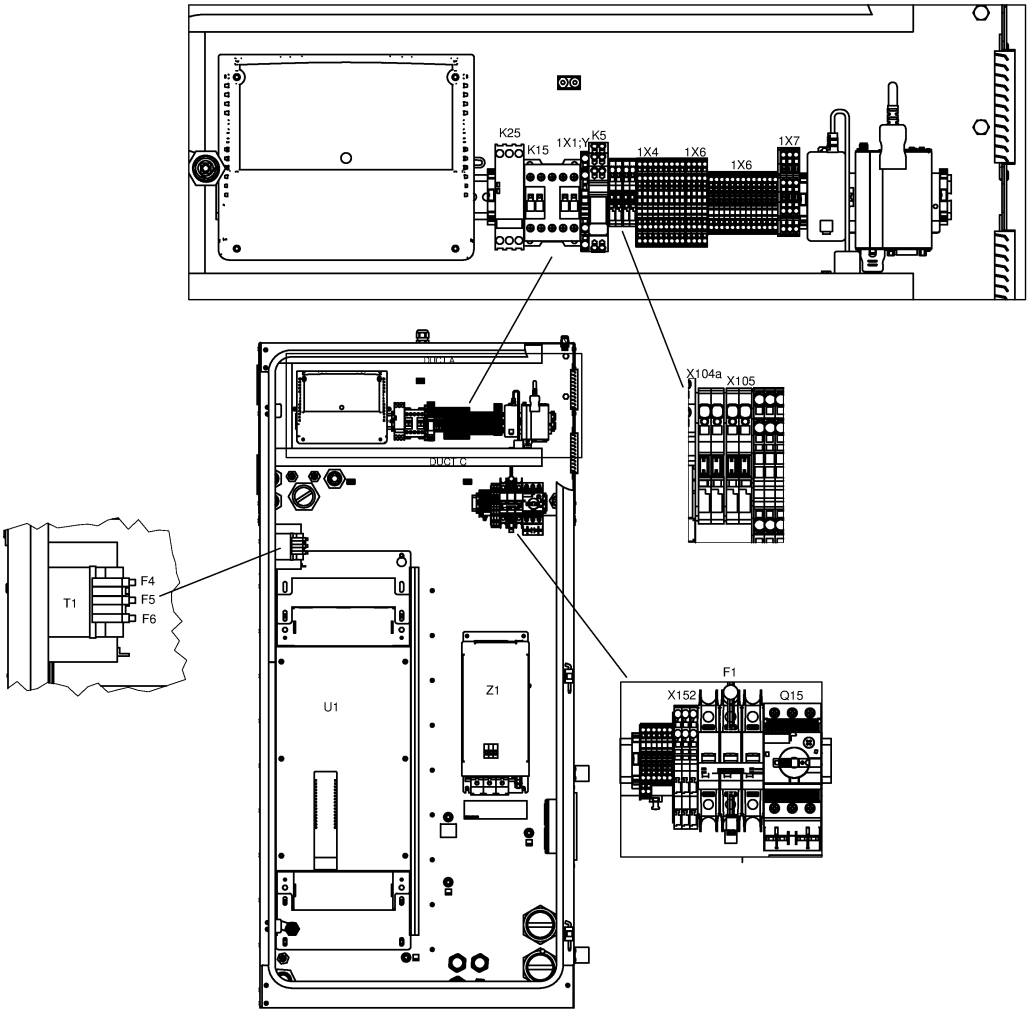

21.23 - Cubicle components GA 110 VSD+ - (200V-380V-460V/60Hz - IEC, 230V-460V-575V/60Hz - UL-cUL, 200V-400V-500V/50Hz - IEC) - Pack (20/07/2017 - 11/12/2018)

((((CAPPRM:AS1210 , CAPPRM:CE , CAPPRM:MHLW , CAPPRM:MOM) + MOVOL:400V , CAPPRM:CE + COOL:AIR + MOVOL:500V) + FREQ:50HZ , ((MOVOL:380V , MOVOL:460V) + CAPPRM:ASME , CAPPRM:MHLW + MOVOL:460V) + FREQ:60HZ) + CAPPRE:IEC , (COOL:AIR + MOVOL:575V , MOVOL:460V) + CAPPRE:ULCUL + CAPPRM:ASME + FREQ:60HZ) + IDRY:N + MODEL:GA110VP_16

Ref	Part Number	Qty	Name	Validity	EL
	1088 0039 04	2	TERMINAL	**(20/07/2017 - 20/08/2018)** ((((CAPPRM:AS1210 , CAPPRM:CE , CAPPRM:MHLW , CAPPRM:MOM) + MOVOL:400V , CAPPRM:CE + MOVOL:500V , CAPPRM:MHLW + MOVOL:200V) + FREQ:50HZ , ((MOVOL:200V , MOVOL:460V) + CAPPRM:MHLW , (MOVOL:380V , MOVOL:460V) + CAPPRM:ASME) + FREQ:60HZ) + CAPPRE:IEC , (MOVOL:230V , MOVOL:460V , MOVOL:575V) + CAPPRE:ULCUL + CAPPRM:ASME + FREQ:60HZ) + COOL:AIR **(21/08/2018 - 11/12/2018)** ((((CAPPRM:AS1210 , CAPPRM:CE , CAPPRM:MHLW , CAPPRM:MOM) + MOVOL:400V , CAPPRM:CE + COOL:AIR + MOVOL:500V) + FREQ:50HZ , ((MOVOL:380V , MOVOL:460V) + CAPPRM:ASME , CAPPRM:MHLW + MOVOL:460V) + FREQ:60HZ , CAPPRM:MHLW + COOL:AIR + MOVOL:200V) + CAPPRE:IEC , ((MOVOL:230V , MOVOL:575V) + COOL:AIR , MOVOL:460V) + CAPPRE:ULCUL + CAPPRM:ASME + FREQ:60HZ)	X104a
	1088 0037 99	2	PIN	**(20/07/2017 - 20/08/2018)** ((((CAPPRM:AS1210 , CAPPRM:CE , CAPPRM:MHLW , CAPPRM:MOM) + MOVOL:400V , CAPPRM:CE + MOVOL:500V , CAPPRM:MHLW + MOVOL:200V) + FREQ:50HZ , ((MOVOL:200V , MOVOL:460V) + CAPPRM:MHLW , (MOVOL:380V , MOVOL:460V) + CAPPRM:ASME) + FREQ:60HZ) + CAPPRE:IEC , (MOVOL:230V , MOVOL:460V , MOVOL:575V) + CAPPRE:ULCUL + CAPPRM:ASME + FREQ:60HZ) + COOL:AIR **(21/08/2018 - 11/12/2018)** ((((CAPPRM:AS1210 , CAPPRM:CE , CAPPRM:MHLW , CAPPRM:MOM) + MOVOL:400V , CAPPRM:CE + COOL:AIR + MOVOL:500V) + FREQ:50HZ , ((MOVOL:380V , MOVOL:460V) + CAPPRM:ASME , CAPPRM:MHLW + MOVOL:460V) + FREQ:60HZ , CAPPRM:MHLW + COOL:AIR + MOVOL:200V) + CAPPRE:IEC , ((MOVOL:230V , MOVOL:575V) + COOL:AIR , MOVOL:460V) + CAPPRE:ULCUL + CAPPRM:ASME + FREQ:60HZ)	X104a/X105
	1088 0039 02	1	PLATE	**(20/07/2017 - 20/08/2018)** ((((CAPPRM:AS1210 , CAPPRM:CE , CAPPRM:MHLW , CAPPRM:MOM) + MOVOL:400V , CAPPRM:CE + MOVOL:500V , CAPPRM:MHLW + MOVOL:200V) + FREQ:50HZ , ((MOVOL:200V , MOVOL:460V) + CAPPRM:MHLW , (MOVOL:380V , MOVOL:460V) + CAPPRM:ASME) + FREQ:60HZ) + CAPPRE:IEC , (MOVOL:230V , MOVOL:460V , MOVOL:575V) + CAPPRE:ULCUL + CAPPRM:ASME + FREQ:60HZ) + COOL:AIR **(21/08/2018 - 11/12/2018)** ((((CAPPRM:AS1210 , CAPPRM:CE , CAPPRM:MHLW , CAPPRM:MOM) + MOVOL:400V , CAPPRM:CE + COOL:AIR + MOVOL:500V) + FREQ:50HZ , ((MOVOL:380V , MOVOL:460V) + CAPPRM:ASME , CAPPRM:MHLW + MOVOL:460V) + FREQ:60HZ , CAPPRM:MHLW + COOL:AIR + MOVOL:200V) + CAPPRE:IEC , ((MOVOL:230V , MOVOL:575V) + COOL:AIR , MOVOL:460V) + CAPPRE:ULCUL + CAPPRM:ASME + FREQ:60HZ)	X104a

Legend:

CAPPRE:IEC - Component approval electrical:IEC
CAPPRE:ULCUL - Component approval electrical:UL/cUL
CAPPRM:AS1210 - Component approval mechanical:AS1210
CAPPRM:ASME - Component approval mechanical:ASME
CAPPRM:CE - Component approval mechanical:CE
CAPPRM:MHLW - Component approval mechanical:MHLW
CAPPRM:MOM - Component approval mechanical:MOM
COOL:AIR - Cooling:Air cooled
FREQ:50HZ - Frequency:50 Hz
FREQ:60HZ - Frequency:60 Hz
IDRY:N - Integrated dryer:No
MODEL:GA110VP_16 - Model:GA 110VSD+
MOVOL:200V - Supply voltage:200 V
MOVOL:230V - Supply voltage:230 V
MOVOL:380V - Supply voltage:380 V
MOVOL:400V - Supply voltage:400 V
MOVOL:460V - Supply voltage:460 V
MOVOL:500V - Supply voltage:500 V
MOVOL:575V - Supply voltage:575 V

21.23 - Cubicle components GA 110 VSD+ - (200V-380V-460V/60Hz - IEC, 230V-460V-575V/60Hz - UL-cUL, 200V-400V-500V/50Hz - IEC) - Pack (20/07/2017 - 11/12/2018)

((((CAPPRM:AS1210 , CAPPRM:CE , CAPPRM:MHLW , CAPPRM:MOM) + MOVOL:400V , CAPPRM:CE + COOL:AIR + MOVOL:500V) + FREQ:50HZ , ((MOVOL:380V , MOVOL:460V) + CAPPRM:ASME , CAPPRM:MHLW + MOVOL:460V) + FREQ:60HZ) + CAPPRE:IEC , (COOL:AIR + MOVOL:575V , MOVOL:460V) + CAPPRE:ULCUL + CAPPRM:ASME + FREQ:60HZ) + IDRY:N + MODEL:GA110VP_16

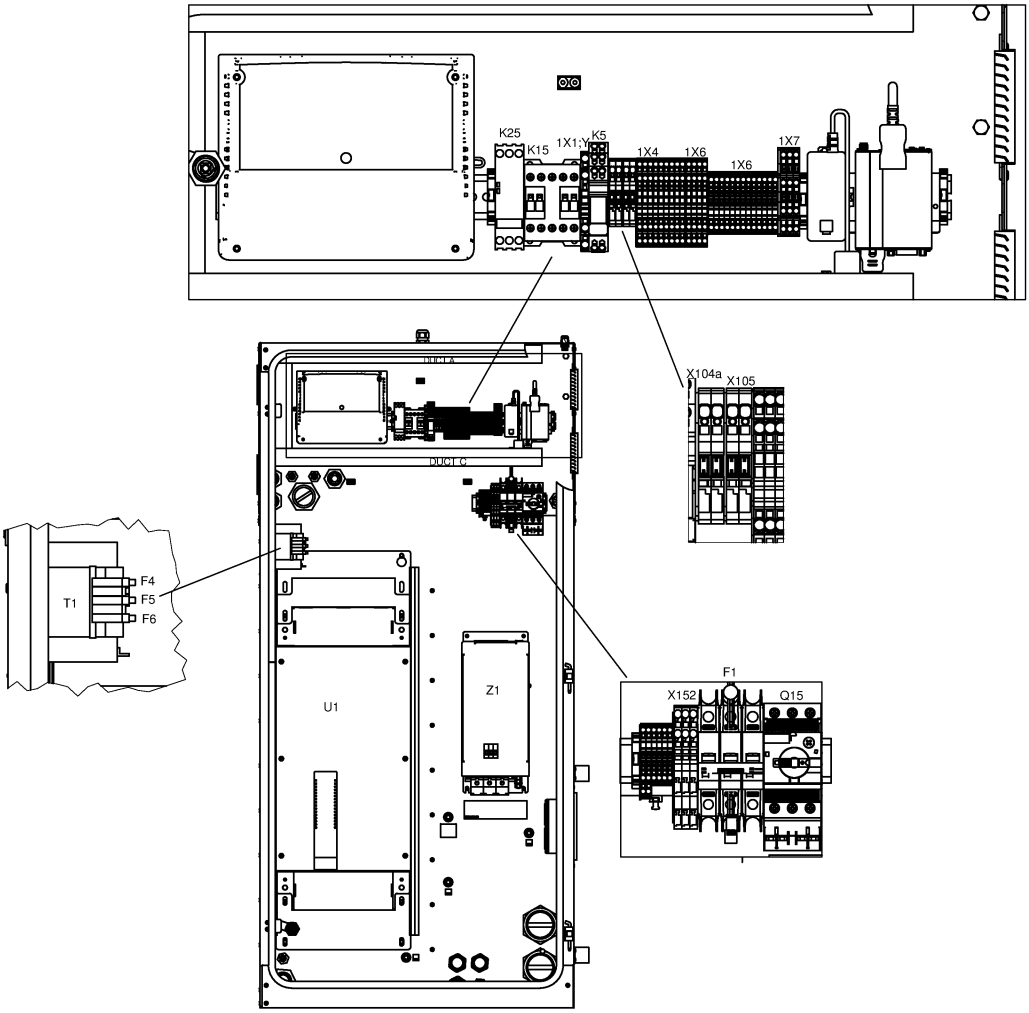

21.23 - Cubicle components GA 110 VSD+ - (200V-380V-460V/60Hz - IEC, 230V-460V-575V/60Hz - UL-cUL, 200V-400V-500V/50Hz - IEC) - Pack (20/07/2017 - 11/12/2018)

((((CAPPRM:AS1210 , CAPPRM:CE , CAPPRM:MHLW , CAPPRM:MOM) + MOVOL:400V , CAPPRM:CE + COOL:AIR + MOVOL:500V) + FREQ:50HZ , ((MOVOL:380V , MOVOL:460V) + CAPPRM:ASME , CAPPRM:MHLW + MOVOL:460V) + FREQ:60HZ) + CAPPRE:IEC , (COOL:AIR + MOVOL:575V , MOVOL:460V) + CAPPRE:ULCUL + CAPPRM:ASME + FREQ:60HZ) + IDRY:N + MODEL:GA110VP_16

Ref	Part Number	Qty	Name	Validity	EL
	1088 0039 04	2	TERMINAL	**(20/07/2017 - 20/08/2018)** ((((CAPPRM:AS1210 , CAPPRM:CE , CAPPRM:MHLW , CAPPRM:MOM) + MOVOL:400V , CAPPRM:CE + MOVOL:500V , CAPPRM:MHLW + MOVOL:200V) + FREQ:50HZ , ((MOVOL:200V , MOVOL:460V) + CAPPRM:MHLW , (MOVOL:380V , MOVOL:460V) + CAPPRM:ASME) + FREQ:60HZ) + CAPPRE:IEC , (MOVOL:230V , MOVOL:460V , MOVOL:575V) + CAPPRE:ULCUL + CAPPRM:ASME + FREQ:60HZ) + COOL:AIR **(21/08/2018 - 11/12/2018)** ((((CAPPRM:AS1210 , CAPPRM:CE , CAPPRM:MHLW , CAPPRM:MOM) + MOVOL:400V , CAPPRM:CE + COOL:AIR + MOVOL:500V) + FREQ:50HZ , ((MOVOL:380V , MOVOL:460V) + CAPPRM:ASME , CAPPRM:MHLW + MOVOL:460V) + FREQ:60HZ , CAPPRM:MHLW + COOL:AIR + MOVOL:200V) + CAPPRE:IEC , ((MOVOL:230V , MOVOL:575V) + COOL:AIR , MOVOL:460V) + CAPPRE:ULCUL + CAPPRM:ASME + FREQ:60HZ)	
	1088 0039 02	1	PLATE	**(20/07/2017 - 20/08/2018)** ((((CAPPRM:AS1210 , CAPPRM:CE , CAPPRM:MHLW , CAPPRM:MOM) + MOVOL:400V , CAPPRM:CE + MOVOL:500V , CAPPRM:MHLW + MOVOL:200V) + FREQ:50HZ , ((MOVOL:200V , MOVOL:460V) + CAPPRM:MHLW , (MOVOL:380V , MOVOL:460V) + CAPPRM:ASME) + FREQ:60HZ) + CAPPRE:IEC , (MOVOL:230V , MOVOL:460V , MOVOL:575V) + CAPPRE:ULCUL + CAPPRM:ASME + FREQ:60HZ) + COOL:AIR **(21/08/2018 - 11/12/2018)** ((((CAPPRM:AS1210 , CAPPRM:CE , CAPPRM:MHLW , CAPPRM:MOM) + MOVOL:400V , CAPPRM:CE + COOL:AIR + MOVOL:500V) + FREQ:50HZ , ((MOVOL:380V , MOVOL:460V) + CAPPRM:ASME , CAPPRM:MHLW + MOVOL:460V) + FREQ:60HZ , CAPPRM:MHLW + COOL:AIR + MOVOL:200V) + CAPPRE:IEC , ((MOVOL:230V , MOVOL:575V) + COOL:AIR , MOVOL:460V) + CAPPRE:ULCUL + CAPPRM:ASME + FREQ:60HZ)	
	1088 0039 34	13	TERMINAL	**(20/07/2017 - 20/08/2018)** ((((CAPPRM:AS1210 , CAPPRM:CE , CAPPRM:MHLW , CAPPRM:MOM) + MOVOL:400V , CAPPRM:CE + MOVOL:500V , CAPPRM:MHLW + MOVOL:200V) + FREQ:50HZ , ((MOVOL:200V , MOVOL:460V) + CAPPRM:MHLW , (MOVOL:380V , MOVOL:460V) + CAPPRM:ASME) + FREQ:60HZ) + CAPPRE:IEC , (MOVOL:230V , MOVOL:460V , MOVOL:575V) + CAPPRE:ULCUL + CAPPRM:ASME + FREQ:60HZ) + COOL:AIR **(21/08/2018 - 11/12/2018)** ((((CAPPRM:AS1210 , CAPPRM:CE , CAPPRM:MHLW , CAPPRM:MOM) + MOVOL:400V , CAPPRM:CE + COOL:AIR + MOVOL:500V) + FREQ:50HZ , ((MOVOL:380V , MOVOL:460V) + CAPPRM:ASME , CAPPRM:MHLW + MOVOL:460V) + FREQ:60HZ , CAPPRM:MHLW + COOL:AIR + MOVOL:200V) + CAPPRE:IEC , ((MOVOL:230V , MOVOL:575V) + COOL:AIR , MOVOL:460V) + CAPPRE:ULCUL + CAPPRM:ASME + FREQ:60HZ)	1X6

Legend:

CAPPRE:IEC - Component approval electrical:IEC
CAPPRM:ASME - Component approval mechanical:ASME
CAPPRM:MOM - Component approval mechanical:MOM
FREQ:60HZ - Frequency:60 Hz
MOVOL:200V - Supply voltage:200 V
MOVOL:400V - Supply voltage:400 V
MOVOL:575V - Supply voltage:575 V
CAPPRE:ULCUL - Component approval electrical:UL/cUL
CAPPRM:CE - Component approval mechanical:CE
COOL:AIR - Cooling:Air cooled
IDRY:N - Integrated dryer:No
MOVOL:230V - Supply voltage:230 V
MOVOL:460V - Supply voltage:460 V
CAPPRM:AS1210 - Component approval mechanical:AS1210
CAPPRM:MHLW - Component approval mechanical:MHLW
FREQ:50HZ - Frequency:50 Hz
MODEL:GA110VP_16 - Model:GA 110VSD+
MOVOL:380V - Supply voltage:380 V
MOVOL:500V - Supply voltage:500 V

21.23 - Cubicle components GA 110 VSD+ - (200V-380V-460V/60Hz - IEC, 230V-460V-575V/60Hz - UL-cUL, 200V-400V-500V/50Hz - IEC) - Pack (20/07/2017 - 11/12/2018)

((((CAPPRM:AS1210 , CAPPRM:CE , CAPPRM:MHLW , CAPPRM:MOM) + MOVOL:400V , CAPPRM:CE + COOL:AIR + MOVOL:500V) + FREQ:50HZ , ((MOVOL:380V , MOVOL:460V) + CAPPRM:ASME , CAPPRM:MHLW + MOVOL:460V) + FREQ:60HZ) + CAPPRE:IEC , (COOL:AIR + MOVOL:575V , MOVOL:460V) + CAPPRE:ULCUL + CAPPRM:ASME + FREQ:60HZ) + IDRY:N + MODEL:GA110VP_16

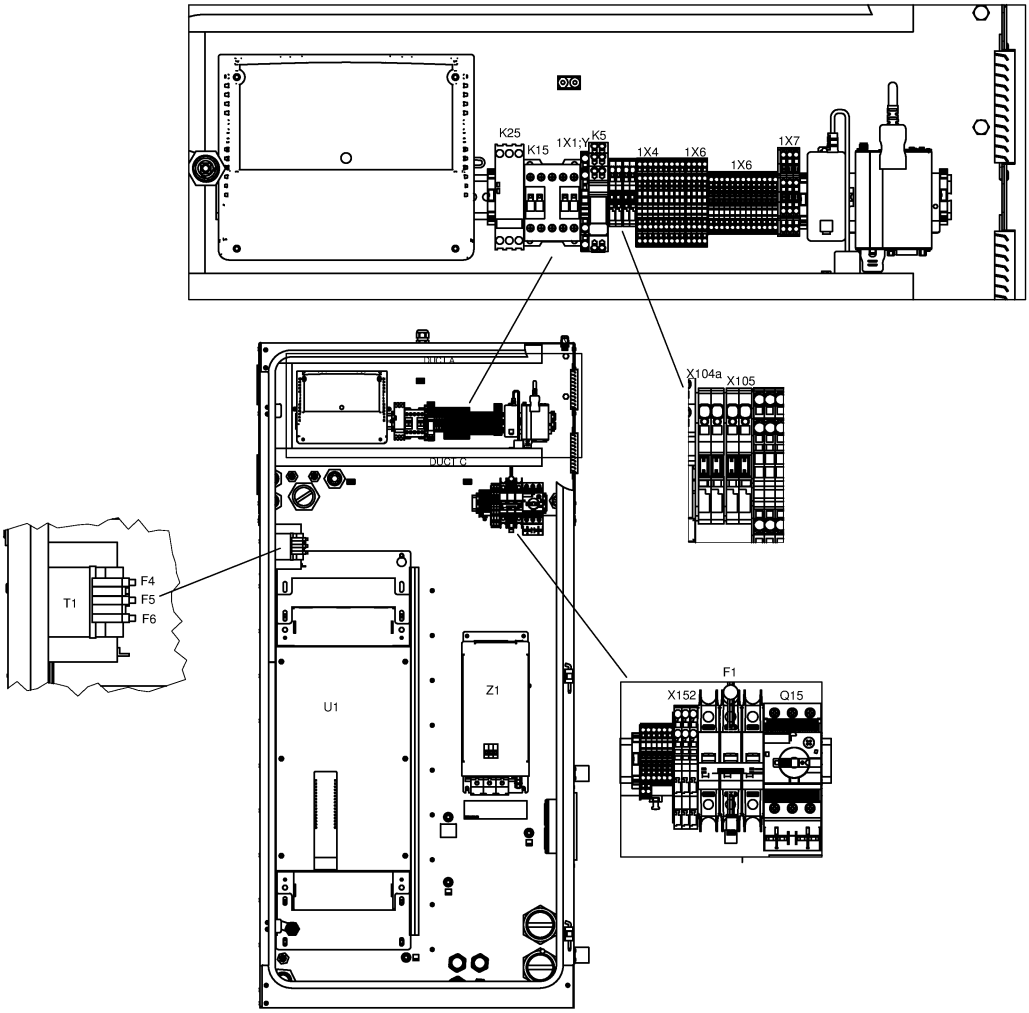

21.23 - Cubicle components GA 110 VSD+ - (200V-380V-460V/60Hz - IEC, 230V-460V-575V/60Hz - UL-cUL, 200V-400V-500V/50Hz - IEC) - Pack (20/07/2017 - 11/12/2018)

((((CAPPRM:AS1210 , CAPPRM:CE , CAPPRM:MHLW , CAPPRM:MOM) + MOVOL:400V , CAPPRM:CE + COOL:AIR + MOVOL:500V) + FREQ:50HZ , ((MOVOL:380V , MOVOL:460V) + CAPPRM:ASME , CAPPRM:MHLW + MOVOL:460V) + FREQ:60HZ) + CAPPRE:IEC , (COOL:AIR + MOVOL:575V , MOVOL:460V) + CAPPRE:ULCUL + CAPPRM:ASME + FREQ:60HZ) + IDRY:N + MODEL:GA110VP_16

Ref	Part Number	Qty	Name	Validity	EL
	1088 0037 69	3	CONNECTOR	**(20/07/2017 - 20/08/2018)** ((((CAPPRM:AS1210 , CAPPRM:CE , CAPPRM:MHLW , CAPPRM:MOM) + MOVOL:400V , CAPPRM:CE + MOVOL:500V , CAPPRM:MHLW + MOVOL:200V) + FREQ:50HZ , ((MOVOL:200V , MOVOL:460V) + CAPPRM:MHLW , (MOVOL:380V , MOVOL:460V) + CAPPRM:ASME) + FREQ:60HZ) + CAPPRE:IEC , (MOVOL:230V , MOVOL:460V , MOVOL:575V) + CAPPRE:ULCUL + CAPPRM:ASME + FREQ:60HZ) + COOL:AIR **(21/08/2018 - 11/12/2018)** ((((CAPPRM:AS1210 , CAPPRM:CE , CAPPRM:MHLW , CAPPRM:MOM) + MOVOL:400V , CAPPRM:CE + COOL:AIR + MOVOL:500V) + FREQ:50HZ , ((MOVOL:380V , MOVOL:460V) + CAPPRM:ASME , CAPPRM:MHLW + MOVOL:460V) + FREQ:60HZ , CAPPRM:MHLW + COOL:AIR + MOVOL:200V) + CAPPRE:IEC , ((MOVOL:230V , MOVOL:575V) + COOL:AIR , MOVOL:460V) + CAPPRE:ULCUL + CAPPRM:ASME + FREQ:60HZ)	1X7
	1088 0039 35	1	PLATE	**(20/07/2017 - 20/08/2018)** ((((CAPPRM:AS1210 , CAPPRM:CE , CAPPRM:MHLW , CAPPRM:MOM) + MOVOL:400V , CAPPRM:CE + MOVOL:500V , CAPPRM:MHLW + MOVOL:200V) + FREQ:50HZ , ((MOVOL:200V , MOVOL:460V) + CAPPRM:MHLW , (MOVOL:380V , MOVOL:460V) + CAPPRM:ASME) + FREQ:60HZ) + CAPPRE:IEC , (MOVOL:230V , MOVOL:460V , MOVOL:575V) + CAPPRE:ULCUL + CAPPRM:ASME + FREQ:60HZ) + COOL:AIR **(21/08/2018 - 11/12/2018)** ((((CAPPRM:AS1210 , CAPPRM:CE , CAPPRM:MHLW , CAPPRM:MOM) + MOVOL:400V , CAPPRM:CE + COOL:AIR + MOVOL:500V) + FREQ:50HZ , ((MOVOL:380V , MOVOL:460V) + CAPPRM:ASME , CAPPRM:MHLW + MOVOL:460V) + FREQ:60HZ , CAPPRM:MHLW + COOL:AIR + MOVOL:200V) + CAPPRE:IEC , ((MOVOL:230V , MOVOL:575V) + COOL:AIR , MOVOL:460V) + CAPPRE:ULCUL + CAPPRM:ASME + FREQ:60HZ)	1X6
	1088 0040 37	1	END PLATE	**(20/07/2017 - 20/08/2018)** ((((CAPPRM:AS1210 , CAPPRM:CE , CAPPRM:MHLW , CAPPRM:MOM) + MOVOL:400V , CAPPRM:CE + MOVOL:500V , CAPPRM:MHLW + MOVOL:200V) + FREQ:50HZ , ((MOVOL:200V , MOVOL:460V) + CAPPRM:MHLW , (MOVOL:380V , MOVOL:460V) + CAPPRM:ASME) + FREQ:60HZ) + CAPPRE:IEC , (MOVOL:230V , MOVOL:460V , MOVOL:575V) + CAPPRE:ULCUL + CAPPRM:ASME + FREQ:60HZ) + COOL:AIR **(21/08/2018 - 11/12/2018)** ((((CAPPRM:AS1210 , CAPPRM:CE , CAPPRM:MHLW , CAPPRM:MOM) + MOVOL:400V , CAPPRM:CE + COOL:AIR + MOVOL:500V) + FREQ:50HZ , ((MOVOL:380V , MOVOL:460V) + CAPPRM:ASME , CAPPRM:MHLW + MOVOL:460V) + FREQ:60HZ , CAPPRM:MHLW + COOL:AIR + MOVOL:200V) + CAPPRE:IEC , ((MOVOL:230V , MOVOL:575V) + COOL:AIR , MOVOL:460V) + CAPPRE:ULCUL + CAPPRM:ASME + FREQ:60HZ)	1X7

Legend:

CAPPRE:IEC - Component approval electrical:IEC
CAPPRE:ULCUL - Component approval electrical:UL/cUL
CAPPRM:AS1210 - Component approval mechanical:AS1210
CAPPRM:ASME - Component approval mechanical:ASME
CAPPRM:CE - Component approval mechanical:CE
CAPPRM:MHLW - Component approval mechanical:MHLW
CAPPRM:MOM - Component approval mechanical:MOM
COOL:AIR - Cooling:Air cooled
FREQ:50HZ - Frequency:50 Hz
FREQ:60HZ - Frequency:60 Hz
IDRY:N - Integrated dryer:No
MODEL:GA110VP_16 - Model:GA 110VSD+
MOVOL:200V - Supply voltage:200 V
MOVOL:230V - Supply voltage:230 V
MOVOL:380V - Supply voltage:380 V
MOVOL:400V - Supply voltage:400 V
MOVOL:460V - Supply voltage:460 V
MOVOL:500V - Supply voltage:500 V
MOVOL:575V - Supply voltage:575 V

21.23 - Cubicle components GA 110 VSD+ - (200V-380V-460V/60Hz - IEC, 230V-460V-575V/60Hz - UL-cUL, 200V-400V-500V/50Hz - IEC) - Pack (20/07/2017 - 11/12/2018)

((((CAPPRM:AS1210 , CAPPRM:CE , CAPPRM:MHLW , CAPPRM:MOM) + MOVOL:400V , CAPPRM:CE + COOL:AIR + MOVOL:500V) + FREQ:50HZ , ((MOVOL:380V , MOVOL:460V) + CAPPRM:ASME , CAPPRM:MHLW + MOVOL:460V) + FREQ:60HZ) + CAPPRE:IEC , (COOL:AIR + MOVOL:575V , MOVOL:460V) + CAPPRE:ULCUL + CAPPRM:ASME + FREQ:60HZ) + IDRY:N + MODEL:GA110VP_16

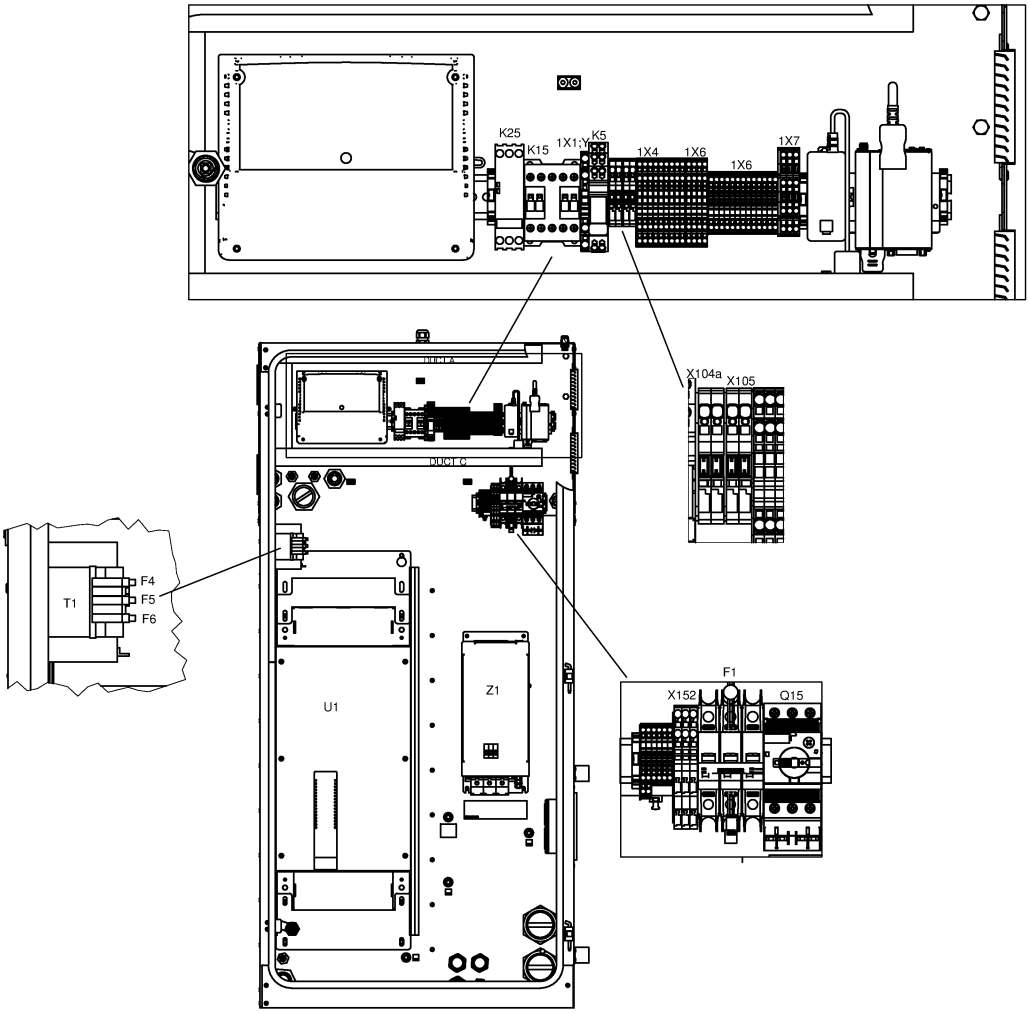

21.23 - Cubicle components GA 110 VSD+ - (200V-380V-460V/60Hz - IEC, 230V-460V-575V/60Hz - UL-cUL, 200V-400V-500V/50Hz - IEC) - Pack (20/07/2017 - 11/12/2018)

((((CAPPRM:AS1210 , CAPPRM:CE , CAPPRM:MHLW , CAPPRM:MOM) + MOVOL:400V , CAPPRM:CE + COOL:AIR + MOVOL:500V) + FREQ:50HZ , ((MOVOL:380V , MOVOL:460V) + CAPPRM:ASME , CAPPRM:MHLW + MOVOL:460V) + FREQ:60HZ) + CAPPRE:IEC , (COOL:AIR + MOVOL:575V , MOVOL:460V) + CAPPRE:ULCUL + CAPPRM:ASME + FREQ:60HZ) + IDRY:N + MODEL:GA110VP_16

Ref	Part Number	Qty	Name	Validity	EL
	1088 0039 36	9	TERMINAL	**(20/07/2017 - 20/08/2018)** ((((CAPPRM:AS1210 , CAPPRM:CE , CAPPRM:MHLW , CAPPRM:MOM) + MOVOL:400V , CAPPRM:CE + MOVOL:500V , CAPPRM:MHLW + MOVOL:200V) + FREQ:50HZ , ((MOVOL:200V , MOVOL:460V) + CAPPRM:MHLW , (MOVOL:380V , MOVOL:460V) + CAPPRM:ASME) + FREQ:60HZ) + CAPPRE:IEC , (MOVOL:230V , MOVOL:460V , MOVOL:575V) + CAPPRE:ULCUL + CAPPRM:ASME + FREQ:60HZ) + COOL:AIR **(21/08/2018 - 11/12/2018)** ((((CAPPRM:AS1210 , CAPPRM:CE , CAPPRM:MHLW , CAPPRM:MOM) + MOVOL:400V , CAPPRM:CE + COOL:AIR + MOVOL:500V) + FREQ:50HZ , ((MOVOL:380V , MOVOL:460V) + CAPPRM:ASME , CAPPRM:MHLW + MOVOL:460V) + FREQ:60HZ , CAPPRM:MHLW + COOL:AIR + MOVOL:200V) + CAPPRE:IEC , ((MOVOL:230V , MOVOL:575V) + COOL:AIR , MOVOL:460V) + CAPPRE:ULCUL + CAPPRM:ASME + FREQ:60HZ)	1X4
	1088 0039 36	4	TERMINAL	**(20/07/2017 - 20/08/2018)** ((((CAPPRM:AS1210 , CAPPRM:CE , CAPPRM:MHLW , CAPPRM:MOM) + MOVOL:400V , CAPPRM:CE + MOVOL:500V , CAPPRM:MHLW + MOVOL:200V) + FREQ:50HZ , ((MOVOL:200V , MOVOL:460V) + CAPPRM:MHLW , (MOVOL:380V , MOVOL:460V) + CAPPRM:ASME) + FREQ:60HZ) + CAPPRE:IEC , (MOVOL:230V , MOVOL:460V , MOVOL:575V) + CAPPRE:ULCUL + CAPPRM:ASME + FREQ:60HZ) + COOL:AIR **(21/08/2018 - 11/12/2018)** ((((CAPPRM:AS1210 , CAPPRM:CE , CAPPRM:MHLW , CAPPRM:MOM) + MOVOL:400V , CAPPRM:CE + COOL:AIR + MOVOL:500V) + FREQ:50HZ , ((MOVOL:380V , MOVOL:460V) + CAPPRM:ASME , CAPPRM:MHLW + MOVOL:460V) + FREQ:60HZ , CAPPRM:MHLW + COOL:AIR + MOVOL:200V) + CAPPRE:IEC , ((MOVOL:230V , MOVOL:575V) + COOL:AIR , MOVOL:460V) + CAPPRE:ULCUL + CAPPRM:ASME + FREQ:60HZ)	1X6
	1088 0039 37	1	END PLATE	**(20/07/2017 - 20/08/2018)** ((((CAPPRM:AS1210 , CAPPRM:CE , CAPPRM:MHLW , CAPPRM:MOM) + MOVOL:400V , CAPPRM:CE + MOVOL:500V , CAPPRM:MHLW + MOVOL:200V) + FREQ:50HZ , ((MOVOL:200V , MOVOL:460V) + CAPPRM:MHLW , (MOVOL:380V , MOVOL:460V) + CAPPRM:ASME) + FREQ:60HZ) + CAPPRE:IEC , (MOVOL:230V , MOVOL:460V , MOVOL:575V) + CAPPRE:ULCUL + CAPPRM:ASME + FREQ:60HZ) + COOL:AIR **(21/08/2018 - 11/12/2018)** ((((CAPPRM:AS1210 , CAPPRM:CE , CAPPRM:MHLW , CAPPRM:MOM) + MOVOL:400V , CAPPRM:CE + COOL:AIR + MOVOL:500V) + FREQ:50HZ , ((MOVOL:380V , MOVOL:460V) + CAPPRM:ASME , CAPPRM:MHLW + MOVOL:460V) + FREQ:60HZ , CAPPRM:MHLW + COOL:AIR + MOVOL:200V) + CAPPRE:IEC , ((MOVOL:230V , MOVOL:575V) + COOL:AIR , MOVOL:460V) + CAPPRE:ULCUL + CAPPRM:ASME + FREQ:60HZ)	1X4

Legend:

CAPPRE:IEC - Component approval electrical:IEC
CAPPRE:ULCUL - Component approval electrical:UL/cUL
CAPPRM:AS1210 - Component approval mechanical:AS1210
CAPPRM:ASME - Component approval mechanical:ASME
CAPPRM:CE - Component approval mechanical:CE
CAPPRM:MHLW - Component approval mechanical:MHLW
CAPPRM:MOM - Component approval mechanical:MOM
COOL:AIR - Cooling:Air cooled
FREQ:50HZ - Frequency:50 Hz
FREQ:60HZ - Frequency:60 Hz
IDRY:N - Integrated dryer:No
MODEL:GA110VP_16 - Model:GA 110VSD+
MOVOL:200V - Supply voltage:200 V
MOVOL:230V - Supply voltage:230 V
MOVOL:380V - Supply voltage:380 V
MOVOL:400V - Supply voltage:400 V
MOVOL:460V - Supply voltage:460 V
MOVOL:500V - Supply voltage:500 V
MOVOL:575V - Supply voltage:575 V

21.23 - Cubicle components GA 110 VSD+ - (200V-380V-460V/60Hz - IEC, 230V-460V-575V/60Hz - UL-cUL, 200V-400V-500V/50Hz - IEC) - Pack (20/07/2017 - 11/12/2018)

((((CAPPRM:AS1210 , CAPPRM:CE , CAPPRM:MHLW , CAPPRM:MOM) + MOVOL:400V , CAPPRM:CE + COOL:AIR + MOVOL:500V) + FREQ:50HZ , ((MOVOL:380V , MOVOL:460V) + CAPPRM:ASME , CAPPRM:MHLW + MOVOL:460V) + FREQ:60HZ) + CAPPRE:IEC , (COOL:AIR + MOVOL:575V , MOVOL:460V) + CAPPRE:ULCUL + CAPPRM:ASME + FREQ:60HZ) + IDRY:N + MODEL:GA110VP_16

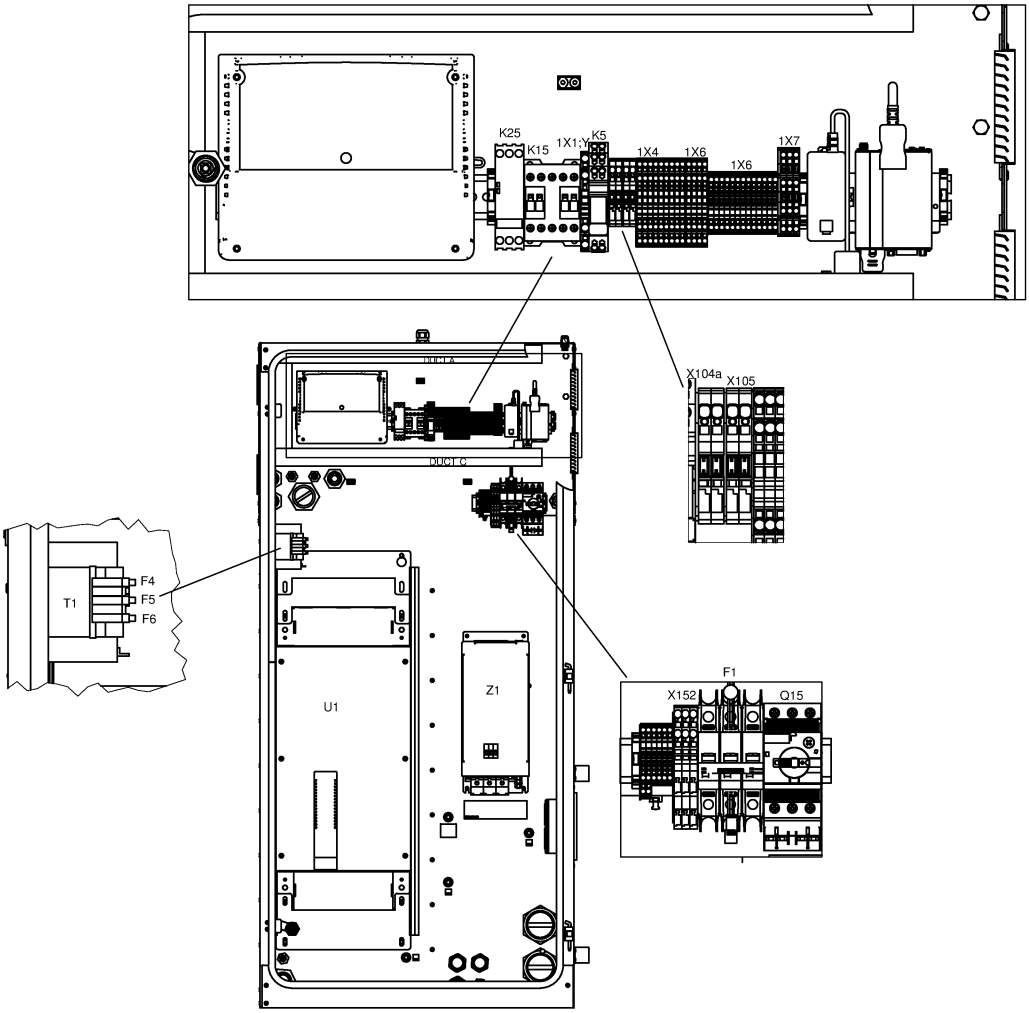

21.23 - Cubicle components GA 110 VSD+ - (200V-380V-460V/60Hz - IEC, 230V-460V-575V/60Hz - UL-cUL, 200V-400V-500V/50Hz - IEC) - Pack (20/07/2017 - 11/12/2018)

((((CAPPRM:AS1210 , CAPPRM:CE , CAPPRM:MHLW , CAPPRM:MOM) + MOVOL:400V , CAPPRM:CE + COOL:AIR + MOVOL:500V) + FREQ:50HZ , ((MOVOL:380V , MOVOL:460V) + CAPPRM:ASME , CAPPRM:MHLW + MOVOL:460V) + FREQ:60HZ) + CAPPRE:IEC , (COOL:AIR + MOVOL:575V , MOVOL:460V) + CAPPRE:ULCUL + CAPPRM:ASME + FREQ:60HZ) + IDRY:N + MODEL:GA110VP_16

Ref	Part Number	Qty	Name	Validity	EL
	1088 0039 37	1	END PLATE	**(20/07/2017 - 20/08/2018)** ((((CAPPRM:AS1210 , CAPPRM:CE , CAPPRM:MHLW , CAPPRM:MOM) + MOVOL:400V , CAPPRM:CE + MOVOL:500V , CAPPRM:MHLW + MOVOL:200V) + FREQ:50HZ , ((MOVOL:200V , MOVOL:460V) + CAPPRM:MHLW , (MOVOL:380V , MOVOL:460V) + CAPPRM:ASME) + FREQ:60HZ) + CAPPRE:IEC , (MOVOL:230V , MOVOL:460V , MOVOL:575V) + CAPPRE:ULCUL + CAPPRM:ASME + FREQ:60HZ) + COOL:AIR **(21/08/2018 - 11/12/2018)** ((((CAPPRM:AS1210 , CAPPRM:CE , CAPPRM:MHLW , CAPPRM:MOM) + MOVOL:400V , CAPPRM:CE + COOL:AIR + MOVOL:500V) + FREQ:50HZ , ((MOVOL:380V , MOVOL:460V) + CAPPRM:ASME , CAPPRM:MHLW + MOVOL:460V) + FREQ:60HZ , CAPPRM:MHLW + COOL:AIR + MOVOL:200V) + CAPPRE:IEC , ((MOVOL:230V , MOVOL:575V) + COOL:AIR , MOVOL:460V) + CAPPRE:ULCUL + CAPPRM:ASME + FREQ:60HZ)	1X6
	1088 0039 37	1	END PLATE	**(20/07/2017 - 20/08/2018)** ((((CAPPRM:AS1210 , CAPPRM:CE , CAPPRM:MHLW , CAPPRM:MOM) + MOVOL:400V , CAPPRM:CE + MOVOL:500V , CAPPRM:MHLW + MOVOL:200V) + FREQ:50HZ , ((MOVOL:200V , MOVOL:460V) + CAPPRM:MHLW , (MOVOL:380V , MOVOL:460V) + CAPPRM:ASME) + FREQ:60HZ) + CAPPRE:IEC , (MOVOL:230V , MOVOL:460V , MOVOL:575V) + CAPPRE:ULCUL + CAPPRM:ASME + FREQ:60HZ) + COOL:AIR **(21/08/2018 - 11/12/2018)** ((((CAPPRM:AS1210 , CAPPRM:CE , CAPPRM:MHLW , CAPPRM:MOM) + MOVOL:400V , CAPPRM:CE + COOL:AIR + MOVOL:500V) + FREQ:50HZ , ((MOVOL:380V , MOVOL:460V) + CAPPRM:ASME , CAPPRM:MHLW + MOVOL:460V) + FREQ:60HZ , CAPPRM:MHLW + COOL:AIR + MOVOL:200V) + CAPPRE:IEC , ((MOVOL:230V , MOVOL:575V) + COOL:AIR , MOVOL:460V) + CAPPRE:ULCUL + CAPPRM:ASME + FREQ:60HZ)	1X1:Y/D
	1088 0037 81	1	CONNECTOR	**(20/07/2017 - 20/08/2018)** ((((CAPPRM:AS1210 , CAPPRM:CE , CAPPRM:MHLW , CAPPRM:MOM) + MOVOL:400V , CAPPRM:CE + MOVOL:500V , CAPPRM:MHLW + MOVOL:200V) + FREQ:50HZ , ((MOVOL:200V , MOVOL:460V) + CAPPRM:MHLW , (MOVOL:380V , MOVOL:460V) + CAPPRM:ASME) + FREQ:60HZ) + CAPPRE:IEC , (MOVOL:230V , MOVOL:460V , MOVOL:575V) + CAPPRE:ULCUL + CAPPRM:ASME + FREQ:60HZ) + COOL:AIR **(21/08/2018 - 11/12/2018)** ((((CAPPRM:AS1210 , CAPPRM:CE , CAPPRM:MHLW , CAPPRM:MOM) + MOVOL:400V , CAPPRM:CE + COOL:AIR + MOVOL:500V) + FREQ:50HZ , ((MOVOL:380V , MOVOL:460V) + CAPPRM:ASME , CAPPRM:MHLW + MOVOL:460V) + FREQ:60HZ , CAPPRM:MHLW + COOL:AIR + MOVOL:200V) + CAPPRE:IEC , ((MOVOL:230V , MOVOL:575V) + COOL:AIR , MOVOL:460V) + CAPPRE:ULCUL + CAPPRM:ASME + FREQ:60HZ)	2X27

Legend:

CAPPRE:IEC - Component approval electrical:IEC
CAPPRE:ULCUL - Component approval electrical:UL/cUL
CAPPRM:AS1210 - Component approval mechanical:AS1210
CAPPRM:ASME - Component approval mechanical:ASME
CAPPRM:CE - Component approval mechanical:CE
CAPPRM:MHLW - Component approval mechanical:MHLW
CAPPRM:MOM - Component approval mechanical:MOM
COOL:AIR - Cooling:Air cooled
FREQ:50HZ - Frequency:50 Hz
FREQ:60HZ - Frequency:60 Hz
IDRY:N - Integrated dryer:No
MODEL:GA110VP_16 - Model:GA 110VSD+
MOVOL:200V - Supply voltage:200 V
MOVOL:230V - Supply voltage:230 V
MOVOL:380V - Supply voltage:380 V
MOVOL:400V - Supply voltage:400 V
MOVOL:460V - Supply voltage:460 V
MOVOL:500V - Supply voltage:500 V
MOVOL:575V - Supply voltage:575 V

21.23 - Cubicle components GA 110 VSD+ - (200V-380V-460V/60Hz - IEC, 230V-460V-575V/60Hz - UL-cUL, 200V-400V-500V/50Hz - IEC) - Pack (20/07/2017 - 11/12/2018)

((((CAPPRM:AS1210 , CAPPRM:CE , CAPPRM:MHLW , CAPPRM:MOM) + MOVOL:400V , CAPPRM:CE + COOL:AIR + MOVOL:500V) + FREQ:50HZ , ((MOVOL:380V , MOVOL:460V) + CAPPRM:ASME , CAPPRM:MHLW + MOVOL:460V) + FREQ:60HZ) + CAPPRE:IEC , (COOL:AIR + MOVOL:575V , MOVOL:460V) + CAPPRE:ULCUL + CAPPRM:ASME + FREQ:60HZ) + IDRY:N + MODEL:GA110VP_16

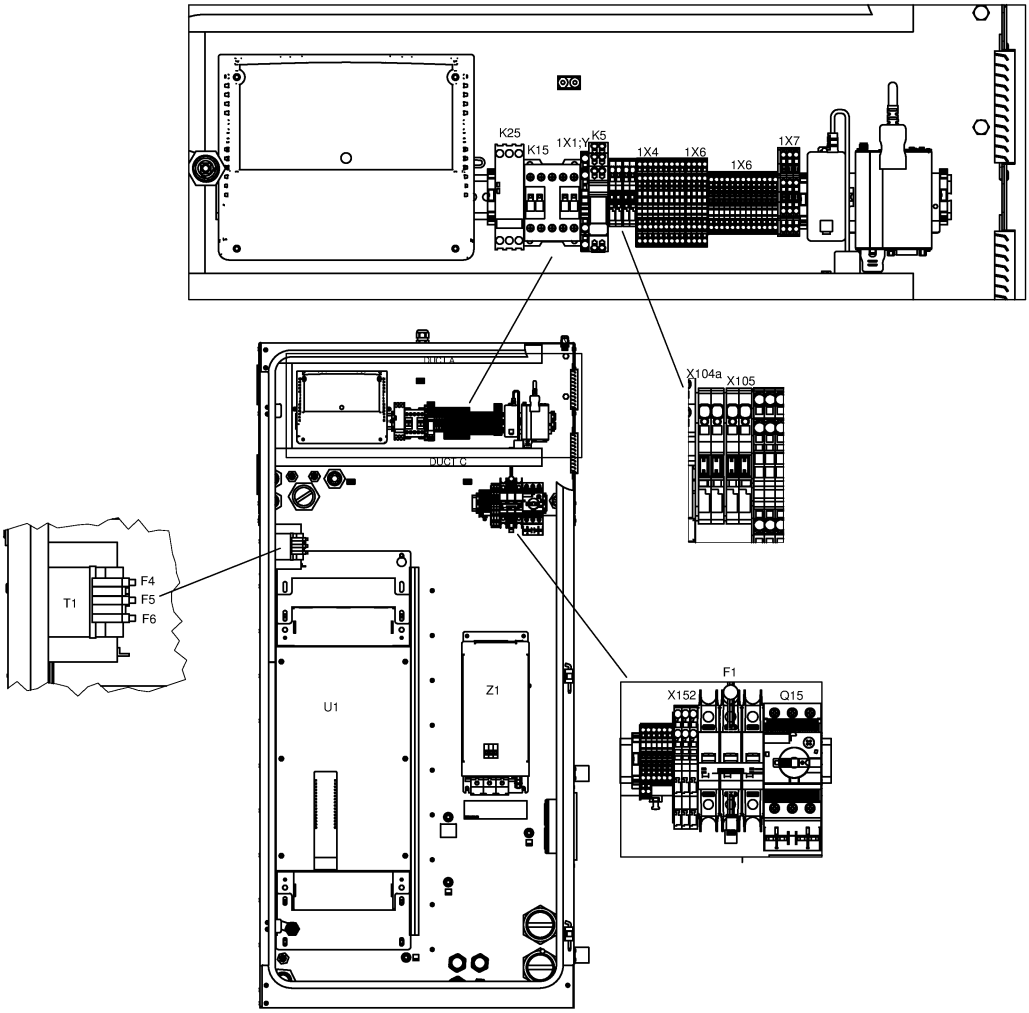

21.23 - Cubicle components GA 110 VSD+ - (200V-380V-460V/60Hz - IEC, 230V-460V-575V/60Hz - UL-cUL, 200V-400V-500V/50Hz - IEC) - Pack (20/07/2017 - 11/12/2018)

((((CAPPRM:AS1210 , CAPPRM:CE , CAPPRM:MHLW , CAPPRM:MOM) + MOVOL:400V , CAPPRM:CE + COOL:AIR + MOVOL:500V) + FREQ:50HZ , ((MOVOL:380V , MOVOL:460V) + CAPPRM:ASME , CAPPRM:MHLW + MOVOL:460V) + FREQ:60HZ) + CAPPRE:IEC , (COOL:AIR + MOVOL:575V , MOVOL:460V) + CAPPRE:ULCUL + CAPPRM:ASME + FREQ:60HZ) + IDRY:N + MODEL:GA110VP_16

Ref	Part Number	Qty	Name	Validity	EL
	1088 0037 80	1	CONNECTOR	**(20/07/2017 - 20/08/2018)** ((((CAPPRM:AS1210 , CAPPRM:CE , CAPPRM:MHLW , CAPPRM:MOM) + MOVOL:400V , CAPPRM:CE + MOVOL:500V , CAPPRM:MHLW + MOVOL:200V) + FREQ:50HZ , ((MOVOL:200V , MOVOL:460V) + CAPPRM:MHLW , (MOVOL:380V , MOVOL:460V) + CAPPRM:ASME) + FREQ:60HZ) + CAPPRE:IEC , (MOVOL:230V , MOVOL:460V , MOVOL:575V) + CAPPRE:ULCUL + CAPPRM:ASME + FREQ:60HZ) + COOL:AIR **(21/08/2018 - 11/12/2018)** ((((CAPPRM:AS1210 , CAPPRM:CE , CAPPRM:MHLW , CAPPRM:MOM) + MOVOL:400V , CAPPRM:CE + COOL:AIR + MOVOL:500V) + FREQ:50HZ , ((MOVOL:380V , MOVOL:460V) + CAPPRM:ASME , CAPPRM:MHLW + MOVOL:460V) + FREQ:60HZ , CAPPRM:MHLW + COOL:AIR + MOVOL:200V) + CAPPRE:IEC , ((MOVOL:230V , MOVOL:575V) + COOL:AIR , MOVOL:460V) + CAPPRE:ULCUL + CAPPRM:ASME + FREQ:60HZ)	2X28
	1088 0031 32	1	CONNECTOR	**(20/07/2017 - 20/08/2018)** ((((CAPPRM:AS1210 , CAPPRM:CE , CAPPRM:MHLW , CAPPRM:MOM) + MOVOL:400V , CAPPRM:CE + MOVOL:500V , CAPPRM:MHLW + MOVOL:200V) + FREQ:50HZ , ((MOVOL:200V , MOVOL:460V) + CAPPRM:MHLW , (MOVOL:380V , MOVOL:460V) + CAPPRM:ASME) + FREQ:60HZ) + CAPPRE:IEC , (MOVOL:230V , MOVOL:460V , MOVOL:575V) + CAPPRE:ULCUL + CAPPRM:ASME + FREQ:60HZ) + COOL:AIR **(21/08/2018 - 11/12/2018)** ((((CAPPRM:AS1210 , CAPPRM:CE , CAPPRM:MHLW , CAPPRM:MOM) + MOVOL:400V , CAPPRM:CE + COOL:AIR + MOVOL:500V) + FREQ:50HZ , ((MOVOL:380V , MOVOL:460V) + CAPPRM:ASME , CAPPRM:MHLW + MOVOL:460V) + FREQ:60HZ , CAPPRM:MHLW + COOL:AIR + MOVOL:200V) + CAPPRE:IEC , ((MOVOL:230V , MOVOL:575V) + COOL:AIR , MOVOL:460V) + CAPPRE:ULCUL + CAPPRM:ASME + FREQ:60HZ)	2X30
	1088 0031 26	1	CONNECTOR 6-POLE	**(20/07/2017 - 20/08/2018)** ((((CAPPRM:AS1210 , CAPPRM:CE , CAPPRM:MHLW , CAPPRM:MOM) + MOVOL:400V , CAPPRM:CE + MOVOL:500V , CAPPRM:MHLW + MOVOL:200V) + FREQ:50HZ , ((MOVOL:200V , MOVOL:460V) + CAPPRM:MHLW , (MOVOL:380V , MOVOL:460V) + CAPPRM:ASME) + FREQ:60HZ) + CAPPRE:IEC , (MOVOL:230V , MOVOL:460V , MOVOL:575V) + CAPPRE:ULCUL + CAPPRM:ASME + FREQ:60HZ) + COOL:AIR **(21/08/2018 - 11/12/2018)** ((((CAPPRM:AS1210 , CAPPRM:CE , CAPPRM:MHLW , CAPPRM:MOM) + MOVOL:400V , CAPPRM:CE + COOL:AIR + MOVOL:500V) + FREQ:50HZ , ((MOVOL:380V , MOVOL:460V) + CAPPRM:ASME , CAPPRM:MHLW + MOVOL:460V) + FREQ:60HZ , CAPPRM:MHLW + COOL:AIR + MOVOL:200V) + CAPPRE:IEC , ((MOVOL:230V , MOVOL:575V) + COOL:AIR , MOVOL:460V) + CAPPRE:ULCUL + CAPPRM:ASME + FREQ:60HZ)	2X31

Legend:

CAPPRE:IEC - Component approval electrical:IEC
CAPPRE:ULCUL - Component approval electrical:UL/cUL
CAPPRM:AS1210 - Component approval mechanical:AS1210
CAPPRM:ASME - Component approval mechanical:ASME
CAPPRM:CE - Component approval mechanical:CE
CAPPRM:MHLW - Component approval mechanical:MHLW
CAPPRM:MOM - Component approval mechanical:MOM
COOL:AIR - Cooling:Air cooled
FREQ:50HZ - Frequency:50 Hz
FREQ:60HZ - Frequency:60 Hz
IDRY:N - Integrated dryer:No
MODEL:GA110VP_16 - Model:GA 110VSD+
MOVOL:200V - Supply voltage:200 V
MOVOL:230V - Supply voltage:230 V
MOVOL:380V - Supply voltage:380 V
MOVOL:400V - Supply voltage:400 V
MOVOL:460V - Supply voltage:460 V
MOVOL:500V - Supply voltage:500 V
MOVOL:575V - Supply voltage:575 V

21.23 - Cubicle components GA 110 VSD+ - (200V-380V-460V/60Hz - IEC, 230V-460V-575V/60Hz - UL-cUL, 200V-400V-500V/50Hz - IEC) - Pack (20/07/2017 - 11/12/2018)

((((CAPPRM:AS1210 , CAPPRM:CE , CAPPRM:MHLW , CAPPRM:MOM) + MOVOL:400V , CAPPRM:CE + COOL:AIR + MOVOL:500V) + FREQ:50HZ , ((MOVOL:380V , MOVOL:460V) + CAPPRM:ASME , CAPPRM:MHLW + MOVOL:460V) + FREQ:60HZ) + CAPPRE:IEC , (COOL:AIR + MOVOL:575V , MOVOL:460V) + CAPPRE:ULCUL + CAPPRM:ASME + FREQ:60HZ) + IDRY:N + MODEL:GA110VP_16

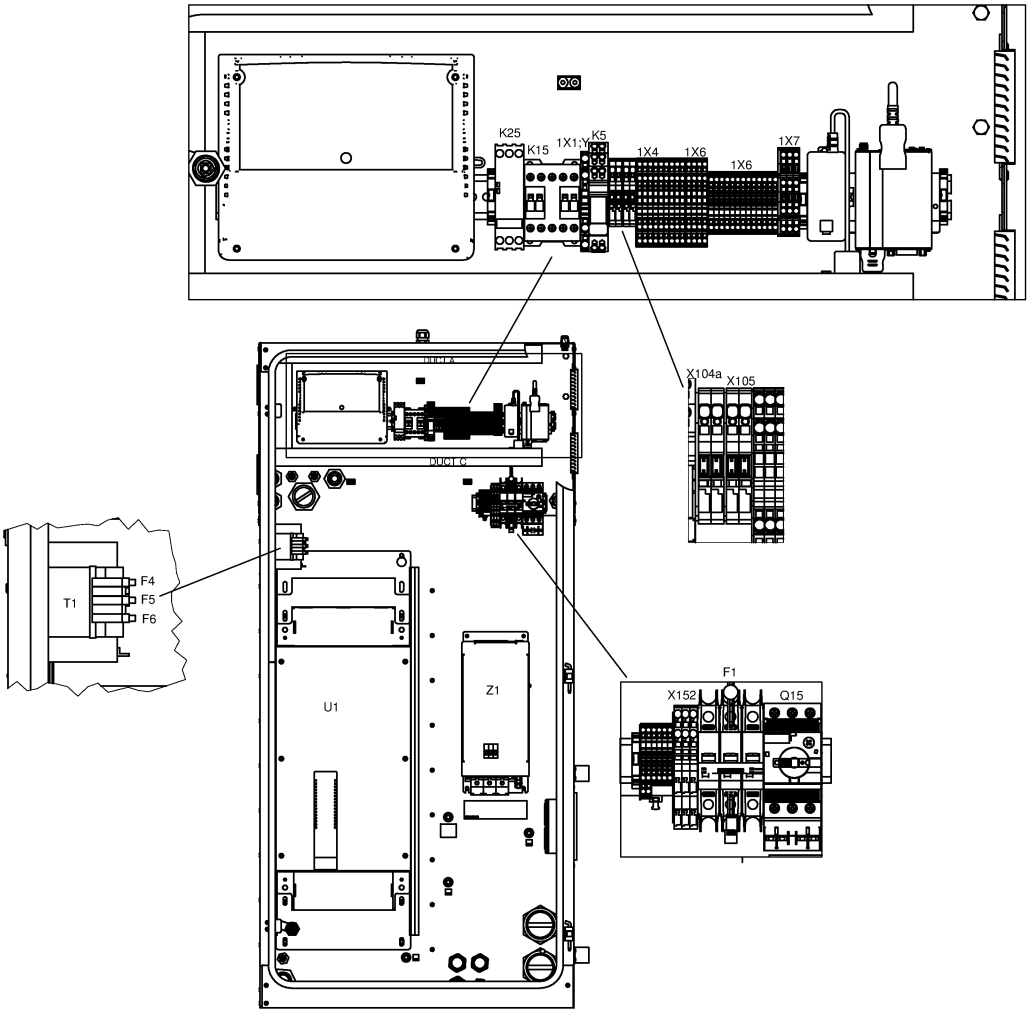

21.23 - Cubicle components GA 110 VSD+ - (200V-380V-460V/60Hz - IEC, 230V-460V-575V/60Hz - UL-cUL, 200V-400V-500V/50Hz - IEC) - Pack (20/07/2017 - 11/12/2018)

((((CAPPRM:AS1210 , CAPPRM:CE , CAPPRM:MHLW , CAPPRM:MOM) + MOVOL:400V , CAPPRM:CE + COOL:AIR + MOVOL:500V) + FREQ:50HZ , ((MOVOL:380V , MOVOL:460V) + CAPPRM:ASME , CAPPRM:MHLW + MOVOL:460V) + FREQ:60HZ) + CAPPRE:IEC , (COOL:AIR + MOVOL:575V , MOVOL:460V) + CAPPRE:ULCUL + CAPPRM:ASME + FREQ:60HZ) + IDRY:N + MODEL:GA110VP_16

Ref	Part Number	Qty	Name	Validity	EL
	~~1089 9664 06~~	1	SWITCH	**(20/07/2017 - 20/08/2018)** ((((CAPPRM:AS1210 , CAPPRM:CE , CAPPRM:MHLW , CAPPRM:MOM) + MOVOL:400V , CAPPRM:CE + MOVOL:500V , CAPPRM:MHLW + MOVOL:200V) + FREQ:50HZ , ((MOVOL:200V , MOVOL:460V) + CAPPRM:MHLW , (MOVOL:380V , MOVOL:460V) + CAPPRM:ASME) + FREQ:60HZ) + CAPPRE:IEC , (MOVOL:230V , MOVOL:460V , MOVOL:575V) + CAPPRE:ULCUL + CAPPRM:ASME + FREQ:60HZ) + COOL:AIR **(21/08/2018 - 11/12/2018)** ((((CAPPRM:AS1210 , CAPPRM:CE , CAPPRM:MHLW , CAPPRM:MOM) + MOVOL:400V , CAPPRM:CE + COOL:AIR + MOVOL:500V) + FREQ:50HZ , ((MOVOL:380V , MOVOL:460V) + CAPPRM:ASME , CAPPRM:MHLW + MOVOL:460V) + FREQ:60HZ , CAPPRM:MHLW + COOL:AIR + MOVOL:200V) + CAPPRE:IEC , ((MOVOL:230V , MOVOL:575V) + COOL:AIR , MOVOL:460V) + CAPPRE:ULCUL + CAPPRM:ASME + FREQ:60HZ)	Q15
	Substituted by:	1089 9551 97 - AUX.CONTACT CIRCUIT BREAKER (quantity: 1)			
	1089 9551 19	1	CIRCUIT BREAKER	**(20/07/2017 - 20/08/2018)** ((((CAPPRM:AS1210 , CAPPRM:CE , CAPPRM:MHLW , CAPPRM:MOM) + MOVOL:400V , CAPPRM:CE + MOVOL:500V , CAPPRM:MHLW + MOVOL:200V) + FREQ:50HZ , ((MOVOL:200V , MOVOL:460V) + CAPPRM:MHLW , (MOVOL:380V , MOVOL:460V) + CAPPRM:ASME) + FREQ:60HZ) + CAPPRE:IEC , (MOVOL:230V , MOVOL:460V , MOVOL:575V) + CAPPRE:ULCUL + CAPPRM:ASME + FREQ:60HZ) + COOL:AIR **(21/08/2018 - 11/12/2018)** ((((CAPPRM:AS1210 , CAPPRM:CE , CAPPRM:MHLW , CAPPRM:MOM) + MOVOL:400V , CAPPRM:CE + COOL:AIR + MOVOL:500V) + FREQ:50HZ , ((MOVOL:380V , MOVOL:460V) + CAPPRM:ASME , CAPPRM:MHLW + MOVOL:460V) + FREQ:60HZ , CAPPRM:MHLW + COOL:AIR + MOVOL:200V) + CAPPRE:IEC , ((MOVOL:230V , MOVOL:575V) + COOL:AIR , MOVOL:460V) + CAPPRE:ULCUL + CAPPRM:ASME + FREQ:60HZ)	Q15
	1088 0038 26	1	TERMINAL	**(20/07/2017 - 20/08/2018)** ((((CAPPRM:AS1210 , CAPPRM:CE , CAPPRM:MHLW , CAPPRM:MOM) + MOVOL:400V , CAPPRM:CE + MOVOL:500V , CAPPRM:MHLW + MOVOL:200V) + FREQ:50HZ , ((MOVOL:200V , MOVOL:460V) + CAPPRM:MHLW , (MOVOL:380V , MOVOL:460V) + CAPPRM:ASME) + FREQ:60HZ) + CAPPRE:IEC , (MOVOL:230V , MOVOL:460V , MOVOL:575V) + CAPPRE:ULCUL + CAPPRM:ASME + FREQ:60HZ) + COOL:AIR **(21/08/2018 - 11/12/2018)** ((((CAPPRM:AS1210 , CAPPRM:CE , CAPPRM:MHLW , CAPPRM:MOM) + MOVOL:400V , CAPPRM:CE + COOL:AIR + MOVOL:500V) + FREQ:50HZ , ((MOVOL:380V , MOVOL:460V) + CAPPRM:ASME , CAPPRM:MHLW + MOVOL:460V) + FREQ:60HZ , CAPPRM:MHLW + COOL:AIR + MOVOL:200V) + CAPPRE:IEC , ((MOVOL:230V , MOVOL:575V) + COOL:AIR , MOVOL:460V) + CAPPRE:ULCUL + CAPPRM:ASME + FREQ:60HZ)	1X1:Y/D

Legend:

CAPPRE:IEC - Component approval electrical:IEC
CAPPRE:ULCUL - Component approval electrical:UL/cUL
CAPPRM:AS1210 - Component approval mechanical:AS1210
CAPPRM:ASME - Component approval mechanical:ASME
CAPPRM:CE - Component approval mechanical:CE
CAPPRM:MHLW - Component approval mechanical:MHLW
CAPPRM:MOM - Component approval mechanical:MOM
COOL:AIR - Cooling:Air cooled
FREQ:50HZ - Frequency:50 Hz
FREQ:60HZ - Frequency:60 Hz
IDRY:N - Integrated dryer:No
MODEL:GA110VP_16 - Model:GA 110VSD+
MOVOL:200V - Supply voltage:200 V
MOVOL:230V - Supply voltage:230 V
MOVOL:380V - Supply voltage:380 V
MOVOL:400V - Supply voltage:400 V
MOVOL:460V - Supply voltage:460 V
MOVOL:500V - Supply voltage:500 V
MOVOL:575V - Supply voltage:575 V

21.23 - Cubicle components GA 110 VSD+ - (200V-380V-460V/60Hz - IEC, 230V-460V-575V/60Hz - UL-cUL, 200V-400V-500V/50Hz - IEC) - Pack (20/07/2017 - 11/12/2018)

((((CAPPRM:AS1210 , CAPPRM:CE , CAPPRM:MHLW , CAPPRM:MOM) + MOVOL:400V , CAPPRM:CE + COOL:AIR + MOVOL:500V) + FREQ:50HZ , ((MOVOL:380V , MOVOL:460V) + CAPPRM:ASME , CAPPRM:MHLW + MOVOL:460V) + FREQ:60HZ) + CAPPRE:IEC , (COOL:AIR + MOVOL:575V , MOVOL:460V) + CAPPRE:ULCUL + CAPPRM:ASME + FREQ:60HZ) + IDRY:N + MODEL:GA110VP_16

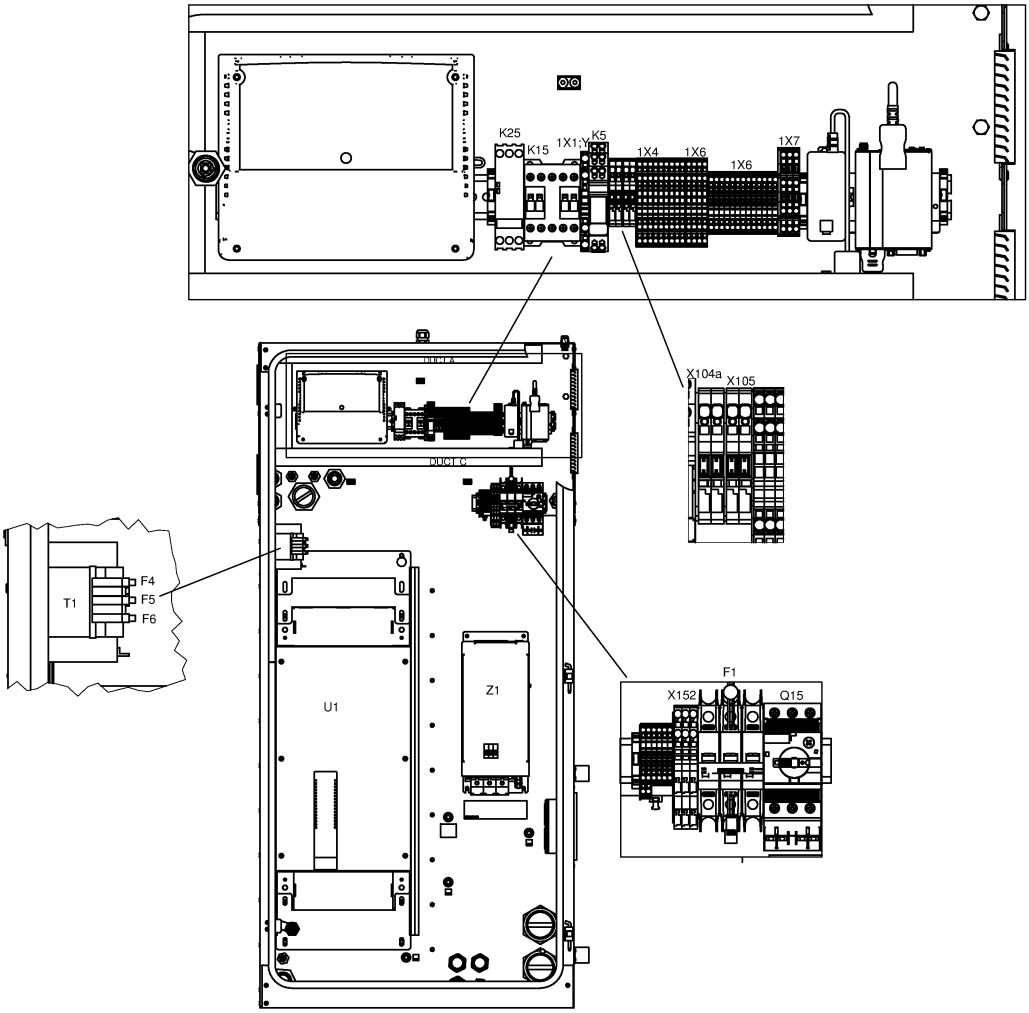

21.23 - Cubicle components GA 110 VSD+ - (200V-380V-460V/60Hz - IEC, 230V-460V-575V/60Hz - UL-cUL, 200V-400V-500V/50Hz - IEC) - Pack (20/07/2017 - 11/12/2018)

((((CAPPRM:AS1210 , CAPPRM:CE , CAPPRM:MHLW , CAPPRM:MOM) + MOVOL:400V , CAPPRM:CE + COOL:AIR + MOVOL:500V) + FREQ:50HZ , ((MOVOL:380V , MOVOL:460V) + CAPPRM:ASME , CAPPRM:MHLW + MOVOL:460V) + FREQ:60HZ) + CAPPRE:IEC , (COOL:AIR + MOVOL:575V , MOVOL:460V) + CAPPRE:ULCUL + CAPPRM:ASME + FREQ:60HZ) + IDRY:N + MODEL:GA110VP_16

Ref	Part Number	Qty	Name	Validity	EL
	1089 9602 79	1	CONTACTOR 110 V	**(20/07/2017 - 20/08/2018)** ((((CAPPRM:AS1210 , CAPPRM:CE , CAPPRM:MHLW , CAPPRM:MOM) + MOVOL:400V , CAPPRM:CE + MOVOL:500V , CAPPRM:MHLW + MOVOL:200V) + FREQ:50HZ , ((MOVOL:200V , MOVOL:460V) + CAPPRM:MHLW , (MOVOL:380V , MOVOL:460V) + CAPPRM:ASME) + FREQ:60HZ) + CAPPRE:IEC , (MOVOL:230V , MOVOL:460V , MOVOL:575V) + CAPPRE:ULCUL + CAPPRM:ASME + FREQ:60HZ) + COOL:AIR **(21/08/2018 - 11/12/2018)** ((((CAPPRM:AS1210 , CAPPRM:CE , CAPPRM:MHLW , CAPPRM:MOM) + MOVOL:400V , CAPPRM:CE + COOL:AIR + MOVOL:500V) + FREQ:50HZ , ((MOVOL:380V , MOVOL:460V) + CAPPRM:ASME , CAPPRM:MHLW + MOVOL:460V) + FREQ:60HZ , CAPPRM:MHLW + COOL:AIR + MOVOL:200V) + CAPPRE:IEC , ((MOVOL:230V , MOVOL:575V) + COOL:AIR , MOVOL:460V) + CAPPRE:ULCUL + CAPPRM:ASME + FREQ:60HZ)	K15
	1089 9461 26	1	PHASE SEQUENCE RELAY	**(20/07/2017 - 20/08/2018)** ((((CAPPRM:AS1210 , CAPPRM:CE , CAPPRM:MHLW , CAPPRM:MOM) + MOVOL:400V , CAPPRM:CE + MOVOL:500V , CAPPRM:MHLW + MOVOL:200V) + FREQ:50HZ , ((MOVOL:200V , MOVOL:460V) + CAPPRM:MHLW , (MOVOL:380V , MOVOL:460V) + CAPPRM:ASME) + FREQ:60HZ) + CAPPRE:IEC , (MOVOL:230V , MOVOL:460V , MOVOL:575V) + CAPPRE:ULCUL + CAPPRM:ASME + FREQ:60HZ) + COOL:AIR **(21/08/2018 - 11/12/2018)** ((((CAPPRM:AS1210 , CAPPRM:CE , CAPPRM:MHLW , CAPPRM:MOM) + MOVOL:400V , CAPPRM:CE + COOL:AIR + MOVOL:500V) + FREQ:50HZ , ((MOVOL:380V , MOVOL:460V) + CAPPRM:ASME , CAPPRM:MHLW + MOVOL:460V) + FREQ:60HZ , CAPPRM:MHLW + COOL:AIR + MOVOL:200V) + CAPPRE:IEC , ((MOVOL:230V , MOVOL:575V) + COOL:AIR , MOVOL:460V) + CAPPRE:ULCUL + CAPPRM:ASME + FREQ:60HZ)	K25
	1088 0032 17	1	RELAY 115 VAC	**(20/07/2017 - 20/08/2018)** ((((CAPPRM:AS1210 , CAPPRM:CE , CAPPRM:MHLW , CAPPRM:MOM) + MOVOL:400V , CAPPRM:CE + MOVOL:500V , CAPPRM:MHLW + MOVOL:200V) + FREQ:50HZ , ((MOVOL:200V , MOVOL:460V) + CAPPRM:MHLW , (MOVOL:380V , MOVOL:460V) + CAPPRM:ASME) + FREQ:60HZ) + CAPPRE:IEC , (MOVOL:230V , MOVOL:460V , MOVOL:575V) + CAPPRE:ULCUL + CAPPRM:ASME + FREQ:60HZ) + COOL:AIR **(21/08/2018 - 11/12/2018)** ((((CAPPRM:AS1210 , CAPPRM:CE , CAPPRM:MHLW , CAPPRM:MOM) + MOVOL:400V , CAPPRM:CE + COOL:AIR + MOVOL:500V) + FREQ:50HZ , ((MOVOL:380V , MOVOL:460V) + CAPPRM:ASME , CAPPRM:MHLW + MOVOL:460V) + FREQ:60HZ , CAPPRM:MHLW + COOL:AIR + MOVOL:200V) + CAPPRE:IEC , ((MOVOL:230V , MOVOL:575V) + COOL:AIR , MOVOL:460V) + CAPPRE:ULCUL + CAPPRM:ASME + FREQ:60HZ)	K5

Legend:

CAPPRE:IEC - Component approval electrical:IEC
CAPPRM:ASME - Component approval mechanical:ASME
CAPPRM:MOM - Component approval mechanical:MOM
FREQ:60HZ - Frequency:60 Hz
MOVOL:200V - Supply voltage:200 V
MOVOL:400V - Supply voltage:400 V
MOVOL:575V - Supply voltage:575 V
CAPPRE:ULCUL - Component approval electrical:UL/cUL
CAPPRM:CE - Component approval mechanical:CE
COOL:AIR - Cooling:Air cooled
IDRY:N - Integrated dryer:No
MOVOL:230V - Supply voltage:230 V
MOVOL:460V - Supply voltage:460 V
CAPPRM:AS1210 - Component approval mechanical:AS1210
CAPPRM:MHLW - Component approval mechanical:MHLW
FREQ:50HZ - Frequency:50 Hz
MODEL:GA110VP_16 - Model:GA 110VSD+
MOVOL:380V - Supply voltage:380 V
MOVOL:500V - Supply voltage:500 V

21.23 - Cubicle components GA 110 VSD+ - (200V-380V-460V/60Hz - IEC, 230V-460V-575V/60Hz - UL-cUL, 200V-400V-500V/50Hz - IEC) - Pack (20/07/2017 - 11/12/2018)

((((CAPPRM:AS1210 , CAPPRM:CE , CAPPRM:MHLW , CAPPRM:MOM) + MOVOL:400V , CAPPRM:CE + COOL:AIR + MOVOL:500V) + FREQ:50HZ , ((MOVOL:380V , MOVOL:460V) + CAPPRM:ASME , CAPPRM:MHLW + MOVOL:460V) + FREQ:60HZ) + CAPPRE:IEC , (COOL:AIR + MOVOL:575V , MOVOL:460V) + CAPPRE:ULCUL + CAPPRM:ASME + FREQ:60HZ) + IDRY:N + MODEL:GA110VP_16

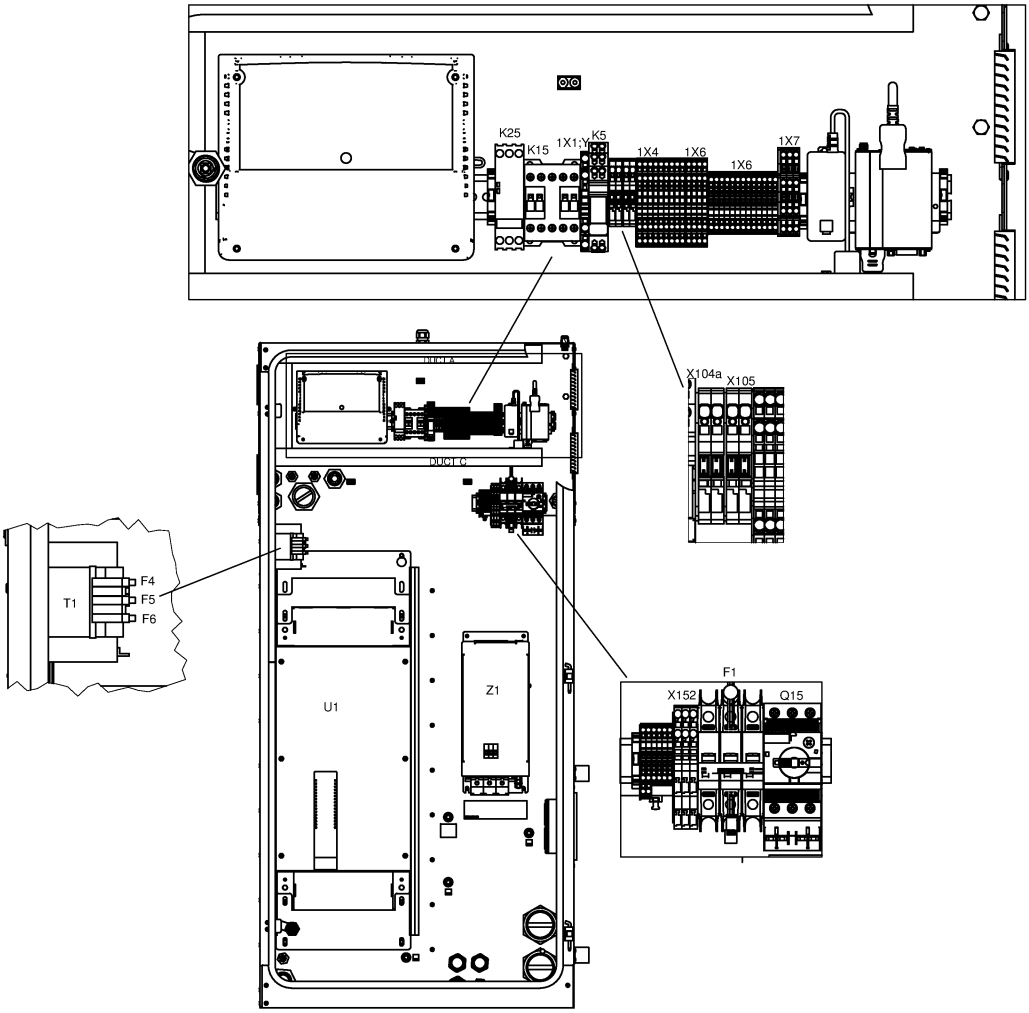

21.23 - Cubicle components GA 110 VSD+ - (200V-380V-460V/60Hz - IEC, 230V-460V-575V/60Hz - UL-cUL, 200V-400V-500V/50Hz - IEC) - Pack (20/07/2017 - 11/12/2018)

((((CAPPRM:AS1210 , CAPPRM:CE , CAPPRM:MHLW , CAPPRM:MOM) + MOVOL:400V , CAPPRM:CE + COOL:AIR + MOVOL:500V) + FREQ:50HZ , ((MOVOL:380V , MOVOL:460V) + CAPPRM:ASME , CAPPRM:MHLW + MOVOL:460V) + FREQ:60HZ) + CAPPRE:IEC , (COOL:AIR + MOVOL:575V , MOVOL:460V) + CAPPRE:ULCUL + CAPPRM:ASME + FREQ:60HZ) + IDRY:N + MODEL:GA110VP_16

Ref	Part Number	Qty	Name	Validity	EL
	0991 8011 21	AR	CABLE TRAY	**(20/07/2017 - 20/08/2018)** ((((CAPPRM:AS1210 , CAPPRM:CE , CAPPRM:MHLW , CAPPRM:MOM) + MOVOL:400V , CAPPRM:CE + MOVOL:500V , CAPPRM:MHLW + MOVOL:200V) + FREQ:50HZ , ((MOVOL:200V , MOVOL:460V) + CAPPRM:MHLW , (MOVOL:380V , MOVOL:460V) + CAPPRM:ASME) + FREQ:60HZ) + CAPPRE:IEC , (MOVOL:230V , MOVOL:460V , MOVOL:575V) + CAPPRE:ULCUL + CAPPRM:ASME + FREQ:60HZ) + COOL:AIR **(21/08/2018 - 11/12/2018)** ((((CAPPRM:AS1210 , CAPPRM:CE , CAPPRM:MHLW , CAPPRM:MOM) + MOVOL:400V , CAPPRM:CE + COOL:AIR + MOVOL:500V) + FREQ:50HZ , ((MOVOL:380V , MOVOL:460V) + CAPPRM:ASME , CAPPRM:MHLW + MOVOL:460V) + FREQ:60HZ , CAPPRM:MHLW + COOL:AIR + MOVOL:200V) + CAPPRE:IEC , ((MOVOL:230V , MOVOL:575V) + COOL:AIR , MOVOL:460V) + CAPPRE:ULCUL + CAPPRM:ASME + FREQ:60HZ)	L=1384mm
	0697 9811 16	1	PLUG M50	**(20/07/2017 - 20/08/2018)** ((((CAPPRM:AS1210 , CAPPRM:CE , CAPPRM:MHLW , CAPPRM:MOM) + MOVOL:400V , CAPPRM:CE + MOVOL:500V , CAPPRM:MHLW + MOVOL:200V) + FREQ:50HZ , ((MOVOL:200V , MOVOL:460V) + CAPPRM:MHLW , (MOVOL:380V , MOVOL:460V) + CAPPRM:ASME) + FREQ:60HZ) + CAPPRE:IEC , (MOVOL:230V , MOVOL:460V , MOVOL:575V) + CAPPRE:ULCUL + CAPPRM:ASME + FREQ:60HZ) + COOL:AIR **(21/08/2018 - 11/12/2018)** ((((CAPPRM:AS1210 , CAPPRM:CE , CAPPRM:MHLW , CAPPRM:MOM) + MOVOL:400V , CAPPRM:CE + COOL:AIR + MOVOL:500V) + FREQ:50HZ , ((MOVOL:380V , MOVOL:460V) + CAPPRM:ASME , CAPPRM:MHLW + MOVOL:460V) + FREQ:60HZ , CAPPRM:MHLW + COOL:AIR + MOVOL:200V) + CAPPRE:IEC , ((MOVOL:230V , MOVOL:575V) + COOL:AIR , MOVOL:460V) + CAPPRE:ULCUL + CAPPRM:ASME + FREQ:60HZ)	
	Electrical legend:	Plug for Dryer			
	0989 3700 47	1	LOCKNUT	**(20/07/2017 - 20/08/2018)** ((((CAPPRM:AS1210 , CAPPRM:CE , CAPPRM:MHLW , CAPPRM:MOM) + MOVOL:400V , CAPPRM:CE + MOVOL:500V , CAPPRM:MHLW + MOVOL:200V) + FREQ:50HZ , ((MOVOL:200V , MOVOL:460V) + CAPPRM:MHLW , (MOVOL:380V , MOVOL:460V) + CAPPRM:ASME) + FREQ:60HZ) + CAPPRE:IEC , (MOVOL:230V , MOVOL:460V , MOVOL:575V) + CAPPRE:ULCUL + CAPPRM:ASME + FREQ:60HZ) + COOL:AIR **(21/08/2018 - 11/12/2018)** ((((CAPPRM:AS1210 , CAPPRM:CE , CAPPRM:MHLW , CAPPRM:MOM) + MOVOL:400V , CAPPRM:CE + COOL:AIR + MOVOL:500V) + FREQ:50HZ , ((MOVOL:380V , MOVOL:460V) + CAPPRM:ASME , CAPPRM:MHLW + MOVOL:460V) + FREQ:60HZ , CAPPRM:MHLW + COOL:AIR + MOVOL:200V) + CAPPRE:IEC , ((MOVOL:230V , MOVOL:575V) + COOL:AIR , MOVOL:460V) + CAPPRE:ULCUL + CAPPRM:ASME + FREQ:60HZ)	
	Electrical legend:	Locknut for dryer			

Legend:

CAPPRE:IEC - Component approval electrical:IEC
CAPPRM:ASME - Component approval mechanical:ASME
CAPPRM:MOM - Component approval mechanical:MOM
FREQ:60HZ - Frequency:60 Hz
MOVOL:200V - Supply voltage:200 V
MOVOL:400V - Supply voltage:400 V
MOVOL:575V - Supply voltage:575 V
CAPPRE:ULCUL - Component approval electrical:UL/cUL
CAPPRM:CE - Component approval mechanical:CE
COOL:AIR - Cooling:Air cooled
IDRY:N - Integrated dryer:No
MOVOL:230V - Supply voltage:230 V
MOVOL:460V - Supply voltage:460 V
CAPPRM:AS1210 - Component approval mechanical:AS1210
CAPPRM:MHLW - Component approval mechanical:MHLW
FREQ:50HZ - Frequency:50 Hz
MODEL:GA110VP_16 - Model:GA 110VSD+
MOVOL:380V - Supply voltage:380 V
MOVOL:500V - Supply voltage:500 V

21.23 - Cubicle components GA 110 VSD+ - (200V-380V-460V/60Hz - IEC, 230V-460V-575V/60Hz - UL-cUL, 200V-400V-500V/50Hz - IEC) - Pack (20/07/2017 - 11/12/2018)

((((CAPPRM:AS1210 , CAPPRM:CE , CAPPRM:MHLW , CAPPRM:MOM) + MOVOL:400V , CAPPRM:CE + COOL:AIR + MOVOL:500V) + FREQ:50HZ , ((MOVOL:380V , MOVOL:460V) + CAPPRM:ASME , CAPPRM:MHLW + MOVOL:460V) + FREQ:60HZ) + CAPPRE:IEC , (COOL:AIR + MOVOL:575V , MOVOL:460V) + CAPPRE:ULCUL + CAPPRM:ASME + FREQ:60HZ) + IDRY:N + MODEL:GA110VP_16

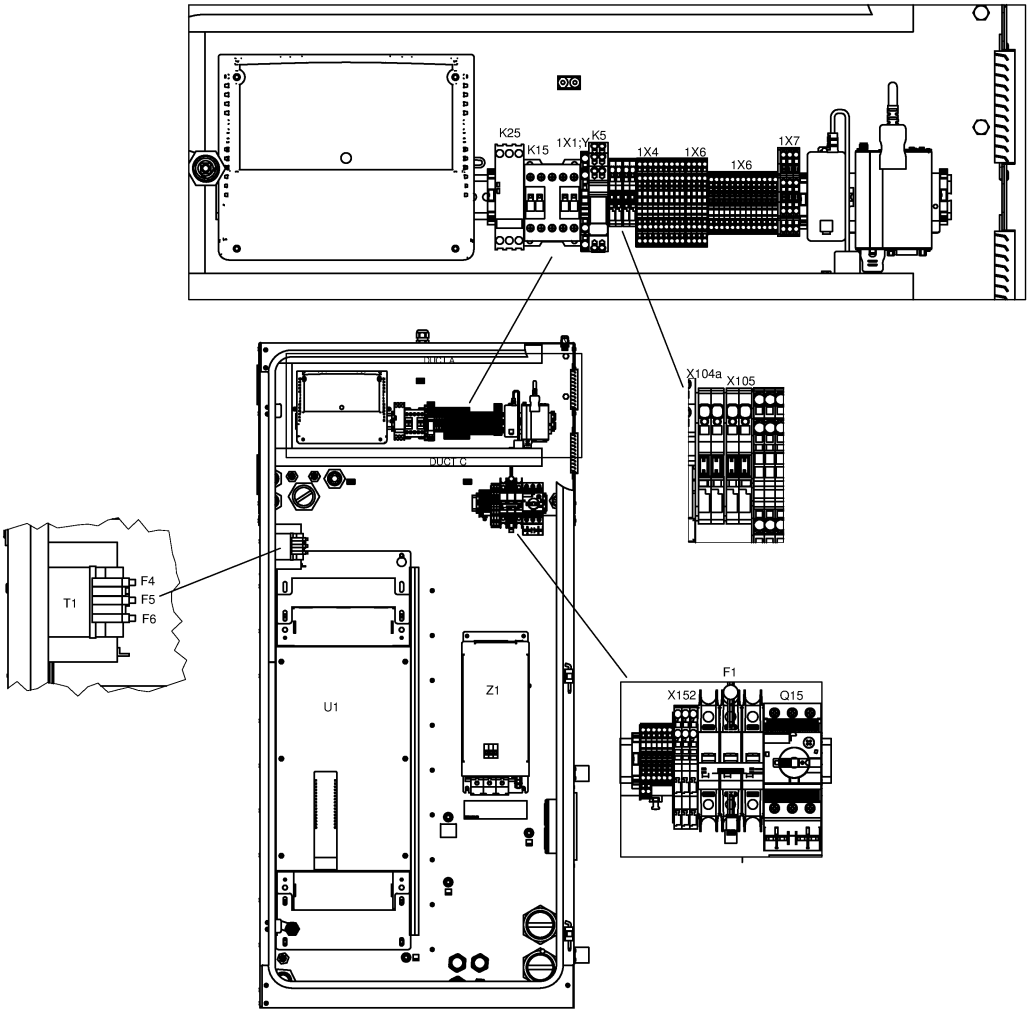

Ref	Part Number	Qty	Name	Validity	EL
	0697 9811 11	2	PLUG	**(20/07/2017 - 20/08/2018)** ((((CAPPRM:AS1210 , CAPPRM:CE , CAPPRM:MHLW , CAPPRM:MOM) + MOVOL:400V , CAPPRM:CE + MOVOL:500V , CAPPRM:MHLW + MOVOL:200V) + FREQ:50HZ , ((MOVOL:200V , MOVOL:460V) + CAPPRM:MHLW , (MOVOL:380V , MOVOL:460V) + CAPPRM:ASME) + FREQ:60HZ) + CAPPRE:IEC , (MOVOL:230V , MOVOL:460V , MOVOL:575V) + CAPPRE:ULCUL + CAPPRM:ASME + FREQ:60HZ) + COOL:AIR **(21/08/2018 - 11/12/2018)** ((((CAPPRM:AS1210 , CAPPRM:CE , CAPPRM:MHLW , CAPPRM:MOM) + MOVOL:400V , CAPPRM:CE + COOL:AIR + MOVOL:500V) + FREQ:50HZ , ((MOVOL:380V , MOVOL:460V) + CAPPRM:ASME , CAPPRM:MHLW + MOVOL:460V) + FREQ:60HZ , CAPPRM:MHLW + COOL:AIR + MOVOL:200V) + CAPPRE:IEC , ((MOVOL:230V , MOVOL:575V) + COOL:AIR , MOVOL:460V) + CAPPRE:ULCUL + CAPPRM:ASME + FREQ:60HZ)	
	Electrical legend:	Plug for FF Drain/LAT			
	0989 3700 42	2	NUT	**(20/07/2017 - 20/08/2018)** ((((CAPPRM:AS1210 , CAPPRM:CE , CAPPRM:MHLW , CAPPRM:MOM) + MOVOL:400V , CAPPRM:CE + MOVOL:500V , CAPPRM:MHLW + MOVOL:200V) + FREQ:50HZ , ((MOVOL:200V , MOVOL:460V) + CAPPRM:MHLW , (MOVOL:380V , MOVOL:460V) + CAPPRM:ASME) + FREQ:60HZ) + CAPPRE:IEC , (MOVOL:230V , MOVOL:460V , MOVOL:575V) + CAPPRE:ULCUL + CAPPRM:ASME + FREQ:60HZ) + COOL:AIR **(21/08/2018 - 11/12/2018)** ((((CAPPRM:AS1210 , CAPPRM:CE , CAPPRM:MHLW , CAPPRM:MOM) + MOVOL:400V , CAPPRM:CE + COOL:AIR + MOVOL:500V) + FREQ:50HZ , ((MOVOL:380V , MOVOL:460V) + CAPPRM:ASME , CAPPRM:MHLW + MOVOL:460V) + FREQ:60HZ , CAPPRM:MHLW + COOL:AIR + MOVOL:200V) + CAPPRE:IEC , ((MOVOL:230V , MOVOL:575V) + COOL:AIR , MOVOL:460V) + CAPPRE:ULCUL + CAPPRM:ASME + FREQ:60HZ)	
	Electrical legend:	Locknut for FF Drain/LAT			
	1088 0031 13	1	CONNECTOR 13-POLE	**(20/07/2017 - 20/08/2018)** ((((CAPPRM:AS1210 , CAPPRM:CE , CAPPRM:MHLW , CAPPRM:MOM) + MOVOL:400V , CAPPRM:CE + MOVOL:500V , CAPPRM:MHLW + MOVOL:200V) + FREQ:50HZ , ((MOVOL:200V , MOVOL:460V) + CAPPRM:MHLW , (MOVOL:380V , MOVOL:460V) + CAPPRM:ASME) + FREQ:60HZ) + CAPPRE:IEC , (MOVOL:230V , MOVOL:460V , MOVOL:575V) + CAPPRE:ULCUL + CAPPRM:ASME + FREQ:60HZ) + COOL:AIR **(21/08/2018 - 11/12/2018)** ((((CAPPRM:AS1210 , CAPPRM:CE , CAPPRM:MHLW , CAPPRM:MOM) + MOVOL:400V , CAPPRM:CE + COOL:AIR + MOVOL:500V) + FREQ:50HZ , ((MOVOL:380V , MOVOL:460V) + CAPPRM:ASME , CAPPRM:MHLW + MOVOL:460V) + FREQ:60HZ , CAPPRM:MHLW + COOL:AIR + MOVOL:200V) + CAPPRE:IEC , ((MOVOL:230V , MOVOL:575V) + COOL:AIR , MOVOL:460V) + CAPPRE:ULCUL + CAPPRM:ASME + FREQ:60HZ)	1X30

Legend:

CAPPRE:IEC - Component approval electrical:IEC
CAPPRM:ASME - Component approval mechanical:ASME
CAPPRM:MOM - Component approval mechanical:MOM
FREQ:60HZ - Frequency:60 Hz
MOVOL:200V - Supply voltage:200 V
MOVOL:400V - Supply voltage:400 V
MOVOL:575V - Supply voltage:575 V
CAPPRE:ULCUL - Component approval electrical:UL/cUL
CAPPRM:CE - Component approval mechanical:CE
COOL:AIR - Cooling:Air cooled
IDRY:N - Integrated dryer:No
MOVOL:230V - Supply voltage:230 V
MOVOL:460V - Supply voltage:460 V
CAPPRM:AS1210 - Component approval mechanical:AS1210
CAPPRM:MHLW - Component approval mechanical:MHLW
FREQ:50HZ - Frequency:50 Hz
MODEL:GA110VP_16 - Model:GA 110VSD+
MOVOL:380V - Supply voltage:380 V
MOVOL:500V - Supply voltage:500 V

21.23 - Cubicle components GA 110 VSD+ - (200V-380V-460V/60Hz - IEC, 230V-460V-575V/60Hz - UL-cUL, 200V-400V-500V/50Hz - IEC) - Pack (20/07/2017 - 11/12/2018)

((((CAPPRM:AS1210 , CAPPRM:CE , CAPPRM:MHLW , CAPPRM:MOM) + MOVOL:400V , CAPPRM:CE + COOL:AIR + MOVOL:500V) + FREQ:50HZ , ((MOVOL:380V , MOVOL:460V) + CAPPRM:ASME , CAPPRM:MHLW + MOVOL:460V) + FREQ:60HZ) + CAPPRE:IEC , (COOL:AIR + MOVOL:575V , MOVOL:460V) + CAPPRE:ULCUL + CAPPRM:ASME + FREQ:60HZ) + IDRY:N + MODEL:GA110VP_16

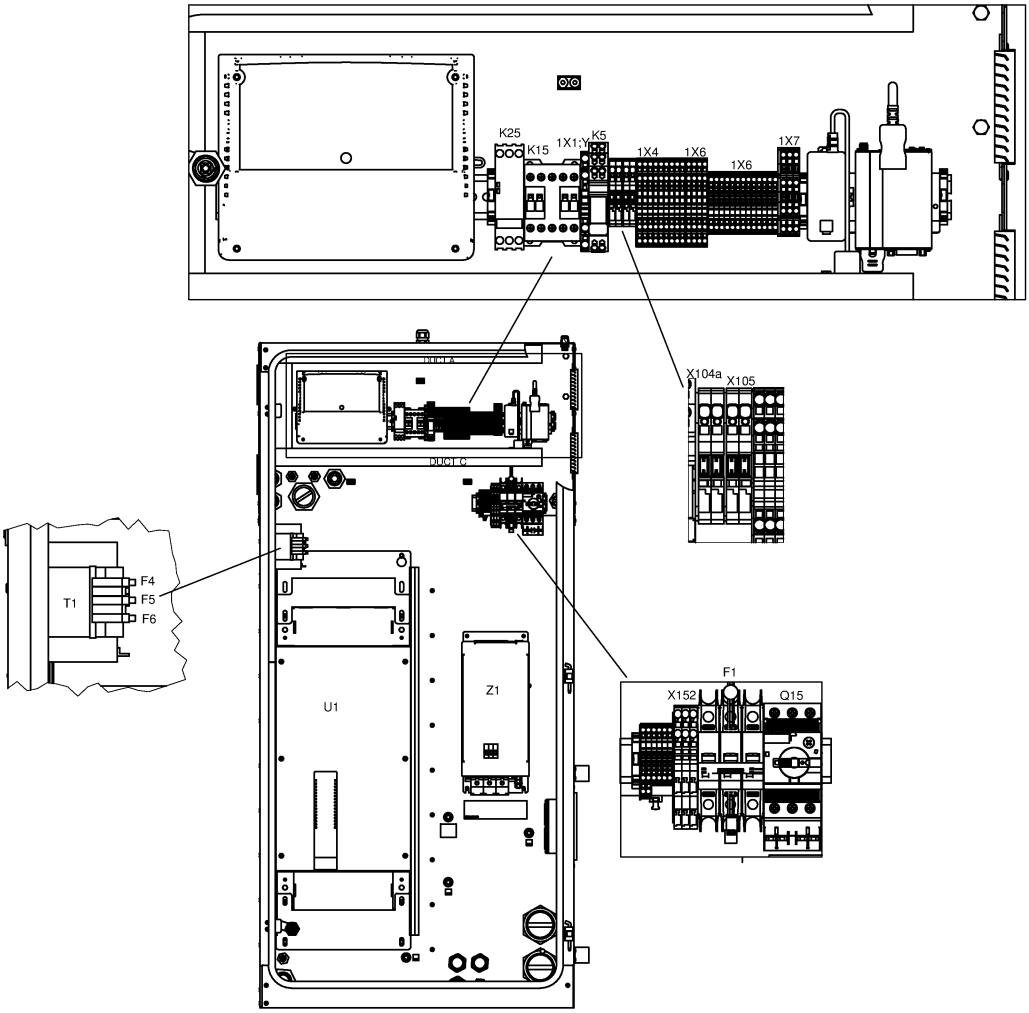

21.23 - Cubicle components GA 110 VSD+ - (200V-380V-460V/60Hz - IEC, 230V-460V-575V/60Hz - UL-cUL, 200V-400V-500V/50Hz - IEC) - Pack (20/07/2017 - 11/12/2018)

((((CAPPRM:AS1210 , CAPPRM:CE , CAPPRM:MHLW , CAPPRM:MOM) + MOVOL:400V , CAPPRM:CE + COOL:AIR + MOVOL:500V) + FREQ:50HZ , ((MOVOL:380V , MOVOL:460V) + CAPPRM:ASME , CAPPRM:MHLW + MOVOL:460V) + FREQ:60HZ) + CAPPRE:IEC , (COOL:AIR + MOVOL:575V , MOVOL:460V) + CAPPRE:ULCUL + CAPPRM:ASME + FREQ:60HZ) + IDRY:N + MODEL:GA110VP_16

Ref	Part Number	Qty	Name	Validity	EL
	1088 0037 82	1	CONNECTOR	**(20/07/2017 - 20/08/2018)** ((((CAPPRM:AS1210 , CAPPRM:CE , CAPPRM:MHLW , CAPPRM:MOM) + MOVOL:400V , CAPPRM:CE + MOVOL:500V , CAPPRM:MHLW + MOVOL:200V) + FREQ:50HZ , ((MOVOL:200V , MOVOL:460V) + CAPPRM:MHLW , (MOVOL:380V , MOVOL:460V) + CAPPRM:ASME) + FREQ:60HZ) + CAPPRE:IEC , (MOVOL:230V , MOVOL:460V , MOVOL:575V) + CAPPRE:ULCUL + CAPPRM:ASME + FREQ:60HZ) + COOL:AIR **(21/08/2018 - 11/12/2018)** ((((CAPPRM:AS1210 , CAPPRM:CE , CAPPRM:MHLW , CAPPRM:MOM) + MOVOL:400V , CAPPRM:CE + COOL:AIR + MOVOL:500V) + FREQ:50HZ , ((MOVOL:380V , MOVOL:460V) + CAPPRM:ASME , CAPPRM:MHLW + MOVOL:460V) + FREQ:60HZ , CAPPRM:MHLW + COOL:AIR + MOVOL:200V) + CAPPRE:IEC , ((MOVOL:230V , MOVOL:575V) + COOL:AIR , MOVOL:460V) + CAPPRE:ULCUL + CAPPRM:ASME + FREQ:60HZ)	3X34
	0697 9811 13	1	PLUG M25	**(20/07/2017 - 20/08/2018)** ((((CAPPRM:AS1210 , CAPPRM:CE , CAPPRM:MHLW , CAPPRM:MOM) + MOVOL:400V , CAPPRM:CE + MOVOL:500V , CAPPRM:MHLW + MOVOL:200V) + FREQ:50HZ , ((MOVOL:200V , MOVOL:460V) + CAPPRM:MHLW , (MOVOL:380V , MOVOL:460V) + CAPPRM:ASME) + FREQ:60HZ) + CAPPRE:IEC , (MOVOL:230V , MOVOL:460V , MOVOL:575V) + CAPPRE:ULCUL + CAPPRM:ASME + FREQ:60HZ) + COOL:AIR **(21/08/2018 - 11/12/2018)** ((((CAPPRM:AS1210 , CAPPRM:CE , CAPPRM:MHLW , CAPPRM:MOM) + MOVOL:400V , CAPPRM:CE + COOL:AIR + MOVOL:500V) + FREQ:50HZ , ((MOVOL:380V , MOVOL:460V) + CAPPRM:ASME , CAPPRM:MHLW + MOVOL:460V) + FREQ:60HZ , CAPPRM:MHLW + COOL:AIR + MOVOL:200V) + CAPPRE:IEC , ((MOVOL:230V , MOVOL:575V) + COOL:AIR , MOVOL:460V) + CAPPRE:ULCUL + CAPPRM:ASME + FREQ:60HZ)	
	Electrical legend:	Energy recovery			
	0989 3700 44	1	LOCKNUT	**(20/07/2017 - 20/08/2018)** ((((CAPPRM:AS1210 , CAPPRM:CE , CAPPRM:MHLW , CAPPRM:MOM) + MOVOL:400V , CAPPRM:CE + MOVOL:500V , CAPPRM:MHLW + MOVOL:200V) + FREQ:50HZ , ((MOVOL:200V , MOVOL:460V) + CAPPRM:MHLW , (MOVOL:380V , MOVOL:460V) + CAPPRM:ASME) + FREQ:60HZ) + CAPPRE:IEC , (MOVOL:230V , MOVOL:460V , MOVOL:575V) + CAPPRE:ULCUL + CAPPRM:ASME + FREQ:60HZ) + COOL:AIR **(21/08/2018 - 11/12/2018)** ((((CAPPRM:AS1210 , CAPPRM:CE , CAPPRM:MHLW , CAPPRM:MOM) + MOVOL:400V , CAPPRM:CE + COOL:AIR + MOVOL:500V) + FREQ:50HZ , ((MOVOL:380V , MOVOL:460V) + CAPPRM:ASME , CAPPRM:MHLW + MOVOL:460V) + FREQ:60HZ , CAPPRM:MHLW + COOL:AIR + MOVOL:200V) + CAPPRE:IEC , ((MOVOL:230V , MOVOL:575V) + COOL:AIR , MOVOL:460V) + CAPPRE:ULCUL + CAPPRM:ASME + FREQ:60HZ)	
	Electrical legend:	Energy recovery			

Legend:

CAPPRE:IEC - Component approval electrical:IEC
CAPPRM:ASME - Component approval mechanical:ASME
CAPPRM:MOM - Component approval mechanical:MOM
FREQ:60HZ - Frequency:60 Hz
MOVOL:200V - Supply voltage:200 V
MOVOL:400V - Supply voltage:400 V
MOVOL:575V - Supply voltage:575 V
CAPPRE:ULCUL - Component approval electrical:UL/cUL
CAPPRM:CE - Component approval mechanical:CE
COOL:AIR - Cooling:Air cooled
IDRY:N - Integrated dryer:No
MOVOL:230V - Supply voltage:230 V
MOVOL:460V - Supply voltage:460 V
CAPPRM:AS1210 - Component approval mechanical:AS1210
CAPPRM:MHLW - Component approval mechanical:MHLW
FREQ:50HZ - Frequency:50 Hz
MODEL:GA110VP_16 - Model:GA 110VSD+
MOVOL:380V - Supply voltage:380 V
MOVOL:500V - Supply voltage:500 V

21.23 - Cubicle components GA 110 VSD+ - (200V-380V-460V/60Hz - IEC, 230V-460V-575V/60Hz - UL-cUL, 200V-400V-500V/50Hz - IEC) - Pack (20/07/2017 - 11/12/2018)

((((CAPPRM:AS1210 , CAPPRM:CE , CAPPRM:MHLW , CAPPRM:MOM) + MOVOL:400V , CAPPRM:CE + COOL:AIR + MOVOL:500V) + FREQ:50HZ , ((MOVOL:380V , MOVOL:460V) + CAPPRM:ASME , CAPPRM:MHLW + MOVOL:460V) + FREQ:60HZ) + CAPPRE:IEC , (COOL:AIR + MOVOL:575V , MOVOL:460V) + CAPPRE:ULCUL + CAPPRM:ASME + FREQ:60HZ) + IDRY:N + MODEL:GA110VP_16

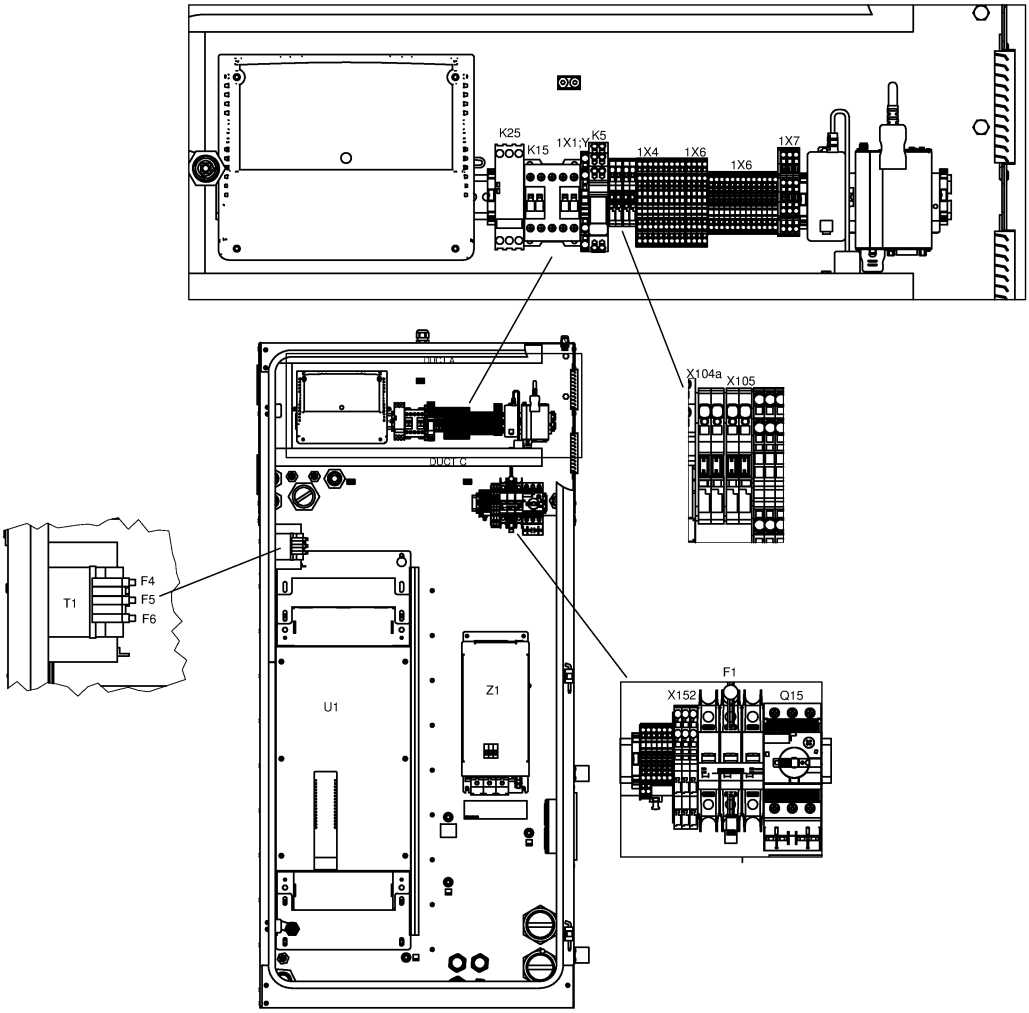

21.23 - Cubicle components GA 110 VSD+ - (200V-380V-460V/60Hz - IEC, 230V-460V-575V/60Hz - UL-cUL, 200V-400V-500V/50Hz - IEC) - Pack (20/07/2017 - 11/12/2018)

((((CAPPRM:AS1210 , CAPPRM:CE , CAPPRM:MHLW , CAPPRM:MOM) + MOVOL:400V , CAPPRM:CE + COOL:AIR + MOVOL:500V) + FREQ:50HZ , ((MOVOL:380V , MOVOL:460V) + CAPPRM:ASME , CAPPRM:MHLW + MOVOL:460V) + FREQ:60HZ) + CAPPRE:IEC , (COOL:AIR + MOVOL:575V , MOVOL:460V) + CAPPRE:ULCUL + CAPPRM:ASME + FREQ:60HZ) + IDRY:N + MODEL:GA110VP_16

Ref	Part Number	Qty	Name	Validity	EL
	0697 9811 12	1	PLUG	**(20/07/2017 - 20/08/2018)** ((((CAPPRM:AS1210 , CAPPRM:CE , CAPPRM:MHLW , CAPPRM:MOM) + MOVOL:400V , CAPPRM:CE + MOVOL:500V , CAPPRM:MHLW + MOVOL:200V) + FREQ:50HZ , ((MOVOL:200V , MOVOL:460V) + CAPPRM:MHLW , (MOVOL:380V , MOVOL:460V) + CAPPRM:ASME) + FREQ:60HZ) + CAPPRE:IEC , (MOVOL:230V , MOVOL:460V , MOVOL:575V) + CAPPRE:ULCUL + CAPPRM:ASME + FREQ:60HZ) + COOL:AIR **(21/08/2018 - 11/12/2018)** ((((CAPPRM:AS1210 , CAPPRM:CE , CAPPRM:MHLW , CAPPRM:MOM) + MOVOL:400V , CAPPRM:CE + COOL:AIR + MOVOL:500V) + FREQ:50HZ , ((MOVOL:380V , MOVOL:460V) + CAPPRM:ASME , CAPPRM:MHLW + MOVOL:460V) + FREQ:60HZ , CAPPRM:MHLW + COOL:AIR + MOVOL:200V) + CAPPRE:IEC , ((MOVOL:230V , MOVOL:575V) + COOL:AIR , MOVOL:460V) + CAPPRE:ULCUL + CAPPRM:ASME + FREQ:60HZ)	
	Electrical legend:	Control circuit of T10			
	0989 3700 43	1	NUT	**(20/07/2017 - 20/08/2018)** ((((CAPPRM:AS1210 , CAPPRM:CE , CAPPRM:MHLW , CAPPRM:MOM) + MOVOL:400V , CAPPRM:CE + MOVOL:500V , CAPPRM:MHLW + MOVOL:200V) + FREQ:50HZ , ((MOVOL:200V , MOVOL:460V) + CAPPRM:MHLW , (MOVOL:380V , MOVOL:460V) + CAPPRM:ASME) + FREQ:60HZ) + CAPPRE:IEC , (MOVOL:230V , MOVOL:460V , MOVOL:575V) + CAPPRE:ULCUL + CAPPRM:ASME + FREQ:60HZ) + COOL:AIR **(21/08/2018 - 11/12/2018)** ((((CAPPRM:AS1210 , CAPPRM:CE , CAPPRM:MHLW , CAPPRM:MOM) + MOVOL:400V , CAPPRM:CE + COOL:AIR + MOVOL:500V) + FREQ:50HZ , ((MOVOL:380V , MOVOL:460V) + CAPPRM:ASME , CAPPRM:MHLW + MOVOL:460V) + FREQ:60HZ , CAPPRM:MHLW + COOL:AIR + MOVOL:200V) + CAPPRE:IEC , ((MOVOL:230V , MOVOL:575V) + COOL:AIR , MOVOL:460V) + CAPPRE:ULCUL + CAPPRM:ASME + FREQ:60HZ)	
	Electrical legend:	Control circuit of T10			

Legend:

CAPPRE:IEC - Component approval electrical:IEC
CAPPRE:ULCUL - Component approval electrical:UL/cUL
CAPPRM:AS1210 - Component approval mechanical:AS1210
CAPPRM:ASME - Component approval mechanical:ASME
CAPPRM:CE - Component approval mechanical:CE
CAPPRM:MHLW - Component approval mechanical:MHLW
CAPPRM:MOM - Component approval mechanical:MOM
COOL:AIR - Cooling:Air cooled
FREQ:50HZ - Frequency:50 Hz
FREQ:60HZ - Frequency:60 Hz
IDRY:N - Integrated dryer:No
MODEL:GA110VP_16 - Model:GA 110VSD+
MOVOL:200V - Supply voltage:200 V
MOVOL:230V - Supply voltage:230 V
MOVOL:380V - Supply voltage:380 V
MOVOL:400V - Supply voltage:400 V
MOVOL:460V - Supply voltage:460 V
MOVOL:500V - Supply voltage:500 V
MOVOL:575V - Supply voltage:575 V

21.24 - Cubicle components GA 110 VSD+ - (200V-380V-460V/60Hz - IEC, 230V-460V-575V/60Hz - UL-cUL, 200V-400V-500V/50Hz - IEC) - Pack (12/12/2018 - 04/02/2020)

((((CAPPRM:AS1210 , CAPPRM:CE , CAPPRM:MHLW , CAPPRM:MOM) + MOVOL:400V , CAPPRM:CE + COOL:AIR + MOVOL:500V) + FREQ:50HZ , ((MOVOL:380V , MOVOL:460V) + CAPPRM:ASME , CAPPRM:MHLW + MOVOL:460V) + FREQ:60HZ) + CAPPRE:IEC , (COOL:AIR + MOVOL:575V , MOVOL:460V) + CAPPRE:ULCUL + CAPPRM:ASME + FREQ:60HZ) + IDRY:N + MODEL:GA110VP_16

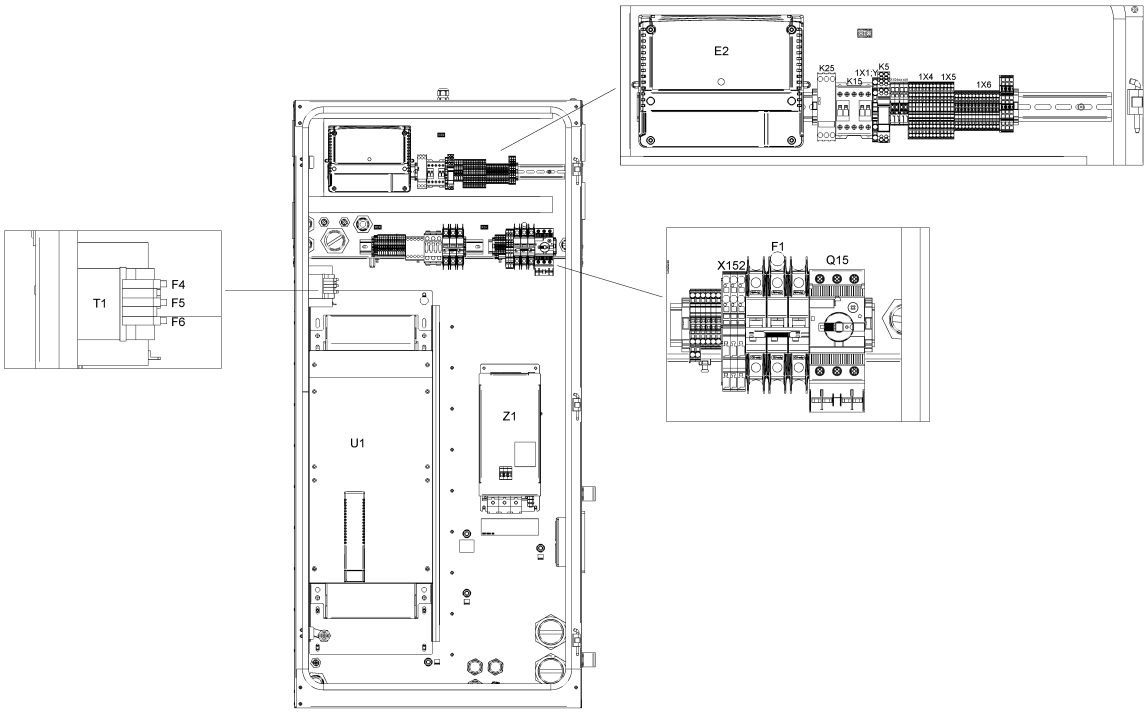

21.24 - Cubicle components GA 110 VSD+ - (200V-380V-460V/60Hz - IEC, 230V-460V-575V/60Hz - UL-cUL, 200V-400V-500V/50Hz - IEC) - Pack (12/12/2018 - 04/02/2020)

((((CAPPRM:AS1210 , CAPPRM:CE , CAPPRM:MHLW , CAPPRM:MOM) + MOVOL:400V , CAPPRM:CE + COOL:AIR + MOVOL:500V) + FREQ:50HZ , ((MOVOL:380V , MOVOL:460V) + CAPPRM:ASME , CAPPRM:MHLW + MOVOL:460V) + FREQ:60HZ) + CAPPRE:IEC , (COOL:AIR + MOVOL:575V , MOVOL:460V) + CAPPRE:ULCUL + CAPPRM:ASME + FREQ:60HZ) + IDRY:N + MODEL:GA110VP_16

Ref	Part Number	Qty	Name	Validity	EL
	1900 2202 32	1	CUBICLE	**(12/12/2018 - 04/02/2020)**	
	9820 3000 31	1	ASSEMBLY DRAWING	**(12/12/2018 - 24/02/2019)** ((((CAPPRM:AS1210 , CAPPRM:CE , CAPPRM:MHLW , CAPPRM:MOM) + MOVOL:400V , CAPPRM:CE + COOL:AIR + MOVOL:500V) + FREQ:50HZ , ((MOVOL:380V , MOVOL:460V) + CAPPRM:ASME , CAPPRM:MHLW + MOVOL:460V) + FREQ:60HZ , CAPPRM:MHLW + COOL:AIR + MOVOL:200V) + CAPPRE:IEC , ((MOVOL:230V , MOVOL:575V) + COOL:AIR , MOVOL:460V) + CAPPRE:ULCUL + CAPPRM:ASME + FREQ:60HZ) **(25/02/2019 - 04/02/2020)** ((((CAPPRM:AS1210 , CAPPRM:CE , CAPPRM:MHLW , CAPPRM:MOM) + MOVOL:400V , CAPPRM:CE + MOVOL:500V , CAPPRM:MHLW + MOVOL:200V) + FREQ:50HZ , ((MOVOL:200V , MOVOL:460V) + CAPPRM:MHLW , (MOVOL:380V , MOVOL:460V) + CAPPRM:ASME) + FREQ:60HZ) + CAPPRE:IEC , (MOVOL:230V , MOVOL:460V , MOVOL:575V) + CAPPRE:ULCUL + CAPPRM:ASME + FREQ:60HZ) + COOL:AIR **(05/02/2020 - 30/12/2027)** (CAPPRE:IEC + CAPPRM:MHLW + MOVOL:200V , CAPPRE:ULCUL + CAPPRM:ASME + FREQ:60HZ + MOVOL:230V) + COOL:AIR	AD
	9820 3000 27	1	SERVICE DIAGRAM	**(12/12/2018 - 24/02/2019)** ((((CAPPRM:AS1210 , CAPPRM:CE , CAPPRM:MHLW , CAPPRM:MOM) + MOVOL:400V , CAPPRM:CE + COOL:AIR + MOVOL:500V) + FREQ:50HZ , ((MOVOL:380V , MOVOL:460V) + CAPPRM:ASME , CAPPRM:MHLW + MOVOL:460V) + FREQ:60HZ , CAPPRM:MHLW + COOL:AIR + MOVOL:200V) + CAPPRE:IEC , ((MOVOL:230V , MOVOL:575V) + COOL:AIR , MOVOL:460V) + CAPPRE:ULCUL + CAPPRM:ASME + FREQ:60HZ) **(25/02/2019 - 04/02/2020)** ((((CAPPRM:AS1210 , CAPPRM:CE , CAPPRM:MHLW , CAPPRM:MOM) + MOVOL:400V , CAPPRM:CE + MOVOL:500V , CAPPRM:MHLW + MOVOL:200V) + FREQ:50HZ , ((MOVOL:200V , MOVOL:460V) + CAPPRM:MHLW , (MOVOL:380V , MOVOL:460V) + CAPPRM:ASME) + FREQ:60HZ) + CAPPRE:IEC , (MOVOL:230V , MOVOL:460V , MOVOL:575V) + CAPPRE:ULCUL + CAPPRM:ASME + FREQ:60HZ) + COOL:AIR **(05/02/2020 - 30/12/2027)** (CAPPRE:IEC + CAPPRM:MHLW + MOVOL:200V , CAPPRE:ULCUL + CAPPRM:ASME + FREQ:60HZ + MOVOL:230V) + COOL:AIR	SD

Legend:

CAPPRE:IEC - Component approval electrical:IEC
CAPPRM:ASME - Component approval mechanical:ASME
CAPPRM:MOM - Component approval mechanical:MOM
FREQ:60HZ - Frequency:60 Hz
MOVOL:200V - Supply voltage:200 V
MOVOL:400V - Supply voltage:400 V
MOVOL:575V - Supply voltage:575 V
CAPPRE:ULCUL - Component approval electrical:UL/cUL
CAPPRM:CE - Component approval mechanical:CE
COOL:AIR - Cooling:Air cooled
IDRY:N - Integrated dryer:No
MOVOL:230V - Supply voltage:230 V
MOVOL:460V - Supply voltage:460 V
CAPPRM:AS1210 - Component approval mechanical:AS1210
CAPPRM:MHLW - Component approval mechanical:MHLW
FREQ:50HZ - Frequency:50 Hz
MODEL:GA110VP_16 - Model:GA 110VSD+
MOVOL:380V - Supply voltage:380 V
MOVOL:500V - Supply voltage:500 V

21.24 - Cubicle components GA 110 VSD+ - (200V-380V-460V/60Hz - IEC, 230V-460V-575V/60Hz - UL-cUL, 200V-400V-500V/50Hz - IEC) - Pack (12/12/2018 - 04/02/2020)

((((CAPPRM:AS1210 , CAPPRM:CE , CAPPRM:MHLW , CAPPRM:MOM) + MOVOL:400V , CAPPRM:CE + COOL:AIR + MOVOL:500V) + FREQ:50HZ , ((MOVOL:380V , MOVOL:460V) + CAPPRM:ASME , CAPPRM:MHLW + MOVOL:460V) + FREQ:60HZ) + CAPPRE:IEC , (COOL:AIR + MOVOL:575V , MOVOL:460V) + CAPPRE:ULCUL + CAPPRM:ASME + FREQ:60HZ) + IDRY:N + MODEL:GA110VP_16

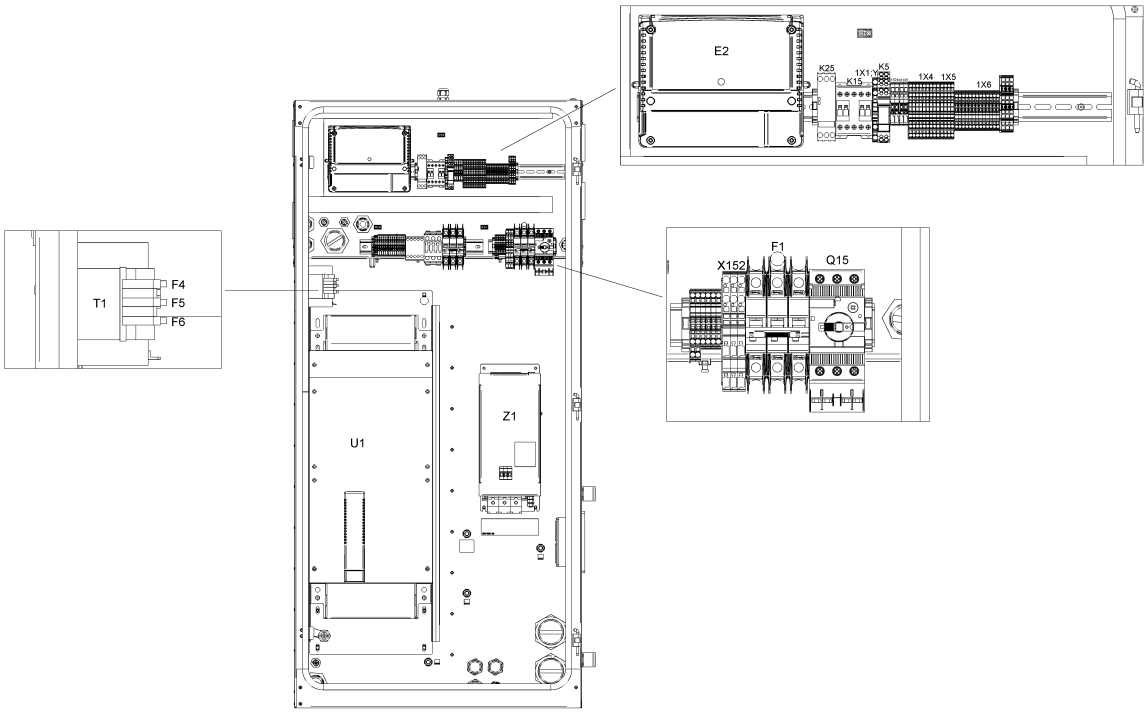

21.24 - Cubicle components GA 110 VSD+ - (200V-380V-460V/60Hz - IEC, 230V-460V-575V/60Hz - UL-cUL, 200V-400V-500V/50Hz - IEC) - Pack (12/12/2018 - 04/02/2020)

((((CAPPRM:AS1210 , CAPPRM:CE , CAPPRM:MHLW , CAPPRM:MOM) + MOVOL:400V , CAPPRM:CE + COOL:AIR + MOVOL:500V) + FREQ:50HZ , ((MOVOL:380V , MOVOL:460V) + CAPPRM:ASME , CAPPRM:MHLW + MOVOL:460V) + FREQ:60HZ) + CAPPRE:IEC , (COOL:AIR + MOVOL:575V , MOVOL:460V) + CAPPRE:ULCUL + CAPPRM:ASME + FREQ:60HZ) + IDRY:N + MODEL:GA110VP_16

Ref	Part Number	Qty	Name	Validity	EL
	1622 3798 72	1	WIRE HARNESS	**(12/12/2018 - 24/02/2019)** ((((CAPPRM:AS1210 , CAPPRM:CE , CAPPRM:MHLW , CAPPRM:MOM) + MOVOL:400V , CAPPRM:CE + COOL:AIR + MOVOL:500V) + FREQ:50HZ , ((MOVOL:380V , MOVOL:460V) + CAPPRM:ASME , CAPPRM:MHLW + MOVOL:460V) + FREQ:60HZ , CAPPRM:MHLW + COOL:AIR + MOVOL:200V) + CAPPRE:IEC , ((MOVOL:230V , MOVOL:575V) + COOL:AIR , MOVOL:460V) + CAPPRE:ULCUL + CAPPRM:ASME + FREQ:60HZ) **(25/02/2019 - 04/02/2020)** ((((CAPPRM:AS1210 , CAPPRM:CE , CAPPRM:MHLW , CAPPRM:MOM) + MOVOL:400V , CAPPRM:CE + MOVOL:500V , CAPPRM:MHLW + MOVOL:200V) + FREQ:50HZ , ((MOVOL:200V , MOVOL:460V) + CAPPRM:MHLW , (MOVOL:380V , MOVOL:460V) + CAPPRM:ASME) + FREQ:60HZ) + CAPPRE:IEC , (MOVOL:230V , MOVOL:460V , MOVOL:575V) + CAPPRE:ULCUL + CAPPRM:ASME + FREQ:60HZ) + COOL:AIR **(05/02/2020 - 30/12/2027)** (CAPPRE:IEC + CAPPRM:MHLW + MOVOL:200V , CAPPRE:ULCUL + CAPPRM:ASME + FREQ:60HZ + MOVOL:230V) + COOL:AIR	Comm Cable
	1622 5099 04	1	DI CHANE CABLE (1400MM)	**(12/12/2018 - 24/02/2019)** ((((CAPPRM:AS1210 , CAPPRM:CE , CAPPRM:MHLW , CAPPRM:MOM) + MOVOL:400V , CAPPRM:CE + COOL:AIR + MOVOL:500V) + FREQ:50HZ , ((MOVOL:380V , MOVOL:460V) + CAPPRM:ASME , CAPPRM:MHLW + MOVOL:460V) + FREQ:60HZ , CAPPRM:MHLW + COOL:AIR + MOVOL:200V) + CAPPRE:IEC , ((MOVOL:230V , MOVOL:575V) + COOL:AIR , MOVOL:460V) + CAPPRE:ULCUL + CAPPRM:ASME + FREQ:60HZ) **(25/02/2019 - 04/02/2020)** ((((CAPPRM:AS1210 , CAPPRM:CE , CAPPRM:MHLW , CAPPRM:MOM) + MOVOL:400V , CAPPRM:CE + MOVOL:500V , CAPPRM:MHLW + MOVOL:200V) + FREQ:50HZ , ((MOVOL:200V , MOVOL:460V) + CAPPRM:MHLW , (MOVOL:380V , MOVOL:460V) + CAPPRM:ASME) + FREQ:60HZ) + CAPPRE:IEC , (MOVOL:230V , MOVOL:460V , MOVOL:575V) + CAPPRE:ULCUL + CAPPRM:ASME + FREQ:60HZ) + COOL:AIR **(05/02/2020 - 30/12/2027)** (CAPPRE:IEC + CAPPRM:MHLW + MOVOL:200V , CAPPRE:ULCUL + CAPPRM:ASME + FREQ:60HZ + MOVOL:230V) + COOL:AIR	

Electrical legend: Comm Cable Loose supply

Legend:

CAPPRE:IEC - Component approval electrical:IEC
CAPPRM:ASME - Component approval mechanical:ASME
CAPPRM:MOM - Component approval mechanical:MOM
FREQ:60HZ - Frequency:60 Hz
MOVOL:200V - Supply voltage:200 V
MOVOL:400V - Supply voltage:400 V
MOVOL:575V - Supply voltage:575 V
CAPPRE:ULCUL - Component approval electrical:UL/cUL
CAPPRM:CE - Component approval mechanical:CE
COOL:AIR - Cooling:Air cooled
IDRY:N - Integrated dryer:No
MOVOL:230V - Supply voltage:230 V
MOVOL:460V - Supply voltage:460 V
CAPPRM:AS1210 - Component approval mechanical:AS1210
CAPPRM:MHLW - Component approval mechanical:MHLW
FREQ:50HZ - Frequency:50 Hz
MODEL:GA110VP_16 - Model:GA 110VSD+
MOVOL:380V - Supply voltage:380 V
MOVOL:500V - Supply voltage:500 V

21.24 - Cubicle components GA 110 VSD+ - (200V-380V-460V/60Hz - IEC, 230V-460V-575V/60Hz - UL-cUL, 200V-400V-500V/50Hz - IEC) - Pack (12/12/2018 - 04/02/2020)

((((CAPPRM:AS1210 , CAPPRM:CE , CAPPRM:MHLW , CAPPRM:MOM) + MOVOL:400V , CAPPRM:CE + COOL:AIR + MOVOL:500V) + FREQ:50HZ , ((MOVOL:380V , MOVOL:460V) + CAPPRM:ASME , CAPPRM:MHLW + MOVOL:460V) + FREQ:60HZ) + CAPPRE:IEC , (COOL:AIR + MOVOL:575V , MOVOL:460V) + CAPPRE:ULCUL + CAPPRM:ASME + FREQ:60HZ) + IDRY:N + MODEL:GA110VP_16

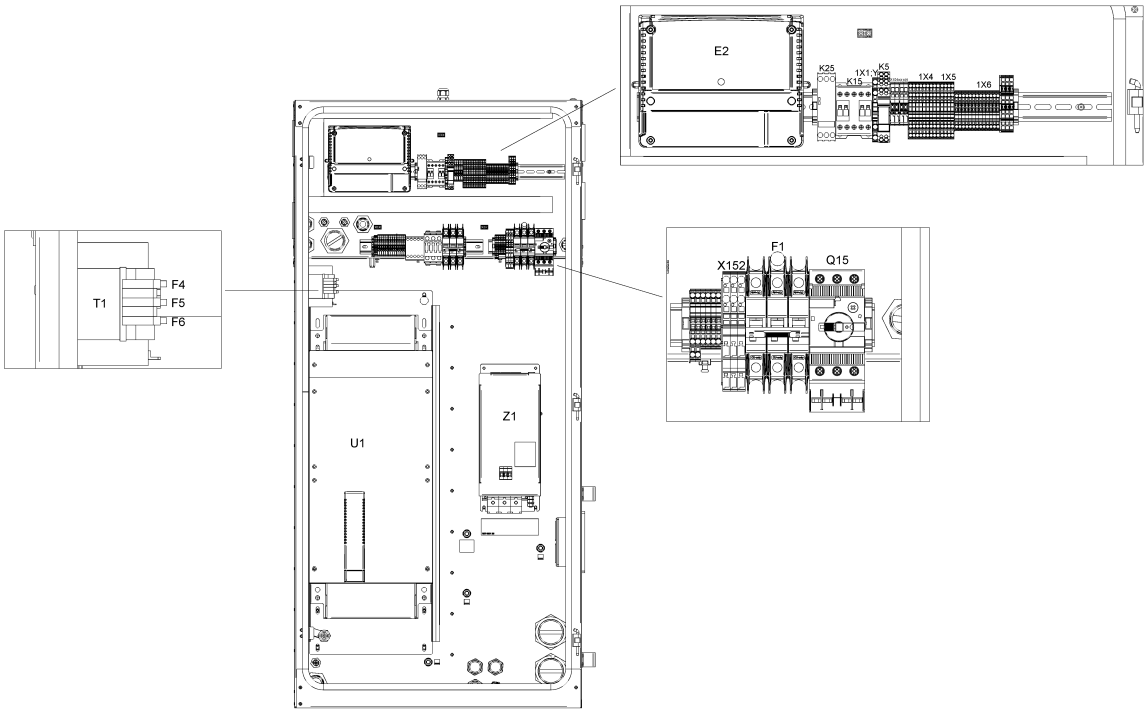

21.24 - Cubicle components GA 110 VSD+ - (200V-380V-460V/60Hz - IEC, 230V-460V-575V/60Hz - UL-cUL, 200V-400V-500V/50Hz - IEC) - Pack (12/12/2018 - 04/02/2020)

((((CAPPRM:AS1210 , CAPPRM:CE , CAPPRM:MHLW , CAPPRM:MOM) + MOVOL:400V , CAPPRM:CE + COOL:AIR + MOVOL:500V) + FREQ:50HZ , ((MOVOL:380V , MOVOL:460V) + CAPPRM:ASME , CAPPRM:MHLW + MOVOL:460V) + FREQ:60HZ) + CAPPRE:IEC , (COOL:AIR + MOVOL:575V , MOVOL:460V) + CAPPRE:ULCUL + CAPPRM:ASME + FREQ:60HZ) + IDRY:N + MODEL:GA110VP_16

Ref	Part Number	Qty	Name	Validity	EL
	1649 8001 22	1	CUBICLE MSA	**(12/12/2018 - 24/02/2019)** ((((CAPPRM:AS1210 , CAPPRM:CE , CAPPRM:MHLW , CAPPRM:MOM) + MOVOL:400V , CAPPRM:CE + COOL:AIR + MOVOL:500V) + FREQ:50HZ , ((MOVOL:380V , MOVOL:460V) + CAPPRM:ASME , CAPPRM:MHLW + MOVOL:460V) + FREQ:60HZ , CAPPRM:MHLW + COOL:AIR + MOVOL:200V) + CAPPRE:IEC , ((MOVOL:230V , MOVOL:575V) + COOL:AIR , MOVOL:460V) + CAPPRE:ULCUL + CAPPRM:ASME + FREQ:60HZ) **(25/02/2019 - 04/02/2020)** ((((CAPPRM:AS1210 , CAPPRM:CE , CAPPRM:MHLW , CAPPRM:MOM) + MOVOL:400V , CAPPRM:CE + MOVOL:500V , CAPPRM:MHLW + MOVOL:200V) + FREQ:50HZ , ((MOVOL:200V , MOVOL:460V) + CAPPRM:MHLW , (MOVOL:380V , MOVOL:460V) + CAPPRM:ASME) + FREQ:60HZ) + CAPPRE:IEC , (MOVOL:230V , MOVOL:460V , MOVOL:575V) + CAPPRE:ULCUL + CAPPRM:ASME + FREQ:60HZ) + COOL:AIR **(05/02/2020 - 30/12/2027)** (CAPPRE:IEC + CAPPRM:MHLW + MOVOL:200V , CAPPRE:ULCUL + CAPPRM:ASME + FREQ:60HZ + MOVOL:230V) + COOL:AIR	MSA
	1649 8001 31	1	PLATE NEOS "E"	**(12/12/2018 - 24/02/2019)** ((((CAPPRM:AS1210 , CAPPRM:CE , CAPPRM:MHLW , CAPPRM:MOM) + MOVOL:400V , CAPPRM:CE + COOL:AIR + MOVOL:500V) + FREQ:50HZ , ((MOVOL:380V , MOVOL:460V) + CAPPRM:ASME , CAPPRM:MHLW + MOVOL:460V) + FREQ:60HZ , CAPPRM:MHLW + COOL:AIR + MOVOL:200V) + CAPPRE:IEC , ((MOVOL:230V , MOVOL:575V) + COOL:AIR , MOVOL:460V) + CAPPRE:ULCUL + CAPPRM:ASME + FREQ:60HZ) **(25/02/2019 - 04/02/2020)** ((((CAPPRM:AS1210 , CAPPRM:CE , CAPPRM:MHLW , CAPPRM:MOM) + MOVOL:400V , CAPPRM:CE + MOVOL:500V , CAPPRM:MHLW + MOVOL:200V) + FREQ:50HZ , ((MOVOL:200V , MOVOL:460V) + CAPPRM:MHLW , (MOVOL:380V , MOVOL:460V) + CAPPRM:ASME) + FREQ:60HZ) + CAPPRE:IEC , (MOVOL:230V , MOVOL:460V , MOVOL:575V) + CAPPRE:ULCUL + CAPPRM:ASME + FREQ:60HZ) + COOL:AIR **(05/02/2020 - 30/12/2027)** (CAPPRE:IEC + CAPPRM:MHLW + MOVOL:200V , CAPPRE:ULCUL + CAPPRM:ASME + FREQ:60HZ + MOVOL:230V) + COOL:AIR	

Electrical legend: Mounting plate

Legend:

CAPPRE:IEC - Component approval electrical:IEC
CAPPRE:ULCUL - Component approval electrical:UL/cUL
CAPPRM:AS1210 - Component approval mechanical:AS1210
CAPPRM:ASME - Component approval mechanical:ASME
CAPPRM:CE - Component approval mechanical:CE
CAPPRM:MHLW - Component approval mechanical:MHLW
CAPPRM:MOM - Component approval mechanical:MOM
COOL:AIR - Cooling:Air cooled
FREQ:50HZ - Frequency:50 Hz
FREQ:60HZ - Frequency:60 Hz
IDRY:N - Integrated dryer:No
MODEL:GA110VP_16 - Model:GA 110VSD+
MOVOL:200V - Supply voltage:200 V
MOVOL:230V - Supply voltage:230 V
MOVOL:380V - Supply voltage:380 V
MOVOL:400V - Supply voltage:400 V
MOVOL:460V - Supply voltage:460 V
MOVOL:500V - Supply voltage:500 V
MOVOL:575V - Supply voltage:575 V

21.24 - Cubicle components GA 110 VSD+ - (200V-380V-460V/60Hz - IEC, 230V-460V-575V/60Hz - UL-cUL, 200V-400V-500V/50Hz - IEC) - Pack (12/12/2018 - 04/02/2020)

((((CAPPRM:AS1210 , CAPPRM:CE , CAPPRM:MHLW , CAPPRM:MOM) + MOVOL:400V , CAPPRM:CE + COOL:AIR + MOVOL:500V) + FREQ:50HZ , ((MOVOL:380V , MOVOL:460V) + CAPPRM:ASME , CAPPRM:MHLW + MOVOL:460V) + FREQ:60HZ) + CAPPRE:IEC , (COOL:AIR + MOVOL:575V , MOVOL:460V) + CAPPRE:ULCUL + CAPPRM:ASME + FREQ:60HZ) + IDRY:N + MODEL:GA110VP_16

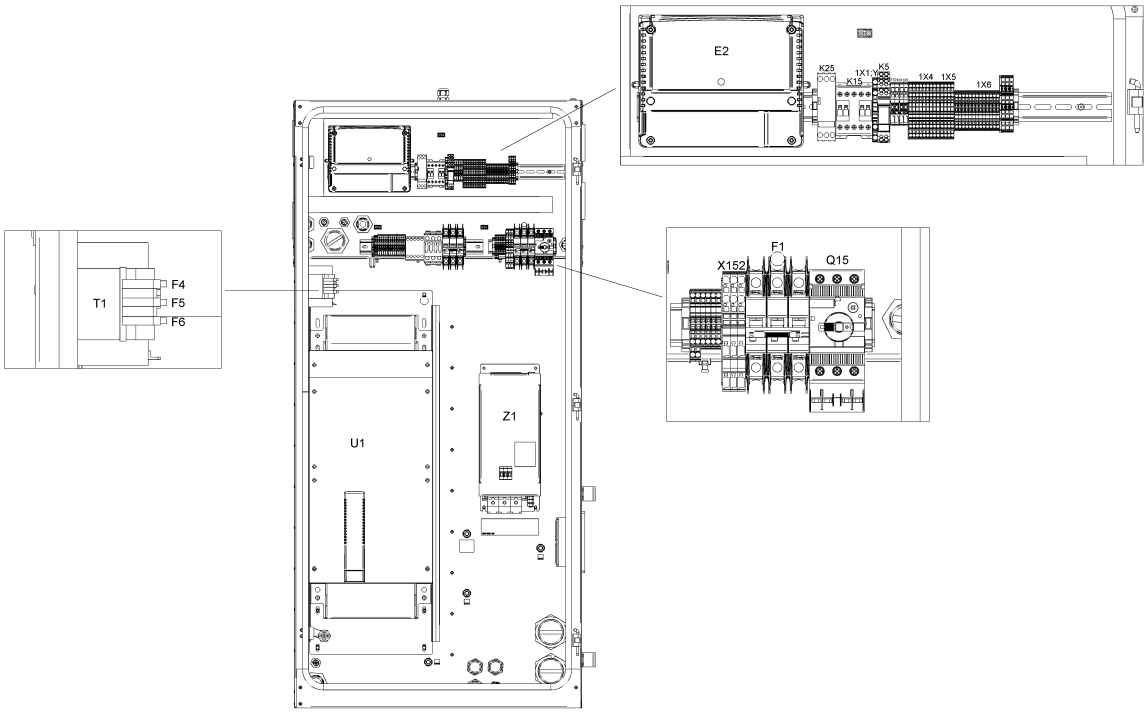

21.24 - Cubicle components GA 110 VSD+ - (200V-380V-460V/60Hz - IEC, 230V-460V-575V/60Hz - UL-cUL, 200V-400V-500V/50Hz - IEC) - Pack (12/12/2018 - 04/02/2020)

((((CAPPRM:AS1210 , CAPPRM:CE , CAPPRM:MHLW , CAPPRM:MOM) + MOVOL:400V , CAPPRM:CE + COOL:AIR + MOVOL:500V) + FREQ:50HZ , ((MOVOL:380V , MOVOL:460V) + CAPPRM:ASME , CAPPRM:MHLW + MOVOL:460V) + FREQ:60HZ) + CAPPRE:IEC , (COOL:AIR + MOVOL:575V , MOVOL:460V) + CAPPRE:ULCUL + CAPPRM:ASME + FREQ:60HZ) + IDRY:N + MODEL:GA110VP_16

Ref	Part Number	Qty	Name	Validity	EL
	1649 8003 85	1	MOUNTING PLATE-NEOS D/E	**(12/12/2018 - 24/02/2019)** ((((CAPPRM:AS1210 , CAPPRM:CE , CAPPRM:MHLW , CAPPRM:MOM) + MOVOL:400V , CAPPRM:CE + COOL:AIR + MOVOL:500V) + FREQ:50HZ , ((MOVOL:380V , MOVOL:460V) + CAPPRM:ASME , CAPPRM:MHLW + MOVOL:460V) + FREQ:60HZ , CAPPRM:MHLW + COOL:AIR + MOVOL:200V) + CAPPRE:IEC , ((MOVOL:230V , MOVOL:575V) + COOL:AIR , MOVOL:460V) + CAPPRE:ULCUL + CAPPRM:ASME + FREQ:60HZ) **(25/02/2019 - 04/02/2020)** ((((CAPPRM:AS1210 , CAPPRM:CE , CAPPRM:MHLW , CAPPRM:MOM) + MOVOL:400V , CAPPRM:CE + MOVOL:500V , CAPPRM:MHLW + MOVOL:200V) + FREQ:50HZ , ((MOVOL:200V , MOVOL:460V) + CAPPRM:MHLW , (MOVOL:380V , MOVOL:460V) + CAPPRM:ASME) + FREQ:60HZ) + CAPPRE:IEC , (MOVOL:230V , MOVOL:460V , MOVOL:575V) + CAPPRE:ULCUL + CAPPRM:ASME + FREQ:60HZ) + COOL:AIR **(05/02/2020 - 30/12/2027)** (CAPPRE:IEC + CAPPRM:MHLW + MOVOL:200V , CAPPRE:ULCUL + CAPPRM:ASME + FREQ:60HZ + MOVOL:230V) + COOL:AIR	
	Electrical legend:	Mounting plate			
	1649 8002 39	1	WIRE HARNESS	**(12/12/2018 - 24/02/2019)** ((((CAPPRM:AS1210 , CAPPRM:CE , CAPPRM:MHLW , CAPPRM:MOM) + MOVOL:400V , CAPPRM:CE + COOL:AIR + MOVOL:500V) + FREQ:50HZ , ((MOVOL:380V , MOVOL:460V) + CAPPRM:ASME , CAPPRM:MHLW + MOVOL:460V) + FREQ:60HZ , CAPPRM:MHLW + COOL:AIR + MOVOL:200V) + CAPPRE:IEC , ((MOVOL:230V , MOVOL:575V) + COOL:AIR , MOVOL:460V) + CAPPRE:ULCUL + CAPPRM:ASME + FREQ:60HZ) **(25/02/2019 - 04/02/2020)** ((((CAPPRM:AS1210 , CAPPRM:CE , CAPPRM:MHLW , CAPPRM:MOM) + MOVOL:400V , CAPPRM:CE + MOVOL:500V , CAPPRM:MHLW + MOVOL:200V) + FREQ:50HZ , ((MOVOL:200V , MOVOL:460V) + CAPPRM:MHLW , (MOVOL:380V , MOVOL:460V) + CAPPRM:ASME) + FREQ:60HZ) + CAPPRE:IEC , (MOVOL:230V , MOVOL:460V , MOVOL:575V) + CAPPRE:ULCUL + CAPPRM:ASME + FREQ:60HZ) + COOL:AIR **(05/02/2020 - 30/12/2027)** (CAPPRE:IEC + CAPPRM:MHLW + MOVOL:200V , CAPPRE:ULCUL + CAPPRM:ASME + FREQ:60HZ + MOVOL:230V) + COOL:AIR	WH

Legend:

CAPPRE:IEC - Component approval electrical:IEC
CAPPRM:ASME - Component approval mechanical:ASME
CAPPRM:MOM - Component approval mechanical:MOM
FREQ:60HZ - Frequency:60 Hz
MOVOL:200V - Supply voltage:200 V
MOVOL:400V - Supply voltage:400 V
MOVOL:575V - Supply voltage:575 V
CAPPRE:ULCUL - Component approval electrical:UL/cUL
CAPPRM:CE - Component approval mechanical:CE
COOL:AIR - Cooling:Air cooled
IDRY:N - Integrated dryer:No
MOVOL:230V - Supply voltage:230 V
MOVOL:460V - Supply voltage:460 V
CAPPRM:AS1210 - Component approval mechanical:AS1210
CAPPRM:MHLW - Component approval mechanical:MHLW
FREQ:50HZ - Frequency:50 Hz
MODEL:GA110VP_16 - Model:GA 110VSD+
MOVOL:380V - Supply voltage:380 V
MOVOL:500V - Supply voltage:500 V

21.24 - Cubicle components GA 110 VSD+ - (200V-380V-460V/60Hz - IEC, 230V-460V-575V/60Hz - UL-cUL, 200V-400V-500V/50Hz - IEC) - Pack (12/12/2018 - 04/02/2020)

((((CAPPRM:AS1210 , CAPPRM:CE , CAPPRM:MHLW , CAPPRM:MOM) + MOVOL:400V , CAPPRM:CE + COOL:AIR + MOVOL:500V) + FREQ:50HZ , ((MOVOL:380V , MOVOL:460V) + CAPPRM:ASME , CAPPRM:MHLW + MOVOL:460V) + FREQ:60HZ) + CAPPRE:IEC , (COOL:AIR + MOVOL:575V , MOVOL:460V) + CAPPRE:ULCUL + CAPPRM:ASME + FREQ:60HZ) + IDRY:N + MODEL:GA110VP_16

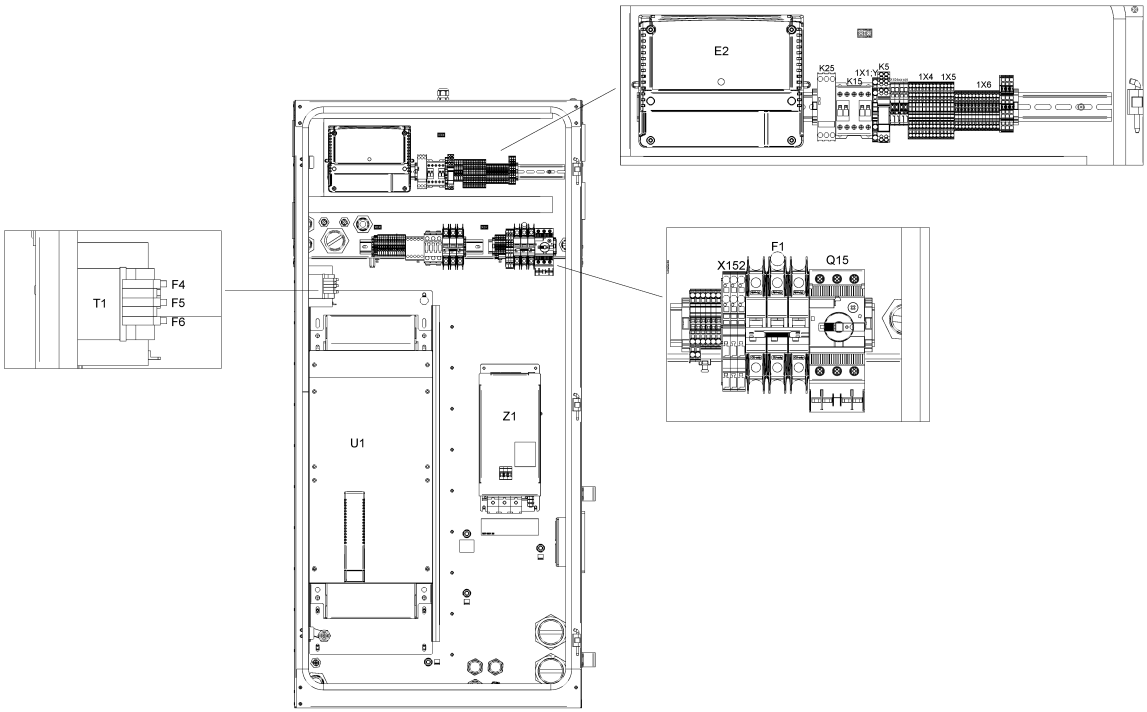

21.24 - Cubicle components GA 110 VSD+ - (200V-380V-460V/60Hz - IEC, 230V-460V-575V/60Hz - UL-cUL, 200V-400V-500V/50Hz - IEC) - Pack (12/12/2018 - 04/02/2020)

((((CAPPRM:AS1210 , CAPPRM:CE , CAPPRM:MHLW , CAPPRM:MOM) + MOVOL:400V , CAPPRM:CE + COOL:AIR + MOVOL:500V) + FREQ:50HZ , ((MOVOL:380V , MOVOL:460V) + CAPPRM:ASME , CAPPRM:MHLW + MOVOL:460V) + FREQ:60HZ) + CAPPRE:IEC , (COOL:AIR + MOVOL:575V , MOVOL:460V) + CAPPRE:ULCUL + CAPPRM:ASME + FREQ:60HZ) + IDRY:N + MODEL:GA110VP_16

Ref	Part Number	Qty	Name	Validity	EL
	1649 8002 40	1	WIRE HARNESS	**(12/12/2018 - 24/02/2019)** ((((CAPPRM:AS1210 , CAPPRM:CE , CAPPRM:MHLW , CAPPRM:MOM) + MOVOL:400V , CAPPRM:CE + COOL:AIR + MOVOL:500V) + FREQ:50HZ , ((MOVOL:380V , MOVOL:460V) + CAPPRM:ASME , CAPPRM:MHLW + MOVOL:460V) + FREQ:60HZ , CAPPRM:MHLW + COOL:AIR + MOVOL:200V) + CAPPRE:IEC , ((MOVOL:230V , MOVOL:575V) + COOL:AIR , MOVOL:460V) + CAPPRE:ULCUL + CAPPRM:ASME + FREQ:60HZ) **(25/02/2019 - 04/02/2020)** ((((CAPPRM:AS1210 , CAPPRM:CE , CAPPRM:MHLW , CAPPRM:MOM) + MOVOL:400V , CAPPRM:CE + MOVOL:500V , CAPPRM:MHLW + MOVOL:200V) + FREQ:50HZ , ((MOVOL:200V , MOVOL:460V) + CAPPRM:MHLW , (MOVOL:380V , MOVOL:460V) + CAPPRM:ASME) + FREQ:60HZ) + CAPPRE:IEC , (MOVOL:230V , MOVOL:460V , MOVOL:575V) + CAPPRE:ULCUL + CAPPRM:ASME + FREQ:60HZ) + COOL:AIR **(05/02/2020 - 30/12/2027)** (CAPPRE:IEC + CAPPRM:MHLW + MOVOL:200V , CAPPRE:ULCUL + CAPPRM:ASME + FREQ:60HZ + MOVOL:230V) + COOL:AIR	WH
	1649 8002 73	1	WIRE HARNESS	**(12/12/2018 - 24/02/2019)** ((((CAPPRM:AS1210 , CAPPRM:CE , CAPPRM:MHLW , CAPPRM:MOM) + MOVOL:400V , CAPPRM:CE + COOL:AIR + MOVOL:500V) + FREQ:50HZ , ((MOVOL:380V , MOVOL:460V) + CAPPRM:ASME , CAPPRM:MHLW + MOVOL:460V) + FREQ:60HZ , CAPPRM:MHLW + COOL:AIR + MOVOL:200V) + CAPPRE:IEC , ((MOVOL:230V , MOVOL:575V) + COOL:AIR , MOVOL:460V) + CAPPRE:ULCUL + CAPPRM:ASME + FREQ:60HZ) **(25/02/2019 - 04/02/2020)** ((((CAPPRM:AS1210 , CAPPRM:CE , CAPPRM:MHLW , CAPPRM:MOM) + MOVOL:400V , CAPPRM:CE + MOVOL:500V , CAPPRM:MHLW + MOVOL:200V) + FREQ:50HZ , ((MOVOL:200V , MOVOL:460V) + CAPPRM:MHLW , (MOVOL:380V , MOVOL:460V) + CAPPRM:ASME) + FREQ:60HZ) + CAPPRE:IEC , (MOVOL:230V , MOVOL:460V , MOVOL:575V) + CAPPRE:ULCUL + CAPPRM:ASME + FREQ:60HZ) + COOL:AIR **(05/02/2020 - 30/12/2027)** (CAPPRE:IEC + CAPPRM:MHLW + MOVOL:200V , CAPPRE:ULCUL + CAPPRM:ASME + FREQ:60HZ + MOVOL:230V) + COOL:AIR	

Electrical legend: Pack Drain + Air filter switch

Legend:

CAPPRE:IEC - Component approval electrical:IEC
CAPPRE:ULCUL - Component approval electrical:UL/cUL
CAPPRM:AS1210 - Component approval mechanical:AS1210
CAPPRM:ASME - Component approval mechanical:ASME
CAPPRM:CE - Component approval mechanical:CE
CAPPRM:MHLW - Component approval mechanical:MHLW
CAPPRM:MOM - Component approval mechanical:MOM
COOL:AIR - Cooling:Air cooled
FREQ:50HZ - Frequency:50 Hz
FREQ:60HZ - Frequency:60 Hz
IDRY:N - Integrated dryer:No
MODEL:GA110VP_16 - Model:GA 110VSD+
MOVOL:200V - Supply voltage:200 V
MOVOL:230V - Supply voltage:230 V
MOVOL:380V - Supply voltage:380 V
MOVOL:400V - Supply voltage:400 V
MOVOL:460V - Supply voltage:460 V
MOVOL:500V - Supply voltage:500 V
MOVOL:575V - Supply voltage:575 V

21.24 - Cubicle components GA 110 VSD+ - (200V-380V-460V/60Hz - IEC, 230V-460V-575V/60Hz - UL-cUL, 200V-400V-500V/50Hz - IEC) - Pack (12/12/2018 - 04/02/2020)

((((CAPPRM:AS1210 , CAPPRM:CE , CAPPRM:MHLW , CAPPRM:MOM) + MOVOL:400V , CAPPRM:CE + COOL:AIR + MOVOL:500V) + FREQ:50HZ , ((MOVOL:380V , MOVOL:460V) + CAPPRM:ASME , CAPPRM:MHLW + MOVOL:460V) + FREQ:60HZ) + CAPPRE:IEC , (COOL:AIR + MOVOL:575V , MOVOL:460V) + CAPPRE:ULCUL + CAPPRM:ASME + FREQ:60HZ) + IDRY:N + MODEL:GA110VP_16

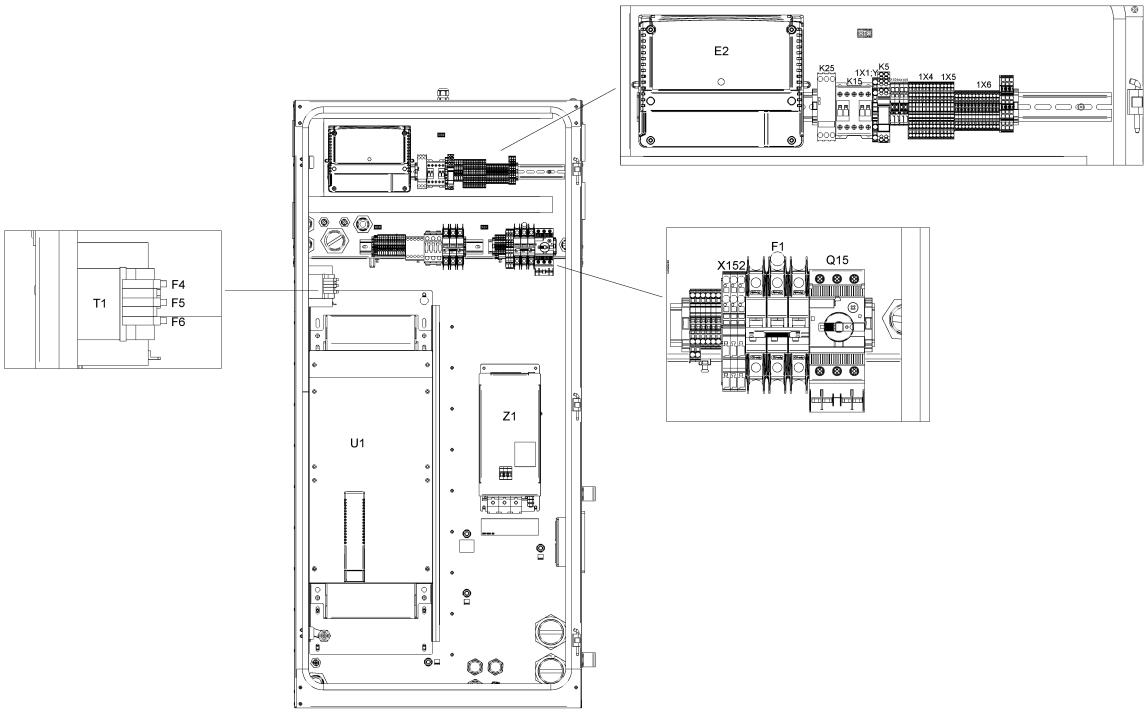

Ref	Part Number	Qty	Name	Validity	EL
	1649 8002 75	1	WIRE HARNESS	**(12/12/2018 - 24/02/2019)** ((((CAPPRM:AS1210 , CAPPRM:CE , CAPPRM:MHLW , CAPPRM:MOM) + MOVOL:400V , CAPPRM:CE + COOL:AIR + MOVOL:500V) + FREQ:50HZ , ((MOVOL:380V , MOVOL:460V) + CAPPRM:ASME , CAPPRM:MHLW + MOVOL:460V) + FREQ:60HZ , CAPPRM:MHLW + COOL:AIR + MOVOL:200V) + CAPPRE:IEC , ((MOVOL:230V , MOVOL:575V) + COOL:AIR , MOVOL:460V) + CAPPRE:ULCUL + CAPPRM:ASME + FREQ:60HZ) **(25/02/2019 - 04/02/2020)** ((((CAPPRM:AS1210 , CAPPRM:CE , CAPPRM:MHLW , CAPPRM:MOM) + MOVOL:400V , CAPPRM:CE + MOVOL:500V , CAPPRM:MHLW + MOVOL:200V) + FREQ:50HZ , ((MOVOL:200V , MOVOL:460V) + CAPPRM:MHLW , (MOVOL:380V , MOVOL:460V) + CAPPRM:ASME) + FREQ:60HZ) + CAPPRE:IEC , (MOVOL:230V , MOVOL:460V , MOVOL:575V) + CAPPRE:ULCUL + CAPPRM:ASME + FREQ:60HZ) + COOL:AIR **(05/02/2020 - 30/12/2027)** (CAPPRE:IEC + CAPPRM:MHLW + MOVOL:200V , CAPPRE:ULCUL + CAPPRM:ASME + FREQ:60HZ + MOVOL:230V) + COOL:AIR	
	Electrical legend:	Relative Humidity sensor			
•	1089 9320 10	1	TEMPERATURE SENSOR	**(05/02/2020 - 30/12/2027)** (CAPPRE:IEC + CAPPRM:MHLW + MOVOL:200V , CAPPRE:ULCUL + CAPPRM:ASME + FREQ:60HZ + MOVOL:230V) + COOL:AIR **(22/07/2019 - 04/02/2020)** ((((CAPPRM:AS1210 , CAPPRM:CE , CAPPRM:MHLW , CAPPRM:MOM) + MOVOL:400V , CAPPRM:CE + MOVOL:500V , CAPPRM:MHLW + MOVOL:200V) + FREQ:50HZ , ((MOVOL:200V , MOVOL:460V) + CAPPRM:MHLW , (MOVOL:380V , MOVOL:460V) + CAPPRM:ASME) + FREQ:60HZ) + CAPPRE:IEC , (MOVOL:230V , MOVOL:460V , MOVOL:575V) + CAPPRE:ULCUL + CAPPRM:ASME + FREQ:60HZ) + COOL:AIR	
	1649 8001 43	3	MOTOR CABLE	**(12/12/2018 - 24/02/2019)** ((((CAPPRM:AS1210 , CAPPRM:CE , CAPPRM:MHLW , CAPPRM:MOM) + MOVOL:400V , CAPPRM:CE + COOL:AIR + MOVOL:500V) + FREQ:50HZ , ((MOVOL:380V , MOVOL:460V) + CAPPRM:ASME , CAPPRM:MHLW + MOVOL:460V) + FREQ:60HZ , CAPPRM:MHLW + COOL:AIR + MOVOL:200V) + CAPPRE:IEC , ((MOVOL:230V , MOVOL:575V) + COOL:AIR , MOVOL:460V) + CAPPRE:ULCUL + CAPPRM:ASME + FREQ:60HZ) **(25/02/2019 - 04/02/2020)** ((((CAPPRM:AS1210 , CAPPRM:CE , CAPPRM:MHLW , CAPPRM:MOM) + MOVOL:400V , CAPPRM:CE + MOVOL:500V , CAPPRM:MHLW + MOVOL:200V) + FREQ:50HZ , ((MOVOL:200V , MOVOL:460V) + CAPPRM:MHLW , (MOVOL:380V , MOVOL:460V) + CAPPRM:ASME) + FREQ:60HZ) + CAPPRE:IEC , (MOVOL:230V , MOVOL:460V , MOVOL:575V) + CAPPRE:ULCUL + CAPPRM:ASME + FREQ:60HZ) + COOL:AIR **(05/02/2020 - 30/12/2027)** (CAPPRE:IEC + CAPPRM:MHLW + MOVOL:200V , CAPPRE:ULCUL + CAPPRM:ASME + FREQ:60HZ + MOVOL:230V) + COOL:AIR	
	Electrical legend:	Motor conduit			

Legend:

CAPPRE:IEC - Component approval electrical:IEC
CAPPRE:ULCUL - Component approval electrical:UL/cUL
CAPPRM:AS1210 - Component approval mechanical:AS1210
CAPPRM:ASME - Component approval mechanical:ASME
CAPPRM:CE - Component approval mechanical:CE
CAPPRM:MHLW - Component approval mechanical:MHLW
CAPPRM:MOM - Component approval mechanical:MOM
COOL:AIR - Cooling:Air cooled
FREQ:50HZ - Frequency:50 Hz
FREQ:60HZ - Frequency:60 Hz
IDRY:N - Integrated dryer:No
MODEL:GA110VP_16 - Model:GA 110VSD+
MOVOL:200V - Supply voltage:200 V
MOVOL:230V - Supply voltage:230 V
MOVOL:380V - Supply voltage:380 V
MOVOL:400V - Supply voltage:400 V
MOVOL:460V - Supply voltage:460 V
MOVOL:500V - Supply voltage:500 V
MOVOL:575V - Supply voltage:575 V

21.24 - Cubicle components GA 110 VSD+ - (200V-380V-460V/60Hz - IEC, 230V-460V-575V/60Hz - UL-cUL, 200V-400V-500V/50Hz - IEC) - Pack (12/12/2018 - 04/02/2020)

((((CAPPRM:AS1210 , CAPPRM:CE , CAPPRM:MHLW , CAPPRM:MOM) + MOVOL:400V , CAPPRM:CE + COOL:AIR + MOVOL:500V) + FREQ:50HZ , ((MOVOL:380V , MOVOL:460V) + CAPPRM:ASME , CAPPRM:MHLW + MOVOL:460V) + FREQ:60HZ) + CAPPRE:IEC , (COOL:AIR + MOVOL:575V , MOVOL:460V) + CAPPRE:ULCUL + CAPPRM:ASME + FREQ:60HZ) + IDRY:N + MODEL:GA110VP_16

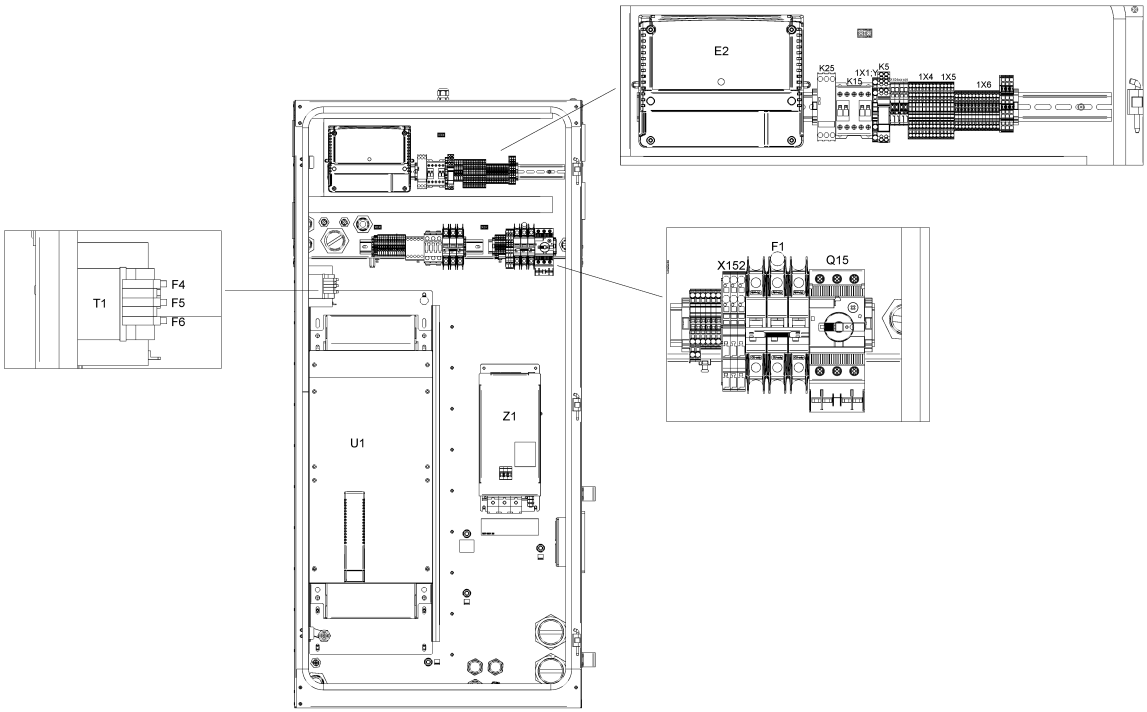

21.24 - Cubicle components GA 110 VSD+ - (200V-380V-460V/60Hz - IEC, 230V-460V-575V/60Hz - UL-cUL, 200V-400V-500V/50Hz - IEC) - Pack (12/12/2018 - 04/02/2020)

((((CAPPRM:AS1210 , CAPPRM:CE , CAPPRM:MHLW , CAPPRM:MOM) + MOVOL:400V , CAPPRM:CE + COOL:AIR + MOVOL:500V) + FREQ:50HZ , ((MOVOL:380V , MOVOL:460V) + CAPPRM:ASME , CAPPRM:MHLW + MOVOL:460V) + FREQ:60HZ) + CAPPRE:IEC , (COOL:AIR + MOVOL:575V , MOVOL:460V) + CAPPRE:ULCUL + CAPPRM:ASME + FREQ:60HZ) + IDRY:N + MODEL:GA110VP_16

Ref	Part Number	Qty	Name	Validity	EL
	1649 8001 46	1	MOTOR CABLE	**(12/12/2018 - 24/02/2019)** ((((CAPPRM:AS1210 , CAPPRM:CE , CAPPRM:MHLW , CAPPRM:MOM) + MOVOL:400V , CAPPRM:CE + COOL:AIR + MOVOL:500V) + FREQ:50HZ , ((MOVOL:380V , MOVOL:460V) + CAPPRM:ASME , CAPPRM:MHLW + MOVOL:460V) + FREQ:60HZ , CAPPRM:MHLW + COOL:AIR + MOVOL:200V) + CAPPRE:IEC , ((MOVOL:230V , MOVOL:575V) + COOL:AIR , MOVOL:460V) + CAPPRE:ULCUL + CAPPRM:ASME + FREQ:60HZ) **(25/02/2019 - 04/02/2020)** ((((CAPPRM:AS1210 , CAPPRM:CE , CAPPRM:MHLW , CAPPRM:MOM) + MOVOL:400V , CAPPRM:CE + MOVOL:500V , CAPPRM:MHLW + MOVOL:200V) + FREQ:50HZ , ((MOVOL:200V , MOVOL:460V) + CAPPRM:MHLW , (MOVOL:380V , MOVOL:460V) + CAPPRM:ASME) + FREQ:60HZ) + CAPPRE:IEC , (MOVOL:230V , MOVOL:460V , MOVOL:575V) + CAPPRE:ULCUL + CAPPRM:ASME + FREQ:60HZ) + COOL:AIR **(05/02/2020 - 30/12/2027)** (CAPPRE:IEC + CAPPRM:MHLW + MOVOL:200V , CAPPRE:ULCUL + CAPPRM:ASME + FREQ:60HZ + MOVOL:230V) + COOL:AIR	
	Electrical legend:	Motor conduit			
		1	DATALABEL	**(12/12/2018 - 24/02/2019)** ((((CAPPRM:AS1210 , CAPPRM:CE , CAPPRM:MHLW , CAPPRM:MOM) + MOVOL:400V , CAPPRM:CE + COOL:AIR + MOVOL:500V) + FREQ:50HZ , ((MOVOL:380V , MOVOL:460V) + CAPPRM:ASME , CAPPRM:MHLW + MOVOL:460V) + FREQ:60HZ , CAPPRM:MHLW + COOL:AIR + MOVOL:200V) + CAPPRE:IEC , ((MOVOL:230V , MOVOL:575V) + COOL:AIR , MOVOL:460V) + CAPPRE:ULCUL + CAPPRM:ASME + FREQ:60HZ) **(25/02/2019 - 04/02/2020)** ((((CAPPRM:AS1210 , CAPPRM:CE , CAPPRM:MHLW , CAPPRM:MOM) + MOVOL:400V , CAPPRM:CE + MOVOL:500V , CAPPRM:MHLW + MOVOL:200V) + FREQ:50HZ , ((MOVOL:200V , MOVOL:460V) + CAPPRM:MHLW , (MOVOL:380V , MOVOL:460V) + CAPPRM:ASME) + FREQ:60HZ) + CAPPRE:IEC , (MOVOL:230V , MOVOL:460V , MOVOL:575V) + CAPPRE:ULCUL + CAPPRM:ASME + FREQ:60HZ) + COOL:AIR **(05/02/2020 - 30/12/2027)** (CAPPRE:IEC + CAPPRM:MHLW + MOVOL:200V , CAPPRE:ULCUL + CAPPRM:ASME + FREQ:60HZ + MOVOL:230V) + COOL:AIR	Label

Legend:

CAPPRE:IEC - Component approval electrical:IEC
CAPPRE:ULCUL - Component approval electrical:UL/cUL
CAPPRM:AS1210 - Component approval mechanical:AS1210
CAPPRM:ASME - Component approval mechanical:ASME
CAPPRM:CE - Component approval mechanical:CE
CAPPRM:MHLW - Component approval mechanical:MHLW
CAPPRM:MOM - Component approval mechanical:MOM
COOL:AIR - Cooling:Air cooled
FREQ:50HZ - Frequency:50 Hz
FREQ:60HZ - Frequency:60 Hz
IDRY:N - Integrated dryer:No
MODEL:GA110VP_16 - Model:GA 110VSD+
MOVOL:200V - Supply voltage:200 V
MOVOL:230V - Supply voltage:230 V
MOVOL:380V - Supply voltage:380 V
MOVOL:400V - Supply voltage:400 V
MOVOL:460V - Supply voltage:460 V
MOVOL:500V - Supply voltage:500 V
MOVOL:575V - Supply voltage:575 V

21.24 - Cubicle components GA 110 VSD+ - (200V-380V-460V/60Hz - IEC, 230V-460V-575V/60Hz - UL-cUL, 200V-400V-500V/50Hz - IEC) - Pack (12/12/2018 - 04/02/2020)

((((CAPPRM:AS1210 , CAPPRM:CE , CAPPRM:MHLW , CAPPRM:MOM) + MOVOL:400V , CAPPRM:CE + COOL:AIR + MOVOL:500V) + FREQ:50HZ , ((MOVOL:380V , MOVOL:460V) + CAPPRM:ASME , CAPPRM:MHLW + MOVOL:460V) + FREQ:60HZ) + CAPPRE:IEC , (COOL:AIR + MOVOL:575V , MOVOL:460V) + CAPPRE:ULCUL + CAPPRM:ASME + FREQ:60HZ) + IDRY:N + MODEL:GA110VP_16

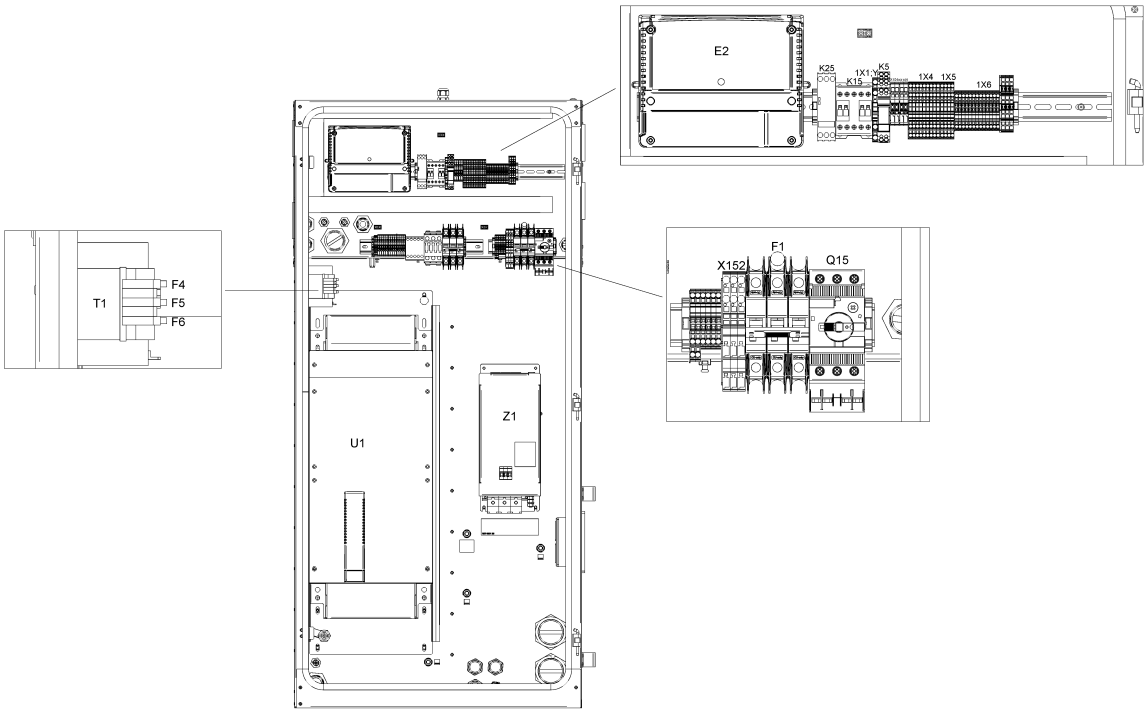

21.24 - Cubicle components GA 110 VSD+ - (200V-380V-460V/60Hz - IEC, 230V-460V-575V/60Hz - UL-cUL, 200V-400V-500V/50Hz - IEC) - Pack (12/12/2018 - 04/02/2020)

((((CAPPRM:AS1210 , CAPPRM:CE , CAPPRM:MHLW , CAPPRM:MOM) + MOVOL:400V , CAPPRM:CE + COOL:AIR + MOVOL:500V) + FREQ:50HZ , ((MOVOL:380V , MOVOL:460V) + CAPPRM:ASME , CAPPRM:MHLW + MOVOL:460V) + FREQ:60HZ) + CAPPRE:IEC , (COOL:AIR + MOVOL:575V , MOVOL:460V) + CAPPRE:ULCUL + CAPPRM:ASME + FREQ:60HZ) + IDRY:N + MODEL:GA110VP_16

Ref	Part Number	Qty	Name	Validity	EL
	1079 9901 68	1	WARNING LABEL	**(12/12/2018 - 24/02/2019)** ((((CAPPRM:AS1210 , CAPPRM:CE , CAPPRM:MHLW , CAPPRM:MOM) + MOVOL:400V , CAPPRM:CE + COOL:AIR + MOVOL:500V) + FREQ:50HZ , ((MOVOL:380V , MOVOL:460V) + CAPPRM:ASME , CAPPRM:MHLW + MOVOL:460V) + FREQ:60HZ , CAPPRM:MHLW + COOL:AIR + MOVOL:200V) + CAPPRE:IEC , ((MOVOL:230V , MOVOL:575V) + COOL:AIR , MOVOL:460V) + CAPPRE:ULCUL + CAPPRM:ASME + FREQ:60HZ) **(25/02/2019 - 04/02/2020)** ((((CAPPRM:AS1210 , CAPPRM:CE , CAPPRM:MHLW , CAPPRM:MOM) + MOVOL:400V , CAPPRM:CE + MOVOL:500V , CAPPRM:MHLW + MOVOL:200V) + FREQ:50HZ , ((MOVOL:200V , MOVOL:460V) + CAPPRM:MHLW , (MOVOL:380V , MOVOL:460V) + CAPPRM:ASME) + FREQ:60HZ) + CAPPRE:IEC , (MOVOL:230V , MOVOL:460V , MOVOL:575V) + CAPPRE:ULCUL + CAPPRM:ASME + FREQ:60HZ) + COOL:AIR **(05/02/2020 - 30/12/2027)** (CAPPRE:IEC + CAPPRM:MHLW + MOVOL:200V , CAPPRE:ULCUL + CAPPRM:ASME + FREQ:60HZ + MOVOL:230V) + COOL:AIR	Label
	1649 8005 00	-	LABEL	**(12/12/2018 - 24/02/2019)** ((((CAPPRM:AS1210 , CAPPRM:CE , CAPPRM:MHLW , CAPPRM:MOM) + MOVOL:400V , CAPPRM:CE + COOL:AIR + MOVOL:500V) + FREQ:50HZ , ((MOVOL:380V , MOVOL:460V) + CAPPRM:ASME , CAPPRM:MHLW + MOVOL:460V) + FREQ:60HZ , CAPPRM:MHLW + COOL:AIR + MOVOL:200V) + CAPPRE:IEC , ((MOVOL:230V , MOVOL:575V) + COOL:AIR , MOVOL:460V) + CAPPRE:ULCUL + CAPPRM:ASME + FREQ:60HZ) **(25/02/2019 - 04/02/2020)** ((((CAPPRM:AS1210 , CAPPRM:CE , CAPPRM:MHLW , CAPPRM:MOM) + MOVOL:400V , CAPPRM:CE + MOVOL:500V , CAPPRM:MHLW + MOVOL:200V) + FREQ:50HZ , ((MOVOL:200V , MOVOL:460V) + CAPPRM:MHLW , (MOVOL:380V , MOVOL:460V) + CAPPRM:ASME) + FREQ:60HZ) + CAPPRE:IEC , (MOVOL:230V , MOVOL:460V , MOVOL:575V) + CAPPRE:ULCUL + CAPPRM:ASME + FREQ:60HZ) + COOL:AIR **(05/02/2020 - 30/12/2027)** (CAPPRE:IEC + CAPPRM:MHLW + MOVOL:200V , CAPPRE:ULCUL + CAPPRM:ASME + FREQ:60HZ + MOVOL:230V) + COOL:AIR	Label

Legend:

CAPPRE:IEC - Component approval electrical:IEC
CAPPRE:ULCUL - Component approval electrical:UL/cUL
CAPPRM:AS1210 - Component approval mechanical:AS1210
CAPPRM:ASME - Component approval mechanical:ASME
CAPPRM:CE - Component approval mechanical:CE
CAPPRM:MHLW - Component approval mechanical:MHLW
CAPPRM:MOM - Component approval mechanical:MOM
COOL:AIR - Cooling:Air cooled
FREQ:50HZ - Frequency:50 Hz
FREQ:60HZ - Frequency:60 Hz
IDRY:N - Integrated dryer:No
MODEL:GA110VP_16 - Model:GA 110VSD+
MOVOL:200V - Supply voltage:200 V
MOVOL:230V - Supply voltage:230 V
MOVOL:380V - Supply voltage:380 V
MOVOL:400V - Supply voltage:400 V
MOVOL:460V - Supply voltage:460 V
MOVOL:500V - Supply voltage:500 V
MOVOL:575V - Supply voltage:575 V

21.24 - Cubicle components GA 110 VSD+ - (200V-380V-460V/60Hz - IEC, 230V-460V-575V/60Hz - UL-cUL, 200V-400V-500V/50Hz - IEC) - Pack (12/12/2018 - 04/02/2020)

((((CAPPRM:AS1210 , CAPPRM:CE , CAPPRM:MHLW , CAPPRM:MOM) + MOVOL:400V , CAPPRM:CE + COOL:AIR + MOVOL:500V) + FREQ:50HZ , ((MOVOL:380V , MOVOL:460V) + CAPPRM:ASME , CAPPRM:MHLW + MOVOL:460V) + FREQ:60HZ) + CAPPRE:IEC , (COOL:AIR + MOVOL:575V , MOVOL:460V) + CAPPRE:ULCUL + CAPPRM:ASME + FREQ:60HZ) + IDRY:N + MODEL:GA110VP_16

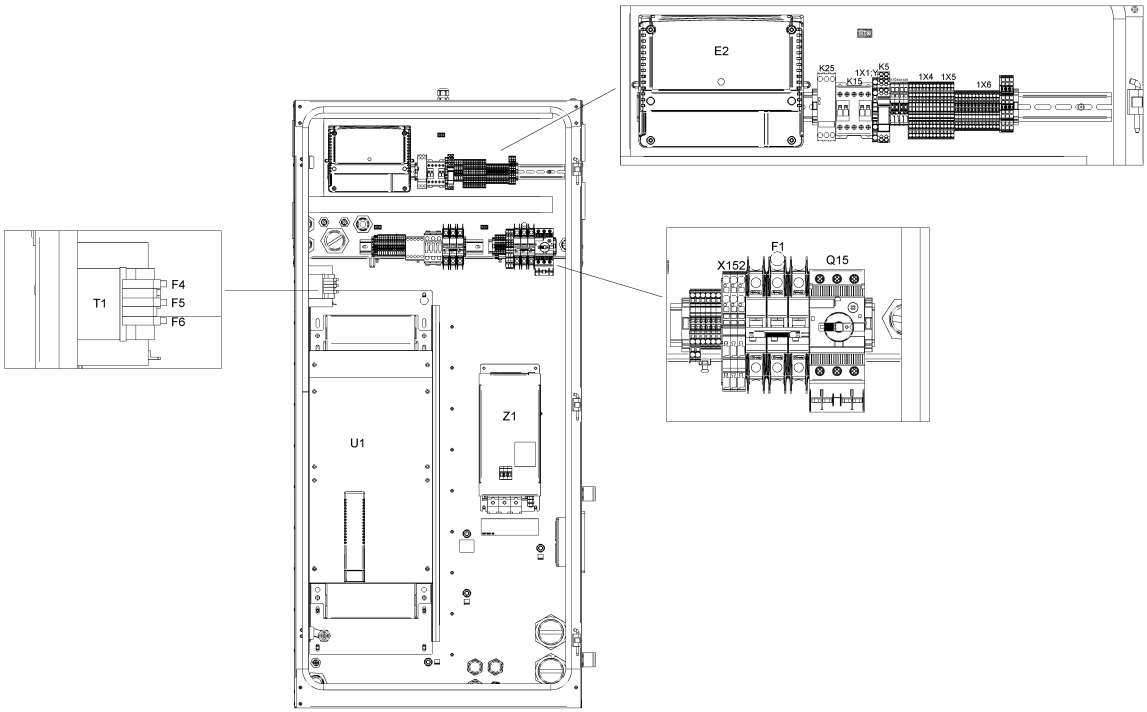

21.24 - Cubicle components GA 110 VSD+ - (200V-380V-460V/60Hz - IEC, 230V-460V-575V/60Hz - UL-cUL, 200V-400V-500V/50Hz - IEC) - Pack (12/12/2018 - 04/02/2020)

((((CAPPRM:AS1210 , CAPPRM:CE , CAPPRM:MHLW , CAPPRM:MOM) + MOVOL:400V , CAPPRM:CE + COOL:AIR + MOVOL:500V) + FREQ:50HZ , ((MOVOL:380V , MOVOL:460V) + CAPPRM:ASME , CAPPRM:MHLW + MOVOL:460V) + FREQ:60HZ) + CAPPRE:IEC , (COOL:AIR + MOVOL:575V , MOVOL:460V) + CAPPRE:ULCUL + CAPPRM:ASME + FREQ:60HZ) + IDRY:N + MODEL:GA110VP_16

Ref	Part Number	Qty	Name	Validity	EL
	1900 5350 18	1	INVERTER	**(12/12/2018 - 24/02/2019)** ((((CAPPRM:AS1210 , CAPPRM:CE , CAPPRM:MHLW , CAPPRM:MOM) + MOVOL:400V , CAPPRM:CE + COOL:AIR + MOVOL:500V) + FREQ:50HZ , ((MOVOL:380V , MOVOL:460V) + CAPPRM:ASME , CAPPRM:MHLW + MOVOL:460V) + FREQ:60HZ , CAPPRM:MHLW + COOL:AIR + MOVOL:200V) + CAPPRE:IEC , ((MOVOL:230V , MOVOL:575V) + COOL:AIR , MOVOL:460V) + CAPPRE:ULCUL + CAPPRM:ASME + FREQ:60HZ) **(25/02/2019 - 04/02/2020)** ((((CAPPRM:AS1210 , CAPPRM:CE , CAPPRM:MHLW , CAPPRM:MOM) + MOVOL:400V , CAPPRM:CE + MOVOL:500V , CAPPRM:MHLW + MOVOL:200V) + FREQ:50HZ , ((MOVOL:200V , MOVOL:460V) + CAPPRM:MHLW , (MOVOL:380V , MOVOL:460V) + CAPPRM:ASME) + FREQ:60HZ) + CAPPRE:IEC , (MOVOL:230V , MOVOL:460V , MOVOL:575V) + CAPPRE:ULCUL + CAPPRM:ASME + FREQ:60HZ) + COOL:AIR **(05/02/2020 - 30/12/2027)** (CAPPRE:IEC + CAPPRM:MHLW + MOVOL:200V , CAPPRE:ULCUL + CAPPRM:ASME + FREQ:60HZ + MOVOL:230V) + COOL:AIR	U1
	1631 2079 00	1	NANOPERMRING	**(12/12/2018 - 24/02/2019)** ((((CAPPRM:AS1210 , CAPPRM:CE , CAPPRM:MHLW , CAPPRM:MOM) + MOVOL:400V , CAPPRM:CE + COOL:AIR + MOVOL:500V) + FREQ:50HZ , ((MOVOL:380V , MOVOL:460V) + CAPPRM:ASME , CAPPRM:MHLW + MOVOL:460V) + FREQ:60HZ , CAPPRM:MHLW + COOL:AIR + MOVOL:200V) + CAPPRE:IEC , ((MOVOL:230V , MOVOL:575V) + COOL:AIR , MOVOL:460V) + CAPPRE:ULCUL + CAPPRM:ASME + FREQ:60HZ) **(25/02/2019 - 04/02/2020)** ((((CAPPRM:AS1210 , CAPPRM:CE , CAPPRM:MHLW , CAPPRM:MOM) + MOVOL:400V , CAPPRM:CE + MOVOL:500V , CAPPRM:MHLW + MOVOL:200V) + FREQ:50HZ , ((MOVOL:200V , MOVOL:460V) + CAPPRM:MHLW , (MOVOL:380V , MOVOL:460V) + CAPPRM:ASME) + FREQ:60HZ) + CAPPRE:IEC , (MOVOL:230V , MOVOL:460V , MOVOL:575V) + CAPPRE:ULCUL + CAPPRM:ASME + FREQ:60HZ) + COOL:AIR **(05/02/2020 - 30/12/2027)** (CAPPRE:IEC + CAPPRM:MHLW + MOVOL:200V , CAPPRE:ULCUL + CAPPRM:ASME + FREQ:60HZ + MOVOL:230V) + COOL:AIR	
	Electrical legend:	Nanoperm ring			

Legend:

CAPPRE:IEC - Component approval electrical:IEC
CAPPRE:ULCUL - Component approval electrical:UL/cUL
CAPPRM:AS1210 - Component approval mechanical:AS1210
CAPPRM:ASME - Component approval mechanical:ASME
CAPPRM:CE - Component approval mechanical:CE
CAPPRM:MHLW - Component approval mechanical:MHLW
CAPPRM:MOM - Component approval mechanical:MOM
COOL:AIR - Cooling:Air cooled
FREQ:50HZ - Frequency:50 Hz
FREQ:60HZ - Frequency:60 Hz
IDRY:N - Integrated dryer:No
MODEL:GA110VP_16 - Model:GA 110VSD+
MOVOL:200V - Supply voltage:200 V
MOVOL:230V - Supply voltage:230 V
MOVOL:380V - Supply voltage:380 V
MOVOL:400V - Supply voltage:400 V
MOVOL:460V - Supply voltage:460 V
MOVOL:500V - Supply voltage:500 V
MOVOL:575V - Supply voltage:575 V

21.24 - Cubicle components GA 110 VSD+ - (200V-380V-460V/60Hz - IEC, 230V-460V-575V/60Hz - UL-cUL, 200V-400V-500V/50Hz - IEC) - Pack (12/12/2018 - 04/02/2020)

((((CAPPRM:AS1210 , CAPPRM:CE , CAPPRM:MHLW , CAPPRM:MOM) + MOVOL:400V , CAPPRM:CE + COOL:AIR + MOVOL:500V) + FREQ:50HZ , ((MOVOL:380V , MOVOL:460V) + CAPPRM:ASME , CAPPRM:MHLW + MOVOL:460V) + FREQ:60HZ) + CAPPRE:IEC , (COOL:AIR + MOVOL:575V , MOVOL:460V) + CAPPRE:ULCUL + CAPPRM:ASME + FREQ:60HZ) + IDRY:N + MODEL:GA110VP_16

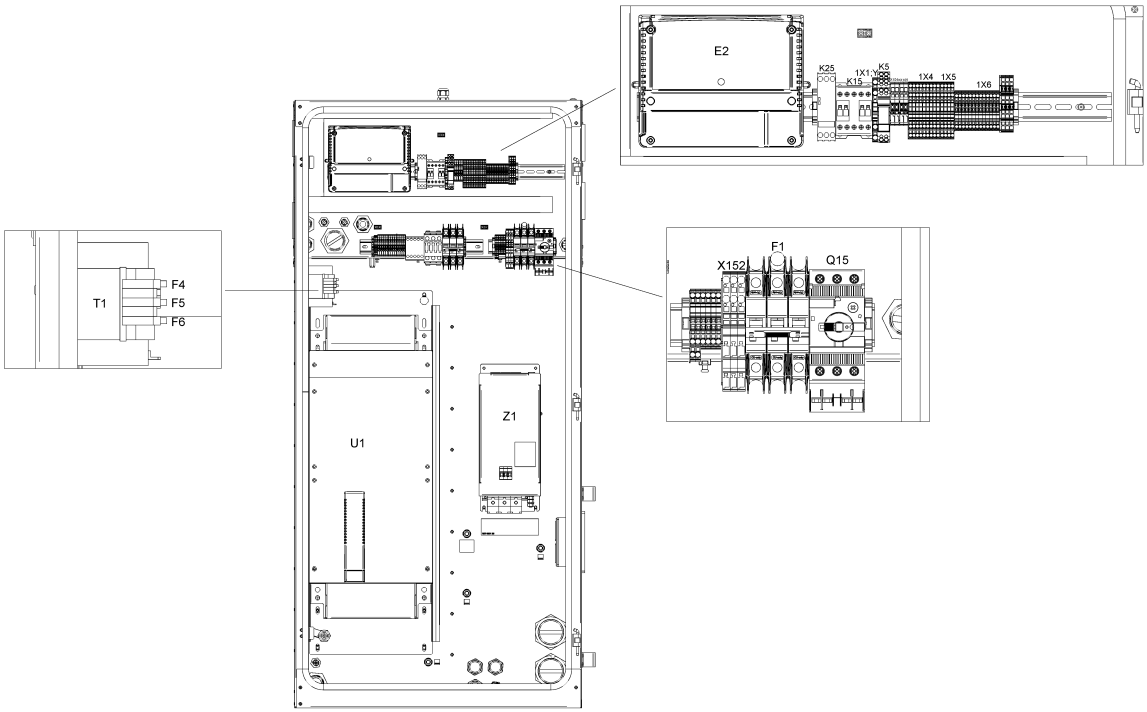

Ref	Part Number	Qty	Name	Validity	EL
	0697 9811 17	2	PLUG	**(12/12/2018 - 24/02/2019)** ((((CAPPRM:AS1210 , CAPPRM:CE , CAPPRM:MHLW , CAPPRM:MOM) + MOVOL:400V , CAPPRM:CE + COOL:AIR + MOVOL:500V) + FREQ:50HZ , ((MOVOL:380V , MOVOL:460V) + CAPPRM:ASME , CAPPRM:MHLW + MOVOL:460V) + FREQ:60HZ , CAPPRM:MHLW + COOL:AIR + MOVOL:200V) + CAPPRE:IEC , ((MOVOL:230V , MOVOL:575V) + COOL:AIR , MOVOL:460V) + CAPPRE:ULCUL + CAPPRM:ASME + FREQ:60HZ) **(25/02/2019 - 04/02/2020)** ((((CAPPRM:AS1210 , CAPPRM:CE , CAPPRM:MHLW , CAPPRM:MOM) + MOVOL:400V , CAPPRM:CE + MOVOL:500V , CAPPRM:MHLW + MOVOL:200V) + FREQ:50HZ , ((MOVOL:200V , MOVOL:460V) + CAPPRM:MHLW , (MOVOL:380V , MOVOL:460V) + CAPPRM:ASME) + FREQ:60HZ) + CAPPRE:IEC , (MOVOL:230V , MOVOL:460V , MOVOL:575V) + CAPPRE:ULCUL + CAPPRM:ASME + FREQ:60HZ) + COOL:AIR **(05/02/2020 - 30/12/2027)** (CAPPRE:IEC + CAPPRM:MHLW + MOVOL:200V , CAPPRE:ULCUL + CAPPRM:ASME + FREQ:60HZ + MOVOL:230V) + COOL:AIR	
	Electrical legend:	Plug for transfo supply			
	0989 3700 48	2	NUT	**(12/12/2018 - 24/02/2019)** ((((CAPPRM:AS1210 , CAPPRM:CE , CAPPRM:MHLW , CAPPRM:MOM) + MOVOL:400V , CAPPRM:CE + COOL:AIR + MOVOL:500V) + FREQ:50HZ , ((MOVOL:380V , MOVOL:460V) + CAPPRM:ASME , CAPPRM:MHLW + MOVOL:460V) + FREQ:60HZ , CAPPRM:MHLW + COOL:AIR + MOVOL:200V) + CAPPRE:IEC , ((MOVOL:230V , MOVOL:575V) + COOL:AIR , MOVOL:460V) + CAPPRE:ULCUL + CAPPRM:ASME + FREQ:60HZ) **(25/02/2019 - 04/02/2020)** ((((CAPPRM:AS1210 , CAPPRM:CE , CAPPRM:MHLW , CAPPRM:MOM) + MOVOL:400V , CAPPRM:CE + MOVOL:500V , CAPPRM:MHLW + MOVOL:200V) + FREQ:50HZ , ((MOVOL:200V , MOVOL:460V) + CAPPRM:MHLW , (MOVOL:380V , MOVOL:460V) + CAPPRM:ASME) + FREQ:60HZ) + CAPPRE:IEC , (MOVOL:230V , MOVOL:460V , MOVOL:575V) + CAPPRE:ULCUL + CAPPRM:ASME + FREQ:60HZ) + COOL:AIR **(05/02/2020 - 30/12/2027)** (CAPPRE:IEC + CAPPRM:MHLW + MOVOL:200V , CAPPRE:ULCUL + CAPPRM:ASME + FREQ:60HZ + MOVOL:230V) + COOL:AIR	
	Electrical legend:	Nut for transfo supply			

Legend:

CAPPRE:IEC - Component approval electrical:IEC
CAPPRM:ASME - Component approval mechanical:ASME
CAPPRM:MOM - Component approval mechanical:MOM
FREQ:60HZ - Frequency:60 Hz
MOVOL:200V - Supply voltage:200 V
MOVOL:400V - Supply voltage:400 V
MOVOL:575V - Supply voltage:575 V
CAPPRE:ULCUL - Component approval electrical:UL/cUL
CAPPRM:CE - Component approval mechanical:CE
COOL:AIR - Cooling:Air cooled
IDRY:N - Integrated dryer:No
MOVOL:230V - Supply voltage:230 V
MOVOL:460V - Supply voltage:460 V
CAPPRM:AS1210 - Component approval mechanical:AS1210
CAPPRM:MHLW - Component approval mechanical:MHLW
FREQ:50HZ - Frequency:50 Hz
MODEL:GA110VP_16 - Model:GA 110VSD+
MOVOL:380V - Supply voltage:380 V
MOVOL:500V - Supply voltage:500 V

21.24 - Cubicle components GA 110 VSD+ - (200V-380V-460V/60Hz - IEC, 230V-460V-575V/60Hz - UL-cUL, 200V-400V-500V/50Hz - IEC) - Pack (12/12/2018 - 04/02/2020)

((((CAPPRM:AS1210 , CAPPRM:CE , CAPPRM:MHLW , CAPPRM:MOM) + MOVOL:400V , CAPPRM:CE + COOL:AIR + MOVOL:500V) + FREQ:50HZ , ((MOVOL:380V , MOVOL:460V) + CAPPRM:ASME , CAPPRM:MHLW + MOVOL:460V) + FREQ:60HZ) + CAPPRE:IEC , (COOL:AIR + MOVOL:575V , MOVOL:460V) + CAPPRE:ULCUL + CAPPRM:ASME + FREQ:60HZ) + IDRY:N + MODEL:GA110VP_16

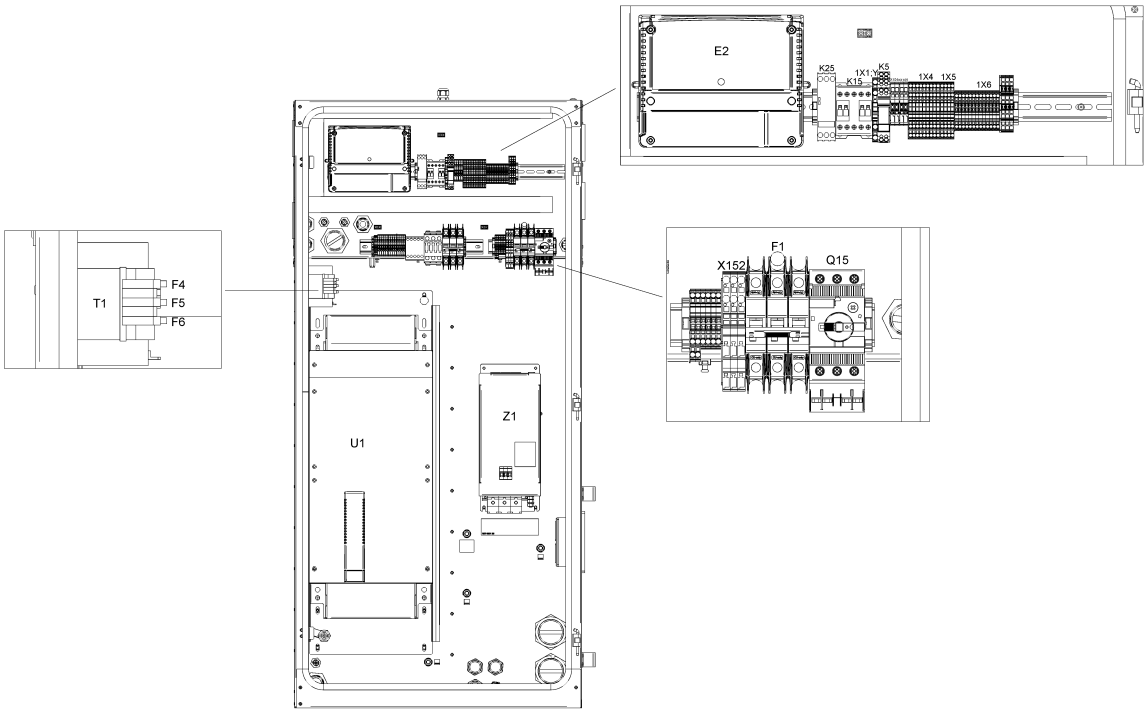

21.24 - Cubicle components GA 110 VSD+ - (200V-380V-460V/60Hz - IEC, 230V-460V-575V/60Hz - UL-cUL, 200V-400V-500V/50Hz - IEC) - Pack (12/12/2018 - 04/02/2020)

((((CAPPRM:AS1210 , CAPPRM:CE , CAPPRM:MHLW , CAPPRM:MOM) + MOVOL:400V , CAPPRM:CE + COOL:AIR + MOVOL:500V) + FREQ:50HZ , ((MOVOL:380V , MOVOL:460V) + CAPPRM:ASME , CAPPRM:MHLW + MOVOL:460V) + FREQ:60HZ) + CAPPRE:IEC , (COOL:AIR + MOVOL:575V , MOVOL:460V) + CAPPRE:ULCUL + CAPPRM:ASME + FREQ:60HZ) + IDRY:N + MODEL:GA110VP_16

Ref	Part Number	Qty	Name	Validity	EL
	0698 5140 72	1	CABLE GLAND	**(12/12/2018 - 24/02/2019)** ((((CAPPRM:AS1210 , CAPPRM:CE , CAPPRM:MHLW , CAPPRM:MOM) + MOVOL:400V , CAPPRM:CE + COOL:AIR + MOVOL:500V) + FREQ:50HZ , ((MOVOL:380V , MOVOL:460V) + CAPPRM:ASME , CAPPRM:MHLW + MOVOL:460V) + FREQ:60HZ , CAPPRM:MHLW + COOL:AIR + MOVOL:200V) + CAPPRE:IEC , ((MOVOL:230V , MOVOL:575V) + COOL:AIR , MOVOL:460V) + CAPPRE:ULCUL + CAPPRM:ASME + FREQ:60HZ) **(25/02/2019 - 04/02/2020)** ((((CAPPRM:AS1210 , CAPPRM:CE , CAPPRM:MHLW , CAPPRM:MOM) + MOVOL:400V , CAPPRM:CE + MOVOL:500V , CAPPRM:MHLW + MOVOL:200V) + FREQ:50HZ , ((MOVOL:200V , MOVOL:460V) + CAPPRM:MHLW , (MOVOL:380V , MOVOL:460V) + CAPPRM:ASME) + FREQ:60HZ) + CAPPRE:IEC , (MOVOL:230V , MOVOL:460V , MOVOL:575V) + CAPPRE:ULCUL + CAPPRM:ASME + FREQ:60HZ) + COOL:AIR **(05/02/2020 - 30/12/2027)** (CAPPRE:IEC + CAPPRM:MHLW + MOVOL:200V , CAPPRE:ULCUL + CAPPRM:ASME + FREQ:60HZ + MOVOL:230V) + COOL:AIR	Fan
	0698 5140 71	1	CABLE GLAND	**(12/12/2018 - 24/02/2019)** ((((CAPPRM:AS1210 , CAPPRM:CE , CAPPRM:MHLW , CAPPRM:MOM) + MOVOL:400V , CAPPRM:CE + COOL:AIR + MOVOL:500V) + FREQ:50HZ , ((MOVOL:380V , MOVOL:460V) + CAPPRM:ASME , CAPPRM:MHLW + MOVOL:460V) + FREQ:60HZ , CAPPRM:MHLW + COOL:AIR + MOVOL:200V) + CAPPRE:IEC , ((MOVOL:230V , MOVOL:575V) + COOL:AIR , MOVOL:460V) + CAPPRE:ULCUL + CAPPRM:ASME + FREQ:60HZ) **(25/02/2019 - 04/02/2020)** ((((CAPPRM:AS1210 , CAPPRM:CE , CAPPRM:MHLW , CAPPRM:MOM) + MOVOL:400V , CAPPRM:CE + MOVOL:500V , CAPPRM:MHLW + MOVOL:200V) + FREQ:50HZ , ((MOVOL:200V , MOVOL:460V) + CAPPRM:MHLW , (MOVOL:380V , MOVOL:460V) + CAPPRM:ASME) + FREQ:60HZ) + CAPPRE:IEC , (MOVOL:230V , MOVOL:460V , MOVOL:575V) + CAPPRE:ULCUL + CAPPRM:ASME + FREQ:60HZ) + COOL:AIR **(05/02/2020 - 30/12/2027)** (CAPPRE:IEC + CAPPRM:MHLW + MOVOL:200V , CAPPRE:ULCUL + CAPPRM:ASME + FREQ:60HZ + MOVOL:230V) + COOL:AIR	

Electrical legend: Ambient sensor

Legend:

CAPPRE:IEC - Component approval electrical:IEC
CAPPRM:ASME - Component approval mechanical:ASME
CAPPRM:MOM - Component approval mechanical:MOM
FREQ:60HZ - Frequency:60 Hz
MOVOL:200V - Supply voltage:200 V
MOVOL:400V - Supply voltage:400 V
MOVOL:575V - Supply voltage:575 V
CAPPRE:ULCUL - Component approval electrical:UL/cUL
CAPPRM:CE - Component approval mechanical:CE
COOL:AIR - Cooling:Air cooled
IDRY:N - Integrated dryer:No
MOVOL:230V - Supply voltage:230 V
MOVOL:460V - Supply voltage:460 V
CAPPRM:AS1210 - Component approval mechanical:AS1210
CAPPRM:MHLW - Component approval mechanical:MHLW
FREQ:50HZ - Frequency:50 Hz
MODEL:GA110VP_16 - Model:GA 110VSD+
MOVOL:380V - Supply voltage:380 V
MOVOL:500V - Supply voltage:500 V

21.24 - Cubicle components GA 110 VSD+ - (200V-380V-460V/60Hz - IEC, 230V-460V-575V/60Hz - UL-cUL, 200V-400V-500V/50Hz - IEC) - Pack (12/12/2018 - 04/02/2020)

((((CAPPRM:AS1210 , CAPPRM:CE , CAPPRM:MHLW , CAPPRM:MOM) + MOVOL:400V , CAPPRM:CE + COOL:AIR + MOVOL:500V) + FREQ:50HZ , ((MOVOL:380V , MOVOL:460V) + CAPPRM:ASME , CAPPRM:MHLW + MOVOL:460V) + FREQ:60HZ) + CAPPRE:IEC , (COOL:AIR + MOVOL:575V , MOVOL:460V) + CAPPRE:ULCUL + CAPPRM:ASME + FREQ:60HZ) + IDRY:N + MODEL:GA110VP_16

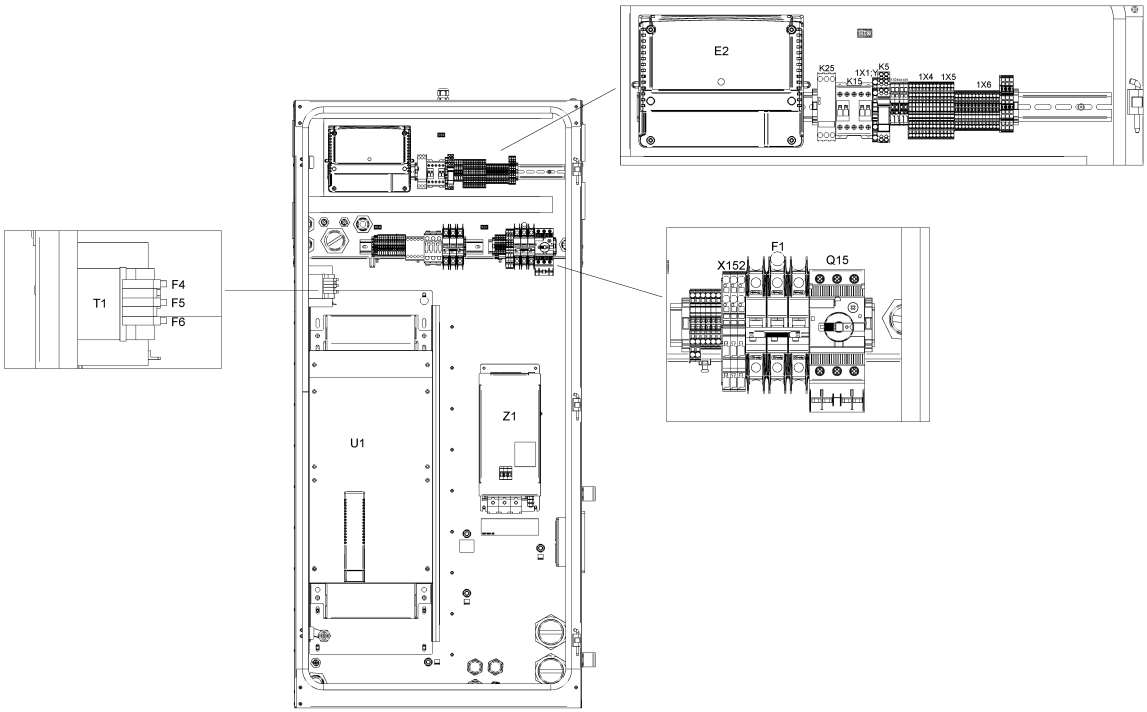

21.24 - Cubicle components GA 110 VSD+ - (200V-380V-460V/60Hz - IEC, 230V-460V-575V/60Hz - UL-cUL, 200V-400V-500V/50Hz - IEC) - Pack (12/12/2018 - 04/02/2020)

((((CAPPRM:AS1210 , CAPPRM:CE , CAPPRM:MHLW , CAPPRM:MOM) + MOVOL:400V , CAPPRM:CE + COOL:AIR + MOVOL:500V) + FREQ:50HZ , ((MOVOL:380V , MOVOL:460V) + CAPPRM:ASME , CAPPRM:MHLW + MOVOL:460V) + FREQ:60HZ) + CAPPRE:IEC , (COOL:AIR + MOVOL:575V , MOVOL:460V) + CAPPRE:ULCUL + CAPPRM:ASME + FREQ:60HZ) + IDRY:N + MODEL:GA110VP_16

Ref	Part Number	Qty	Name	Validity	EL
	0697 9809 20	1	LOCKNUT	**(12/12/2018 - 24/02/2019)** ((((CAPPRM:AS1210 , CAPPRM:CE , CAPPRM:MHLW , CAPPRM:MOM) + MOVOL:400V , CAPPRM:CE + COOL:AIR + MOVOL:500V) + FREQ:50HZ , ((MOVOL:380V , MOVOL:460V) + CAPPRM:ASME , CAPPRM:MHLW + MOVOL:460V) + FREQ:60HZ , CAPPRM:MHLW + COOL:AIR + MOVOL:200V) + CAPPRE:IEC , ((MOVOL:230V , MOVOL:575V) + COOL:AIR , MOVOL:460V) + CAPPRE:ULCUL + CAPPRM:ASME + FREQ:60HZ) **(25/02/2019 - 04/02/2020)** ((((CAPPRM:AS1210 , CAPPRM:CE , CAPPRM:MHLW , CAPPRM:MOM) + MOVOL:400V , CAPPRM:CE + MOVOL:500V , CAPPRM:MHLW + MOVOL:200V) + FREQ:50HZ , ((MOVOL:200V , MOVOL:460V) + CAPPRM:MHLW , (MOVOL:380V , MOVOL:460V) + CAPPRM:ASME) + FREQ:60HZ) + CAPPRE:IEC , (MOVOL:230V , MOVOL:460V , MOVOL:575V) + CAPPRE:ULCUL + CAPPRM:ASME + FREQ:60HZ) + COOL:AIR **(05/02/2020 - 30/12/2027)** (CAPPRE:IEC + CAPPRM:MHLW + MOVOL:200V , CAPPRE:ULCUL + CAPPRM:ASME + FREQ:60HZ + MOVOL:230V) + COOL:AIR	
	Electrical legend:	Ambient sensor			
	1089 9556 44	1	FAN WITH FILTER	**(12/12/2018 - 24/02/2019)** ((((CAPPRM:AS1210 , CAPPRM:CE , CAPPRM:MHLW , CAPPRM:MOM) + MOVOL:400V , CAPPRM:CE + COOL:AIR + MOVOL:500V) + FREQ:50HZ , ((MOVOL:380V , MOVOL:460V) + CAPPRM:ASME , CAPPRM:MHLW + MOVOL:460V) + FREQ:60HZ , CAPPRM:MHLW + COOL:AIR + MOVOL:200V) + CAPPRE:IEC , ((MOVOL:230V , MOVOL:575V) + COOL:AIR , MOVOL:460V) + CAPPRE:ULCUL + CAPPRM:ASME + FREQ:60HZ) **(25/02/2019 - 04/02/2020)** ((((CAPPRM:AS1210 , CAPPRM:CE , CAPPRM:MHLW , CAPPRM:MOM) + MOVOL:400V , CAPPRM:CE + MOVOL:500V , CAPPRM:MHLW + MOVOL:200V) + FREQ:50HZ , ((MOVOL:200V , MOVOL:460V) + CAPPRM:MHLW , (MOVOL:380V , MOVOL:460V) + CAPPRM:ASME) + FREQ:60HZ) + CAPPRE:IEC , (MOVOL:230V , MOVOL:460V , MOVOL:575V) + CAPPRE:ULCUL + CAPPRM:ASME + FREQ:60HZ) + COOL:AIR **(05/02/2020 - 30/12/2027)** (CAPPRE:IEC + CAPPRM:MHLW + MOVOL:200V , CAPPRE:ULCUL + CAPPRM:ASME + FREQ:60HZ + MOVOL:230V) + COOL:AIR	Cubicle fan

Legend:

CAPPRE:IEC - Component approval electrical:IEC
CAPPRE:ULCUL - Component approval electrical:UL/cUL
CAPPRM:AS1210 - Component approval mechanical:AS1210
CAPPRM:ASME - Component approval mechanical:ASME
CAPPRM:CE - Component approval mechanical:CE
CAPPRM:MHLW - Component approval mechanical:MHLW
CAPPRM:MOM - Component approval mechanical:MOM
COOL:AIR - Cooling:Air cooled
FREQ:50HZ - Frequency:50 Hz
FREQ:60HZ - Frequency:60 Hz
IDRY:N - Integrated dryer:No
MODEL:GA110VP_16 - Model:GA 110VSD+
MOVOL:200V - Supply voltage:200 V
MOVOL:230V - Supply voltage:230 V
MOVOL:380V - Supply voltage:380 V
MOVOL:400V - Supply voltage:400 V
MOVOL:460V - Supply voltage:460 V
MOVOL:500V - Supply voltage:500 V
MOVOL:575V - Supply voltage:575 V

21.24 - Cubicle components GA 110 VSD+ - (200V-380V-460V/60Hz - IEC, 230V-460V-575V/60Hz - UL-cUL, 200V-400V-500V/50Hz - IEC) - Pack (12/12/2018 - 04/02/2020)

((((CAPPRM:AS1210 , CAPPRM:CE , CAPPRM:MHLW , CAPPRM:MOM) + MOVOL:400V , CAPPRM:CE + COOL:AIR + MOVOL:500V) + FREQ:50HZ , ((MOVOL:380V , MOVOL:460V) + CAPPRM:ASME , CAPPRM:MHLW + MOVOL:460V) + FREQ:60HZ) + CAPPRE:IEC , (COOL:AIR + MOVOL:575V , MOVOL:460V) + CAPPRE:ULCUL + CAPPRM:ASME + FREQ:60HZ) + IDRY:N + MODEL:GA110VP_16

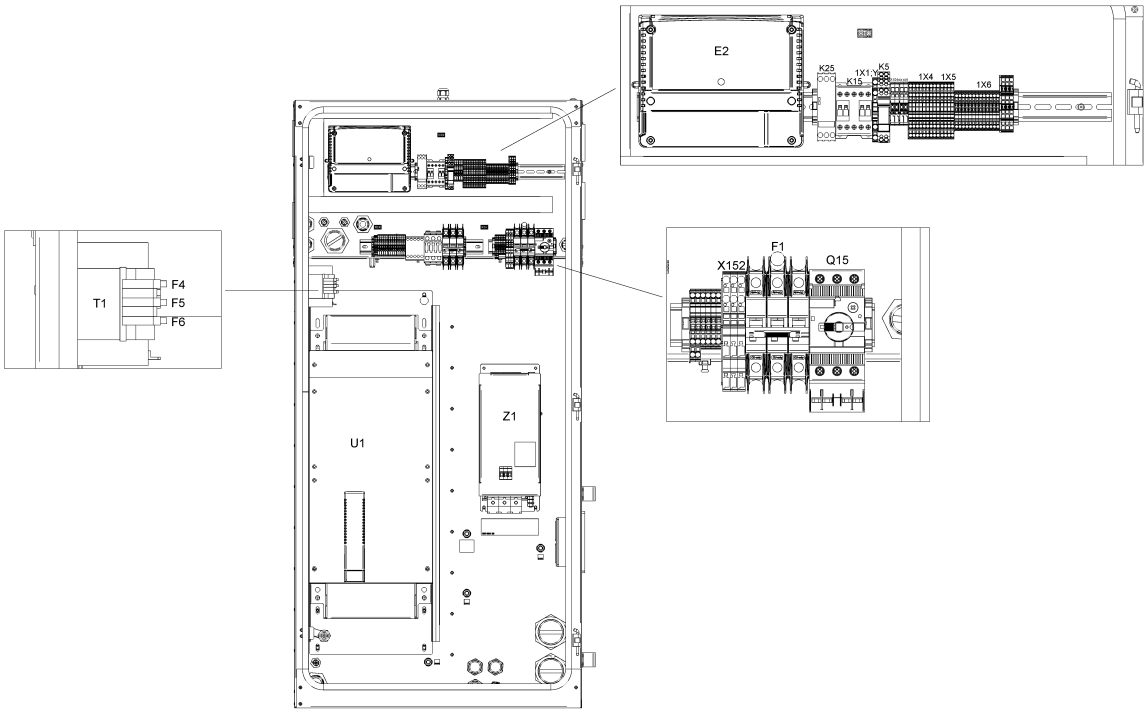

21.24 - Cubicle components GA 110 VSD+ - (200V-380V-460V/60Hz - IEC, 230V-460V-575V/60Hz - UL-cUL, 200V-400V-500V/50Hz - IEC) - Pack (12/12/2018 - 04/02/2020)

((((CAPPRM:AS1210 , CAPPRM:CE , CAPPRM:MHLW , CAPPRM:MOM) + MOVOL:400V , CAPPRM:CE + COOL:AIR + MOVOL:500V) + FREQ:50HZ , ((MOVOL:380V , MOVOL:460V) + CAPPRM:ASME , CAPPRM:MHLW + MOVOL:460V) + FREQ:60HZ) + CAPPRE:IEC , (COOL:AIR + MOVOL:575V , MOVOL:460V) + CAPPRE:ULCUL + CAPPRM:ASME + FREQ:60HZ) + IDRY:N + MODEL:GA110VP_16

Ref	Part Number	Qty	Name	Validity	EL
	1089 9556 72	4	AIR INLET WITHOUT FILTER	**(12/12/2018 - 24/02/2019)** ((((CAPPRM:AS1210 , CAPPRM:CE , CAPPRM:MHLW , CAPPRM:MOM) + MOVOL:400V , CAPPRM:CE + COOL:AIR + MOVOL:500V) + FREQ:50HZ , ((MOVOL:380V , MOVOL:460V) + CAPPRM:ASME , CAPPRM:MHLW + MOVOL:460V) + FREQ:60HZ , CAPPRM:MHLW + COOL:AIR + MOVOL:200V) + CAPPRE:IEC , ((MOVOL:230V , MOVOL:575V) + COOL:AIR , MOVOL:460V) + CAPPRE:ULCUL + CAPPRM:ASME + FREQ:60HZ) **(25/02/2019 - 04/02/2020)** ((((CAPPRM:AS1210 , CAPPRM:CE , CAPPRM:MHLW , CAPPRM:MOM) + MOVOL:400V , CAPPRM:CE + MOVOL:500V , CAPPRM:MHLW + MOVOL:200V) + FREQ:50HZ , ((MOVOL:200V , MOVOL:460V) + CAPPRM:MHLW , (MOVOL:380V , MOVOL:460V) + CAPPRM:ASME) + FREQ:60HZ) + CAPPRE:IEC , (MOVOL:230V , MOVOL:460V , MOVOL:575V) + CAPPRE:ULCUL + CAPPRM:ASME + FREQ:60HZ) + COOL:AIR **(05/02/2020 - 30/12/2027)** (CAPPRE:IEC + CAPPRM:MHLW + MOVOL:200V , CAPPRE:ULCUL + CAPPRM:ASME + FREQ:60HZ + MOVOL:230V) + COOL:AIR	Filter grid
	1088 0032 09	1	CONNECTOR	**(12/12/2018 - 24/02/2019)** ((((CAPPRM:AS1210 , CAPPRM:CE , CAPPRM:MHLW , CAPPRM:MOM) + MOVOL:400V , CAPPRM:CE + COOL:AIR + MOVOL:500V) + FREQ:50HZ , ((MOVOL:380V , MOVOL:460V) + CAPPRM:ASME , CAPPRM:MHLW + MOVOL:460V) + FREQ:60HZ , CAPPRM:MHLW + COOL:AIR + MOVOL:200V) + CAPPRE:IEC , ((MOVOL:230V , MOVOL:575V) + COOL:AIR , MOVOL:460V) + CAPPRE:ULCUL + CAPPRM:ASME + FREQ:60HZ) **(25/02/2019 - 04/02/2020)** ((((CAPPRM:AS1210 , CAPPRM:CE , CAPPRM:MHLW , CAPPRM:MOM) + MOVOL:400V , CAPPRM:CE + MOVOL:500V , CAPPRM:MHLW + MOVOL:200V) + FREQ:50HZ , ((MOVOL:200V , MOVOL:460V) + CAPPRM:MHLW , (MOVOL:380V , MOVOL:460V) + CAPPRM:ASME) + FREQ:60HZ) + CAPPRE:IEC , (MOVOL:230V , MOVOL:460V , MOVOL:575V) + CAPPRE:ULCUL + CAPPRM:ASME + FREQ:60HZ) + COOL:AIR **(05/02/2020 - 30/12/2027)** (CAPPRE:IEC + CAPPRM:MHLW + MOVOL:200V , CAPPRE:ULCUL + CAPPRM:ASME + FREQ:60HZ + MOVOL:230V) + COOL:AIR	X3

Legend:

CAPPRE:IEC - Component approval electrical:IEC
CAPPRE:ULCUL - Component approval electrical:UL/cUL
CAPPRM:AS1210 - Component approval mechanical:AS1210
CAPPRM:ASME - Component approval mechanical:ASME
CAPPRM:CE - Component approval mechanical:CE
CAPPRM:MHLW - Component approval mechanical:MHLW
CAPPRM:MOM - Component approval mechanical:MOM
COOL:AIR - Cooling:Air cooled
FREQ:50HZ - Frequency:50 Hz
FREQ:60HZ - Frequency:60 Hz
IDRY:N - Integrated dryer:No
MODEL:GA110VP_16 - Model:GA 110VSD+
MOVOL:200V - Supply voltage:200 V
MOVOL:230V - Supply voltage:230 V
MOVOL:380V - Supply voltage:380 V
MOVOL:400V - Supply voltage:400 V
MOVOL:460V - Supply voltage:460 V
MOVOL:500V - Supply voltage:500 V
MOVOL:575V - Supply voltage:575 V

21.24 - Cubicle components GA 110 VSD+ - (200V-380V-460V/60Hz - IEC, 230V-460V-575V/60Hz - UL-cUL, 200V-400V-500V/50Hz - IEC) - Pack (12/12/2018 - 04/02/2020)

((((CAPPRM:AS1210 , CAPPRM:CE , CAPPRM:MHLW , CAPPRM:MOM) + MOVOL:400V , CAPPRM:CE + COOL:AIR + MOVOL:500V) + FREQ:50HZ , ((MOVOL:380V , MOVOL:460V) + CAPPRM:ASME , CAPPRM:MHLW + MOVOL:460V) + FREQ:60HZ) + CAPPRE:IEC , (COOL:AIR + MOVOL:575V , MOVOL:460V) + CAPPRE:ULCUL + CAPPRM:ASME + FREQ:60HZ) + IDRY:N + MODEL:GA110VP_16

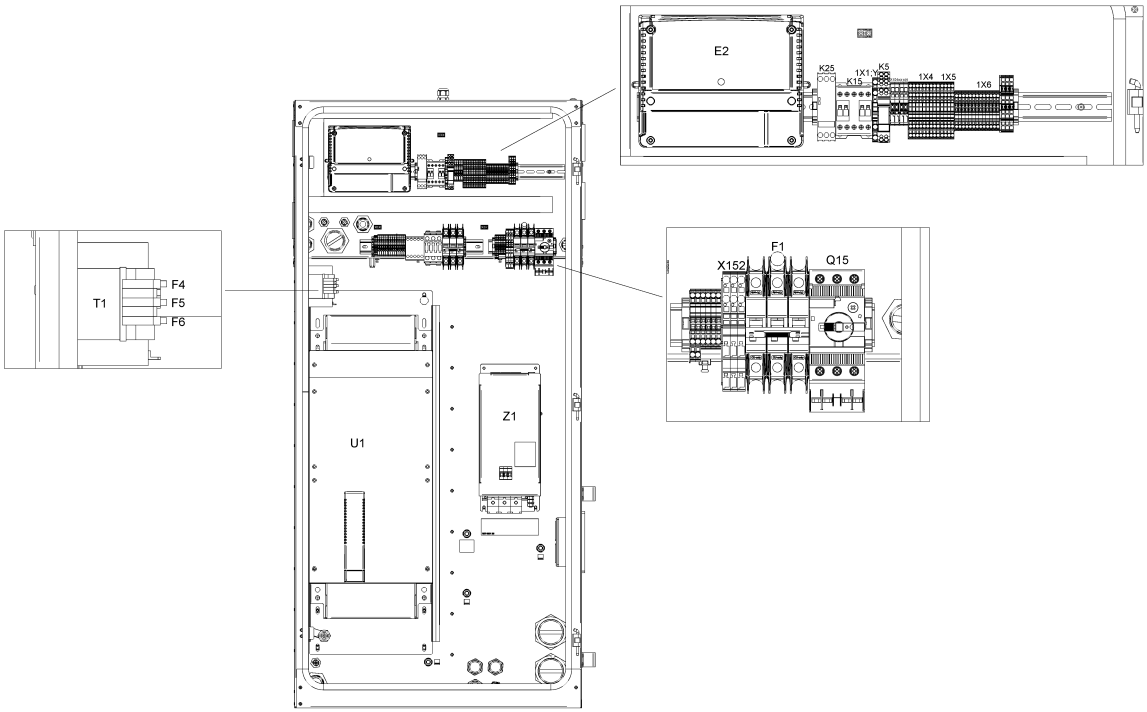

21.24 - Cubicle components GA 110 VSD+ - (200V-380V-460V/60Hz - IEC, 230V-460V-575V/60Hz - UL-cUL, 200V-400V-500V/50Hz - IEC) - Pack (12/12/2018 - 04/02/2020)

((((CAPPRM:AS1210 , CAPPRM:CE , CAPPRM:MHLW , CAPPRM:MOM) + MOVOL:400V , CAPPRM:CE + COOL:AIR + MOVOL:500V) + FREQ:50HZ , ((MOVOL:380V , MOVOL:460V) + CAPPRM:ASME , CAPPRM:MHLW + MOVOL:460V) + FREQ:60HZ) + CAPPRE:IEC , (COOL:AIR + MOVOL:575V , MOVOL:460V) + CAPPRE:ULCUL + CAPPRM:ASME + FREQ:60HZ) + IDRY:N + MODEL:GA110VP_16

Ref	Part Number	Qty	Name	Validity	EL
	1089 9572 04	1	LINE FILTER	**(12/12/2018 - 24/02/2019)** ((((CAPPRM:AS1210 , CAPPRM:CE , CAPPRM:MHLW , CAPPRM:MOM) + MOVOL:400V , CAPPRM:CE + COOL:AIR + MOVOL:500V) + FREQ:50HZ , ((MOVOL:380V , MOVOL:460V) + CAPPRM:ASME , CAPPRM:MHLW + MOVOL:460V) + FREQ:60HZ , CAPPRM:MHLW + COOL:AIR + MOVOL:200V) + CAPPRE:IEC , ((MOVOL:230V , MOVOL:575V) + COOL:AIR , MOVOL:460V) + CAPPRE:ULCUL + CAPPRM:ASME + FREQ:60HZ) **(25/02/2019 - 04/02/2020)** ((((CAPPRM:AS1210 , CAPPRM:CE , CAPPRM:MHLW , CAPPRM:MOM) + MOVOL:400V , CAPPRM:CE + MOVOL:500V , CAPPRM:MHLW + MOVOL:200V) + FREQ:50HZ , ((MOVOL:200V , MOVOL:460V) + CAPPRM:MHLW , (MOVOL:380V , MOVOL:460V) + CAPPRM:ASME) + FREQ:60HZ) + CAPPRE:IEC , (MOVOL:230V , MOVOL:460V , MOVOL:575V) + CAPPRE:ULCUL + CAPPRM:ASME + FREQ:60HZ) + COOL:AIR **(05/02/2020 - 30/12/2027)** (CAPPRE:IEC + CAPPRM:MHLW + MOVOL:200V , CAPPRE:ULCUL + CAPPRM:ASME + FREQ:60HZ + MOVOL:230V) + COOL:AIR	Z1 for 110kw
	Electrical legend:	Z1 for 110kw			
	1089 9562 04	1	STRAP	**(12/12/2018 - 24/02/2019)** ((((CAPPRM:AS1210 , CAPPRM:CE , CAPPRM:MHLW , CAPPRM:MOM) + MOVOL:400V , CAPPRM:CE + COOL:AIR + MOVOL:500V) + FREQ:50HZ , ((MOVOL:380V , MOVOL:460V) + CAPPRM:ASME , CAPPRM:MHLW + MOVOL:460V) + FREQ:60HZ , CAPPRM:MHLW + COOL:AIR + MOVOL:200V) + CAPPRE:IEC , ((MOVOL:230V , MOVOL:575V) + COOL:AIR , MOVOL:460V) + CAPPRE:ULCUL + CAPPRM:ASME + FREQ:60HZ) **(25/02/2019 - 04/02/2020)** ((((CAPPRM:AS1210 , CAPPRM:CE , CAPPRM:MHLW , CAPPRM:MOM) + MOVOL:400V , CAPPRM:CE + MOVOL:500V , CAPPRM:MHLW + MOVOL:200V) + FREQ:50HZ , ((MOVOL:200V , MOVOL:460V) + CAPPRM:MHLW , (MOVOL:380V , MOVOL:460V) + CAPPRM:ASME) + FREQ:60HZ) + CAPPRE:IEC , (MOVOL:230V , MOVOL:460V , MOVOL:575V) + CAPPRE:ULCUL + CAPPRM:ASME + FREQ:60HZ) + COOL:AIR **(05/02/2020 - 30/12/2027)** (CAPPRE:IEC + CAPPRM:MHLW + MOVOL:200V , CAPPRE:ULCUL + CAPPRM:ASME + FREQ:60HZ + MOVOL:230V) + COOL:AIR	HF-screen

Legend:

CAPPRE:IEC - Component approval electrical:IEC
CAPPRE:ULCUL - Component approval electrical:UL/cUL
CAPPRM:AS1210 - Component approval mechanical:AS1210
CAPPRM:ASME - Component approval mechanical:ASME
CAPPRM:CE - Component approval mechanical:CE
CAPPRM:MHLW - Component approval mechanical:MHLW
CAPPRM:MOM - Component approval mechanical:MOM
COOL:AIR - Cooling:Air cooled
FREQ:50HZ - Frequency:50 Hz
FREQ:60HZ - Frequency:60 Hz
IDRY:N - Integrated dryer:No
MODEL:GA110VP_16 - Model:GA 110VSD+
MOVOL:200V - Supply voltage:200 V
MOVOL:230V - Supply voltage:230 V
MOVOL:380V - Supply voltage:380 V
MOVOL:400V - Supply voltage:400 V
MOVOL:460V - Supply voltage:460 V
MOVOL:500V - Supply voltage:500 V
MOVOL:575V - Supply voltage:575 V

21.24 - Cubicle components GA 110 VSD+ - (200V-380V-460V/60Hz - IEC, 230V-460V-575V/60Hz - UL-cUL, 200V-400V-500V/50Hz - IEC) - Pack (12/12/2018 - 04/02/2020)

((((CAPPRM:AS1210 , CAPPRM:CE , CAPPRM:MHLW , CAPPRM:MOM) + MOVOL:400V , CAPPRM:CE + COOL:AIR + MOVOL:500V) + FREQ:50HZ , ((MOVOL:380V , MOVOL:460V) + CAPPRM:ASME , CAPPRM:MHLW + MOVOL:460V) + FREQ:60HZ) + CAPPRE:IEC , (COOL:AIR + MOVOL:575V , MOVOL:460V) + CAPPRE:ULCUL + CAPPRM:ASME + FREQ:60HZ) + IDRY:N + MODEL:GA110VP_16

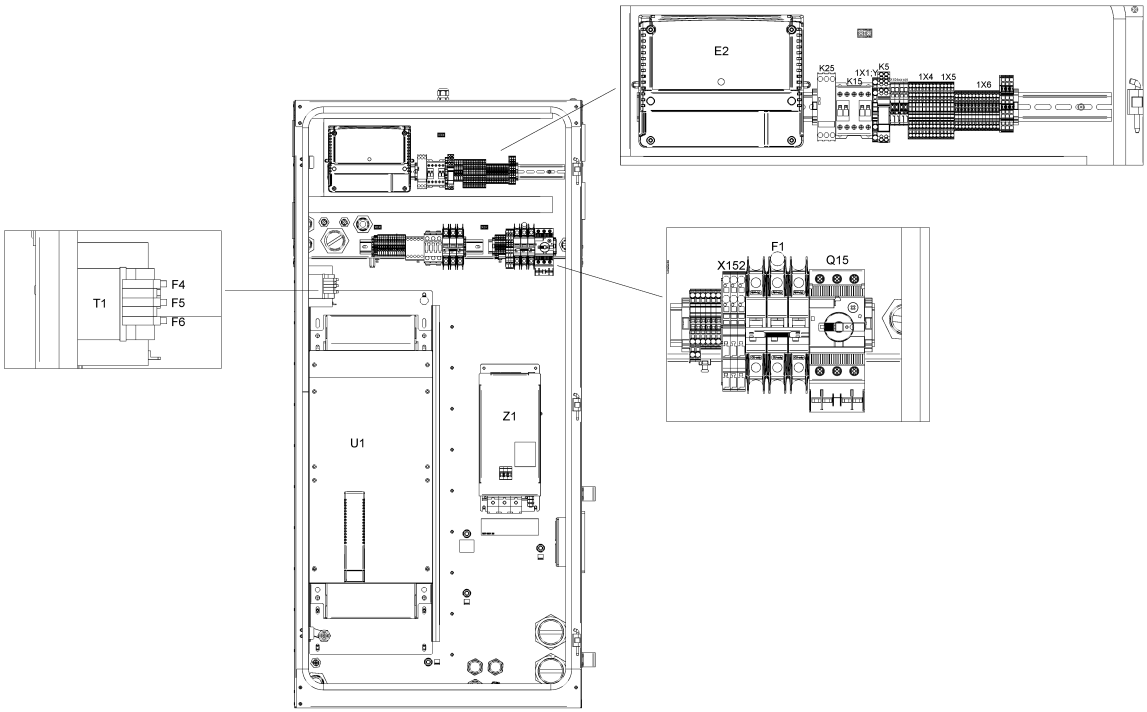

21.24 - Cubicle components GA 110 VSD+ - (200V-380V-460V/60Hz - IEC, 230V-460V-575V/60Hz - UL-cUL, 200V-400V-500V/50Hz - IEC) - Pack (12/12/2018 - 04/02/2020)

((((CAPPRM:AS1210 , CAPPRM:CE , CAPPRM:MHLW , CAPPRM:MOM) + MOVOL:400V , CAPPRM:CE + COOL:AIR + MOVOL:500V) + FREQ:50HZ , ((MOVOL:380V , MOVOL:460V) + CAPPRM:ASME , CAPPRM:MHLW + MOVOL:460V) + FREQ:60HZ) + CAPPRE:IEC , (COOL:AIR + MOVOL:575V , MOVOL:460V) + CAPPRE:ULCUL + CAPPRM:ASME + FREQ:60HZ) + IDRY:N + MODEL:GA110VP_16

Ref	Part Number	Qty	Name	Validity	EL
	1089 9514 56	1	TRANSFORMER	**(12/12/2018 - 24/02/2019)** ((((CAPPRM:AS1210 , CAPPRM:CE , CAPPRM:MHLW , CAPPRM:MOM) + MOVOL:400V , CAPPRM:CE + COOL:AIR + MOVOL:500V) + FREQ:50HZ , ((MOVOL:380V , MOVOL:460V) + CAPPRM:ASME , CAPPRM:MHLW + MOVOL:460V) + FREQ:60HZ , CAPPRM:MHLW + COOL:AIR + MOVOL:200V) + CAPPRE:IEC , ((MOVOL:230V , MOVOL:575V) + COOL:AIR , MOVOL:460V) + CAPPRE:ULCUL + CAPPRM:ASME + FREQ:60HZ) **(25/02/2019 - 04/02/2020)** ((((CAPPRM:AS1210 , CAPPRM:CE , CAPPRM:MHLW , CAPPRM:MOM) + MOVOL:400V , CAPPRM:CE + MOVOL:500V , CAPPRM:MHLW + MOVOL:200V) + FREQ:50HZ , ((MOVOL:200V , MOVOL:460V) + CAPPRM:MHLW , (MOVOL:380V , MOVOL:460V) + CAPPRM:ASME) + FREQ:60HZ) + CAPPRE:IEC , (MOVOL:230V , MOVOL:460V , MOVOL:575V) + CAPPRE:ULCUL + CAPPRM:ASME + FREQ:60HZ) + COOL:AIR **(05/02/2020 - 30/12/2027)** (CAPPRE:IEC + CAPPRM:MHLW + MOVOL:200V , CAPPRE:ULCUL + CAPPRM:ASME + FREQ:60HZ + MOVOL:230V) + COOL:AIR	T1
	1089 9522 26	1	CIRCUIT BREAKER	**(12/12/2018 - 24/02/2019)** ((((CAPPRM:AS1210 , CAPPRM:CE , CAPPRM:MHLW , CAPPRM:MOM) + MOVOL:400V , CAPPRM:CE + COOL:AIR + MOVOL:500V) + FREQ:50HZ , ((MOVOL:380V , MOVOL:460V) + CAPPRM:ASME , CAPPRM:MHLW + MOVOL:460V) + FREQ:60HZ , CAPPRM:MHLW + COOL:AIR + MOVOL:200V) + CAPPRE:IEC , ((MOVOL:230V , MOVOL:575V) + COOL:AIR , MOVOL:460V) + CAPPRE:ULCUL + CAPPRM:ASME + FREQ:60HZ) **(25/02/2019 - 04/02/2020)** ((((CAPPRM:AS1210 , CAPPRM:CE , CAPPRM:MHLW , CAPPRM:MOM) + MOVOL:400V , CAPPRM:CE + MOVOL:500V , CAPPRM:MHLW + MOVOL:200V) + FREQ:50HZ , ((MOVOL:200V , MOVOL:460V) + CAPPRM:MHLW , (MOVOL:380V , MOVOL:460V) + CAPPRM:ASME) + FREQ:60HZ) + CAPPRE:IEC , (MOVOL:230V , MOVOL:460V , MOVOL:575V) + CAPPRE:ULCUL + CAPPRM:ASME + FREQ:60HZ) + COOL:AIR **(05/02/2020 - 30/12/2027)** (CAPPRE:IEC + CAPPRM:MHLW + MOVOL:200V , CAPPRE:ULCUL + CAPPRM:ASME + FREQ:60HZ + MOVOL:230V) + COOL:AIR	F1

Legend:

CAPPRE:IEC - Component approval electrical:IEC
CAPPRE:ULCUL - Component approval electrical:UL/cUL
CAPPRM:AS1210 - Component approval mechanical:AS1210
CAPPRM:ASME - Component approval mechanical:ASME
CAPPRM:CE - Component approval mechanical:CE
CAPPRM:MHLW - Component approval mechanical:MHLW
CAPPRM:MOM - Component approval mechanical:MOM
COOL:AIR - Cooling:Air cooled
FREQ:50HZ - Frequency:50 Hz
FREQ:60HZ - Frequency:60 Hz
IDRY:N - Integrated dryer:No
MODEL:GA110VP_16 - Model:GA 110VSD+
MOVOL:200V - Supply voltage:200 V
MOVOL:230V - Supply voltage:230 V
MOVOL:380V - Supply voltage:380 V
MOVOL:400V - Supply voltage:400 V
MOVOL:460V - Supply voltage:460 V
MOVOL:500V - Supply voltage:500 V
MOVOL:575V - Supply voltage:575 V

21.24 - Cubicle components GA 110 VSD+ - (200V-380V-460V/60Hz - IEC, 230V-460V-575V/60Hz - UL-cUL, 200V-400V-500V/50Hz - IEC) - Pack (12/12/2018 - 04/02/2020)

((((CAPPRM:AS1210 , CAPPRM:CE , CAPPRM:MHLW , CAPPRM:MOM) + MOVOL:400V , CAPPRM:CE + COOL:AIR + MOVOL:500V) + FREQ:50HZ , ((MOVOL:380V , MOVOL:460V) + CAPPRM:ASME , CAPPRM:MHLW + MOVOL:460V) + FREQ:60HZ) + CAPPRE:IEC , (COOL:AIR + MOVOL:575V , MOVOL:460V) + CAPPRE:ULCUL + CAPPRM:ASME + FREQ:60HZ) + IDRY:N + MODEL:GA110VP_16

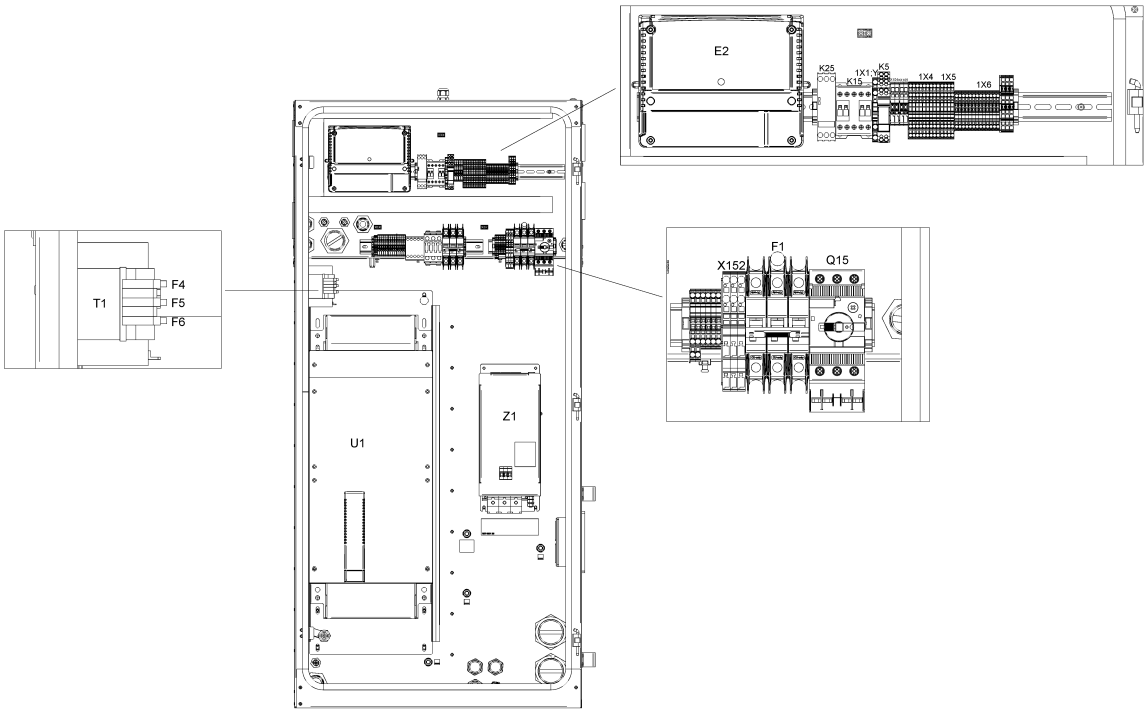

21.24 - Cubicle components GA 110 VSD+ - (200V-380V-460V/60Hz - IEC, 230V-460V-575V/60Hz - UL-cUL, 200V-400V-500V/50Hz - IEC) - Pack (12/12/2018 - 04/02/2020)

((((CAPPRM:AS1210 , CAPPRM:CE , CAPPRM:MHLW , CAPPRM:MOM) + MOVOL:400V , CAPPRM:CE + COOL:AIR + MOVOL:500V) + FREQ:50HZ , ((MOVOL:380V , MOVOL:460V) + CAPPRM:ASME , CAPPRM:MHLW + MOVOL:460V) + FREQ:60HZ) + CAPPRE:IEC , (COOL:AIR + MOVOL:575V , MOVOL:460V) + CAPPRE:ULCUL + CAPPRM:ASME + FREQ:60HZ) + IDRY:N + MODEL:GA110VP_16

Ref	Part Number	Qty	Name	Validity	EL
	1089 9513 41	1	PUSH BUTTON	**(12/12/2018 - 24/02/2019)** ((((CAPPRM:AS1210 , CAPPRM:CE , CAPPRM:MHLW , CAPPRM:MOM) + MOVOL:400V , CAPPRM:CE + COOL:AIR + MOVOL:500V) + FREQ:50HZ , ((MOVOL:380V , MOVOL:460V) + CAPPRM:ASME , CAPPRM:MHLW + MOVOL:460V) + FREQ:60HZ , CAPPRM:MHLW + COOL:AIR + MOVOL:200V) + CAPPRE:IEC , ((MOVOL:230V , MOVOL:575V) + COOL:AIR , MOVOL:460V) + CAPPRE:ULCUL + CAPPRM:ASME + FREQ:60HZ) **(25/02/2019 - 04/02/2020)** ((((CAPPRM:AS1210 , CAPPRM:CE , CAPPRM:MHLW , CAPPRM:MOM) + MOVOL:400V , CAPPRM:CE + MOVOL:500V , CAPPRM:MHLW + MOVOL:200V) + FREQ:50HZ , ((MOVOL:200V , MOVOL:460V) + CAPPRM:MHLW , (MOVOL:380V , MOVOL:460V) + CAPPRM:ASME) + FREQ:60HZ) + CAPPRE:IEC , (MOVOL:230V , MOVOL:460V , MOVOL:575V) + CAPPRE:ULCUL + CAPPRM:ASME + FREQ:60HZ) + COOL:AIR **(05/02/2020 - 30/12/2027)** (CAPPRE:IEC + CAPPRM:MHLW + MOVOL:200V , CAPPRE:ULCUL + CAPPRM:ASME + FREQ:60HZ + MOVOL:230V) + COOL:AIR	S3
	1089 9513 28	1	HOLDER	**(12/12/2018 - 24/02/2019)** ((((CAPPRM:AS1210 , CAPPRM:CE , CAPPRM:MHLW , CAPPRM:MOM) + MOVOL:400V , CAPPRM:CE + COOL:AIR + MOVOL:500V) + FREQ:50HZ , ((MOVOL:380V , MOVOL:460V) + CAPPRM:ASME , CAPPRM:MHLW + MOVOL:460V) + FREQ:60HZ , CAPPRM:MHLW + COOL:AIR + MOVOL:200V) + CAPPRE:IEC , ((MOVOL:230V , MOVOL:575V) + COOL:AIR , MOVOL:460V) + CAPPRE:ULCUL + CAPPRM:ASME + FREQ:60HZ) **(25/02/2019 - 04/02/2020)** ((((CAPPRM:AS1210 , CAPPRM:CE , CAPPRM:MHLW , CAPPRM:MOM) + MOVOL:400V , CAPPRM:CE + MOVOL:500V , CAPPRM:MHLW + MOVOL:200V) + FREQ:50HZ , ((MOVOL:200V , MOVOL:460V) + CAPPRM:MHLW , (MOVOL:380V , MOVOL:460V) + CAPPRM:ASME) + FREQ:60HZ) + CAPPRE:IEC , (MOVOL:230V , MOVOL:460V , MOVOL:575V) + CAPPRE:ULCUL + CAPPRM:ASME + FREQ:60HZ) + COOL:AIR **(05/02/2020 - 30/12/2027)** (CAPPRE:IEC + CAPPRM:MHLW + MOVOL:200V , CAPPRE:ULCUL + CAPPRM:ASME + FREQ:60HZ + MOVOL:230V) + COOL:AIR	S3

Legend:

CAPPRE:IEC - Component approval electrical:IEC
CAPPRE:ULCUL - Component approval electrical:UL/cUL
CAPPRM:AS1210 - Component approval mechanical:AS1210
CAPPRM:ASME - Component approval mechanical:ASME
CAPPRM:CE - Component approval mechanical:CE
CAPPRM:MHLW - Component approval mechanical:MHLW
CAPPRM:MOM - Component approval mechanical:MOM
COOL:AIR - Cooling:Air cooled
FREQ:50HZ - Frequency:50 Hz
FREQ:60HZ - Frequency:60 Hz
IDRY:N - Integrated dryer:No
MODEL:GA110VP_16 - Model:GA 110VSD+
MOVOL:200V - Supply voltage:200 V
MOVOL:230V - Supply voltage:230 V
MOVOL:380V - Supply voltage:380 V
MOVOL:400V - Supply voltage:400 V
MOVOL:460V - Supply voltage:460 V
MOVOL:500V - Supply voltage:500 V
MOVOL:575V - Supply voltage:575 V

21.24 - Cubicle components GA 110 VSD+ - (200V-380V-460V/60Hz - IEC, 230V-460V-575V/60Hz - UL-cUL, 200V-400V-500V/50Hz - IEC) - Pack (12/12/2018 - 04/02/2020)

((((CAPPRM:AS1210 , CAPPRM:CE , CAPPRM:MHLW , CAPPRM:MOM) + MOVOL:400V , CAPPRM:CE + COOL:AIR + MOVOL:500V) + FREQ:50HZ , ((MOVOL:380V , MOVOL:460V) + CAPPRM:ASME , CAPPRM:MHLW + MOVOL:460V) + FREQ:60HZ) + CAPPRE:IEC , (COOL:AIR + MOVOL:575V , MOVOL:460V) + CAPPRE:ULCUL + CAPPRM:ASME + FREQ:60HZ) + IDRY:N + MODEL:GA110VP_16

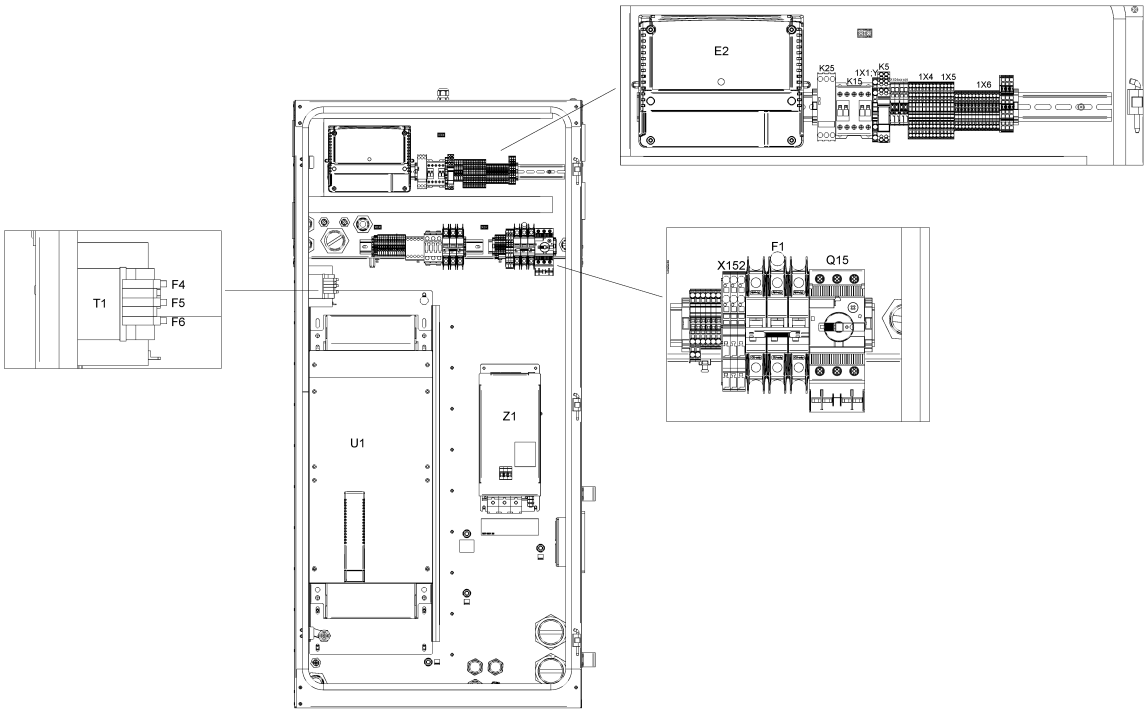

21.24 - Cubicle components GA 110 VSD+ - (200V-380V-460V/60Hz - IEC, 230V-460V-575V/60Hz - UL-cUL, 200V-400V-500V/50Hz - IEC) - Pack (12/12/2018 - 04/02/2020)

((((CAPPRM:AS1210 , CAPPRM:CE , CAPPRM:MHLW , CAPPRM:MOM) + MOVOL:400V , CAPPRM:CE + COOL:AIR + MOVOL:500V) + FREQ:50HZ , ((MOVOL:380V , MOVOL:460V) + CAPPRM:ASME , CAPPRM:MHLW + MOVOL:460V) + FREQ:60HZ) + CAPPRE:IEC , (COOL:AIR + MOVOL:575V , MOVOL:460V) + CAPPRE:ULCUL + CAPPRM:ASME + FREQ:60HZ) + IDRY:N + MODEL:GA110VP_16

Ref	Part Number	Qty	Name	Validity	EL
	~~1089 9513 30~~	4	CONTACTOR	**(12/12/2018 - 24/02/2019)** ((((CAPPRM:AS1210 , CAPPRM:CE , CAPPRM:MHLW , CAPPRM:MOM) + MOVOL:400V , CAPPRM:CE + COOL:AIR + MOVOL:500V) + FREQ:50HZ , ((MOVOL:380V , MOVOL:460V) + CAPPRM:ASME , CAPPRM:MHLW + MOVOL:460V) + FREQ:60HZ , CAPPRM:MHLW + COOL:AIR + MOVOL:200V) + CAPPRE:IEC , ((MOVOL:230V , MOVOL:575V) + COOL:AIR , MOVOL:460V) + CAPPRE:ULCUL + CAPPRM:ASME + FREQ:60HZ) **(25/02/2019 - 04/02/2020)** ((((CAPPRM:AS1210 , CAPPRM:CE , CAPPRM:MHLW , CAPPRM:MOM) + MOVOL:400V , CAPPRM:CE + MOVOL:500V , CAPPRM:MHLW + MOVOL:200V) + FREQ:50HZ , ((MOVOL:200V , MOVOL:460V) + CAPPRM:MHLW , (MOVOL:380V , MOVOL:460V) + CAPPRM:ASME) + FREQ:60HZ) + CAPPRE:IEC , (MOVOL:230V , MOVOL:460V , MOVOL:575V) + CAPPRE:ULCUL + CAPPRM:ASME + FREQ:60HZ) + COOL:AIR **(05/02/2020 - 30/12/2027)** (CAPPRE:IEC + CAPPRM:MHLW + MOVOL:200V , CAPPRE:ULCUL + CAPPRM:ASME + FREQ:60HZ + MOVOL:230V) + COOL:AIR	S3
	Substituted by:	1089 9513 04 - CONTACT BLOCK (quantity: 1)			
	1088 0031 02	1	CONNECTOR 2-POLE	**(12/12/2018 - 17/02/2019)** ((((CAPPRM:AS1210 , CAPPRM:CE , CAPPRM:MHLW , CAPPRM:MOM) + MOVOL:400V , CAPPRM:CE + COOL:AIR + MOVOL:500V) + FREQ:50HZ , ((MOVOL:380V , MOVOL:460V) + CAPPRM:ASME , CAPPRM:MHLW + MOVOL:460V) + FREQ:60HZ , CAPPRM:MHLW + COOL:AIR + MOVOL:200V) + CAPPRE:IEC , ((MOVOL:230V , MOVOL:575V) + COOL:AIR , MOVOL:460V) + CAPPRE:ULCUL + CAPPRM:ASME + FREQ:60HZ)	
	1088 0039 07	3	TERMINAL	**(12/12/2018 - 24/02/2019)** ((((CAPPRM:AS1210 , CAPPRM:CE , CAPPRM:MHLW , CAPPRM:MOM) + MOVOL:400V , CAPPRM:CE + COOL:AIR + MOVOL:500V) + FREQ:50HZ , ((MOVOL:380V , MOVOL:460V) + CAPPRM:ASME , CAPPRM:MHLW + MOVOL:460V) + FREQ:60HZ , CAPPRM:MHLW + COOL:AIR + MOVOL:200V) + CAPPRE:IEC , ((MOVOL:230V , MOVOL:575V) + COOL:AIR , MOVOL:460V) + CAPPRE:ULCUL + CAPPRM:ASME + FREQ:60HZ) **(25/02/2019 - 04/02/2020)** ((((CAPPRM:AS1210 , CAPPRM:CE , CAPPRM:MHLW , CAPPRM:MOM) + MOVOL:400V , CAPPRM:CE + MOVOL:500V , CAPPRM:MHLW + MOVOL:200V) + FREQ:50HZ , ((MOVOL:200V , MOVOL:460V) + CAPPRM:MHLW , (MOVOL:380V , MOVOL:460V) + CAPPRM:ASME) + FREQ:60HZ) + CAPPRE:IEC , (MOVOL:230V , MOVOL:460V , MOVOL:575V) + CAPPRE:ULCUL + CAPPRM:ASME + FREQ:60HZ) + COOL:AIR **(05/02/2020 - 30/12/2027)** (CAPPRE:IEC + CAPPRM:MHLW + MOVOL:200V , CAPPRE:ULCUL + CAPPRM:ASME + FREQ:60HZ + MOVOL:230V) + COOL:AIR	X152

Legend:

CAPPRE:IEC - Component approval electrical:IEC
CAPPRE:ULCUL - Component approval electrical:UL/cUL
CAPPRM:AS1210 - Component approval mechanical:AS1210
CAPPRM:ASME - Component approval mechanical:ASME
CAPPRM:CE - Component approval mechanical:CE
CAPPRM:MHLW - Component approval mechanical:MHLW
CAPPRM:MOM - Component approval mechanical:MOM
COOL:AIR - Cooling:Air cooled
FREQ:50HZ - Frequency:50 Hz
FREQ:60HZ - Frequency:60 Hz
IDRY:N - Integrated dryer:No
MODEL:GA110VP_16 - Model:GA 110VSD+
MOVOL:200V - Supply voltage:200 V
MOVOL:230V - Supply voltage:230 V
MOVOL:380V - Supply voltage:380 V
MOVOL:400V - Supply voltage:400 V
MOVOL:460V - Supply voltage:460 V
MOVOL:500V - Supply voltage:500 V
MOVOL:575V - Supply voltage:575 V

21.24 - Cubicle components GA 110 VSD+ - (200V-380V-460V/60Hz - IEC, 230V-460V-575V/60Hz - UL-cUL, 200V-400V-500V/50Hz - IEC) - Pack (12/12/2018 - 04/02/2020)

((((CAPPRM:AS1210 , CAPPRM:CE , CAPPRM:MHLW , CAPPRM:MOM) + MOVOL:400V , CAPPRM:CE + COOL:AIR + MOVOL:500V) + FREQ:50HZ , ((MOVOL:380V , MOVOL:460V) + CAPPRM:ASME , CAPPRM:MHLW + MOVOL:460V) + FREQ:60HZ) + CAPPRE:IEC , (COOL:AIR + MOVOL:575V , MOVOL:460V) + CAPPRE:ULCUL + CAPPRM:ASME + FREQ:60HZ) + IDRY:N + MODEL:GA110VP_16

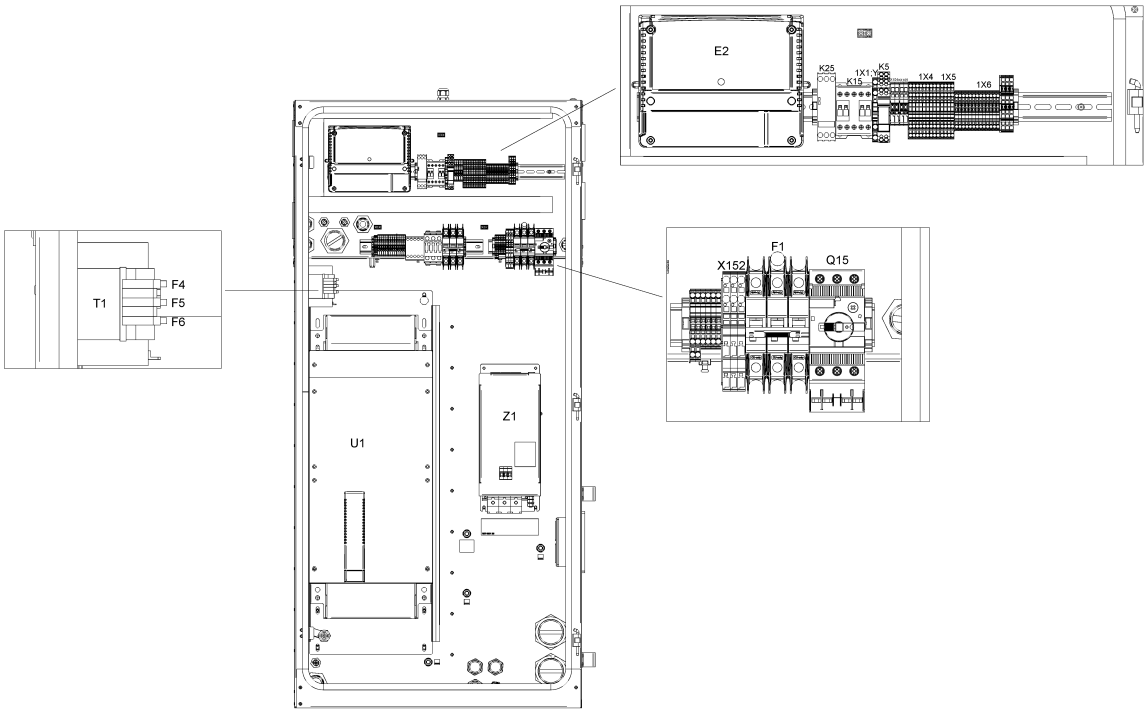

21.24 - Cubicle components GA 110 VSD+ - (200V-380V-460V/60Hz - IEC, 230V-460V-575V/60Hz - UL-cUL, 200V-400V-500V/50Hz - IEC) - Pack (12/12/2018 - 04/02/2020)

((((CAPPRM:AS1210 , CAPPRM:CE , CAPPRM:MHLW , CAPPRM:MOM) + MOVOL:400V , CAPPRM:CE + COOL:AIR + MOVOL:500V) + FREQ:50HZ , ((MOVOL:380V , MOVOL:460V) + CAPPRM:ASME , CAPPRM:MHLW + MOVOL:460V) + FREQ:60HZ) + CAPPRE:IEC , (COOL:AIR + MOVOL:575V , MOVOL:460V) + CAPPRE:ULCUL + CAPPRM:ASME + FREQ:60HZ) + IDRY:N + MODEL:GA110VP_16

Ref	Part Number	Qty	Name	Validity	EL
	1088 0039 05	1	PLATE	**(12/12/2018 - 24/02/2019)** ((((CAPPRM:AS1210 , CAPPRM:CE , CAPPRM:MHLW , CAPPRM:MOM) + MOVOL:400V , CAPPRM:CE + COOL:AIR + MOVOL:500V) + FREQ:50HZ , ((MOVOL:380V , MOVOL:460V) + CAPPRM:ASME , CAPPRM:MHLW + MOVOL:460V) + FREQ:60HZ , CAPPRM:MHLW + COOL:AIR + MOVOL:200V) + CAPPRE:IEC , ((MOVOL:230V , MOVOL:575V) + COOL:AIR , MOVOL:460V) + CAPPRE:ULCUL + CAPPRM:ASME + FREQ:60HZ) **(25/02/2019 - 04/02/2020)** ((((CAPPRM:AS1210 , CAPPRM:CE , CAPPRM:MHLW , CAPPRM:MOM) + MOVOL:400V , CAPPRM:CE + MOVOL:500V , CAPPRM:MHLW + MOVOL:200V) + FREQ:50HZ , ((MOVOL:200V , MOVOL:460V) + CAPPRM:MHLW , (MOVOL:380V , MOVOL:460V) + CAPPRM:ASME) + FREQ:60HZ) + CAPPRE:IEC , (MOVOL:230V , MOVOL:460V , MOVOL:575V) + CAPPRE:ULCUL + CAPPRM:ASME + FREQ:60HZ) + COOL:AIR **(05/02/2020 - 30/12/2027)** (CAPPRE:IEC + CAPPRM:MHLW + MOVOL:200V , CAPPRE:ULCUL + CAPPRM:ASME + FREQ:60HZ + MOVOL:230V) + COOL:AIR	X152
	1088 0039 26	1	CONNECTOR	**(12/12/2018 - 24/02/2019)** ((((CAPPRM:AS1210 , CAPPRM:CE , CAPPRM:MHLW , CAPPRM:MOM) + MOVOL:400V , CAPPRM:CE + COOL:AIR + MOVOL:500V) + FREQ:50HZ , ((MOVOL:380V , MOVOL:460V) + CAPPRM:ASME , CAPPRM:MHLW + MOVOL:460V) + FREQ:60HZ , CAPPRM:MHLW + COOL:AIR + MOVOL:200V) + CAPPRE:IEC , ((MOVOL:230V , MOVOL:575V) + COOL:AIR , MOVOL:460V) + CAPPRE:ULCUL + CAPPRM:ASME + FREQ:60HZ) **(25/02/2019 - 04/02/2020)** ((((CAPPRM:AS1210 , CAPPRM:CE , CAPPRM:MHLW , CAPPRM:MOM) + MOVOL:400V , CAPPRM:CE + MOVOL:500V , CAPPRM:MHLW + MOVOL:200V) + FREQ:50HZ , ((MOVOL:200V , MOVOL:460V) + CAPPRM:MHLW , (MOVOL:380V , MOVOL:460V) + CAPPRM:ASME) + FREQ:60HZ) + CAPPRE:IEC , (MOVOL:230V , MOVOL:460V , MOVOL:575V) + CAPPRE:ULCUL + CAPPRM:ASME + FREQ:60HZ) + COOL:AIR **(05/02/2020 - 30/12/2027)** (CAPPRE:IEC + CAPPRM:MHLW + MOVOL:200V , CAPPRE:ULCUL + CAPPRM:ASME + FREQ:60HZ + MOVOL:230V) + COOL:AIR	

Electrical legend: X152 (remove coding pin 1,3)

Legend:

CAPPRE:IEC - Component approval electrical:IEC
CAPPRE:ULCUL - Component approval electrical:UL/cUL
CAPPRM:AS1210 - Component approval mechanical:AS1210
CAPPRM:ASME - Component approval mechanical:ASME
CAPPRM:CE - Component approval mechanical:CE
CAPPRM:MHLW - Component approval mechanical:MHLW
CAPPRM:MOM - Component approval mechanical:MOM
COOL:AIR - Cooling:Air cooled
FREQ:50HZ - Frequency:50 Hz
FREQ:60HZ - Frequency:60 Hz
IDRY:N - Integrated dryer:No
MODEL:GA110VP_16 - Model:GA 110VSD+
MOVOL:200V - Supply voltage:200 V
MOVOL:230V - Supply voltage:230 V
MOVOL:380V - Supply voltage:380 V
MOVOL:400V - Supply voltage:400 V
MOVOL:460V - Supply voltage:460 V
MOVOL:500V - Supply voltage:500 V
MOVOL:575V - Supply voltage:575 V

21.24 - Cubicle components GA 110 VSD+ - (200V-380V-460V/60Hz - IEC, 230V-460V-575V/60Hz - UL-cUL, 200V-400V-500V/50Hz - IEC) - Pack (12/12/2018 - 04/02/2020)

((((CAPPRM:AS1210 , CAPPRM:CE , CAPPRM:MHLW , CAPPRM:MOM) + MOVOL:400V , CAPPRM:CE + COOL:AIR + MOVOL:500V) + FREQ:50HZ , ((MOVOL:380V , MOVOL:460V) + CAPPRM:ASME , CAPPRM:MHLW + MOVOL:460V) + FREQ:60HZ) + CAPPRE:IEC , (COOL:AIR + MOVOL:575V , MOVOL:460V) + CAPPRE:ULCUL + CAPPRM:ASME + FREQ:60HZ) + IDRY:N + MODEL:GA110VP_16

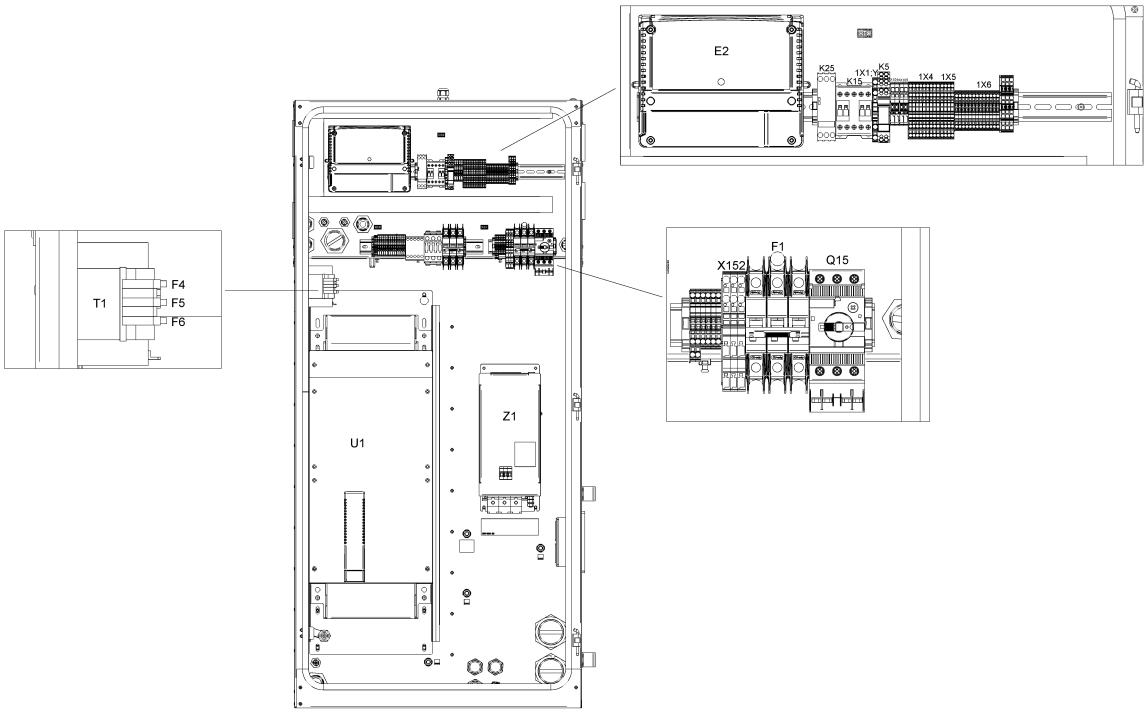

21.24 - Cubicle components GA 110 VSD+ - (200V-380V-460V/60Hz - IEC, 230V-460V-575V/60Hz - UL-cUL, 200V-400V-500V/50Hz - IEC) - Pack (12/12/2018 - 04/02/2020)

((((CAPPRM:AS1210 , CAPPRM:CE , CAPPRM:MHLW , CAPPRM:MOM) + MOVOL:400V , CAPPRM:CE + COOL:AIR + MOVOL:500V) + FREQ:50HZ , ((MOVOL:380V , MOVOL:460V) + CAPPRM:ASME , CAPPRM:MHLW + MOVOL:460V) + FREQ:60HZ) + CAPPRE:IEC , (COOL:AIR + MOVOL:575V , MOVOL:460V) + CAPPRE:ULCUL + CAPPRM:ASME + FREQ:60HZ) + IDRY:N + MODEL:GA110VP_16

Ref	Part Number	Qty	Name	Validity	EL
	1088 0037 99	4	PIN	**(12/12/2018 - 24/02/2019)** ((((CAPPRM:AS1210 , CAPPRM:CE , CAPPRM:MHLW , CAPPRM:MOM) + MOVOL:400V , CAPPRM:CE + COOL:AIR + MOVOL:500V) + FREQ:50HZ , ((MOVOL:380V , MOVOL:460V) + CAPPRM:ASME , CAPPRM:MHLW + MOVOL:460V) + FREQ:60HZ , CAPPRM:MHLW + COOL:AIR + MOVOL:200V) + CAPPRE:IEC , ((MOVOL:230V , MOVOL:575V) + COOL:AIR , MOVOL:460V) + CAPPRE:ULCUL + CAPPRM:ASME + FREQ:60HZ) **(25/02/2019 - 04/02/2020)** ((((CAPPRM:AS1210 , CAPPRM:CE , CAPPRM:MHLW , CAPPRM:MOM) + MOVOL:400V , CAPPRM:CE + MOVOL:500V , CAPPRM:MHLW + MOVOL:200V) + FREQ:50HZ , ((MOVOL:200V , MOVOL:460V) + CAPPRM:MHLW , (MOVOL:380V , MOVOL:460V) + CAPPRM:ASME) + FREQ:60HZ) + CAPPRE:IEC , (MOVOL:230V , MOVOL:460V , MOVOL:575V) + CAPPRE:ULCUL + CAPPRM:ASME + FREQ:60HZ) + COOL:AIR **(05/02/2020 - 30/12/2027)** (CAPPRE:IEC + CAPPRM:MHLW + MOVOL:200V , CAPPRE:ULCUL + CAPPRM:ASME + FREQ:60HZ + MOVOL:230V) + COOL:AIR	X152:1; 3
	~~1088 0031 81~~	7	END STOP BRACKET 6MM	**(12/12/2018 - 24/02/2019)** ((((CAPPRM:AS1210 , CAPPRM:CE , CAPPRM:MHLW , CAPPRM:MOM) + MOVOL:400V , CAPPRM:CE + COOL:AIR + MOVOL:500V) + FREQ:50HZ , ((MOVOL:380V , MOVOL:460V) + CAPPRM:ASME , CAPPRM:MHLW + MOVOL:460V) + FREQ:60HZ , CAPPRM:MHLW + COOL:AIR + MOVOL:200V) + CAPPRE:IEC , ((MOVOL:230V , MOVOL:575V) + COOL:AIR , MOVOL:460V) + CAPPRE:ULCUL + CAPPRM:ASME + FREQ:60HZ) **(25/02/2019 - 04/02/2020)** ((((CAPPRM:AS1210 , CAPPRM:CE , CAPPRM:MHLW , CAPPRM:MOM) + MOVOL:400V , CAPPRM:CE + MOVOL:500V , CAPPRM:MHLW + MOVOL:200V) + FREQ:50HZ , ((MOVOL:200V , MOVOL:460V) + CAPPRM:MHLW , (MOVOL:380V , MOVOL:460V) + CAPPRM:ASME) + FREQ:60HZ) + CAPPRE:IEC , (MOVOL:230V , MOVOL:460V , MOVOL:575V) + CAPPRE:ULCUL + CAPPRM:ASME + FREQ:60HZ) + COOL:AIR **(05/02/2020 - 30/12/2027)** (CAPPRE:IEC + CAPPRM:MHLW + MOVOL:200V , CAPPRE:ULCUL + CAPPRM:ASME + FREQ:60HZ + MOVOL:230V) + COOL:AIR	

Electrical legend: Connector/terminal rail

Substituted by: 1089 0577 82 - END RETAINER (quantity: 1)

Legend:

CAPPRE:IEC - Component approval electrical:IEC
CAPPRM:ASME - Component approval mechanical:ASME
CAPPRM:MOM - Component approval mechanical:MOM
FREQ:60HZ - Frequency:60 Hz
MOVOL:200V - Supply voltage:200 V
MOVOL:400V - Supply voltage:400 V
MOVOL:575V - Supply voltage:575 V
CAPPRE:ULCUL - Component approval electrical:UL/cUL
CAPPRM:CE - Component approval mechanical:CE
COOL:AIR - Cooling:Air cooled
IDRY:N - Integrated dryer:No
MOVOL:230V - Supply voltage:230 V
MOVOL:460V - Supply voltage:460 V
CAPPRM:AS1210 - Component approval mechanical:AS1210
CAPPRM:MHLW - Component approval mechanical:MHLW
FREQ:50HZ - Frequency:50 Hz
MODEL:GA110VP_16 - Model:GA 110VSD+
MOVOL:380V - Supply voltage:380 V
MOVOL:500V - Supply voltage:500 V

21.24 - Cubicle components GA 110 VSD+ - (200V-380V-460V/60Hz - IEC, 230V-460V-575V/60Hz - UL-cUL, 200V-400V-500V/50Hz - IEC) - Pack (12/12/2018 - 04/02/2020)

((((CAPPRM:AS1210 , CAPPRM:CE , CAPPRM:MHLW , CAPPRM:MOM) + MOVOL:400V , CAPPRM:CE + COOL:AIR + MOVOL:500V) + FREQ:50HZ , ((MOVOL:380V , MOVOL:460V) + CAPPRM:ASME , CAPPRM:MHLW + MOVOL:460V) + FREQ:60HZ) + CAPPRE:IEC , (COOL:AIR + MOVOL:575V , MOVOL:460V) + CAPPRE:ULCUL + CAPPRM:ASME + FREQ:60HZ) + IDRY:N + MODEL:GA110VP_16

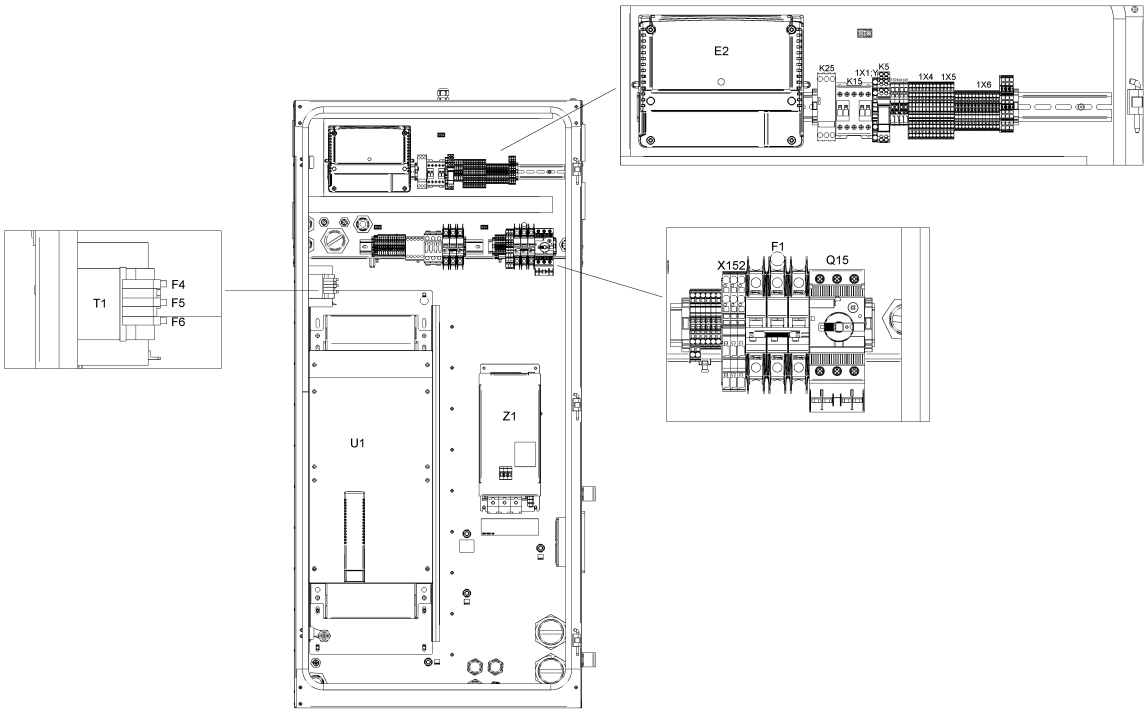

Ref	Part Number	Qty	Name	Validity	EL
	1088 0039 38	2	TERMINAL	**(12/12/2018 - 24/02/2019)** ((((CAPPRM:AS1210 , CAPPRM:CE , CAPPRM:MHLW , CAPPRM:MOM) + MOVOL:400V , CAPPRM:CE + COOL:AIR + MOVOL:500V) + FREQ:50HZ , ((MOVOL:380V , MOVOL:460V) + CAPPRM:ASME , CAPPRM:MHLW + MOVOL:460V) + FREQ:60HZ , CAPPRM:MHLW + COOL:AIR + MOVOL:200V) + CAPPRE:IEC , ((MOVOL:230V , MOVOL:575V) + COOL:AIR , MOVOL:460V) + CAPPRE:ULCUL + CAPPRM:ASME + FREQ:60HZ) **(25/02/2019 - 04/02/2020)** ((((CAPPRM:AS1210 , CAPPRM:CE , CAPPRM:MHLW , CAPPRM:MOM) + MOVOL:400V , CAPPRM:CE + MOVOL:500V , CAPPRM:MHLW + MOVOL:200V) + FREQ:50HZ , ((MOVOL:200V , MOVOL:460V) + CAPPRM:MHLW , (MOVOL:380V , MOVOL:460V) + CAPPRM:ASME) + FREQ:60HZ) + CAPPRE:IEC , (MOVOL:230V , MOVOL:460V , MOVOL:575V) + CAPPRE:ULCUL + CAPPRM:ASME + FREQ:60HZ) + COOL:AIR **(05/02/2020 - 30/12/2027)** (CAPPRE:IEC + CAPPRM:MHLW + MOVOL:200V , CAPPRE:ULCUL + CAPPRM:ASME + FREQ:60HZ + MOVOL:230V) + COOL:AIR	1X11:2,5
	1088 0039 40	1	PLATE	**(12/12/2018 - 24/02/2019)** ((((CAPPRM:AS1210 , CAPPRM:CE , CAPPRM:MHLW , CAPPRM:MOM) + MOVOL:400V , CAPPRM:CE + COOL:AIR + MOVOL:500V) + FREQ:50HZ , ((MOVOL:380V , MOVOL:460V) + CAPPRM:ASME , CAPPRM:MHLW + MOVOL:460V) + FREQ:60HZ , CAPPRM:MHLW + COOL:AIR + MOVOL:200V) + CAPPRE:IEC , ((MOVOL:230V , MOVOL:575V) + COOL:AIR , MOVOL:460V) + CAPPRE:ULCUL + CAPPRM:ASME + FREQ:60HZ) **(25/02/2019 - 04/02/2020)** ((((CAPPRM:AS1210 , CAPPRM:CE , CAPPRM:MHLW , CAPPRM:MOM) + MOVOL:400V , CAPPRM:CE + MOVOL:500V , CAPPRM:MHLW + MOVOL:200V) + FREQ:50HZ , ((MOVOL:200V , MOVOL:460V) + CAPPRM:MHLW , (MOVOL:380V , MOVOL:460V) + CAPPRM:ASME) + FREQ:60HZ) + CAPPRE:IEC , (MOVOL:230V , MOVOL:460V , MOVOL:575V) + CAPPRE:ULCUL + CAPPRM:ASME + FREQ:60HZ) + COOL:AIR **(05/02/2020 - 30/12/2027)** (CAPPRE:IEC + CAPPRM:MHLW + MOVOL:200V , CAPPRE:ULCUL + CAPPRM:ASME + FREQ:60HZ + MOVOL:230V) + COOL:AIR	1X11

Legend:

CAPPRE:IEC - Component approval electrical:IEC
CAPPRE:ULCUL - Component approval electrical:UL/cUL
CAPPRM:AS1210 - Component approval mechanical:AS1210
CAPPRM:ASME - Component approval mechanical:ASME
CAPPRM:CE - Component approval mechanical:CE
CAPPRM:MHLW - Component approval mechanical:MHLW
CAPPRM:MOM - Component approval mechanical:MOM
COOL:AIR - Cooling:Air cooled
FREQ:50HZ - Frequency:50 Hz
FREQ:60HZ - Frequency:60 Hz
IDRY:N - Integrated dryer:No
MODEL:GA110VP_16 - Model:GA 110VSD+
MOVOL:200V - Supply voltage:200 V
MOVOL:230V - Supply voltage:230 V
MOVOL:380V - Supply voltage:380 V
MOVOL:400V - Supply voltage:400 V
MOVOL:460V - Supply voltage:460 V
MOVOL:500V - Supply voltage:500 V
MOVOL:575V - Supply voltage:575 V

21.24 - Cubicle components GA 110 VSD+ - (200V-380V-460V/60Hz - IEC, 230V-460V-575V/60Hz - UL-cUL, 200V-400V-500V/50Hz - IEC) - Pack (12/12/2018 - 04/02/2020)

((((CAPPRM:AS1210 , CAPPRM:CE , CAPPRM:MHLW , CAPPRM:MOM) + MOVOL:400V , CAPPRM:CE + COOL:AIR + MOVOL:500V) + FREQ:50HZ , ((MOVOL:380V , MOVOL:460V) + CAPPRM:ASME , CAPPRM:MHLW + MOVOL:460V) + FREQ:60HZ) + CAPPRE:IEC , (COOL:AIR + MOVOL:575V , MOVOL:460V) + CAPPRE:ULCUL + CAPPRM:ASME + FREQ:60HZ) + IDRY:N + MODEL:GA110VP_16

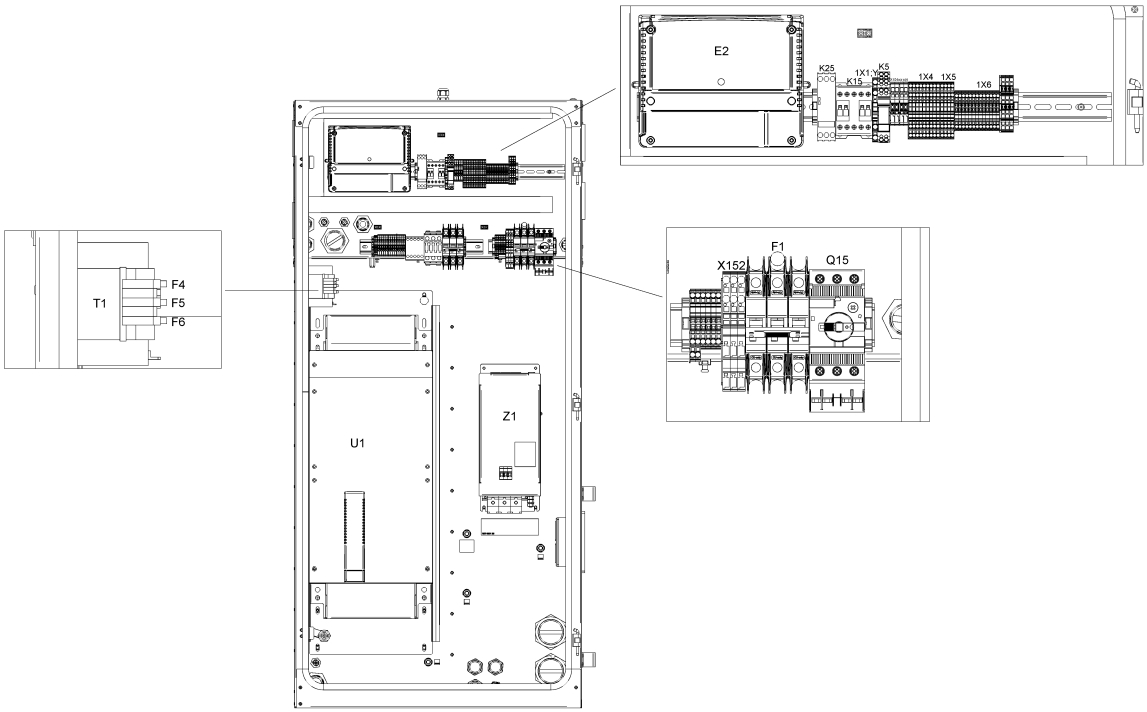

21.24 - Cubicle components GA 110 VSD+ - (200V-380V-460V/60Hz - IEC, 230V-460V-575V/60Hz - UL-cUL, 200V-400V-500V/50Hz - IEC) - Pack (12/12/2018 - 04/02/2020)

((((CAPPRM:AS1210 , CAPPRM:CE , CAPPRM:MHLW , CAPPRM:MOM) + MOVOL:400V , CAPPRM:CE + COOL:AIR + MOVOL:500V) + FREQ:50HZ , ((MOVOL:380V , MOVOL:460V) + CAPPRM:ASME , CAPPRM:MHLW + MOVOL:460V) + FREQ:60HZ) + CAPPRE:IEC , (COOL:AIR + MOVOL:575V , MOVOL:460V) + CAPPRE:ULCUL + CAPPRM:ASME + FREQ:60HZ) + IDRY:N + MODEL:GA110VP_16

Ref	Part Number	Qty	Name	Validity	EL
	1088 0039 34	4	TERMINAL	**(12/12/2018 - 24/02/2019)** ((((CAPPRM:AS1210 , CAPPRM:CE , CAPPRM:MHLW , CAPPRM:MOM) + MOVOL:400V , CAPPRM:CE + COOL:AIR + MOVOL:500V) + FREQ:50HZ , ((MOVOL:380V , MOVOL:460V) + CAPPRM:ASME , CAPPRM:MHLW + MOVOL:460V) + FREQ:60HZ , CAPPRM:MHLW + COOL:AIR + MOVOL:200V) + CAPPRE:IEC , ((MOVOL:230V , MOVOL:575V) + COOL:AIR , MOVOL:460V) + CAPPRE:ULCUL + CAPPRM:ASME + FREQ:60HZ) **(25/02/2019 - 04/02/2020)** ((((CAPPRM:AS1210 , CAPPRM:CE , CAPPRM:MHLW , CAPPRM:MOM) + MOVOL:400V , CAPPRM:CE + MOVOL:500V , CAPPRM:MHLW + MOVOL:200V) + FREQ:50HZ , ((MOVOL:200V , MOVOL:460V) + CAPPRM:MHLW , (MOVOL:380V , MOVOL:460V) + CAPPRM:ASME) + FREQ:60HZ) + CAPPRE:IEC , (MOVOL:230V , MOVOL:460V , MOVOL:575V) + CAPPRE:ULCUL + CAPPRM:ASME + FREQ:60HZ) + COOL:AIR **(05/02/2020 - 30/12/2027)** (CAPPRE:IEC + CAPPRM:MHLW + MOVOL:200V , CAPPRE:ULCUL + CAPPRM:ASME + FREQ:60HZ + MOVOL:230V) + COOL:AIR	
	Electrical legend:	1X11:30,301,34			
	1088 0039 35	1	PLATE	**(12/12/2018 - 24/02/2019)** ((((CAPPRM:AS1210 , CAPPRM:CE , CAPPRM:MHLW , CAPPRM:MOM) + MOVOL:400V , CAPPRM:CE + COOL:AIR + MOVOL:500V) + FREQ:50HZ , ((MOVOL:380V , MOVOL:460V) + CAPPRM:ASME , CAPPRM:MHLW + MOVOL:460V) + FREQ:60HZ , CAPPRM:MHLW + COOL:AIR + MOVOL:200V) + CAPPRE:IEC , ((MOVOL:230V , MOVOL:575V) + COOL:AIR , MOVOL:460V) + CAPPRE:ULCUL + CAPPRM:ASME + FREQ:60HZ) **(25/02/2019 - 04/02/2020)** ((((CAPPRM:AS1210 , CAPPRM:CE , CAPPRM:MHLW , CAPPRM:MOM) + MOVOL:400V , CAPPRM:CE + MOVOL:500V , CAPPRM:MHLW + MOVOL:200V) + FREQ:50HZ , ((MOVOL:200V , MOVOL:460V) + CAPPRM:MHLW , (MOVOL:380V , MOVOL:460V) + CAPPRM:ASME) + FREQ:60HZ) + CAPPRE:IEC , (MOVOL:230V , MOVOL:460V , MOVOL:575V) + CAPPRE:ULCUL + CAPPRM:ASME + FREQ:60HZ) + COOL:AIR **(05/02/2020 - 30/12/2027)** (CAPPRE:IEC + CAPPRM:MHLW + MOVOL:200V , CAPPRE:ULCUL + CAPPRM:ASME + FREQ:60HZ + MOVOL:230V) + COOL:AIR	1X11

Legend:

CAPPRE:IEC - Component approval electrical:IEC
CAPPRE:ULCUL - Component approval electrical:UL/cUL
CAPPRM:AS1210 - Component approval mechanical:AS1210
CAPPRM:ASME - Component approval mechanical:ASME
CAPPRM:CE - Component approval mechanical:CE
CAPPRM:MHLW - Component approval mechanical:MHLW
CAPPRM:MOM - Component approval mechanical:MOM
COOL:AIR - Cooling:Air cooled
FREQ:50HZ - Frequency:50 Hz
FREQ:60HZ - Frequency:60 Hz
IDRY:N - Integrated dryer:No
MODEL:GA110VP_16 - Model:GA 110VSD+
MOVOL:200V - Supply voltage:200 V
MOVOL:230V - Supply voltage:230 V
MOVOL:380V - Supply voltage:380 V
MOVOL:400V - Supply voltage:400 V
MOVOL:460V - Supply voltage:460 V
MOVOL:500V - Supply voltage:500 V
MOVOL:575V - Supply voltage:575 V

21.24 - Cubicle components GA 110 VSD+ - (200V-380V-460V/60Hz - IEC, 230V-460V-575V/60Hz - UL-cUL, 200V-400V-500V/50Hz - IEC) - Pack (12/12/2018 - 04/02/2020)

((((CAPPRM:AS1210 , CAPPRM:CE , CAPPRM:MHLW , CAPPRM:MOM) + MOVOL:400V , CAPPRM:CE + COOL:AIR + MOVOL:500V) + FREQ:50HZ , ((MOVOL:380V , MOVOL:460V) + CAPPRM:ASME , CAPPRM:MHLW + MOVOL:460V) + FREQ:60HZ) + CAPPRE:IEC , (COOL:AIR + MOVOL:575V , MOVOL:460V) + CAPPRE:ULCUL + CAPPRM:ASME + FREQ:60HZ) + IDRY:N + MODEL:GA110VP_16

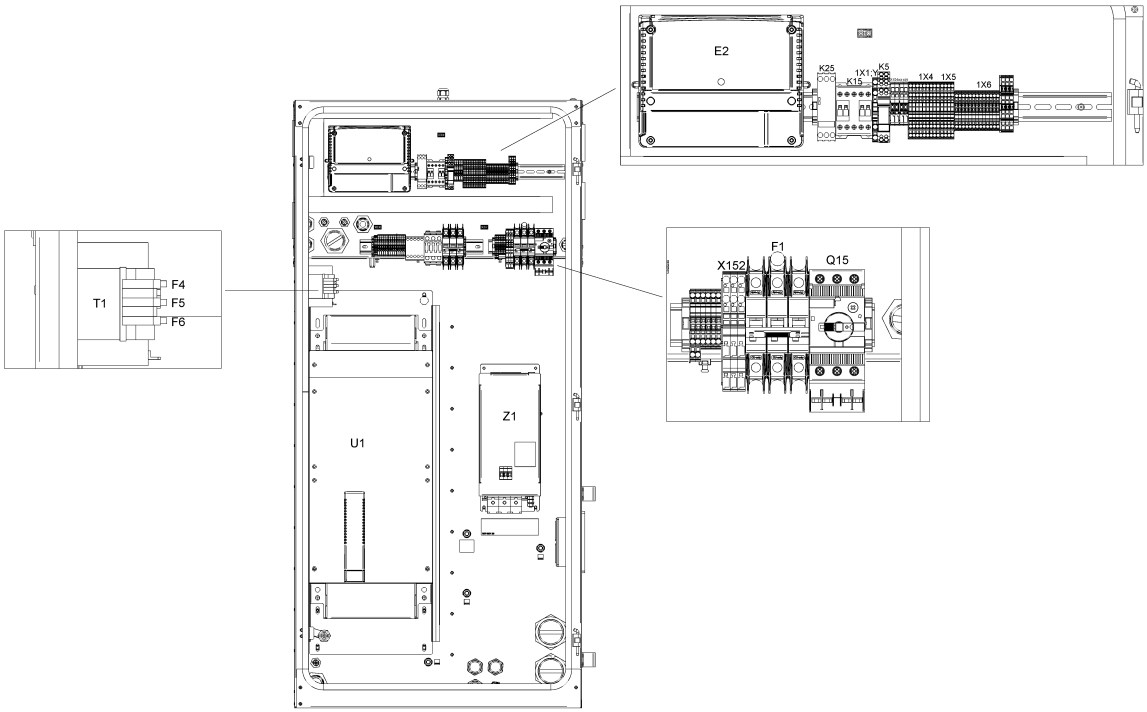

21.24 - Cubicle components GA 110 VSD+ - (200V-380V-460V/60Hz - IEC, 230V-460V-575V/60Hz - UL-cUL, 200V-400V-500V/50Hz - IEC) - Pack (12/12/2018 - 04/02/2020)

((((CAPPRM:AS1210 , CAPPRM:CE , CAPPRM:MHLW , CAPPRM:MOM) + MOVOL:400V , CAPPRM:CE + COOL:AIR + MOVOL:500V) + FREQ:50HZ , ((MOVOL:380V , MOVOL:460V) + CAPPRM:ASME , CAPPRM:MHLW + MOVOL:460V) + FREQ:60HZ) + CAPPRE:IEC , (COOL:AIR + MOVOL:575V , MOVOL:460V) + CAPPRE:ULCUL + CAPPRM:ASME + FREQ:60HZ) + IDRY:N + MODEL:GA110VP_16

Ref	Part Number	Qty	Name	Validity	EL
	1088 0039 04	2	TERMINAL	**(12/12/2018 - 24/02/2019)** ((((CAPPRM:AS1210 , CAPPRM:CE , CAPPRM:MHLW , CAPPRM:MOM) + MOVOL:400V , CAPPRM:CE + COOL:AIR + MOVOL:500V) + FREQ:50HZ , ((MOVOL:380V , MOVOL:460V) + CAPPRM:ASME , CAPPRM:MHLW + MOVOL:460V) + FREQ:60HZ , CAPPRM:MHLW + COOL:AIR + MOVOL:200V) + CAPPRE:IEC , ((MOVOL:230V , MOVOL:575V) + COOL:AIR , MOVOL:460V) + CAPPRE:ULCUL + CAPPRM:ASME + FREQ:60HZ) **(25/02/2019 - 04/02/2020)** ((((CAPPRM:AS1210 , CAPPRM:CE , CAPPRM:MHLW , CAPPRM:MOM) + MOVOL:400V , CAPPRM:CE + MOVOL:500V , CAPPRM:MHLW + MOVOL:200V) + FREQ:50HZ , ((MOVOL:200V , MOVOL:460V) + CAPPRM:MHLW , (MOVOL:380V , MOVOL:460V) + CAPPRM:ASME) + FREQ:60HZ) + CAPPRE:IEC , (MOVOL:230V , MOVOL:460V , MOVOL:575V) + CAPPRE:ULCUL + CAPPRM:ASME + FREQ:60HZ) + COOL:AIR **(05/02/2020 - 30/12/2027)** (CAPPRE:IEC + CAPPRM:MHLW + MOVOL:200V , CAPPRE:ULCUL + CAPPRM:ASME + FREQ:60HZ + MOVOL:230V) + COOL:AIR	X104a
	1088 0037 99	2	PIN	**(12/12/2018 - 24/02/2019)** ((((CAPPRM:AS1210 , CAPPRM:CE , CAPPRM:MHLW , CAPPRM:MOM) + MOVOL:400V , CAPPRM:CE + COOL:AIR + MOVOL:500V) + FREQ:50HZ , ((MOVOL:380V , MOVOL:460V) + CAPPRM:ASME , CAPPRM:MHLW + MOVOL:460V) + FREQ:60HZ , CAPPRM:MHLW + COOL:AIR + MOVOL:200V) + CAPPRE:IEC , ((MOVOL:230V , MOVOL:575V) + COOL:AIR , MOVOL:460V) + CAPPRE:ULCUL + CAPPRM:ASME + FREQ:60HZ) **(25/02/2019 - 04/02/2020)** ((((CAPPRM:AS1210 , CAPPRM:CE , CAPPRM:MHLW , CAPPRM:MOM) + MOVOL:400V , CAPPRM:CE + MOVOL:500V , CAPPRM:MHLW + MOVOL:200V) + FREQ:50HZ , ((MOVOL:200V , MOVOL:460V) + CAPPRM:MHLW , (MOVOL:380V , MOVOL:460V) + CAPPRM:ASME) + FREQ:60HZ) + CAPPRE:IEC , (MOVOL:230V , MOVOL:460V , MOVOL:575V) + CAPPRE:ULCUL + CAPPRM:ASME + FREQ:60HZ) + COOL:AIR **(05/02/2020 - 30/12/2027)** (CAPPRE:IEC + CAPPRM:MHLW + MOVOL:200V , CAPPRE:ULCUL + CAPPRM:ASME + FREQ:60HZ + MOVOL:230V) + COOL:AIR	X104a/X105

Legend:

CAPPRE:IEC - Component approval electrical:IEC
CAPPRE:ULCUL - Component approval electrical:UL/cUL
CAPPRM:AS1210 - Component approval mechanical:AS1210
CAPPRM:ASME - Component approval mechanical:ASME
CAPPRM:CE - Component approval mechanical:CE
CAPPRM:MHLW - Component approval mechanical:MHLW
CAPPRM:MOM - Component approval mechanical:MOM
COOL:AIR - Cooling:Air cooled
FREQ:50HZ - Frequency:50 Hz
FREQ:60HZ - Frequency:60 Hz
IDRY:N - Integrated dryer:No
MODEL:GA110VP_16 - Model:GA 110VSD+
MOVOL:200V - Supply voltage:200 V
MOVOL:230V - Supply voltage:230 V
MOVOL:380V - Supply voltage:380 V
MOVOL:400V - Supply voltage:400 V
MOVOL:460V - Supply voltage:460 V
MOVOL:500V - Supply voltage:500 V
MOVOL:575V - Supply voltage:575 V

21.24 - Cubicle components GA 110 VSD+ - (200V-380V-460V/60Hz - IEC, 230V-460V-575V/60Hz - UL-cUL, 200V-400V-500V/50Hz - IEC) - Pack (12/12/2018 - 04/02/2020)

((((CAPPRM:AS1210 , CAPPRM:CE , CAPPRM:MHLW , CAPPRM:MOM) + MOVOL:400V , CAPPRM:CE + COOL:AIR + MOVOL:500V) + FREQ:50HZ , ((MOVOL:380V , MOVOL:460V) + CAPPRM:ASME , CAPPRM:MHLW + MOVOL:460V) + FREQ:60HZ) + CAPPRE:IEC , (COOL:AIR + MOVOL:575V , MOVOL:460V) + CAPPRE:ULCUL + CAPPRM:ASME + FREQ:60HZ) + IDRY:N + MODEL:GA110VP_16

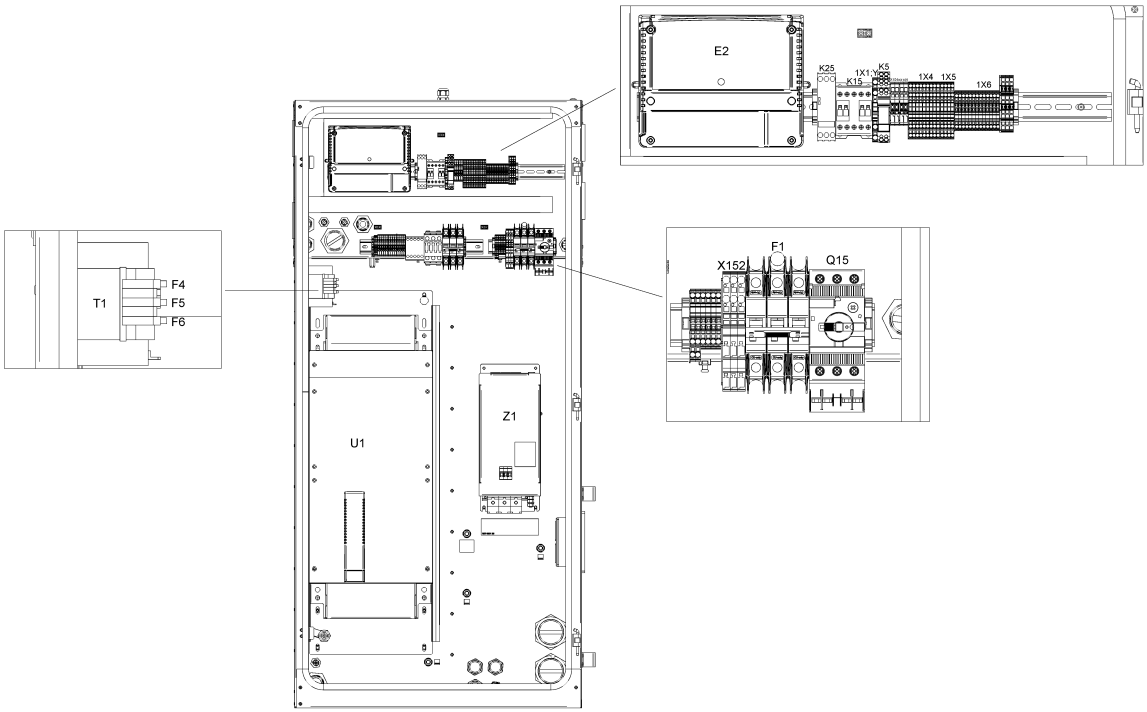

21.24 - Cubicle components GA 110 VSD+ - (200V-380V-460V/60Hz - IEC, 230V-460V-575V/60Hz - UL-cUL, 200V-400V-500V/50Hz - IEC) - Pack (12/12/2018 - 04/02/2020)

((((CAPPRM:AS1210 , CAPPRM:CE , CAPPRM:MHLW , CAPPRM:MOM) + MOVOL:400V , CAPPRM:CE + COOL:AIR + MOVOL:500V) + FREQ:50HZ , ((MOVOL:380V , MOVOL:460V) + CAPPRM:ASME , CAPPRM:MHLW + MOVOL:460V) + FREQ:60HZ) + CAPPRE:IEC , (COOL:AIR + MOVOL:575V , MOVOL:460V) + CAPPRE:ULCUL + CAPPRM:ASME + FREQ:60HZ) + IDRY:N + MODEL:GA110VP_16

Ref	Part Number	Qty	Name	Validity	EL
	1088 0039 02	1	PLATE	**(12/12/2018 - 24/02/2019)** ((((CAPPRM:AS1210 , CAPPRM:CE , CAPPRM:MHLW , CAPPRM:MOM) + MOVOL:400V , CAPPRM:CE + COOL:AIR + MOVOL:500V) + FREQ:50HZ , ((MOVOL:380V , MOVOL:460V) + CAPPRM:ASME , CAPPRM:MHLW + MOVOL:460V) + FREQ:60HZ , CAPPRM:MHLW + COOL:AIR + MOVOL:200V) + CAPPRE:IEC , ((MOVOL:230V , MOVOL:575V) + COOL:AIR , MOVOL:460V) + CAPPRE:ULCUL + CAPPRM:ASME + FREQ:60HZ) **(25/02/2019 - 04/02/2020)** ((((CAPPRM:AS1210 , CAPPRM:CE , CAPPRM:MHLW , CAPPRM:MOM) + MOVOL:400V , CAPPRM:CE + MOVOL:500V , CAPPRM:MHLW + MOVOL:200V) + FREQ:50HZ , ((MOVOL:200V , MOVOL:460V) + CAPPRM:MHLW , (MOVOL:380V , MOVOL:460V) + CAPPRM:ASME) + FREQ:60HZ) + CAPPRE:IEC , (MOVOL:230V , MOVOL:460V , MOVOL:575V) + CAPPRE:ULCUL + CAPPRM:ASME + FREQ:60HZ) + COOL:AIR **(05/02/2020 - 30/12/2027)** (CAPPRE:IEC + CAPPRM:MHLW + MOVOL:200V , CAPPRE:ULCUL + CAPPRM:ASME + FREQ:60HZ + MOVOL:230V) + COOL:AIR	X104a
	1088 0039 07	2	TERMINAL	**(12/12/2018 - 24/02/2019)** ((((CAPPRM:AS1210 , CAPPRM:CE , CAPPRM:MHLW , CAPPRM:MOM) + MOVOL:400V , CAPPRM:CE + COOL:AIR + MOVOL:500V) + FREQ:50HZ , ((MOVOL:380V , MOVOL:460V) + CAPPRM:ASME , CAPPRM:MHLW + MOVOL:460V) + FREQ:60HZ , CAPPRM:MHLW + COOL:AIR + MOVOL:200V) + CAPPRE:IEC , ((MOVOL:230V , MOVOL:575V) + COOL:AIR , MOVOL:460V) + CAPPRE:ULCUL + CAPPRM:ASME + FREQ:60HZ) **(25/02/2019 - 04/02/2020)** ((((CAPPRM:AS1210 , CAPPRM:CE , CAPPRM:MHLW , CAPPRM:MOM) + MOVOL:400V , CAPPRM:CE + MOVOL:500V , CAPPRM:MHLW + MOVOL:200V) + FREQ:50HZ , ((MOVOL:200V , MOVOL:460V) + CAPPRM:MHLW , (MOVOL:380V , MOVOL:460V) + CAPPRM:ASME) + FREQ:60HZ) + CAPPRE:IEC , (MOVOL:230V , MOVOL:460V , MOVOL:575V) + CAPPRE:ULCUL + CAPPRM:ASME + FREQ:60HZ) + COOL:AIR **(05/02/2020 - 30/12/2027)** (CAPPRE:IEC + CAPPRM:MHLW + MOVOL:200V , CAPPRE:ULCUL + CAPPRM:ASME + FREQ:60HZ + MOVOL:230V) + COOL:AIR	X105

Legend:

CAPPRE:IEC - Component approval electrical:IEC
CAPPRE:ULCUL - Component approval electrical:UL/cUL
CAPPRM:AS1210 - Component approval mechanical:AS1210
CAPPRM:ASME - Component approval mechanical:ASME
CAPPRM:CE - Component approval mechanical:CE
CAPPRM:MHLW - Component approval mechanical:MHLW
CAPPRM:MOM - Component approval mechanical:MOM
COOL:AIR - Cooling:Air cooled
FREQ:50HZ - Frequency:50 Hz
FREQ:60HZ - Frequency:60 Hz
IDRY:N - Integrated dryer:No
MODEL:GA110VP_16 - Model:GA 110VSD+
MOVOL:200V - Supply voltage:200 V
MOVOL:230V - Supply voltage:230 V
MOVOL:380V - Supply voltage:380 V
MOVOL:400V - Supply voltage:400 V
MOVOL:460V - Supply voltage:460 V
MOVOL:500V - Supply voltage:500 V
MOVOL:575V - Supply voltage:575 V

21.24 - Cubicle components GA 110 VSD+ - (200V-380V-460V/60Hz - IEC, 230V-460V-575V/60Hz - UL-cUL, 200V-400V-500V/50Hz - IEC) - Pack (12/12/2018 - 04/02/2020)

((((CAPPRM:AS1210 , CAPPRM:CE , CAPPRM:MHLW , CAPPRM:MOM) + MOVOL:400V , CAPPRM:CE + COOL:AIR + MOVOL:500V) + FREQ:50HZ , ((MOVOL:380V , MOVOL:460V) + CAPPRM:ASME , CAPPRM:MHLW + MOVOL:460V) + FREQ:60HZ) + CAPPRE:IEC , (COOL:AIR + MOVOL:575V , MOVOL:460V) + CAPPRE:ULCUL + CAPPRM:ASME + FREQ:60HZ) + IDRY:N + MODEL:GA110VP_16

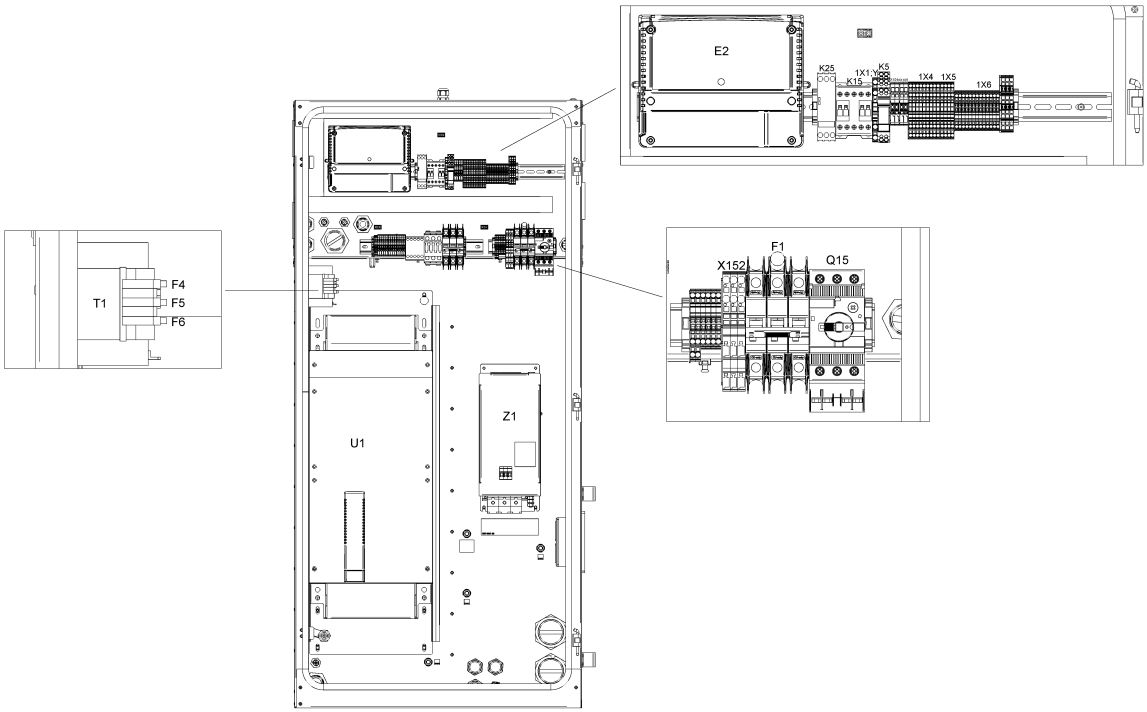

21.24 - Cubicle components GA 110 VSD+ - (200V-380V-460V/60Hz - IEC, 230V-460V-575V/60Hz - UL-cUL, 200V-400V-500V/50Hz - IEC) - Pack (12/12/2018 - 04/02/2020)

((((CAPPRM:AS1210 , CAPPRM:CE , CAPPRM:MHLW , CAPPRM:MOM) + MOVOL:400V , CAPPRM:CE + COOL:AIR + MOVOL:500V) + FREQ:50HZ , ((MOVOL:380V , MOVOL:460V) + CAPPRM:ASME , CAPPRM:MHLW + MOVOL:460V) + FREQ:60HZ) + CAPPRE:IEC , (COOL:AIR + MOVOL:575V , MOVOL:460V) + CAPPRE:ULCUL + CAPPRM:ASME + FREQ:60HZ) + IDRY:N + MODEL:GA110VP_16

Ref	Part Number	Qty	Name	Validity	EL
	1088 0039 05	1	PLATE	**(12/12/2018 - 24/02/2019)** ((((CAPPRM:AS1210 , CAPPRM:CE , CAPPRM:MHLW , CAPPRM:MOM) + MOVOL:400V , CAPPRM:CE + COOL:AIR + MOVOL:500V) + FREQ:50HZ , ((MOVOL:380V , MOVOL:460V) + CAPPRM:ASME , CAPPRM:MHLW + MOVOL:460V) + FREQ:60HZ , CAPPRM:MHLW + COOL:AIR + MOVOL:200V) + CAPPRE:IEC , ((MOVOL:230V , MOVOL:575V) + COOL:AIR , MOVOL:460V) + CAPPRE:ULCUL + CAPPRM:ASME + FREQ:60HZ) **(25/02/2019 - 04/02/2020)** ((((CAPPRM:AS1210 , CAPPRM:CE , CAPPRM:MHLW , CAPPRM:MOM) + MOVOL:400V , CAPPRM:CE + MOVOL:500V , CAPPRM:MHLW + MOVOL:200V) + FREQ:50HZ , ((MOVOL:200V , MOVOL:460V) + CAPPRM:MHLW , (MOVOL:380V , MOVOL:460V) + CAPPRM:ASME) + FREQ:60HZ) + CAPPRE:IEC , (MOVOL:230V , MOVOL:460V , MOVOL:575V) + CAPPRE:ULCUL + CAPPRM:ASME + FREQ:60HZ) + COOL:AIR **(05/02/2020 - 30/12/2027)** (CAPPRE:IEC + CAPPRM:MHLW + MOVOL:200V , CAPPRE:ULCUL + CAPPRM:ASME + FREQ:60HZ + MOVOL:230V) + COOL:AIR	X105
	1088 0039 34	13	TERMINAL	**(12/12/2018 - 24/02/2019)** ((((CAPPRM:AS1210 , CAPPRM:CE , CAPPRM:MHLW , CAPPRM:MOM) + MOVOL:400V , CAPPRM:CE + COOL:AIR + MOVOL:500V) + FREQ:50HZ , ((MOVOL:380V , MOVOL:460V) + CAPPRM:ASME , CAPPRM:MHLW + MOVOL:460V) + FREQ:60HZ , CAPPRM:MHLW + COOL:AIR + MOVOL:200V) + CAPPRE:IEC , ((MOVOL:230V , MOVOL:575V) + COOL:AIR , MOVOL:460V) + CAPPRE:ULCUL + CAPPRM:ASME + FREQ:60HZ) **(25/02/2019 - 04/02/2020)** ((((CAPPRM:AS1210 , CAPPRM:CE , CAPPRM:MHLW , CAPPRM:MOM) + MOVOL:400V , CAPPRM:CE + MOVOL:500V , CAPPRM:MHLW + MOVOL:200V) + FREQ:50HZ , ((MOVOL:200V , MOVOL:460V) + CAPPRM:MHLW , (MOVOL:380V , MOVOL:460V) + CAPPRM:ASME) + FREQ:60HZ) + CAPPRE:IEC , (MOVOL:230V , MOVOL:460V , MOVOL:575V) + CAPPRE:ULCUL + CAPPRM:ASME + FREQ:60HZ) + COOL:AIR **(05/02/2020 - 30/12/2027)** (CAPPRE:IEC + CAPPRM:MHLW + MOVOL:200V , CAPPRE:ULCUL + CAPPRM:ASME + FREQ:60HZ + MOVOL:230V) + COOL:AIR	1X6

Legend:

CAPPRE:IEC - Component approval electrical:IEC
CAPPRE:ULCUL - Component approval electrical:UL/cUL
CAPPRM:AS1210 - Component approval mechanical:AS1210
CAPPRM:ASME - Component approval mechanical:ASME
CAPPRM:CE - Component approval mechanical:CE
CAPPRM:MHLW - Component approval mechanical:MHLW
CAPPRM:MOM - Component approval mechanical:MOM
COOL:AIR - Cooling:Air cooled
FREQ:50HZ - Frequency:50 Hz
FREQ:60HZ - Frequency:60 Hz
IDRY:N - Integrated dryer:No
MODEL:GA110VP_16 - Model:GA 110VSD+
MOVOL:200V - Supply voltage:200 V
MOVOL:230V - Supply voltage:230 V
MOVOL:380V - Supply voltage:380 V
MOVOL:400V - Supply voltage:400 V
MOVOL:460V - Supply voltage:460 V
MOVOL:500V - Supply voltage:500 V
MOVOL:575V - Supply voltage:575 V

21.24 - Cubicle components GA 110 VSD+ - (200V-380V-460V/60Hz - IEC, 230V-460V-575V/60Hz - UL-cUL, 200V-400V-500V/50Hz - IEC) - Pack (12/12/2018 - 04/02/2020)

((((CAPPRM:AS1210 , CAPPRM:CE , CAPPRM:MHLW , CAPPRM:MOM) + MOVOL:400V , CAPPRM:CE + COOL:AIR + MOVOL:500V) + FREQ:50HZ , ((MOVOL:380V , MOVOL:460V) + CAPPRM:ASME , CAPPRM:MHLW + MOVOL:460V) + FREQ:60HZ) + CAPPRE:IEC , (COOL:AIR + MOVOL:575V , MOVOL:460V) + CAPPRE:ULCUL + CAPPRM:ASME + FREQ:60HZ) + IDRY:N + MODEL:GA110VP_16

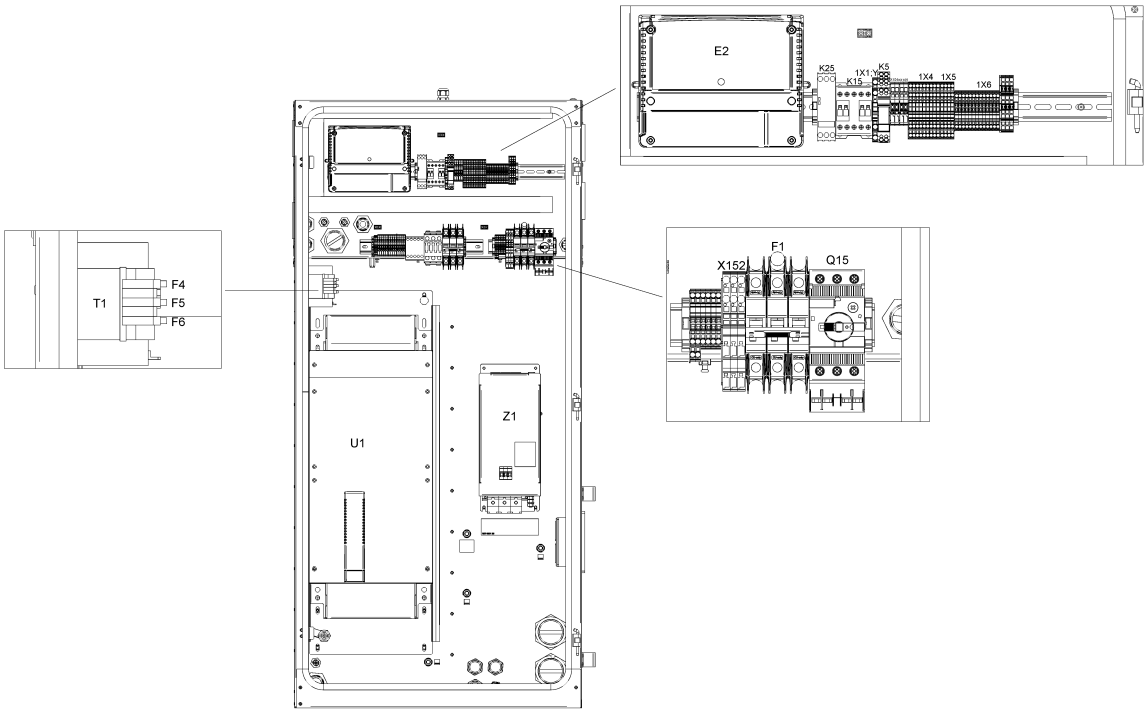

21.24 - Cubicle components GA 110 VSD+ - (200V-380V-460V/60Hz - IEC, 230V-460V-575V/60Hz - UL-cUL, 200V-400V-500V/50Hz - IEC) - Pack (12/12/2018 - 04/02/2020)

((((CAPPRM:AS1210 , CAPPRM:CE , CAPPRM:MHLW , CAPPRM:MOM) + MOVOL:400V , CAPPRM:CE + COOL:AIR + MOVOL:500V) + FREQ:50HZ , ((MOVOL:380V , MOVOL:460V) + CAPPRM:ASME , CAPPRM:MHLW + MOVOL:460V) + FREQ:60HZ) + CAPPRE:IEC , (COOL:AIR + MOVOL:575V , MOVOL:460V) + CAPPRE:ULCUL + CAPPRM:ASME + FREQ:60HZ) + IDRY:N + MODEL:GA110VP_16

Ref	Part Number	Qty	Name	Validity	EL
	1088 0037 69	3	CONNECTOR	**(12/12/2018 - 24/02/2019)** ((((CAPPRM:AS1210 , CAPPRM:CE , CAPPRM:MHLW , CAPPRM:MOM) + MOVOL:400V , CAPPRM:CE + COOL:AIR + MOVOL:500V) + FREQ:50HZ , ((MOVOL:380V , MOVOL:460V) + CAPPRM:ASME , CAPPRM:MHLW + MOVOL:460V) + FREQ:60HZ , CAPPRM:MHLW + COOL:AIR + MOVOL:200V) + CAPPRE:IEC , ((MOVOL:230V , MOVOL:575V) + COOL:AIR , MOVOL:460V) + CAPPRE:ULCUL + CAPPRM:ASME + FREQ:60HZ) **(25/02/2019 - 04/02/2020)** ((((CAPPRM:AS1210 , CAPPRM:CE , CAPPRM:MHLW , CAPPRM:MOM) + MOVOL:400V , CAPPRM:CE + MOVOL:500V , CAPPRM:MHLW + MOVOL:200V) + FREQ:50HZ , ((MOVOL:200V , MOVOL:460V) + CAPPRM:MHLW , (MOVOL:380V , MOVOL:460V) + CAPPRM:ASME) + FREQ:60HZ) + CAPPRE:IEC , (MOVOL:230V , MOVOL:460V , MOVOL:575V) + CAPPRE:ULCUL + CAPPRM:ASME + FREQ:60HZ) + COOL:AIR **(05/02/2020 - 30/12/2027)** (CAPPRE:IEC + CAPPRM:MHLW + MOVOL:200V , CAPPRE:ULCUL + CAPPRM:ASME + FREQ:60HZ + MOVOL:230V) + COOL:AIR	1X7
	1088 0039 35	1	PLATE	**(12/12/2018 - 24/02/2019)** ((((CAPPRM:AS1210 , CAPPRM:CE , CAPPRM:MHLW , CAPPRM:MOM) + MOVOL:400V , CAPPRM:CE + COOL:AIR + MOVOL:500V) + FREQ:50HZ , ((MOVOL:380V , MOVOL:460V) + CAPPRM:ASME , CAPPRM:MHLW + MOVOL:460V) + FREQ:60HZ , CAPPRM:MHLW + COOL:AIR + MOVOL:200V) + CAPPRE:IEC , ((MOVOL:230V , MOVOL:575V) + COOL:AIR , MOVOL:460V) + CAPPRE:ULCUL + CAPPRM:ASME + FREQ:60HZ) **(25/02/2019 - 04/02/2020)** ((((CAPPRM:AS1210 , CAPPRM:CE , CAPPRM:MHLW , CAPPRM:MOM) + MOVOL:400V , CAPPRM:CE + MOVOL:500V , CAPPRM:MHLW + MOVOL:200V) + FREQ:50HZ , ((MOVOL:200V , MOVOL:460V) + CAPPRM:MHLW , (MOVOL:380V , MOVOL:460V) + CAPPRM:ASME) + FREQ:60HZ) + CAPPRE:IEC , (MOVOL:230V , MOVOL:460V , MOVOL:575V) + CAPPRE:ULCUL + CAPPRM:ASME + FREQ:60HZ) + COOL:AIR **(05/02/2020 - 30/12/2027)** (CAPPRE:IEC + CAPPRM:MHLW + MOVOL:200V , CAPPRE:ULCUL + CAPPRM:ASME + FREQ:60HZ + MOVOL:230V) + COOL:AIR	1X6

Legend:

CAPPRE:IEC - Component approval electrical:IEC
CAPPRE:ULCUL - Component approval electrical:UL/cUL
CAPPRM:AS1210 - Component approval mechanical:AS1210
CAPPRM:ASME - Component approval mechanical:ASME
CAPPRM:CE - Component approval mechanical:CE
CAPPRM:MHLW - Component approval mechanical:MHLW
CAPPRM:MOM - Component approval mechanical:MOM
COOL:AIR - Cooling:Air cooled
FREQ:50HZ - Frequency:50 Hz
FREQ:60HZ - Frequency:60 Hz
IDRY:N - Integrated dryer:No
MODEL:GA110VP_16 - Model:GA 110VSD+
MOVOL:200V - Supply voltage:200 V
MOVOL:230V - Supply voltage:230 V
MOVOL:380V - Supply voltage:380 V
MOVOL:400V - Supply voltage:400 V
MOVOL:460V - Supply voltage:460 V
MOVOL:500V - Supply voltage:500 V
MOVOL:575V - Supply voltage:575 V

21.24 - Cubicle components GA 110 VSD+ - (200V-380V-460V/60Hz - IEC, 230V-460V-575V/60Hz - UL-cUL, 200V-400V-500V/50Hz - IEC) - Pack (12/12/2018 - 04/02/2020)

((((CAPPRM:AS1210 , CAPPRM:CE , CAPPRM:MHLW , CAPPRM:MOM) + MOVOL:400V , CAPPRM:CE + COOL:AIR + MOVOL:500V) + FREQ:50HZ , ((MOVOL:380V , MOVOL:460V) + CAPPRM:ASME , CAPPRM:MHLW + MOVOL:460V) + FREQ:60HZ) + CAPPRE:IEC , (COOL:AIR + MOVOL:575V , MOVOL:460V) + CAPPRE:ULCUL + CAPPRM:ASME + FREQ:60HZ) + IDRY:N + MODEL:GA110VP_16

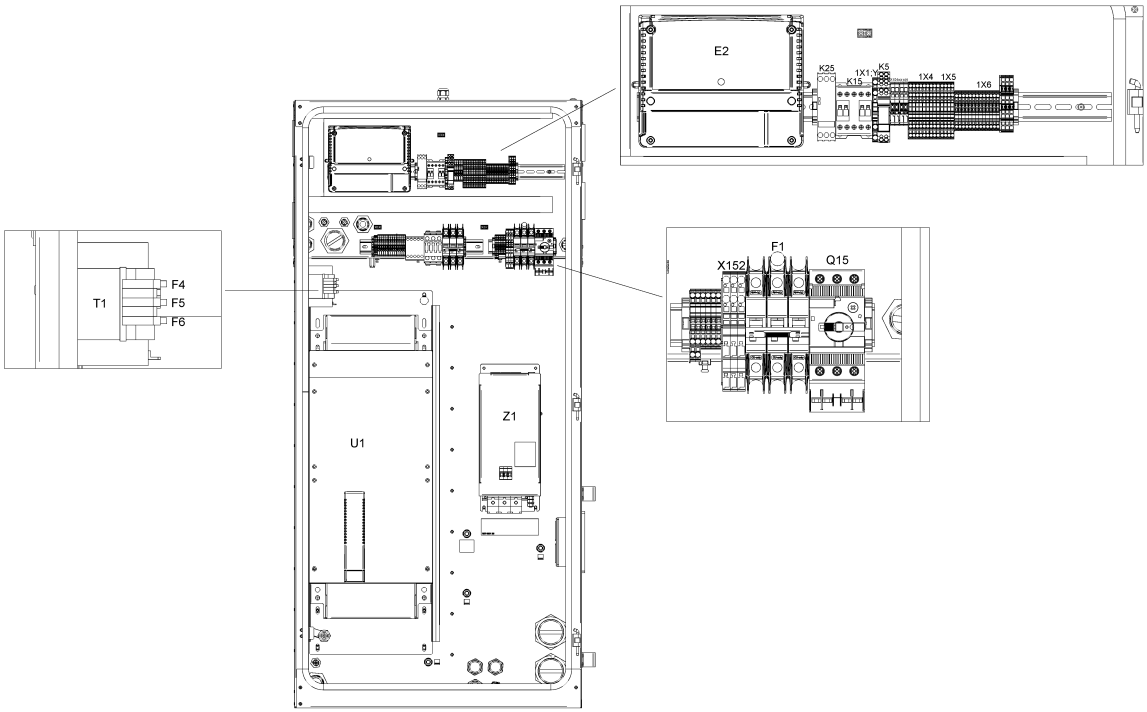

21.24 - Cubicle components GA 110 VSD+ - (200V-380V-460V/60Hz - IEC, 230V-460V-575V/60Hz - UL-cUL, 200V-400V-500V/50Hz - IEC) - Pack (12/12/2018 - 04/02/2020)

((((CAPPRM:AS1210 , CAPPRM:CE , CAPPRM:MHLW , CAPPRM:MOM) + MOVOL:400V , CAPPRM:CE + COOL:AIR + MOVOL:500V) + FREQ:50HZ , ((MOVOL:380V , MOVOL:460V) + CAPPRM:ASME , CAPPRM:MHLW + MOVOL:460V) + FREQ:60HZ) + CAPPRE:IEC , (COOL:AIR + MOVOL:575V , MOVOL:460V) + CAPPRE:ULCUL + CAPPRM:ASME + FREQ:60HZ) + IDRY:N + MODEL:GA110VP_16

Ref	Part Number	Qty	Name	Validity	EL
	1088 0040 37	1	END PLATE	**(12/12/2018 - 24/02/2019)** ((((CAPPRM:AS1210 , CAPPRM:CE , CAPPRM:MHLW , CAPPRM:MOM) + MOVOL:400V , CAPPRM:CE + COOL:AIR + MOVOL:500V) + FREQ:50HZ , ((MOVOL:380V , MOVOL:460V) + CAPPRM:ASME , CAPPRM:MHLW + MOVOL:460V) + FREQ:60HZ , CAPPRM:MHLW + COOL:AIR + MOVOL:200V) + CAPPRE:IEC , ((MOVOL:230V , MOVOL:575V) + COOL:AIR , MOVOL:460V) + CAPPRE:ULCUL + CAPPRM:ASME + FREQ:60HZ) **(25/02/2019 - 04/02/2020)** ((((CAPPRM:AS1210 , CAPPRM:CE , CAPPRM:MHLW , CAPPRM:MOM) + MOVOL:400V , CAPPRM:CE + MOVOL:500V , CAPPRM:MHLW + MOVOL:200V) + FREQ:50HZ , ((MOVOL:200V , MOVOL:460V) + CAPPRM:MHLW , (MOVOL:380V , MOVOL:460V) + CAPPRM:ASME) + FREQ:60HZ) + CAPPRE:IEC , (MOVOL:230V , MOVOL:460V , MOVOL:575V) + CAPPRE:ULCUL + CAPPRM:ASME + FREQ:60HZ) + COOL:AIR **(05/02/2020 - 30/12/2027)** (CAPPRE:IEC + CAPPRM:MHLW + MOVOL:200V , CAPPRE:ULCUL + CAPPRM:ASME + FREQ:60HZ + MOVOL:230V) + COOL:AIR	1X7
	1088 0039 36	9	TERMINAL	**(12/12/2018 - 24/02/2019)** ((((CAPPRM:AS1210 , CAPPRM:CE , CAPPRM:MHLW , CAPPRM:MOM) + MOVOL:400V , CAPPRM:CE + COOL:AIR + MOVOL:500V) + FREQ:50HZ , ((MOVOL:380V , MOVOL:460V) + CAPPRM:ASME , CAPPRM:MHLW + MOVOL:460V) + FREQ:60HZ , CAPPRM:MHLW + COOL:AIR + MOVOL:200V) + CAPPRE:IEC , ((MOVOL:230V , MOVOL:575V) + COOL:AIR , MOVOL:460V) + CAPPRE:ULCUL + CAPPRM:ASME + FREQ:60HZ) **(25/02/2019 - 04/02/2020)** ((((CAPPRM:AS1210 , CAPPRM:CE , CAPPRM:MHLW , CAPPRM:MOM) + MOVOL:400V , CAPPRM:CE + MOVOL:500V , CAPPRM:MHLW + MOVOL:200V) + FREQ:50HZ , ((MOVOL:200V , MOVOL:460V) + CAPPRM:MHLW , (MOVOL:380V , MOVOL:460V) + CAPPRM:ASME) + FREQ:60HZ) + CAPPRE:IEC , (MOVOL:230V , MOVOL:460V , MOVOL:575V) + CAPPRE:ULCUL + CAPPRM:ASME + FREQ:60HZ) + COOL:AIR **(05/02/2020 - 30/12/2027)** (CAPPRE:IEC + CAPPRM:MHLW + MOVOL:200V , CAPPRE:ULCUL + CAPPRM:ASME + FREQ:60HZ + MOVOL:230V) + COOL:AIR	1X4

Legend:

CAPPRE:IEC - Component approval electrical:IEC
CAPPRE:ULCUL - Component approval electrical:UL/cUL
CAPPRM:AS1210 - Component approval mechanical:AS1210
CAPPRM:ASME - Component approval mechanical:ASME
CAPPRM:CE - Component approval mechanical:CE
CAPPRM:MHLW - Component approval mechanical:MHLW
CAPPRM:MOM - Component approval mechanical:MOM
COOL:AIR - Cooling:Air cooled
FREQ:50HZ - Frequency:50 Hz
FREQ:60HZ - Frequency:60 Hz
IDRY:N - Integrated dryer:No
MODEL:GA110VP_16 - Model:GA 110VSD+
MOVOL:200V - Supply voltage:200 V
MOVOL:230V - Supply voltage:230 V
MOVOL:380V - Supply voltage:380 V
MOVOL:400V - Supply voltage:400 V
MOVOL:460V - Supply voltage:460 V
MOVOL:500V - Supply voltage:500 V
MOVOL:575V - Supply voltage:575 V

21.24 - Cubicle components GA 110 VSD+ - (200V-380V-460V/60Hz - IEC, 230V-460V-575V/60Hz - UL-cUL, 200V-400V-500V/50Hz - IEC) - Pack (12/12/2018 - 04/02/2020)

((((CAPPRM:AS1210 , CAPPRM:CE , CAPPRM:MHLW , CAPPRM:MOM) + MOVOL:400V , CAPPRM:CE + COOL:AIR + MOVOL:500V) + FREQ:50HZ , ((MOVOL:380V , MOVOL:460V) + CAPPRM:ASME , CAPPRM:MHLW + MOVOL:460V) + FREQ:60HZ) + CAPPRE:IEC , (COOL:AIR + MOVOL:575V , MOVOL:460V) + CAPPRE:ULCUL + CAPPRM:ASME + FREQ:60HZ) + IDRY:N + MODEL:GA110VP_16

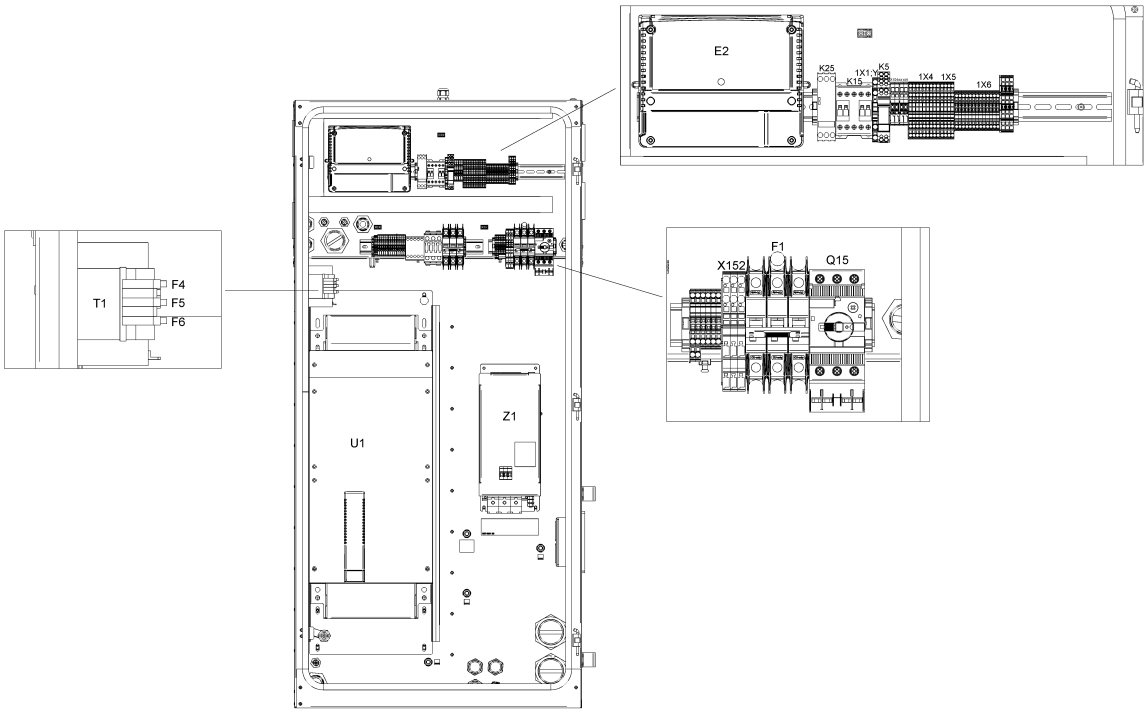

21.24 - Cubicle components GA 110 VSD+ - (200V-380V-460V/60Hz - IEC, 230V-460V-575V/60Hz - UL-cUL, 200V-400V-500V/50Hz - IEC) - Pack (12/12/2018 - 04/02/2020)

((((CAPPRM:AS1210 , CAPPRM:CE , CAPPRM:MHLW , CAPPRM:MOM) + MOVOL:400V , CAPPRM:CE + COOL:AIR + MOVOL:500V) + FREQ:50HZ , ((MOVOL:380V , MOVOL:460V) + CAPPRM:ASME , CAPPRM:MHLW + MOVOL:460V) + FREQ:60HZ) + CAPPRE:IEC , (COOL:AIR + MOVOL:575V , MOVOL:460V) + CAPPRE:ULCUL + CAPPRM:ASME + FREQ:60HZ) + IDRY:N + MODEL:GA110VP_16

Ref	Part Number	Qty	Name	Validity	EL
	1088 0039 36	4	TERMINAL	**(12/12/2018 - 24/02/2019)** ((((CAPPRM:AS1210 , CAPPRM:CE , CAPPRM:MHLW , CAPPRM:MOM) + MOVOL:400V , CAPPRM:CE + COOL:AIR + MOVOL:500V) + FREQ:50HZ , ((MOVOL:380V , MOVOL:460V) + CAPPRM:ASME , CAPPRM:MHLW + MOVOL:460V) + FREQ:60HZ , CAPPRM:MHLW + COOL:AIR + MOVOL:200V) + CAPPRE:IEC , ((MOVOL:230V , MOVOL:575V) + COOL:AIR , MOVOL:460V) + CAPPRE:ULCUL + CAPPRM:ASME + FREQ:60HZ) **(25/02/2019 - 04/02/2020)** ((((CAPPRM:AS1210 , CAPPRM:CE , CAPPRM:MHLW , CAPPRM:MOM) + MOVOL:400V , CAPPRM:CE + MOVOL:500V , CAPPRM:MHLW + MOVOL:200V) + FREQ:50HZ , ((MOVOL:200V , MOVOL:460V) + CAPPRM:MHLW , (MOVOL:380V , MOVOL:460V) + CAPPRM:ASME) + FREQ:60HZ) + CAPPRE:IEC , (MOVOL:230V , MOVOL:460V , MOVOL:575V) + CAPPRE:ULCUL + CAPPRM:ASME + FREQ:60HZ) + COOL:AIR **(05/02/2020 - 30/12/2027)** (CAPPRE:IEC + CAPPRM:MHLW + MOVOL:200V , CAPPRE:ULCUL + CAPPRM:ASME + FREQ:60HZ + MOVOL:230V) + COOL:AIR	1X6
	1088 0039 37	1	END PLATE	**(12/12/2018 - 24/02/2019)** ((((CAPPRM:AS1210 , CAPPRM:CE , CAPPRM:MHLW , CAPPRM:MOM) + MOVOL:400V , CAPPRM:CE + COOL:AIR + MOVOL:500V) + FREQ:50HZ , ((MOVOL:380V , MOVOL:460V) + CAPPRM:ASME , CAPPRM:MHLW + MOVOL:460V) + FREQ:60HZ , CAPPRM:MHLW + COOL:AIR + MOVOL:200V) + CAPPRE:IEC , ((MOVOL:230V , MOVOL:575V) + COOL:AIR , MOVOL:460V) + CAPPRE:ULCUL + CAPPRM:ASME + FREQ:60HZ) **(25/02/2019 - 04/02/2020)** ((((CAPPRM:AS1210 , CAPPRM:CE , CAPPRM:MHLW , CAPPRM:MOM) + MOVOL:400V , CAPPRM:CE + MOVOL:500V , CAPPRM:MHLW + MOVOL:200V) + FREQ:50HZ , ((MOVOL:200V , MOVOL:460V) + CAPPRM:MHLW , (MOVOL:380V , MOVOL:460V) + CAPPRM:ASME) + FREQ:60HZ) + CAPPRE:IEC , (MOVOL:230V , MOVOL:460V , MOVOL:575V) + CAPPRE:ULCUL + CAPPRM:ASME + FREQ:60HZ) + COOL:AIR **(05/02/2020 - 30/12/2027)** (CAPPRE:IEC + CAPPRM:MHLW + MOVOL:200V , CAPPRE:ULCUL + CAPPRM:ASME + FREQ:60HZ + MOVOL:230V) + COOL:AIR	1X4

Legend:

CAPPRE:IEC - Component approval electrical:IEC
CAPPRE:ULCUL - Component approval electrical:UL/cUL
CAPPRM:AS1210 - Component approval mechanical:AS1210
CAPPRM:ASME - Component approval mechanical:ASME
CAPPRM:CE - Component approval mechanical:CE
CAPPRM:MHLW - Component approval mechanical:MHLW
CAPPRM:MOM - Component approval mechanical:MOM
COOL:AIR - Cooling:Air cooled
FREQ:50HZ - Frequency:50 Hz
FREQ:60HZ - Frequency:60 Hz
IDRY:N - Integrated dryer:No
MODEL:GA110VP_16 - Model:GA 110VSD+
MOVOL:200V - Supply voltage:200 V
MOVOL:230V - Supply voltage:230 V
MOVOL:380V - Supply voltage:380 V
MOVOL:400V - Supply voltage:400 V
MOVOL:460V - Supply voltage:460 V
MOVOL:500V - Supply voltage:500 V
MOVOL:575V - Supply voltage:575 V

21.24 - Cubicle components GA 110 VSD+ - (200V-380V-460V/60Hz - IEC, 230V-460V-575V/60Hz - UL-cUL, 200V-400V-500V/50Hz - IEC) - Pack (12/12/2018 - 04/02/2020)

((((CAPPRM:AS1210 , CAPPRM:CE , CAPPRM:MHLW , CAPPRM:MOM) + MOVOL:400V , CAPPRM:CE + COOL:AIR + MOVOL:500V) + FREQ:50HZ , ((MOVOL:380V , MOVOL:460V) + CAPPRM:ASME , CAPPRM:MHLW + MOVOL:460V) + FREQ:60HZ) + CAPPRE:IEC , (COOL:AIR + MOVOL:575V , MOVOL:460V) + CAPPRE:ULCUL + CAPPRM:ASME + FREQ:60HZ) + IDRY:N + MODEL:GA110VP_16

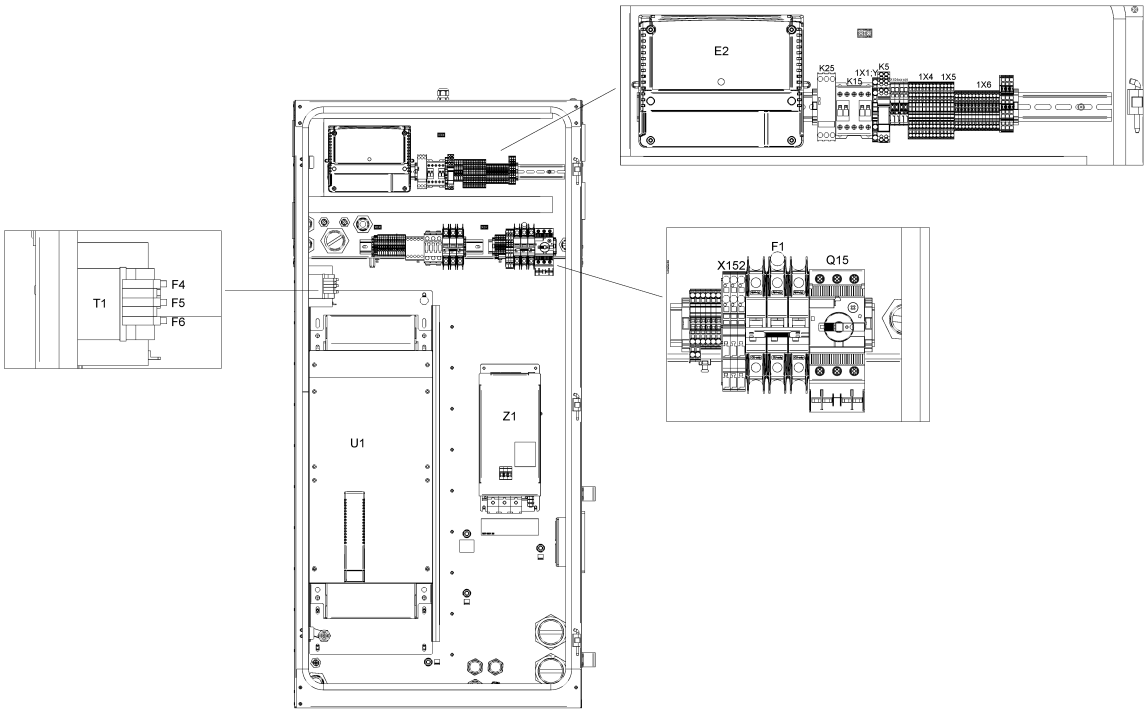

21.24 - Cubicle components GA 110 VSD+ - (200V-380V-460V/60Hz - IEC, 230V-460V-575V/60Hz - UL-cUL, 200V-400V-500V/50Hz - IEC) - Pack (12/12/2018 - 04/02/2020)

((((CAPPRM:AS1210 , CAPPRM:CE , CAPPRM:MHLW , CAPPRM:MOM) + MOVOL:400V , CAPPRM:CE + COOL:AIR + MOVOL:500V) + FREQ:50HZ , ((MOVOL:380V , MOVOL:460V) + CAPPRM:ASME , CAPPRM:MHLW + MOVOL:460V) + FREQ:60HZ) + CAPPRE:IEC , (COOL:AIR + MOVOL:575V , MOVOL:460V) + CAPPRE:ULCUL + CAPPRM:ASME + FREQ:60HZ) + IDRY:N + MODEL:GA110VP_16

Ref	Part Number	Qty	Name	Validity	EL
	1088 0039 37	1	END PLATE	**(12/12/2018 - 24/02/2019)** ((((CAPPRM:AS1210 , CAPPRM:CE , CAPPRM:MHLW , CAPPRM:MOM) + MOVOL:400V , CAPPRM:CE + COOL:AIR + MOVOL:500V) + FREQ:50HZ , ((MOVOL:380V , MOVOL:460V) + CAPPRM:ASME , CAPPRM:MHLW + MOVOL:460V) + FREQ:60HZ , CAPPRM:MHLW + COOL:AIR + MOVOL:200V) + CAPPRE:IEC , ((MOVOL:230V , MOVOL:575V) + COOL:AIR , MOVOL:460V) + CAPPRE:ULCUL + CAPPRM:ASME + FREQ:60HZ) **(25/02/2019 - 04/02/2020)** ((((CAPPRM:AS1210 , CAPPRM:CE , CAPPRM:MHLW , CAPPRM:MOM) + MOVOL:400V , CAPPRM:CE + MOVOL:500V , CAPPRM:MHLW + MOVOL:200V) + FREQ:50HZ , ((MOVOL:200V , MOVOL:460V) + CAPPRM:MHLW , (MOVOL:380V , MOVOL:460V) + CAPPRM:ASME) + FREQ:60HZ) + CAPPRE:IEC , (MOVOL:230V , MOVOL:460V , MOVOL:575V) + CAPPRE:ULCUL + CAPPRM:ASME + FREQ:60HZ) + COOL:AIR **(05/02/2020 - 30/12/2027)** (CAPPRE:IEC + CAPPRM:MHLW + MOVOL:200V , CAPPRE:ULCUL + CAPPRM:ASME + FREQ:60HZ + MOVOL:230V) + COOL:AIR	1X6
	1088 0039 37	1	END PLATE	**(12/12/2018 - 24/02/2019)** ((((CAPPRM:AS1210 , CAPPRM:CE , CAPPRM:MHLW , CAPPRM:MOM) + MOVOL:400V , CAPPRM:CE + COOL:AIR + MOVOL:500V) + FREQ:50HZ , ((MOVOL:380V , MOVOL:460V) + CAPPRM:ASME , CAPPRM:MHLW + MOVOL:460V) + FREQ:60HZ , CAPPRM:MHLW + COOL:AIR + MOVOL:200V) + CAPPRE:IEC , ((MOVOL:230V , MOVOL:575V) + COOL:AIR , MOVOL:460V) + CAPPRE:ULCUL + CAPPRM:ASME + FREQ:60HZ) **(25/02/2019 - 04/02/2020)** ((((CAPPRM:AS1210 , CAPPRM:CE , CAPPRM:MHLW , CAPPRM:MOM) + MOVOL:400V , CAPPRM:CE + MOVOL:500V , CAPPRM:MHLW + MOVOL:200V) + FREQ:50HZ , ((MOVOL:200V , MOVOL:460V) + CAPPRM:MHLW , (MOVOL:380V , MOVOL:460V) + CAPPRM:ASME) + FREQ:60HZ) + CAPPRE:IEC , (MOVOL:230V , MOVOL:460V , MOVOL:575V) + CAPPRE:ULCUL + CAPPRM:ASME + FREQ:60HZ) + COOL:AIR **(05/02/2020 - 30/12/2027)** (CAPPRE:IEC + CAPPRM:MHLW + MOVOL:200V , CAPPRE:ULCUL + CAPPRM:ASME + FREQ:60HZ + MOVOL:230V) + COOL:AIR	1X1:Y/D

Legend:

CAPPRE:IEC - Component approval electrical:IEC
CAPPRE:ULCUL - Component approval electrical:UL/cUL
CAPPRM:AS1210 - Component approval mechanical:AS1210
CAPPRM:ASME - Component approval mechanical:ASME
CAPPRM:CE - Component approval mechanical:CE
CAPPRM:MHLW - Component approval mechanical:MHLW
CAPPRM:MOM - Component approval mechanical:MOM
COOL:AIR - Cooling:Air cooled
FREQ:50HZ - Frequency:50 Hz
FREQ:60HZ - Frequency:60 Hz
IDRY:N - Integrated dryer:No
MODEL:GA110VP_16 - Model:GA 110VSD+
MOVOL:200V - Supply voltage:200 V
MOVOL:230V - Supply voltage:230 V
MOVOL:380V - Supply voltage:380 V
MOVOL:400V - Supply voltage:400 V
MOVOL:460V - Supply voltage:460 V
MOVOL:500V - Supply voltage:500 V
MOVOL:575V - Supply voltage:575 V

21.24 - Cubicle components GA 110 VSD+ - (200V-380V-460V/60Hz - IEC, 230V-460V-575V/60Hz - UL-cUL, 200V-400V-500V/50Hz - IEC) - Pack (12/12/2018 - 04/02/2020)

((((CAPPRM:AS1210 , CAPPRM:CE , CAPPRM:MHLW , CAPPRM:MOM) + MOVOL:400V , CAPPRM:CE + COOL:AIR + MOVOL:500V) + FREQ:50HZ , ((MOVOL:380V , MOVOL:460V) + CAPPRM:ASME , CAPPRM:MHLW + MOVOL:460V) + FREQ:60HZ) + CAPPRE:IEC , (COOL:AIR + MOVOL:575V , MOVOL:460V) + CAPPRE:ULCUL + CAPPRM:ASME + FREQ:60HZ) + IDRY:N + MODEL:GA110VP_16

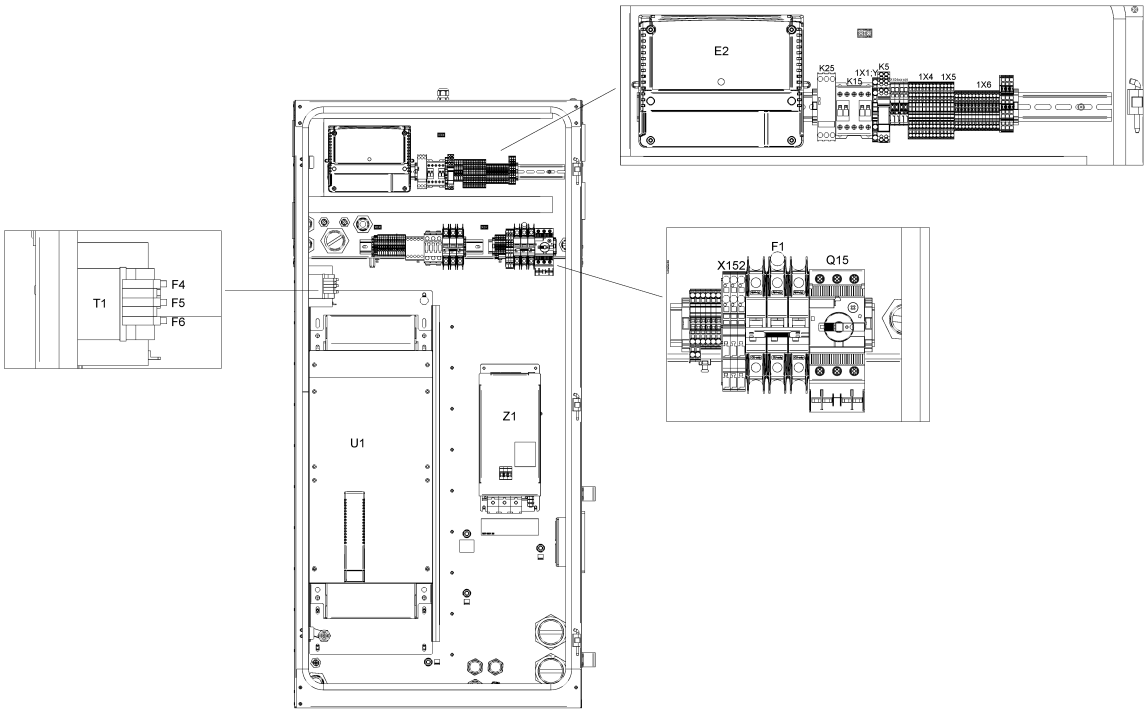

21.24 - Cubicle components GA 110 VSD+ - (200V-380V-460V/60Hz - IEC, 230V-460V-575V/60Hz - UL-cUL, 200V-400V-500V/50Hz - IEC) - Pack (12/12/2018 - 04/02/2020)

((((CAPPRM:AS1210 , CAPPRM:CE , CAPPRM:MHLW , CAPPRM:MOM) + MOVOL:400V , CAPPRM:CE + COOL:AIR + MOVOL:500V) + FREQ:50HZ , ((MOVOL:380V , MOVOL:460V) + CAPPRM:ASME , CAPPRM:MHLW + MOVOL:460V) + FREQ:60HZ) + CAPPRE:IEC , (COOL:AIR + MOVOL:575V , MOVOL:460V) + CAPPRE:ULCUL + CAPPRM:ASME + FREQ:60HZ) + IDRY:N + MODEL:GA110VP_16

Ref	Part Number	Qty	Name	Validity	EL
	1088 0037 81	1	CONNECTOR	**(12/12/2018 - 24/02/2019)** ((((CAPPRM:AS1210 , CAPPRM:CE , CAPPRM:MHLW , CAPPRM:MOM) + MOVOL:400V , CAPPRM:CE + COOL:AIR + MOVOL:500V) + FREQ:50HZ , ((MOVOL:380V , MOVOL:460V) + CAPPRM:ASME , CAPPRM:MHLW + MOVOL:460V) + FREQ:60HZ , CAPPRM:MHLW + COOL:AIR + MOVOL:200V) + CAPPRE:IEC , ((MOVOL:230V , MOVOL:575V) + COOL:AIR , MOVOL:460V) + CAPPRE:ULCUL + CAPPRM:ASME + FREQ:60HZ) **(25/02/2019 - 04/02/2020)** ((((CAPPRM:AS1210 , CAPPRM:CE , CAPPRM:MHLW , CAPPRM:MOM) + MOVOL:400V , CAPPRM:CE + MOVOL:500V , CAPPRM:MHLW + MOVOL:200V) + FREQ:50HZ , ((MOVOL:200V , MOVOL:460V) + CAPPRM:MHLW , (MOVOL:380V , MOVOL:460V) + CAPPRM:ASME) + FREQ:60HZ) + CAPPRE:IEC , (MOVOL:230V , MOVOL:460V , MOVOL:575V) + CAPPRE:ULCUL + CAPPRM:ASME + FREQ:60HZ) + COOL:AIR **(05/02/2020 - 30/12/2027)** (CAPPRE:IEC + CAPPRM:MHLW + MOVOL:200V , CAPPRE:ULCUL + CAPPRM:ASME + FREQ:60HZ + MOVOL:230V) + COOL:AIR	2X27
	1088 0037 80	1	CONNECTOR	**(12/12/2018 - 24/02/2019)** ((((CAPPRM:AS1210 , CAPPRM:CE , CAPPRM:MHLW , CAPPRM:MOM) + MOVOL:400V , CAPPRM:CE + COOL:AIR + MOVOL:500V) + FREQ:50HZ , ((MOVOL:380V , MOVOL:460V) + CAPPRM:ASME , CAPPRM:MHLW + MOVOL:460V) + FREQ:60HZ , CAPPRM:MHLW + COOL:AIR + MOVOL:200V) + CAPPRE:IEC , ((MOVOL:230V , MOVOL:575V) + COOL:AIR , MOVOL:460V) + CAPPRE:ULCUL + CAPPRM:ASME + FREQ:60HZ) **(25/02/2019 - 04/02/2020)** ((((CAPPRM:AS1210 , CAPPRM:CE , CAPPRM:MHLW , CAPPRM:MOM) + MOVOL:400V , CAPPRM:CE + MOVOL:500V , CAPPRM:MHLW + MOVOL:200V) + FREQ:50HZ , ((MOVOL:200V , MOVOL:460V) + CAPPRM:MHLW , (MOVOL:380V , MOVOL:460V) + CAPPRM:ASME) + FREQ:60HZ) + CAPPRE:IEC , (MOVOL:230V , MOVOL:460V , MOVOL:575V) + CAPPRE:ULCUL + CAPPRM:ASME + FREQ:60HZ) + COOL:AIR **(05/02/2020 - 30/12/2027)** (CAPPRE:IEC + CAPPRM:MHLW + MOVOL:200V , CAPPRE:ULCUL + CAPPRM:ASME + FREQ:60HZ + MOVOL:230V) + COOL:AIR	2X28

Legend:

CAPPRE:IEC - Component approval electrical:IEC
CAPPRE:ULCUL - Component approval electrical:UL/cUL
CAPPRM:AS1210 - Component approval mechanical:AS1210
CAPPRM:ASME - Component approval mechanical:ASME
CAPPRM:CE - Component approval mechanical:CE
CAPPRM:MHLW - Component approval mechanical:MHLW
CAPPRM:MOM - Component approval mechanical:MOM
COOL:AIR - Cooling:Air cooled
FREQ:50HZ - Frequency:50 Hz
FREQ:60HZ - Frequency:60 Hz
IDRY:N - Integrated dryer:No
MODEL:GA110VP_16 - Model:GA 110VSD+
MOVOL:200V - Supply voltage:200 V
MOVOL:230V - Supply voltage:230 V
MOVOL:380V - Supply voltage:380 V
MOVOL:400V - Supply voltage:400 V
MOVOL:460V - Supply voltage:460 V
MOVOL:500V - Supply voltage:500 V
MOVOL:575V - Supply voltage:575 V

21.24 - Cubicle components GA 110 VSD+ - (200V-380V-460V/60Hz - IEC, 230V-460V-575V/60Hz - UL-cUL, 200V-400V-500V/50Hz - IEC) - Pack (12/12/2018 - 04/02/2020)

((((CAPPRM:AS1210 , CAPPRM:CE , CAPPRM:MHLW , CAPPRM:MOM) + MOVOL:400V , CAPPRM:CE + COOL:AIR + MOVOL:500V) + FREQ:50HZ , ((MOVOL:380V , MOVOL:460V) + CAPPRM:ASME , CAPPRM:MHLW + MOVOL:460V) + FREQ:60HZ) + CAPPRE:IEC , (COOL:AIR + MOVOL:575V , MOVOL:460V) + CAPPRE:ULCUL + CAPPRM:ASME + FREQ:60HZ) + IDRY:N + MODEL:GA110VP_16

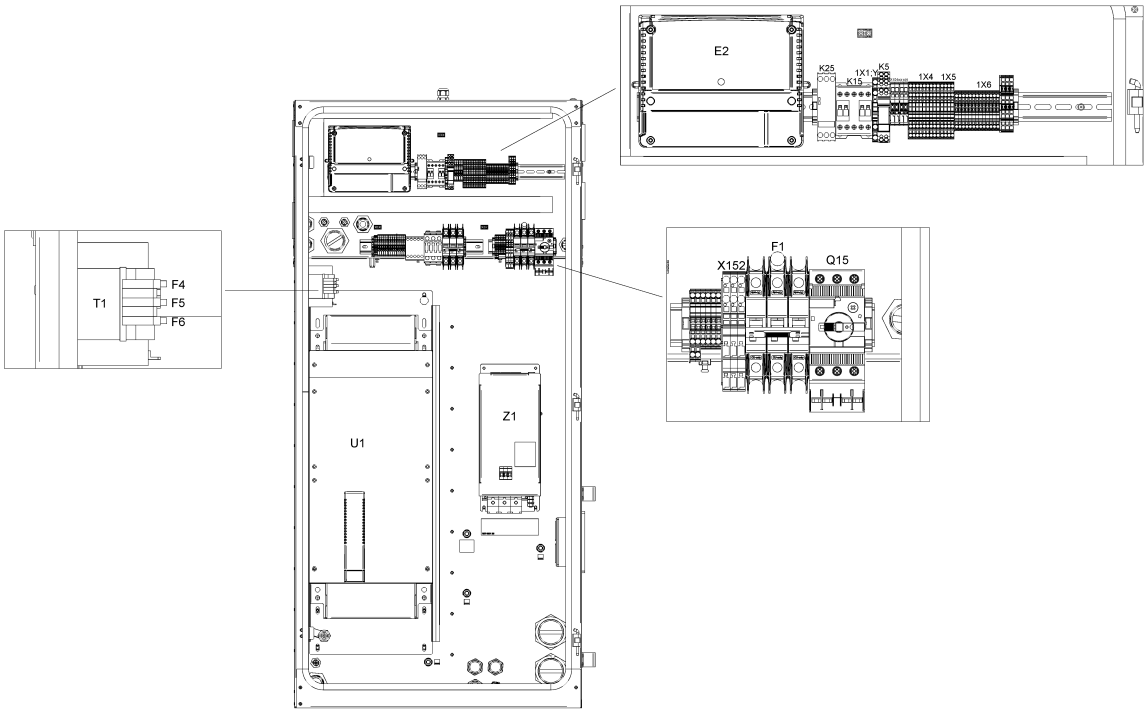

21.24 - Cubicle components GA 110 VSD+ - (200V-380V-460V/60Hz - IEC, 230V-460V-575V/60Hz - UL-cUL, 200V-400V-500V/50Hz - IEC) - Pack (12/12/2018 - 04/02/2020)

((((CAPPRM:AS1210 , CAPPRM:CE , CAPPRM:MHLW , CAPPRM:MOM) + MOVOL:400V , CAPPRM:CE + COOL:AIR + MOVOL:500V) + FREQ:50HZ , ((MOVOL:380V , MOVOL:460V) + CAPPRM:ASME , CAPPRM:MHLW + MOVOL:460V) + FREQ:60HZ) + CAPPRE:IEC , (COOL:AIR + MOVOL:575V , MOVOL:460V) + CAPPRE:ULCUL + CAPPRM:ASME + FREQ:60HZ) + IDRY:N + MODEL:GA110VP_16

Ref	Part Number	Qty	Name	Validity	EL
	1088 0031 32	1	CONNECTOR	**(12/12/2018 - 24/02/2019)** ((((CAPPRM:AS1210 , CAPPRM:CE , CAPPRM:MHLW , CAPPRM:MOM) + MOVOL:400V , CAPPRM:CE + COOL:AIR + MOVOL:500V) + FREQ:50HZ , ((MOVOL:380V , MOVOL:460V) + CAPPRM:ASME , CAPPRM:MHLW + MOVOL:460V) + FREQ:60HZ , CAPPRM:MHLW + COOL:AIR + MOVOL:200V) + CAPPRE:IEC , ((MOVOL:230V , MOVOL:575V) + COOL:AIR , MOVOL:460V) + CAPPRE:ULCUL + CAPPRM:ASME + FREQ:60HZ) **(25/02/2019 - 04/02/2020)** ((((CAPPRM:AS1210 , CAPPRM:CE , CAPPRM:MHLW , CAPPRM:MOM) + MOVOL:400V , CAPPRM:CE + MOVOL:500V , CAPPRM:MHLW + MOVOL:200V) + FREQ:50HZ , ((MOVOL:200V , MOVOL:460V) + CAPPRM:MHLW , (MOVOL:380V , MOVOL:460V) + CAPPRM:ASME) + FREQ:60HZ) + CAPPRE:IEC , (MOVOL:230V , MOVOL:460V , MOVOL:575V) + CAPPRE:ULCUL + CAPPRM:ASME + FREQ:60HZ) + COOL:AIR **(05/02/2020 - 30/12/2027)** (CAPPRE:IEC + CAPPRM:MHLW + MOVOL:200V , CAPPRE:ULCUL + CAPPRM:ASME + FREQ:60HZ + MOVOL:230V) + COOL:AIR	2X30
	1088 0031 26	1	CONNECTOR 6-POLE	**(12/12/2018 - 24/02/2019)** ((((CAPPRM:AS1210 , CAPPRM:CE , CAPPRM:MHLW , CAPPRM:MOM) + MOVOL:400V , CAPPRM:CE + COOL:AIR + MOVOL:500V) + FREQ:50HZ , ((MOVOL:380V , MOVOL:460V) + CAPPRM:ASME , CAPPRM:MHLW + MOVOL:460V) + FREQ:60HZ , CAPPRM:MHLW + COOL:AIR + MOVOL:200V) + CAPPRE:IEC , ((MOVOL:230V , MOVOL:575V) + COOL:AIR , MOVOL:460V) + CAPPRE:ULCUL + CAPPRM:ASME + FREQ:60HZ) **(25/02/2019 - 04/02/2020)** ((((CAPPRM:AS1210 , CAPPRM:CE , CAPPRM:MHLW , CAPPRM:MOM) + MOVOL:400V , CAPPRM:CE + MOVOL:500V , CAPPRM:MHLW + MOVOL:200V) + FREQ:50HZ , ((MOVOL:200V , MOVOL:460V) + CAPPRM:MHLW , (MOVOL:380V , MOVOL:460V) + CAPPRM:ASME) + FREQ:60HZ) + CAPPRE:IEC , (MOVOL:230V , MOVOL:460V , MOVOL:575V) + CAPPRE:ULCUL + CAPPRM:ASME + FREQ:60HZ) + COOL:AIR **(05/02/2020 - 30/12/2027)** (CAPPRE:IEC + CAPPRM:MHLW + MOVOL:200V , CAPPRE:ULCUL + CAPPRM:ASME + FREQ:60HZ + MOVOL:230V) + COOL:AIR	2X31

Legend:

CAPPRE:IEC - Component approval electrical:IEC
CAPPRE:ULCUL - Component approval electrical:UL/cUL
CAPPRM:AS1210 - Component approval mechanical:AS1210
CAPPRM:ASME - Component approval mechanical:ASME
CAPPRM:CE - Component approval mechanical:CE
CAPPRM:MHLW - Component approval mechanical:MHLW
CAPPRM:MOM - Component approval mechanical:MOM
COOL:AIR - Cooling:Air cooled
FREQ:50HZ - Frequency:50 Hz
FREQ:60HZ - Frequency:60 Hz
IDRY:N - Integrated dryer:No
MODEL:GA110VP_16 - Model:GA 110VSD+
MOVOL:200V - Supply voltage:200 V
MOVOL:230V - Supply voltage:230 V
MOVOL:380V - Supply voltage:380 V
MOVOL:400V - Supply voltage:400 V
MOVOL:460V - Supply voltage:460 V
MOVOL:500V - Supply voltage:500 V
MOVOL:575V - Supply voltage:575 V

21.24 - Cubicle components GA 110 VSD+ - (200V-380V-460V/60Hz - IEC, 230V-460V-575V/60Hz - UL-cUL, 200V-400V-500V/50Hz - IEC) - Pack (12/12/2018 - 04/02/2020)

((((CAPPRM:AS1210 , CAPPRM:CE , CAPPRM:MHLW , CAPPRM:MOM) + MOVOL:400V , CAPPRM:CE + COOL:AIR + MOVOL:500V) + FREQ:50HZ , ((MOVOL:380V , MOVOL:460V) + CAPPRM:ASME , CAPPRM:MHLW + MOVOL:460V) + FREQ:60HZ) + CAPPRE:IEC , (COOL:AIR + MOVOL:575V , MOVOL:460V) + CAPPRE:ULCUL + CAPPRM:ASME + FREQ:60HZ) + IDRY:N + MODEL:GA110VP_16

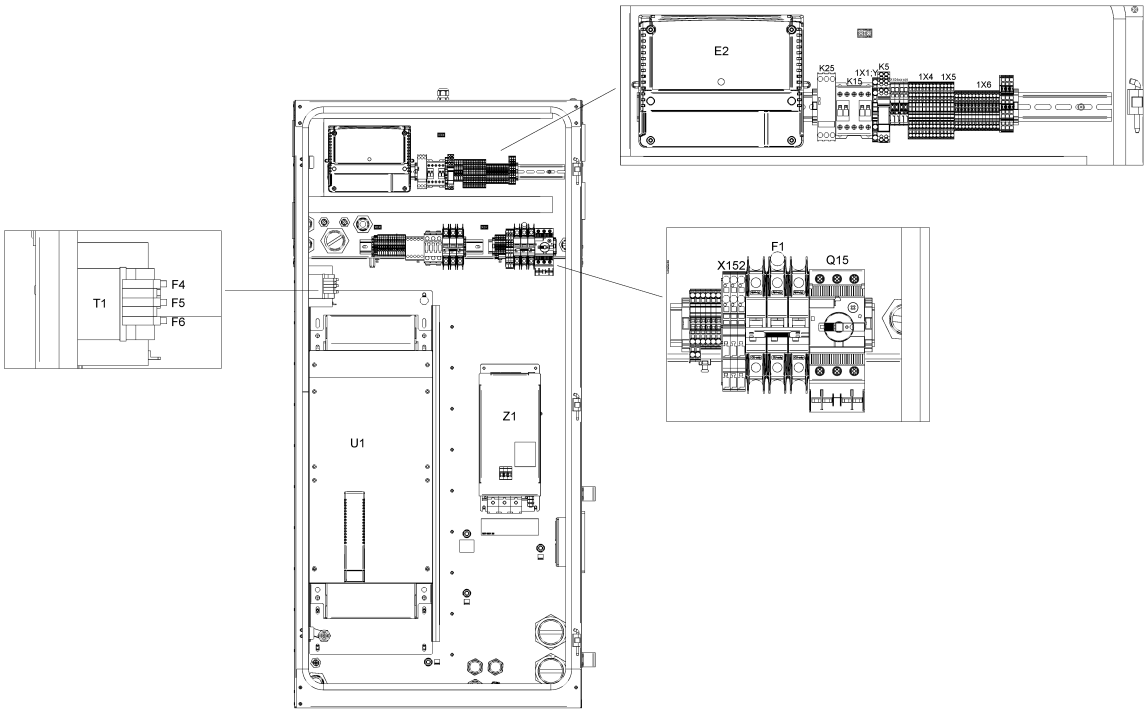

21.24 - Cubicle components GA 110 VSD+ - (200V-380V-460V/60Hz - IEC, 230V-460V-575V/60Hz - UL-cUL, 200V-400V-500V/50Hz - IEC) - Pack (12/12/2018 - 04/02/2020)

((((CAPPRM:AS1210 , CAPPRM:CE , CAPPRM:MHLW , CAPPRM:MOM) + MOVOL:400V , CAPPRM:CE + COOL:AIR + MOVOL:500V) + FREQ:50HZ , ((MOVOL:380V , MOVOL:460V) + CAPPRM:ASME , CAPPRM:MHLW + MOVOL:460V) + FREQ:60HZ) + CAPPRE:IEC , (COOL:AIR + MOVOL:575V , MOVOL:460V) + CAPPRE:ULCUL + CAPPRM:ASME + FREQ:60HZ) + IDRY:N + MODEL:GA110VP_16

Ref	Part Number	Qty	Name	Validity	EL
	~~1089 9664 06~~	1	SWITCH	**(12/12/2018 - 24/02/2019)** ((((CAPPRM:AS1210 , CAPPRM:CE , CAPPRM:MHLW , CAPPRM:MOM) + MOVOL:400V , CAPPRM:CE + COOL:AIR + MOVOL:500V) + FREQ:50HZ , ((MOVOL:380V , MOVOL:460V) + CAPPRM:ASME , CAPPRM:MHLW + MOVOL:460V) + FREQ:60HZ , CAPPRM:MHLW + COOL:AIR + MOVOL:200V) + CAPPRE:IEC , ((MOVOL:230V , MOVOL:575V) + COOL:AIR , MOVOL:460V) + CAPPRE:ULCUL + CAPPRM:ASME + FREQ:60HZ) **(25/02/2019 - 04/02/2020)** ((((CAPPRM:AS1210 , CAPPRM:CE , CAPPRM:MHLW , CAPPRM:MOM) + MOVOL:400V , CAPPRM:CE + MOVOL:500V , CAPPRM:MHLW + MOVOL:200V) + FREQ:50HZ , ((MOVOL:200V , MOVOL:460V) + CAPPRM:MHLW , (MOVOL:380V , MOVOL:460V) + CAPPRM:ASME) + FREQ:60HZ) + CAPPRE:IEC , (MOVOL:230V , MOVOL:460V , MOVOL:575V) + CAPPRE:ULCUL + CAPPRM:ASME + FREQ:60HZ) + COOL:AIR **(05/02/2020 - 30/12/2027)** (CAPPRE:IEC + CAPPRM:MHLW + MOVOL:200V , CAPPRE:ULCUL + CAPPRM:ASME + FREQ:60HZ + MOVOL:230V) + COOL:AIR	Q15
	Substituted by:	1089 9551 97 - AUX.CONTACT CIRCUIT BREAKER (quantity: 1)			
	1089 9551 19	1	CIRCUIT BREAKER	**(12/12/2018 - 24/02/2019)** ((((CAPPRM:AS1210 , CAPPRM:CE , CAPPRM:MHLW , CAPPRM:MOM) + MOVOL:400V , CAPPRM:CE + COOL:AIR + MOVOL:500V) + FREQ:50HZ , ((MOVOL:380V , MOVOL:460V) + CAPPRM:ASME , CAPPRM:MHLW + MOVOL:460V) + FREQ:60HZ , CAPPRM:MHLW + COOL:AIR + MOVOL:200V) + CAPPRE:IEC , ((MOVOL:230V , MOVOL:575V) + COOL:AIR , MOVOL:460V) + CAPPRE:ULCUL + CAPPRM:ASME + FREQ:60HZ) **(25/02/2019 - 04/02/2020)** ((((CAPPRM:AS1210 , CAPPRM:CE , CAPPRM:MHLW , CAPPRM:MOM) + MOVOL:400V , CAPPRM:CE + MOVOL:500V , CAPPRM:MHLW + MOVOL:200V) + FREQ:50HZ , ((MOVOL:200V , MOVOL:460V) + CAPPRM:MHLW , (MOVOL:380V , MOVOL:460V) + CAPPRM:ASME) + FREQ:60HZ) + CAPPRE:IEC , (MOVOL:230V , MOVOL:460V , MOVOL:575V) + CAPPRE:ULCUL + CAPPRM:ASME + FREQ:60HZ) + COOL:AIR **(05/02/2020 - 30/12/2027)** (CAPPRE:IEC + CAPPRM:MHLW + MOVOL:200V , CAPPRE:ULCUL + CAPPRM:ASME + FREQ:60HZ + MOVOL:230V) + COOL:AIR	Q15

Legend:

CAPPRE:IEC - Component approval electrical:IEC
CAPPRE:ULCUL - Component approval electrical:UL/cUL
CAPPRM:AS1210 - Component approval mechanical:AS1210
CAPPRM:ASME - Component approval mechanical:ASME
CAPPRM:CE - Component approval mechanical:CE
CAPPRM:MHLW - Component approval mechanical:MHLW
CAPPRM:MOM - Component approval mechanical:MOM
COOL:AIR - Cooling:Air cooled
FREQ:50HZ - Frequency:50 Hz
FREQ:60HZ - Frequency:60 Hz
IDRY:N - Integrated dryer:No
MODEL:GA110VP_16 - Model:GA 110VSD+
MOVOL:200V - Supply voltage:200 V
MOVOL:230V - Supply voltage:230 V
MOVOL:380V - Supply voltage:380 V
MOVOL:400V - Supply voltage:400 V
MOVOL:460V - Supply voltage:460 V
MOVOL:500V - Supply voltage:500 V
MOVOL:575V - Supply voltage:575 V

21.24 - Cubicle components GA 110 VSD+ - (200V-380V-460V/60Hz - IEC, 230V-460V-575V/60Hz - UL-cUL, 200V-400V-500V/50Hz - IEC) - Pack (12/12/2018 - 04/02/2020)

((((CAPPRM:AS1210 , CAPPRM:CE , CAPPRM:MHLW , CAPPRM:MOM) + MOVOL:400V , CAPPRM:CE + COOL:AIR + MOVOL:500V) + FREQ:50HZ , ((MOVOL:380V , MOVOL:460V) + CAPPRM:ASME , CAPPRM:MHLW + MOVOL:460V) + FREQ:60HZ) + CAPPRE:IEC , (COOL:AIR + MOVOL:575V , MOVOL:460V) + CAPPRE:ULCUL + CAPPRM:ASME + FREQ:60HZ) + IDRY:N + MODEL:GA110VP_16

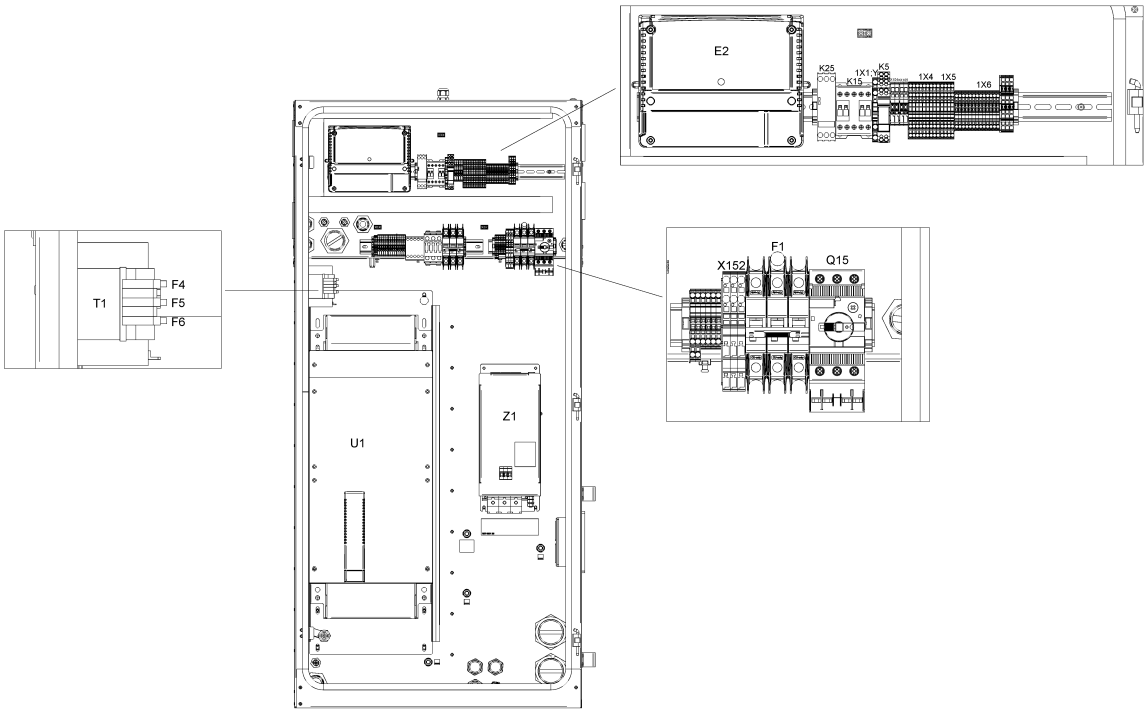

21.24 - Cubicle components GA 110 VSD+ - (200V-380V-460V/60Hz - IEC, 230V-460V-575V/60Hz - UL-cUL, 200V-400V-500V/50Hz - IEC) - Pack (12/12/2018 - 04/02/2020)

((((CAPPRM:AS1210 , CAPPRM:CE , CAPPRM:MHLW , CAPPRM:MOM) + MOVOL:400V , CAPPRM:CE + COOL:AIR + MOVOL:500V) + FREQ:50HZ , ((MOVOL:380V , MOVOL:460V) + CAPPRM:ASME , CAPPRM:MHLW + MOVOL:460V) + FREQ:60HZ) + CAPPRE:IEC , (COOL:AIR + MOVOL:575V , MOVOL:460V) + CAPPRE:ULCUL + CAPPRM:ASME + FREQ:60HZ) + IDRY:N + MODEL:GA110VP_16

Ref	Part Number	Qty	Name	Validity	EL
	1088 0038 26	1	TERMINAL	**(12/12/2018 - 24/02/2019)** ((((CAPPRM:AS1210 , CAPPRM:CE , CAPPRM:MHLW , CAPPRM:MOM) + MOVOL:400V , CAPPRM:CE + COOL:AIR + MOVOL:500V) + FREQ:50HZ , ((MOVOL:380V , MOVOL:460V) + CAPPRM:ASME , CAPPRM:MHLW + MOVOL:460V) + FREQ:60HZ , CAPPRM:MHLW + COOL:AIR + MOVOL:200V) + CAPPRE:IEC , ((MOVOL:230V , MOVOL:575V) + COOL:AIR , MOVOL:460V) + CAPPRE:ULCUL + CAPPRM:ASME + FREQ:60HZ) **(25/02/2019 - 04/02/2020)** ((((CAPPRM:AS1210 , CAPPRM:CE , CAPPRM:MHLW , CAPPRM:MOM) + MOVOL:400V , CAPPRM:CE + MOVOL:500V , CAPPRM:MHLW + MOVOL:200V) + FREQ:50HZ , ((MOVOL:200V , MOVOL:460V) + CAPPRM:MHLW , (MOVOL:380V , MOVOL:460V) + CAPPRM:ASME) + FREQ:60HZ) + CAPPRE:IEC , (MOVOL:230V , MOVOL:460V , MOVOL:575V) + CAPPRE:ULCUL + CAPPRM:ASME + FREQ:60HZ) + COOL:AIR **(05/02/2020 - 30/12/2027)** (CAPPRE:IEC + CAPPRM:MHLW + MOVOL:200V , CAPPRE:ULCUL + CAPPRM:ASME + FREQ:60HZ + MOVOL:230V) + COOL:AIR	1X1:Y/D
	1089 9602 79	1	CONTACTOR 110 V	**(12/12/2018 - 24/02/2019)** ((((CAPPRM:AS1210 , CAPPRM:CE , CAPPRM:MHLW , CAPPRM:MOM) + MOVOL:400V , CAPPRM:CE + COOL:AIR + MOVOL:500V) + FREQ:50HZ , ((MOVOL:380V , MOVOL:460V) + CAPPRM:ASME , CAPPRM:MHLW + MOVOL:460V) + FREQ:60HZ , CAPPRM:MHLW + COOL:AIR + MOVOL:200V) + CAPPRE:IEC , ((MOVOL:230V , MOVOL:575V) + COOL:AIR , MOVOL:460V) + CAPPRE:ULCUL + CAPPRM:ASME + FREQ:60HZ) **(25/02/2019 - 04/02/2020)** ((((CAPPRM:AS1210 , CAPPRM:CE , CAPPRM:MHLW , CAPPRM:MOM) + MOVOL:400V , CAPPRM:CE + MOVOL:500V , CAPPRM:MHLW + MOVOL:200V) + FREQ:50HZ , ((MOVOL:200V , MOVOL:460V) + CAPPRM:MHLW , (MOVOL:380V , MOVOL:460V) + CAPPRM:ASME) + FREQ:60HZ) + CAPPRE:IEC , (MOVOL:230V , MOVOL:460V , MOVOL:575V) + CAPPRE:ULCUL + CAPPRM:ASME + FREQ:60HZ) + COOL:AIR **(05/02/2020 - 30/12/2027)** (CAPPRE:IEC + CAPPRM:MHLW + MOVOL:200V , CAPPRE:ULCUL + CAPPRM:ASME + FREQ:60HZ + MOVOL:230V) + COOL:AIR	K15

Legend:

CAPPRE:IEC - Component approval electrical:IEC
CAPPRE:ULCUL - Component approval electrical:UL/cUL
CAPPRM:AS1210 - Component approval mechanical:AS1210
CAPPRM:ASME - Component approval mechanical:ASME
CAPPRM:CE - Component approval mechanical:CE
CAPPRM:MHLW - Component approval mechanical:MHLW
CAPPRM:MOM - Component approval mechanical:MOM
COOL:AIR - Cooling:Air cooled
FREQ:50HZ - Frequency:50 Hz
FREQ:60HZ - Frequency:60 Hz
IDRY:N - Integrated dryer:No
MODEL:GA110VP_16 - Model:GA 110VSD+
MOVOL:200V - Supply voltage:200 V
MOVOL:230V - Supply voltage:230 V
MOVOL:380V - Supply voltage:380 V
MOVOL:400V - Supply voltage:400 V
MOVOL:460V - Supply voltage:460 V
MOVOL:500V - Supply voltage:500 V
MOVOL:575V - Supply voltage:575 V

21.24 - Cubicle components GA 110 VSD+ - (200V-380V-460V/60Hz - IEC, 230V-460V-575V/60Hz - UL-cUL, 200V-400V-500V/50Hz - IEC) - Pack (12/12/2018 - 04/02/2020)

((((CAPPRM:AS1210 , CAPPRM:CE , CAPPRM:MHLW , CAPPRM:MOM) + MOVOL:400V , CAPPRM:CE + COOL:AIR + MOVOL:500V) + FREQ:50HZ , ((MOVOL:380V , MOVOL:460V) + CAPPRM:ASME , CAPPRM:MHLW + MOVOL:460V) + FREQ:60HZ) + CAPPRE:IEC , (COOL:AIR + MOVOL:575V , MOVOL:460V) + CAPPRE:ULCUL + CAPPRM:ASME + FREQ:60HZ) + IDRY:N + MODEL:GA110VP_16

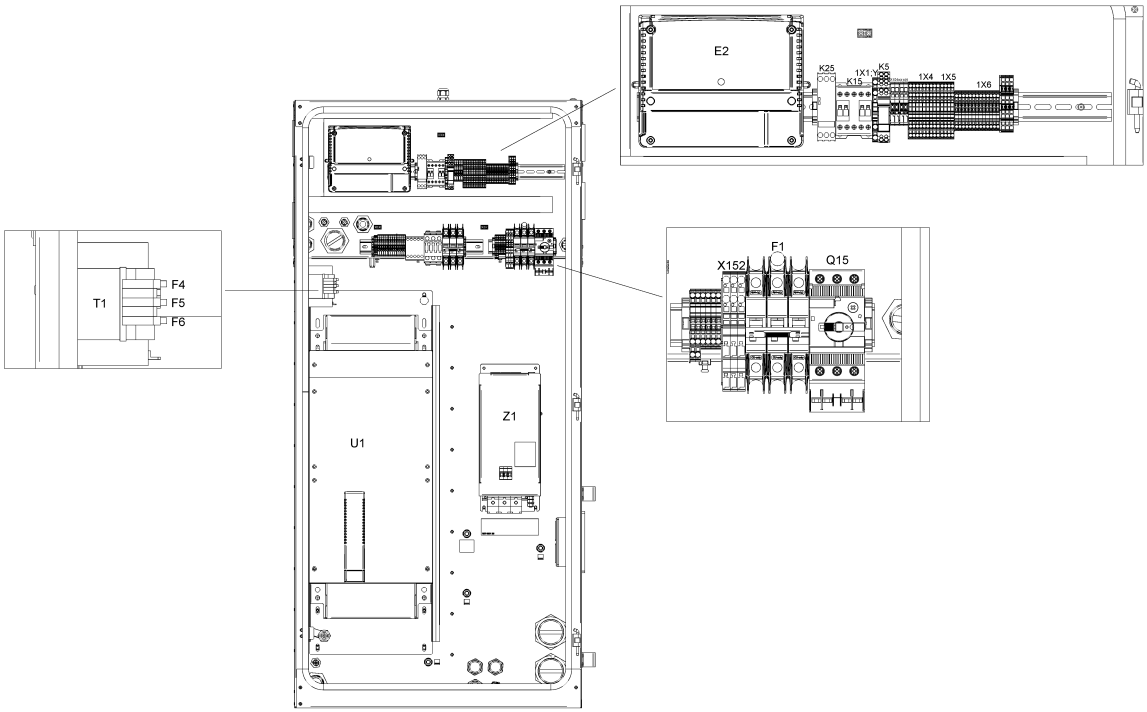

21.24 - Cubicle components GA 110 VSD+ - (200V-380V-460V/60Hz - IEC, 230V-460V-575V/60Hz - UL-cUL, 200V-400V-500V/50Hz - IEC) - Pack (12/12/2018 - 04/02/2020)

((((CAPPRM:AS1210 , CAPPRM:CE , CAPPRM:MHLW , CAPPRM:MOM) + MOVOL:400V , CAPPRM:CE + COOL:AIR + MOVOL:500V) + FREQ:50HZ , ((MOVOL:380V , MOVOL:460V) + CAPPRM:ASME , CAPPRM:MHLW + MOVOL:460V) + FREQ:60HZ) + CAPPRE:IEC , (COOL:AIR + MOVOL:575V , MOVOL:460V) + CAPPRE:ULCUL + CAPPRM:ASME + FREQ:60HZ) + IDRY:N + MODEL:GA110VP_16

Ref	Part Number	Qty	Name	Validity	EL
	1089 9461 26	1	PHASE SEQUENCE RELAY	**(12/12/2018 - 24/02/2019)** ((((CAPPRM:AS1210 , CAPPRM:CE , CAPPRM:MHLW , CAPPRM:MOM) + MOVOL:400V , CAPPRM:CE + COOL:AIR + MOVOL:500V) + FREQ:50HZ , ((MOVOL:380V , MOVOL:460V) + CAPPRM:ASME , CAPPRM:MHLW + MOVOL:460V) + FREQ:60HZ , CAPPRM:MHLW + COOL:AIR + MOVOL:200V) + CAPPRE:IEC , ((MOVOL:230V , MOVOL:575V) + COOL:AIR , MOVOL:460V) + CAPPRE:ULCUL + CAPPRM:ASME + FREQ:60HZ) **(25/02/2019 - 04/02/2020)** ((((CAPPRM:AS1210 , CAPPRM:CE , CAPPRM:MHLW , CAPPRM:MOM) + MOVOL:400V , CAPPRM:CE + MOVOL:500V , CAPPRM:MHLW + MOVOL:200V) + FREQ:50HZ , ((MOVOL:200V , MOVOL:460V) + CAPPRM:MHLW , (MOVOL:380V , MOVOL:460V) + CAPPRM:ASME) + FREQ:60HZ) + CAPPRE:IEC , (MOVOL:230V , MOVOL:460V , MOVOL:575V) + CAPPRE:ULCUL + CAPPRM:ASME + FREQ:60HZ) + COOL:AIR **(05/02/2020 - 30/12/2027)** (CAPPRE:IEC + CAPPRM:MHLW + MOVOL:200V , CAPPRE:ULCUL + CAPPRM:ASME + FREQ:60HZ + MOVOL:230V) + COOL:AIR	K25
	1088 0032 17	1	RELAY 115 VAC	**(12/12/2018 - 24/02/2019)** ((((CAPPRM:AS1210 , CAPPRM:CE , CAPPRM:MHLW , CAPPRM:MOM) + MOVOL:400V , CAPPRM:CE + COOL:AIR + MOVOL:500V) + FREQ:50HZ , ((MOVOL:380V , MOVOL:460V) + CAPPRM:ASME , CAPPRM:MHLW + MOVOL:460V) + FREQ:60HZ , CAPPRM:MHLW + COOL:AIR + MOVOL:200V) + CAPPRE:IEC , ((MOVOL:230V , MOVOL:575V) + COOL:AIR , MOVOL:460V) + CAPPRE:ULCUL + CAPPRM:ASME + FREQ:60HZ) **(25/02/2019 - 04/02/2020)** ((((CAPPRM:AS1210 , CAPPRM:CE , CAPPRM:MHLW , CAPPRM:MOM) + MOVOL:400V , CAPPRM:CE + MOVOL:500V , CAPPRM:MHLW + MOVOL:200V) + FREQ:50HZ , ((MOVOL:200V , MOVOL:460V) + CAPPRM:MHLW , (MOVOL:380V , MOVOL:460V) + CAPPRM:ASME) + FREQ:60HZ) + CAPPRE:IEC , (MOVOL:230V , MOVOL:460V , MOVOL:575V) + CAPPRE:ULCUL + CAPPRM:ASME + FREQ:60HZ) + COOL:AIR **(05/02/2020 - 30/12/2027)** (CAPPRE:IEC + CAPPRM:MHLW + MOVOL:200V , CAPPRE:ULCUL + CAPPRM:ASME + FREQ:60HZ + MOVOL:230V) + COOL:AIR	K5

Legend:

CAPPRE:IEC - Component approval electrical:IEC
CAPPRE:ULCUL - Component approval electrical:UL/cUL
CAPPRM:AS1210 - Component approval mechanical:AS1210
CAPPRM:ASME - Component approval mechanical:ASME
CAPPRM:CE - Component approval mechanical:CE
CAPPRM:MHLW - Component approval mechanical:MHLW
CAPPRM:MOM - Component approval mechanical:MOM
COOL:AIR - Cooling:Air cooled
FREQ:50HZ - Frequency:50 Hz
FREQ:60HZ - Frequency:60 Hz
IDRY:N - Integrated dryer:No
MODEL:GA110VP_16 - Model:GA 110VSD+
MOVOL:200V - Supply voltage:200 V
MOVOL:230V - Supply voltage:230 V
MOVOL:380V - Supply voltage:380 V
MOVOL:400V - Supply voltage:400 V
MOVOL:460V - Supply voltage:460 V
MOVOL:500V - Supply voltage:500 V
MOVOL:575V - Supply voltage:575 V

21.24 - Cubicle components GA 110 VSD+ - (200V-380V-460V/60Hz - IEC, 230V-460V-575V/60Hz - UL-cUL, 200V-400V-500V/50Hz - IEC) - Pack (12/12/2018 - 04/02/2020)

((((CAPPRM:AS1210 , CAPPRM:CE , CAPPRM:MHLW , CAPPRM:MOM) + MOVOL:400V , CAPPRM:CE + COOL:AIR + MOVOL:500V) + FREQ:50HZ , ((MOVOL:380V , MOVOL:460V) + CAPPRM:ASME , CAPPRM:MHLW + MOVOL:460V) + FREQ:60HZ) + CAPPRE:IEC , (COOL:AIR + MOVOL:575V , MOVOL:460V) + CAPPRE:ULCUL + CAPPRM:ASME + FREQ:60HZ) + IDRY:N + MODEL:GA110VP_16

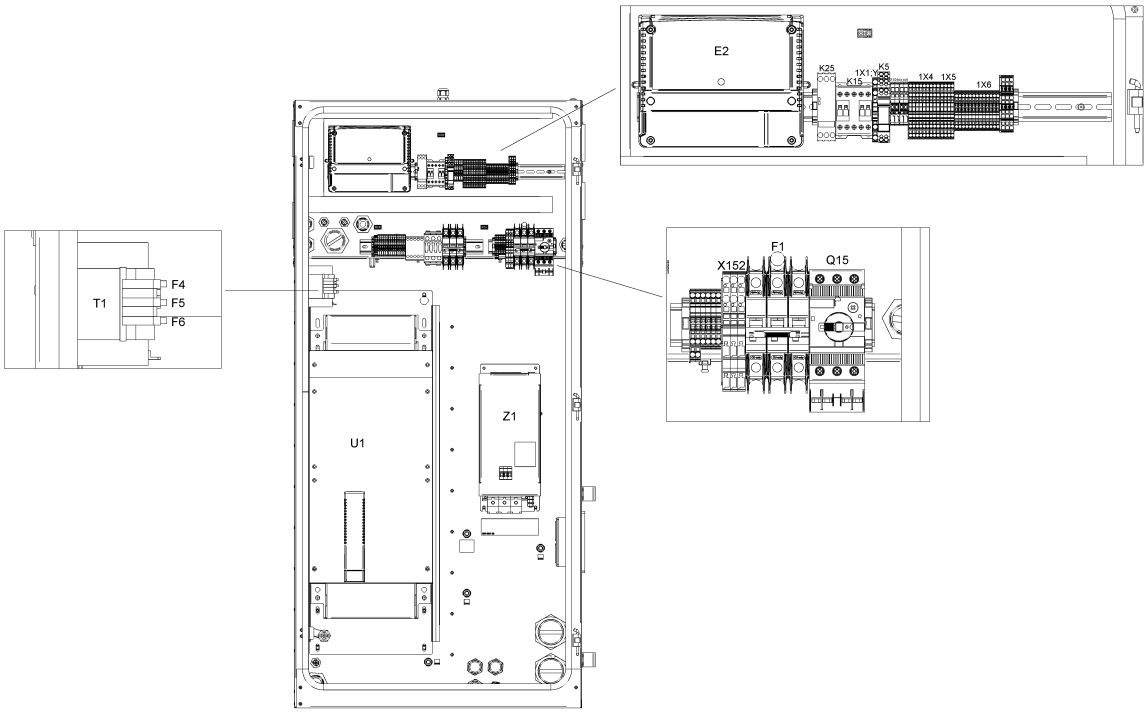

21.24 - Cubicle components GA 110 VSD+ - (200V-380V-460V/60Hz - IEC, 230V-460V-575V/60Hz - UL-cUL, 200V-400V-500V/50Hz - IEC) - Pack (12/12/2018 - 04/02/2020)

((((CAPPRM:AS1210 , CAPPRM:CE , CAPPRM:MHLW , CAPPRM:MOM) + MOVOL:400V , CAPPRM:CE + COOL:AIR + MOVOL:500V) + FREQ:50HZ , ((MOVOL:380V , MOVOL:460V) + CAPPRM:ASME , CAPPRM:MHLW + MOVOL:460V) + FREQ:60HZ) + CAPPRE:IEC , (COOL:AIR + MOVOL:575V , MOVOL:460V) + CAPPRE:ULCUL + CAPPRM:ASME + FREQ:60HZ) + IDRY:N + MODEL:GA110VP_16

Ref	Part Number	Qty	Name	Validity	EL
	0991 8011 21	AR	CABLE TRAY	**(12/12/2018 - 24/02/2019)** ((((CAPPRM:AS1210 , CAPPRM:CE , CAPPRM:MHLW , CAPPRM:MOM) + MOVOL:400V , CAPPRM:CE + COOL:AIR + MOVOL:500V) + FREQ:50HZ , ((MOVOL:380V , MOVOL:460V) + CAPPRM:ASME , CAPPRM:MHLW + MOVOL:460V) + FREQ:60HZ , CAPPRM:MHLW + COOL:AIR + MOVOL:200V) + CAPPRE:IEC , ((MOVOL:230V , MOVOL:575V) + COOL:AIR , MOVOL:460V) + CAPPRE:ULCUL + CAPPRM:ASME + FREQ:60HZ) **(25/02/2019 - 04/02/2020)** ((((CAPPRM:AS1210 , CAPPRM:CE , CAPPRM:MHLW , CAPPRM:MOM) + MOVOL:400V , CAPPRM:CE + MOVOL:500V , CAPPRM:MHLW + MOVOL:200V) + FREQ:50HZ , ((MOVOL:200V , MOVOL:460V) + CAPPRM:MHLW , (MOVOL:380V , MOVOL:460V) + CAPPRM:ASME) + FREQ:60HZ) + CAPPRE:IEC , (MOVOL:230V , MOVOL:460V , MOVOL:575V) + CAPPRE:ULCUL + CAPPRM:ASME + FREQ:60HZ) + COOL:AIR **(05/02/2020 - 30/12/2027)** (CAPPRE:IEC + CAPPRM:MHLW + MOVOL:200V , CAPPRE:ULCUL + CAPPRM:ASME + FREQ:60HZ + MOVOL:230V) + COOL:AIR	L=1384mm
	0697 9811 16	1	PLUG	**(12/12/2018 - 24/02/2019)** ((((CAPPRM:AS1210 , CAPPRM:CE , CAPPRM:MHLW , CAPPRM:MOM) + MOVOL:400V , CAPPRM:CE + COOL:AIR + MOVOL:500V) + FREQ:50HZ , ((MOVOL:380V , MOVOL:460V) + CAPPRM:ASME , CAPPRM:MHLW + MOVOL:460V) + FREQ:60HZ , CAPPRM:MHLW + COOL:AIR + MOVOL:200V) + CAPPRE:IEC , ((MOVOL:230V , MOVOL:575V) + COOL:AIR , MOVOL:460V) + CAPPRE:ULCUL + CAPPRM:ASME + FREQ:60HZ) **(25/02/2019 - 04/02/2020)** ((((CAPPRM:AS1210 , CAPPRM:CE , CAPPRM:MHLW , CAPPRM:MOM) + MOVOL:400V , CAPPRM:CE + MOVOL:500V , CAPPRM:MHLW + MOVOL:200V) + FREQ:50HZ , ((MOVOL:200V , MOVOL:460V) + CAPPRM:MHLW , (MOVOL:380V , MOVOL:460V) + CAPPRM:ASME) + FREQ:60HZ) + CAPPRE:IEC , (MOVOL:230V , MOVOL:460V , MOVOL:575V) + CAPPRE:ULCUL + CAPPRM:ASME + FREQ:60HZ) + COOL:AIR **(05/02/2020 - 30/12/2027)** (CAPPRE:IEC + CAPPRM:MHLW + MOVOL:200V , CAPPRE:ULCUL + CAPPRM:ASME + FREQ:60HZ + MOVOL:230V) + COOL:AIR	

Electrical legend: Plug for Dryer

Legend:

CAPPRE:IEC - Component approval electrical:IEC
CAPPRM:ASME - Component approval mechanical:ASME
CAPPRM:MOM - Component approval mechanical:MOM
FREQ:60HZ - Frequency:60 Hz
MOVOL:200V - Supply voltage:200 V
MOVOL:400V - Supply voltage:400 V
MOVOL:575V - Supply voltage:575 V
CAPPRE:ULCUL - Component approval electrical:UL/cUL
CAPPRM:CE - Component approval mechanical:CE
COOL:AIR - Cooling:Air cooled
IDRY:N - Integrated dryer:No
MOVOL:230V - Supply voltage:230 V
MOVOL:460V - Supply voltage:460 V
CAPPRM:AS1210 - Component approval mechanical:AS1210
CAPPRM:MHLW - Component approval mechanical:MHLW
FREQ:50HZ - Frequency:50 Hz
MODEL:GA110VP_16 - Model:GA 110VSD+
MOVOL:380V - Supply voltage:380 V
MOVOL:500V - Supply voltage:500 V

21.24 - Cubicle components GA 110 VSD+ - (200V-380V-460V/60Hz - IEC, 230V-460V-575V/60Hz - UL-cUL, 200V-400V-500V/50Hz - IEC) - Pack (12/12/2018 - 04/02/2020)

((((CAPPRM:AS1210 , CAPPRM:CE , CAPPRM:MHLW , CAPPRM:MOM) + MOVOL:400V , CAPPRM:CE + COOL:AIR + MOVOL:500V) + FREQ:50HZ , ((MOVOL:380V , MOVOL:460V) + CAPPRM:ASME , CAPPRM:MHLW + MOVOL:460V) + FREQ:60HZ) + CAPPRE:IEC , (COOL:AIR + MOVOL:575V , MOVOL:460V) + CAPPRE:ULCUL + CAPPRM:ASME + FREQ:60HZ) + IDRY:N + MODEL:GA110VP_16

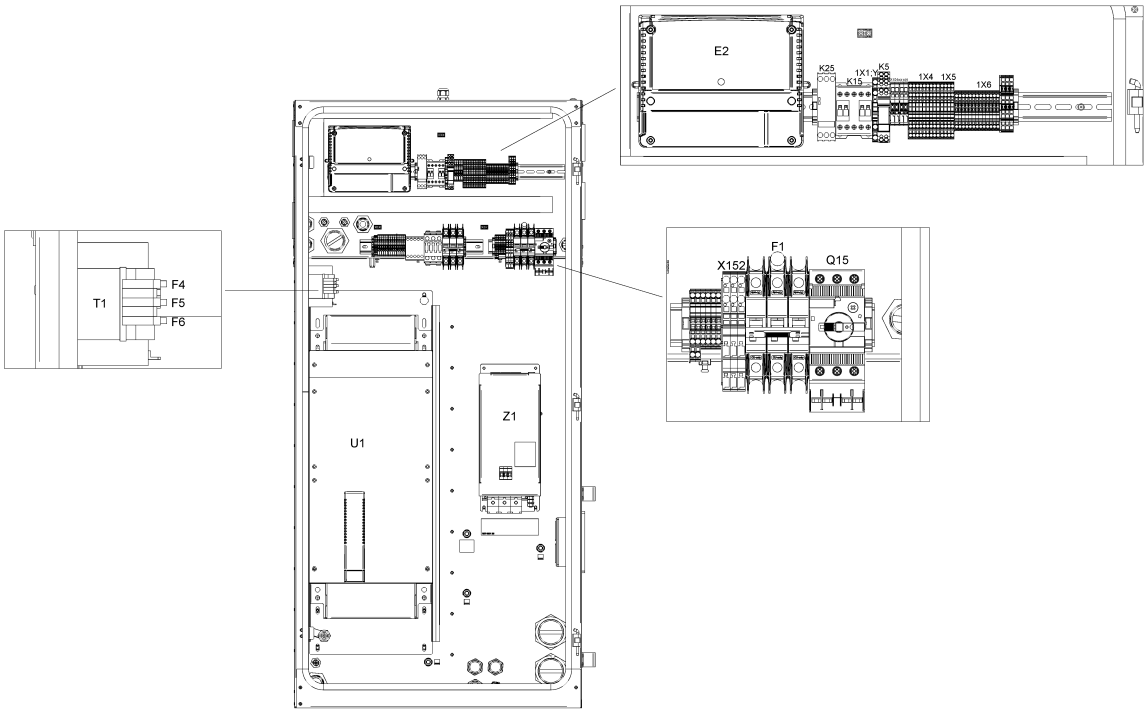

21.24 - Cubicle components GA 110 VSD+ - (200V-380V-460V/60Hz - IEC, 230V-460V-575V/60Hz - UL-cUL, 200V-400V-500V/50Hz - IEC) - Pack (12/12/2018 - 04/02/2020)

((((CAPPRM:AS1210 , CAPPRM:CE , CAPPRM:MHLW , CAPPRM:MOM) + MOVOL:400V , CAPPRM:CE + COOL:AIR + MOVOL:500V) + FREQ:50HZ , ((MOVOL:380V , MOVOL:460V) + CAPPRM:ASME , CAPPRM:MHLW + MOVOL:460V) + FREQ:60HZ) + CAPPRE:IEC , (COOL:AIR + MOVOL:575V , MOVOL:460V) + CAPPRE:ULCUL + CAPPRM:ASME + FREQ:60HZ) + IDRY:N + MODEL:GA110VP_16

Ref	Part Number	Qty	Name	Validity	EL
	0989 3700 47	1	LOCKNUT	**(12/12/2018 - 24/02/2019)** ((((CAPPRM:AS1210 , CAPPRM:CE , CAPPRM:MHLW , CAPPRM:MOM) + MOVOL:400V , CAPPRM:CE + COOL:AIR + MOVOL:500V) + FREQ:50HZ , ((MOVOL:380V , MOVOL:460V) + CAPPRM:ASME , CAPPRM:MHLW + MOVOL:460V) + FREQ:60HZ , CAPPRM:MHLW + COOL:AIR + MOVOL:200V) + CAPPRE:IEC , ((MOVOL:230V , MOVOL:575V) + COOL:AIR , MOVOL:460V) + CAPPRE:ULCUL + CAPPRM:ASME + FREQ:60HZ) **(25/02/2019 - 04/02/2020)** ((((CAPPRM:AS1210 , CAPPRM:CE , CAPPRM:MHLW , CAPPRM:MOM) + MOVOL:400V , CAPPRM:CE + MOVOL:500V , CAPPRM:MHLW + MOVOL:200V) + FREQ:50HZ , ((MOVOL:200V , MOVOL:460V) + CAPPRM:MHLW , (MOVOL:380V , MOVOL:460V) + CAPPRM:ASME) + FREQ:60HZ) + CAPPRE:IEC , (MOVOL:230V , MOVOL:460V , MOVOL:575V) + CAPPRE:ULCUL + CAPPRM:ASME + FREQ:60HZ) + COOL:AIR **(05/02/2020 - 30/12/2027)** (CAPPRE:IEC + CAPPRM:MHLW + MOVOL:200V , CAPPRE:ULCUL + CAPPRM:ASME + FREQ:60HZ + MOVOL:230V) + COOL:AIR	
	Electrical legend:	Locknut for dryer			
	0697 9811 11	2	PLUG	**(12/12/2018 - 24/02/2019)** ((((CAPPRM:AS1210 , CAPPRM:CE , CAPPRM:MHLW , CAPPRM:MOM) + MOVOL:400V , CAPPRM:CE + COOL:AIR + MOVOL:500V) + FREQ:50HZ , ((MOVOL:380V , MOVOL:460V) + CAPPRM:ASME , CAPPRM:MHLW + MOVOL:460V) + FREQ:60HZ , CAPPRM:MHLW + COOL:AIR + MOVOL:200V) + CAPPRE:IEC , ((MOVOL:230V , MOVOL:575V) + COOL:AIR , MOVOL:460V) + CAPPRE:ULCUL + CAPPRM:ASME + FREQ:60HZ) **(25/02/2019 - 04/02/2020)** ((((CAPPRM:AS1210 , CAPPRM:CE , CAPPRM:MHLW , CAPPRM:MOM) + MOVOL:400V , CAPPRM:CE + MOVOL:500V , CAPPRM:MHLW + MOVOL:200V) + FREQ:50HZ , ((MOVOL:200V , MOVOL:460V) + CAPPRM:MHLW , (MOVOL:380V , MOVOL:460V) + CAPPRM:ASME) + FREQ:60HZ) + CAPPRE:IEC , (MOVOL:230V , MOVOL:460V , MOVOL:575V) + CAPPRE:ULCUL + CAPPRM:ASME + FREQ:60HZ) + COOL:AIR **(05/02/2020 - 30/12/2027)** (CAPPRE:IEC + CAPPRM:MHLW + MOVOL:200V , CAPPRE:ULCUL + CAPPRM:ASME + FREQ:60HZ + MOVOL:230V) + COOL:AIR	
	Electrical legend:	Plug for FF Drain/LAT			

Legend:

CAPPRE:IEC - Component approval electrical:IEC
CAPPRM:ASME - Component approval mechanical:ASME
CAPPRM:MOM - Component approval mechanical:MOM
FREQ:60HZ - Frequency:60 Hz
MOVOL:200V - Supply voltage:200 V
MOVOL:400V - Supply voltage:400 V
MOVOL:575V - Supply voltage:575 V
CAPPRE:ULCUL - Component approval electrical:UL/cUL
CAPPRM:CE - Component approval mechanical:CE
COOL:AIR - Cooling:Air cooled
IDRY:N - Integrated dryer:No
MOVOL:230V - Supply voltage:230 V
MOVOL:460V - Supply voltage:460 V
CAPPRM:AS1210 - Component approval mechanical:AS1210
CAPPRM:MHLW - Component approval mechanical:MHLW
FREQ:50HZ - Frequency:50 Hz
MODEL:GA110VP_16 - Model:GA 110VSD+
MOVOL:380V - Supply voltage:380 V
MOVOL:500V - Supply voltage:500 V

21.24 - Cubicle components GA 110 VSD+ - (200V-380V-460V/60Hz - IEC, 230V-460V-575V/60Hz - UL-cUL, 200V-400V-500V/50Hz - IEC) - Pack (12/12/2018 - 04/02/2020)

((((CAPPRM:AS1210 , CAPPRM:CE , CAPPRM:MHLW , CAPPRM:MOM) + MOVOL:400V , CAPPRM:CE + COOL:AIR + MOVOL:500V) + FREQ:50HZ , ((MOVOL:380V , MOVOL:460V) + CAPPRM:ASME , CAPPRM:MHLW + MOVOL:460V) + FREQ:60HZ) + CAPPRE:IEC , (COOL:AIR + MOVOL:575V , MOVOL:460V) + CAPPRE:ULCUL + CAPPRM:ASME + FREQ:60HZ) + IDRY:N + MODEL:GA110VP_16

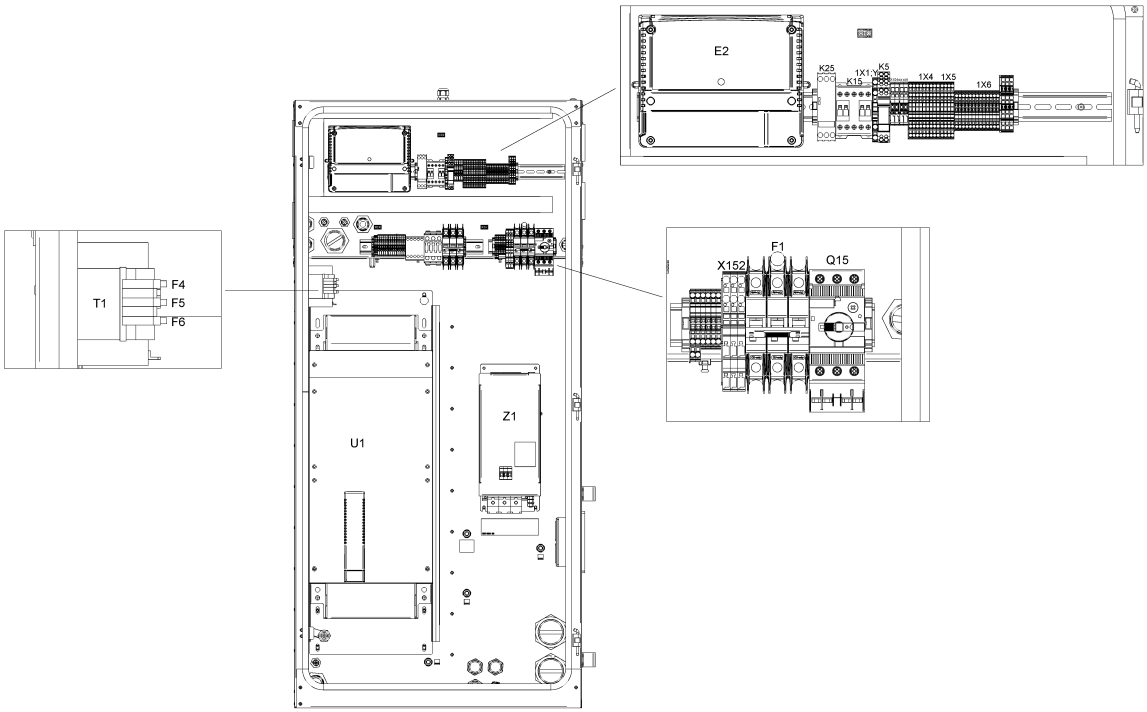

Ref	Part Number	Qty	Name	Validity	EL
	0989 3700 42	2	NUT	**(12/12/2018 - 24/02/2019)** ((((CAPPRM:AS1210 , CAPPRM:CE , CAPPRM:MHLW , CAPPRM:MOM) + MOVOL:400V , CAPPRM:CE + COOL:AIR + MOVOL:500V) + FREQ:50HZ , ((MOVOL:380V , MOVOL:460V) + CAPPRM:ASME , CAPPRM:MHLW + MOVOL:460V) + FREQ:60HZ , CAPPRM:MHLW + COOL:AIR + MOVOL:200V) + CAPPRE:IEC , ((MOVOL:230V , MOVOL:575V) + COOL:AIR , MOVOL:460V) + CAPPRE:ULCUL + CAPPRM:ASME + FREQ:60HZ) **(25/02/2019 - 04/02/2020)** ((((CAPPRM:AS1210 , CAPPRM:CE , CAPPRM:MHLW , CAPPRM:MOM) + MOVOL:400V , CAPPRM:CE + MOVOL:500V , CAPPRM:MHLW + MOVOL:200V) + FREQ:50HZ , ((MOVOL:200V , MOVOL:460V) + CAPPRM:MHLW , (MOVOL:380V , MOVOL:460V) + CAPPRM:ASME) + FREQ:60HZ) + CAPPRE:IEC , (MOVOL:230V , MOVOL:460V , MOVOL:575V) + CAPPRE:ULCUL + CAPPRM:ASME + FREQ:60HZ) + COOL:AIR **(05/02/2020 - 30/12/2027)** (CAPPRE:IEC + CAPPRM:MHLW + MOVOL:200V , CAPPRE:ULCUL + CAPPRM:ASME + FREQ:60HZ + MOVOL:230V) + COOL:AIR	
	Electrical legend:	Locknut for FF Drain/LAT			
	1088 0031 13	1	CONNECTOR 13-POLE	**(12/12/2018 - 24/02/2019)** ((((CAPPRM:AS1210 , CAPPRM:CE , CAPPRM:MHLW , CAPPRM:MOM) + MOVOL:400V , CAPPRM:CE + COOL:AIR + MOVOL:500V) + FREQ:50HZ , ((MOVOL:380V , MOVOL:460V) + CAPPRM:ASME , CAPPRM:MHLW + MOVOL:460V) + FREQ:60HZ , CAPPRM:MHLW + COOL:AIR + MOVOL:200V) + CAPPRE:IEC , ((MOVOL:230V , MOVOL:575V) + COOL:AIR , MOVOL:460V) + CAPPRE:ULCUL + CAPPRM:ASME + FREQ:60HZ) **(25/02/2019 - 04/02/2020)** ((((CAPPRM:AS1210 , CAPPRM:CE , CAPPRM:MHLW , CAPPRM:MOM) + MOVOL:400V , CAPPRM:CE + MOVOL:500V , CAPPRM:MHLW + MOVOL:200V) + FREQ:50HZ , ((MOVOL:200V , MOVOL:460V) + CAPPRM:MHLW , (MOVOL:380V , MOVOL:460V) + CAPPRM:ASME) + FREQ:60HZ) + CAPPRE:IEC , (MOVOL:230V , MOVOL:460V , MOVOL:575V) + CAPPRE:ULCUL + CAPPRM:ASME + FREQ:60HZ) + COOL:AIR **(05/02/2020 - 30/12/2027)** (CAPPRE:IEC + CAPPRM:MHLW + MOVOL:200V , CAPPRE:ULCUL + CAPPRM:ASME + FREQ:60HZ + MOVOL:230V) + COOL:AIR	1X30

Legend:

CAPPRE:IEC - Component approval electrical:IEC
CAPPRE:ULCUL - Component approval electrical:UL/cUL
CAPPRM:AS1210 - Component approval mechanical:AS1210
CAPPRM:ASME - Component approval mechanical:ASME
CAPPRM:CE - Component approval mechanical:CE
CAPPRM:MHLW - Component approval mechanical:MHLW
CAPPRM:MOM - Component approval mechanical:MOM
COOL:AIR - Cooling:Air cooled
FREQ:50HZ - Frequency:50 Hz
FREQ:60HZ - Frequency:60 Hz
IDRY:N - Integrated dryer:No
MODEL:GA110VP_16 - Model:GA 110VSD+
MOVOL:200V - Supply voltage:200 V
MOVOL:230V - Supply voltage:230 V
MOVOL:380V - Supply voltage:380 V
MOVOL:400V - Supply voltage:400 V
MOVOL:460V - Supply voltage:460 V
MOVOL:500V - Supply voltage:500 V
MOVOL:575V - Supply voltage:575 V

21.24 - Cubicle components GA 110 VSD+ - (200V-380V-460V/60Hz - IEC, 230V-460V-575V/60Hz - UL-cUL, 200V-400V-500V/50Hz - IEC) - Pack (12/12/2018 - 04/02/2020)

((((CAPPRM:AS1210 , CAPPRM:CE , CAPPRM:MHLW , CAPPRM:MOM) + MOVOL:400V , CAPPRM:CE + COOL:AIR + MOVOL:500V) + FREQ:50HZ , ((MOVOL:380V , MOVOL:460V) + CAPPRM:ASME , CAPPRM:MHLW + MOVOL:460V) + FREQ:60HZ) + CAPPRE:IEC , (COOL:AIR + MOVOL:575V , MOVOL:460V) + CAPPRE:ULCUL + CAPPRM:ASME + FREQ:60HZ) + IDRY:N + MODEL:GA110VP_16

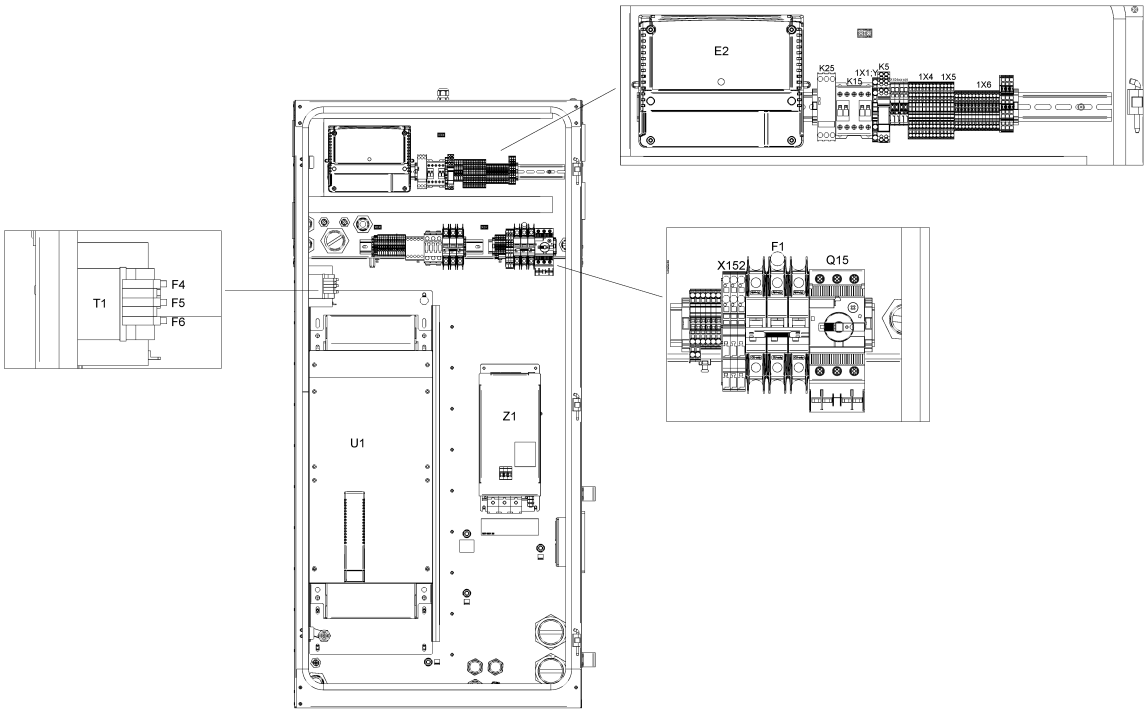

21.24 - Cubicle components GA 110 VSD+ - (200V-380V-460V/60Hz - IEC, 230V-460V-575V/60Hz - UL-cUL, 200V-400V-500V/50Hz - IEC) - Pack (12/12/2018 - 04/02/2020)

((((CAPPRM:AS1210 , CAPPRM:CE , CAPPRM:MHLW , CAPPRM:MOM) + MOVOL:400V , CAPPRM:CE + COOL:AIR + MOVOL:500V) + FREQ:50HZ , ((MOVOL:380V , MOVOL:460V) + CAPPRM:ASME , CAPPRM:MHLW + MOVOL:460V) + FREQ:60HZ) + CAPPRE:IEC , (COOL:AIR + MOVOL:575V , MOVOL:460V) + CAPPRE:ULCUL + CAPPRM:ASME + FREQ:60HZ) + IDRY:N + MODEL:GA110VP_16

Ref	Part Number	Qty	Name	Validity	EL
	1088 0037 82	1	CONNECTOR	**(12/12/2018 - 24/02/2019)** ((((CAPPRM:AS1210 , CAPPRM:CE , CAPPRM:MHLW , CAPPRM:MOM) + MOVOL:400V , CAPPRM:CE + COOL:AIR + MOVOL:500V) + FREQ:50HZ , ((MOVOL:380V , MOVOL:460V) + CAPPRM:ASME , CAPPRM:MHLW + MOVOL:460V) + FREQ:60HZ , CAPPRM:MHLW + COOL:AIR + MOVOL:200V) + CAPPRE:IEC , ((MOVOL:230V , MOVOL:575V) + COOL:AIR , MOVOL:460V) + CAPPRE:ULCUL + CAPPRM:ASME + FREQ:60HZ) **(25/02/2019 - 04/02/2020)** ((((CAPPRM:AS1210 , CAPPRM:CE , CAPPRM:MHLW , CAPPRM:MOM) + MOVOL:400V , CAPPRM:CE + MOVOL:500V , CAPPRM:MHLW + MOVOL:200V) + FREQ:50HZ , ((MOVOL:200V , MOVOL:460V) + CAPPRM:MHLW , (MOVOL:380V , MOVOL:460V) + CAPPRM:ASME) + FREQ:60HZ) + CAPPRE:IEC , (MOVOL:230V , MOVOL:460V , MOVOL:575V) + CAPPRE:ULCUL + CAPPRM:ASME + FREQ:60HZ) + COOL:AIR **(05/02/2020 - 30/12/2027)** (CAPPRE:IEC + CAPPRM:MHLW + MOVOL:200V , CAPPRE:ULCUL + CAPPRM:ASME + FREQ:60HZ + MOVOL:230V) + COOL:AIR	3X34
	0697 9811 13	1	PLUG	**(12/12/2018 - 24/02/2019)** ((((CAPPRM:AS1210 , CAPPRM:CE , CAPPRM:MHLW , CAPPRM:MOM) + MOVOL:400V , CAPPRM:CE + COOL:AIR + MOVOL:500V) + FREQ:50HZ , ((MOVOL:380V , MOVOL:460V) + CAPPRM:ASME , CAPPRM:MHLW + MOVOL:460V) + FREQ:60HZ , CAPPRM:MHLW + COOL:AIR + MOVOL:200V) + CAPPRE:IEC , ((MOVOL:230V , MOVOL:575V) + COOL:AIR , MOVOL:460V) + CAPPRE:ULCUL + CAPPRM:ASME + FREQ:60HZ) **(25/02/2019 - 04/02/2020)** ((((CAPPRM:AS1210 , CAPPRM:CE , CAPPRM:MHLW , CAPPRM:MOM) + MOVOL:400V , CAPPRM:CE + MOVOL:500V , CAPPRM:MHLW + MOVOL:200V) + FREQ:50HZ , ((MOVOL:200V , MOVOL:460V) + CAPPRM:MHLW , (MOVOL:380V , MOVOL:460V) + CAPPRM:ASME) + FREQ:60HZ) + CAPPRE:IEC , (MOVOL:230V , MOVOL:460V , MOVOL:575V) + CAPPRE:ULCUL + CAPPRM:ASME + FREQ:60HZ) + COOL:AIR **(05/02/2020 - 30/12/2027)** (CAPPRE:IEC + CAPPRM:MHLW + MOVOL:200V , CAPPRE:ULCUL + CAPPRM:ASME + FREQ:60HZ + MOVOL:230V) + COOL:AIR	

Electrical legend: Energy recovery

Legend:

CAPPRE:IEC - Component approval electrical:IEC
CAPPRE:ULCUL - Component approval electrical:UL/cUL
CAPPRM:AS1210 - Component approval mechanical:AS1210
CAPPRM:ASME - Component approval mechanical:ASME
CAPPRM:CE - Component approval mechanical:CE
CAPPRM:MHLW - Component approval mechanical:MHLW
CAPPRM:MOM - Component approval mechanical:MOM
COOL:AIR - Cooling:Air cooled
FREQ:50HZ - Frequency:50 Hz
FREQ:60HZ - Frequency:60 Hz
IDRY:N - Integrated dryer:No
MODEL:GA110VP_16 - Model:GA 110VSD+
MOVOL:200V - Supply voltage:200 V
MOVOL:230V - Supply voltage:230 V
MOVOL:380V - Supply voltage:380 V
MOVOL:400V - Supply voltage:400 V
MOVOL:460V - Supply voltage:460 V
MOVOL:500V - Supply voltage:500 V
MOVOL:575V - Supply voltage:575 V

21.24 - Cubicle components GA 110 VSD+ - (200V-380V-460V/60Hz - IEC, 230V-460V-575V/60Hz - UL-cUL, 200V-400V-500V/50Hz - IEC) - Pack (12/12/2018 - 04/02/2020)

((((CAPPRM:AS1210 , CAPPRM:CE , CAPPRM:MHLW , CAPPRM:MOM) + MOVOL:400V , CAPPRM:CE + COOL:AIR + MOVOL:500V) + FREQ:50HZ , ((MOVOL:380V , MOVOL:460V) + CAPPRM:ASME , CAPPRM:MHLW + MOVOL:460V) + FREQ:60HZ) + CAPPRE:IEC , (COOL:AIR + MOVOL:575V , MOVOL:460V) + CAPPRE:ULCUL + CAPPRM:ASME + FREQ:60HZ) + IDRY:N + MODEL:GA110VP_16

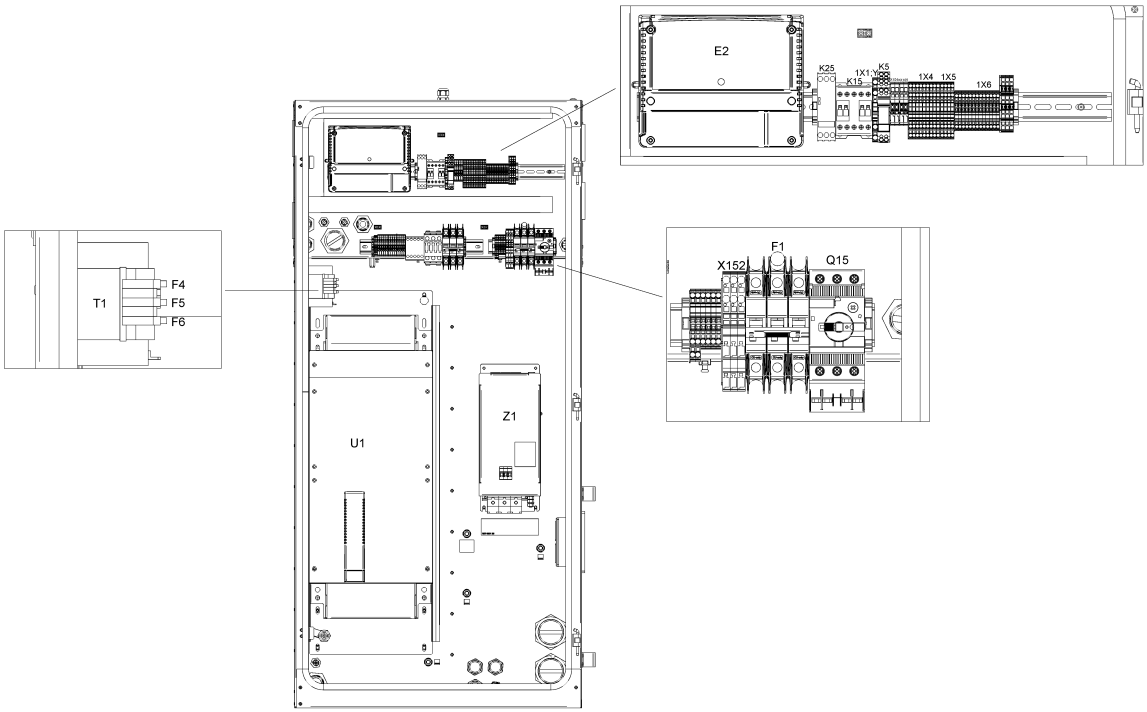

21.24 - Cubicle components GA 110 VSD+ - (200V-380V-460V/60Hz - IEC, 230V-460V-575V/60Hz - UL-cUL, 200V-400V-500V/50Hz - IEC) - Pack (12/12/2018 - 04/02/2020)

((((CAPPRM:AS1210 , CAPPRM:CE , CAPPRM:MHLW , CAPPRM:MOM) + MOVOL:400V , CAPPRM:CE + COOL:AIR + MOVOL:500V) + FREQ:50HZ , ((MOVOL:380V , MOVOL:460V) + CAPPRM:ASME , CAPPRM:MHLW + MOVOL:460V) + FREQ:60HZ) + CAPPRE:IEC , (COOL:AIR + MOVOL:575V , MOVOL:460V) + CAPPRE:ULCUL + CAPPRM:ASME + FREQ:60HZ) + IDRY:N + MODEL:GA110VP_16

Ref	Part Number	Qty	Name	Validity	EL
	0989 3700 44	1	LOCKNUT	**(12/12/2018 - 24/02/2019)** ((((CAPPRM:AS1210 , CAPPRM:CE , CAPPRM:MHLW , CAPPRM:MOM) + MOVOL:400V , CAPPRM:CE + COOL:AIR + MOVOL:500V) + FREQ:50HZ , ((MOVOL:380V , MOVOL:460V) + CAPPRM:ASME , CAPPRM:MHLW + MOVOL:460V) + FREQ:60HZ , CAPPRM:MHLW + COOL:AIR + MOVOL:200V) + CAPPRE:IEC , ((MOVOL:230V , MOVOL:575V) + COOL:AIR , MOVOL:460V) + CAPPRE:ULCUL + CAPPRM:ASME + FREQ:60HZ) **(25/02/2019 - 04/02/2020)** ((((CAPPRM:AS1210 , CAPPRM:CE , CAPPRM:MHLW , CAPPRM:MOM) + MOVOL:400V , CAPPRM:CE + MOVOL:500V , CAPPRM:MHLW + MOVOL:200V) + FREQ:50HZ , ((MOVOL:200V , MOVOL:460V) + CAPPRM:MHLW , (MOVOL:380V , MOVOL:460V) + CAPPRM:ASME) + FREQ:60HZ) + CAPPRE:IEC , (MOVOL:230V , MOVOL:460V , MOVOL:575V) + CAPPRE:ULCUL + CAPPRM:ASME + FREQ:60HZ) + COOL:AIR **(05/02/2020 - 30/12/2027)** (CAPPRE:IEC + CAPPRM:MHLW + MOVOL:200V , CAPPRE:ULCUL + CAPPRM:ASME + FREQ:60HZ + MOVOL:230V) + COOL:AIR	
	Electrical legend:	Energy recovery			
	0697 9811 12	1	PLUG0	**(12/12/2018 - 24/02/2019)** ((((CAPPRM:AS1210 , CAPPRM:CE , CAPPRM:MHLW , CAPPRM:MOM) + MOVOL:400V , CAPPRM:CE + COOL:AIR + MOVOL:500V) + FREQ:50HZ , ((MOVOL:380V , MOVOL:460V) + CAPPRM:ASME , CAPPRM:MHLW + MOVOL:460V) + FREQ:60HZ , CAPPRM:MHLW + COOL:AIR + MOVOL:200V) + CAPPRE:IEC , ((MOVOL:230V , MOVOL:575V) + COOL:AIR , MOVOL:460V) + CAPPRE:ULCUL + CAPPRM:ASME + FREQ:60HZ) **(25/02/2019 - 04/02/2020)** ((((CAPPRM:AS1210 , CAPPRM:CE , CAPPRM:MHLW , CAPPRM:MOM) + MOVOL:400V , CAPPRM:CE + MOVOL:500V , CAPPRM:MHLW + MOVOL:200V) + FREQ:50HZ , ((MOVOL:200V , MOVOL:460V) + CAPPRM:MHLW , (MOVOL:380V , MOVOL:460V) + CAPPRM:ASME) + FREQ:60HZ) + CAPPRE:IEC , (MOVOL:230V , MOVOL:460V , MOVOL:575V) + CAPPRE:ULCUL + CAPPRM:ASME + FREQ:60HZ) + COOL:AIR **(05/02/2020 - 30/12/2027)** (CAPPRE:IEC + CAPPRM:MHLW + MOVOL:200V , CAPPRE:ULCUL + CAPPRM:ASME + FREQ:60HZ + MOVOL:230V) + COOL:AIR	
	Electrical legend:	Control circuit of T10			

Legend:

CAPPRE:IEC - Component approval electrical:IEC
CAPPRE:ULCUL - Component approval electrical:UL/cUL
CAPPRM:AS1210 - Component approval mechanical:AS1210
CAPPRM:ASME - Component approval mechanical:ASME
CAPPRM:CE - Component approval mechanical:CE
CAPPRM:MHLW - Component approval mechanical:MHLW
CAPPRM:MOM - Component approval mechanical:MOM
COOL:AIR - Cooling:Air cooled
FREQ:50HZ - Frequency:50 Hz
FREQ:60HZ - Frequency:60 Hz
IDRY:N - Integrated dryer:No
MODEL:GA110VP_16 - Model:GA 110VSD+
MOVOL:200V - Supply voltage:200 V
MOVOL:230V - Supply voltage:230 V
MOVOL:380V - Supply voltage:380 V
MOVOL:400V - Supply voltage:400 V
MOVOL:460V - Supply voltage:460 V
MOVOL:500V - Supply voltage:500 V
MOVOL:575V - Supply voltage:575 V

21.24 - Cubicle components GA 110 VSD+ - (200V-380V-460V/60Hz - IEC, 230V-460V-575V/60Hz - UL-cUL, 200V-400V-500V/50Hz - IEC) - Pack (12/12/2018 - 04/02/2020)

((((CAPPRM:AS1210 , CAPPRM:CE , CAPPRM:MHLW , CAPPRM:MOM) + MOVOL:400V , CAPPRM:CE + COOL:AIR + MOVOL:500V) + FREQ:50HZ , ((MOVOL:380V , MOVOL:460V) + CAPPRM:ASME , CAPPRM:MHLW + MOVOL:460V) + FREQ:60HZ) + CAPPRE:IEC , (COOL:AIR + MOVOL:575V , MOVOL:460V) + CAPPRE:ULCUL + CAPPRM:ASME + FREQ:60HZ) + IDRY:N + MODEL:GA110VP_16

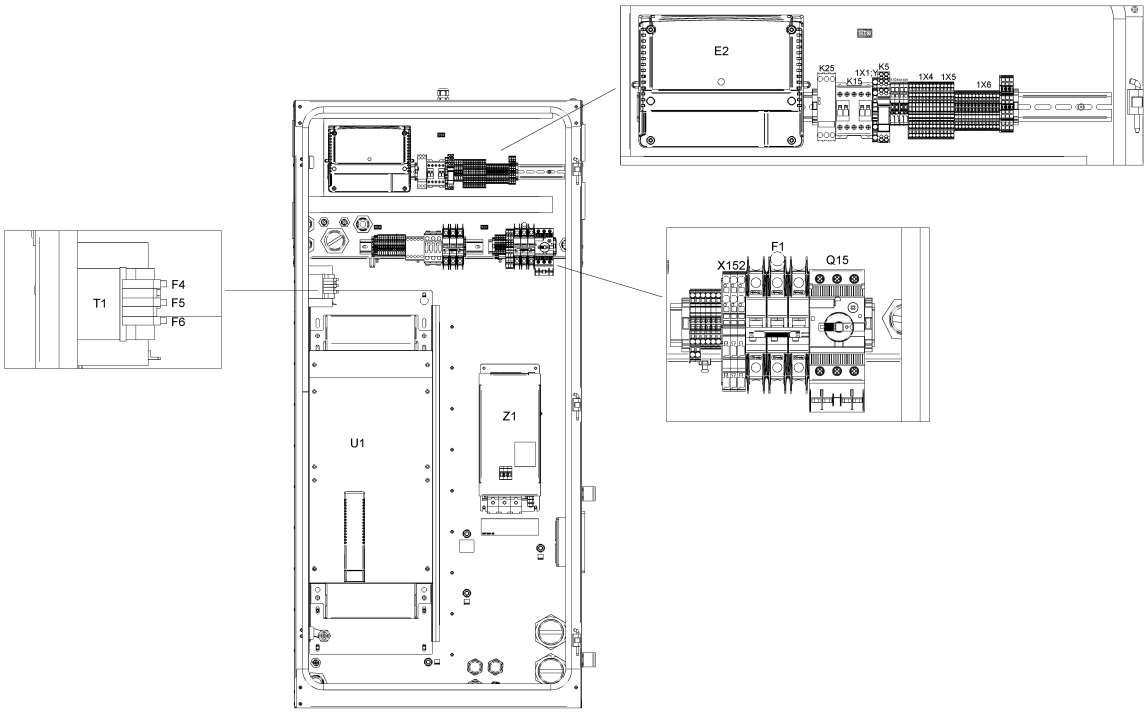

Ref	Part Number	Qty	Name	Validity	EL
	0989 3700 43	1	NUT	**(12/12/2018 - 24/02/2019)** ((((CAPPRM:AS1210 , CAPPRM:CE , CAPPRM:MHLW , CAPPRM:MOM) + MOVOL:400V , CAPPRM:CE + COOL:AIR + MOVOL:500V) + FREQ:50HZ , ((MOVOL:380V , MOVOL:460V) + CAPPRM:ASME , CAPPRM:MHLW + MOVOL:460V) + FREQ:60HZ , CAPPRM:MHLW + COOL:AIR + MOVOL:200V) + CAPPRE:IEC , ((MOVOL:230V , MOVOL:575V) + COOL:AIR , MOVOL:460V) + CAPPRE:ULCUL + CAPPRM:ASME + FREQ:60HZ) **(25/02/2019 - 04/02/2020)** ((((CAPPRM:AS1210 , CAPPRM:CE , CAPPRM:MHLW , CAPPRM:MOM) + MOVOL:400V , CAPPRM:CE + MOVOL:500V , CAPPRM:MHLW + MOVOL:200V) + FREQ:50HZ , ((MOVOL:200V , MOVOL:460V) + CAPPRM:MHLW , (MOVOL:380V , MOVOL:460V) + CAPPRM:ASME) + FREQ:60HZ) + CAPPRE:IEC , (MOVOL:230V , MOVOL:460V , MOVOL:575V) + CAPPRE:ULCUL + CAPPRM:ASME + FREQ:60HZ) + COOL:AIR **(05/02/2020 - 30/12/2027)** (CAPPRE:IEC + CAPPRM:MHLW + MOVOL:200V , CAPPRE:ULCUL + CAPPRM:ASME + FREQ:60HZ + MOVOL:230V) + COOL:AIR	
	Electrical legend:	Control circuit of T10			
	0697 9811 10	1	PLUG	**(12/12/2018 - 24/02/2019)** ((((CAPPRM:AS1210 , CAPPRM:CE , CAPPRM:MHLW , CAPPRM:MOM) + MOVOL:400V , CAPPRM:CE + COOL:AIR + MOVOL:500V) + FREQ:50HZ , ((MOVOL:380V , MOVOL:460V) + CAPPRM:ASME , CAPPRM:MHLW + MOVOL:460V) + FREQ:60HZ , CAPPRM:MHLW + COOL:AIR + MOVOL:200V) + CAPPRE:IEC , ((MOVOL:230V , MOVOL:575V) + COOL:AIR , MOVOL:460V) + CAPPRE:ULCUL + CAPPRM:ASME + FREQ:60HZ) **(25/02/2019 - 04/02/2020)** ((((CAPPRM:AS1210 , CAPPRM:CE , CAPPRM:MHLW , CAPPRM:MOM) + MOVOL:400V , CAPPRM:CE + MOVOL:500V , CAPPRM:MHLW + MOVOL:200V) + FREQ:50HZ , ((MOVOL:200V , MOVOL:460V) + CAPPRM:MHLW , (MOVOL:380V , MOVOL:460V) + CAPPRM:ASME) + FREQ:60HZ) + CAPPRE:IEC , (MOVOL:230V , MOVOL:460V , MOVOL:575V) + CAPPRE:ULCUL + CAPPRM:ASME + FREQ:60HZ) + COOL:AIR **(05/02/2020 - 30/12/2027)** (CAPPRE:IEC + CAPPRM:MHLW + MOVOL:200V , CAPPRE:ULCUL + CAPPRM:ASME + FREQ:60HZ + MOVOL:230V) + COOL:AIR	
	Electrical legend:	Plug for smartbox hole			

Legend:

CAPPRE:IEC - Component approval electrical:IEC
CAPPRE:ULCUL - Component approval electrical:UL/cUL
CAPPRM:AS1210 - Component approval mechanical:AS1210
CAPPRM:ASME - Component approval mechanical:ASME
CAPPRM:CE - Component approval mechanical:CE
CAPPRM:MHLW - Component approval mechanical:MHLW
CAPPRM:MOM - Component approval mechanical:MOM
COOL:AIR - Cooling:Air cooled
FREQ:50HZ - Frequency:50 Hz
FREQ:60HZ - Frequency:60 Hz
IDRY:N - Integrated dryer:No
MODEL:GA110VP_16 - Model:GA 110VSD+
MOVOL:200V - Supply voltage:200 V
MOVOL:230V - Supply voltage:230 V
MOVOL:380V - Supply voltage:380 V
MOVOL:400V - Supply voltage:400 V
MOVOL:460V - Supply voltage:460 V
MOVOL:500V - Supply voltage:500 V
MOVOL:575V - Supply voltage:575 V

21.24 - Cubicle components GA 110 VSD+ - (200V-380V-460V/60Hz - IEC, 230V-460V-575V/60Hz - UL-cUL, 200V-400V-500V/50Hz - IEC) - Pack (12/12/2018 - 04/02/2020)

((((CAPPRM:AS1210 , CAPPRM:CE , CAPPRM:MHLW , CAPPRM:MOM) + MOVOL:400V , CAPPRM:CE + COOL:AIR + MOVOL:500V) + FREQ:50HZ , ((MOVOL:380V , MOVOL:460V) + CAPPRM:ASME , CAPPRM:MHLW + MOVOL:460V) + FREQ:60HZ) + CAPPRE:IEC , (COOL:AIR + MOVOL:575V , MOVOL:460V) + CAPPRE:ULCUL + CAPPRM:ASME + FREQ:60HZ) + IDRY:N + MODEL:GA110VP_16

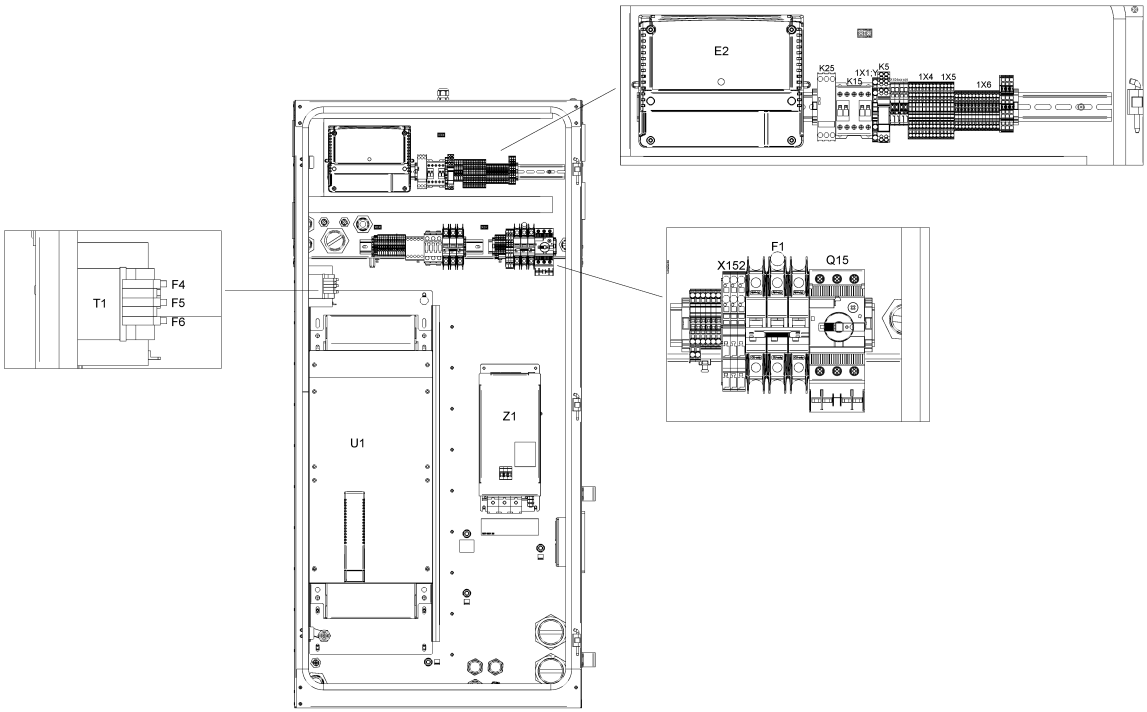

21.24 - Cubicle components GA 110 VSD+ - (200V-380V-460V/60Hz - IEC, 230V-460V-575V/60Hz - UL-cUL, 200V-400V-500V/50Hz - IEC) - Pack (12/12/2018 - 04/02/2020)

((((CAPPRM:AS1210 , CAPPRM:CE , CAPPRM:MHLW , CAPPRM:MOM) + MOVOL:400V , CAPPRM:CE + COOL:AIR + MOVOL:500V) + FREQ:50HZ , ((MOVOL:380V , MOVOL:460V) + CAPPRM:ASME , CAPPRM:MHLW + MOVOL:460V) + FREQ:60HZ) + CAPPRE:IEC , (COOL:AIR + MOVOL:575V , MOVOL:460V) + CAPPRE:ULCUL + CAPPRM:ASME + FREQ:60HZ) + IDRY:N + MODEL:GA110VP_16

Ref	Part Number	Qty	Name	Validity	EL
	0989 3700 41	1	LOCKNUT	**(12/12/2018 - 24/02/2019)** ((((CAPPRM:AS1210 , CAPPRM:CE , CAPPRM:MHLW , CAPPRM:MOM) + MOVOL:400V , CAPPRM:CE + COOL:AIR + MOVOL:500V) + FREQ:50HZ , ((MOVOL:380V , MOVOL:460V) + CAPPRM:ASME , CAPPRM:MHLW + MOVOL:460V) + FREQ:60HZ , CAPPRM:MHLW + COOL:AIR + MOVOL:200V) + CAPPRE:IEC , ((MOVOL:230V , MOVOL:575V) + COOL:AIR , MOVOL:460V) + CAPPRE:ULCUL + CAPPRM:ASME + FREQ:60HZ) **(25/02/2019 - 04/02/2020)** ((((CAPPRM:AS1210 , CAPPRM:CE , CAPPRM:MHLW , CAPPRM:MOM) + MOVOL:400V , CAPPRM:CE + MOVOL:500V , CAPPRM:MHLW + MOVOL:200V) + FREQ:50HZ , ((MOVOL:200V , MOVOL:460V) + CAPPRM:MHLW , (MOVOL:380V , MOVOL:460V) + CAPPRM:ASME) + FREQ:60HZ) + CAPPRE:IEC , (MOVOL:230V , MOVOL:460V , MOVOL:575V) + CAPPRE:ULCUL + CAPPRM:ASME + FREQ:60HZ) + COOL:AIR **(05/02/2020 - 30/12/2027)** (CAPPRE:IEC + CAPPRM:MHLW + MOVOL:200V , CAPPRE:ULCUL + CAPPRM:ASME + FREQ:60HZ + MOVOL:230V) + COOL:AIR	
	Electrical legend:		Nut for smartbox hole		

Legend:

CAPPRE:IEC - Component approval electrical:IEC
CAPPRM:ASME - Component approval mechanical:ASME
CAPPRM:MOM - Component approval mechanical:MOM
FREQ:60HZ - Frequency:60 Hz
MOVOL:200V - Supply voltage:200 V
MOVOL:400V - Supply voltage:400 V
MOVOL:575V - Supply voltage:575 V
CAPPRE:ULCUL - Component approval electrical:UL/cUL
CAPPRM:CE - Component approval mechanical:CE
COOL:AIR - Cooling:Air cooled
IDRY:N - Integrated dryer:No
MOVOL:230V - Supply voltage:230 V
MOVOL:460V - Supply voltage:460 V
CAPPRM:AS1210 - Component approval mechanical:AS1210
CAPPRM:MHLW - Component approval mechanical:MHLW
FREQ:50HZ - Frequency:50 Hz
MODEL:GA110VP_16 - Model:GA 110VSD+
MOVOL:380V - Supply voltage:380 V
MOVOL:500V - Supply voltage:500 V

21.25 - Cubicle components GA 110 VSD+ - (200V-380V-460V/60Hz - IEC, 230V-460V-575V/60Hz - UL-cUL, 200V-400V-500V/50Hz - IEC) - Pack (05/02/2020 - ...)

((((CAPPRM:AS1210 , CAPPRM:CE , CAPPRM:MHLW , CAPPRM:MOM) + MOVOL:400V , CAPPRM:CE + COOL:AIR + MOVOL:500V) + FREQ:50HZ , ((MOVOL:380V , MOVOL:460V) + CAPPRM:ASME , CAPPRM:MHLW + MOVOL:460V) + FREQ:60HZ) + CAPPRE:IEC , (COOL:AIR + MOVOL:575V , MOVOL:460V) + CAPPRE:ULCUL + CAPPRM:ASME + FREQ:60HZ) + IDRY:N + MODEL:GA110VP_16

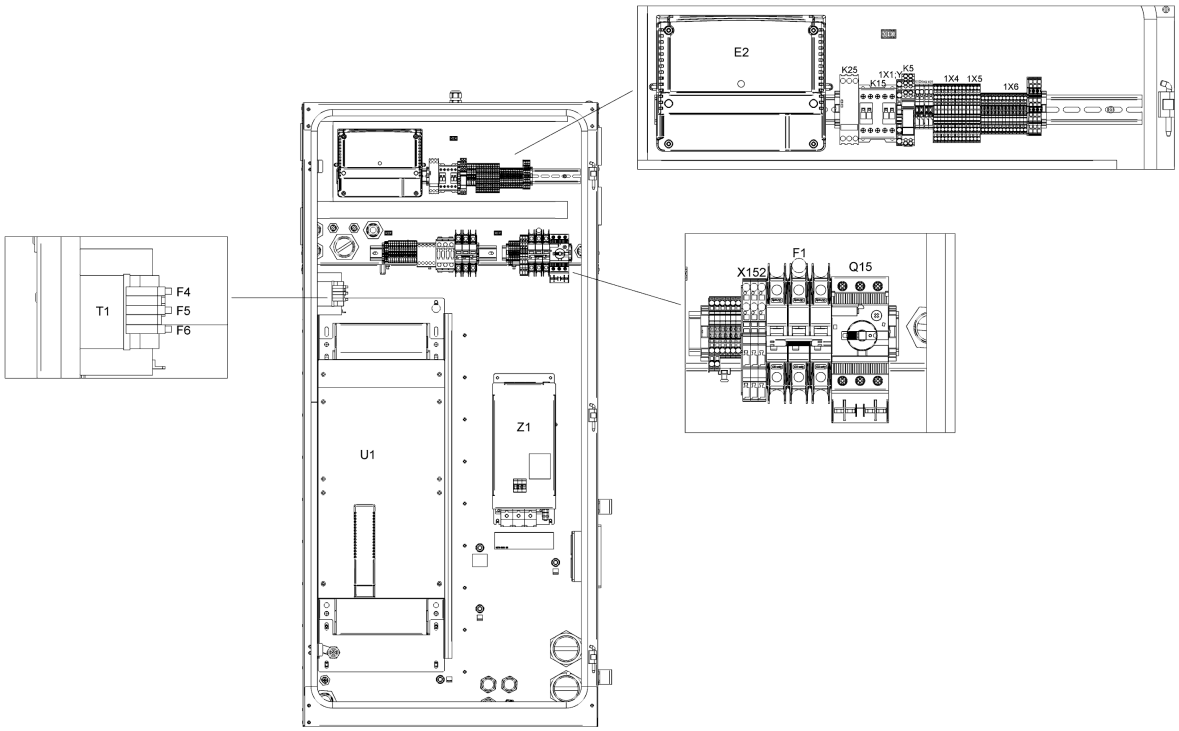

21.25 - Cubicle components GA 110 VSD+ - (200V-380V-460V/60Hz - IEC, 230V-460V-575V/60Hz - UL-cUL, 200V-400V-500V/50Hz - IEC) - Pack (05/02/2020 - ...)

((((CAPPRM:AS1210 , CAPPRM:CE , CAPPRM:MHLW , CAPPRM:MOM) + MOVOL:400V , CAPPRM:CE + COOL:AIR + MOVOL:500V) + FREQ:50HZ , ((MOVOL:380V , MOVOL:460V) + CAPPRM:ASME , CAPPRM:MHLW + MOVOL:460V) + FREQ:60HZ) + CAPPRE:IEC , (COOL:AIR + MOVOL:575V , MOVOL:460V) + CAPPRE:ULCUL + CAPPRM:ASME + FREQ:60HZ) + IDRY:N + MODEL:GA110VP_16

Ref	Part Number	Qty	Name	Validity	EL
	1900 2202 52	1	CUBICLE	**(05/02/2020 - ...)**	
	9820 3000 31	1	ASSEMBLY DRAWING	**(25/02/2019 - 04/02/2020)** ((((MOVOL:380V , MOVOL:460V) + CAPPRM:ASME , CAPPRM:MHLW + MOVOL:460V) + FREQ:60HZ , (CAPPRM:AS1210 , CAPPRM:CE , CAPPRM:MHLW , CAPPRM:MOM) + FREQ:50HZ + MOVOL:400V) + CAPPRE:IEC , CAPPRE:ULCUL + CAPPRM:ASME + FREQ:60HZ + MOVOL:460V) + COOL:WATER **(05/02/2020 - ...)**	AD
	9820 3000 27	1	SERVICE DIAGRAM	**(25/02/2019 - 04/02/2020)** ((((MOVOL:380V , MOVOL:460V) + CAPPRM:ASME , CAPPRM:MHLW + MOVOL:460V) + FREQ:60HZ , (CAPPRM:AS1210 , CAPPRM:CE , CAPPRM:MHLW , CAPPRM:MOM) + FREQ:50HZ + MOVOL:400V) + CAPPRE:IEC , CAPPRE:ULCUL + CAPPRM:ASME + FREQ:60HZ + MOVOL:460V) + COOL:WATER **(05/02/2020 - ...)**	SD
	1622 3798 72	1	WIRE HARNESS	**(25/02/2019 - 04/02/2020)** ((((MOVOL:380V , MOVOL:460V) + CAPPRM:ASME , CAPPRM:MHLW + MOVOL:460V) + FREQ:60HZ , (CAPPRM:AS1210 , CAPPRM:CE , CAPPRM:MHLW , CAPPRM:MOM) + FREQ:50HZ + MOVOL:400V) + CAPPRE:IEC , CAPPRE:ULCUL + CAPPRM:ASME + FREQ:60HZ + MOVOL:460V) + COOL:WATER **(05/02/2020 - ...)**	Comm Cable
	1622 5099 04	1	DI CHANE CABLE (1400MM)	**(25/02/2019 - 04/02/2020)** ((((MOVOL:380V , MOVOL:460V) + CAPPRM:ASME , CAPPRM:MHLW + MOVOL:460V) + FREQ:60HZ , (CAPPRM:AS1210 , CAPPRM:CE , CAPPRM:MHLW , CAPPRM:MOM) + FREQ:50HZ + MOVOL:400V) + CAPPRE:IEC , CAPPRE:ULCUL + CAPPRM:ASME + FREQ:60HZ + MOVOL:460V) + COOL:WATER **(05/02/2020 - ...)**	
	Electrical legend:	Comm Cable Loose supply			
	1649 8006 00	1	CUBICLE MSA WATERCOOLED	**(25/02/2019 - 04/02/2020)** ((((MOVOL:380V , MOVOL:460V) + CAPPRM:ASME , CAPPRM:MHLW + MOVOL:460V) + FREQ:60HZ , (CAPPRM:AS1210 , CAPPRM:CE , CAPPRM:MHLW , CAPPRM:MOM) + FREQ:50HZ + MOVOL:400V) + CAPPRE:IEC , CAPPRE:ULCUL + CAPPRM:ASME + FREQ:60HZ + MOVOL:460V) + COOL:WATER **(05/02/2020 - ...)**	MSA
	1649 8001 31	1	PLATE NEOS "E"	**(25/02/2019 - 04/02/2020)** ((((MOVOL:380V , MOVOL:460V) + CAPPRM:ASME , CAPPRM:MHLW + MOVOL:460V) + FREQ:60HZ , (CAPPRM:AS1210 , CAPPRM:CE , CAPPRM:MHLW , CAPPRM:MOM) + FREQ:50HZ + MOVOL:400V) + CAPPRE:IEC , CAPPRE:ULCUL + CAPPRM:ASME + FREQ:60HZ + MOVOL:460V) + COOL:WATER **(05/02/2020 - ...)**	
	Electrical legend:	Mounting plate			
	1649 8003 85	1	MOUNTING PLATE	**(25/02/2019 - 04/02/2020)** ((((MOVOL:380V , MOVOL:460V) + CAPPRM:ASME , CAPPRM:MHLW + MOVOL:460V) + FREQ:60HZ , (CAPPRM:AS1210 , CAPPRM:CE , CAPPRM:MHLW , CAPPRM:MOM) + FREQ:50HZ + MOVOL:400V) + CAPPRE:IEC , CAPPRE:ULCUL + CAPPRM:ASME + FREQ:60HZ + MOVOL:460V) + COOL:WATER **(05/02/2020 - ...)**	
	Electrical legend:	Mounting plate			

Legend:

CAPPRE:IEC - Component approval electrical:IEC
CAPPRE:ULCUL - Component approval electrical:UL/cUL
CAPPRM:AS1210 - Component approval mechanical:AS1210
CAPPRM:ASME - Component approval mechanical:ASME
CAPPRM:CE - Component approval mechanical:CE
CAPPRM:MHLW - Component approval mechanical:MHLW
CAPPRM:MOM - Component approval mechanical:MOM
COOL:AIR - Cooling:Air cooled
COOL:WATER - Cooling:Water cooled
FREQ:50HZ - Frequency:50 Hz
FREQ:60HZ - Frequency:60 Hz
IDRY:N - Integrated dryer:No
MODEL:GA110VP_16 - Model:GA 110VSD+
MOVOL:380V - Supply voltage:380 V
MOVOL:400V - Supply voltage:400 V
MOVOL:460V - Supply voltage:460 V
MOVOL:500V - Supply voltage:500 V
MOVOL:575V - Supply voltage:575 V

21.25 - Cubicle components GA 110 VSD+ - (200V-380V-460V/60Hz - IEC, 230V-460V-575V/60Hz - UL-cUL, 200V-400V-500V/50Hz - IEC) - Pack (05/02/2020 - ...)

((((CAPPRM:AS1210 , CAPPRM:CE , CAPPRM:MHLW , CAPPRM:MOM) + MOVOL:400V , CAPPRM:CE + COOL:AIR + MOVOL:500V) + FREQ:50HZ , ((MOVOL:380V , MOVOL:460V) + CAPPRM:ASME , CAPPRM:MHLW + MOVOL:460V) + FREQ:60HZ) + CAPPRE:IEC , (COOL:AIR + MOVOL:575V , MOVOL:460V) + CAPPRE:ULCUL + CAPPRM:ASME + FREQ:60HZ) + IDRY:N + MODEL:GA110VP_16

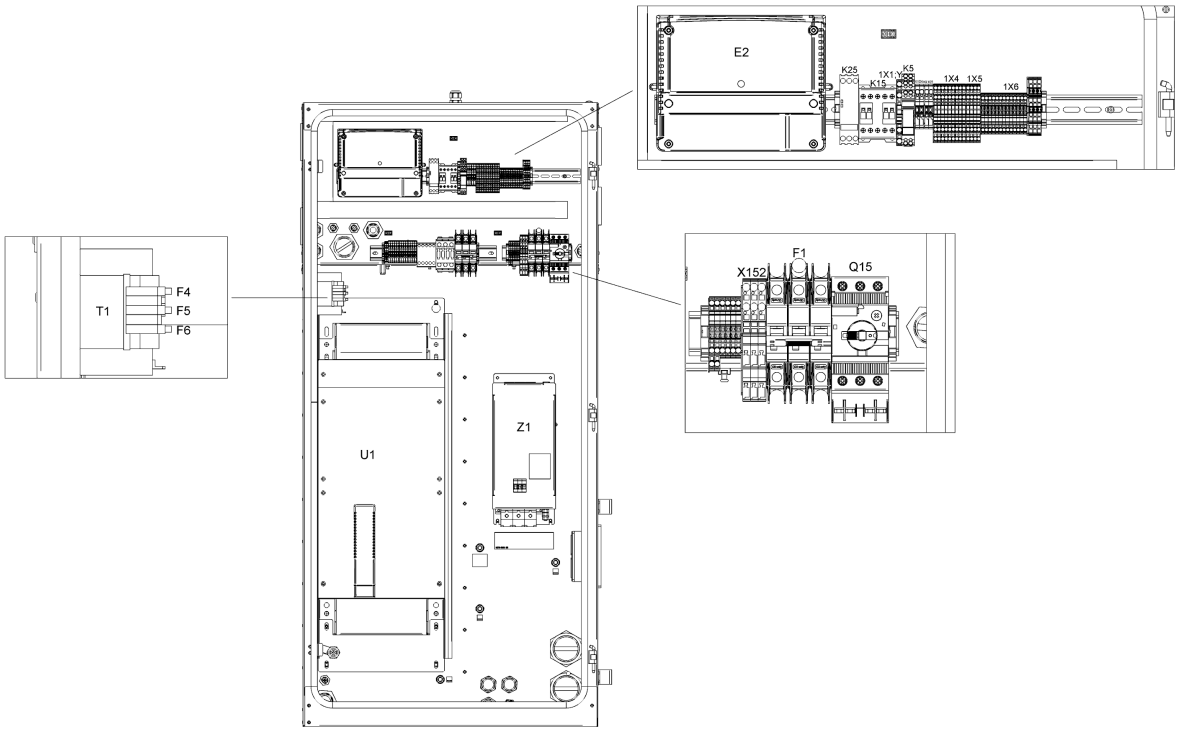

21.25 - Cubicle components GA 110 VSD+ - (200V-380V-460V/60Hz - IEC, 230V-460V-575V/60Hz - UL-cUL, 200V-400V-500V/50Hz - IEC) - Pack (05/02/2020 - ...)

((((CAPPRM:AS1210 , CAPPRM:CE , CAPPRM:MHLW , CAPPRM:MOM) + MOVOL:400V , CAPPRM:CE + COOL:AIR + MOVOL:500V) + FREQ:50HZ , ((MOVOL:380V , MOVOL:460V) + CAPPRM:ASME , CAPPRM:MHLW + MOVOL:460V) + FREQ:60HZ) + CAPPRE:IEC , (COOL:AIR + MOVOL:575V , MOVOL:460V) + CAPPRE:ULCUL + CAPPRM:ASME + FREQ:60HZ) + IDRY:N + MODEL:GA110VP_16

Ref	Part Number	Qty	Name	Validity	EL
	1649 8002 39	1	WIRE HARNESS	**(25/02/2019 - 04/02/2020)** ((((MOVOL:380V , MOVOL:460V) + CAPPRM:ASME , CAPPRM:MHLW + MOVOL:460V) + FREQ:60HZ , (CAPPRM:AS1210 , CAPPRM:CE , CAPPRM:MHLW , CAPPRM:MOM) + FREQ:50HZ + MOVOL:400V) + CAPPRE:IEC , CAPPRE:ULCUL + CAPPRM:ASME + FREQ:60HZ + MOVOL:460V) + COOL:WATER **(05/02/2020 - ...)**	WH
	1649 8002 40	1	WIRE HARNESS	**(25/02/2019 - 04/02/2020)** ((((MOVOL:380V , MOVOL:460V) + CAPPRM:ASME , CAPPRM:MHLW + MOVOL:460V) + FREQ:60HZ , (CAPPRM:AS1210 , CAPPRM:CE , CAPPRM:MHLW , CAPPRM:MOM) + FREQ:50HZ + MOVOL:400V) + CAPPRE:IEC , CAPPRE:ULCUL + CAPPRM:ASME + FREQ:60HZ + MOVOL:460V) + COOL:WATER **(05/02/2020 - ...)**	WH
•	1089 0574 87	1	TEMPERATURE SENSOR PT1000		
	1649 8002 73	1	WIRE HARNESS	**(25/02/2019 - 04/02/2020)** ((((MOVOL:380V , MOVOL:460V) + CAPPRM:ASME , CAPPRM:MHLW + MOVOL:460V) + FREQ:60HZ , (CAPPRM:AS1210 , CAPPRM:CE , CAPPRM:MHLW , CAPPRM:MOM) + FREQ:50HZ + MOVOL:400V) + CAPPRE:IEC , CAPPRE:ULCUL + CAPPRM:ASME + FREQ:60HZ + MOVOL:460V) + COOL:WATER **(05/02/2020 - ...)**	
	Electrical legend:	Pack Drain + Air filter switch			
	1649 8002 75	1	WIRE HARNESS	**(25/02/2019 - 04/02/2020)** ((((MOVOL:380V , MOVOL:460V) + CAPPRM:ASME , CAPPRM:MHLW + MOVOL:460V) + FREQ:60HZ , (CAPPRM:AS1210 , CAPPRM:CE , CAPPRM:MHLW , CAPPRM:MOM) + FREQ:50HZ + MOVOL:400V) + CAPPRE:IEC , CAPPRE:ULCUL + CAPPRM:ASME + FREQ:60HZ + MOVOL:460V) + COOL:WATER **(05/02/2020 - ...)**	
	Electrical legend:	Relative Humidity sensor			
•	1089 9320 10	1	TEMPERATURE SENSOR	**(05/02/2020 - ...)** **(22/07/2019 - 04/02/2020)** ((((MOVOL:380V , MOVOL:460V) + CAPPRM:ASME , CAPPRM:MHLW + MOVOL:460V) + FREQ:60HZ , (CAPPRM:AS1210 , CAPPRM:CE , CAPPRM:MHLW , CAPPRM:MOM) + FREQ:50HZ + MOVOL:400V) + CAPPRE:IEC , CAPPRE:ULCUL + CAPPRM:ASME + FREQ:60HZ + MOVOL:460V) + COOL:WATER	
•	~~1089 9320 09~~	1	RH SENSOR	**(25/02/2019 - 21/07/2019)** ((((MOVOL:380V , MOVOL:460V) + CAPPRM:ASME , CAPPRM:MHLW + MOVOL:460V) + FREQ:60HZ , (CAPPRM:AS1210 , CAPPRM:CE , CAPPRM:MHLW , CAPPRM:MOM) + FREQ:50HZ + MOVOL:400V) + CAPPRE:IEC , CAPPRE:ULCUL + CAPPRM:ASME + FREQ:60HZ + MOVOL:460V) + COOL:WATER	
	Substituted by:	1089 9320 10 - TEMP. SENSOR (quantity: 1)			
	1649 8001 43	3	MOTOR CABLE	**(25/02/2019 - 04/02/2020)** ((((MOVOL:380V , MOVOL:460V) + CAPPRM:ASME , CAPPRM:MHLW + MOVOL:460V) + FREQ:60HZ , (CAPPRM:AS1210 , CAPPRM:CE , CAPPRM:MHLW , CAPPRM:MOM) + FREQ:50HZ + MOVOL:400V) + CAPPRE:IEC , CAPPRE:ULCUL + CAPPRM:ASME + FREQ:60HZ + MOVOL:460V) + COOL:WATER **(05/02/2020 - ...)**	
	Electrical legend:	Motor conduit			

Legend:

CAPPRE:IEC - Component approval electrical:IEC
CAPPRE:ULCUL - Component approval electrical:UL/cUL
CAPPRM:AS1210 - Component approval mechanical:AS1210
CAPPRM:ASME - Component approval mechanical:ASME
CAPPRM:CE - Component approval mechanical:CE
CAPPRM:MHLW - Component approval mechanical:MHLW
CAPPRM:MOM - Component approval mechanical:MOM
COOL:AIR - Cooling:Air cooled
COOL:WATER - Cooling:Water cooled
FREQ:50HZ - Frequency:50 Hz
FREQ:60HZ - Frequency:60 Hz
IDRY:N - Integrated dryer:No
MODEL:GA110VP_16 - Model:GA 110VSD+
MOVOL:380V - Supply voltage:380 V
MOVOL:400V - Supply voltage:400 V
MOVOL:460V - Supply voltage:460 V
MOVOL:500V - Supply voltage:500 V
MOVOL:575V - Supply voltage:575 V

21.25 - Cubicle components GA 110 VSD+ - (200V-380V-460V/60Hz - IEC, 230V-460V-575V/60Hz - UL-cUL, 200V-400V-500V/50Hz - IEC) - Pack (05/02/2020 - ...)

((((CAPPRM:AS1210 , CAPPRM:CE , CAPPRM:MHLW , CAPPRM:MOM) + MOVOL:400V , CAPPRM:CE + COOL:AIR + MOVOL:500V) + FREQ:50HZ , ((MOVOL:380V , MOVOL:460V) + CAPPRM:ASME , CAPPRM:MHLW + MOVOL:460V) + FREQ:60HZ) + CAPPRE:IEC , (COOL:AIR + MOVOL:575V , MOVOL:460V) + CAPPRE:ULCUL + CAPPRM:ASME + FREQ:60HZ) + IDRY:N + MODEL:GA110VP_16

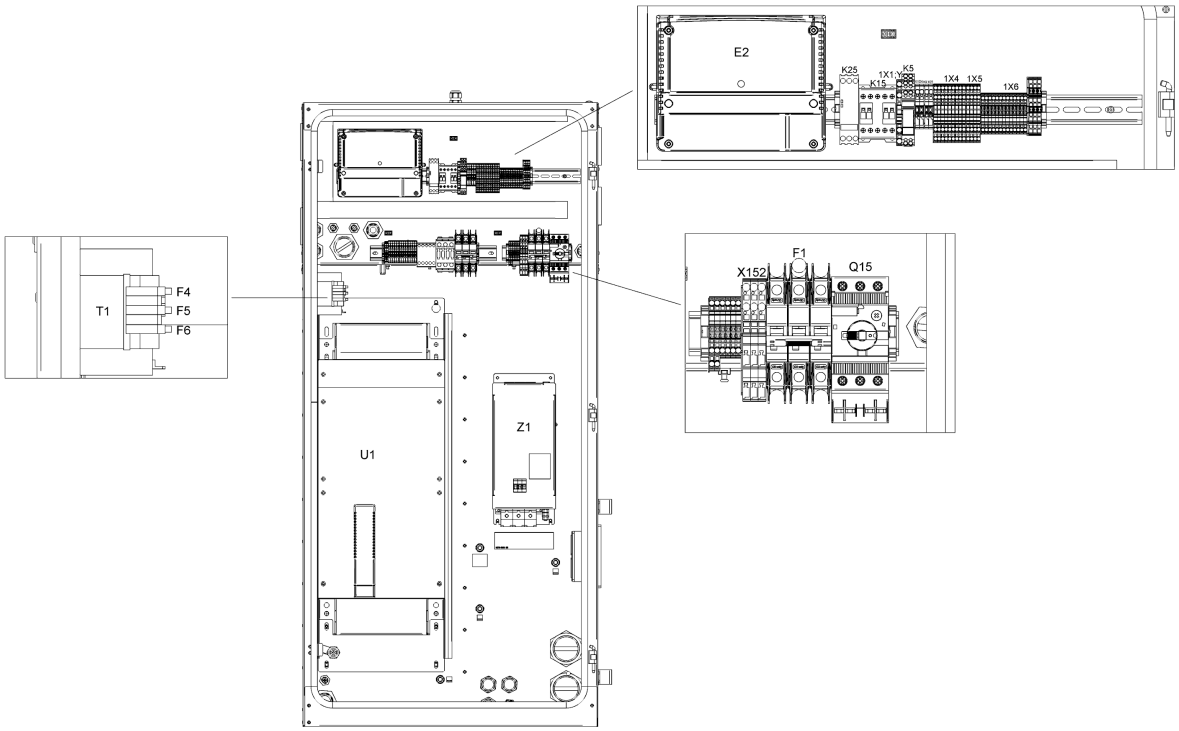

Ref	Part Number	Qty	Name	Validity	EL
	1649 8001 46	1	MOTOR CABLE	**(25/02/2019 - 04/02/2020)** ((((MOVOL:380V , MOVOL:460V) + CAPPRM:ASME , CAPPRM:MHLW + MOVOL:460V) + FREQ:60HZ , (CAPPRM:AS1210 , CAPPRM:CE , CAPPRM:MHLW , CAPPRM:MOM) + FREQ:50HZ + MOVOL:400V) + CAPPRE:IEC , CAPPRE:ULCUL + CAPPRM:ASME + FREQ:60HZ + MOVOL:460V) + COOL:WATER **(05/02/2020 - ...)**	
	Electrical legend:	Motor conduit			
	1625 3906 31	1	DATA LABEL	**(25/02/2019 - 04/02/2020)** ((((MOVOL:380V , MOVOL:460V) + CAPPRM:ASME , CAPPRM:MHLW + MOVOL:460V) + FREQ:60HZ , (CAPPRM:AS1210 , CAPPRM:CE , CAPPRM:MHLW , CAPPRM:MOM) + FREQ:50HZ + MOVOL:400V) + CAPPRE:IEC , CAPPRE:ULCUL + CAPPRM:ASME + FREQ:60HZ + MOVOL:460V) + COOL:WATER **(05/02/2020 - ...)**	Label
	1079 9901 68	1	WARNING LABEL	**(25/02/2019 - 04/02/2020)** ((((MOVOL:380V , MOVOL:460V) + CAPPRM:ASME , CAPPRM:MHLW + MOVOL:460V) + FREQ:60HZ , (CAPPRM:AS1210 , CAPPRM:CE , CAPPRM:MHLW , CAPPRM:MOM) + FREQ:50HZ + MOVOL:400V) + CAPPRE:IEC , CAPPRE:ULCUL + CAPPRM:ASME + FREQ:60HZ + MOVOL:460V) + COOL:WATER **(05/02/2020 - ...)**	Label
	1649 8005 00	0	LABEL	**(25/02/2019 - 04/02/2020)** ((((MOVOL:380V , MOVOL:460V) + CAPPRM:ASME , CAPPRM:MHLW + MOVOL:460V) + FREQ:60HZ , (CAPPRM:AS1210 , CAPPRM:CE , CAPPRM:MHLW , CAPPRM:MOM) + FREQ:50HZ + MOVOL:400V) + CAPPRE:IEC , CAPPRE:ULCUL + CAPPRM:ASME + FREQ:60HZ + MOVOL:460V) + COOL:WATER **(05/02/2020 - ...)**	Label
	1900 5350 18	1	INVERTER	**(25/02/2019 - 04/02/2020)** ((((MOVOL:380V , MOVOL:460V) + CAPPRM:ASME , CAPPRM:MHLW + MOVOL:460V) + FREQ:60HZ , (CAPPRM:AS1210 , CAPPRM:CE , CAPPRM:MHLW , CAPPRM:MOM) + FREQ:50HZ + MOVOL:400V) + CAPPRE:IEC , CAPPRE:ULCUL + CAPPRM:ASME + FREQ:60HZ + MOVOL:460V) + COOL:WATER **(05/02/2020 - ...)**	U1
	1631 2079 00	1	NANOPERMRING	**(25/02/2019 - 04/02/2020)** ((((MOVOL:380V , MOVOL:460V) + CAPPRM:ASME , CAPPRM:MHLW + MOVOL:460V) + FREQ:60HZ , (CAPPRM:AS1210 , CAPPRM:CE , CAPPRM:MHLW , CAPPRM:MOM) + FREQ:50HZ + MOVOL:400V) + CAPPRE:IEC , CAPPRE:ULCUL + CAPPRM:ASME + FREQ:60HZ + MOVOL:460V) + COOL:WATER **(05/02/2020 - ...)**	
	Electrical legend:	Nanoperm ring			
	0697 9811 17	2	PLUG	**(25/02/2019 - 04/02/2020)** ((((MOVOL:380V , MOVOL:460V) + CAPPRM:ASME , CAPPRM:MHLW + MOVOL:460V) + FREQ:60HZ , (CAPPRM:AS1210 , CAPPRM:CE , CAPPRM:MHLW , CAPPRM:MOM) + FREQ:50HZ + MOVOL:400V) + CAPPRE:IEC , CAPPRE:ULCUL + CAPPRM:ASME + FREQ:60HZ + MOVOL:460V) + COOL:WATER **(05/02/2020 - ...)**	
	Electrical legend:	Plug for transfo supply			

Legend:

CAPPRE:IEC - Component approval electrical:IEC
CAPPRE:ULCUL - Component approval electrical:UL/cUL
CAPPRM:AS1210 - Component approval mechanical:AS1210
CAPPRM:ASME - Component approval mechanical:ASME
CAPPRM:CE - Component approval mechanical:CE
CAPPRM:MHLW - Component approval mechanical:MHLW
CAPPRM:MOM - Component approval mechanical:MOM
COOL:AIR - Cooling:Air cooled
COOL:WATER - Cooling:Water cooled
FREQ:50HZ - Frequency:50 Hz
FREQ:60HZ - Frequency:60 Hz
IDRY:N - Integrated dryer:No
MODEL:GA110VP_16 - Model:GA 110VSD+
MOVOL:380V - Supply voltage:380 V
MOVOL:400V - Supply voltage:400 V
MOVOL:460V - Supply voltage:460 V
MOVOL:500V - Supply voltage:500 V
MOVOL:575V - Supply voltage:575 V

21.25 - Cubicle components GA 110 VSD+ - (200V-380V-460V/60Hz - IEC, 230V-460V-575V/60Hz - UL-cUL, 200V-400V-500V/50Hz - IEC) - Pack (05/02/2020 - ...)

((((CAPPRM:AS1210 , CAPPRM:CE , CAPPRM:MHLW , CAPPRM:MOM) + MOVOL:400V , CAPPRM:CE + COOL:AIR + MOVOL:500V) + FREQ:50HZ , ((MOVOL:380V , MOVOL:460V) + CAPPRM:ASME , CAPPRM:MHLW + MOVOL:460V) + FREQ:60HZ) + CAPPRE:IEC , (COOL:AIR + MOVOL:575V , MOVOL:460V) + CAPPRE:ULCUL + CAPPRM:ASME + FREQ:60HZ) + IDRY:N + MODEL:GA110VP_16

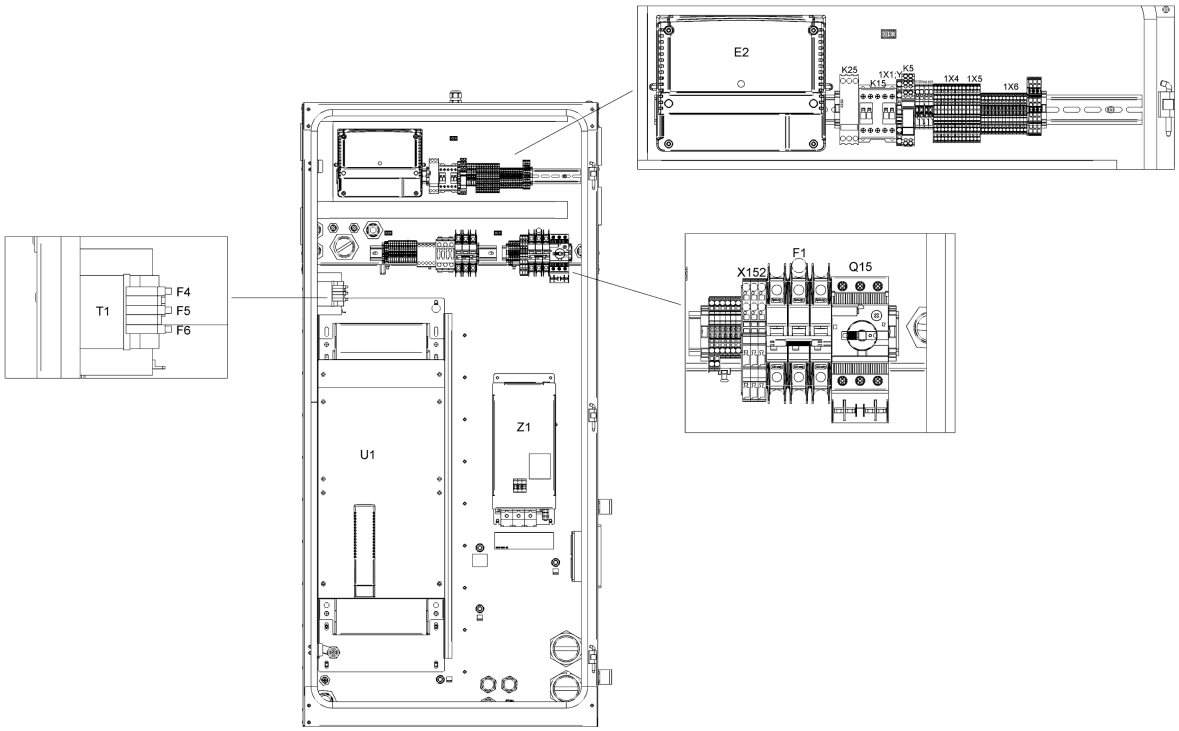

Ref	Part Number	Qty	Name	Validity	EL
	0989 3700 48	2	NUT	**(25/02/2019 - 04/02/2020)** ((((MOVOL:380V , MOVOL:460V) + CAPPRM:ASME , CAPPRM:MHLW + MOVOL:460V) + FREQ:60HZ , (CAPPRM:AS1210 , CAPPRM:CE , CAPPRM:MHLW , CAPPRM:MOM) + FREQ:50HZ + MOVOL:400V) + CAPPRE:IEC , CAPPRE:ULCUL + CAPPRM:ASME + FREQ:60HZ + MOVOL:460V) + COOL:WATER **(05/02/2020 - ...)**	
	Electrical legend:	Nut for transfo supply			
	0698 5140 72	1	CABLE GLAND	**(25/02/2019 - 04/02/2020)** ((((MOVOL:380V , MOVOL:460V) + CAPPRM:ASME , CAPPRM:MHLW + MOVOL:460V) + FREQ:60HZ , (CAPPRM:AS1210 , CAPPRM:CE , CAPPRM:MHLW , CAPPRM:MOM) + FREQ:50HZ + MOVOL:400V) + CAPPRE:IEC , CAPPRE:ULCUL + CAPPRM:ASME + FREQ:60HZ + MOVOL:460V) + COOL:WATER **(05/02/2020 - ...)**	Fan
	0698 5140 71	1	CABLE GLAND	**(25/02/2019 - 04/02/2020)** ((((MOVOL:380V , MOVOL:460V) + CAPPRM:ASME , CAPPRM:MHLW + MOVOL:460V) + FREQ:60HZ , (CAPPRM:AS1210 , CAPPRM:CE , CAPPRM:MHLW , CAPPRM:MOM) + FREQ:50HZ + MOVOL:400V) + CAPPRE:IEC , CAPPRE:ULCUL + CAPPRM:ASME + FREQ:60HZ + MOVOL:460V) + COOL:WATER **(05/02/2020 - ...)**	
	Electrical legend:	Ambient sensor			
	0697 9809 20	1	LOCKNUT	**(25/02/2019 - 04/02/2020)** ((((MOVOL:380V , MOVOL:460V) + CAPPRM:ASME , CAPPRM:MHLW + MOVOL:460V) + FREQ:60HZ , (CAPPRM:AS1210 , CAPPRM:CE , CAPPRM:MHLW , CAPPRM:MOM) + FREQ:50HZ + MOVOL:400V) + CAPPRE:IEC , CAPPRE:ULCUL + CAPPRM:ASME + FREQ:60HZ + MOVOL:460V) + COOL:WATER **(05/02/2020 - ...)**	
	Electrical legend:	Ambient sensor			
	1089 9556 44	1	FAN WITH FILTER	**(25/02/2019 - 04/02/2020)** ((((MOVOL:380V , MOVOL:460V) + CAPPRM:ASME , CAPPRM:MHLW + MOVOL:460V) + FREQ:60HZ , (CAPPRM:AS1210 , CAPPRM:CE , CAPPRM:MHLW , CAPPRM:MOM) + FREQ:50HZ + MOVOL:400V) + CAPPRE:IEC , CAPPRE:ULCUL + CAPPRM:ASME + FREQ:60HZ + MOVOL:460V) + COOL:WATER **(05/02/2020 - ...)**	Cubicle fan
	1089 9556 72	4	AIR INLET WITHOUT FILTER	**(25/02/2019 - 04/02/2020)** ((((MOVOL:380V , MOVOL:460V) + CAPPRM:ASME , CAPPRM:MHLW + MOVOL:460V) + FREQ:60HZ , (CAPPRM:AS1210 , CAPPRM:CE , CAPPRM:MHLW , CAPPRM:MOM) + FREQ:50HZ + MOVOL:400V) + CAPPRE:IEC , CAPPRE:ULCUL + CAPPRM:ASME + FREQ:60HZ + MOVOL:460V) + COOL:WATER **(05/02/2020 - ...)**	Filter grid
	1088 0032 09	1	CONNECTOR	**(25/02/2019 - 04/02/2020)** ((((MOVOL:380V , MOVOL:460V) + CAPPRM:ASME , CAPPRM:MHLW + MOVOL:460V) + FREQ:60HZ , (CAPPRM:AS1210 , CAPPRM:CE , CAPPRM:MHLW , CAPPRM:MOM) + FREQ:50HZ + MOVOL:400V) + CAPPRE:IEC , CAPPRE:ULCUL + CAPPRM:ASME + FREQ:60HZ + MOVOL:460V) + COOL:WATER **(05/02/2020 - ...)**	X3

Legend:

CAPPRE:IEC - Component approval electrical:IEC
CAPPRE:ULCUL - Component approval electrical:UL/cUL
CAPPRM:AS1210 - Component approval mechanical:AS1210
CAPPRM:ASME - Component approval mechanical:ASME
CAPPRM:CE - Component approval mechanical:CE
CAPPRM:MHLW - Component approval mechanical:MHLW
CAPPRM:MOM - Component approval mechanical:MOM
COOL:AIR - Cooling:Air cooled
COOL:WATER - Cooling:Water cooled
FREQ:50HZ - Frequency:50 Hz
FREQ:60HZ - Frequency:60 Hz
IDRY:N - Integrated dryer:No
MODEL:GA110VP_16 - Model:GA 110VSD+
MOVOL:380V - Supply voltage:380 V
MOVOL:400V - Supply voltage:400 V
MOVOL:460V - Supply voltage:460 V
MOVOL:500V - Supply voltage:500 V
MOVOL:575V - Supply voltage:575 V

21.25 - Cubicle components GA 110 VSD+ - (200V-380V-460V/60Hz - IEC, 230V-460V-575V/60Hz - UL-cUL, 200V-400V-500V/50Hz - IEC) - Pack (05/02/2020 - ...)

((((CAPPRM:AS1210 , CAPPRM:CE , CAPPRM:MHLW , CAPPRM:MOM) + MOVOL:400V , CAPPRM:CE + COOL:AIR + MOVOL:500V) + FREQ:50HZ , ((MOVOL:380V , MOVOL:460V) + CAPPRM:ASME , CAPPRM:MHLW + MOVOL:460V) + FREQ:60HZ) + CAPPRE:IEC , (COOL:AIR + MOVOL:575V , MOVOL:460V) + CAPPRE:ULCUL + CAPPRM:ASME + FREQ:60HZ) + IDRY:N + MODEL:GA110VP_16

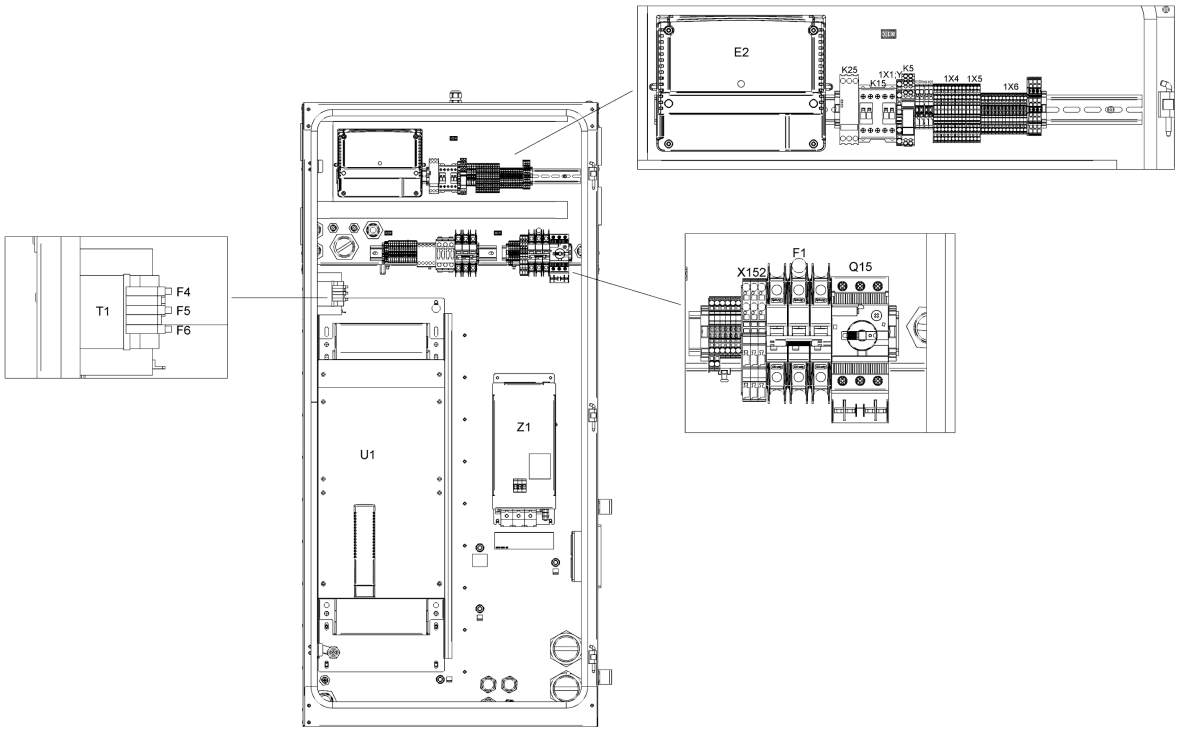

21.25 - Cubicle components GA 110 VSD+ - (200V-380V-460V/60Hz - IEC, 230V-460V-575V/60Hz - UL-cUL, 200V-400V-500V/50Hz - IEC) - Pack (05/02/2020 - ...)

((((CAPPRM:AS1210 , CAPPRM:CE , CAPPRM:MHLW , CAPPRM:MOM) + MOVOL:400V , CAPPRM:CE + COOL:AIR + MOVOL:500V) + FREQ:50HZ , ((MOVOL:380V , MOVOL:460V) + CAPPRM:ASME , CAPPRM:MHLW + MOVOL:460V) + FREQ:60HZ) + CAPPRE:IEC , (COOL:AIR + MOVOL:575V , MOVOL:460V) + CAPPRE:ULCUL + CAPPRM:ASME + FREQ:60HZ) + IDRY:N + MODEL:GA110VP_16

Ref	Part Number	Qty	Name	Validity	EL
	1089 9572 04	1	LINE FILTER	**(25/02/2019 - 04/02/2020)** ((((MOVOL:380V , MOVOL:460V) + CAPPRM:ASME , CAPPRM:MHLW + MOVOL:460V) + FREQ:60HZ , (CAPPRM:AS1210 , CAPPRM:CE , CAPPRM:MHLW , CAPPRM:MOM) + FREQ:50HZ + MOVOL:400V) + CAPPRE:IEC , CAPPRE:ULCUL + CAPPRM:ASME + FREQ:60HZ + MOVOL:460V) + COOL:WATER **(05/02/2020 - ...)**	Z1 for 110kw
	Electrical legend:	Z1 for 110kw			
	1089 9562 04	1	STRAP	**(25/02/2019 - 04/02/2020)** ((((MOVOL:380V , MOVOL:460V) + CAPPRM:ASME , CAPPRM:MHLW + MOVOL:460V) + FREQ:60HZ , (CAPPRM:AS1210 , CAPPRM:CE , CAPPRM:MHLW , CAPPRM:MOM) + FREQ:50HZ + MOVOL:400V) + CAPPRE:IEC , CAPPRE:ULCUL + CAPPRM:ASME + FREQ:60HZ + MOVOL:460V) + COOL:WATER **(05/02/2020 - ...)**	HF-screen
	1089 9514 56	1	TRANSFORMER	**(25/02/2019 - 04/02/2020)** ((((MOVOL:380V , MOVOL:460V) + CAPPRM:ASME , CAPPRM:MHLW + MOVOL:460V) + FREQ:60HZ , (CAPPRM:AS1210 , CAPPRM:CE , CAPPRM:MHLW , CAPPRM:MOM) + FREQ:50HZ + MOVOL:400V) + CAPPRE:IEC , CAPPRE:ULCUL + CAPPRM:ASME + FREQ:60HZ + MOVOL:460V) + COOL:WATER **(05/02/2020 - ...)**	T1
	1089 9522 26	1	CIRCUIT BREAKER	**(25/02/2019 - 04/02/2020)** ((((MOVOL:380V , MOVOL:460V) + CAPPRM:ASME , CAPPRM:MHLW + MOVOL:460V) + FREQ:60HZ , (CAPPRM:AS1210 , CAPPRM:CE , CAPPRM:MHLW , CAPPRM:MOM) + FREQ:50HZ + MOVOL:400V) + CAPPRE:IEC , CAPPRE:ULCUL + CAPPRM:ASME + FREQ:60HZ + MOVOL:460V) + COOL:WATER **(05/02/2020 - ...)**	F1
	1089 9513 41	1	PUSH BUTTON	**(25/02/2019 - 04/02/2020)** ((((MOVOL:380V , MOVOL:460V) + CAPPRM:ASME , CAPPRM:MHLW + MOVOL:460V) + FREQ:60HZ , (CAPPRM:AS1210 , CAPPRM:CE , CAPPRM:MHLW , CAPPRM:MOM) + FREQ:50HZ + MOVOL:400V) + CAPPRE:IEC , CAPPRE:ULCUL + CAPPRM:ASME + FREQ:60HZ + MOVOL:460V) + COOL:WATER **(05/02/2020 - ...)**	S3
	1089 9513 28	1	HOLDER	**(25/02/2019 - 04/02/2020)** ((((MOVOL:380V , MOVOL:460V) + CAPPRM:ASME , CAPPRM:MHLW + MOVOL:460V) + FREQ:60HZ , (CAPPRM:AS1210 , CAPPRM:CE , CAPPRM:MHLW , CAPPRM:MOM) + FREQ:50HZ + MOVOL:400V) + CAPPRE:IEC , CAPPRE:ULCUL + CAPPRM:ASME + FREQ:60HZ + MOVOL:460V) + COOL:WATER **(05/02/2020 - ...)**	S3
	~~1089 9513 30~~	4	CONTACTOR	**(25/02/2019 - 04/02/2020)** ((((MOVOL:380V , MOVOL:460V) + CAPPRM:ASME , CAPPRM:MHLW + MOVOL:460V) + FREQ:60HZ , (CAPPRM:AS1210 , CAPPRM:CE , CAPPRM:MHLW , CAPPRM:MOM) + FREQ:50HZ + MOVOL:400V) + CAPPRE:IEC , CAPPRE:ULCUL + CAPPRM:ASME + FREQ:60HZ + MOVOL:460V) + COOL:WATER **(05/02/2020 - ...)**	S3
	Substituted by:	1089 9513 04 - CONTACT BLOCK (quantity: 1)			

Legend:

CAPPRE:IEC - Component approval electrical:IEC
CAPPRE:ULCUL - Component approval electrical:UL/cUL
CAPPRM:AS1210 - Component approval mechanical:AS1210
CAPPRM:ASME - Component approval mechanical:ASME
CAPPRM:CE - Component approval mechanical:CE
CAPPRM:MHLW - Component approval mechanical:MHLW
CAPPRM:MOM - Component approval mechanical:MOM
COOL:AIR - Cooling:Air cooled
COOL:WATER - Cooling:Water cooled
FREQ:50HZ - Frequency:50 Hz
FREQ:60HZ - Frequency:60 Hz
IDRY:N - Integrated dryer:No
MODEL:GA110VP_16 - Model:GA 110VSD+
MOVOL:380V - Supply voltage:380 V
MOVOL:400V - Supply voltage:400 V
MOVOL:460V - Supply voltage:460 V
MOVOL:500V - Supply voltage:500 V
MOVOL:575V - Supply voltage:575 V

21.25 - Cubicle components GA 110 VSD+ - (200V-380V-460V/60Hz - IEC, 230V-460V-575V/60Hz - UL-cUL, 200V-400V-500V/50Hz - IEC) - Pack (05/02/2020 - ...)

((((CAPPRM:AS1210 , CAPPRM:CE , CAPPRM:MHLW , CAPPRM:MOM) + MOVOL:400V , CAPPRM:CE + COOL:AIR + MOVOL:500V) + FREQ:50HZ , ((MOVOL:380V , MOVOL:460V) + CAPPRM:ASME , CAPPRM:MHLW + MOVOL:460V) + FREQ:60HZ) + CAPPRE:IEC , (COOL:AIR + MOVOL:575V , MOVOL:460V) + CAPPRE:ULCUL + CAPPRM:ASME + FREQ:60HZ) + IDRY:N + MODEL:GA110VP_16

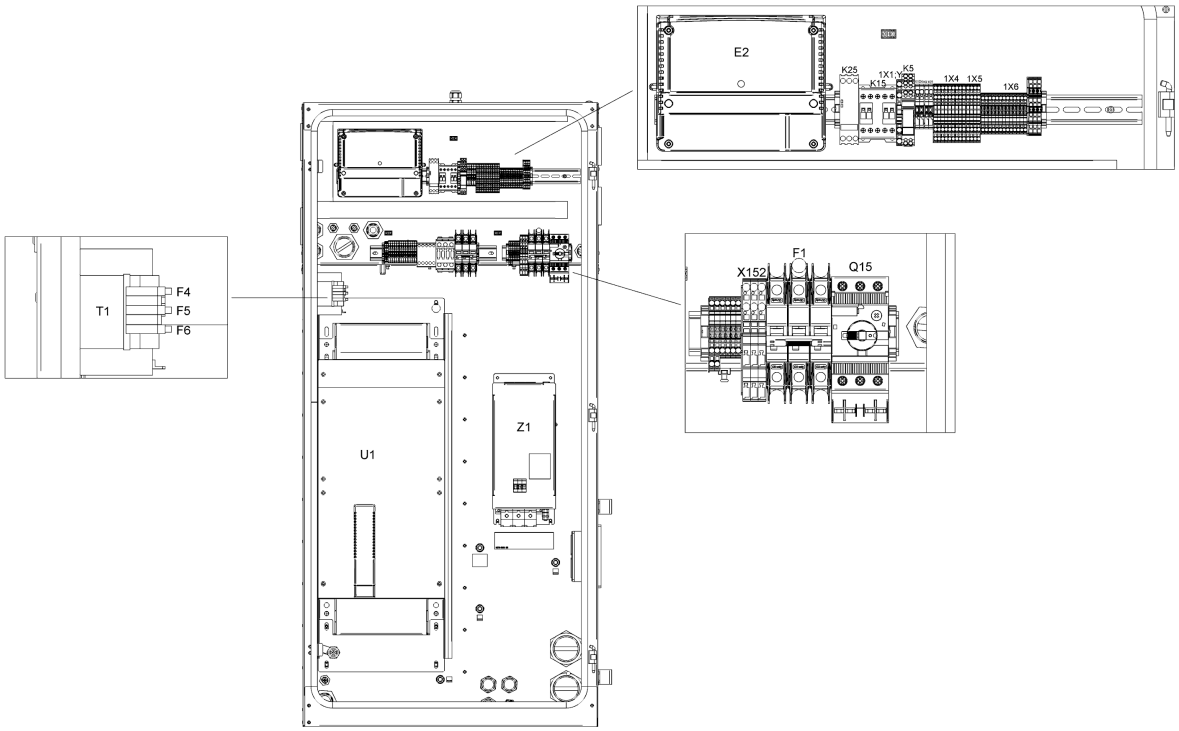

Ref	Part Number	Qty	Name	Validity	EL
	1088 0039 07	3	TERMINAL	**(25/02/2019 - 04/02/2020)** ((((MOVOL:380V , MOVOL:460V) + CAPPRM:ASME , CAPPRM:MHLW + MOVOL:460V) + FREQ:60HZ , (CAPPRM:AS1210 , CAPPRM:CE , CAPPRM:MHLW , CAPPRM:MOM) + FREQ:50HZ + MOVOL:400V) + CAPPRE:IEC , CAPPRE:ULCUL + CAPPRM:ASME + FREQ:60HZ + MOVOL:460V) + COOL:WATER **(05/02/2020 - ...)**	X152
	1088 0039 05	1	PLATE	**(25/02/2019 - 04/02/2020)** ((((MOVOL:380V , MOVOL:460V) + CAPPRM:ASME , CAPPRM:MHLW + MOVOL:460V) + FREQ:60HZ , (CAPPRM:AS1210 , CAPPRM:CE , CAPPRM:MHLW , CAPPRM:MOM) + FREQ:50HZ + MOVOL:400V) + CAPPRE:IEC , CAPPRE:ULCUL + CAPPRM:ASME + FREQ:60HZ + MOVOL:460V) + COOL:WATER **(05/02/2020 - ...)**	X152
	1088 0039 26	1	CONNECTOR	**(25/02/2019 - 04/02/2020)** ((((MOVOL:380V , MOVOL:460V) + CAPPRM:ASME , CAPPRM:MHLW + MOVOL:460V) + FREQ:60HZ , (CAPPRM:AS1210 , CAPPRM:CE , CAPPRM:MHLW , CAPPRM:MOM) + FREQ:50HZ + MOVOL:400V) + CAPPRE:IEC , CAPPRE:ULCUL + CAPPRM:ASME + FREQ:60HZ + MOVOL:460V) + COOL:WATER **(05/02/2020 - ...)**	
	Electrical legend:	X152 (remove coding pin 1,3)			
	1088 0037 99	4	PIN	**(25/02/2019 - 04/02/2020)** ((((MOVOL:380V , MOVOL:460V) + CAPPRM:ASME , CAPPRM:MHLW + MOVOL:460V) + FREQ:60HZ , (CAPPRM:AS1210 , CAPPRM:CE , CAPPRM:MHLW , CAPPRM:MOM) + FREQ:50HZ + MOVOL:400V) + CAPPRE:IEC , CAPPRE:ULCUL + CAPPRM:ASME + FREQ:60HZ + MOVOL:460V) + COOL:WATER **(05/02/2020 - ...)**	X152:1; 3
	~~1088 0031 81~~	7	END STOP BRACKET 6MM	**(25/02/2019 - 04/02/2020)** ((((MOVOL:380V , MOVOL:460V) + CAPPRM:ASME , CAPPRM:MHLW + MOVOL:460V) + FREQ:60HZ , (CAPPRM:AS1210 , CAPPRM:CE , CAPPRM:MHLW , CAPPRM:MOM) + FREQ:50HZ + MOVOL:400V) + CAPPRE:IEC , CAPPRE:ULCUL + CAPPRM:ASME + FREQ:60HZ + MOVOL:460V) + COOL:WATER **(05/02/2020 - ...)**	
	Electrical legend:	Connector/terminal rail			
	Substituted by:	1089 0577 82 - END RETAINER (quantity: 1)			
	1088 0039 38	2	TERMINAL	**(25/02/2019 - 04/02/2020)** ((((MOVOL:380V , MOVOL:460V) + CAPPRM:ASME , CAPPRM:MHLW + MOVOL:460V) + FREQ:60HZ , (CAPPRM:AS1210 , CAPPRM:CE , CAPPRM:MHLW , CAPPRM:MOM) + FREQ:50HZ + MOVOL:400V) + CAPPRE:IEC , CAPPRE:ULCUL + CAPPRM:ASME + FREQ:60HZ + MOVOL:460V) + COOL:WATER **(05/02/2020 - ...)**	1X11:2,5
	1088 0039 40	1	PLATE	**(25/02/2019 - 04/02/2020)** ((((MOVOL:380V , MOVOL:460V) + CAPPRM:ASME , CAPPRM:MHLW + MOVOL:460V) + FREQ:60HZ , (CAPPRM:AS1210 , CAPPRM:CE , CAPPRM:MHLW , CAPPRM:MOM) + FREQ:50HZ + MOVOL:400V) + CAPPRE:IEC , CAPPRE:ULCUL + CAPPRM:ASME + FREQ:60HZ + MOVOL:460V) + COOL:WATER **(05/02/2020 - ...)**	1X11

Legend:

CAPPRE:IEC - Component approval electrical:IEC
CAPPRE:ULCUL - Component approval electrical:UL/cUL
CAPPRM:AS1210 - Component approval mechanical:AS1210
CAPPRM:ASME - Component approval mechanical:ASME
CAPPRM:CE - Component approval mechanical:CE
CAPPRM:MHLW - Component approval mechanical:MHLW
CAPPRM:MOM - Component approval mechanical:MOM
COOL:AIR - Cooling:Air cooled
COOL:WATER - Cooling:Water cooled
FREQ:50HZ - Frequency:50 Hz
FREQ:60HZ - Frequency:60 Hz
IDRY:N - Integrated dryer:No
MODEL:GA110VP_16 - Model:GA 110VSD+
MOVOL:380V - Supply voltage:380 V
MOVOL:400V - Supply voltage:400 V
MOVOL:460V - Supply voltage:460 V
MOVOL:500V - Supply voltage:500 V
MOVOL:575V - Supply voltage:575 V

21.25 - Cubicle components GA 110 VSD+ - (200V-380V-460V/60Hz - IEC, 230V-460V-575V/60Hz - UL-cUL, 200V-400V-500V/50Hz - IEC) - Pack (05/02/2020 - ...)

((((CAPPRM:AS1210 , CAPPRM:CE , CAPPRM:MHLW , CAPPRM:MOM) + MOVOL:400V , CAPPRM:CE + COOL:AIR + MOVOL:500V) + FREQ:50HZ , ((MOVOL:380V , MOVOL:460V) + CAPPRM:ASME , CAPPRM:MHLW + MOVOL:460V) + FREQ:60HZ) + CAPPRE:IEC , (COOL:AIR + MOVOL:575V , MOVOL:460V) + CAPPRE:ULCUL + CAPPRM:ASME + FREQ:60HZ) + IDRY:N + MODEL:GA110VP_16

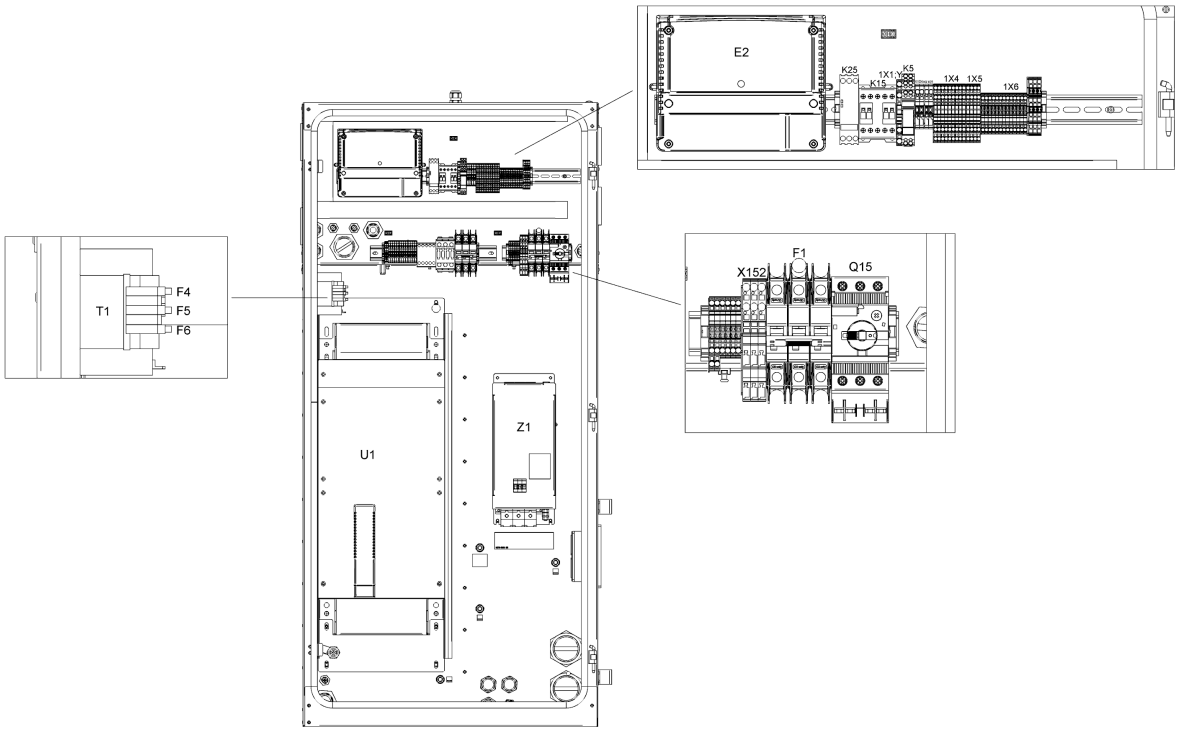

Ref	Part Number	Qty	Name	Validity	EL
	1088 0039 34	4	TERMINAL	**(25/02/2019 - 04/02/2020)** ((((MOVOL:380V , MOVOL:460V) + CAPPRM:ASME , CAPPRM:MHLW + MOVOL:460V) + FREQ:60HZ , (CAPPRM:AS1210 , CAPPRM:CE , CAPPRM:MHLW , CAPPRM:MOM) + FREQ:50HZ + MOVOL:400V) + CAPPRE:IEC , CAPPRE:ULCUL + CAPPRM:ASME + FREQ:60HZ + MOVOL:460V) + COOL:WATER **(05/02/2020 - ...)**	
	Electrical legend:	1X11:30,301,34			
	1088 0039 35	1	PLATE	**(25/02/2019 - 04/02/2020)** ((((MOVOL:380V , MOVOL:460V) + CAPPRM:ASME , CAPPRM:MHLW + MOVOL:460V) + FREQ:60HZ , (CAPPRM:AS1210 , CAPPRM:CE , CAPPRM:MHLW , CAPPRM:MOM) + FREQ:50HZ + MOVOL:400V) + CAPPRE:IEC , CAPPRE:ULCUL + CAPPRM:ASME + FREQ:60HZ + MOVOL:460V) + COOL:WATER **(05/02/2020 - ...)**	1X11
	1088 0039 04	2	TERMINAL	**(25/02/2019 - 04/02/2020)** ((((MOVOL:380V , MOVOL:460V) + CAPPRM:ASME , CAPPRM:MHLW + MOVOL:460V) + FREQ:60HZ , (CAPPRM:AS1210 , CAPPRM:CE , CAPPRM:MHLW , CAPPRM:MOM) + FREQ:50HZ + MOVOL:400V) + CAPPRE:IEC , CAPPRE:ULCUL + CAPPRM:ASME + FREQ:60HZ + MOVOL:460V) + COOL:WATER **(05/02/2020 - ...)**	X104a
	1088 0037 99	2	PIN	**(25/02/2019 - 04/02/2020)** ((((MOVOL:380V , MOVOL:460V) + CAPPRM:ASME , CAPPRM:MHLW + MOVOL:460V) + FREQ:60HZ , (CAPPRM:AS1210 , CAPPRM:CE , CAPPRM:MHLW , CAPPRM:MOM) + FREQ:50HZ + MOVOL:400V) + CAPPRE:IEC , CAPPRE:ULCUL + CAPPRM:ASME + FREQ:60HZ + MOVOL:460V) + COOL:WATER **(05/02/2020 - ...)**	X104a/X105
	1088 0039 02	1	PLATE	**(25/02/2019 - 04/02/2020)** ((((MOVOL:380V , MOVOL:460V) + CAPPRM:ASME , CAPPRM:MHLW + MOVOL:460V) + FREQ:60HZ , (CAPPRM:AS1210 , CAPPRM:CE , CAPPRM:MHLW , CAPPRM:MOM) + FREQ:50HZ + MOVOL:400V) + CAPPRE:IEC , CAPPRE:ULCUL + CAPPRM:ASME + FREQ:60HZ + MOVOL:460V) + COOL:WATER **(05/02/2020 - ...)**	X104a
	1088 0039 07	2	TERMINAL	**(25/02/2019 - 04/02/2020)** ((((MOVOL:380V , MOVOL:460V) + CAPPRM:ASME , CAPPRM:MHLW + MOVOL:460V) + FREQ:60HZ , (CAPPRM:AS1210 , CAPPRM:CE , CAPPRM:MHLW , CAPPRM:MOM) + FREQ:50HZ + MOVOL:400V) + CAPPRE:IEC , CAPPRE:ULCUL + CAPPRM:ASME + FREQ:60HZ + MOVOL:460V) + COOL:WATER **(05/02/2020 - ...)**	X105
	1088 0039 05	1	PLATE	**(25/02/2019 - 04/02/2020)** ((((MOVOL:380V , MOVOL:460V) + CAPPRM:ASME , CAPPRM:MHLW + MOVOL:460V) + FREQ:60HZ , (CAPPRM:AS1210 , CAPPRM:CE , CAPPRM:MHLW , CAPPRM:MOM) + FREQ:50HZ + MOVOL:400V) + CAPPRE:IEC , CAPPRE:ULCUL + CAPPRM:ASME + FREQ:60HZ + MOVOL:460V) + COOL:WATER **(05/02/2020 - ...)**	X105

Legend:

CAPPRE:IEC - Component approval electrical:IEC
CAPPRE:ULCUL - Component approval electrical:UL/cUL
CAPPRM:AS1210 - Component approval mechanical:AS1210
CAPPRM:ASME - Component approval mechanical:ASME
CAPPRM:CE - Component approval mechanical:CE
CAPPRM:MHLW - Component approval mechanical:MHLW
CAPPRM:MOM - Component approval mechanical:MOM
COOL:AIR - Cooling:Air cooled
COOL:WATER - Cooling:Water cooled
FREQ:50HZ - Frequency:50 Hz
FREQ:60HZ - Frequency:60 Hz
IDRY:N - Integrated dryer:No
MODEL:GA110VP_16 - Model:GA 110VSD+
MOVOL:380V - Supply voltage:380 V
MOVOL:400V - Supply voltage:400 V
MOVOL:460V - Supply voltage:460 V
MOVOL:500V - Supply voltage:500 V
MOVOL:575V - Supply voltage:575 V

21.25 - Cubicle components GA 110 VSD+ - (200V-380V-460V/60Hz - IEC, 230V-460V-575V/60Hz - UL-cUL, 200V-400V-500V/50Hz - IEC) - Pack (05/02/2020 - ...)

((((CAPPRM:AS1210 , CAPPRM:CE , CAPPRM:MHLW , CAPPRM:MOM) + MOVOL:400V , CAPPRM:CE + COOL:AIR + MOVOL:500V) + FREQ:50HZ , ((MOVOL:380V , MOVOL:460V) + CAPPRM:ASME , CAPPRM:MHLW + MOVOL:460V) + FREQ:60HZ) + CAPPRE:IEC , (COOL:AIR + MOVOL:575V , MOVOL:460V) + CAPPRE:ULCUL + CAPPRM:ASME + FREQ:60HZ) + IDRY:N + MODEL:GA110VP_16

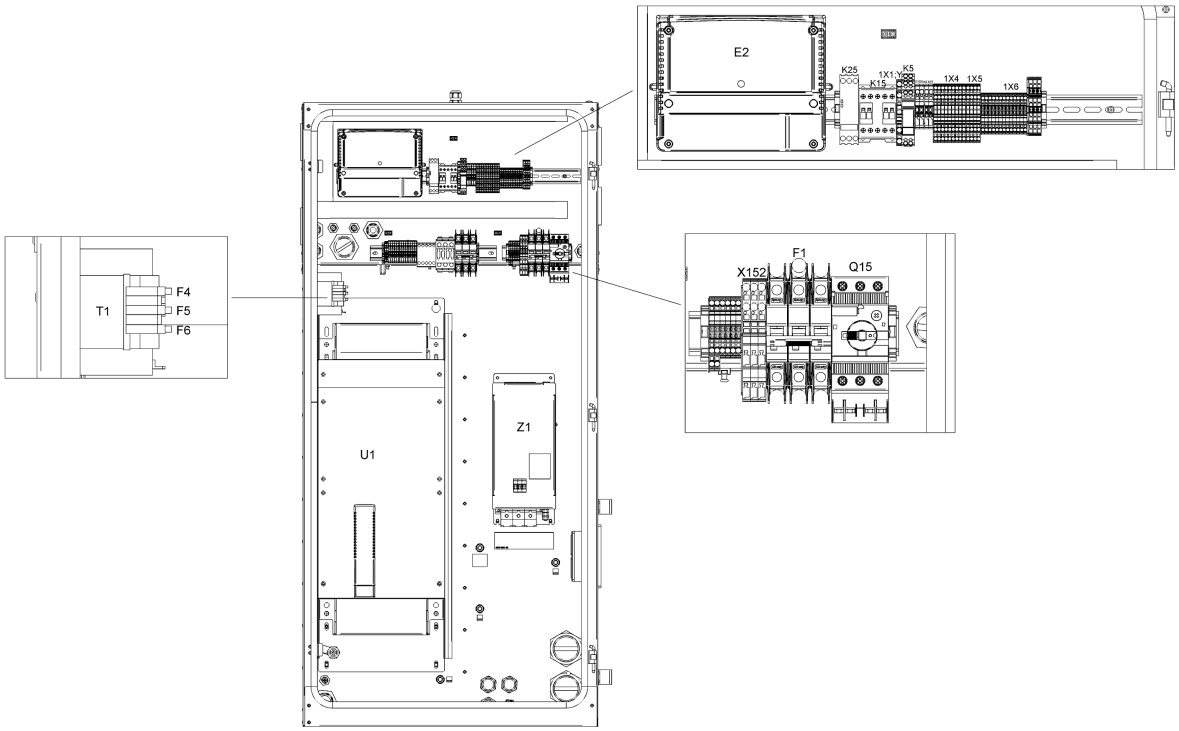

Ref	Part Number	Qty	Name	Validity	EL
	1088 0039 34	13	TERMINAL	**(25/02/2019 - 04/02/2020)** ((((MOVOL:380V , MOVOL:460V) + CAPPRM:ASME , CAPPRM:MHLW + MOVOL:460V) + FREQ:60HZ , (CAPPRM:AS1210 , CAPPRM:CE , CAPPRM:MHLW , CAPPRM:MOM) + FREQ:50HZ + MOVOL:400V) + CAPPRE:IEC , CAPPRE:ULCUL + CAPPRM:ASME + FREQ:60HZ + MOVOL:460V) + COOL:WATER **(05/02/2020 - ...)**	1X6
	1088 0037 69	3	CONNECTOR	**(25/02/2019 - 04/02/2020)** ((((MOVOL:380V , MOVOL:460V) + CAPPRM:ASME , CAPPRM:MHLW + MOVOL:460V) + FREQ:60HZ , (CAPPRM:AS1210 , CAPPRM:CE , CAPPRM:MHLW , CAPPRM:MOM) + FREQ:50HZ + MOVOL:400V) + CAPPRE:IEC , CAPPRE:ULCUL + CAPPRM:ASME + FREQ:60HZ + MOVOL:460V) + COOL:WATER **(05/02/2020 - ...)**	1X7
	1088 0039 35	1	PLATE	**(25/02/2019 - 04/02/2020)** ((((MOVOL:380V , MOVOL:460V) + CAPPRM:ASME , CAPPRM:MHLW + MOVOL:460V) + FREQ:60HZ , (CAPPRM:AS1210 , CAPPRM:CE , CAPPRM:MHLW , CAPPRM:MOM) + FREQ:50HZ + MOVOL:400V) + CAPPRE:IEC , CAPPRE:ULCUL + CAPPRM:ASME + FREQ:60HZ + MOVOL:460V) + COOL:WATER **(05/02/2020 - ...)**	1X6
	1088 0040 37	1	END PLATE	**(25/02/2019 - 04/02/2020)** ((((MOVOL:380V , MOVOL:460V) + CAPPRM:ASME , CAPPRM:MHLW + MOVOL:460V) + FREQ:60HZ , (CAPPRM:AS1210 , CAPPRM:CE , CAPPRM:MHLW , CAPPRM:MOM) + FREQ:50HZ + MOVOL:400V) + CAPPRE:IEC , CAPPRE:ULCUL + CAPPRM:ASME + FREQ:60HZ + MOVOL:460V) + COOL:WATER **(05/02/2020 - ...)**	1X7
	1088 0039 36	9	TERMINAL	**(25/02/2019 - 04/02/2020)** ((((MOVOL:380V , MOVOL:460V) + CAPPRM:ASME , CAPPRM:MHLW + MOVOL:460V) + FREQ:60HZ , (CAPPRM:AS1210 , CAPPRM:CE , CAPPRM:MHLW , CAPPRM:MOM) + FREQ:50HZ + MOVOL:400V) + CAPPRE:IEC , CAPPRE:ULCUL + CAPPRM:ASME + FREQ:60HZ + MOVOL:460V) + COOL:WATER **(05/02/2020 - ...)**	1X4
	1088 0039 36	4	TERMINAL	**(25/02/2019 - 04/02/2020)** ((((MOVOL:380V , MOVOL:460V) + CAPPRM:ASME , CAPPRM:MHLW + MOVOL:460V) + FREQ:60HZ , (CAPPRM:AS1210 , CAPPRM:CE , CAPPRM:MHLW , CAPPRM:MOM) + FREQ:50HZ + MOVOL:400V) + CAPPRE:IEC , CAPPRE:ULCUL + CAPPRM:ASME + FREQ:60HZ + MOVOL:460V) + COOL:WATER **(05/02/2020 - ...)**	1X6
	1088 0039 37	1	END PLATE	**(25/02/2019 - 04/02/2020)** ((((MOVOL:380V , MOVOL:460V) + CAPPRM:ASME , CAPPRM:MHLW + MOVOL:460V) + FREQ:60HZ , (CAPPRM:AS1210 , CAPPRM:CE , CAPPRM:MHLW , CAPPRM:MOM) + FREQ:50HZ + MOVOL:400V) + CAPPRE:IEC , CAPPRE:ULCUL + CAPPRM:ASME + FREQ:60HZ + MOVOL:460V) + COOL:WATER **(05/02/2020 - ...)**	1X4

Legend:

CAPPRE:IEC - Component approval electrical:IEC
CAPPRE:ULCUL - Component approval electrical:UL/cUL
CAPPRM:AS1210 - Component approval mechanical:AS1210
CAPPRM:ASME - Component approval mechanical:ASME
CAPPRM:CE - Component approval mechanical:CE
CAPPRM:MHLW - Component approval mechanical:MHLW
CAPPRM:MOM - Component approval mechanical:MOM
COOL:AIR - Cooling:Air cooled
COOL:WATER - Cooling:Water cooled
FREQ:50HZ - Frequency:50 Hz
FREQ:60HZ - Frequency:60 Hz
IDRY:N - Integrated dryer:No
MODEL:GA110VP_16 - Model:GA 110VSD+
MOVOL:380V - Supply voltage:380 V
MOVOL:400V - Supply voltage:400 V
MOVOL:460V - Supply voltage:460 V
MOVOL:500V - Supply voltage:500 V
MOVOL:575V - Supply voltage:575 V

21.25 - Cubicle components GA 110 VSD+ - (200V-380V-460V/60Hz - IEC, 230V-460V-575V/60Hz - UL-cUL, 200V-400V-500V/50Hz - IEC) - Pack (05/02/2020 - ...)

((((CAPPRM:AS1210 , CAPPRM:CE , CAPPRM:MHLW , CAPPRM:MOM) + MOVOL:400V , CAPPRM:CE + COOL:AIR + MOVOL:500V) + FREQ:50HZ , ((MOVOL:380V , MOVOL:460V) + CAPPRM:ASME , CAPPRM:MHLW + MOVOL:460V) + FREQ:60HZ) + CAPPRE:IEC , (COOL:AIR + MOVOL:575V , MOVOL:460V) + CAPPRE:ULCUL + CAPPRM:ASME + FREQ:60HZ) + IDRY:N + MODEL:GA110VP_16

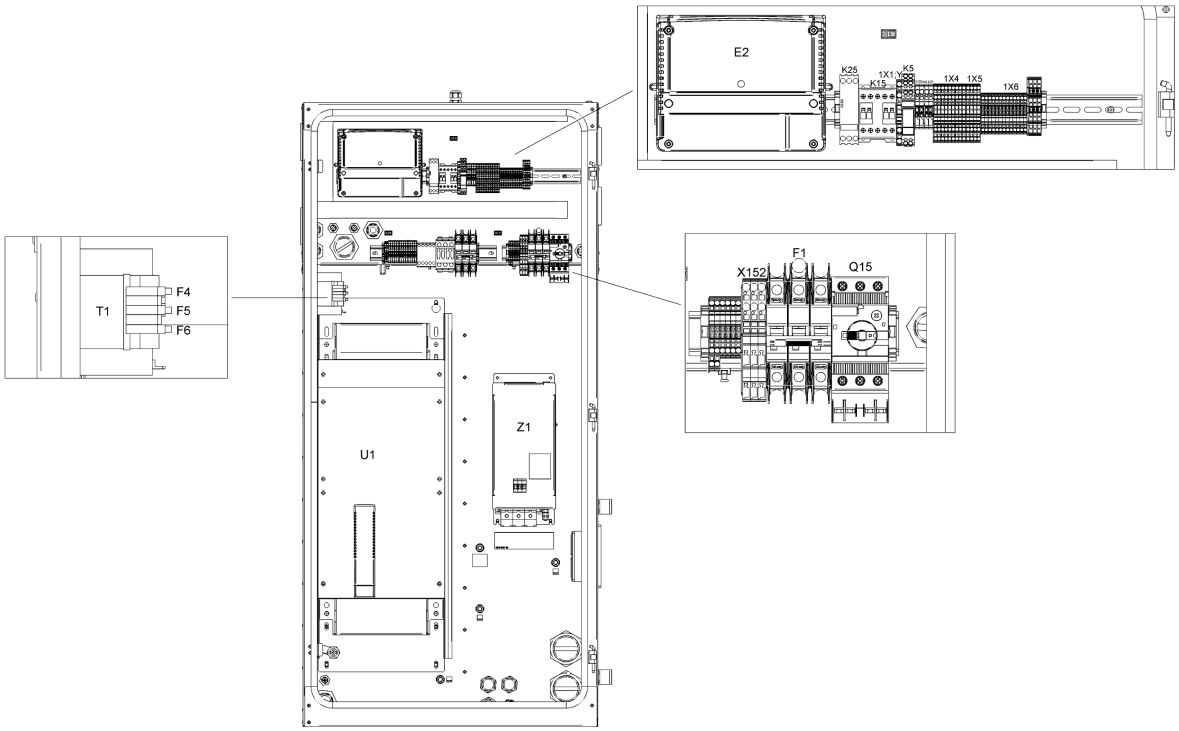

21.25 - Cubicle components GA 110 VSD+ - (200V-380V-460V/60Hz - IEC, 230V-460V-575V/60Hz - UL-cUL, 200V-400V-500V/50Hz - IEC) - Pack (05/02/2020 - ...)

((((CAPPRM:AS1210 , CAPPRM:CE , CAPPRM:MHLW , CAPPRM:MOM) + MOVOL:400V , CAPPRM:CE + COOL:AIR + MOVOL:500V) + FREQ:50HZ , ((MOVOL:380V , MOVOL:460V) + CAPPRM:ASME , CAPPRM:MHLW + MOVOL:460V) + FREQ:60HZ) + CAPPRE:IEC , (COOL:AIR + MOVOL:575V , MOVOL:460V) + CAPPRE:ULCUL + CAPPRM:ASME + FREQ:60HZ) + IDRY:N + MODEL:GA110VP_16

Ref	Part Number	Qty	Name	Validity	EL
	1088 0039 37	1	END PLATE	**(25/02/2019 - 04/02/2020)** ((((MOVOL:380V , MOVOL:460V) + CAPPRM:ASME , CAPPRM:MHLW + MOVOL:460V) + FREQ:60HZ , (CAPPRM:AS1210 , CAPPRM:CE , CAPPRM:MHLW , CAPPRM:MOM) + FREQ:50HZ + MOVOL:400V) + CAPPRE:IEC , CAPPRE:ULCUL + CAPPRM:ASME + FREQ:60HZ + MOVOL:460V) + COOL:WATER **(05/02/2020 - ...)**	1X6
	1088 0039 37	1	END PLATE	**(25/02/2019 - 04/02/2020)** ((((MOVOL:380V , MOVOL:460V) + CAPPRM:ASME , CAPPRM:MHLW + MOVOL:460V) + FREQ:60HZ , (CAPPRM:AS1210 , CAPPRM:CE , CAPPRM:MHLW , CAPPRM:MOM) + FREQ:50HZ + MOVOL:400V) + CAPPRE:IEC , CAPPRE:ULCUL + CAPPRM:ASME + FREQ:60HZ + MOVOL:460V) + COOL:WATER **(05/02/2020 - ...)**	1X1:Y/D
	1088 0037 81	1	CONNECTOR	**(25/02/2019 - 04/02/2020)** ((((MOVOL:380V , MOVOL:460V) + CAPPRM:ASME , CAPPRM:MHLW + MOVOL:460V) + FREQ:60HZ , (CAPPRM:AS1210 , CAPPRM:CE , CAPPRM:MHLW , CAPPRM:MOM) + FREQ:50HZ + MOVOL:400V) + CAPPRE:IEC , CAPPRE:ULCUL + CAPPRM:ASME + FREQ:60HZ + MOVOL:460V) + COOL:WATER **(05/02/2020 - ...)**	2X27
	1088 0037 80	1	CONNECTOR	**(25/02/2019 - 04/02/2020)** ((((MOVOL:380V , MOVOL:460V) + CAPPRM:ASME , CAPPRM:MHLW + MOVOL:460V) + FREQ:60HZ , (CAPPRM:AS1210 , CAPPRM:CE , CAPPRM:MHLW , CAPPRM:MOM) + FREQ:50HZ + MOVOL:400V) + CAPPRE:IEC , CAPPRE:ULCUL + CAPPRM:ASME + FREQ:60HZ + MOVOL:460V) + COOL:WATER **(05/02/2020 - ...)**	2X28
	1088 0031 32	1	CONNECTOR	**(25/02/2019 - 04/02/2020)** ((((MOVOL:380V , MOVOL:460V) + CAPPRM:ASME , CAPPRM:MHLW + MOVOL:460V) + FREQ:60HZ , (CAPPRM:AS1210 , CAPPRM:CE , CAPPRM:MHLW , CAPPRM:MOM) + FREQ:50HZ + MOVOL:400V) + CAPPRE:IEC , CAPPRE:ULCUL + CAPPRM:ASME + FREQ:60HZ + MOVOL:460V) + COOL:WATER **(05/02/2020 - ...)**	2X30
	1088 0031 26	1	CONNECTOR 6-POLE	**(25/02/2019 - 04/02/2020)** ((((MOVOL:380V , MOVOL:460V) + CAPPRM:ASME , CAPPRM:MHLW + MOVOL:460V) + FREQ:60HZ , (CAPPRM:AS1210 , CAPPRM:CE , CAPPRM:MHLW , CAPPRM:MOM) + FREQ:50HZ + MOVOL:400V) + CAPPRE:IEC , CAPPRE:ULCUL + CAPPRM:ASME + FREQ:60HZ + MOVOL:460V) + COOL:WATER **(05/02/2020 - ...)**	2X31
	~~1089 9664 06~~	1	SWITCH	**(25/02/2019 - 04/02/2020)** ((((MOVOL:380V , MOVOL:460V) + CAPPRM:ASME , CAPPRM:MHLW + MOVOL:460V) + FREQ:60HZ , (CAPPRM:AS1210 , CAPPRM:CE , CAPPRM:MHLW , CAPPRM:MOM) + FREQ:50HZ + MOVOL:400V) + CAPPRE:IEC , CAPPRE:ULCUL + CAPPRM:ASME + FREQ:60HZ + MOVOL:460V) + COOL:WATER **(05/02/2020 - ...)**	Q15
	Substituted by:	1089 9551 97 - AUX.CONTACT CIRCUIT BREAKER (quantity: 1)			

Legend:

CAPPRE:IEC - Component approval electrical:IEC	CAPPRE:ULCUL - Component approval electrical:UL/cUL	CAPPRM:AS1210 - Component approval mechanical:AS1210
CAPPRM:ASME - Component approval mechanical:ASME	CAPPRM:CE - Component approval mechanical:CE	CAPPRM:MHLW - Component approval mechanical:MHLW
CAPPRM:MOM - Component approval mechanical:MOM	COOL:AIR - Cooling:Air cooled	COOL:WATER - Cooling:Water cooled
FREQ:50HZ - Frequency:50 Hz	FREQ:60HZ - Frequency:60 Hz	IDRY:N - Integrated dryer:No
MODEL:GA110VP_16 - Model:GA 110VSD+	MOVOL:380V - Supply voltage:380 V	MOVOL:400V - Supply voltage:400 V
MOVOL:460V - Supply voltage:460 V	MOVOL:500V - Supply voltage:500 V	MOVOL:575V - Supply voltage:575 V

21.25 - Cubicle components GA 110 VSD+ - (200V-380V-460V/60Hz - IEC, 230V-460V-575V/60Hz - UL-cUL, 200V-400V-500V/50Hz - IEC) - Pack (05/02/2020 - ...)

((((CAPPRM:AS1210 , CAPPRM:CE , CAPPRM:MHLW , CAPPRM:MOM) + MOVOL:400V , CAPPRM:CE + COOL:AIR + MOVOL:500V) + FREQ:50HZ , ((MOVOL:380V , MOVOL:460V) + CAPPRM:ASME , CAPPRM:MHLW + MOVOL:460V) + FREQ:60HZ) + CAPPRE:IEC , (COOL:AIR + MOVOL:575V , MOVOL:460V) + CAPPRE:ULCUL + CAPPRM:ASME + FREQ:60HZ) + IDRY:N + MODEL:GA110VP_16

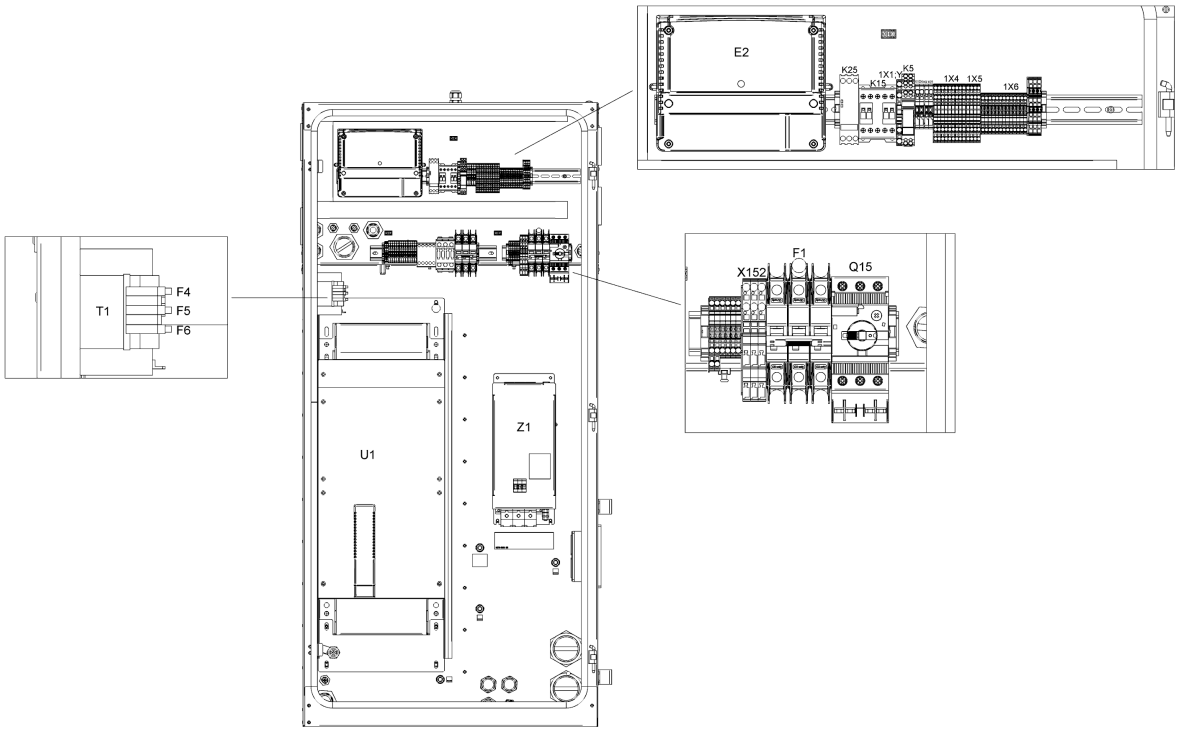

21.25 - Cubicle components GA 110 VSD+ - (200V-380V-460V/60Hz - IEC, 230V-460V-575V/60Hz - UL-cUL, 200V-400V-500V/50Hz - IEC) - Pack (05/02/2020 - ...)

((((CAPPRM:AS1210 , CAPPRM:CE , CAPPRM:MHLW , CAPPRM:MOM) + MOVOL:400V , CAPPRM:CE + COOL:AIR + MOVOL:500V) + FREQ:50HZ , ((MOVOL:380V , MOVOL:460V) + CAPPRM:ASME , CAPPRM:MHLW + MOVOL:460V) + FREQ:60HZ) + CAPPRE:IEC , (COOL:AIR + MOVOL:575V , MOVOL:460V) + CAPPRE:ULCUL + CAPPRM:ASME + FREQ:60HZ) + IDRY:N + MODEL:GA110VP_16

Ref	Part Number	Qty	Name	Validity	EL
	1089 9551 19	1	CIRCUIT BREAKER	**(25/02/2019 - 04/02/2020)** ((((MOVOL:380V , MOVOL:460V) + CAPPRM:ASME , CAPPRM:MHLW + MOVOL:460V) + FREQ:60HZ , (CAPPRM:AS1210 , CAPPRM:CE , CAPPRM:MHLW , CAPPRM:MOM) + FREQ:50HZ + MOVOL:400V) + CAPPRE:IEC , CAPPRE:ULCUL + CAPPRM:ASME + FREQ:60HZ + MOVOL:460V) + COOL:WATER **(05/02/2020 - ...)**	Q15
	1088 0038 26	1	TERMINAL	**(25/02/2019 - 04/02/2020)** ((((MOVOL:380V , MOVOL:460V) + CAPPRM:ASME , CAPPRM:MHLW + MOVOL:460V) + FREQ:60HZ , (CAPPRM:AS1210 , CAPPRM:CE , CAPPRM:MHLW , CAPPRM:MOM) + FREQ:50HZ + MOVOL:400V) + CAPPRE:IEC , CAPPRE:ULCUL + CAPPRM:ASME + FREQ:60HZ + MOVOL:460V) + COOL:WATER **(05/02/2020 - ...)**	1X1:Y/D
	1089 9602 79	1	CONTACTOR	**(25/02/2019 - 04/02/2020)** ((((MOVOL:380V , MOVOL:460V) + CAPPRM:ASME , CAPPRM:MHLW + MOVOL:460V) + FREQ:60HZ , (CAPPRM:AS1210 , CAPPRM:CE , CAPPRM:MHLW , CAPPRM:MOM) + FREQ:50HZ + MOVOL:400V) + CAPPRE:IEC , CAPPRE:ULCUL + CAPPRM:ASME + FREQ:60HZ + MOVOL:460V) + COOL:WATER **(05/02/2020 - ...)**	K15
	1089 9461 26	1	PHASE SEQUENCE RELAY	**(25/02/2019 - 04/02/2020)** ((((MOVOL:380V , MOVOL:460V) + CAPPRM:ASME , CAPPRM:MHLW + MOVOL:460V) + FREQ:60HZ , (CAPPRM:AS1210 , CAPPRM:CE , CAPPRM:MHLW , CAPPRM:MOM) + FREQ:50HZ + MOVOL:400V) + CAPPRE:IEC , CAPPRE:ULCUL + CAPPRM:ASME + FREQ:60HZ + MOVOL:460V) + COOL:WATER **(05/02/2020 - ...)**	K25
	1088 0032 17	1	RELAY 115 VAC	**(25/02/2019 - 04/02/2020)** ((((MOVOL:380V , MOVOL:460V) + CAPPRM:ASME , CAPPRM:MHLW + MOVOL:460V) + FREQ:60HZ , (CAPPRM:AS1210 , CAPPRM:CE , CAPPRM:MHLW , CAPPRM:MOM) + FREQ:50HZ + MOVOL:400V) + CAPPRE:IEC , CAPPRE:ULCUL + CAPPRM:ASME + FREQ:60HZ + MOVOL:460V) + COOL:WATER **(05/02/2020 - ...)**	K5
	0991 8011 21	AR	CABLE TRAY	**(25/02/2019 - 04/02/2020)** ((((MOVOL:380V , MOVOL:460V) + CAPPRM:ASME , CAPPRM:MHLW + MOVOL:460V) + FREQ:60HZ , (CAPPRM:AS1210 , CAPPRM:CE , CAPPRM:MHLW , CAPPRM:MOM) + FREQ:50HZ + MOVOL:400V) + CAPPRE:IEC , CAPPRE:ULCUL + CAPPRM:ASME + FREQ:60HZ + MOVOL:460V) + COOL:WATER **(05/02/2020 - ...)**	L=1384mm
	0697 9811 16	1	PLUG	**(25/02/2019 - 04/02/2020)** ((((MOVOL:380V , MOVOL:460V) + CAPPRM:ASME , CAPPRM:MHLW + MOVOL:460V) + FREQ:60HZ , (CAPPRM:AS1210 , CAPPRM:CE , CAPPRM:MHLW , CAPPRM:MOM) + FREQ:50HZ + MOVOL:400V) + CAPPRE:IEC , CAPPRE:ULCUL + CAPPRM:ASME + FREQ:60HZ + MOVOL:460V) + COOL:WATER **(05/02/2020 - ...)**	
	Electrical legend:	Plug for Dryer			

Legend:

CAPPRE:IEC - Component approval electrical:IEC
CAPPRM:ASME - Component approval mechanical:ASME
CAPPRM:MOM - Component approval mechanical:MOM
FREQ:50HZ - Frequency:50 Hz
MODEL:GA110VP_16 - Model:GA 110VSD+
MOVOL:460V - Supply voltage:460 V
CAPPRE:ULCUL - Component approval electrical:UL/cUL
CAPPRM:CE - Component approval mechanical:CE
COOL:AIR - Cooling:Air cooled
FREQ:60HZ - Frequency:60 Hz
MOVOL:380V - Supply voltage:380 V
MOVOL:500V - Supply voltage:500 V
CAPPRM:AS1210 - Component approval mechanical:AS1210
CAPPRM:MHLW - Component approval mechanical:MHLW
COOL:WATER - Cooling:Water cooled
IDRY:N - Integrated dryer:No
MOVOL:400V - Supply voltage:400 V
MOVOL:575V - Supply voltage:575 V

21.25 - Cubicle components GA 110 VSD+ - (200V-380V-460V/60Hz - IEC, 230V-460V-575V/60Hz - UL-cUL, 200V-400V-500V/50Hz - IEC) - Pack (05/02/2020 - ...)

((((CAPPRM:AS1210 , CAPPRM:CE , CAPPRM:MHLW , CAPPRM:MOM) + MOVOL:400V , CAPPRM:CE + COOL:AIR + MOVOL:500V) + FREQ:50HZ , ((MOVOL:380V , MOVOL:460V) + CAPPRM:ASME , CAPPRM:MHLW + MOVOL:460V) + FREQ:60HZ) + CAPPRE:IEC , (COOL:AIR + MOVOL:575V , MOVOL:460V) + CAPPRE:ULCUL + CAPPRM:ASME + FREQ:60HZ) + IDRY:N + MODEL:GA110VP_16

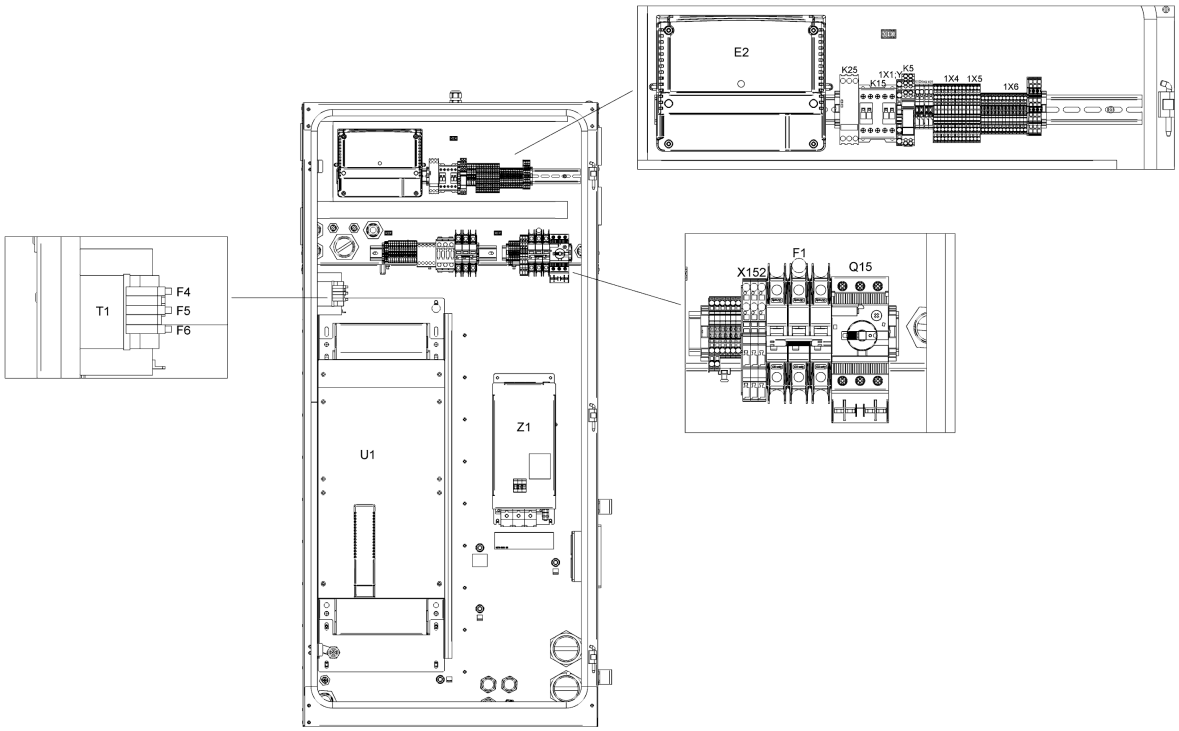

Ref	Part Number	Qty	Name	Validity	EL
	0989 3700 47	1	LOCKNUT	**(25/02/2019 - 04/02/2020)** ((((MOVOL:380V , MOVOL:460V) + CAPPRM:ASME , CAPPRM:MHLW + MOVOL:460V) + FREQ:60HZ , (CAPPRM:AS1210 , CAPPRM:CE , CAPPRM:MHLW , CAPPRM:MOM) + FREQ:50HZ + MOVOL:400V) + CAPPRE:IEC , CAPPRE:ULCUL + CAPPRM:ASME + FREQ:60HZ + MOVOL:460V) + COOL:WATER **(05/02/2020 - ...)**	
	Electrical legend:	Locknut for dryer			
	0697 9811 11	2	PLUG	**(25/02/2019 - 04/02/2020)** ((((MOVOL:380V , MOVOL:460V) + CAPPRM:ASME , CAPPRM:MHLW + MOVOL:460V) + FREQ:60HZ , (CAPPRM:AS1210 , CAPPRM:CE , CAPPRM:MHLW , CAPPRM:MOM) + FREQ:50HZ + MOVOL:400V) + CAPPRE:IEC , CAPPRE:ULCUL + CAPPRM:ASME + FREQ:60HZ + MOVOL:460V) + COOL:WATER **(05/02/2020 - ...)**	
	Electrical legend:	Plug for FF Drain/LAT			
	0989 3700 42	2	NUT	**(25/02/2019 - 04/02/2020)** ((((MOVOL:380V , MOVOL:460V) + CAPPRM:ASME , CAPPRM:MHLW + MOVOL:460V) + FREQ:60HZ , (CAPPRM:AS1210 , CAPPRM:CE , CAPPRM:MHLW , CAPPRM:MOM) + FREQ:50HZ + MOVOL:400V) + CAPPRE:IEC , CAPPRE:ULCUL + CAPPRM:ASME + FREQ:60HZ + MOVOL:460V) + COOL:WATER **(05/02/2020 - ...)**	
	Electrical legend:	Locknut for FF Drain/LAT			
	1088 0031 13	1	CONNECTOR 13-POLE	**(25/02/2019 - 04/02/2020)** ((((MOVOL:380V , MOVOL:460V) + CAPPRM:ASME , CAPPRM:MHLW + MOVOL:460V) + FREQ:60HZ , (CAPPRM:AS1210 , CAPPRM:CE , CAPPRM:MHLW , CAPPRM:MOM) + FREQ:50HZ + MOVOL:400V) + CAPPRE:IEC , CAPPRE:ULCUL + CAPPRM:ASME + FREQ:60HZ + MOVOL:460V) + COOL:WATER **(05/02/2020 - ...)**	1X30
	1088 0037 82	1	CONNECTOR	**(25/02/2019 - 04/02/2020)** ((((MOVOL:380V , MOVOL:460V) + CAPPRM:ASME , CAPPRM:MHLW + MOVOL:460V) + FREQ:60HZ , (CAPPRM:AS1210 , CAPPRM:CE , CAPPRM:MHLW , CAPPRM:MOM) + FREQ:50HZ + MOVOL:400V) + CAPPRE:IEC , CAPPRE:ULCUL + CAPPRM:ASME + FREQ:60HZ + MOVOL:460V) + COOL:WATER **(05/02/2020 - ...)**	3X34
	0697 9811 13	1	PLUG	**(25/02/2019 - 04/02/2020)** ((((MOVOL:380V , MOVOL:460V) + CAPPRM:ASME , CAPPRM:MHLW + MOVOL:460V) + FREQ:60HZ , (CAPPRM:AS1210 , CAPPRM:CE , CAPPRM:MHLW , CAPPRM:MOM) + FREQ:50HZ + MOVOL:400V) + CAPPRE:IEC , CAPPRE:ULCUL + CAPPRM:ASME + FREQ:60HZ + MOVOL:460V) + COOL:WATER **(05/02/2020 - ...)**	
	Electrical legend:	Energy recovery			
	0989 3700 44	1	LOCKNUT	**(25/02/2019 - 04/02/2020)** ((((MOVOL:380V , MOVOL:460V) + CAPPRM:ASME , CAPPRM:MHLW + MOVOL:460V) + FREQ:60HZ , (CAPPRM:AS1210 , CAPPRM:CE , CAPPRM:MHLW , CAPPRM:MOM) + FREQ:50HZ + MOVOL:400V) + CAPPRE:IEC , CAPPRE:ULCUL + CAPPRM:ASME + FREQ:60HZ + MOVOL:460V) + COOL:WATER **(05/02/2020 - ...)**	
	Electrical legend:	Energy recovery			

Legend:

CAPPRE:IEC - Component approval electrical:IEC
CAPPRE:ULCUL - Component approval electrical:UL/cUL
CAPPRM:AS1210 - Component approval mechanical:AS1210
CAPPRM:ASME - Component approval mechanical:ASME
CAPPRM:CE - Component approval mechanical:CE
CAPPRM:MHLW - Component approval mechanical:MHLW
CAPPRM:MOM - Component approval mechanical:MOM
COOL:AIR - Cooling:Air cooled
COOL:WATER - Cooling:Water cooled
FREQ:50HZ - Frequency:50 Hz
FREQ:60HZ - Frequency:60 Hz
IDRY:N - Integrated dryer:No
MODEL:GA110VP_16 - Model:GA 110VSD+
MOVOL:380V - Supply voltage:380 V
MOVOL:400V - Supply voltage:400 V
MOVOL:460V - Supply voltage:460 V
MOVOL:500V - Supply voltage:500 V
MOVOL:575V - Supply voltage:575 V

21.25 - Cubicle components GA 110 VSD+ - (200V-380V-460V/60Hz - IEC, 230V-460V-575V/60Hz - UL-cUL, 200V-400V-500V/50Hz - IEC) - Pack (05/02/2020 - ...)

((((CAPPRM:AS1210 , CAPPRM:CE , CAPPRM:MHLW , CAPPRM:MOM) + MOVOL:400V , CAPPRM:CE + COOL:AIR + MOVOL:500V) + FREQ:50HZ , ((MOVOL:380V , MOVOL:460V) + CAPPRM:ASME , CAPPRM:MHLW + MOVOL:460V) + FREQ:60HZ) + CAPPRE:IEC , (COOL:AIR + MOVOL:575V , MOVOL:460V) + CAPPRE:ULCUL + CAPPRM:ASME + FREQ:60HZ) + IDRY:N + MODEL:GA110VP_16

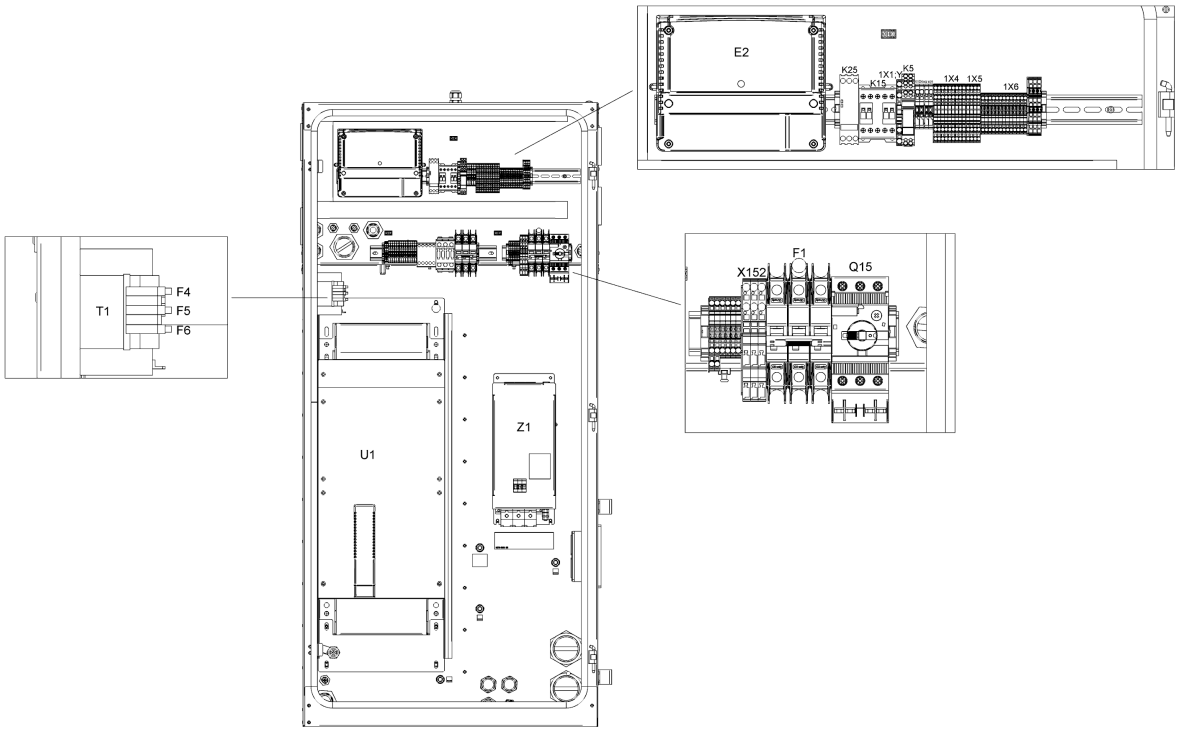

21.25 - Cubicle components GA 110 VSD+ - (200V-380V-460V/60Hz - IEC, 230V-460V-575V/60Hz - UL-cUL, 200V-400V-500V/50Hz - IEC) - Pack (05/02/2020 - ...)

((((CAPPRM:AS1210 , CAPPRM:CE , CAPPRM:MHLW , CAPPRM:MOM) + MOVOL:400V , CAPPRM:CE + COOL:AIR + MOVOL:500V) + FREQ:50HZ , ((MOVOL:380V , MOVOL:460V) + CAPPRM:ASME , CAPPRM:MHLW + MOVOL:460V) + FREQ:60HZ) + CAPPRE:IEC , (COOL:AIR + MOVOL:575V , MOVOL:460V) + CAPPRE:ULCUL + CAPPRM:ASME + FREQ:60HZ) + IDRY:N + MODEL:GA110VP_16

Ref	Part Number	Qty	Name	Validity	EL
	0697 9811 12	1	PLUG	**(25/02/2019 - 04/02/2020)** ((((MOVOL:380V , MOVOL:460V) + CAPPRM:ASME , CAPPRM:MHLW + MOVOL:460V) + FREQ:60HZ , (CAPPRM:AS1210 , CAPPRM:CE , CAPPRM:MHLW , CAPPRM:MOM) + FREQ:50HZ + MOVOL:400V) + CAPPRE:IEC , CAPPRE:ULCUL + CAPPRM:ASME + FREQ:60HZ + MOVOL:460V) + COOL:WATER **(05/02/2020 - ...)**	
	Electrical legend:	Control circuit of T10			
	0989 3700 43	1	NUT	**(25/02/2019 - 04/02/2020)** ((((MOVOL:380V , MOVOL:460V) + CAPPRM:ASME , CAPPRM:MHLW + MOVOL:460V) + FREQ:60HZ , (CAPPRM:AS1210 , CAPPRM:CE , CAPPRM:MHLW , CAPPRM:MOM) + FREQ:50HZ + MOVOL:400V) + CAPPRE:IEC , CAPPRE:ULCUL + CAPPRM:ASME + FREQ:60HZ + MOVOL:460V) + COOL:WATER **(05/02/2020 - ...)**	
	Electrical legend:	Control circuit of T10			
	0697 9811 10	1	PLUG	**(25/02/2019 - 04/02/2020)** ((((MOVOL:380V , MOVOL:460V) + CAPPRM:ASME , CAPPRM:MHLW + MOVOL:460V) + FREQ:60HZ , (CAPPRM:AS1210 , CAPPRM:CE , CAPPRM:MHLW , CAPPRM:MOM) + FREQ:50HZ + MOVOL:400V) + CAPPRE:IEC , CAPPRE:ULCUL + CAPPRM:ASME + FREQ:60HZ + MOVOL:460V) + COOL:WATER **(05/02/2020 - ...)**	
	Electrical legend:	Plug for smartbox hole			
	0989 3700 41	1	LOCKNUT	**(25/02/2019 - 04/02/2020)** ((((MOVOL:380V , MOVOL:460V) + CAPPRM:ASME , CAPPRM:MHLW + MOVOL:460V) + FREQ:60HZ , (CAPPRM:AS1210 , CAPPRM:CE , CAPPRM:MHLW , CAPPRM:MOM) + FREQ:50HZ + MOVOL:400V) + CAPPRE:IEC , CAPPRE:ULCUL + CAPPRM:ASME + FREQ:60HZ + MOVOL:460V) + COOL:WATER **(05/02/2020 - ...)**	
	Electrical legend:	Nut for smartbox hole			
	1089 9556 37	1	AIR INLET WITH FILTER	**(25/02/2019 - 04/02/2020)** ((((MOVOL:380V , MOVOL:460V) + CAPPRM:ASME , CAPPRM:MHLW + MOVOL:460V) + FREQ:60HZ , (CAPPRM:AS1210 , CAPPRM:CE , CAPPRM:MHLW , CAPPRM:MOM) + FREQ:50HZ + MOVOL:400V) + CAPPRE:IEC , CAPPRE:ULCUL + CAPPRM:ASME + FREQ:60HZ + MOVOL:460V) + COOL:WATER **(05/02/2020 - ...)**	Fan Filter

Legend:

CAPPRE:IEC - Component approval electrical:IEC
CAPPRE:ULCUL - Component approval electrical:UL/cUL
CAPPRM:AS1210 - Component approval mechanical:AS1210
CAPPRM:ASME - Component approval mechanical:ASME
CAPPRM:CE - Component approval mechanical:CE
CAPPRM:MHLW - Component approval mechanical:MHLW
CAPPRM:MOM - Component approval mechanical:MOM
COOL:AIR - Cooling:Air cooled
COOL:WATER - Cooling:Water cooled
FREQ:50HZ - Frequency:50 Hz
FREQ:60HZ - Frequency:60 Hz
IDRY:N - Integrated dryer:No
MODEL:GA110VP_16 - Model:GA 110VSD+
MOVOL:380V - Supply voltage:380 V
MOVOL:400V - Supply voltage:400 V
MOVOL:460V - Supply voltage:460 V
MOVOL:500V - Supply voltage:500 V
MOVOL:575V - Supply voltage:575 V

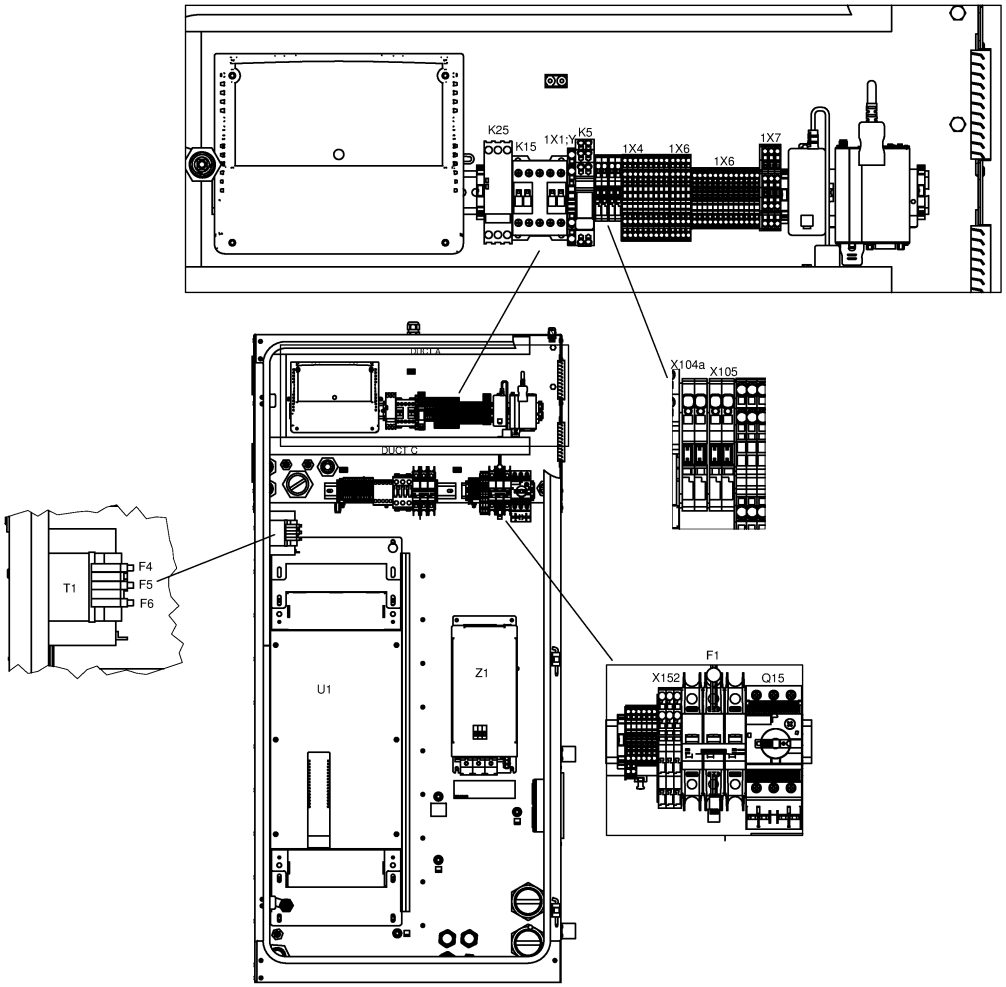
K25
K15
1X1:Y
K5
1X4
1X6
1X6
1X7
X104a
X105
DUCT A
DUCT C
T1
F4
F5
F6
U1
Z1
F1
X152
Q15

21.26 - Cubicle components GA 110 VSD+ - (200V-400V-500V/50Hz, 460V/60Hz - IEC, 230V-460V-575V/60Hz - UL-cUL) - Full-Feature (20/07/2017 - 11/12/2018)

(((MOVOL:200V , MOVOL:400V , MOVOL:500V) + FREQ:50HZ , FREQ:60HZ + MOVOL:460V) + CAPPRE:IEC , (MOVOL:230V , MOVOL:460V , MOVOL:575V) + CAPPRE:ULCUL + FREQ:60HZ) + IDRY:Y + MODEL:GA110VP_16

Ref	Part Number	Qty	Name	Validity	EL
	1900 2202 17	1	CUBICLE	**(20/07/2017 - 11/12/2018)**	
	9820 3000 21	-	CUBICLE LAYOUT	**(20/07/2017 - 20/08/2018)** ((((CAPPRM:AS1210 , CAPPRM:CE , CAPPRM:MHLW , CAPPRM:MOM) + MOVOL:400V , CAPPRM:CE + MOVOL:500V , CAPPRM:MHLW + MOVOL:200V) + FREQ:50HZ , (CAPPRM:ASME , CAPPRM:MHLW) + FREQ:60HZ + MOVOL:460V) + CAPPRE:IEC , (MOVOL:230V , MOVOL:460V , MOVOL:575V) + CAPPRE:ULCUL + CAPPRM:ASME + FREQ:60HZ) + COOL:AIR **(21/08/2018 - 10/12/2018)** ((((CAPPRM:AS1210 , CAPPRM:CE , CAPPRM:MHLW , CAPPRM:MOM) + MOVOL:400V , (CAPPRM:CE + MOVOL:500V , CAPPRM:MHLW + MOVOL:200V) + COOL:AIR) + FREQ:50HZ , (CAPPRM:ASME , CAPPRM:MHLW) + FREQ:60HZ + MOVOL:460V) + CAPPRE:IEC , ((MOVOL:230V , MOVOL:575V) + COOL:AIR , MOVOL:460V) + CAPPRE:ULCUL + CAPPRM:ASME + FREQ:60HZ) **(11/12/2018 - 11/12/2018)** ((((CAPPRM:AS1210 , CAPPRM:CE , CAPPRM:MHLW , CAPPRM:MOM) + MOVOL:400V , (CAPPRM:CE + MOVOL:500V , CAPPRM:MHLW + MOVOL:200V) + COOL:AIR) + FREQ:50HZ , (CAPPRM:ASME , CAPPRM:MHLW) + COOL:WATER + FREQ:60HZ + MOVOL:460V) + CAPPRE:IEC , ((MOVOL:230V , MOVOL:575V) + COOL:AIR , MOVOL:460V) + CAPPRE:ULCUL + CAPPRM:ASME + FREQ:60HZ)	-
	9820 3000 22	-	SERVICE DIAGRAM	**(20/07/2017 - 20/08/2018)** ((((CAPPRM:AS1210 , CAPPRM:CE , CAPPRM:MHLW , CAPPRM:MOM) + MOVOL:400V , CAPPRM:CE + MOVOL:500V , CAPPRM:MHLW + MOVOL:200V) + FREQ:50HZ , (CAPPRM:ASME , CAPPRM:MHLW) + FREQ:60HZ + MOVOL:460V) + CAPPRE:IEC , (MOVOL:230V , MOVOL:460V , MOVOL:575V) + CAPPRE:ULCUL + CAPPRM:ASME + FREQ:60HZ) + COOL:AIR **(21/08/2018 - 10/12/2018)** ((((CAPPRM:AS1210 , CAPPRM:CE , CAPPRM:MHLW , CAPPRM:MOM) + MOVOL:400V , (CAPPRM:CE + MOVOL:500V , CAPPRM:MHLW + MOVOL:200V) + COOL:AIR) + FREQ:50HZ , (CAPPRM:ASME , CAPPRM:MHLW) + FREQ:60HZ + MOVOL:460V) + CAPPRE:IEC , ((MOVOL:230V , MOVOL:575V) + COOL:AIR , MOVOL:460V) + CAPPRE:ULCUL + CAPPRM:ASME + FREQ:60HZ) **(11/12/2018 - 11/12/2018)** ((((CAPPRM:AS1210 , CAPPRM:CE , CAPPRM:MHLW , CAPPRM:MOM) + MOVOL:400V , (CAPPRM:CE + MOVOL:500V , CAPPRM:MHLW + MOVOL:200V) + COOL:AIR) + FREQ:50HZ , (CAPPRM:ASME , CAPPRM:MHLW) + COOL:WATER + FREQ:60HZ + MOVOL:460V) + CAPPRE:IEC , ((MOVOL:230V , MOVOL:575V) + COOL:AIR , MOVOL:460V) + CAPPRE:ULCUL + CAPPRM:ASME + FREQ:60HZ)	-

Legend:

CAPPRE:IEC - Component approval electrical:IEC
CAPPRE:ULCUL - Component approval electrical:UL/cUL
CAPPRM:AS1210 - Component approval mechanical:AS1210
CAPPRM:ASME - Component approval mechanical:ASME
CAPPRM:CE - Component approval mechanical:CE
CAPPRM:MHLW - Component approval mechanical:MHLW
CAPPRM:MOM - Component approval mechanical:MOM
COOL:AIR - Cooling:Air cooled
COOL:WATER - Cooling:Water cooled
FREQ:50HZ - Frequency:50 Hz
FREQ:60HZ - Frequency:60 Hz
IDRY:Y - Integrated dryer:Yes
MODEL:GA110VP_16 - Model:GA 110VSD+
MOVOL:200V - Supply voltage:200 V
MOVOL:230V - Supply voltage:230 V
MOVOL:400V - Supply voltage:400 V
MOVOL:460V - Supply voltage:460 V
MOVOL:500V - Supply voltage:500 V
MOVOL:575V - Supply voltage:575 V

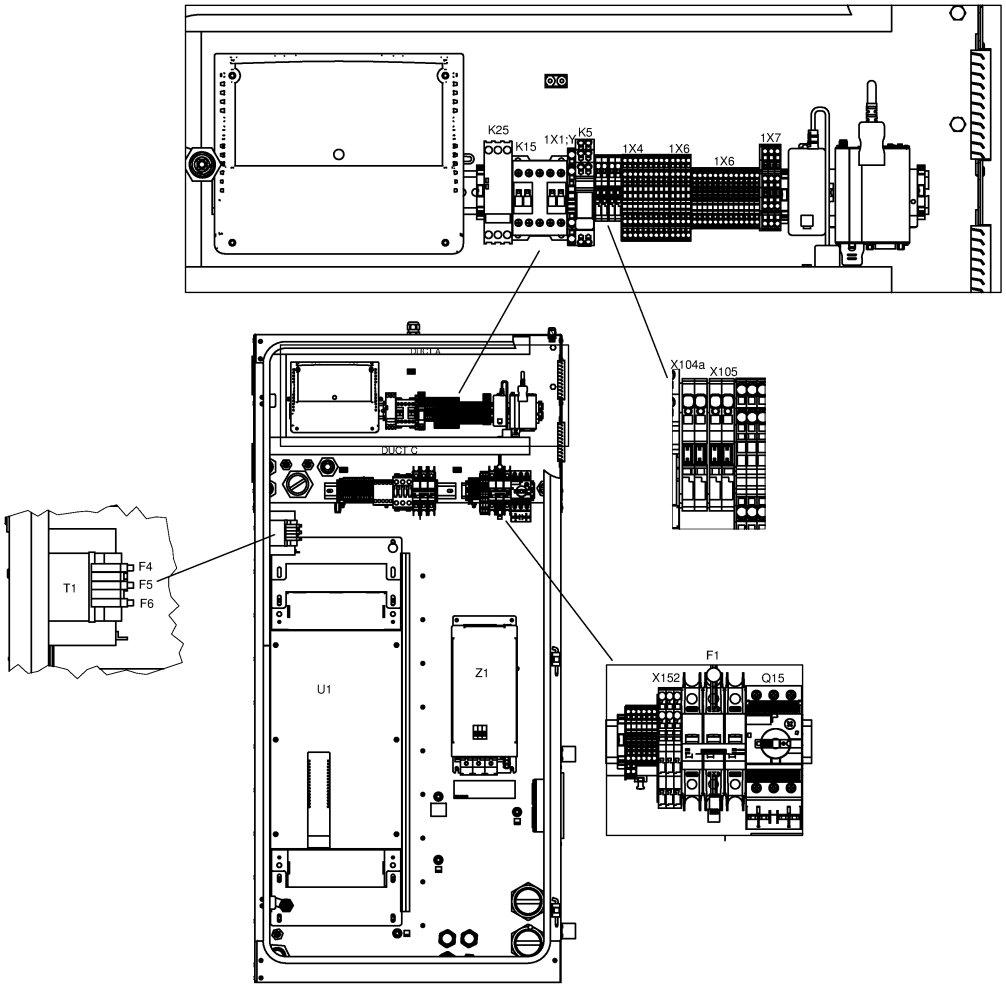
K25
K15
1X1:Y
K5
1X4
1X6
1X6
1X7
X104a
X105
DUCT A
DUCT C
T1
F4
F5
F6
U1
Z1
F1
X152
Q15

21.26 - Cubicle components GA 110 VSD+ - (200V-400V-500V/50Hz, 460V/60Hz - IEC, 230V-460V-575V/60Hz - UL-cUL) - Full-Feature (20/07/2017 - 11/12/2018)

(((MOVOL:200V , MOVOL:400V , MOVOL:500V) + FREQ:50HZ , FREQ:60HZ + MOVOL:460V) + CAPPRE:IEC , (MOVOL:230V , MOVOL:460V , MOVOL:575V) + CAPPRE:ULCUL + FREQ:60HZ) + IDRY:Y + MODEL:GA110VP_16

Ref	Part Number	Qty	Name	Validity	EL
	1622 3798 70	1	WIRE HARNESS COMM CABLE	**(20/07/2017 - 20/08/2018)** ((((CAPPRM:AS1210 , CAPPRM:CE , CAPPRM:MHLW , CAPPRM:MOM) + MOVOL:400V , CAPPRM:CE + MOVOL:500V , CAPPRM:MHLW + MOVOL:200V) + FREQ:50HZ , (CAPPRM:ASME , CAPPRM:MHLW) + FREQ:60HZ + MOVOL:460V) + CAPPRE:IEC , (MOVOL:230V , MOVOL:460V , MOVOL:575V) + CAPPRE:ULCUL + CAPPRM:ASME + FREQ:60HZ) + COOL:AIR **(21/08/2018 - 10/12/2018)** ((((CAPPRM:AS1210 , CAPPRM:CE , CAPPRM:MHLW , CAPPRM:MOM) + MOVOL:400V , (CAPPRM:CE + MOVOL:500V , CAPPRM:MHLW + MOVOL:200V) + COOL:AIR) + FREQ:50HZ , (CAPPRM:ASME , CAPPRM:MHLW) + FREQ:60HZ + MOVOL:460V) + CAPPRE:IEC , ((MOVOL:230V , MOVOL:575V) + COOL:AIR , MOVOL:460V) + CAPPRE:ULCUL + CAPPRM:ASME + FREQ:60HZ) **(11/12/2018 - 11/12/2018)** ((((CAPPRM:AS1210 , CAPPRM:CE , CAPPRM:MHLW , CAPPRM:MOM) + MOVOL:400V , (CAPPRM:CE + MOVOL:500V , CAPPRM:MHLW + MOVOL:200V) + COOL:AIR) + FREQ:50HZ , (CAPPRM:ASME , CAPPRM:MHLW) + COOL:WATER + FREQ:60HZ + MOVOL:460V) + CAPPRE:IEC , ((MOVOL:230V , MOVOL:575V) + COOL:AIR , MOVOL:460V) + CAPPRE:ULCUL + CAPPRM:ASME + FREQ:60HZ)	-
	1622 5099 04	1	COMMUNICATION CABLE	**(20/07/2017 - 20/08/2018)** ((((CAPPRM:AS1210 , CAPPRM:CE , CAPPRM:MHLW , CAPPRM:MOM) + MOVOL:400V , CAPPRM:CE + MOVOL:500V , CAPPRM:MHLW + MOVOL:200V) + FREQ:50HZ , (CAPPRM:ASME , CAPPRM:MHLW) + FREQ:60HZ + MOVOL:460V) + CAPPRE:IEC , (MOVOL:230V , MOVOL:460V , MOVOL:575V) + CAPPRE:ULCUL + CAPPRM:ASME + FREQ:60HZ) + COOL:AIR **(21/08/2018 - 10/12/2018)** ((((CAPPRM:AS1210 , CAPPRM:CE , CAPPRM:MHLW , CAPPRM:MOM) + MOVOL:400V , (CAPPRM:CE + MOVOL:500V , CAPPRM:MHLW + MOVOL:200V) + COOL:AIR) + FREQ:50HZ , (CAPPRM:ASME , CAPPRM:MHLW) + FREQ:60HZ + MOVOL:460V) + CAPPRE:IEC , ((MOVOL:230V , MOVOL:575V) + COOL:AIR , MOVOL:460V) + CAPPRE:ULCUL + CAPPRM:ASME + FREQ:60HZ) **(11/12/2018 - 11/12/2018)** ((((CAPPRM:AS1210 , CAPPRM:CE , CAPPRM:MHLW , CAPPRM:MOM) + MOVOL:400V , (CAPPRM:CE + MOVOL:500V , CAPPRM:MHLW + MOVOL:200V) + COOL:AIR) + FREQ:50HZ , (CAPPRM:ASME , CAPPRM:MHLW) + COOL:WATER + FREQ:60HZ + MOVOL:460V) + CAPPRE:IEC , ((MOVOL:230V , MOVOL:575V) + COOL:AIR , MOVOL:460V) + CAPPRE:ULCUL + CAPPRM:ASME + FREQ:60HZ)	

Electrical legend: Comm Cable Loose supply

Legend:

CAPPRE:IEC - Component approval electrical:IEC
CAPPRM:ASME - Component approval mechanical:ASME
CAPPRM:MOM - Component approval mechanical:MOM
FREQ:50HZ - Frequency:50 Hz
MODEL:GA110VP_16 - Model:GA 110VSD+
MOVOL:400V - Supply voltage:400 V
MOVOL:575V - Supply voltage:575 V
CAPPRE:ULCUL - Component approval electrical:UL/cUL
CAPPRM:CE - Component approval mechanical:CE
COOL:AIR - Cooling:Air cooled
FREQ:60HZ - Frequency:60 Hz
MOVOL:200V - Supply voltage:200 V
MOVOL:460V - Supply voltage:460 V
CAPPRM:AS1210 - Component approval mechanical:AS1210
CAPPRM:MHLW - Component approval mechanical:MHLW
COOL:WATER - Cooling:Water cooled
IDRY:Y - Integrated dryer:Yes
MOVOL:230V - Supply voltage:230 V
MOVOL:500V - Supply voltage:500 V

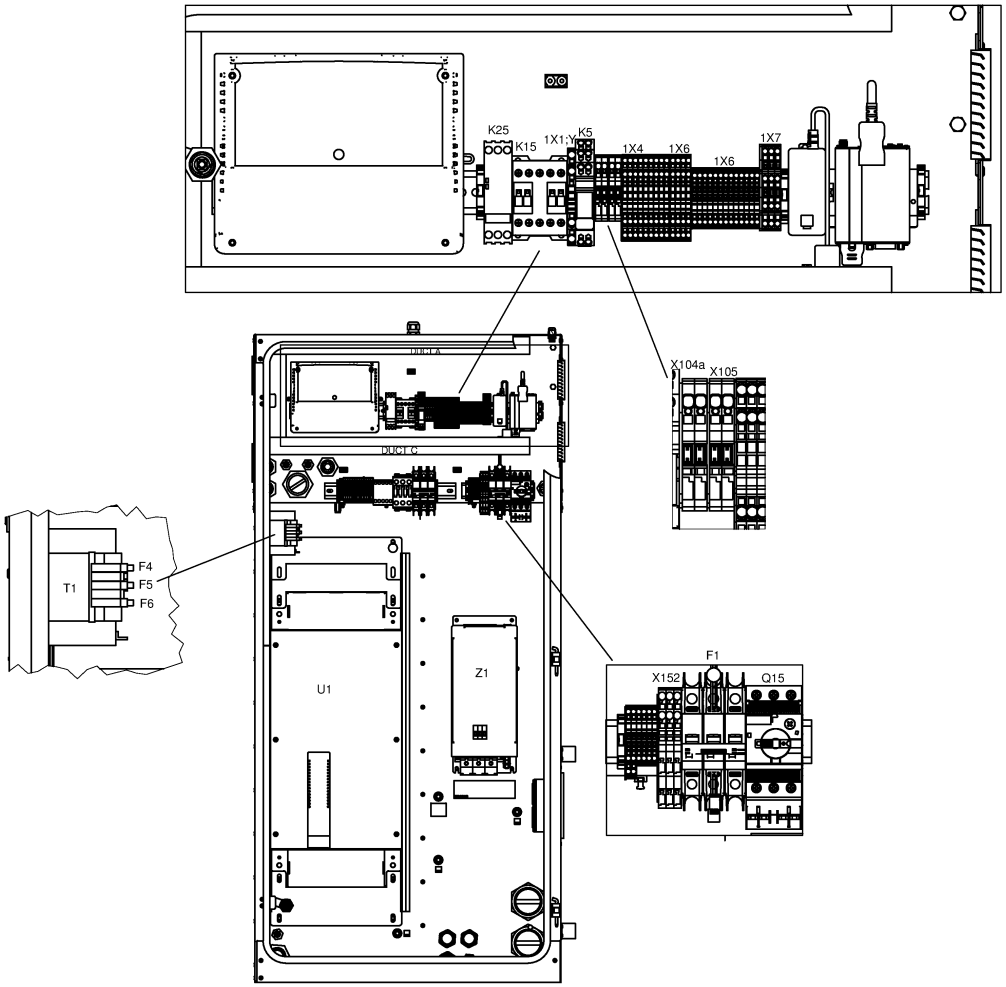
K25
K15
1X1:Y
K5
1X4
1X6
1X6
1X7
DUCT A
DUCT C
X104a
X105
T1
F4
F5
F6
U1
Z1
F1
X152
Q15

21.26 - Cubicle components GA 110 VSD+ - (200V-400V-500V/50Hz, 460V/60Hz - IEC, 230V-460V-575V/60Hz - UL-cUL) - Full-Feature (20/07/2017 - 11/12/2018)

(((MOVOL:200V , MOVOL:400V , MOVOL:500V) + FREQ:50HZ , FREQ:60HZ + MOVOL:460V) + CAPPRE:IEC , (MOVOL:230V , MOVOL:460V , MOVOL:575V) + CAPPRE:ULCUL + FREQ:60HZ) + IDRY:Y + MODEL:GA110VP_16

Ref	Part Number	Qty	Name	Validity	EL
	1649 8001 22	1	CUBICLE	**(20/07/2017 - 20/08/2018)** ((((CAPPRM:AS1210 , CAPPRM:CE , CAPPRM:MHLW , CAPPRM:MOM) + MOVOL:400V , CAPPRM:CE + MOVOL:500V , CAPPRM:MHLW + MOVOL:200V) + FREQ:50HZ , (CAPPRM:ASME , CAPPRM:MHLW) + FREQ:60HZ + MOVOL:460V) + CAPPRE:IEC , (MOVOL:230V , MOVOL:460V , MOVOL:575V) + CAPPRE:ULCUL + CAPPRM:ASME + FREQ:60HZ) + COOL:AIR **(21/08/2018 - 10/12/2018)** ((((CAPPRM:AS1210 , CAPPRM:CE , CAPPRM:MHLW , CAPPRM:MOM) + MOVOL:400V , (CAPPRM:CE + MOVOL:500V , CAPPRM:MHLW + MOVOL:200V) + COOL:AIR) + FREQ:50HZ , (CAPPRM:ASME , CAPPRM:MHLW) + FREQ:60HZ + MOVOL:460V) + CAPPRE:IEC , ((MOVOL:230V , MOVOL:575V) + COOL:AIR , MOVOL:460V) + CAPPRE:ULCUL + CAPPRM:ASME + FREQ:60HZ) **(11/12/2018 - 11/12/2018)** ((((CAPPRM:AS1210 , CAPPRM:CE , CAPPRM:MHLW , CAPPRM:MOM) + MOVOL:400V , (CAPPRM:CE + MOVOL:500V , CAPPRM:MHLW + MOVOL:200V) + COOL:AIR) + FREQ:50HZ , (CAPPRM:ASME , CAPPRM:MHLW) + COOL:WATER + FREQ:60HZ + MOVOL:460V) + CAPPRE:IEC , ((MOVOL:230V , MOVOL:575V) + COOL:AIR , MOVOL:460V) + CAPPRE:ULCUL + CAPPRM:ASME + FREQ:60HZ)	-
•	1202 6584 02	AR	SEAL		-
	1649 8001 31	1	PLATE NEOS "E"	**(20/07/2017 - 20/08/2018)** ((((CAPPRM:AS1210 , CAPPRM:CE , CAPPRM:MHLW , CAPPRM:MOM) + MOVOL:400V , CAPPRM:CE + MOVOL:500V , CAPPRM:MHLW + MOVOL:200V) + FREQ:50HZ , (CAPPRM:ASME , CAPPRM:MHLW) + FREQ:60HZ + MOVOL:460V) + CAPPRE:IEC , (MOVOL:230V , MOVOL:460V , MOVOL:575V) + CAPPRE:ULCUL + CAPPRM:ASME + FREQ:60HZ) + COOL:AIR **(21/08/2018 - 10/12/2018)** ((((CAPPRM:AS1210 , CAPPRM:CE , CAPPRM:MHLW , CAPPRM:MOM) + MOVOL:400V , (CAPPRM:CE + MOVOL:500V , CAPPRM:MHLW + MOVOL:200V) + COOL:AIR) + FREQ:50HZ , (CAPPRM:ASME , CAPPRM:MHLW) + FREQ:60HZ + MOVOL:460V) + CAPPRE:IEC , ((MOVOL:230V , MOVOL:575V) + COOL:AIR , MOVOL:460V) + CAPPRE:ULCUL + CAPPRM:ASME + FREQ:60HZ) **(11/12/2018 - 11/12/2018)** ((((CAPPRM:AS1210 , CAPPRM:CE , CAPPRM:MHLW , CAPPRM:MOM) + MOVOL:400V , (CAPPRM:CE + MOVOL:500V , CAPPRM:MHLW + MOVOL:200V) + COOL:AIR) + FREQ:50HZ , (CAPPRM:ASME , CAPPRM:MHLW) + COOL:WATER + FREQ:60HZ + MOVOL:460V) + CAPPRE:IEC , ((MOVOL:230V , MOVOL:575V) + COOL:AIR , MOVOL:460V) + CAPPRE:ULCUL + CAPPRM:ASME + FREQ:60HZ)	-

Legend:

CAPPRE:IEC - Component approval electrical:IEC
CAPPRE:ULCUL - Component approval electrical:UL/cUL
CAPPRM:AS1210 - Component approval mechanical:AS1210
CAPPRM:ASME - Component approval mechanical:ASME
CAPPRM:CE - Component approval mechanical:CE
CAPPRM:MHLW - Component approval mechanical:MHLW
CAPPRM:MOM - Component approval mechanical:MOM
COOL:AIR - Cooling:Air cooled
COOL:WATER - Cooling:Water cooled
FREQ:50HZ - Frequency:50 Hz
FREQ:60HZ - Frequency:60 Hz
IDRY:Y - Integrated dryer:Yes
MODEL:GA110VP_16 - Model:GA 110VSD+
MOVOL:200V - Supply voltage:200 V
MOVOL:230V - Supply voltage:230 V
MOVOL:400V - Supply voltage:400 V
MOVOL:460V - Supply voltage:460 V
MOVOL:500V - Supply voltage:500 V
MOVOL:575V - Supply voltage:575 V

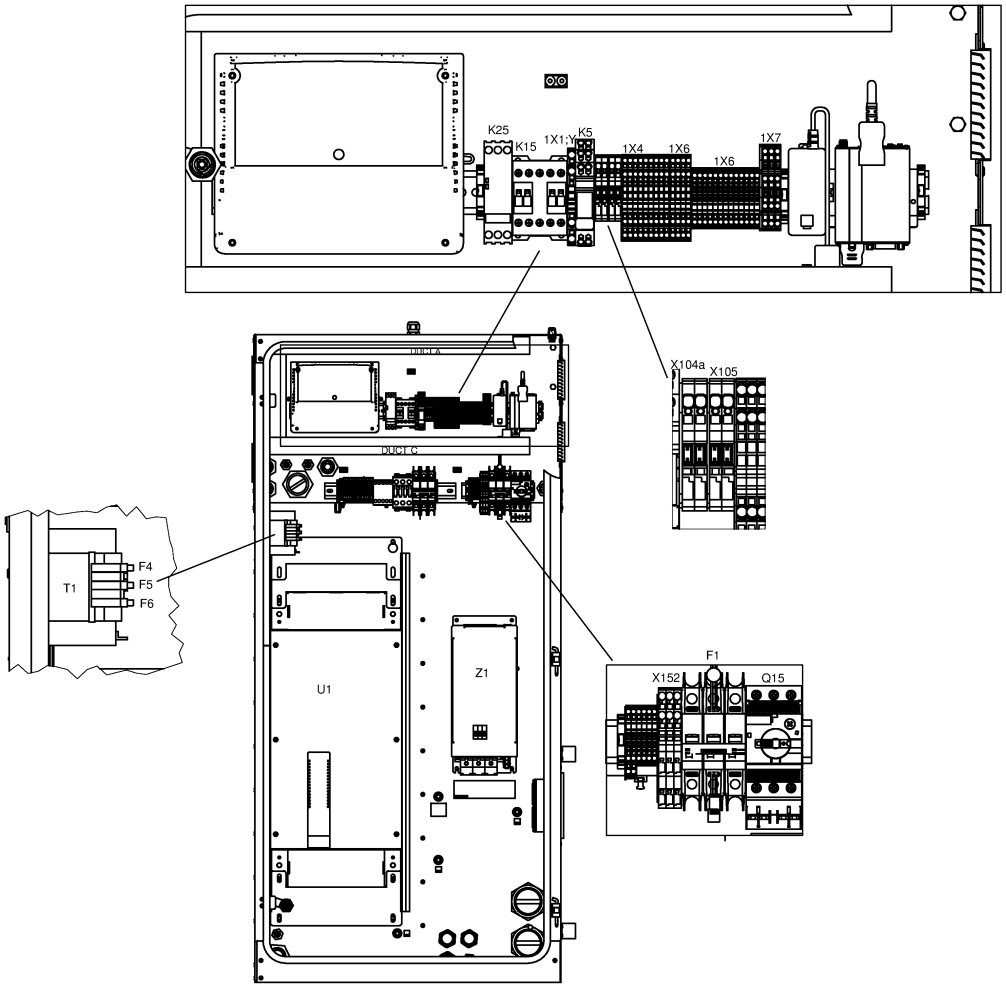
K25
K15
1X1:Y
K5
1X4
1X6
1X6
1X7
X104a
X105
DUCT A
DUCT C
T1
F4
F5
F6
U1
Z1
F1
X152
Q15

21.26 - Cubicle components GA 110 VSD+ - (200V-400V-500V/50Hz, 460V/60Hz - IEC, 230V-460V-575V/60Hz - UL-cUL) - Full-Feature (20/07/2017 - 11/12/2018)

(((MOVOL:200V , MOVOL:400V , MOVOL:500V) + FREQ:50HZ , FREQ:60HZ + MOVOL:460V) + CAPPRE:IEC , (MOVOL:230V , MOVOL:460V , MOVOL:575V) + CAPPRE:ULCUL + FREQ:60HZ) + IDRY:Y + MODEL:GA110VP_16

Ref	Part Number	Qty	Name	Validity	EL
	1649 8003 85	1	MOUNTING PLATE	**(20/07/2017 - 20/08/2018)** ((((CAPPRM:AS1210 , CAPPRM:CE , CAPPRM:MHLW , CAPPRM:MOM) + MOVOL:400V , CAPPRM:CE + MOVOL:500V , CAPPRM:MHLW + MOVOL:200V) + FREQ:50HZ , (CAPPRM:ASME , CAPPRM:MHLW) + FREQ:60HZ + MOVOL:460V) + CAPPRE:IEC , (MOVOL:230V , MOVOL:460V , MOVOL:575V) + CAPPRE:ULCUL + CAPPRM:ASME + FREQ:60HZ) + COOL:AIR **(21/08/2018 - 10/12/2018)** ((((CAPPRM:AS1210 , CAPPRM:CE , CAPPRM:MHLW , CAPPRM:MOM) + MOVOL:400V , (CAPPRM:CE + MOVOL:500V , CAPPRM:MHLW + MOVOL:200V) + COOL:AIR) + FREQ:50HZ , (CAPPRM:ASME , CAPPRM:MHLW) + FREQ:60HZ + MOVOL:460V) + CAPPRE:IEC , ((MOVOL:230V , MOVOL:575V) + COOL:AIR , MOVOL:460V) + CAPPRE:ULCUL + CAPPRM:ASME + FREQ:60HZ) **(11/12/2018 - 11/12/2018)** ((((CAPPRM:AS1210 , CAPPRM:CE , CAPPRM:MHLW , CAPPRM:MOM) + MOVOL:400V , (CAPPRM:CE + MOVOL:500V , CAPPRM:MHLW + MOVOL:200V) + COOL:AIR) + FREQ:50HZ , (CAPPRM:ASME , CAPPRM:MHLW) + COOL:WATER + FREQ:60HZ + MOVOL:460V) + CAPPRE:IEC , ((MOVOL:230V , MOVOL:575V) + COOL:AIR , MOVOL:460V) + CAPPRE:ULCUL + CAPPRM:ASME + FREQ:60HZ)	
	1649 8002 39	1	WIRE HARNESS	**(20/07/2017 - 20/08/2018)** ((((CAPPRM:AS1210 , CAPPRM:CE , CAPPRM:MHLW , CAPPRM:MOM) + MOVOL:400V , CAPPRM:CE + MOVOL:500V , CAPPRM:MHLW + MOVOL:200V) + FREQ:50HZ , (CAPPRM:ASME , CAPPRM:MHLW) + FREQ:60HZ + MOVOL:460V) + CAPPRE:IEC , (MOVOL:230V , MOVOL:460V , MOVOL:575V) + CAPPRE:ULCUL + CAPPRM:ASME + FREQ:60HZ) + COOL:AIR **(21/08/2018 - 10/12/2018)** ((((CAPPRM:AS1210 , CAPPRM:CE , CAPPRM:MHLW , CAPPRM:MOM) + MOVOL:400V , (CAPPRM:CE + MOVOL:500V , CAPPRM:MHLW + MOVOL:200V) + COOL:AIR) + FREQ:50HZ , (CAPPRM:ASME , CAPPRM:MHLW) + FREQ:60HZ + MOVOL:460V) + CAPPRE:IEC , ((MOVOL:230V , MOVOL:575V) + COOL:AIR , MOVOL:460V) + CAPPRE:ULCUL + CAPPRM:ASME + FREQ:60HZ) **(11/12/2018 - 11/12/2018)** ((((CAPPRM:AS1210 , CAPPRM:CE , CAPPRM:MHLW , CAPPRM:MOM) + MOVOL:400V , (CAPPRM:CE + MOVOL:500V , CAPPRM:MHLW + MOVOL:200V) + COOL:AIR) + FREQ:50HZ , (CAPPRM:ASME , CAPPRM:MHLW) + COOL:WATER + FREQ:60HZ + MOVOL:460V) + CAPPRE:IEC , ((MOVOL:230V , MOVOL:575V) + COOL:AIR , MOVOL:460V) + CAPPRE:ULCUL + CAPPRM:ASME + FREQ:60HZ)	
	Electrical legend:		Pressure switch (vessel) + pressure sensor vessel + pressure sensor outlet		
•	0698 5140 74	1	CABLE GLAND		

Legend:

CAPPRE:IEC - Component approval electrical:IEC
CAPPRM:ASME - Component approval mechanical:ASME
CAPPRM:MOM - Component approval mechanical:MOM
FREQ:50HZ - Frequency:50 Hz
MODEL:GA110VP_16 - Model:GA 110VSD+
MOVOL:400V - Supply voltage:400 V
MOVOL:575V - Supply voltage:575 V
CAPPRE:ULCUL - Component approval electrical:UL/cUL
CAPPRM:CE - Component approval mechanical:CE
COOL:AIR - Cooling:Air cooled
FREQ:60HZ - Frequency:60 Hz
MOVOL:200V - Supply voltage:200 V
MOVOL:460V - Supply voltage:460 V
CAPPRM:AS1210 - Component approval mechanical:AS1210
CAPPRM:MHLW - Component approval mechanical:MHLW
COOL:WATER - Cooling:Water cooled
IDRY:Y - Integrated dryer:Yes
MOVOL:230V - Supply voltage:230 V
MOVOL:500V - Supply voltage:500 V

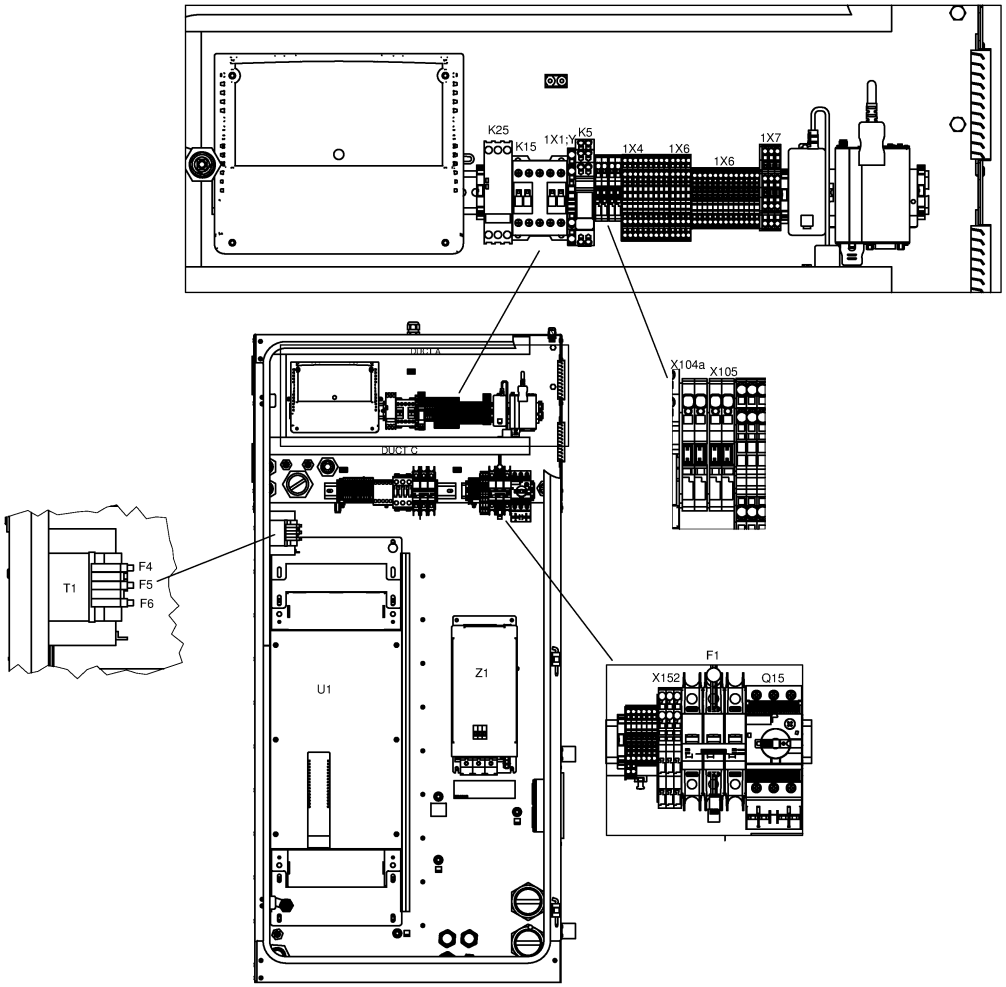
K25
K15
1X1:Y
K5
1X4
1X6
1X6
1X7
DUCT A
DUCT C
X104a
X105
T1
F4
F5
F6
U1
Z1
F1
X152
Q15

21.26 - Cubicle components GA 110 VSD+ - (200V-400V-500V/50Hz, 460V/60Hz - IEC, 230V-460V-575V/60Hz - UL-cUL) - Full-Feature (20/07/2017 - 11/12/2018)

(((MOVOL:200V , MOVOL:400V , MOVOL:500V) + FREQ:50HZ , FREQ:60HZ + MOVOL:460V) + CAPPRE:IEC , (MOVOL:230V , MOVOL:460V , MOVOL:575V) + CAPPRE:ULCUL + FREQ:60HZ) + IDRY:Y + MODEL:GA110VP_16

Ref	Part Number	Qty	Name	Validity	EL
	1649 8002 40	1	WIRE HARNESS	**(20/07/2017 - 20/08/2018)** ((((CAPPRM:AS1210 , CAPPRM:CE , CAPPRM:MHLW , CAPPRM:MOM) + MOVOL:400V , CAPPRM:CE + MOVOL:500V , CAPPRM:MHLW + MOVOL:200V) + FREQ:50HZ , (CAPPRM:ASME , CAPPRM:MHLW) + FREQ:60HZ + MOVOL:460V) + CAPPRE:IEC , (MOVOL:230V , MOVOL:460V , MOVOL:575V) + CAPPRE:ULCUL + CAPPRM:ASME + FREQ:60HZ) + COOL:AIR **(21/08/2018 - 10/12/2018)** ((((CAPPRM:AS1210 , CAPPRM:CE , CAPPRM:MHLW , CAPPRM:MOM) + MOVOL:400V , (CAPPRM:CE + MOVOL:500V , CAPPRM:MHLW + MOVOL:200V) + COOL:AIR) + FREQ:50HZ , (CAPPRM:ASME , CAPPRM:MHLW) + FREQ:60HZ + MOVOL:460V) + CAPPRE:IEC , ((MOVOL:230V , MOVOL:575V) + COOL:AIR , MOVOL:460V) + CAPPRE:ULCUL + CAPPRM:ASME + FREQ:60HZ) **(11/12/2018 - 11/12/2018)** ((((CAPPRM:AS1210 , CAPPRM:CE , CAPPRM:MHLW , CAPPRM:MOM) + MOVOL:400V , (CAPPRM:CE + MOVOL:500V , CAPPRM:MHLW + MOVOL:200V) + COOL:AIR) + FREQ:50HZ , (CAPPRM:ASME , CAPPRM:MHLW) + COOL:WATER + FREQ:60HZ + MOVOL:460V) + CAPPRE:IEC , ((MOVOL:230V , MOVOL:575V) + COOL:AIR , MOVOL:460V) + CAPPRE:ULCUL + CAPPRM:ASME + FREQ:60HZ)	
	Electrical legend:	Temperature switch element outlet + solenoids + ambient sensor			
•	0698 5140 74	1	CABLE GLAND		
	1649 8002 72	1	CABLE POWER	**(20/07/2017 - 20/08/2018)** ((((CAPPRM:AS1210 , CAPPRM:CE , CAPPRM:MHLW , CAPPRM:MOM) + MOVOL:400V , CAPPRM:CE + MOVOL:500V , CAPPRM:MHLW + MOVOL:200V) + FREQ:50HZ , (CAPPRM:ASME , CAPPRM:MHLW) + FREQ:60HZ + MOVOL:460V) + CAPPRE:IEC , (MOVOL:230V , MOVOL:460V , MOVOL:575V) + CAPPRE:ULCUL + CAPPRM:ASME + FREQ:60HZ) + COOL:AIR **(21/08/2018 - 10/12/2018)** ((((CAPPRM:AS1210 , CAPPRM:CE , CAPPRM:MHLW , CAPPRM:MOM) + MOVOL:400V , (CAPPRM:CE + MOVOL:500V , CAPPRM:MHLW + MOVOL:200V) + COOL:AIR) + FREQ:50HZ , (CAPPRM:ASME , CAPPRM:MHLW) + FREQ:60HZ + MOVOL:460V) + CAPPRE:IEC , ((MOVOL:230V , MOVOL:575V) + COOL:AIR , MOVOL:460V) + CAPPRE:ULCUL + CAPPRM:ASME + FREQ:60HZ) **(11/12/2018 - 11/12/2018)** ((((CAPPRM:AS1210 , CAPPRM:CE , CAPPRM:MHLW , CAPPRM:MOM) + MOVOL:400V , (CAPPRM:CE + MOVOL:500V , CAPPRM:MHLW + MOVOL:200V) + COOL:AIR) + FREQ:50HZ , (CAPPRM:ASME , CAPPRM:MHLW) + COOL:WATER + FREQ:60HZ + MOVOL:460V) + CAPPRE:IEC , ((MOVOL:230V , MOVOL:575V) + COOL:AIR , MOVOL:460V) + CAPPRE:ULCUL + CAPPRM:ASME + FREQ:60HZ)	
	Electrical legend:	Full feature (FF) Drain			

Legend:

CAPPRE:IEC - Component approval electrical:IEC
CAPPRM:ASME - Component approval mechanical:ASME
CAPPRM:MOM - Component approval mechanical:MOM
FREQ:50HZ - Frequency:50 Hz
MODEL:GA110VP_16 - Model:GA 110VSD+
MOVOL:400V - Supply voltage:400 V
MOVOL:575V - Supply voltage:575 V
CAPPRE:ULCUL - Component approval electrical:UL/cUL
CAPPRM:CE - Component approval mechanical:CE
COOL:AIR - Cooling:Air cooled
FREQ:60HZ - Frequency:60 Hz
MOVOL:200V - Supply voltage:200 V
MOVOL:460V - Supply voltage:460 V
CAPPRM:AS1210 - Component approval mechanical:AS1210
CAPPRM:MHLW - Component approval mechanical:MHLW
COOL:WATER - Cooling:Water cooled
IDRY:Y - Integrated dryer:Yes
MOVOL:230V - Supply voltage:230 V
MOVOL:500V - Supply voltage:500 V

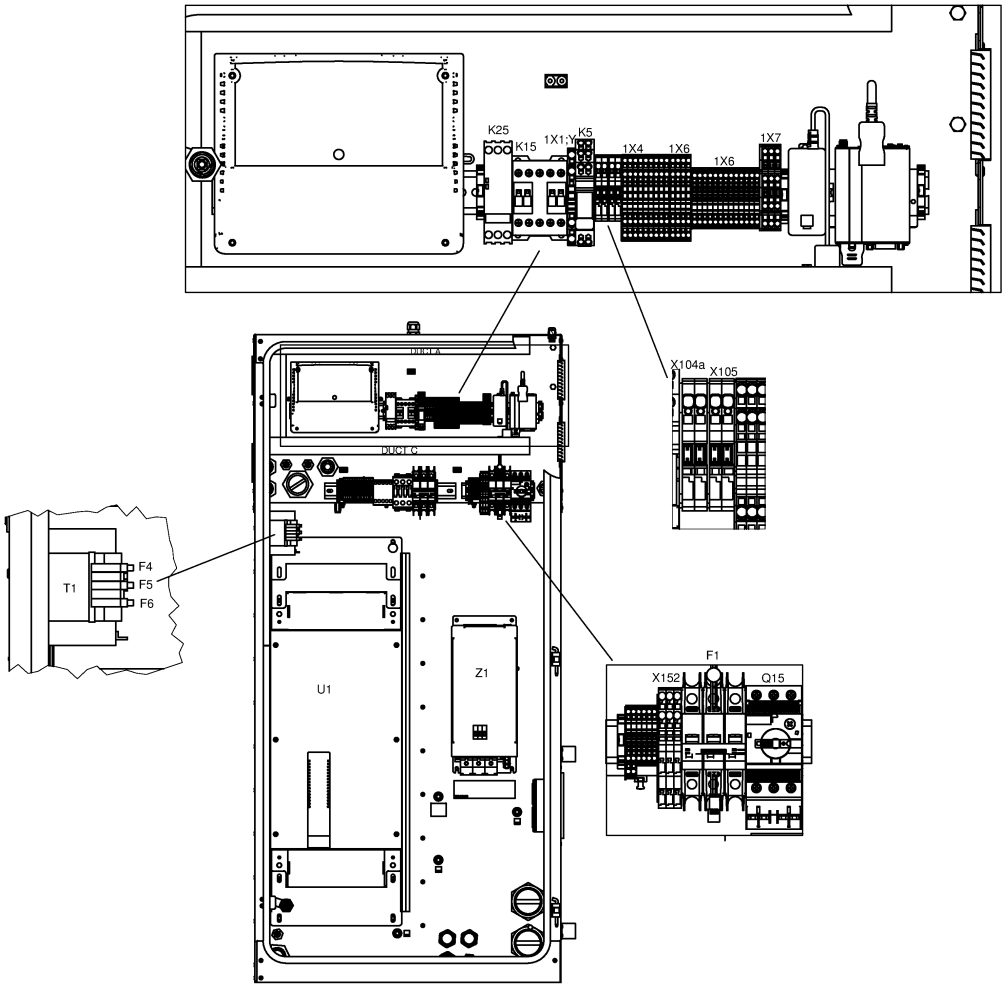
K25
K15
1X1:Y
K5
1X4
1X6
1X6
1X7
X104a
X105
DUCT A
DUCT C
T1
F4
F5
F6
U1
Z1
F1
X152
Q15

21.26 - Cubicle components GA 110 VSD+ - (200V-400V-500V/50Hz, 460V/60Hz - IEC, 230V-460V-575V/60Hz - UL-cUL) - Full-Feature (20/07/2017 - 11/12/2018)

(((MOVOL:200V , MOVOL:400V , MOVOL:500V) + FREQ:50HZ , FREQ:60HZ + MOVOL:460V) + CAPPRE:IEC , (MOVOL:230V , MOVOL:460V , MOVOL:575V) + CAPPRE:ULCUL + FREQ:60HZ) + IDRY:Y + MODEL:GA110VP_16

Ref	Part Number	Qty	Name	Validity	EL
	1649 8002 73	1	WIRE HARNESS	**(20/07/2017 - 20/08/2018)** ((((CAPPRM:AS1210 , CAPPRM:CE , CAPPRM:MHLW , CAPPRM:MOM) + MOVOL:400V , CAPPRM:CE + MOVOL:500V , CAPPRM:MHLW + MOVOL:200V) + FREQ:50HZ , (CAPPRM:ASME , CAPPRM:MHLW) + FREQ:60HZ + MOVOL:460V) + CAPPRE:IEC , (MOVOL:230V , MOVOL:460V , MOVOL:575V) + CAPPRE:ULCUL + CAPPRM:ASME + FREQ:60HZ) + COOL:AIR **(21/08/2018 - 10/12/2018)** ((((CAPPRM:AS1210 , CAPPRM:CE , CAPPRM:MHLW , CAPPRM:MOM) + MOVOL:400V , (CAPPRM:CE + MOVOL:500V , CAPPRM:MHLW + MOVOL:200V) + COOL:AIR) + FREQ:50HZ , (CAPPRM:ASME , CAPPRM:MHLW) + FREQ:60HZ + MOVOL:460V) + CAPPRE:IEC , ((MOVOL:230V , MOVOL:575V) + COOL:AIR , MOVOL:460V) + CAPPRE:ULCUL + CAPPRM:ASME + FREQ:60HZ) **(11/12/2018 - 11/12/2018)** ((((CAPPRM:AS1210 , CAPPRM:CE , CAPPRM:MHLW , CAPPRM:MOM) + MOVOL:400V , (CAPPRM:CE + MOVOL:500V , CAPPRM:MHLW + MOVOL:200V) + COOL:AIR) + FREQ:50HZ , (CAPPRM:ASME , CAPPRM:MHLW) + COOL:WATER + FREQ:60HZ + MOVOL:460V) + CAPPRE:IEC , ((MOVOL:230V , MOVOL:575V) + COOL:AIR , MOVOL:460V) + CAPPRE:ULCUL + CAPPRM:ASME + FREQ:60HZ)	
	Electrical legend:	Pack Drain + Air filter switch			
•	0698 5140 74	1	CABLE GLAND		
	1649 8002 75	1	WIRE HARNESS	**(20/07/2017 - 20/08/2018)** ((((CAPPRM:AS1210 , CAPPRM:CE , CAPPRM:MHLW , CAPPRM:MOM) + MOVOL:400V , CAPPRM:CE + MOVOL:500V , CAPPRM:MHLW + MOVOL:200V) + FREQ:50HZ , (CAPPRM:ASME , CAPPRM:MHLW) + FREQ:60HZ + MOVOL:460V) + CAPPRE:IEC , (MOVOL:230V , MOVOL:460V , MOVOL:575V) + CAPPRE:ULCUL + CAPPRM:ASME + FREQ:60HZ) + COOL:AIR **(21/08/2018 - 10/12/2018)** ((((CAPPRM:AS1210 , CAPPRM:CE , CAPPRM:MHLW , CAPPRM:MOM) + MOVOL:400V , (CAPPRM:CE + MOVOL:500V , CAPPRM:MHLW + MOVOL:200V) + COOL:AIR) + FREQ:50HZ , (CAPPRM:ASME , CAPPRM:MHLW) + FREQ:60HZ + MOVOL:460V) + CAPPRE:IEC , ((MOVOL:230V , MOVOL:575V) + COOL:AIR , MOVOL:460V) + CAPPRE:ULCUL + CAPPRM:ASME + FREQ:60HZ) **(11/12/2018 - 11/12/2018)** ((((CAPPRM:AS1210 , CAPPRM:CE , CAPPRM:MHLW , CAPPRM:MOM) + MOVOL:400V , (CAPPRM:CE + MOVOL:500V , CAPPRM:MHLW + MOVOL:200V) + COOL:AIR) + FREQ:50HZ , (CAPPRM:ASME , CAPPRM:MHLW) + COOL:WATER + FREQ:60HZ + MOVOL:460V) + CAPPRE:IEC , ((MOVOL:230V , MOVOL:575V) + COOL:AIR , MOVOL:460V) + CAPPRE:ULCUL + CAPPRM:ASME + FREQ:60HZ)	
	Electrical legend:	Relative Humidity sensor			
•	~~1089 9320 09~~	1	RH SENSOR		
	Substituted by:	1089 9320 10 - TEMP. SENSOR (quantity: 1)			
•	0698 5140 75	1	CABLE GLAND		

Legend:

CAPPRE:IEC - Component approval electrical:IEC
CAPPRM:ASME - Component approval mechanical:ASME
CAPPRM:MOM - Component approval mechanical:MOM
FREQ:50HZ - Frequency:50 Hz
MODEL:GA110VP_16 - Model:GA 110VSD+
MOVOL:400V - Supply voltage:400 V
MOVOL:575V - Supply voltage:575 V
CAPPRE:ULCUL - Component approval electrical:UL/cUL
CAPPRM:CE - Component approval mechanical:CE
COOL:AIR - Cooling:Air cooled
FREQ:60HZ - Frequency:60 Hz
MOVOL:200V - Supply voltage:200 V
MOVOL:460V - Supply voltage:460 V
CAPPRM:AS1210 - Component approval mechanical:AS1210
CAPPRM:MHLW - Component approval mechanical:MHLW
COOL:WATER - Cooling:Water cooled
IDRY:Y - Integrated dryer:Yes
MOVOL:230V - Supply voltage:230 V
MOVOL:500V - Supply voltage:500 V

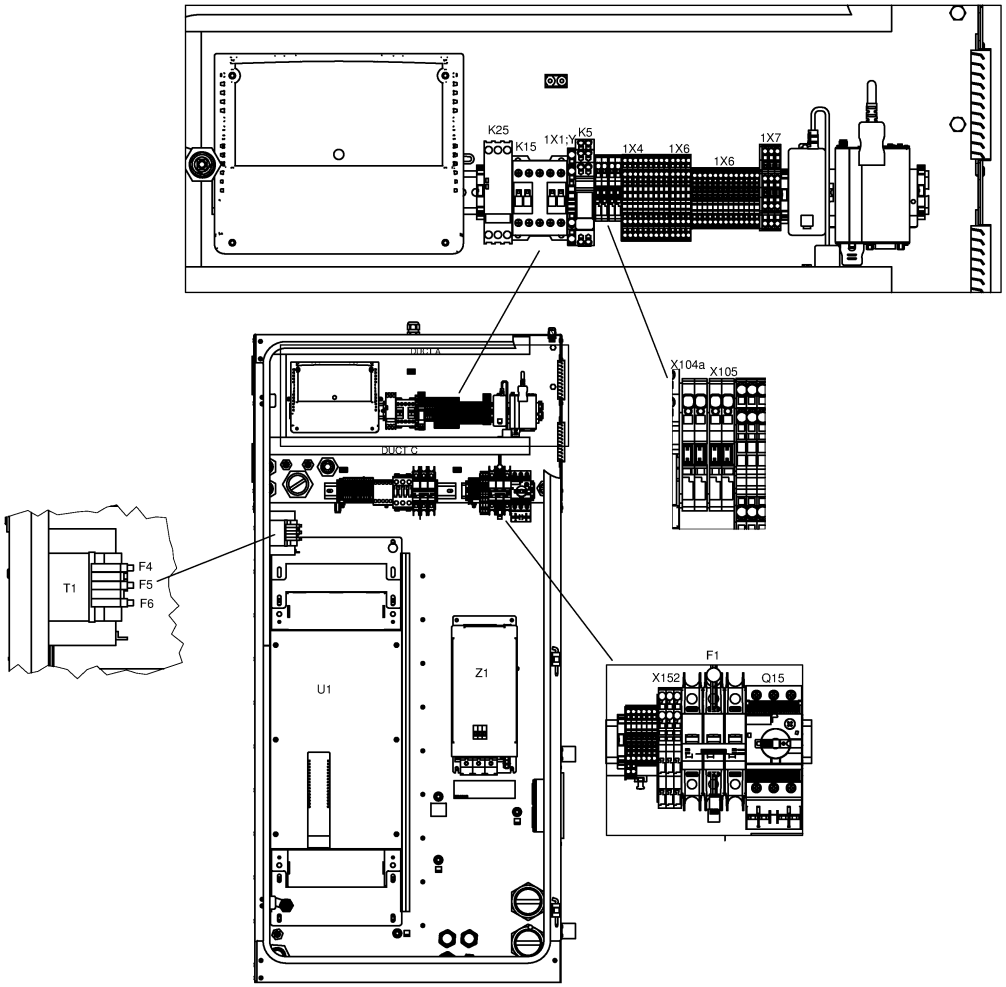
K25
K15
1X1:Y
K5
1X4
1X6
1X6
1X7
DUCT A
DUCT C
X104a
X105
T1
F4
F5
F6
U1
Z1
F1
X152
Q15

21.26 - Cubicle components GA 110 VSD+ - (200V-400V-500V/50Hz, 460V/60Hz - IEC, 230V-460V-575V/60Hz - UL-cUL) - Full-Feature (20/07/2017 - 11/12/2018)

(((MOVOL:200V , MOVOL:400V , MOVOL:500V) + FREQ:50HZ , FREQ:60HZ + MOVOL:460V) + CAPPRE:IEC , (MOVOL:230V , MOVOL:460V , MOVOL:575V) + CAPPRE:ULCUL + FREQ:60HZ) + IDRY:Y + MODEL:GA110VP_16

Ref	Part Number	Qty	Name	Validity	EL
	1649 8001 43	3	MOTOR CABLE	**(20/07/2017 - 20/08/2018)** ((((CAPPRM:AS1210 , CAPPRM:CE , CAPPRM:MHLW , CAPPRM:MOM) + MOVOL:400V , CAPPRM:CE + MOVOL:500V , CAPPRM:MHLW + MOVOL:200V) + FREQ:50HZ , (CAPPRM:ASME , CAPPRM:MHLW) + FREQ:60HZ + MOVOL:460V) + CAPPRE:IEC , (MOVOL:230V , MOVOL:460V , MOVOL:575V) + CAPPRE:ULCUL + CAPPRM:ASME + FREQ:60HZ) + COOL:AIR **(21/08/2018 - 10/12/2018)** ((((CAPPRM:AS1210 , CAPPRM:CE , CAPPRM:MHLW , CAPPRM:MOM) + MOVOL:400V , (CAPPRM:CE + MOVOL:500V , CAPPRM:MHLW + MOVOL:200V) + COOL:AIR) + FREQ:50HZ , (CAPPRM:ASME , CAPPRM:MHLW) + FREQ:60HZ + MOVOL:460V) + CAPPRE:IEC , ((MOVOL:230V , MOVOL:575V) + COOL:AIR , MOVOL:460V) + CAPPRE:ULCUL + CAPPRM:ASME + FREQ:60HZ) **(11/12/2018 - 11/12/2018)** ((((CAPPRM:AS1210 , CAPPRM:CE , CAPPRM:MHLW , CAPPRM:MOM) + MOVOL:400V , (CAPPRM:CE + MOVOL:500V , CAPPRM:MHLW + MOVOL:200V) + COOL:AIR) + FREQ:50HZ , (CAPPRM:ASME , CAPPRM:MHLW) + COOL:WATER + FREQ:60HZ + MOVOL:460V) + CAPPRE:IEC , ((MOVOL:230V , MOVOL:575V) + COOL:AIR , MOVOL:460V) + CAPPRE:ULCUL + CAPPRM:ASME + FREQ:60HZ)	-
	1649 8001 46	1	MOTOR CABLE	**(20/07/2017 - 20/08/2018)** ((((CAPPRM:AS1210 , CAPPRM:CE , CAPPRM:MHLW , CAPPRM:MOM) + MOVOL:400V , CAPPRM:CE + MOVOL:500V , CAPPRM:MHLW + MOVOL:200V) + FREQ:50HZ , (CAPPRM:ASME , CAPPRM:MHLW) + FREQ:60HZ + MOVOL:460V) + CAPPRE:IEC , (MOVOL:230V , MOVOL:460V , MOVOL:575V) + CAPPRE:ULCUL + CAPPRM:ASME + FREQ:60HZ) + COOL:AIR **(21/08/2018 - 10/12/2018)** ((((CAPPRM:AS1210 , CAPPRM:CE , CAPPRM:MHLW , CAPPRM:MOM) + MOVOL:400V , (CAPPRM:CE + MOVOL:500V , CAPPRM:MHLW + MOVOL:200V) + COOL:AIR) + FREQ:50HZ , (CAPPRM:ASME , CAPPRM:MHLW) + FREQ:60HZ + MOVOL:460V) + CAPPRE:IEC , ((MOVOL:230V , MOVOL:575V) + COOL:AIR , MOVOL:460V) + CAPPRE:ULCUL + CAPPRM:ASME + FREQ:60HZ) **(11/12/2018 - 11/12/2018)** ((((CAPPRM:AS1210 , CAPPRM:CE , CAPPRM:MHLW , CAPPRM:MOM) + MOVOL:400V , (CAPPRM:CE + MOVOL:500V , CAPPRM:MHLW + MOVOL:200V) + COOL:AIR) + FREQ:50HZ , (CAPPRM:ASME , CAPPRM:MHLW) + COOL:WATER + FREQ:60HZ + MOVOL:460V) + CAPPRE:IEC , ((MOVOL:230V , MOVOL:575V) + COOL:AIR , MOVOL:460V) + CAPPRE:ULCUL + CAPPRM:ASME + FREQ:60HZ)	

Legend:

CAPPRE:IEC - Component approval electrical:IEC
CAPPRM:ASME - Component approval mechanical:ASME
CAPPRM:MOM - Component approval mechanical:MOM
FREQ:50HZ - Frequency:50 Hz
MODEL:GA110VP_16 - Model:GA 110VSD+
MOVOL:400V - Supply voltage:400 V
MOVOL:575V - Supply voltage:575 V
CAPPRE:ULCUL - Component approval electrical:UL/cUL
CAPPRM:CE - Component approval mechanical:CE
COOL:AIR - Cooling:Air cooled
FREQ:60HZ - Frequency:60 Hz
MOVOL:200V - Supply voltage:200 V
MOVOL:460V - Supply voltage:460 V
CAPPRM:AS1210 - Component approval mechanical:AS1210
CAPPRM:MHLW - Component approval mechanical:MHLW
COOL:WATER - Cooling:Water cooled
IDRY:Y - Integrated dryer:Yes
MOVOL:230V - Supply voltage:230 V
MOVOL:500V - Supply voltage:500 V

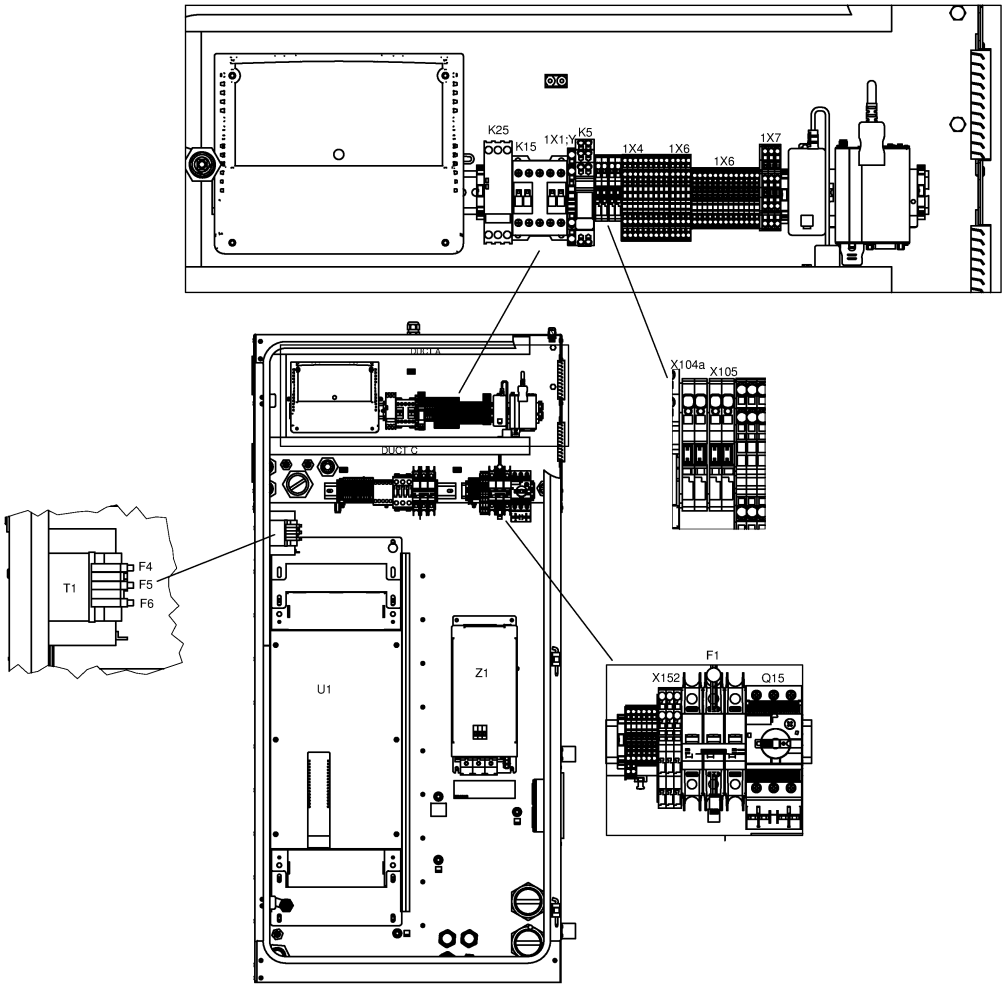
K25
K15
1X1:Y
K5
1X4
1X6
1X6
1X7
X104a
X105
DUCT A
DUCT C
T1
F4
F5
F6
U1
Z1
F1
X152
Q15

21.26 - Cubicle components GA 110 VSD+ - (200V-400V-500V/50Hz, 460V/60Hz - IEC, 230V-460V-575V/60Hz - UL-cUL) - Full-Feature (20/07/2017 - 11/12/2018)

(((MOVOL:200V , MOVOL:400V , MOVOL:500V) + FREQ:50HZ , FREQ:60HZ + MOVOL:460V) + CAPPRE:IEC , (MOVOL:230V , MOVOL:460V , MOVOL:575V) + CAPPRE:ULCUL + FREQ:60HZ) + IDRY:Y + MODEL:GA110VP_16

Ref	Part Number	Qty	Name	Validity	EL
		1	DATA LABEL	**(02/02/2018 - 20/08/2018)** ((((CAPPRM:AS1210 , CAPPRM:CE , CAPPRM:MHLW , CAPPRM:MOM) + MOVOL:400V , CAPPRM:CE + MOVOL:500V , CAPPRM:MHLW + MOVOL:200V) + FREQ:50HZ , (CAPPRM:ASME , CAPPRM:MHLW) + FREQ:60HZ + MOVOL:460V) + CAPPRE:IEC , (MOVOL:230V , MOVOL:460V , MOVOL:575V) + CAPPRE:ULCUL + CAPPRM:ASME + FREQ:60HZ) + COOL:AIR **(21/08/2018 - 10/12/2018)** ((((CAPPRM:AS1210 , CAPPRM:CE , CAPPRM:MHLW , CAPPRM:MOM) + MOVOL:400V , (CAPPRM:CE + MOVOL:500V , CAPPRM:MHLW + MOVOL:200V) + COOL:AIR) + FREQ:50HZ , (CAPPRM:ASME , CAPPRM:MHLW) + FREQ:60HZ + MOVOL:460V) + CAPPRE:IEC , ((MOVOL:230V , MOVOL:575V) + COOL:AIR , MOVOL:460V) + CAPPRE:ULCUL + CAPPRM:ASME + FREQ:60HZ) **(11/12/2018 - 11/12/2018)** ((((CAPPRM:AS1210 , CAPPRM:CE , CAPPRM:MHLW , CAPPRM:MOM) + MOVOL:400V , (CAPPRM:CE + MOVOL:500V , CAPPRM:MHLW + MOVOL:200V) + COOL:AIR) + FREQ:50HZ , (CAPPRM:ASME , CAPPRM:MHLW) + COOL:WATER + FREQ:60HZ + MOVOL:460V) + CAPPRE:IEC , ((MOVOL:230V , MOVOL:575V) + COOL:AIR , MOVOL:460V) + CAPPRE:ULCUL + CAPPRM:ASME + FREQ:60HZ)	-
		1	DATA LABEL	**(20/07/2017 - 01/02/2018)** ((((CAPPRM:AS1210 , CAPPRM:CE , CAPPRM:MHLW , CAPPRM:MOM) + MOVOL:400V , CAPPRM:CE + MOVOL:500V , CAPPRM:MHLW + MOVOL:200V) + FREQ:50HZ , (CAPPRM:ASME , CAPPRM:MHLW) + FREQ:60HZ + MOVOL:460V) + CAPPRE:IEC , (MOVOL:230V , MOVOL:460V , MOVOL:575V) + CAPPRE:ULCUL + CAPPRM:ASME + FREQ:60HZ) + COOL:AIR	
	1079 9901 68	1	WARNING LABEL	**(20/07/2017 - 20/08/2018)** ((((CAPPRM:AS1210 , CAPPRM:CE , CAPPRM:MHLW , CAPPRM:MOM) + MOVOL:400V , CAPPRM:CE + MOVOL:500V , CAPPRM:MHLW + MOVOL:200V) + FREQ:50HZ , (CAPPRM:ASME , CAPPRM:MHLW) + FREQ:60HZ + MOVOL:460V) + CAPPRE:IEC , (MOVOL:230V , MOVOL:460V , MOVOL:575V) + CAPPRE:ULCUL + CAPPRM:ASME + FREQ:60HZ) + COOL:AIR **(21/08/2018 - 10/12/2018)** ((((CAPPRM:AS1210 , CAPPRM:CE , CAPPRM:MHLW , CAPPRM:MOM) + MOVOL:400V , (CAPPRM:CE + MOVOL:500V , CAPPRM:MHLW + MOVOL:200V) + COOL:AIR) + FREQ:50HZ , (CAPPRM:ASME , CAPPRM:MHLW) + FREQ:60HZ + MOVOL:460V) + CAPPRE:IEC , ((MOVOL:230V , MOVOL:575V) + COOL:AIR , MOVOL:460V) + CAPPRE:ULCUL + CAPPRM:ASME + FREQ:60HZ) **(11/12/2018 - 11/12/2018)** ((((CAPPRM:AS1210 , CAPPRM:CE , CAPPRM:MHLW , CAPPRM:MOM) + MOVOL:400V , (CAPPRM:CE + MOVOL:500V , CAPPRM:MHLW + MOVOL:200V) + COOL:AIR) + FREQ:50HZ , (CAPPRM:ASME , CAPPRM:MHLW) + COOL:WATER + FREQ:60HZ + MOVOL:460V) + CAPPRE:IEC , ((MOVOL:230V , MOVOL:575V) + COOL:AIR , MOVOL:460V) + CAPPRE:ULCUL + CAPPRM:ASME + FREQ:60HZ)	

Legend:

CAPPRE:IEC - Component approval electrical:IEC
CAPPRE:ULCUL - Component approval electrical:UL/cUL
CAPPRM:AS1210 - Component approval mechanical:AS1210
CAPPRM:ASME - Component approval mechanical:ASME
CAPPRM:CE - Component approval mechanical:CE
CAPPRM:MHLW - Component approval mechanical:MHLW
CAPPRM:MOM - Component approval mechanical:MOM
COOL:AIR - Cooling:Air cooled
COOL:WATER - Cooling:Water cooled
FREQ:50HZ - Frequency:50 Hz
FREQ:60HZ - Frequency:60 Hz
IDRY:Y - Integrated dryer:Yes
MODEL:GA110VP_16 - Model:GA 110VSD+
MOVOL:200V - Supply voltage:200 V
MOVOL:230V - Supply voltage:230 V
MOVOL:400V - Supply voltage:400 V
MOVOL:460V - Supply voltage:460 V
MOVOL:500V - Supply voltage:500 V
MOVOL:575V - Supply voltage:575 V

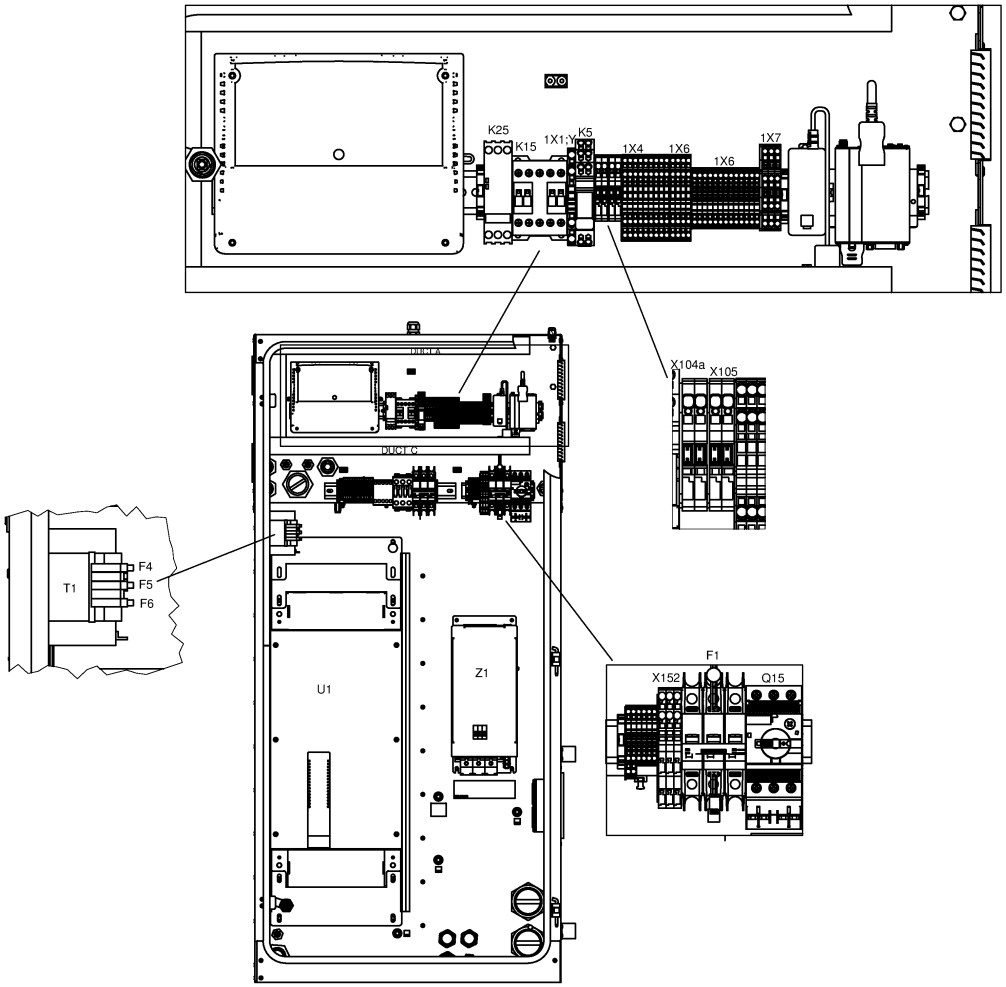
K25
K15
1X1:Y
K5
1X4
1X6
1X6
1X7
X104a
X105
DUCT A
DUCT C
T1
F4
F5
F6
U1
Z1
F1
X152
Q15

21.26 - Cubicle components GA 110 VSD+ - (200V-400V-500V/50Hz, 460V/60Hz - IEC, 230V-460V-575V/60Hz - UL-cUL) - Full-Feature (20/07/2017 - 11/12/2018)

(((MOVOL:200V , MOVOL:400V , MOVOL:500V) + FREQ:50HZ , FREQ:60HZ + MOVOL:460V) + CAPPRE:IEC , (MOVOL:230V , MOVOL:460V , MOVOL:575V) + CAPPRE:ULCUL + FREQ:60HZ) + IDRY:Y + MODEL:GA110VP_16

Ref	Part Number	Qty	Name	Validity	EL
	1900 5350 18	1	INVERTER	**(20/07/2017 - 20/08/2018)** ((((CAPPRM:AS1210 , CAPPRM:CE , CAPPRM:MHLW , CAPPRM:MOM) + MOVOL:400V , CAPPRM:CE + MOVOL:500V , CAPPRM:MHLW + MOVOL:200V) + FREQ:50HZ , (CAPPRM:ASME , CAPPRM:MHLW) + FREQ:60HZ + MOVOL:460V) + CAPPRE:IEC , (MOVOL:230V , MOVOL:460V , MOVOL:575V) + CAPPRE:ULCUL + CAPPRM:ASME + FREQ:60HZ) + COOL:AIR **(21/08/2018 - 10/12/2018)** ((((CAPPRM:AS1210 , CAPPRM:CE , CAPPRM:MHLW , CAPPRM:MOM) + MOVOL:400V , (CAPPRM:CE + MOVOL:500V , CAPPRM:MHLW + MOVOL:200V) + COOL:AIR) + FREQ:50HZ , (CAPPRM:ASME , CAPPRM:MHLW) + FREQ:60HZ + MOVOL:460V) + CAPPRE:IEC , ((MOVOL:230V , MOVOL:575V) + COOL:AIR , MOVOL:460V) + CAPPRE:ULCUL + CAPPRM:ASME + FREQ:60HZ) **(11/12/2018 - 11/12/2018)** ((((CAPPRM:AS1210 , CAPPRM:CE , CAPPRM:MHLW , CAPPRM:MOM) + MOVOL:400V , (CAPPRM:CE + MOVOL:500V , CAPPRM:MHLW + MOVOL:200V) + COOL:AIR) + FREQ:50HZ , (CAPPRM:ASME , CAPPRM:MHLW) + COOL:WATER + FREQ:60HZ + MOVOL:460V) + CAPPRE:IEC , ((MOVOL:230V , MOVOL:575V) + COOL:AIR , MOVOL:460V) + CAPPRE:ULCUL + CAPPRM:ASME + FREQ:60HZ)	U1
	1631 2079 00	1	NANOPERMRING	**(20/07/2017 - 20/08/2018)** ((((CAPPRM:AS1210 , CAPPRM:CE , CAPPRM:MHLW , CAPPRM:MOM) + MOVOL:400V , CAPPRM:CE + MOVOL:500V , CAPPRM:MHLW + MOVOL:200V) + FREQ:50HZ , (CAPPRM:ASME , CAPPRM:MHLW) + FREQ:60HZ + MOVOL:460V) + CAPPRE:IEC , (MOVOL:230V , MOVOL:460V , MOVOL:575V) + CAPPRE:ULCUL + CAPPRM:ASME + FREQ:60HZ) + COOL:AIR **(21/08/2018 - 10/12/2018)** ((((CAPPRM:AS1210 , CAPPRM:CE , CAPPRM:MHLW , CAPPRM:MOM) + MOVOL:400V , (CAPPRM:CE + MOVOL:500V , CAPPRM:MHLW + MOVOL:200V) + COOL:AIR) + FREQ:50HZ , (CAPPRM:ASME , CAPPRM:MHLW) + FREQ:60HZ + MOVOL:460V) + CAPPRE:IEC , ((MOVOL:230V , MOVOL:575V) + COOL:AIR , MOVOL:460V) + CAPPRE:ULCUL + CAPPRM:ASME + FREQ:60HZ) **(11/12/2018 - 11/12/2018)** ((((CAPPRM:AS1210 , CAPPRM:CE , CAPPRM:MHLW , CAPPRM:MOM) + MOVOL:400V , (CAPPRM:CE + MOVOL:500V , CAPPRM:MHLW + MOVOL:200V) + COOL:AIR) + FREQ:50HZ , (CAPPRM:ASME , CAPPRM:MHLW) + COOL:WATER + FREQ:60HZ + MOVOL:460V) + CAPPRE:IEC , ((MOVOL:230V , MOVOL:575V) + COOL:AIR , MOVOL:460V) + CAPPRE:ULCUL + CAPPRM:ASME + FREQ:60HZ)	-

Legend:

CAPPRE:IEC - Component approval electrical:IEC
CAPPRM:ASME - Component approval mechanical:ASME
CAPPRM:MOM - Component approval mechanical:MOM
FREQ:50HZ - Frequency:50 Hz
MODEL:GA110VP_16 - Model:GA 110VSD+
MOVOL:400V - Supply voltage:400 V
MOVOL:575V - Supply voltage:575 V
CAPPRE:ULCUL - Component approval electrical:UL/cUL
CAPPRM:CE - Component approval mechanical:CE
COOL:AIR - Cooling:Air cooled
FREQ:60HZ - Frequency:60 Hz
MOVOL:200V - Supply voltage:200 V
MOVOL:460V - Supply voltage:460 V
CAPPRM:AS1210 - Component approval mechanical:AS1210
CAPPRM:MHLW - Component approval mechanical:MHLW
COOL:WATER - Cooling:Water cooled
IDRY:Y - Integrated dryer:Yes
MOVOL:230V - Supply voltage:230 V
MOVOL:500V - Supply voltage:500 V

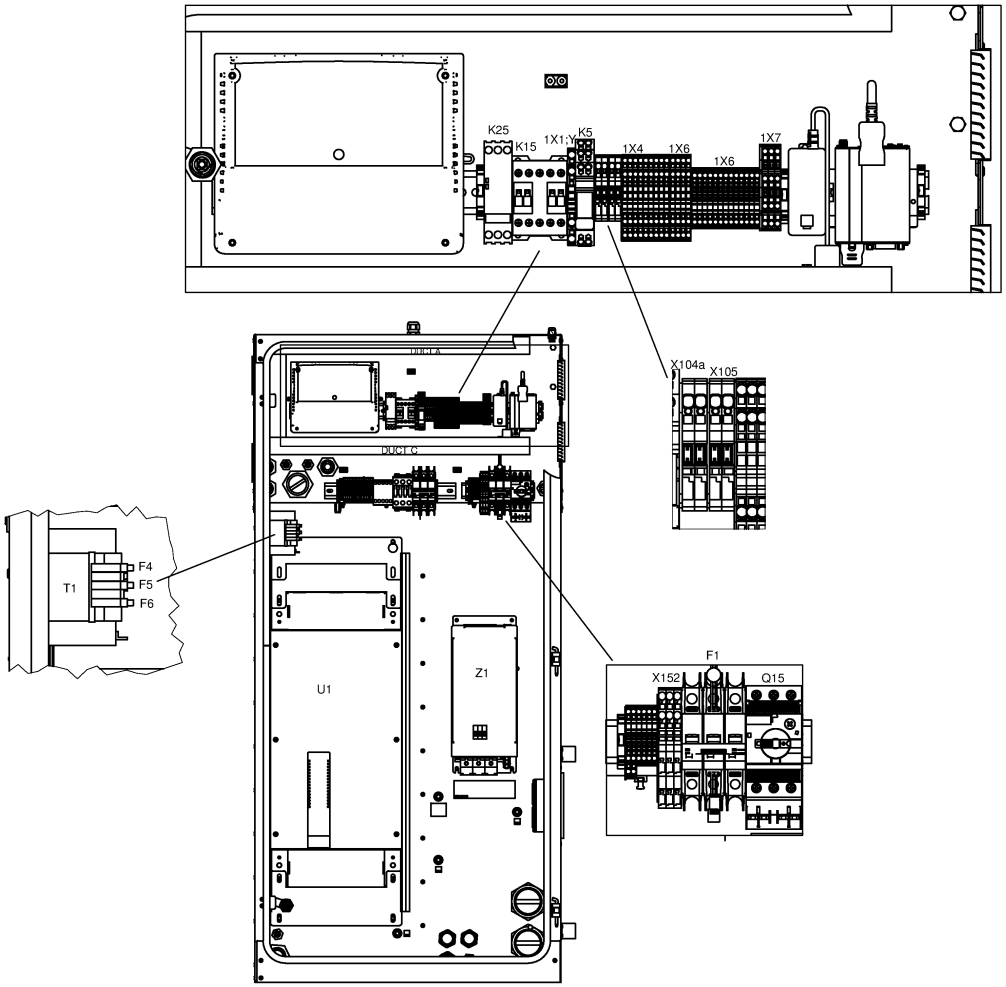
K25
K15
1X1:Y
K5
1X4
1X6
1X6
1X7
DUCT A
DUCT C
X104a
X105
T1
F4
F5
F6
U1
Z1
F1
X152
Q15

21.26 - Cubicle components GA 110 VSD+ - (200V-400V-500V/50Hz, 460V/60Hz - IEC, 230V-460V-575V/60Hz - UL-cUL) - Full-Feature (20/07/2017 - 11/12/2018)

(((MOVOL:200V , MOVOL:400V , MOVOL:500V) + FREQ:50HZ , FREQ:60HZ + MOVOL:460V) + CAPPRE:IEC , (MOVOL:230V , MOVOL:460V , MOVOL:575V) + CAPPRE:ULCUL + FREQ:60HZ) + IDRY:Y + MODEL:GA110VP_16

Ref	Part Number	Qty	Name	Validity	EL
	0697 9811 17	2	PLUG	**(20/07/2017 - 20/08/2018)** ((((CAPPRM:AS1210 , CAPPRM:CE , CAPPRM:MHLW , CAPPRM:MOM) + MOVOL:400V , CAPPRM:CE + MOVOL:500V , CAPPRM:MHLW + MOVOL:200V) + FREQ:50HZ , (CAPPRM:ASME , CAPPRM:MHLW) + FREQ:60HZ + MOVOL:460V) + CAPPRE:IEC , (MOVOL:230V , MOVOL:460V , MOVOL:575V) + CAPPRE:ULCUL + CAPPRM:ASME + FREQ:60HZ) + COOL:AIR **(21/08/2018 - 10/12/2018)** ((((CAPPRM:AS1210 , CAPPRM:CE , CAPPRM:MHLW , CAPPRM:MOM) + MOVOL:400V , (CAPPRM:CE + MOVOL:500V , CAPPRM:MHLW + MOVOL:200V) + COOL:AIR) + FREQ:50HZ , (CAPPRM:ASME , CAPPRM:MHLW) + FREQ:60HZ + MOVOL:460V) + CAPPRE:IEC , ((MOVOL:230V , MOVOL:575V) + COOL:AIR , MOVOL:460V) + CAPPRE:ULCUL + CAPPRM:ASME + FREQ:60HZ) **(11/12/2018 - 11/12/2018)** ((((CAPPRM:AS1210 , CAPPRM:CE , CAPPRM:MHLW , CAPPRM:MOM) + MOVOL:400V , (CAPPRM:CE + MOVOL:500V , CAPPRM:MHLW + MOVOL:200V) + COOL:AIR) + FREQ:50HZ , (CAPPRM:ASME , CAPPRM:MHLW) + COOL:WATER + FREQ:60HZ + MOVOL:460V) + CAPPRE:IEC , ((MOVOL:230V , MOVOL:575V) + COOL:AIR , MOVOL:460V) + CAPPRE:ULCUL + CAPPRM:ASME + FREQ:60HZ)	
	Electrical legend:	Plug for transfo supply			
	0989 3700 48	2	NUT	**(20/07/2017 - 20/08/2018)** ((((CAPPRM:AS1210 , CAPPRM:CE , CAPPRM:MHLW , CAPPRM:MOM) + MOVOL:400V , CAPPRM:CE + MOVOL:500V , CAPPRM:MHLW + MOVOL:200V) + FREQ:50HZ , (CAPPRM:ASME , CAPPRM:MHLW) + FREQ:60HZ + MOVOL:460V) + CAPPRE:IEC , (MOVOL:230V , MOVOL:460V , MOVOL:575V) + CAPPRE:ULCUL + CAPPRM:ASME + FREQ:60HZ) + COOL:AIR **(21/08/2018 - 10/12/2018)** ((((CAPPRM:AS1210 , CAPPRM:CE , CAPPRM:MHLW , CAPPRM:MOM) + MOVOL:400V , (CAPPRM:CE + MOVOL:500V , CAPPRM:MHLW + MOVOL:200V) + COOL:AIR) + FREQ:50HZ , (CAPPRM:ASME , CAPPRM:MHLW) + FREQ:60HZ + MOVOL:460V) + CAPPRE:IEC , ((MOVOL:230V , MOVOL:575V) + COOL:AIR , MOVOL:460V) + CAPPRE:ULCUL + CAPPRM:ASME + FREQ:60HZ) **(11/12/2018 - 11/12/2018)** ((((CAPPRM:AS1210 , CAPPRM:CE , CAPPRM:MHLW , CAPPRM:MOM) + MOVOL:400V , (CAPPRM:CE + MOVOL:500V , CAPPRM:MHLW + MOVOL:200V) + COOL:AIR) + FREQ:50HZ , (CAPPRM:ASME , CAPPRM:MHLW) + COOL:WATER + FREQ:60HZ + MOVOL:460V) + CAPPRE:IEC , ((MOVOL:230V , MOVOL:575V) + COOL:AIR , MOVOL:460V) + CAPPRE:ULCUL + CAPPRM:ASME + FREQ:60HZ)	
	Electrical legend:	Nut for transfo supply			

Legend:

CAPPRE:IEC - Component approval electrical:IEC
CAPPRM:ASME - Component approval mechanical:ASME
CAPPRM:MOM - Component approval mechanical:MOM
FREQ:50HZ - Frequency:50 Hz
MODEL:GA110VP_16 - Model:GA 110VSD+
MOVOL:400V - Supply voltage:400 V
MOVOL:575V - Supply voltage:575 V
CAPPRE:ULCUL - Component approval electrical:UL/cUL
CAPPRM:CE - Component approval mechanical:CE
COOL:AIR - Cooling:Air cooled
FREQ:60HZ - Frequency:60 Hz
MOVOL:200V - Supply voltage:200 V
MOVOL:460V - Supply voltage:460 V
CAPPRM:AS1210 - Component approval mechanical:AS1210
CAPPRM:MHLW - Component approval mechanical:MHLW
COOL:WATER - Cooling:Water cooled
IDRY:Y - Integrated dryer:Yes
MOVOL:230V - Supply voltage:230 V
MOVOL:500V - Supply voltage:500 V

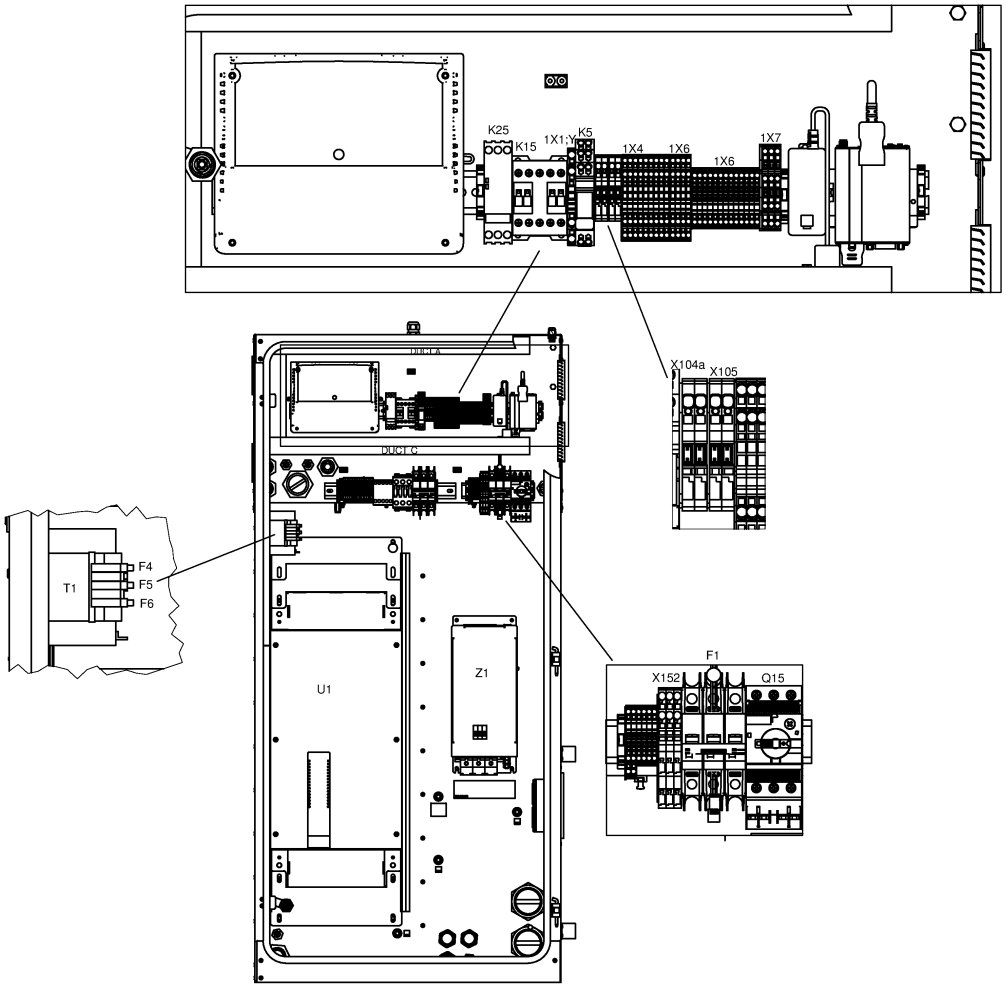
K25
K15
1X1:Y
K5
1X4
1X6
1X6
1X7
X104a
X105
DUCT A
DUCT C
T1
F4
F5
F6
U1
Z1
F1
X152
Q15

21.26 - Cubicle components GA 110 VSD+ - (200V-400V-500V/50Hz, 460V/60Hz - IEC, 230V-460V-575V/60Hz - UL-cUL) - Full-Feature (20/07/2017 - 11/12/2018)

(((MOVOL:200V , MOVOL:400V , MOVOL:500V) + FREQ:50HZ , FREQ:60HZ + MOVOL:460V) + CAPPRE:IEC , (MOVOL:230V , MOVOL:460V , MOVOL:575V) + CAPPRE:ULCUL + FREQ:60HZ) + IDRY:Y + MODEL:GA110VP_16

Ref	Part Number	Qty	Name	Validity	EL
	0698 5140 72	1	CABLE GLAND	**(20/07/2017 - 20/08/2018)** ((((CAPPRM:AS1210 , CAPPRM:CE , CAPPRM:MHLW , CAPPRM:MOM) + MOVOL:400V , CAPPRM:CE + MOVOL:500V , CAPPRM:MHLW + MOVOL:200V) + FREQ:50HZ , (CAPPRM:ASME , CAPPRM:MHLW) + FREQ:60HZ + MOVOL:460V) + CAPPRE:IEC , (MOVOL:230V , MOVOL:460V , MOVOL:575V) + CAPPRE:ULCUL + CAPPRM:ASME + FREQ:60HZ) + COOL:AIR **(21/08/2018 - 10/12/2018)** ((((CAPPRM:AS1210 , CAPPRM:CE , CAPPRM:MHLW , CAPPRM:MOM) + MOVOL:400V , (CAPPRM:CE + MOVOL:500V , CAPPRM:MHLW + MOVOL:200V) + COOL:AIR) + FREQ:50HZ , (CAPPRM:ASME , CAPPRM:MHLW) + FREQ:60HZ + MOVOL:460V) + CAPPRE:IEC , ((MOVOL:230V , MOVOL:575V) + COOL:AIR , MOVOL:460V) + CAPPRE:ULCUL + CAPPRM:ASME + FREQ:60HZ) **(11/12/2018 - 11/12/2018)** ((((CAPPRM:AS1210 , CAPPRM:CE , CAPPRM:MHLW , CAPPRM:MOM) + MOVOL:400V , (CAPPRM:CE + MOVOL:500V , CAPPRM:MHLW + MOVOL:200V) + COOL:AIR) + FREQ:50HZ , (CAPPRM:ASME , CAPPRM:MHLW) + COOL:WATER + FREQ:60HZ + MOVOL:460V) + CAPPRE:IEC , ((MOVOL:230V , MOVOL:575V) + COOL:AIR , MOVOL:460V) + CAPPRE:ULCUL + CAPPRM:ASME + FREQ:60HZ)	Fan
	0698 5140 71	1	CABLE GLAND	**(20/07/2017 - 20/08/2018)** ((((CAPPRM:AS1210 , CAPPRM:CE , CAPPRM:MHLW , CAPPRM:MOM) + MOVOL:400V , CAPPRM:CE + MOVOL:500V , CAPPRM:MHLW + MOVOL:200V) + FREQ:50HZ , (CAPPRM:ASME , CAPPRM:MHLW) + FREQ:60HZ + MOVOL:460V) + CAPPRE:IEC , (MOVOL:230V , MOVOL:460V , MOVOL:575V) + CAPPRE:ULCUL + CAPPRM:ASME + FREQ:60HZ) + COOL:AIR **(21/08/2018 - 10/12/2018)** ((((CAPPRM:AS1210 , CAPPRM:CE , CAPPRM:MHLW , CAPPRM:MOM) + MOVOL:400V , (CAPPRM:CE + MOVOL:500V , CAPPRM:MHLW + MOVOL:200V) + COOL:AIR) + FREQ:50HZ , (CAPPRM:ASME , CAPPRM:MHLW) + FREQ:60HZ + MOVOL:460V) + CAPPRE:IEC , ((MOVOL:230V , MOVOL:575V) + COOL:AIR , MOVOL:460V) + CAPPRE:ULCUL + CAPPRM:ASME + FREQ:60HZ) **(11/12/2018 - 11/12/2018)** ((((CAPPRM:AS1210 , CAPPRM:CE , CAPPRM:MHLW , CAPPRM:MOM) + MOVOL:400V , (CAPPRM:CE + MOVOL:500V , CAPPRM:MHLW + MOVOL:200V) + COOL:AIR) + FREQ:50HZ , (CAPPRM:ASME , CAPPRM:MHLW) + COOL:WATER + FREQ:60HZ + MOVOL:460V) + CAPPRE:IEC , ((MOVOL:230V , MOVOL:575V) + COOL:AIR , MOVOL:460V) + CAPPRE:ULCUL + CAPPRM:ASME + FREQ:60HZ)	

Electrical legend: Ambient sensor

Legend:

CAPPRE:IEC - Component approval electrical:IEC
CAPPRM:ASME - Component approval mechanical:ASME
CAPPRM:MOM - Component approval mechanical:MOM
FREQ:50HZ - Frequency:50 Hz
MODEL:GA110VP_16 - Model:GA 110VSD+
MOVOL:400V - Supply voltage:400 V
MOVOL:575V - Supply voltage:575 V
CAPPRE:ULCUL - Component approval electrical:UL/cUL
CAPPRM:CE - Component approval mechanical:CE
COOL:AIR - Cooling:Air cooled
FREQ:60HZ - Frequency:60 Hz
MOVOL:200V - Supply voltage:200 V
MOVOL:460V - Supply voltage:460 V
CAPPRM:AS1210 - Component approval mechanical:AS1210
CAPPRM:MHLW - Component approval mechanical:MHLW
COOL:WATER - Cooling:Water cooled
IDRY:Y - Integrated dryer:Yes
MOVOL:230V - Supply voltage:230 V
MOVOL:500V - Supply voltage:500 V

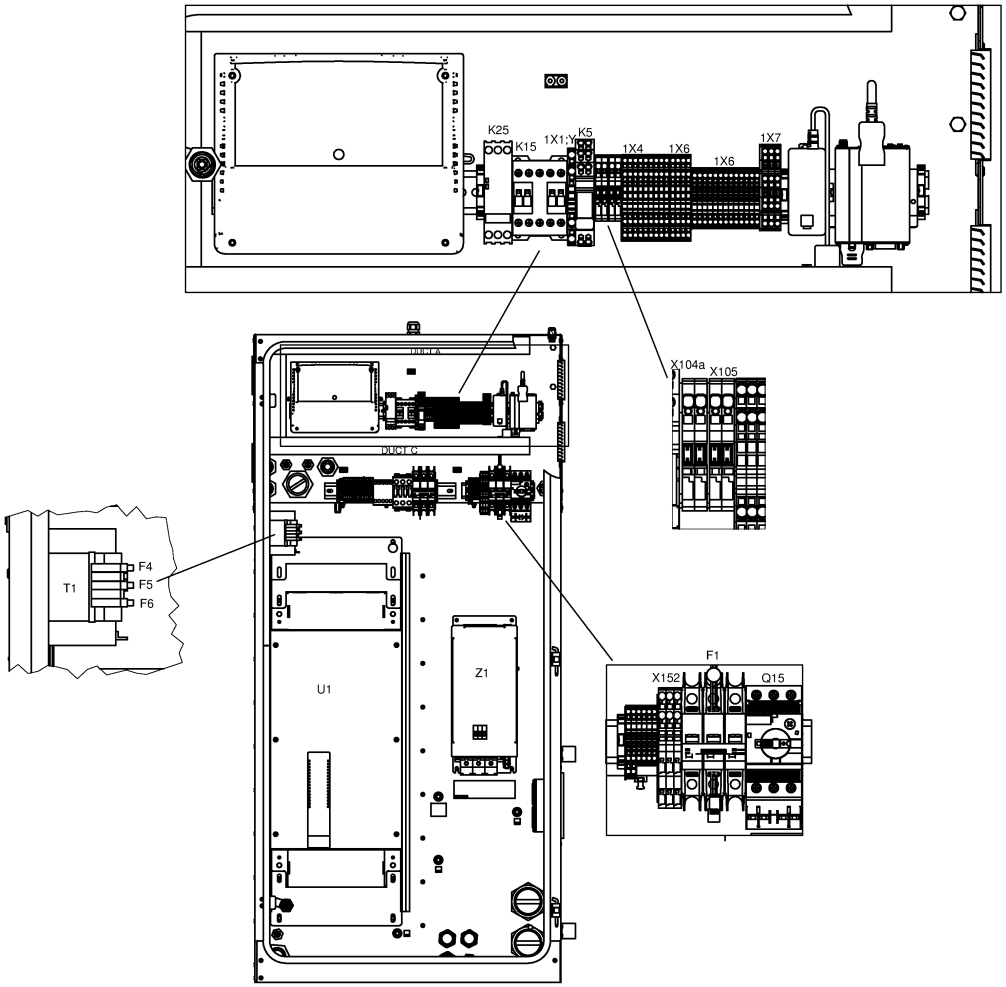
K25
K15
1X1:Y
K5
1X4
1X6
1X6
1X7
X104a
X105
DUCT A
DUCT C
T1
F4
F5
F6
U1
Z1
F1
X152
Q15

21.26 - Cubicle components GA 110 VSD+ - (200V-400V-500V/50Hz, 460V/60Hz - IEC, 230V-460V-575V/60Hz - UL-cUL) - Full-Feature (20/07/2017 - 11/12/2018)

(((MOVOL:200V , MOVOL:400V , MOVOL:500V) + FREQ:50HZ , FREQ:60HZ + MOVOL:460V) + CAPPRE:IEC , (MOVOL:230V , MOVOL:460V , MOVOL:575V) + CAPPRE:ULCUL + FREQ:60HZ) + IDRY:Y + MODEL:GA110VP_16

Ref	Part Number	Qty	Name	Validity	EL
	0697 9809 20	1	LOCKNUT	**(20/07/2017 - 20/08/2018)** ((((CAPPRM:AS1210 , CAPPRM:CE , CAPPRM:MHLW , CAPPRM:MOM) + MOVOL:400V , CAPPRM:CE + MOVOL:500V , CAPPRM:MHLW + MOVOL:200V) + FREQ:50HZ , (CAPPRM:ASME , CAPPRM:MHLW) + FREQ:60HZ + MOVOL:460V) + CAPPRE:IEC , (MOVOL:230V , MOVOL:460V , MOVOL:575V) + CAPPRE:ULCUL + CAPPRM:ASME + FREQ:60HZ) + COOL:AIR **(21/08/2018 - 10/12/2018)** ((((CAPPRM:AS1210 , CAPPRM:CE , CAPPRM:MHLW , CAPPRM:MOM) + MOVOL:400V , (CAPPRM:CE + MOVOL:500V , CAPPRM:MHLW + MOVOL:200V) + COOL:AIR) + FREQ:50HZ , (CAPPRM:ASME , CAPPRM:MHLW) + FREQ:60HZ + MOVOL:460V) + CAPPRE:IEC , ((MOVOL:230V , MOVOL:575V) + COOL:AIR , MOVOL:460V) + CAPPRE:ULCUL + CAPPRM:ASME + FREQ:60HZ) **(11/12/2018 - 11/12/2018)** ((((CAPPRM:AS1210 , CAPPRM:CE , CAPPRM:MHLW , CAPPRM:MOM) + MOVOL:400V , (CAPPRM:CE + MOVOL:500V , CAPPRM:MHLW + MOVOL:200V) + COOL:AIR) + FREQ:50HZ , (CAPPRM:ASME , CAPPRM:MHLW) + COOL:WATER + FREQ:60HZ + MOVOL:460V) + CAPPRE:IEC , ((MOVOL:230V , MOVOL:575V) + COOL:AIR , MOVOL:460V) + CAPPRE:ULCUL + CAPPRM:ASME + FREQ:60HZ)	
	Electrical legend:	Ambient sensor			
	1089 9556 44	1	FAN WITH FILTER	**(20/07/2017 - 20/08/2018)** ((((CAPPRM:AS1210 , CAPPRM:CE , CAPPRM:MHLW , CAPPRM:MOM) + MOVOL:400V , CAPPRM:CE + MOVOL:500V , CAPPRM:MHLW + MOVOL:200V) + FREQ:50HZ , (CAPPRM:ASME , CAPPRM:MHLW) + FREQ:60HZ + MOVOL:460V) + CAPPRE:IEC , (MOVOL:230V , MOVOL:460V , MOVOL:575V) + CAPPRE:ULCUL + CAPPRM:ASME + FREQ:60HZ) + COOL:AIR **(21/08/2018 - 10/12/2018)** ((((CAPPRM:AS1210 , CAPPRM:CE , CAPPRM:MHLW , CAPPRM:MOM) + MOVOL:400V , (CAPPRM:CE + MOVOL:500V , CAPPRM:MHLW + MOVOL:200V) + COOL:AIR) + FREQ:50HZ , (CAPPRM:ASME , CAPPRM:MHLW) + FREQ:60HZ + MOVOL:460V) + CAPPRE:IEC , ((MOVOL:230V , MOVOL:575V) + COOL:AIR , MOVOL:460V) + CAPPRE:ULCUL + CAPPRM:ASME + FREQ:60HZ) **(11/12/2018 - 11/12/2018)** ((((CAPPRM:AS1210 , CAPPRM:CE , CAPPRM:MHLW , CAPPRM:MOM) + MOVOL:400V , (CAPPRM:CE + MOVOL:500V , CAPPRM:MHLW + MOVOL:200V) + COOL:AIR) + FREQ:50HZ , (CAPPRM:ASME , CAPPRM:MHLW) + COOL:WATER + FREQ:60HZ + MOVOL:460V) + CAPPRE:IEC , ((MOVOL:230V , MOVOL:575V) + COOL:AIR , MOVOL:460V) + CAPPRE:ULCUL + CAPPRM:ASME + FREQ:60HZ)	Cubicle fan

Legend:

CAPPRE:IEC - Component approval electrical:IEC
CAPPRE:ULCUL - Component approval electrical:UL/cUL
CAPPRM:AS1210 - Component approval mechanical:AS1210
CAPPRM:ASME - Component approval mechanical:ASME
CAPPRM:CE - Component approval mechanical:CE
CAPPRM:MHLW - Component approval mechanical:MHLW
CAPPRM:MOM - Component approval mechanical:MOM
COOL:AIR - Cooling:Air cooled
COOL:WATER - Cooling:Water cooled
FREQ:50HZ - Frequency:50 Hz
FREQ:60HZ - Frequency:60 Hz
IDRY:Y - Integrated dryer:Yes
MODEL:GA110VP_16 - Model:GA 110VSD+
MOVOL:200V - Supply voltage:200 V
MOVOL:230V - Supply voltage:230 V
MOVOL:400V - Supply voltage:400 V
MOVOL:460V - Supply voltage:460 V
MOVOL:500V - Supply voltage:500 V
MOVOL:575V - Supply voltage:575 V

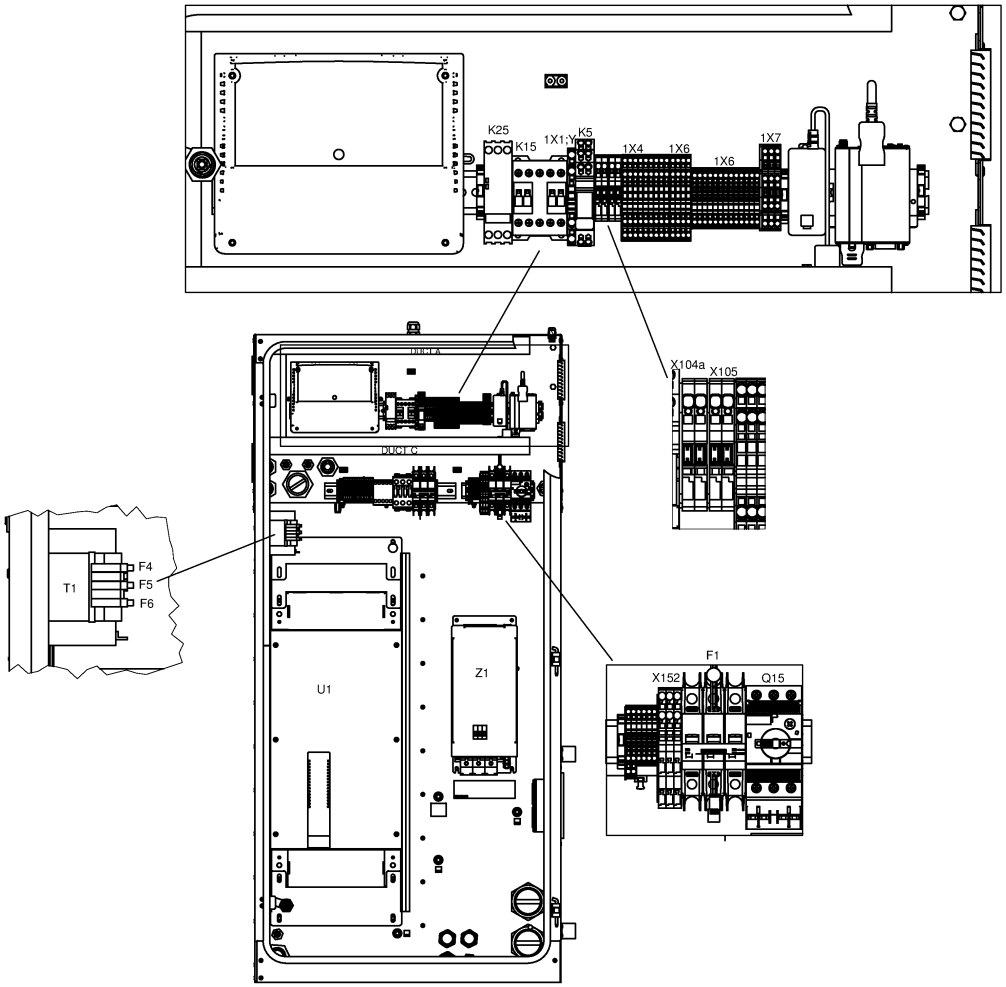
K25
K15
1X1:Y
K5
1X4
1X6
1X6
1X7
X104a
X105
DUCT A
DUCT C
T1
F4
F5
F6
U1
Z1
F1
X152
Q15

21.26 - Cubicle components GA 110 VSD+ - (200V-400V-500V/50Hz, 460V/60Hz - IEC, 230V-460V-575V/60Hz - UL-cUL) - Full-Feature (20/07/2017 - 11/12/2018)

(((MOVOL:200V , MOVOL:400V , MOVOL:500V) + FREQ:50HZ , FREQ:60HZ + MOVOL:460V) + CAPPRE:IEC , (MOVOL:230V , MOVOL:460V , MOVOL:575V) + CAPPRE:ULCUL + FREQ:60HZ) + IDRY:Y + MODEL:GA110VP_16

Ref	Part Number	Qty	Name	Validity	EL
		4	AIR INLET W/O FILTER	**(20/07/2017 - 20/08/2018)** ((((CAPPRM:AS1210 , CAPPRM:CE , CAPPRM:MHLW , CAPPRM:MOM) + MOVOL:400V , CAPPRM:CE + MOVOL:500V , CAPPRM:MHLW + MOVOL:200V) + FREQ:50HZ , (CAPPRM:ASME , CAPPRM:MHLW) + FREQ:60HZ + MOVOL:460V) + CAPPRE:IEC , (MOVOL:230V , MOVOL:460V , MOVOL:575V) + CAPPRE:ULCUL + CAPPRM:ASME + FREQ:60HZ) + COOL:AIR **(21/08/2018 - 10/12/2018)** ((((CAPPRM:AS1210 , CAPPRM:CE , CAPPRM:MHLW , CAPPRM:MOM) + MOVOL:400V , (CAPPRM:CE + MOVOL:500V , CAPPRM:MHLW + MOVOL:200V) + COOL:AIR) + FREQ:50HZ , (CAPPRM:ASME , CAPPRM:MHLW) + FREQ:60HZ + MOVOL:460V) + CAPPRE:IEC , ((MOVOL:230V , MOVOL:575V) + COOL:AIR , MOVOL:460V) + CAPPRE:ULCUL + CAPPRM:ASME + FREQ:60HZ) **(11/12/2018 - 11/12/2018)** ((((CAPPRM:AS1210 , CAPPRM:CE , CAPPRM:MHLW , CAPPRM:MOM) + MOVOL:400V , (CAPPRM:CE + MOVOL:500V , CAPPRM:MHLW + MOVOL:200V) + COOL:AIR) + FREQ:50HZ , (CAPPRM:ASME , CAPPRM:MHLW) + COOL:WATER + FREQ:60HZ + MOVOL:460V) + CAPPRE:IEC , ((MOVOL:230V , MOVOL:575V) + COOL:AIR , MOVOL:460V) + CAPPRE:ULCUL + CAPPRM:ASME + FREQ:60HZ)	-
	Service kits:	2901 9901 02 - PREVENTIVE MAINTENANCE KIT - GA 90 VSD+, GA 110 VSD+ 2901 9900 96 - AIR FILTER KIT - GA 90 VSD+, GA 110 VSD+			
	1088 0032 09	1	CONNECTOR	**(20/07/2017 - 20/08/2018)** ((((CAPPRM:AS1210 , CAPPRM:CE , CAPPRM:MHLW , CAPPRM:MOM) + MOVOL:400V , CAPPRM:CE + MOVOL:500V , CAPPRM:MHLW + MOVOL:200V) + FREQ:50HZ , (CAPPRM:ASME , CAPPRM:MHLW) + FREQ:60HZ + MOVOL:460V) + CAPPRE:IEC , (MOVOL:230V , MOVOL:460V , MOVOL:575V) + CAPPRE:ULCUL + CAPPRM:ASME + FREQ:60HZ) + COOL:AIR **(21/08/2018 - 10/12/2018)** ((((CAPPRM:AS1210 , CAPPRM:CE , CAPPRM:MHLW , CAPPRM:MOM) + MOVOL:400V , (CAPPRM:CE + MOVOL:500V , CAPPRM:MHLW + MOVOL:200V) + COOL:AIR) + FREQ:50HZ , (CAPPRM:ASME , CAPPRM:MHLW) + FREQ:60HZ + MOVOL:460V) + CAPPRE:IEC , ((MOVOL:230V , MOVOL:575V) + COOL:AIR , MOVOL:460V) + CAPPRE:ULCUL + CAPPRM:ASME + FREQ:60HZ) **(11/12/2018 - 11/12/2018)** ((((CAPPRM:AS1210 , CAPPRM:CE , CAPPRM:MHLW , CAPPRM:MOM) + MOVOL:400V , (CAPPRM:CE + MOVOL:500V , CAPPRM:MHLW + MOVOL:200V) + COOL:AIR) + FREQ:50HZ , (CAPPRM:ASME , CAPPRM:MHLW) + COOL:WATER + FREQ:60HZ + MOVOL:460V) + CAPPRE:IEC , ((MOVOL:230V , MOVOL:575V) + COOL:AIR , MOVOL:460V) + CAPPRE:ULCUL + CAPPRM:ASME + FREQ:60HZ)	X3

Legend:

CAPPRE:IEC - Component approval electrical:IEC
CAPPRM:ASME - Component approval mechanical:ASME
CAPPRM:MOM - Component approval mechanical:MOM
FREQ:50HZ - Frequency:50 Hz
MODEL:GA110VP_16 - Model:GA 110VSD+
MOVOL:400V - Supply voltage:400 V
MOVOL:575V - Supply voltage:575 V
CAPPRE:ULCUL - Component approval electrical:UL/cUL
CAPPRM:CE - Component approval mechanical:CE
COOL:AIR - Cooling:Air cooled
FREQ:60HZ - Frequency:60 Hz
MOVOL:200V - Supply voltage:200 V
MOVOL:460V - Supply voltage:460 V
CAPPRM:AS1210 - Component approval mechanical:AS1210
CAPPRM:MHLW - Component approval mechanical:MHLW
COOL:WATER - Cooling:Water cooled
IDRY:Y - Integrated dryer:Yes
MOVOL:230V - Supply voltage:230 V
MOVOL:500V - Supply voltage:500 V

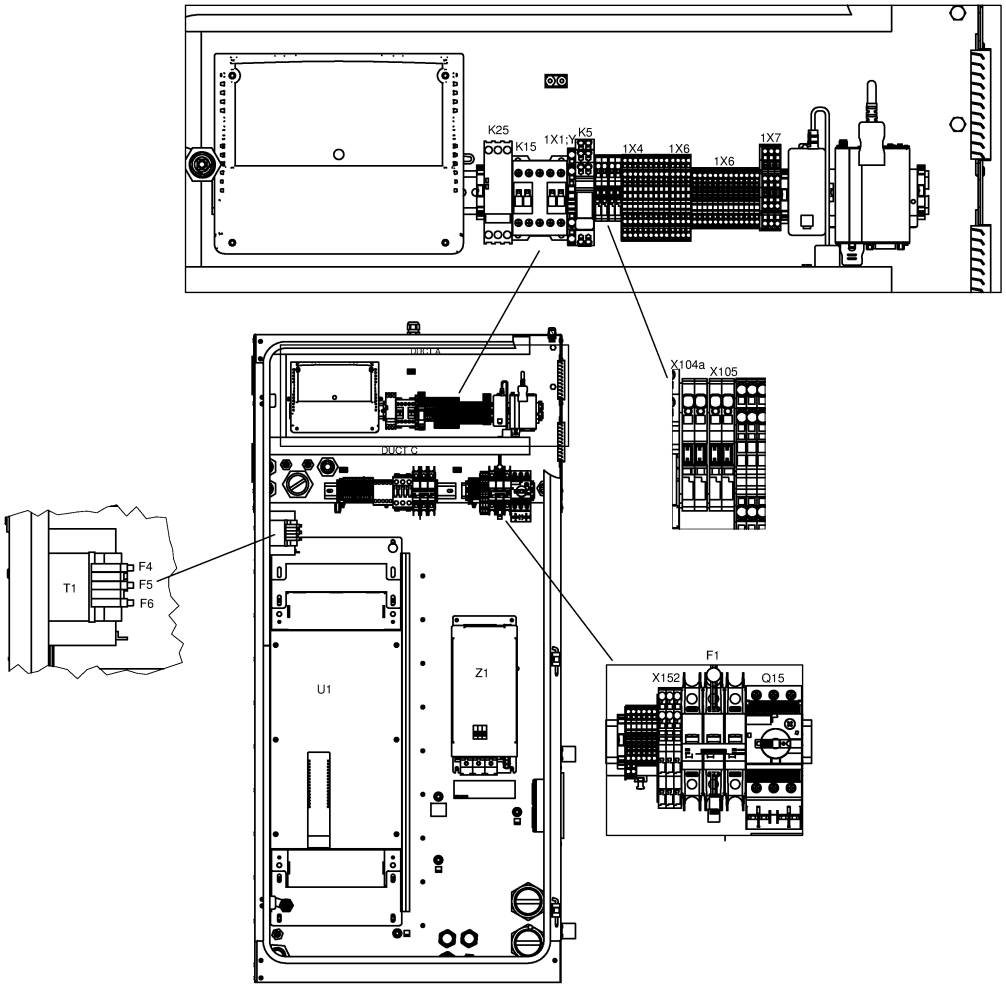
K25
K15
1X1:Y
K5
1X4
1X6
1X6
1X7
X104a
X105
DUCT A
DUCT C
T1
F4
F5
F6
U1
Z1
F1
X152
Q15

21.26 - Cubicle components GA 110 VSD+ - (200V-400V-500V/50Hz, 460V/60Hz - IEC, 230V-460V-575V/60Hz - UL-cUL) - Full-Feature (20/07/2017 - 11/12/2018)

(((MOVOL:200V , MOVOL:400V , MOVOL:500V) + FREQ:50HZ , FREQ:60HZ + MOVOL:460V) + CAPPRE:IEC , (MOVOL:230V , MOVOL:460V , MOVOL:575V) + CAPPRE:ULCUL + FREQ:60HZ) + IDRY:Y + MODEL:GA110VP_16

Ref	Part Number	Qty	Name	Validity	EL
	1089 9572 04	1	LINE FILTER	**(20/07/2017 - 20/08/2018)** ((((CAPPRM:AS1210 , CAPPRM:CE , CAPPRM:MHLW , CAPPRM:MOM) + MOVOL:400V , CAPPRM:CE + MOVOL:500V , CAPPRM:MHLW + MOVOL:200V) + FREQ:50HZ , (CAPPRM:ASME , CAPPRM:MHLW) + FREQ:60HZ + MOVOL:460V) + CAPPRE:IEC , (MOVOL:230V , MOVOL:460V , MOVOL:575V) + CAPPRE:ULCUL + CAPPRM:ASME + FREQ:60HZ) + COOL:AIR **(21/08/2018 - 10/12/2018)** ((((CAPPRM:AS1210 , CAPPRM:CE , CAPPRM:MHLW , CAPPRM:MOM) + MOVOL:400V , (CAPPRM:CE + MOVOL:500V , CAPPRM:MHLW + MOVOL:200V) + COOL:AIR) + FREQ:50HZ , (CAPPRM:ASME , CAPPRM:MHLW) + FREQ:60HZ + MOVOL:460V) + CAPPRE:IEC , ((MOVOL:230V , MOVOL:575V) + COOL:AIR , MOVOL:460V) + CAPPRE:ULCUL + CAPPRM:ASME + FREQ:60HZ) **(11/12/2018 - 11/12/2018)** ((((CAPPRM:AS1210 , CAPPRM:CE , CAPPRM:MHLW , CAPPRM:MOM) + MOVOL:400V , (CAPPRM:CE + MOVOL:500V , CAPPRM:MHLW + MOVOL:200V) + COOL:AIR) + FREQ:50HZ , (CAPPRM:ASME , CAPPRM:MHLW) + COOL:WATER + FREQ:60HZ + MOVOL:460V) + CAPPRE:IEC , ((MOVOL:230V , MOVOL:575V) + COOL:AIR , MOVOL:460V) + CAPPRE:ULCUL + CAPPRM:ASME + FREQ:60HZ)	Z1 for 110kw
	Electrical legend:	Z1 for 110kw			
	1089 9562 04	1	STRAP	**(20/07/2017 - 20/08/2018)** ((((CAPPRM:AS1210 , CAPPRM:CE , CAPPRM:MHLW , CAPPRM:MOM) + MOVOL:400V , CAPPRM:CE + MOVOL:500V , CAPPRM:MHLW + MOVOL:200V) + FREQ:50HZ , (CAPPRM:ASME , CAPPRM:MHLW) + FREQ:60HZ + MOVOL:460V) + CAPPRE:IEC , (MOVOL:230V , MOVOL:460V , MOVOL:575V) + CAPPRE:ULCUL + CAPPRM:ASME + FREQ:60HZ) + COOL:AIR **(21/08/2018 - 10/12/2018)** ((((CAPPRM:AS1210 , CAPPRM:CE , CAPPRM:MHLW , CAPPRM:MOM) + MOVOL:400V , (CAPPRM:CE + MOVOL:500V , CAPPRM:MHLW + MOVOL:200V) + COOL:AIR) + FREQ:50HZ , (CAPPRM:ASME , CAPPRM:MHLW) + FREQ:60HZ + MOVOL:460V) + CAPPRE:IEC , ((MOVOL:230V , MOVOL:575V) + COOL:AIR , MOVOL:460V) + CAPPRE:ULCUL + CAPPRM:ASME + FREQ:60HZ) **(11/12/2018 - 11/12/2018)** ((((CAPPRM:AS1210 , CAPPRM:CE , CAPPRM:MHLW , CAPPRM:MOM) + MOVOL:400V , (CAPPRM:CE + MOVOL:500V , CAPPRM:MHLW + MOVOL:200V) + COOL:AIR) + FREQ:50HZ , (CAPPRM:ASME , CAPPRM:MHLW) + COOL:WATER + FREQ:60HZ + MOVOL:460V) + CAPPRE:IEC , ((MOVOL:230V , MOVOL:575V) + COOL:AIR , MOVOL:460V) + CAPPRE:ULCUL + CAPPRM:ASME + FREQ:60HZ)	HF-screen

Legend:

CAPPRE:IEC - Component approval electrical:IEC
CAPPRE:ULCUL - Component approval electrical:UL/cUL
CAPPRM:AS1210 - Component approval mechanical:AS1210
CAPPRM:ASME - Component approval mechanical:ASME
CAPPRM:CE - Component approval mechanical:CE
CAPPRM:MHLW - Component approval mechanical:MHLW
CAPPRM:MOM - Component approval mechanical:MOM
COOL:AIR - Cooling:Air cooled
COOL:WATER - Cooling:Water cooled
FREQ:50HZ - Frequency:50 Hz
FREQ:60HZ - Frequency:60 Hz
IDRY:Y - Integrated dryer:Yes
MODEL:GA110VP_16 - Model:GA 110VSD+
MOVOL:200V - Supply voltage:200 V
MOVOL:230V - Supply voltage:230 V
MOVOL:400V - Supply voltage:400 V
MOVOL:460V - Supply voltage:460 V
MOVOL:500V - Supply voltage:500 V
MOVOL:575V - Supply voltage:575 V

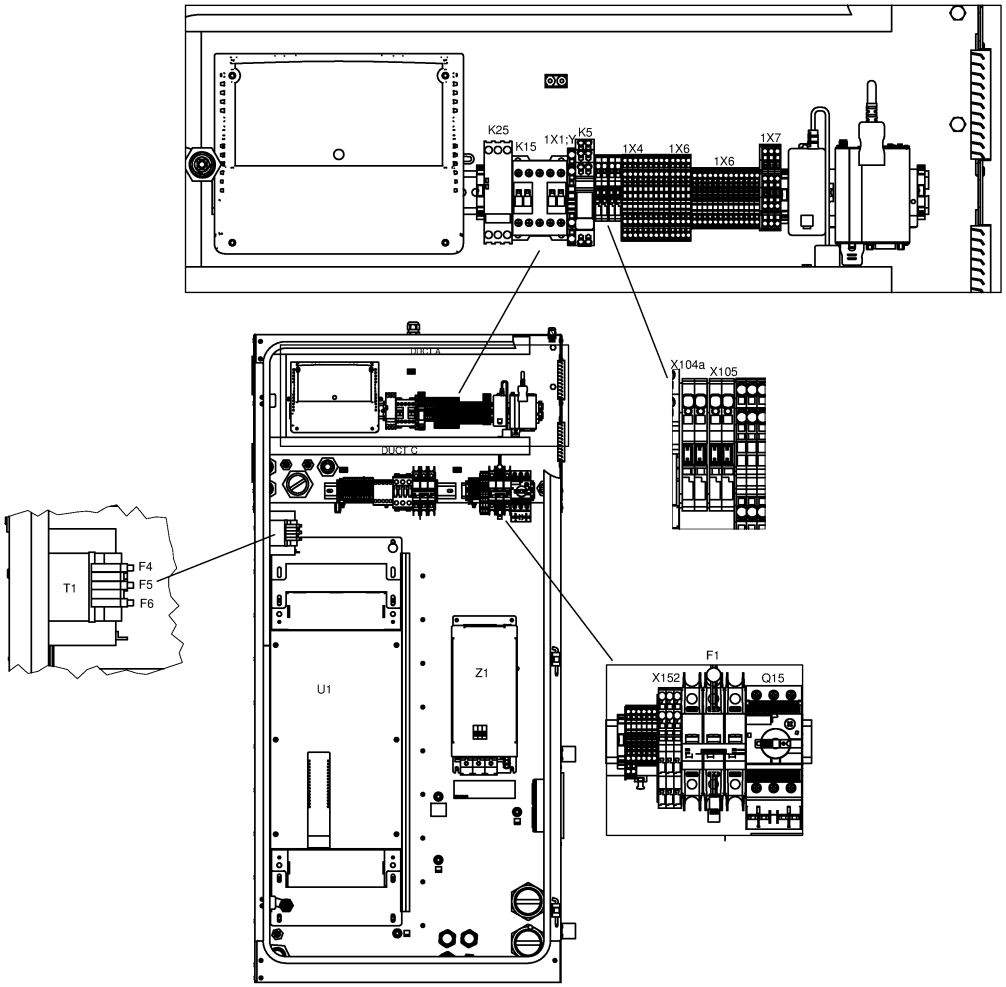
K25
K15
1X1:Y
K5
1X4
1X6
1X6
1X7
X104a
X105
DUCT A
DUCT C
T1
F4
F5
F6
U1
Z1
F1
X152
Q15

21.26 - Cubicle components GA 110 VSD+ - (200V-400V-500V/50Hz, 460V/60Hz - IEC, 230V-460V-575V/60Hz - UL-cUL) - Full-Feature (20/07/2017 - 11/12/2018)

(((MOVOL:200V , MOVOL:400V , MOVOL:500V) + FREQ:50HZ , FREQ:60HZ + MOVOL:460V) + CAPPRE:IEC , (MOVOL:230V , MOVOL:460V , MOVOL:575V) + CAPPRE:ULCUL + FREQ:60HZ) + IDRY:Y + MODEL:GA110VP_16

Ref	Part Number	Qty	Name	Validity	EL
	1089 9514 56	1	TRANSFORMER	**(20/07/2017 - 20/08/2018)** ((((CAPPRM:AS1210 , CAPPRM:CE , CAPPRM:MHLW , CAPPRM:MOM) + MOVOL:400V , CAPPRM:CE + MOVOL:500V , CAPPRM:MHLW + MOVOL:200V) + FREQ:50HZ , (CAPPRM:ASME , CAPPRM:MHLW) + FREQ:60HZ + MOVOL:460V) + CAPPRE:IEC , (MOVOL:230V , MOVOL:460V , MOVOL:575V) + CAPPRE:ULCUL + CAPPRM:ASME + FREQ:60HZ) + COOL:AIR **(21/08/2018 - 10/12/2018)** ((((CAPPRM:AS1210 , CAPPRM:CE , CAPPRM:MHLW , CAPPRM:MOM) + MOVOL:400V , (CAPPRM:CE + MOVOL:500V , CAPPRM:MHLW + MOVOL:200V) + COOL:AIR) + FREQ:50HZ , (CAPPRM:ASME , CAPPRM:MHLW) + FREQ:60HZ + MOVOL:460V) + CAPPRE:IEC , ((MOVOL:230V , MOVOL:575V) + COOL:AIR , MOVOL:460V) + CAPPRE:ULCUL + CAPPRM:ASME + FREQ:60HZ) **(11/12/2018 - 11/12/2018)** ((((CAPPRM:AS1210 , CAPPRM:CE , CAPPRM:MHLW , CAPPRM:MOM) + MOVOL:400V , (CAPPRM:CE + MOVOL:500V , CAPPRM:MHLW + MOVOL:200V) + COOL:AIR) + FREQ:50HZ , (CAPPRM:ASME , CAPPRM:MHLW) + COOL:WATER + FREQ:60HZ + MOVOL:460V) + CAPPRE:IEC , ((MOVOL:230V , MOVOL:575V) + COOL:AIR , MOVOL:460V) + CAPPRE:ULCUL + CAPPRM:ASME + FREQ:60HZ)	T1
	1089 9522 26	1	CIRCUIT BREAKER	**(20/07/2017 - 20/08/2018)** ((((CAPPRM:AS1210 , CAPPRM:CE , CAPPRM:MHLW , CAPPRM:MOM) + MOVOL:400V , CAPPRM:CE + MOVOL:500V , CAPPRM:MHLW + MOVOL:200V) + FREQ:50HZ , (CAPPRM:ASME , CAPPRM:MHLW) + FREQ:60HZ + MOVOL:460V) + CAPPRE:IEC , (MOVOL:230V , MOVOL:460V , MOVOL:575V) + CAPPRE:ULCUL + CAPPRM:ASME + FREQ:60HZ) + COOL:AIR **(21/08/2018 - 10/12/2018)** ((((CAPPRM:AS1210 , CAPPRM:CE , CAPPRM:MHLW , CAPPRM:MOM) + MOVOL:400V , (CAPPRM:CE + MOVOL:500V , CAPPRM:MHLW + MOVOL:200V) + COOL:AIR) + FREQ:50HZ , (CAPPRM:ASME , CAPPRM:MHLW) + FREQ:60HZ + MOVOL:460V) + CAPPRE:IEC , ((MOVOL:230V , MOVOL:575V) + COOL:AIR , MOVOL:460V) + CAPPRE:ULCUL + CAPPRM:ASME + FREQ:60HZ) **(11/12/2018 - 11/12/2018)** ((((CAPPRM:AS1210 , CAPPRM:CE , CAPPRM:MHLW , CAPPRM:MOM) + MOVOL:400V , (CAPPRM:CE + MOVOL:500V , CAPPRM:MHLW + MOVOL:200V) + COOL:AIR) + FREQ:50HZ , (CAPPRM:ASME , CAPPRM:MHLW) + COOL:WATER + FREQ:60HZ + MOVOL:460V) + CAPPRE:IEC , ((MOVOL:230V , MOVOL:575V) + COOL:AIR , MOVOL:460V) + CAPPRE:ULCUL + CAPPRM:ASME + FREQ:60HZ)	F1

Legend:

CAPPRE:IEC - Component approval electrical:IEC
CAPPRE:ULCUL - Component approval electrical:UL/cUL
CAPPRM:AS1210 - Component approval mechanical:AS1210
CAPPRM:ASME - Component approval mechanical:ASME
CAPPRM:CE - Component approval mechanical:CE
CAPPRM:MHLW - Component approval mechanical:MHLW
CAPPRM:MOM - Component approval mechanical:MOM
COOL:AIR - Cooling:Air cooled
COOL:WATER - Cooling:Water cooled
FREQ:50HZ - Frequency:50 Hz
FREQ:60HZ - Frequency:60 Hz
IDRY:Y - Integrated dryer:Yes
MODEL:GA110VP_16 - Model:GA 110VSD+
MOVOL:200V - Supply voltage:200 V
MOVOL:230V - Supply voltage:230 V
MOVOL:400V - Supply voltage:400 V
MOVOL:460V - Supply voltage:460 V
MOVOL:500V - Supply voltage:500 V
MOVOL:575V - Supply voltage:575 V

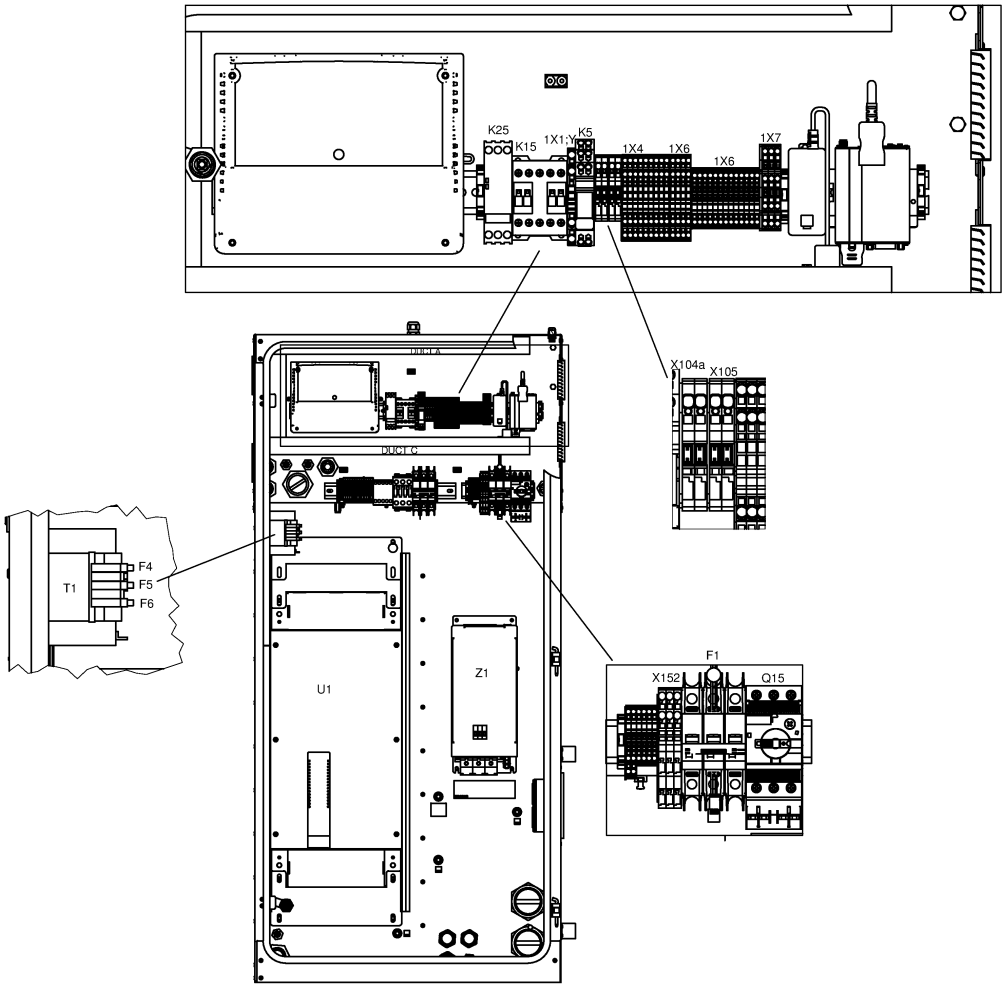
K25
K15
1X1:Y
K5
1X4
1X6
1X6
1X7
X104a
X105
DUCT A
DUCT C
T1
F4
F5
F6
U1
Z1
F1
X152
Q15

21.26 - Cubicle components GA 110 VSD+ - (200V-400V-500V/50Hz, 460V/60Hz - IEC, 230V-460V-575V/60Hz - UL-cUL) - Full-Feature (20/07/2017 - 11/12/2018)

(((MOVOL:200V , MOVOL:400V , MOVOL:500V) + FREQ:50HZ , FREQ:60HZ + MOVOL:460V) + CAPPRE:IEC , (MOVOL:230V , MOVOL:460V , MOVOL:575V) + CAPPRE:ULCUL + FREQ:60HZ) + IDRY:Y + MODEL:GA110VP_16

Ref	Part Number	Qty	Name	Validity	EL
	1089 9513 41	1	PUSH BUTTON	**(20/07/2017 - 20/08/2018)** ((((CAPPRM:AS1210 , CAPPRM:CE , CAPPRM:MHLW , CAPPRM:MOM) + MOVOL:400V , CAPPRM:CE + MOVOL:500V , CAPPRM:MHLW + MOVOL:200V) + FREQ:50HZ , (CAPPRM:ASME , CAPPRM:MHLW) + FREQ:60HZ + MOVOL:460V) + CAPPRE:IEC , (MOVOL:230V , MOVOL:460V , MOVOL:575V) + CAPPRE:ULCUL + CAPPRM:ASME + FREQ:60HZ) + COOL:AIR **(21/08/2018 - 10/12/2018)** ((((CAPPRM:AS1210 , CAPPRM:CE , CAPPRM:MHLW , CAPPRM:MOM) + MOVOL:400V , (CAPPRM:CE + MOVOL:500V , CAPPRM:MHLW + MOVOL:200V) + COOL:AIR) + FREQ:50HZ , (CAPPRM:ASME , CAPPRM:MHLW) + FREQ:60HZ + MOVOL:460V) + CAPPRE:IEC , ((MOVOL:230V , MOVOL:575V) + COOL:AIR , MOVOL:460V) + CAPPRE:ULCUL + CAPPRM:ASME + FREQ:60HZ) **(11/12/2018 - 11/12/2018)** ((((CAPPRM:AS1210 , CAPPRM:CE , CAPPRM:MHLW , CAPPRM:MOM) + MOVOL:400V , (CAPPRM:CE + MOVOL:500V , CAPPRM:MHLW + MOVOL:200V) + COOL:AIR) + FREQ:50HZ , (CAPPRM:ASME , CAPPRM:MHLW) + COOL:WATER + FREQ:60HZ + MOVOL:460V) + CAPPRE:IEC , ((MOVOL:230V , MOVOL:575V) + COOL:AIR , MOVOL:460V) + CAPPRE:ULCUL + CAPPRM:ASME + FREQ:60HZ)	S3
	1089 9513 28	1	HOLDER	**(20/07/2017 - 20/08/2018)** ((((CAPPRM:AS1210 , CAPPRM:CE , CAPPRM:MHLW , CAPPRM:MOM) + MOVOL:400V , CAPPRM:CE + MOVOL:500V , CAPPRM:MHLW + MOVOL:200V) + FREQ:50HZ , (CAPPRM:ASME , CAPPRM:MHLW) + FREQ:60HZ + MOVOL:460V) + CAPPRE:IEC , (MOVOL:230V , MOVOL:460V , MOVOL:575V) + CAPPRE:ULCUL + CAPPRM:ASME + FREQ:60HZ) + COOL:AIR **(21/08/2018 - 10/12/2018)** ((((CAPPRM:AS1210 , CAPPRM:CE , CAPPRM:MHLW , CAPPRM:MOM) + MOVOL:400V , (CAPPRM:CE + MOVOL:500V , CAPPRM:MHLW + MOVOL:200V) + COOL:AIR) + FREQ:50HZ , (CAPPRM:ASME , CAPPRM:MHLW) + FREQ:60HZ + MOVOL:460V) + CAPPRE:IEC , ((MOVOL:230V , MOVOL:575V) + COOL:AIR , MOVOL:460V) + CAPPRE:ULCUL + CAPPRM:ASME + FREQ:60HZ) **(11/12/2018 - 11/12/2018)** ((((CAPPRM:AS1210 , CAPPRM:CE , CAPPRM:MHLW , CAPPRM:MOM) + MOVOL:400V , (CAPPRM:CE + MOVOL:500V , CAPPRM:MHLW + MOVOL:200V) + COOL:AIR) + FREQ:50HZ , (CAPPRM:ASME , CAPPRM:MHLW) + COOL:WATER + FREQ:60HZ + MOVOL:460V) + CAPPRE:IEC , ((MOVOL:230V , MOVOL:575V) + COOL:AIR , MOVOL:460V) + CAPPRE:ULCUL + CAPPRM:ASME + FREQ:60HZ)	S3

Legend:

CAPPRE:IEC - Component approval electrical:IEC
CAPPRM:ASME - Component approval mechanical:ASME
CAPPRM:MOM - Component approval mechanical:MOM
FREQ:50HZ - Frequency:50 Hz
MODEL:GA110VP_16 - Model:GA 110VSD+
MOVOL:400V - Supply voltage:400 V
MOVOL:575V - Supply voltage:575 V
CAPPRE:ULCUL - Component approval electrical:UL/cUL
CAPPRM:CE - Component approval mechanical:CE
COOL:AIR - Cooling:Air cooled
FREQ:60HZ - Frequency:60 Hz
MOVOL:200V - Supply voltage:200 V
MOVOL:460V - Supply voltage:460 V
CAPPRM:AS1210 - Component approval mechanical:AS1210
CAPPRM:MHLW - Component approval mechanical:MHLW
COOL:WATER - Cooling:Water cooled
IDRY:Y - Integrated dryer:Yes
MOVOL:230V - Supply voltage:230 V
MOVOL:500V - Supply voltage:500 V

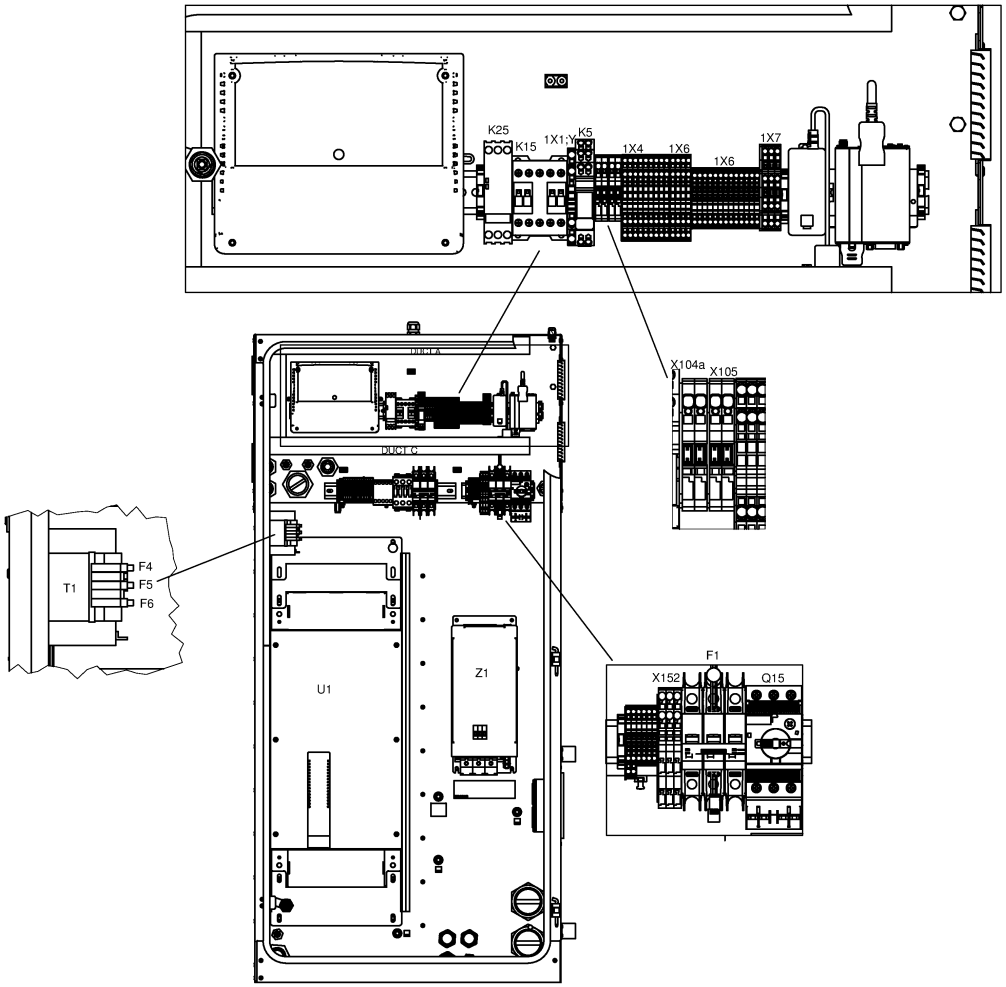
K25
K15
1X1:Y
K5
1X4
1X6
1X6
1X7
X104a
X105
DUCT A
DUCT C
T1
F4
F5
F6
U1
Z1
F1
X152
Q15

21.26 - Cubicle components GA 110 VSD+ - (200V-400V-500V/50Hz, 460V/60Hz - IEC, 230V-460V-575V/60Hz - UL-cUL) - Full-Feature (20/07/2017 - 11/12/2018)

(((MOVOL:200V , MOVOL:400V , MOVOL:500V) + FREQ:50HZ , FREQ:60HZ + MOVOL:460V) + CAPPRE:IEC , (MOVOL:230V , MOVOL:460V , MOVOL:575V) + CAPPRE:ULCUL + FREQ:60HZ) + IDRY:Y + MODEL:GA110VP_16

Ref	Part Number	Qty	Name	Validity	EL
	~~1089 9513 30~~	4	CONTACTOR	**(20/07/2017 - 20/08/2018)** ((((CAPPRM:AS1210 , CAPPRM:CE , CAPPRM:MHLW , CAPPRM:MOM) + MOVOL:400V , CAPPRM:CE + MOVOL:500V , CAPPRM:MHLW + MOVOL:200V) + FREQ:50HZ , (CAPPRM:ASME , CAPPRM:MHLW) + FREQ:60HZ + MOVOL:460V) + CAPPRE:IEC , (MOVOL:230V , MOVOL:460V , MOVOL:575V) + CAPPRE:ULCUL + CAPPRM:ASME + FREQ:60HZ) + COOL:AIR **(21/08/2018 - 10/12/2018)** ((((CAPPRM:AS1210 , CAPPRM:CE , CAPPRM:MHLW , CAPPRM:MOM) + MOVOL:400V , (CAPPRM:CE + MOVOL:500V , CAPPRM:MHLW + MOVOL:200V) + COOL:AIR) + FREQ:50HZ , (CAPPRM:ASME , CAPPRM:MHLW) + FREQ:60HZ + MOVOL:460V) + CAPPRE:IEC , ((MOVOL:230V , MOVOL:575V) + COOL:AIR , MOVOL:460V) + CAPPRE:ULCUL + CAPPRM:ASME + FREQ:60HZ) **(11/12/2018 - 11/12/2018)** ((((CAPPRM:AS1210 , CAPPRM:CE , CAPPRM:MHLW , CAPPRM:MOM) + MOVOL:400V , (CAPPRM:CE + MOVOL:500V , CAPPRM:MHLW + MOVOL:200V) + COOL:AIR) + FREQ:50HZ , (CAPPRM:ASME , CAPPRM:MHLW) + COOL:WATER + FREQ:60HZ + MOVOL:460V) + CAPPRE:IEC , ((MOVOL:230V , MOVOL:575V) + COOL:AIR , MOVOL:460V) + CAPPRE:ULCUL + CAPPRM:ASME + FREQ:60HZ)	S3
	Substituted by:	1089 9513 04 - CONTACT BLOCK (quantity: 1)			
	1088 0031 02	1	CONNECTOR 2-POLE	**(20/07/2017 - 20/08/2018)** ((((CAPPRM:AS1210 , CAPPRM:CE , CAPPRM:MHLW , CAPPRM:MOM) + MOVOL:400V , CAPPRM:CE + MOVOL:500V , CAPPRM:MHLW + MOVOL:200V) + FREQ:50HZ , (CAPPRM:ASME , CAPPRM:MHLW) + FREQ:60HZ + MOVOL:460V) + CAPPRE:IEC , (MOVOL:230V , MOVOL:460V , MOVOL:575V) + CAPPRE:ULCUL + CAPPRM:ASME + FREQ:60HZ) + COOL:AIR **(21/08/2018 - 10/12/2018)** ((((CAPPRM:AS1210 , CAPPRM:CE , CAPPRM:MHLW , CAPPRM:MOM) + MOVOL:400V , (CAPPRM:CE + MOVOL:500V , CAPPRM:MHLW + MOVOL:200V) + COOL:AIR) + FREQ:50HZ , (CAPPRM:ASME , CAPPRM:MHLW) + FREQ:60HZ + MOVOL:460V) + CAPPRE:IEC , ((MOVOL:230V , MOVOL:575V) + COOL:AIR , MOVOL:460V) + CAPPRE:ULCUL + CAPPRM:ASME + FREQ:60HZ) **(11/12/2018 - 11/12/2018)** ((((CAPPRM:AS1210 , CAPPRM:CE , CAPPRM:MHLW , CAPPRM:MOM) + MOVOL:400V , (CAPPRM:CE + MOVOL:500V , CAPPRM:MHLW + MOVOL:200V) + COOL:AIR) + FREQ:50HZ , (CAPPRM:ASME , CAPPRM:MHLW) + COOL:WATER + FREQ:60HZ + MOVOL:460V) + CAPPRE:IEC , ((MOVOL:230V , MOVOL:575V) + COOL:AIR , MOVOL:460V) + CAPPRE:ULCUL + CAPPRM:ASME + FREQ:60HZ)	
	Electrical legend:	X153 (Smartbox)			

Legend:

CAPPRE:IEC - Component approval electrical:IEC
CAPPRM:ASME - Component approval mechanical:ASME
CAPPRM:MOM - Component approval mechanical:MOM
FREQ:50HZ - Frequency:50 Hz
MODEL:GA110VP_16 - Model:GA 110VSD+
MOVOL:400V - Supply voltage:400 V
MOVOL:575V - Supply voltage:575 V
CAPPRE:ULCUL - Component approval electrical:UL/cUL
CAPPRM:CE - Component approval mechanical:CE
COOL:AIR - Cooling:Air cooled
FREQ:60HZ - Frequency:60 Hz
MOVOL:200V - Supply voltage:200 V
MOVOL:460V - Supply voltage:460 V
CAPPRM:AS1210 - Component approval mechanical:AS1210
CAPPRM:MHLW - Component approval mechanical:MHLW
COOL:WATER - Cooling:Water cooled
IDRY:Y - Integrated dryer:Yes
MOVOL:230V - Supply voltage:230 V
MOVOL:500V - Supply voltage:500 V

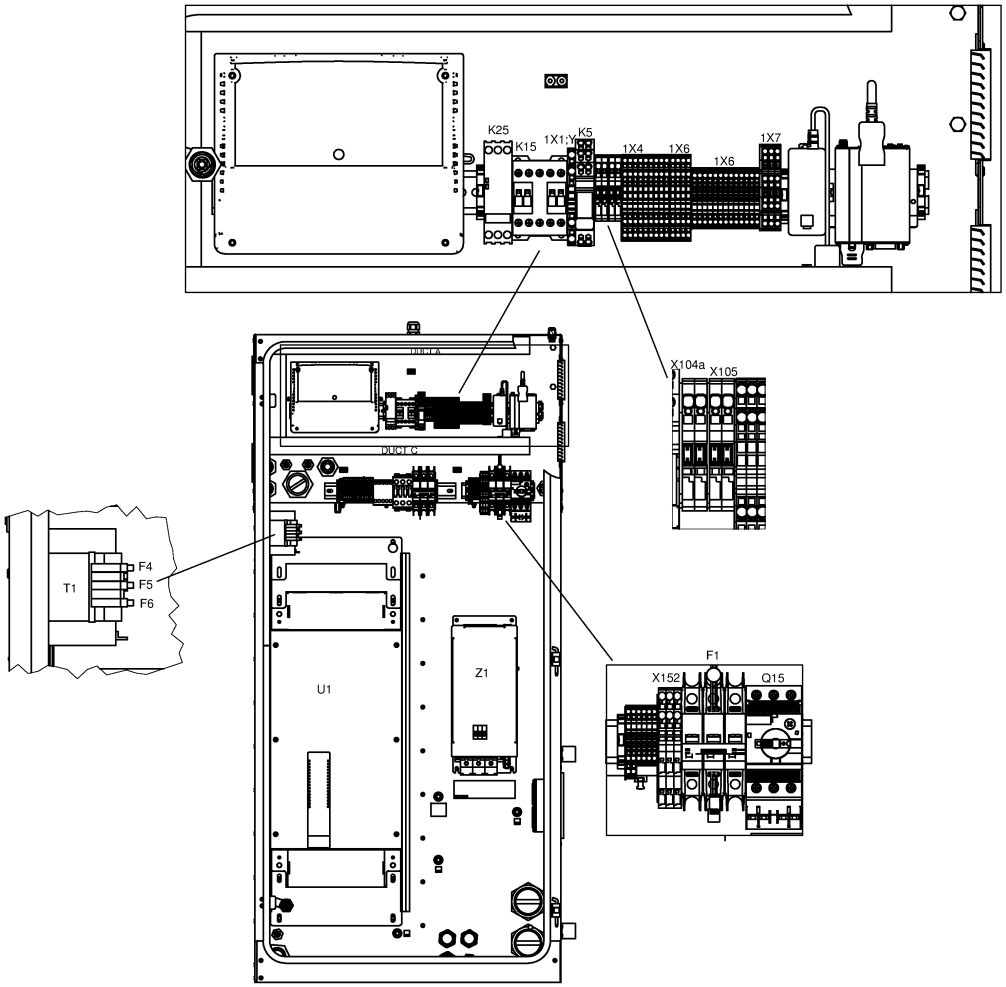
K25
K15
1X1:Y
K5
1X4
1X6
1X6
1X7
X104a
X105
DUCT A
DUCT C
T1
F4
F5
F6
U1
Z1
F1
X152
Q15

21.26 - Cubicle components GA 110 VSD+ - (200V-400V-500V/50Hz, 460V/60Hz - IEC, 230V-460V-575V/60Hz - UL-cUL) - Full-Feature (20/07/2017 - 11/12/2018)

(((MOVOL:200V , MOVOL:400V , MOVOL:500V) + FREQ:50HZ , FREQ:60HZ + MOVOL:460V) + CAPPRE:IEC , (MOVOL:230V , MOVOL:460V , MOVOL:575V) + CAPPRE:ULCUL + FREQ:60HZ) + IDRY:Y + MODEL:GA110VP_16

Ref	Part Number	Qty	Name	Validity	EL
	1088 0039 07	3	TERMINAL	**(20/07/2017 - 20/08/2018)** ((((CAPPRM:AS1210 , CAPPRM:CE , CAPPRM:MHLW , CAPPRM:MOM) + MOVOL:400V , CAPPRM:CE + MOVOL:500V , CAPPRM:MHLW + MOVOL:200V) + FREQ:50HZ , (CAPPRM:ASME , CAPPRM:MHLW) + FREQ:60HZ + MOVOL:460V) + CAPPRE:IEC , (MOVOL:230V , MOVOL:460V , MOVOL:575V) + CAPPRE:ULCUL + CAPPRM:ASME + FREQ:60HZ) + COOL:AIR **(21/08/2018 - 10/12/2018)** ((((CAPPRM:AS1210 , CAPPRM:CE , CAPPRM:MHLW , CAPPRM:MOM) + MOVOL:400V , (CAPPRM:CE + MOVOL:500V , CAPPRM:MHLW + MOVOL:200V) + COOL:AIR) + FREQ:50HZ , (CAPPRM:ASME , CAPPRM:MHLW) + FREQ:60HZ + MOVOL:460V) + CAPPRE:IEC , ((MOVOL:230V , MOVOL:575V) + COOL:AIR , MOVOL:460V) + CAPPRE:ULCUL + CAPPRM:ASME + FREQ:60HZ) **(11/12/2018 - 11/12/2018)** ((((CAPPRM:AS1210 , CAPPRM:CE , CAPPRM:MHLW , CAPPRM:MOM) + MOVOL:400V , (CAPPRM:CE + MOVOL:500V , CAPPRM:MHLW + MOVOL:200V) + COOL:AIR) + FREQ:50HZ , (CAPPRM:ASME , CAPPRM:MHLW) + COOL:WATER + FREQ:60HZ + MOVOL:460V) + CAPPRE:IEC , ((MOVOL:230V , MOVOL:575V) + COOL:AIR , MOVOL:460V) + CAPPRE:ULCUL + CAPPRM:ASME + FREQ:60HZ)	X152
	1088 0039 05	1	PLATE	**(20/07/2017 - 20/08/2018)** ((((CAPPRM:AS1210 , CAPPRM:CE , CAPPRM:MHLW , CAPPRM:MOM) + MOVOL:400V , CAPPRM:CE + MOVOL:500V , CAPPRM:MHLW + MOVOL:200V) + FREQ:50HZ , (CAPPRM:ASME , CAPPRM:MHLW) + FREQ:60HZ + MOVOL:460V) + CAPPRE:IEC , (MOVOL:230V , MOVOL:460V , MOVOL:575V) + CAPPRE:ULCUL + CAPPRM:ASME + FREQ:60HZ) + COOL:AIR **(21/08/2018 - 10/12/2018)** ((((CAPPRM:AS1210 , CAPPRM:CE , CAPPRM:MHLW , CAPPRM:MOM) + MOVOL:400V , (CAPPRM:CE + MOVOL:500V , CAPPRM:MHLW + MOVOL:200V) + COOL:AIR) + FREQ:50HZ , (CAPPRM:ASME , CAPPRM:MHLW) + FREQ:60HZ + MOVOL:460V) + CAPPRE:IEC , ((MOVOL:230V , MOVOL:575V) + COOL:AIR , MOVOL:460V) + CAPPRE:ULCUL + CAPPRM:ASME + FREQ:60HZ) **(11/12/2018 - 11/12/2018)** ((((CAPPRM:AS1210 , CAPPRM:CE , CAPPRM:MHLW , CAPPRM:MOM) + MOVOL:400V , (CAPPRM:CE + MOVOL:500V , CAPPRM:MHLW + MOVOL:200V) + COOL:AIR) + FREQ:50HZ , (CAPPRM:ASME , CAPPRM:MHLW) + COOL:WATER + FREQ:60HZ + MOVOL:460V) + CAPPRE:IEC , ((MOVOL:230V , MOVOL:575V) + COOL:AIR , MOVOL:460V) + CAPPRE:ULCUL + CAPPRM:ASME + FREQ:60HZ)	X152

Legend:

CAPPRE:IEC - Component approval electrical:IEC
CAPPRM:ASME - Component approval mechanical:ASME
CAPPRM:MOM - Component approval mechanical:MOM
FREQ:50HZ - Frequency:50 Hz
MODEL:GA110VP_16 - Model:GA 110VSD+
MOVOL:400V - Supply voltage:400 V
MOVOL:575V - Supply voltage:575 V
CAPPRE:ULCUL - Component approval electrical:UL/cUL
CAPPRM:CE - Component approval mechanical:CE
COOL:AIR - Cooling:Air cooled
FREQ:60HZ - Frequency:60 Hz
MOVOL:200V - Supply voltage:200 V
MOVOL:460V - Supply voltage:460 V
CAPPRM:AS1210 - Component approval mechanical:AS1210
CAPPRM:MHLW - Component approval mechanical:MHLW
COOL:WATER - Cooling:Water cooled
IDRY:Y - Integrated dryer:Yes
MOVOL:230V - Supply voltage:230 V
MOVOL:500V - Supply voltage:500 V

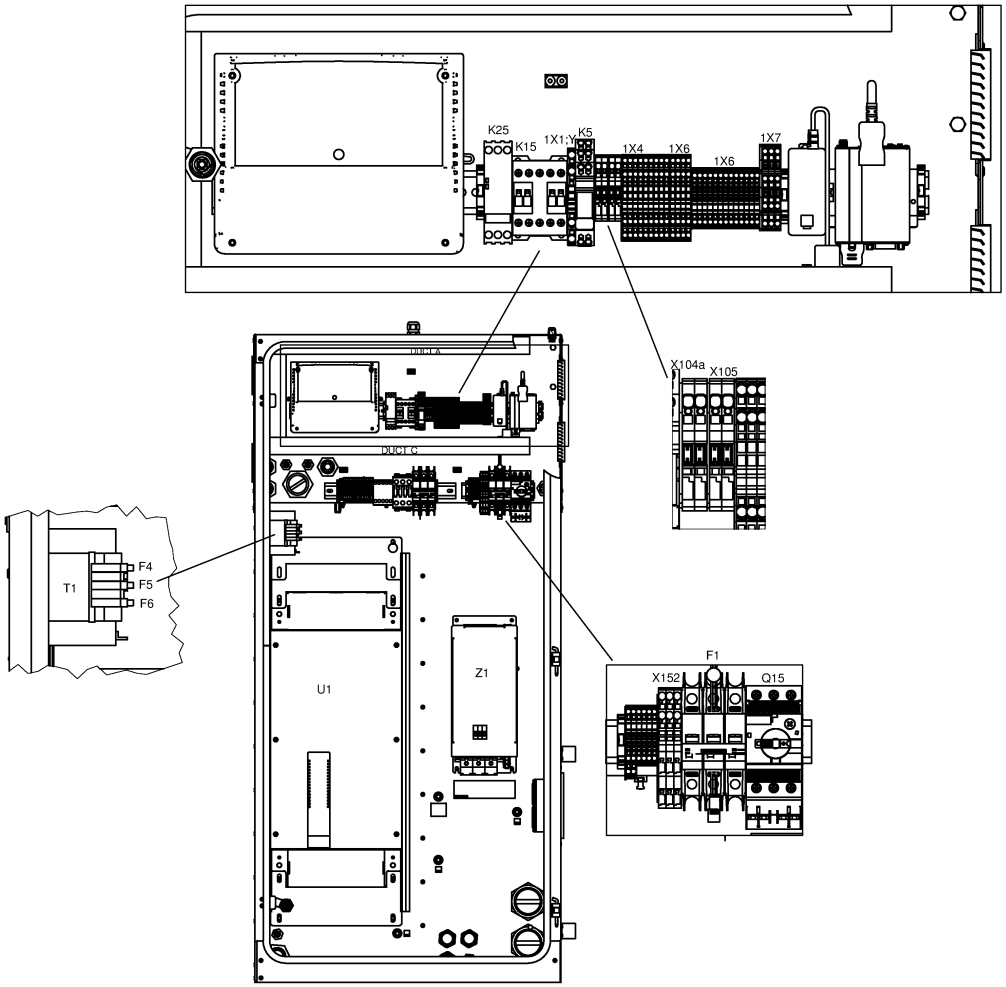
K25
K15
1X1:Y
K5
1X4
1X6
1X6
1X7
X104a
X105
DUCT A
DUCT C
T1
F4
F5
F6
U1
Z1
F1
X152
Q15

21.26 - Cubicle components GA 110 VSD+ - (200V-400V-500V/50Hz, 460V/60Hz - IEC, 230V-460V-575V/60Hz - UL-cUL) - Full-Feature (20/07/2017 - 11/12/2018)

(((MOVOL:200V , MOVOL:400V , MOVOL:500V) + FREQ:50HZ , FREQ:60HZ + MOVOL:460V) + CAPPRE:IEC , (MOVOL:230V , MOVOL:460V , MOVOL:575V) + CAPPRE:ULCUL + FREQ:60HZ) + IDRY:Y + MODEL:GA110VP_16

Ref	Part Number	Qty	Name	Validity	EL
	1088 0039 26	1	CONNECTOR	**(20/07/2017 - 20/08/2018)** ((((CAPPRM:AS1210 , CAPPRM:CE , CAPPRM:MHLW , CAPPRM:MOM) + MOVOL:400V , CAPPRM:CE + MOVOL:500V , CAPPRM:MHLW + MOVOL:200V) + FREQ:50HZ , (CAPPRM:ASME , CAPPRM:MHLW) + FREQ:60HZ + MOVOL:460V) + CAPPRE:IEC , (MOVOL:230V , MOVOL:460V , MOVOL:575V) + CAPPRE:ULCUL + CAPPRM:ASME + FREQ:60HZ) + COOL:AIR **(21/08/2018 - 10/12/2018)** ((((CAPPRM:AS1210 , CAPPRM:CE , CAPPRM:MHLW , CAPPRM:MOM) + MOVOL:400V , (CAPPRM:CE + MOVOL:500V , CAPPRM:MHLW + MOVOL:200V) + COOL:AIR) + FREQ:50HZ , (CAPPRM:ASME , CAPPRM:MHLW) + FREQ:60HZ + MOVOL:460V) + CAPPRE:IEC , ((MOVOL:230V , MOVOL:575V) + COOL:AIR , MOVOL:460V) + CAPPRE:ULCUL + CAPPRM:ASME + FREQ:60HZ) **(11/12/2018 - 11/12/2018)** ((((CAPPRM:AS1210 , CAPPRM:CE , CAPPRM:MHLW , CAPPRM:MOM) + MOVOL:400V , (CAPPRM:CE + MOVOL:500V , CAPPRM:MHLW + MOVOL:200V) + COOL:AIR) + FREQ:50HZ , (CAPPRM:ASME , CAPPRM:MHLW) + COOL:WATER + FREQ:60HZ + MOVOL:460V) + CAPPRE:IEC , ((MOVOL:230V , MOVOL:575V) + COOL:AIR , MOVOL:460V) + CAPPRE:ULCUL + CAPPRM:ASME + FREQ:60HZ)	
	Electrical legend:	X152 (remove coding pin 1,3)			
	1088 0037 99	4	PIN	**(20/07/2017 - 20/08/2018)** ((((CAPPRM:AS1210 , CAPPRM:CE , CAPPRM:MHLW , CAPPRM:MOM) + MOVOL:400V , CAPPRM:CE + MOVOL:500V , CAPPRM:MHLW + MOVOL:200V) + FREQ:50HZ , (CAPPRM:ASME , CAPPRM:MHLW) + FREQ:60HZ + MOVOL:460V) + CAPPRE:IEC , (MOVOL:230V , MOVOL:460V , MOVOL:575V) + CAPPRE:ULCUL + CAPPRM:ASME + FREQ:60HZ) + COOL:AIR **(21/08/2018 - 10/12/2018)** ((((CAPPRM:AS1210 , CAPPRM:CE , CAPPRM:MHLW , CAPPRM:MOM) + MOVOL:400V , (CAPPRM:CE + MOVOL:500V , CAPPRM:MHLW + MOVOL:200V) + COOL:AIR) + FREQ:50HZ , (CAPPRM:ASME , CAPPRM:MHLW) + FREQ:60HZ + MOVOL:460V) + CAPPRE:IEC , ((MOVOL:230V , MOVOL:575V) + COOL:AIR , MOVOL:460V) + CAPPRE:ULCUL + CAPPRM:ASME + FREQ:60HZ) **(11/12/2018 - 11/12/2018)** ((((CAPPRM:AS1210 , CAPPRM:CE , CAPPRM:MHLW , CAPPRM:MOM) + MOVOL:400V , (CAPPRM:CE + MOVOL:500V , CAPPRM:MHLW + MOVOL:200V) + COOL:AIR) + FREQ:50HZ , (CAPPRM:ASME , CAPPRM:MHLW) + COOL:WATER + FREQ:60HZ + MOVOL:460V) + CAPPRE:IEC , ((MOVOL:230V , MOVOL:575V) + COOL:AIR , MOVOL:460V) + CAPPRE:ULCUL + CAPPRM:ASME + FREQ:60HZ)	X152:1; 3

Legend:

CAPPRE:IEC - Component approval electrical:IEC
CAPPRM:ASME - Component approval mechanical:ASME
CAPPRM:MOM - Component approval mechanical:MOM
FREQ:50HZ - Frequency:50 Hz
MODEL:GA110VP_16 - Model:GA 110VSD+
MOVOL:400V - Supply voltage:400 V
MOVOL:575V - Supply voltage:575 V
CAPPRE:ULCUL - Component approval electrical:UL/cUL
CAPPRM:CE - Component approval mechanical:CE
COOL:AIR - Cooling:Air cooled
FREQ:60HZ - Frequency:60 Hz
MOVOL:200V - Supply voltage:200 V
MOVOL:460V - Supply voltage:460 V
CAPPRM:AS1210 - Component approval mechanical:AS1210
CAPPRM:MHLW - Component approval mechanical:MHLW
COOL:WATER - Cooling:Water cooled
IDRY:Y - Integrated dryer:Yes
MOVOL:230V - Supply voltage:230 V
MOVOL:500V - Supply voltage:500 V

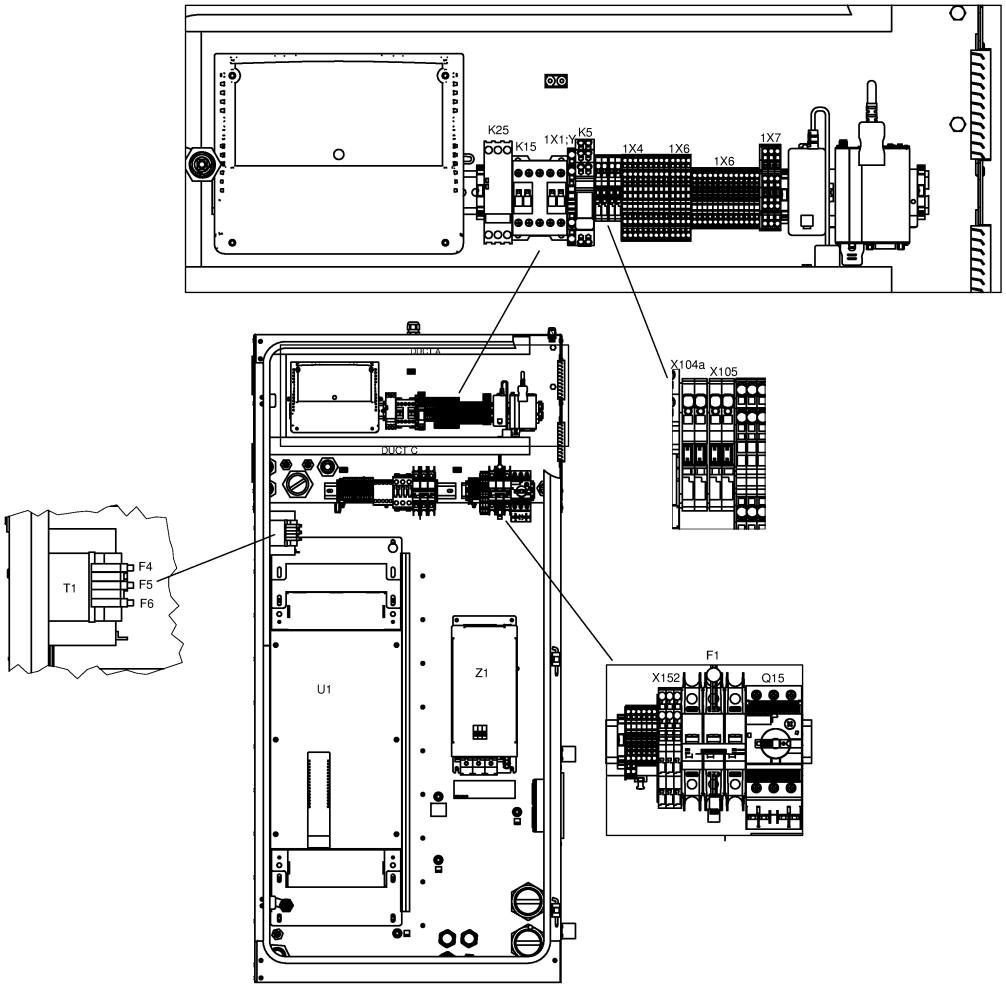
K25
K15
1X1:Y
K5
1X4
1X6
1X6
1X7
DUCT A
DUCT C
X104a
X105
T1
F4
F5
F6
U1
Z1
F1
X152
Q15

21.26 - Cubicle components GA 110 VSD+ - (200V-400V-500V/50Hz, 460V/60Hz - IEC, 230V-460V-575V/60Hz - UL-cUL) - Full-Feature (20/07/2017 - 11/12/2018)

(((MOVOL:200V , MOVOL:400V , MOVOL:500V) + FREQ:50HZ , FREQ:60HZ + MOVOL:460V) + CAPPRE:IEC , (MOVOL:230V , MOVOL:460V , MOVOL:575V) + CAPPRE:ULCUL + FREQ:60HZ) + IDRY:Y + MODEL:GA110VP_16

Ref	Part Number	Qty	Name	Validity	EL
	~~1088 0031 81~~	7	END STOP BRACKET	**(20/07/2017 - 20/08/2018)** ((((CAPPRM:AS1210 , CAPPRM:CE , CAPPRM:MHLW , CAPPRM:MOM) + MOVOL:400V , CAPPRM:CE + MOVOL:500V , CAPPRM:MHLW + MOVOL:200V) + FREQ:50HZ , (CAPPRM:ASME , CAPPRM:MHLW) + FREQ:60HZ + MOVOL:460V) + CAPPRE:IEC , (MOVOL:230V , MOVOL:460V , MOVOL:575V) + CAPPRE:ULCUL + CAPPRM:ASME + FREQ:60HZ) + COOL:AIR **(21/08/2018 - 10/12/2018)** ((((CAPPRM:AS1210 , CAPPRM:CE , CAPPRM:MHLW , CAPPRM:MOM) + MOVOL:400V , (CAPPRM:CE + MOVOL:500V , CAPPRM:MHLW + MOVOL:200V) + COOL:AIR) + FREQ:50HZ , (CAPPRM:ASME , CAPPRM:MHLW) + FREQ:60HZ + MOVOL:460V) + CAPPRE:IEC , ((MOVOL:230V , MOVOL:575V) + COOL:AIR , MOVOL:460V) + CAPPRE:ULCUL + CAPPRM:ASME + FREQ:60HZ) **(11/12/2018 - 11/12/2018)** ((((CAPPRM:AS1210 , CAPPRM:CE , CAPPRM:MHLW , CAPPRM:MOM) + MOVOL:400V , (CAPPRM:CE + MOVOL:500V , CAPPRM:MHLW + MOVOL:200V) + COOL:AIR) + FREQ:50HZ , (CAPPRM:ASME , CAPPRM:MHLW) + COOL:WATER + FREQ:60HZ + MOVOL:460V) + CAPPRE:IEC , ((MOVOL:230V , MOVOL:575V) + COOL:AIR , MOVOL:460V) + CAPPRE:ULCUL + CAPPRM:ASME + FREQ:60HZ)	
	Electrical legend:	Connector/terminal rail			
	Substituted by:	1089 0577 82 - END RETAINER (quantity: 1)			
	1088 0039 38	2	TERMINAL	**(20/07/2017 - 20/08/2018)** ((((CAPPRM:AS1210 , CAPPRM:CE , CAPPRM:MHLW , CAPPRM:MOM) + MOVOL:400V , CAPPRM:CE + MOVOL:500V , CAPPRM:MHLW + MOVOL:200V) + FREQ:50HZ , (CAPPRM:ASME , CAPPRM:MHLW) + FREQ:60HZ + MOVOL:460V) + CAPPRE:IEC , (MOVOL:230V , MOVOL:460V , MOVOL:575V) + CAPPRE:ULCUL + CAPPRM:ASME + FREQ:60HZ) + COOL:AIR **(21/08/2018 - 10/12/2018)** ((((CAPPRM:AS1210 , CAPPRM:CE , CAPPRM:MHLW , CAPPRM:MOM) + MOVOL:400V , (CAPPRM:CE + MOVOL:500V , CAPPRM:MHLW + MOVOL:200V) + COOL:AIR) + FREQ:50HZ , (CAPPRM:ASME , CAPPRM:MHLW) + FREQ:60HZ + MOVOL:460V) + CAPPRE:IEC , ((MOVOL:230V , MOVOL:575V) + COOL:AIR , MOVOL:460V) + CAPPRE:ULCUL + CAPPRM:ASME + FREQ:60HZ) **(11/12/2018 - 11/12/2018)** ((((CAPPRM:AS1210 , CAPPRM:CE , CAPPRM:MHLW , CAPPRM:MOM) + MOVOL:400V , (CAPPRM:CE + MOVOL:500V , CAPPRM:MHLW + MOVOL:200V) + COOL:AIR) + FREQ:50HZ , (CAPPRM:ASME , CAPPRM:MHLW) + COOL:WATER + FREQ:60HZ + MOVOL:460V) + CAPPRE:IEC , ((MOVOL:230V , MOVOL:575V) + COOL:AIR , MOVOL:460V) + CAPPRE:ULCUL + CAPPRM:ASME + FREQ:60HZ)	1X11:2,5

Legend:

CAPPRE:IEC - Component approval electrical:IEC
CAPPRM:ASME - Component approval mechanical:ASME
CAPPRM:MOM - Component approval mechanical:MOM
FREQ:50HZ - Frequency:50 Hz
MODEL:GA110VP_16 - Model:GA 110VSD+
MOVOL:400V - Supply voltage:400 V
MOVOL:575V - Supply voltage:575 V
CAPPRE:ULCUL - Component approval electrical:UL/cUL
CAPPRM:CE - Component approval mechanical:CE
COOL:AIR - Cooling:Air cooled
FREQ:60HZ - Frequency:60 Hz
MOVOL:200V - Supply voltage:200 V
MOVOL:460V - Supply voltage:460 V
CAPPRM:AS1210 - Component approval mechanical:AS1210
CAPPRM:MHLW - Component approval mechanical:MHLW
COOL:WATER - Cooling:Water cooled
IDRY:Y - Integrated dryer:Yes
MOVOL:230V - Supply voltage:230 V
MOVOL:500V - Supply voltage:500 V

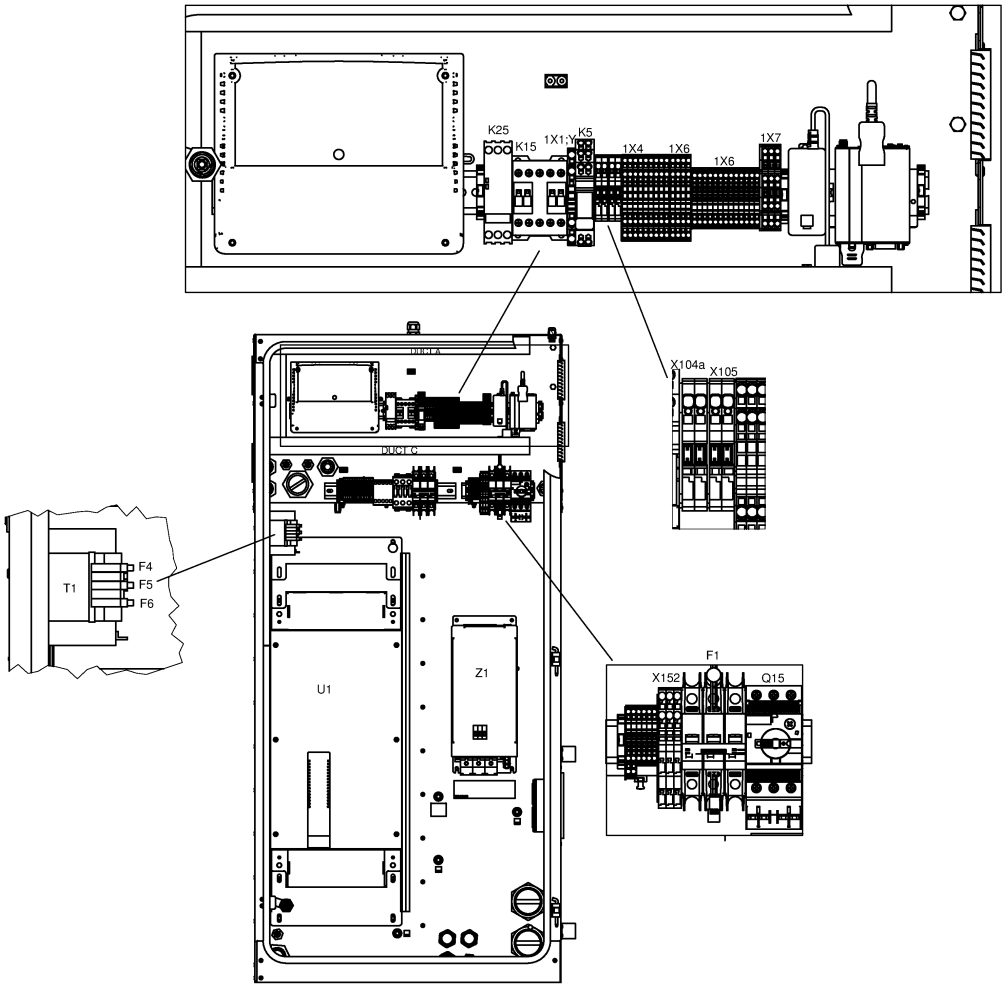
K25
K15
1X1:Y
K5
1X4
1X6
1X6
1X7
X104a
X105
DUCT A
DUCT C
T1
F4
F5
F6
U1
Z1
F1
X152
Q15

21.26 - Cubicle components GA 110 VSD+ - (200V-400V-500V/50Hz, 460V/60Hz - IEC, 230V-460V-575V/60Hz - UL-cUL) - Full-Feature (20/07/2017 - 11/12/2018)

(((MOVOL:200V , MOVOL:400V , MOVOL:500V) + FREQ:50HZ , FREQ:60HZ + MOVOL:460V) + CAPPRE:IEC , (MOVOL:230V , MOVOL:460V , MOVOL:575V) + CAPPRE:ULCUL + FREQ:60HZ) + IDRY:Y + MODEL:GA110VP_16

Ref	Part Number	Qty	Name	Validity	EL
	1088 0039 40	1	PLATE	**(20/07/2017 - 20/08/2018)** ((((CAPPRM:AS1210 , CAPPRM:CE , CAPPRM:MHLW , CAPPRM:MOM) + MOVOL:400V , CAPPRM:CE + MOVOL:500V , CAPPRM:MHLW + MOVOL:200V) + FREQ:50HZ , (CAPPRM:ASME , CAPPRM:MHLW) + FREQ:60HZ + MOVOL:460V) + CAPPRE:IEC , (MOVOL:230V , MOVOL:460V , MOVOL:575V) + CAPPRE:ULCUL + CAPPRM:ASME + FREQ:60HZ) + COOL:AIR **(21/08/2018 - 10/12/2018)** ((((CAPPRM:AS1210 , CAPPRM:CE , CAPPRM:MHLW , CAPPRM:MOM) + MOVOL:400V , (CAPPRM:CE + MOVOL:500V , CAPPRM:MHLW + MOVOL:200V) + COOL:AIR) + FREQ:50HZ , (CAPPRM:ASME , CAPPRM:MHLW) + FREQ:60HZ + MOVOL:460V) + CAPPRE:IEC , ((MOVOL:230V , MOVOL:575V) + COOL:AIR , MOVOL:460V) + CAPPRE:ULCUL + CAPPRM:ASME + FREQ:60HZ) **(11/12/2018 - 11/12/2018)** ((((CAPPRM:AS1210 , CAPPRM:CE , CAPPRM:MHLW , CAPPRM:MOM) + MOVOL:400V , (CAPPRM:CE + MOVOL:500V , CAPPRM:MHLW + MOVOL:200V) + COOL:AIR) + FREQ:50HZ , (CAPPRM:ASME , CAPPRM:MHLW) + COOL:WATER + FREQ:60HZ + MOVOL:460V) + CAPPRE:IEC , ((MOVOL:230V , MOVOL:575V) + COOL:AIR , MOVOL:460V) + CAPPRE:ULCUL + CAPPRM:ASME + FREQ:60HZ)	1X11
	1088 0039 34	4	TERMINAL	**(20/07/2017 - 20/08/2018)** ((((CAPPRM:AS1210 , CAPPRM:CE , CAPPRM:MHLW , CAPPRM:MOM) + MOVOL:400V , CAPPRM:CE + MOVOL:500V , CAPPRM:MHLW + MOVOL:200V) + FREQ:50HZ , (CAPPRM:ASME , CAPPRM:MHLW) + FREQ:60HZ + MOVOL:460V) + CAPPRE:IEC , (MOVOL:230V , MOVOL:460V , MOVOL:575V) + CAPPRE:ULCUL + CAPPRM:ASME + FREQ:60HZ) + COOL:AIR **(21/08/2018 - 10/12/2018)** ((((CAPPRM:AS1210 , CAPPRM:CE , CAPPRM:MHLW , CAPPRM:MOM) + MOVOL:400V , (CAPPRM:CE + MOVOL:500V , CAPPRM:MHLW + MOVOL:200V) + COOL:AIR) + FREQ:50HZ , (CAPPRM:ASME , CAPPRM:MHLW) + FREQ:60HZ + MOVOL:460V) + CAPPRE:IEC , ((MOVOL:230V , MOVOL:575V) + COOL:AIR , MOVOL:460V) + CAPPRE:ULCUL + CAPPRM:ASME + FREQ:60HZ) **(11/12/2018 - 11/12/2018)** ((((CAPPRM:AS1210 , CAPPRM:CE , CAPPRM:MHLW , CAPPRM:MOM) + MOVOL:400V , (CAPPRM:CE + MOVOL:500V , CAPPRM:MHLW + MOVOL:200V) + COOL:AIR) + FREQ:50HZ , (CAPPRM:ASME , CAPPRM:MHLW) + COOL:WATER + FREQ:60HZ + MOVOL:460V) + CAPPRE:IEC , ((MOVOL:230V , MOVOL:575V) + COOL:AIR , MOVOL:460V) + CAPPRE:ULCUL + CAPPRM:ASME + FREQ:60HZ)	
	Electrical legend:	1X11:30,301,34			

Legend:

CAPPRE:IEC - Component approval electrical:IEC
CAPPRM:ASME - Component approval mechanical:ASME
CAPPRM:MOM - Component approval mechanical:MOM
FREQ:50HZ - Frequency:50 Hz
MODEL:GA110VP_16 - Model:GA 110VSD+
MOVOL:400V - Supply voltage:400 V
MOVOL:575V - Supply voltage:575 V
CAPPRE:ULCUL - Component approval electrical:UL/cUL
CAPPRM:CE - Component approval mechanical:CE
COOL:AIR - Cooling:Air cooled
FREQ:60HZ - Frequency:60 Hz
MOVOL:200V - Supply voltage:200 V
MOVOL:460V - Supply voltage:460 V
CAPPRM:AS1210 - Component approval mechanical:AS1210
CAPPRM:MHLW - Component approval mechanical:MHLW
COOL:WATER - Cooling:Water cooled
IDRY:Y - Integrated dryer:Yes
MOVOL:230V - Supply voltage:230 V
MOVOL:500V - Supply voltage:500 V

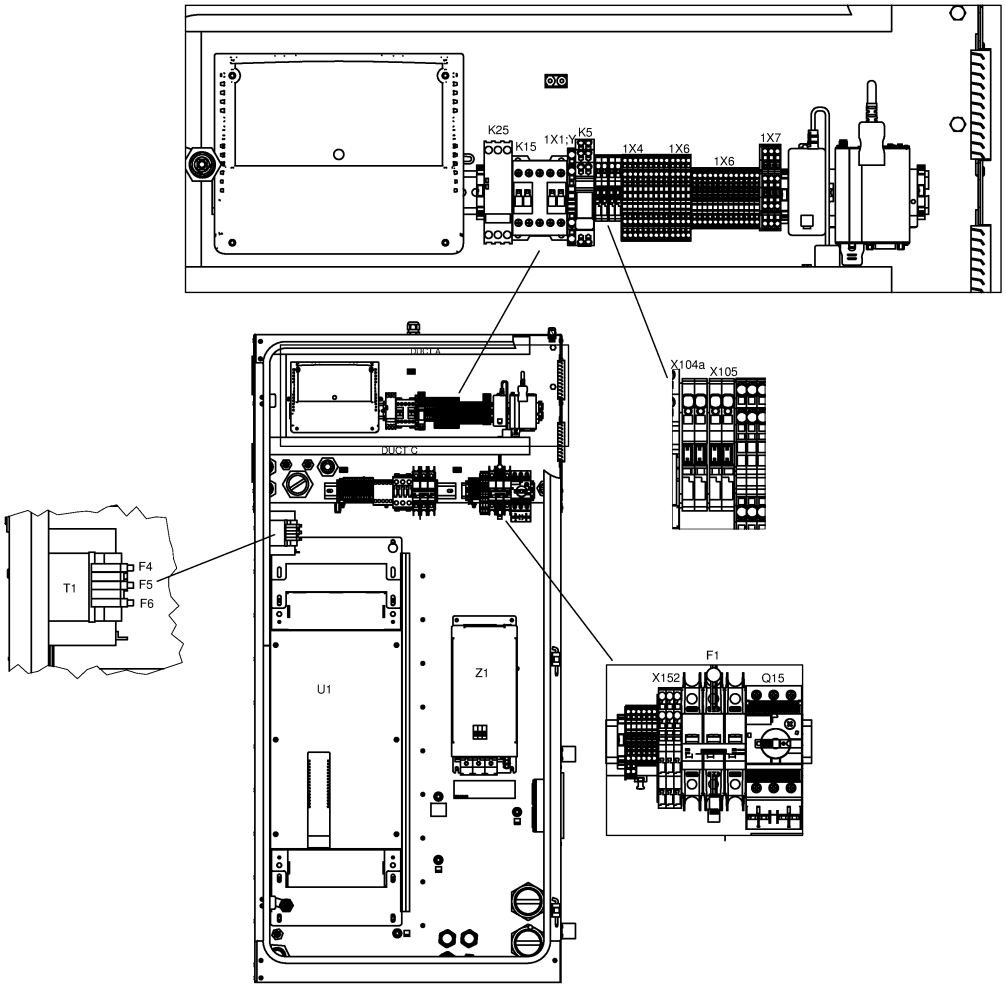
K25
K15
1X1:Y
K5
1X4
1X6
1X6
1X7
X104a
X105
DUCT A
DUCT C
T1
F4
F5
F6
U1
Z1
F1
X152
Q15

21.26 - Cubicle components GA 110 VSD+ - (200V-400V-500V/50Hz, 460V/60Hz - IEC, 230V-460V-575V/60Hz - UL-cUL) - Full-Feature (20/07/2017 - 11/12/2018)

(((MOVOL:200V , MOVOL:400V , MOVOL:500V) + FREQ:50HZ , FREQ:60HZ + MOVOL:460V) + CAPPRE:IEC , (MOVOL:230V , MOVOL:460V , MOVOL:575V) + CAPPRE:ULCUL + FREQ:60HZ) + IDRY:Y + MODEL:GA110VP_16

Ref	Part Number	Qty	Name	Validity	EL
	1088 0039 35	1	PLATE	**(20/07/2017 - 20/08/2018)** ((((CAPPRM:AS1210 , CAPPRM:CE , CAPPRM:MHLW , CAPPRM:MOM) + MOVOL:400V , CAPPRM:CE + MOVOL:500V , CAPPRM:MHLW + MOVOL:200V) + FREQ:50HZ , (CAPPRM:ASME , CAPPRM:MHLW) + FREQ:60HZ + MOVOL:460V) + CAPPRE:IEC , (MOVOL:230V , MOVOL:460V , MOVOL:575V) + CAPPRE:ULCUL + CAPPRM:ASME + FREQ:60HZ) + COOL:AIR **(21/08/2018 - 10/12/2018)** ((((CAPPRM:AS1210 , CAPPRM:CE , CAPPRM:MHLW , CAPPRM:MOM) + MOVOL:400V , (CAPPRM:CE + MOVOL:500V , CAPPRM:MHLW + MOVOL:200V) + COOL:AIR) + FREQ:50HZ , (CAPPRM:ASME , CAPPRM:MHLW) + FREQ:60HZ + MOVOL:460V) + CAPPRE:IEC , ((MOVOL:230V , MOVOL:575V) + COOL:AIR , MOVOL:460V) + CAPPRE:ULCUL + CAPPRM:ASME + FREQ:60HZ) **(11/12/2018 - 11/12/2018)** ((((CAPPRM:AS1210 , CAPPRM:CE , CAPPRM:MHLW , CAPPRM:MOM) + MOVOL:400V , (CAPPRM:CE + MOVOL:500V , CAPPRM:MHLW + MOVOL:200V) + COOL:AIR) + FREQ:50HZ , (CAPPRM:ASME , CAPPRM:MHLW) + COOL:WATER + FREQ:60HZ + MOVOL:460V) + CAPPRE:IEC , ((MOVOL:230V , MOVOL:575V) + COOL:AIR , MOVOL:460V) + CAPPRE:ULCUL + CAPPRM:ASME + FREQ:60HZ)	1X11
	1088 0039 04	2	TERMINAL	**(20/07/2017 - 20/08/2018)** ((((CAPPRM:AS1210 , CAPPRM:CE , CAPPRM:MHLW , CAPPRM:MOM) + MOVOL:400V , CAPPRM:CE + MOVOL:500V , CAPPRM:MHLW + MOVOL:200V) + FREQ:50HZ , (CAPPRM:ASME , CAPPRM:MHLW) + FREQ:60HZ + MOVOL:460V) + CAPPRE:IEC , (MOVOL:230V , MOVOL:460V , MOVOL:575V) + CAPPRE:ULCUL + CAPPRM:ASME + FREQ:60HZ) + COOL:AIR **(21/08/2018 - 10/12/2018)** ((((CAPPRM:AS1210 , CAPPRM:CE , CAPPRM:MHLW , CAPPRM:MOM) + MOVOL:400V , (CAPPRM:CE + MOVOL:500V , CAPPRM:MHLW + MOVOL:200V) + COOL:AIR) + FREQ:50HZ , (CAPPRM:ASME , CAPPRM:MHLW) + FREQ:60HZ + MOVOL:460V) + CAPPRE:IEC , ((MOVOL:230V , MOVOL:575V) + COOL:AIR , MOVOL:460V) + CAPPRE:ULCUL + CAPPRM:ASME + FREQ:60HZ) **(11/12/2018 - 11/12/2018)** ((((CAPPRM:AS1210 , CAPPRM:CE , CAPPRM:MHLW , CAPPRM:MOM) + MOVOL:400V , (CAPPRM:CE + MOVOL:500V , CAPPRM:MHLW + MOVOL:200V) + COOL:AIR) + FREQ:50HZ , (CAPPRM:ASME , CAPPRM:MHLW) + COOL:WATER + FREQ:60HZ + MOVOL:460V) + CAPPRE:IEC , ((MOVOL:230V , MOVOL:575V) + COOL:AIR , MOVOL:460V) + CAPPRE:ULCUL + CAPPRM:ASME + FREQ:60HZ)	X104a

Legend:

CAPPRE:IEC - Component approval electrical:IEC
CAPPRM:ASME - Component approval mechanical:ASME
CAPPRM:MOM - Component approval mechanical:MOM
FREQ:50HZ - Frequency:50 Hz
MODEL:GA110VP_16 - Model:GA 110VSD+
MOVOL:400V - Supply voltage:400 V
MOVOL:575V - Supply voltage:575 V
CAPPRE:ULCUL - Component approval electrical:UL/cUL
CAPPRM:CE - Component approval mechanical:CE
COOL:AIR - Cooling:Air cooled
FREQ:60HZ - Frequency:60 Hz
MOVOL:200V - Supply voltage:200 V
MOVOL:460V - Supply voltage:460 V
CAPPRM:AS1210 - Component approval mechanical:AS1210
CAPPRM:MHLW - Component approval mechanical:MHLW
COOL:WATER - Cooling:Water cooled
IDRY:Y - Integrated dryer:Yes
MOVOL:230V - Supply voltage:230 V
MOVOL:500V - Supply voltage:500 V

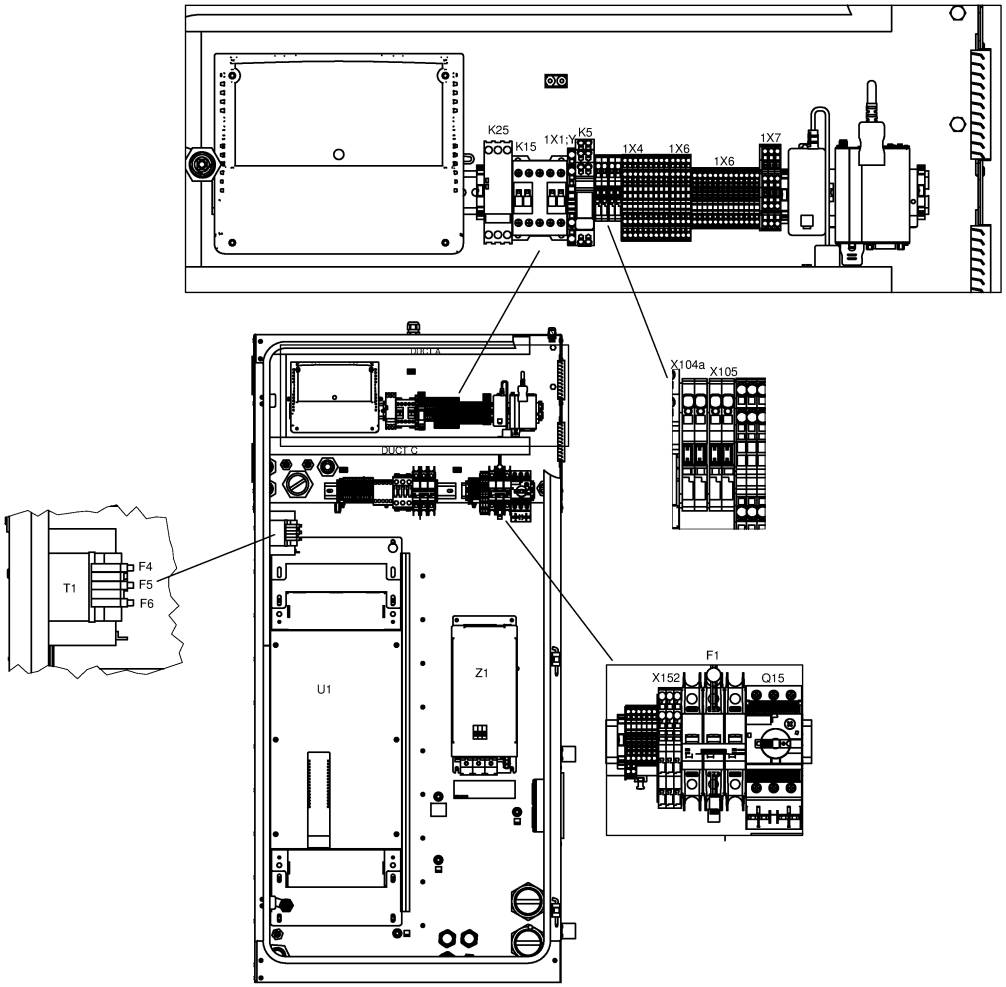
K25
K15
1X1:Y
K5
1X4
1X6
1X6
1X7
X104a
X105
DUCT A
DUCT C
T1
F4
F5
F6
U1
Z1
F1
X152
Q15

21.26 - Cubicle components GA 110 VSD+ - (200V-400V-500V/50Hz, 460V/60Hz - IEC, 230V-460V-575V/60Hz - UL-cUL) - Full-Feature (20/07/2017 - 11/12/2018)

(((MOVOL:200V , MOVOL:400V , MOVOL:500V) + FREQ:50HZ , FREQ:60HZ + MOVOL:460V) + CAPPRE:IEC , (MOVOL:230V , MOVOL:460V , MOVOL:575V) + CAPPRE:ULCUL + FREQ:60HZ) + IDRY:Y + MODEL:GA110VP_16

Ref	Part Number	Qty	Name	Validity	EL
	1088 0037 99	2	PIN	**(20/07/2017 - 20/08/2018)** ((((CAPPRM:AS1210 , CAPPRM:CE , CAPPRM:MHLW , CAPPRM:MOM) + MOVOL:400V , CAPPRM:CE + MOVOL:500V , CAPPRM:MHLW + MOVOL:200V) + FREQ:50HZ , (CAPPRM:ASME , CAPPRM:MHLW) + FREQ:60HZ + MOVOL:460V) + CAPPRE:IEC , (MOVOL:230V , MOVOL:460V , MOVOL:575V) + CAPPRE:ULCUL + CAPPRM:ASME + FREQ:60HZ) + COOL:AIR **(21/08/2018 - 10/12/2018)** ((((CAPPRM:AS1210 , CAPPRM:CE , CAPPRM:MHLW , CAPPRM:MOM) + MOVOL:400V , (CAPPRM:CE + MOVOL:500V , CAPPRM:MHLW + MOVOL:200V) + COOL:AIR) + FREQ:50HZ , (CAPPRM:ASME , CAPPRM:MHLW) + FREQ:60HZ + MOVOL:460V) + CAPPRE:IEC , ((MOVOL:230V , MOVOL:575V) + COOL:AIR , MOVOL:460V) + CAPPRE:ULCUL + CAPPRM:ASME + FREQ:60HZ) **(11/12/2018 - 11/12/2018)** ((((CAPPRM:AS1210 , CAPPRM:CE , CAPPRM:MHLW , CAPPRM:MOM) + MOVOL:400V , (CAPPRM:CE + MOVOL:500V , CAPPRM:MHLW + MOVOL:200V) + COOL:AIR) + FREQ:50HZ , (CAPPRM:ASME , CAPPRM:MHLW) + COOL:WATER + FREQ:60HZ + MOVOL:460V) + CAPPRE:IEC , ((MOVOL:230V , MOVOL:575V) + COOL:AIR , MOVOL:460V) + CAPPRE:ULCUL + CAPPRM:ASME + FREQ:60HZ)	X104a/X105
	1088 0039 02	1	PLATE	**(20/07/2017 - 20/08/2018)** ((((CAPPRM:AS1210 , CAPPRM:CE , CAPPRM:MHLW , CAPPRM:MOM) + MOVOL:400V , CAPPRM:CE + MOVOL:500V , CAPPRM:MHLW + MOVOL:200V) + FREQ:50HZ , (CAPPRM:ASME , CAPPRM:MHLW) + FREQ:60HZ + MOVOL:460V) + CAPPRE:IEC , (MOVOL:230V , MOVOL:460V , MOVOL:575V) + CAPPRE:ULCUL + CAPPRM:ASME + FREQ:60HZ) + COOL:AIR **(21/08/2018 - 10/12/2018)** ((((CAPPRM:AS1210 , CAPPRM:CE , CAPPRM:MHLW , CAPPRM:MOM) + MOVOL:400V , (CAPPRM:CE + MOVOL:500V , CAPPRM:MHLW + MOVOL:200V) + COOL:AIR) + FREQ:50HZ , (CAPPRM:ASME , CAPPRM:MHLW) + FREQ:60HZ + MOVOL:460V) + CAPPRE:IEC , ((MOVOL:230V , MOVOL:575V) + COOL:AIR , MOVOL:460V) + CAPPRE:ULCUL + CAPPRM:ASME + FREQ:60HZ) **(11/12/2018 - 11/12/2018)** ((((CAPPRM:AS1210 , CAPPRM:CE , CAPPRM:MHLW , CAPPRM:MOM) + MOVOL:400V , (CAPPRM:CE + MOVOL:500V , CAPPRM:MHLW + MOVOL:200V) + COOL:AIR) + FREQ:50HZ , (CAPPRM:ASME , CAPPRM:MHLW) + COOL:WATER + FREQ:60HZ + MOVOL:460V) + CAPPRE:IEC , ((MOVOL:230V , MOVOL:575V) + COOL:AIR , MOVOL:460V) + CAPPRE:ULCUL + CAPPRM:ASME + FREQ:60HZ)	X104a

Legend:

CAPPRE:IEC - Component approval electrical:IEC
CAPPRM:ASME - Component approval mechanical:ASME
CAPPRM:MOM - Component approval mechanical:MOM
FREQ:50HZ - Frequency:50 Hz
MODEL:GA110VP_16 - Model:GA 110VSD+
MOVOL:400V - Supply voltage:400 V
MOVOL:575V - Supply voltage:575 V
CAPPRE:ULCUL - Component approval electrical:UL/cUL
CAPPRM:CE - Component approval mechanical:CE
COOL:AIR - Cooling:Air cooled
FREQ:60HZ - Frequency:60 Hz
MOVOL:200V - Supply voltage:200 V
MOVOL:460V - Supply voltage:460 V
CAPPRM:AS1210 - Component approval mechanical:AS1210
CAPPRM:MHLW - Component approval mechanical:MHLW
COOL:WATER - Cooling:Water cooled
IDRY:Y - Integrated dryer:Yes
MOVOL:230V - Supply voltage:230 V
MOVOL:500V - Supply voltage:500 V

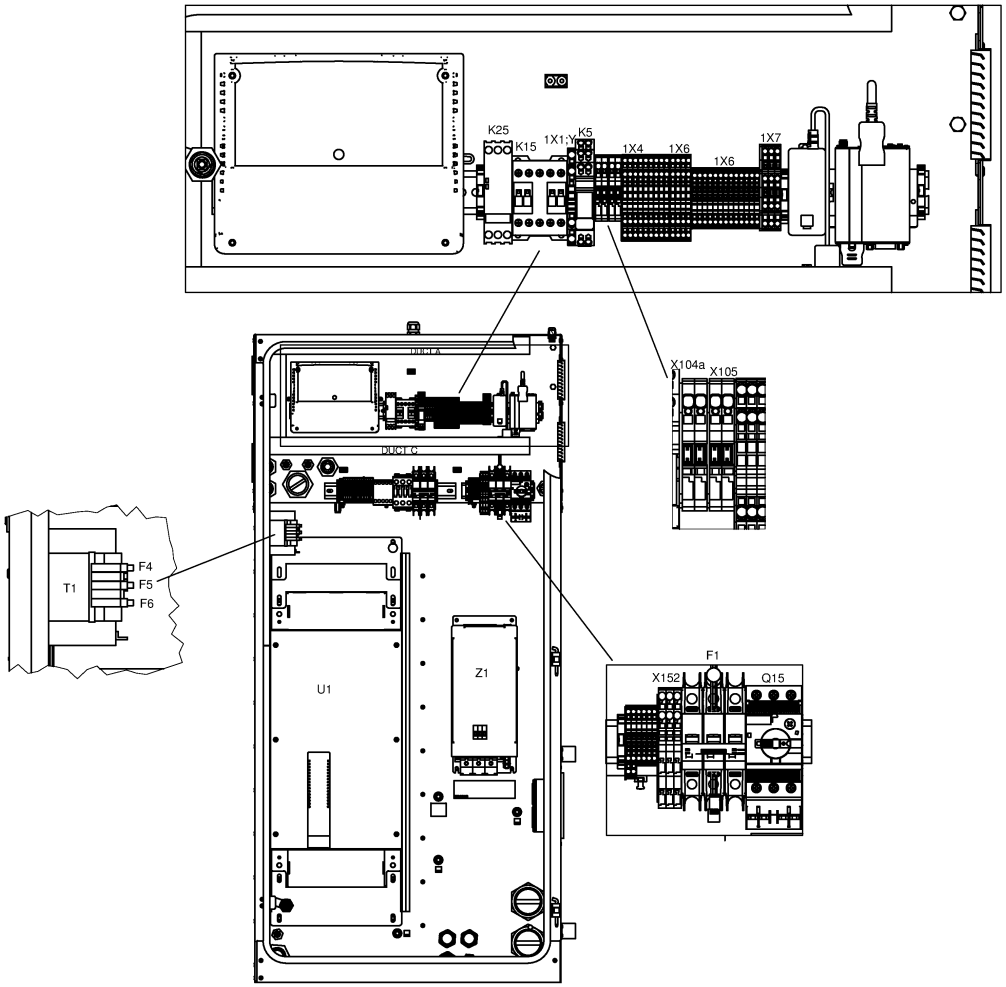
K25
K15
1X1:Y
K5
1X4
1X6
1X6
1X7
X104a
X105
DUCT A
DUCT C
T1
F4
F5
F6
U1
Z1
F1
X152
Q15

21.26 - Cubicle components GA 110 VSD+ - (200V-400V-500V/50Hz, 460V/60Hz - IEC, 230V-460V-575V/60Hz - UL-cUL) - Full-Feature (20/07/2017 - 11/12/2018)

(((MOVOL:200V , MOVOL:400V , MOVOL:500V) + FREQ:50HZ , FREQ:60HZ + MOVOL:460V) + CAPPRE:IEC , (MOVOL:230V , MOVOL:460V , MOVOL:575V) + CAPPRE:ULCUL + FREQ:60HZ) + IDRY:Y + MODEL:GA110VP_16

Ref	Part Number	Qty	Name	Validity	EL
	1088 0039 04	2	TERMINAL	**(20/07/2017 - 20/08/2018)** ((((CAPPRM:AS1210 , CAPPRM:CE , CAPPRM:MHLW , CAPPRM:MOM) + MOVOL:400V , CAPPRM:CE + MOVOL:500V , CAPPRM:MHLW + MOVOL:200V) + FREQ:50HZ , (CAPPRM:ASME , CAPPRM:MHLW) + FREQ:60HZ + MOVOL:460V) + CAPPRE:IEC , (MOVOL:230V , MOVOL:460V , MOVOL:575V) + CAPPRE:ULCUL + CAPPRM:ASME + FREQ:60HZ) + COOL:AIR **(21/08/2018 - 10/12/2018)** ((((CAPPRM:AS1210 , CAPPRM:CE , CAPPRM:MHLW , CAPPRM:MOM) + MOVOL:400V , (CAPPRM:CE + MOVOL:500V , CAPPRM:MHLW + MOVOL:200V) + COOL:AIR) + FREQ:50HZ , (CAPPRM:ASME , CAPPRM:MHLW) + FREQ:60HZ + MOVOL:460V) + CAPPRE:IEC , ((MOVOL:230V , MOVOL:575V) + COOL:AIR , MOVOL:460V) + CAPPRE:ULCUL + CAPPRM:ASME + FREQ:60HZ) **(11/12/2018 - 11/12/2018)** ((((CAPPRM:AS1210 , CAPPRM:CE , CAPPRM:MHLW , CAPPRM:MOM) + MOVOL:400V , (CAPPRM:CE + MOVOL:500V , CAPPRM:MHLW + MOVOL:200V) + COOL:AIR) + FREQ:50HZ , (CAPPRM:ASME , CAPPRM:MHLW) + COOL:WATER + FREQ:60HZ + MOVOL:460V) + CAPPRE:IEC , ((MOVOL:230V , MOVOL:575V) + COOL:AIR , MOVOL:460V) + CAPPRE:ULCUL + CAPPRM:ASME + FREQ:60HZ)	
	1088 0039 02	1	PLATE	**(20/07/2017 - 20/08/2018)** ((((CAPPRM:AS1210 , CAPPRM:CE , CAPPRM:MHLW , CAPPRM:MOM) + MOVOL:400V , CAPPRM:CE + MOVOL:500V , CAPPRM:MHLW + MOVOL:200V) + FREQ:50HZ , (CAPPRM:ASME , CAPPRM:MHLW) + FREQ:60HZ + MOVOL:460V) + CAPPRE:IEC , (MOVOL:230V , MOVOL:460V , MOVOL:575V) + CAPPRE:ULCUL + CAPPRM:ASME + FREQ:60HZ) + COOL:AIR **(21/08/2018 - 10/12/2018)** ((((CAPPRM:AS1210 , CAPPRM:CE , CAPPRM:MHLW , CAPPRM:MOM) + MOVOL:400V , (CAPPRM:CE + MOVOL:500V , CAPPRM:MHLW + MOVOL:200V) + COOL:AIR) + FREQ:50HZ , (CAPPRM:ASME , CAPPRM:MHLW) + FREQ:60HZ + MOVOL:460V) + CAPPRE:IEC , ((MOVOL:230V , MOVOL:575V) + COOL:AIR , MOVOL:460V) + CAPPRE:ULCUL + CAPPRM:ASME + FREQ:60HZ) **(11/12/2018 - 11/12/2018)** ((((CAPPRM:AS1210 , CAPPRM:CE , CAPPRM:MHLW , CAPPRM:MOM) + MOVOL:400V , (CAPPRM:CE + MOVOL:500V , CAPPRM:MHLW + MOVOL:200V) + COOL:AIR) + FREQ:50HZ , (CAPPRM:ASME , CAPPRM:MHLW) + COOL:WATER + FREQ:60HZ + MOVOL:460V) + CAPPRE:IEC , ((MOVOL:230V , MOVOL:575V) + COOL:AIR , MOVOL:460V) + CAPPRE:ULCUL + CAPPRM:ASME + FREQ:60HZ)	

Legend:

CAPPRE:IEC - Component approval electrical:IEC
CAPPRM:ASME - Component approval mechanical:ASME
CAPPRM:MOM - Component approval mechanical:MOM
FREQ:50HZ - Frequency:50 Hz
MODEL:GA110VP_16 - Model:GA 110VSD+
MOVOL:400V - Supply voltage:400 V
MOVOL:575V - Supply voltage:575 V
CAPPRE:ULCUL - Component approval electrical:UL/cUL
CAPPRM:CE - Component approval mechanical:CE
COOL:AIR - Cooling:Air cooled
FREQ:60HZ - Frequency:60 Hz
MOVOL:200V - Supply voltage:200 V
MOVOL:460V - Supply voltage:460 V
CAPPRM:AS1210 - Component approval mechanical:AS1210
CAPPRM:MHLW - Component approval mechanical:MHLW
COOL:WATER - Cooling:Water cooled
IDRY:Y - Integrated dryer:Yes
MOVOL:230V - Supply voltage:230 V
MOVOL:500V - Supply voltage:500 V

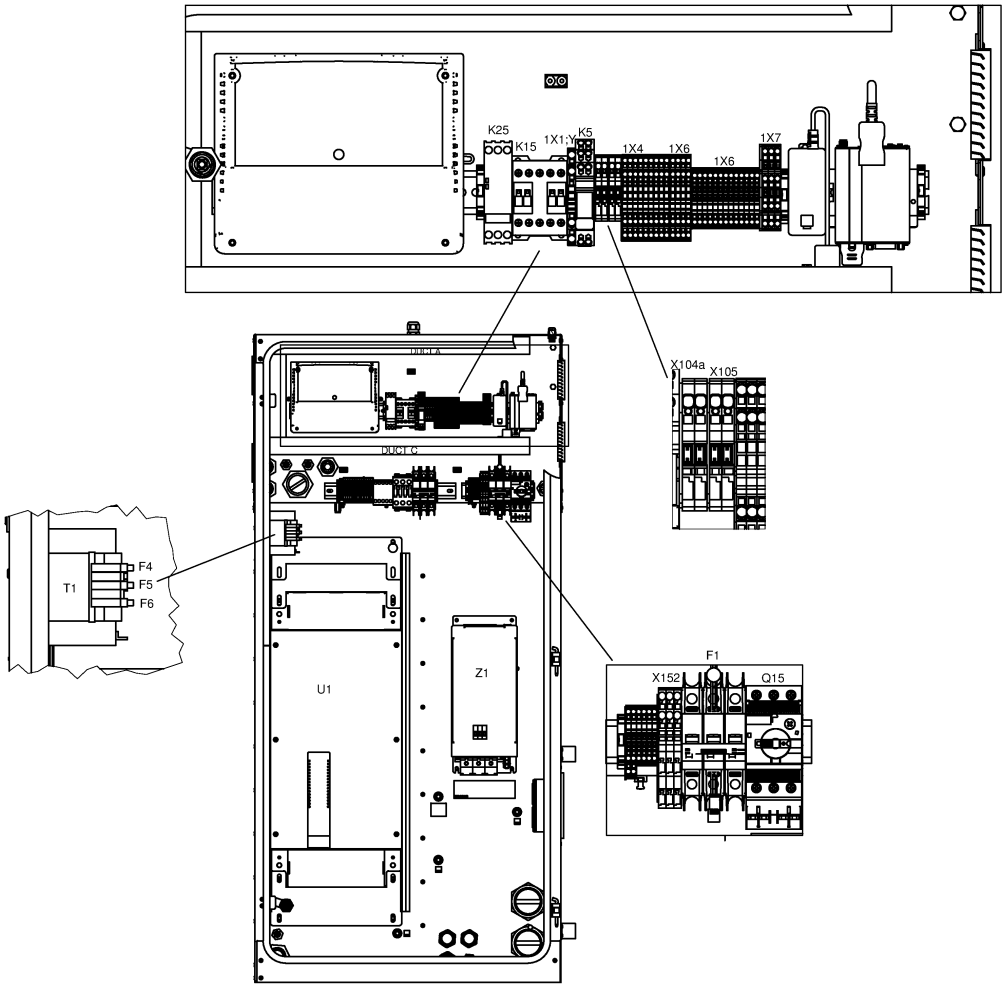
K25
K15
1X1:Y
K5
1X4
1X6
1X6
1X7
DUCT A
DUCT C
X104a
X105
T1
F4
F5
F6
U1
Z1
F1
X152
Q15

21.26 - Cubicle components GA 110 VSD+ - (200V-400V-500V/50Hz, 460V/60Hz - IEC, 230V-460V-575V/60Hz - UL-cUL) - Full-Feature (20/07/2017 - 11/12/2018)

(((MOVOL:200V , MOVOL:400V , MOVOL:500V) + FREQ:50HZ , FREQ:60HZ + MOVOL:460V) + CAPPRE:IEC , (MOVOL:230V , MOVOL:460V , MOVOL:575V) + CAPPRE:ULCUL + FREQ:60HZ) + IDRY:Y + MODEL:GA110VP_16

Ref	Part Number	Qty	Name	Validity	EL
	1088 0039 34	13	TERMINAL	**(20/07/2017 - 20/08/2018)** ((((CAPPRM:AS1210 , CAPPRM:CE , CAPPRM:MHLW , CAPPRM:MOM) + MOVOL:400V , CAPPRM:CE + MOVOL:500V , CAPPRM:MHLW + MOVOL:200V) + FREQ:50HZ , (CAPPRM:ASME , CAPPRM:MHLW) + FREQ:60HZ + MOVOL:460V) + CAPPRE:IEC , (MOVOL:230V , MOVOL:460V , MOVOL:575V) + CAPPRE:ULCUL + CAPPRM:ASME + FREQ:60HZ) + COOL:AIR **(21/08/2018 - 10/12/2018)** ((((CAPPRM:AS1210 , CAPPRM:CE , CAPPRM:MHLW , CAPPRM:MOM) + MOVOL:400V , (CAPPRM:CE + MOVOL:500V , CAPPRM:MHLW + MOVOL:200V) + COOL:AIR) + FREQ:50HZ , (CAPPRM:ASME , CAPPRM:MHLW) + FREQ:60HZ + MOVOL:460V) + CAPPRE:IEC , ((MOVOL:230V , MOVOL:575V) + COOL:AIR , MOVOL:460V) + CAPPRE:ULCUL + CAPPRM:ASME + FREQ:60HZ) **(11/12/2018 - 11/12/2018)** ((((CAPPRM:AS1210 , CAPPRM:CE , CAPPRM:MHLW , CAPPRM:MOM) + MOVOL:400V , (CAPPRM:CE + MOVOL:500V , CAPPRM:MHLW + MOVOL:200V) + COOL:AIR) + FREQ:50HZ , (CAPPRM:ASME , CAPPRM:MHLW) + COOL:WATER + FREQ:60HZ + MOVOL:460V) + CAPPRE:IEC , ((MOVOL:230V , MOVOL:575V) + COOL:AIR , MOVOL:460V) + CAPPRE:ULCUL + CAPPRM:ASME + FREQ:60HZ)	1X6
	1088 0037 69	3	CONNECTOR	**(20/07/2017 - 20/08/2018)** ((((CAPPRM:AS1210 , CAPPRM:CE , CAPPRM:MHLW , CAPPRM:MOM) + MOVOL:400V , CAPPRM:CE + MOVOL:500V , CAPPRM:MHLW + MOVOL:200V) + FREQ:50HZ , (CAPPRM:ASME , CAPPRM:MHLW) + FREQ:60HZ + MOVOL:460V) + CAPPRE:IEC , (MOVOL:230V , MOVOL:460V , MOVOL:575V) + CAPPRE:ULCUL + CAPPRM:ASME + FREQ:60HZ) + COOL:AIR **(21/08/2018 - 10/12/2018)** ((((CAPPRM:AS1210 , CAPPRM:CE , CAPPRM:MHLW , CAPPRM:MOM) + MOVOL:400V , (CAPPRM:CE + MOVOL:500V , CAPPRM:MHLW + MOVOL:200V) + COOL:AIR) + FREQ:50HZ , (CAPPRM:ASME , CAPPRM:MHLW) + FREQ:60HZ + MOVOL:460V) + CAPPRE:IEC , ((MOVOL:230V , MOVOL:575V) + COOL:AIR , MOVOL:460V) + CAPPRE:ULCUL + CAPPRM:ASME + FREQ:60HZ) **(11/12/2018 - 11/12/2018)** ((((CAPPRM:AS1210 , CAPPRM:CE , CAPPRM:MHLW , CAPPRM:MOM) + MOVOL:400V , (CAPPRM:CE + MOVOL:500V , CAPPRM:MHLW + MOVOL:200V) + COOL:AIR) + FREQ:50HZ , (CAPPRM:ASME , CAPPRM:MHLW) + COOL:WATER + FREQ:60HZ + MOVOL:460V) + CAPPRE:IEC , ((MOVOL:230V , MOVOL:575V) + COOL:AIR , MOVOL:460V) + CAPPRE:ULCUL + CAPPRM:ASME + FREQ:60HZ)	1X7

Legend:

CAPPRE:IEC - Component approval electrical:IEC
CAPPRM:ASME - Component approval mechanical:ASME
CAPPRM:MOM - Component approval mechanical:MOM
FREQ:50HZ - Frequency:50 Hz
MODEL:GA110VP_16 - Model:GA 110VSD+
MOVOL:400V - Supply voltage:400 V
MOVOL:575V - Supply voltage:575 V
CAPPRE:ULCUL - Component approval electrical:UL/cUL
CAPPRM:CE - Component approval mechanical:CE
COOL:AIR - Cooling:Air cooled
FREQ:60HZ - Frequency:60 Hz
MOVOL:200V - Supply voltage:200 V
MOVOL:460V - Supply voltage:460 V
CAPPRM:AS1210 - Component approval mechanical:AS1210
CAPPRM:MHLW - Component approval mechanical:MHLW
COOL:WATER - Cooling:Water cooled
IDRY:Y - Integrated dryer:Yes
MOVOL:230V - Supply voltage:230 V
MOVOL:500V - Supply voltage:500 V

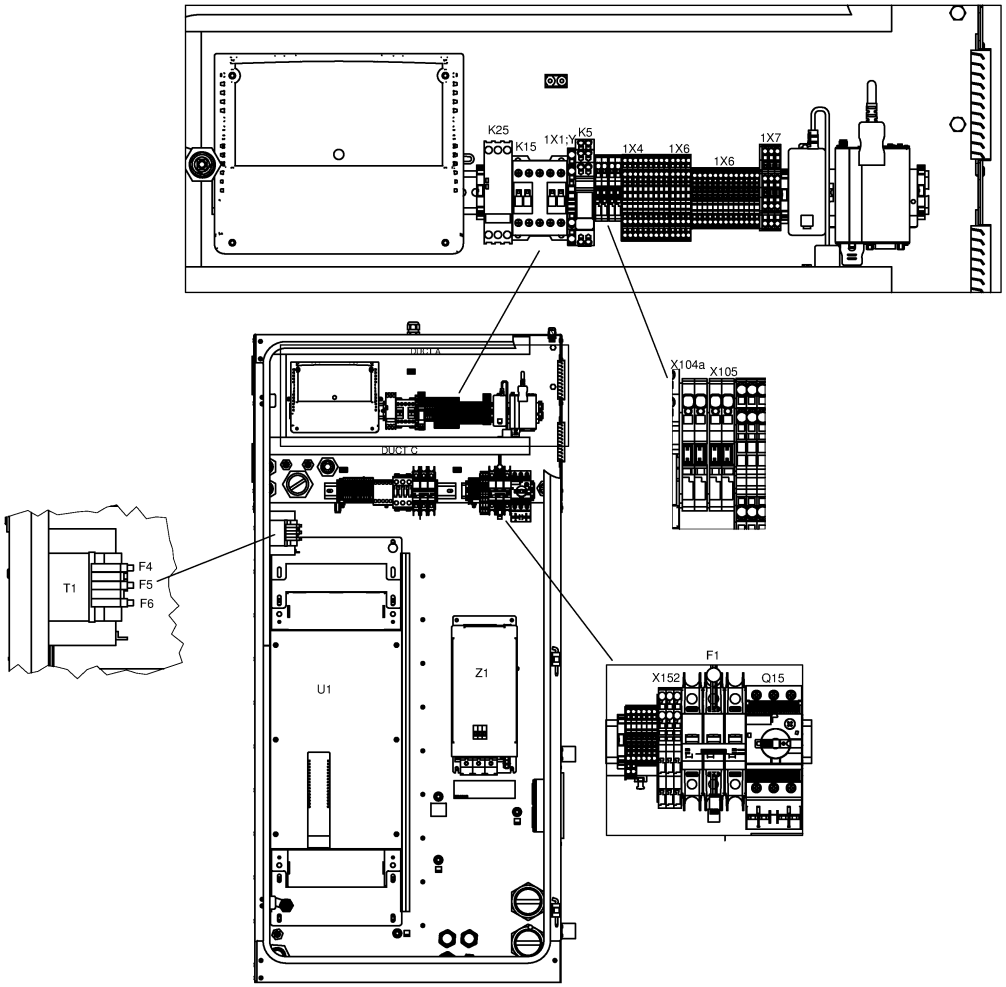
K25
K15
1X1:Y
K5
1X4
1X6
1X6
1X7
X104a
X105
DUCT A
DUCT C
T1
F4
F5
F6
U1
Z1
F1
X152
Q15

21.26 - Cubicle components GA 110 VSD+ - (200V-400V-500V/50Hz, 460V/60Hz - IEC, 230V-460V-575V/60Hz - UL-cUL) - Full-Feature (20/07/2017 - 11/12/2018)

(((MOVOL:200V , MOVOL:400V , MOVOL:500V) + FREQ:50HZ , FREQ:60HZ + MOVOL:460V) + CAPPRE:IEC , (MOVOL:230V , MOVOL:460V , MOVOL:575V) + CAPPRE:ULCUL + FREQ:60HZ) + IDRY:Y + MODEL:GA110VP_16

Ref	Part Number	Qty	Name	Validity	EL
	1088 0039 35	1	PLATE	**(20/07/2017 - 20/08/2018)** ((((CAPPRM:AS1210 , CAPPRM:CE , CAPPRM:MHLW , CAPPRM:MOM) + MOVOL:400V , CAPPRM:CE + MOVOL:500V , CAPPRM:MHLW + MOVOL:200V) + FREQ:50HZ , (CAPPRM:ASME , CAPPRM:MHLW) + FREQ:60HZ + MOVOL:460V) + CAPPRE:IEC , (MOVOL:230V , MOVOL:460V , MOVOL:575V) + CAPPRE:ULCUL + CAPPRM:ASME + FREQ:60HZ) + COOL:AIR **(21/08/2018 - 10/12/2018)** ((((CAPPRM:AS1210 , CAPPRM:CE , CAPPRM:MHLW , CAPPRM:MOM) + MOVOL:400V , (CAPPRM:CE + MOVOL:500V , CAPPRM:MHLW + MOVOL:200V) + COOL:AIR) + FREQ:50HZ , (CAPPRM:ASME , CAPPRM:MHLW) + FREQ:60HZ + MOVOL:460V) + CAPPRE:IEC , ((MOVOL:230V , MOVOL:575V) + COOL:AIR , MOVOL:460V) + CAPPRE:ULCUL + CAPPRM:ASME + FREQ:60HZ) **(11/12/2018 - 11/12/2018)** ((((CAPPRM:AS1210 , CAPPRM:CE , CAPPRM:MHLW , CAPPRM:MOM) + MOVOL:400V , (CAPPRM:CE + MOVOL:500V , CAPPRM:MHLW + MOVOL:200V) + COOL:AIR) + FREQ:50HZ , (CAPPRM:ASME , CAPPRM:MHLW) + COOL:WATER + FREQ:60HZ + MOVOL:460V) + CAPPRE:IEC , ((MOVOL:230V , MOVOL:575V) + COOL:AIR , MOVOL:460V) + CAPPRE:ULCUL + CAPPRM:ASME + FREQ:60HZ)	1X6
	1088 0040 37	1	END PLATE	**(20/07/2017 - 20/08/2018)** ((((CAPPRM:AS1210 , CAPPRM:CE , CAPPRM:MHLW , CAPPRM:MOM) + MOVOL:400V , CAPPRM:CE + MOVOL:500V , CAPPRM:MHLW + MOVOL:200V) + FREQ:50HZ , (CAPPRM:ASME , CAPPRM:MHLW) + FREQ:60HZ + MOVOL:460V) + CAPPRE:IEC , (MOVOL:230V , MOVOL:460V , MOVOL:575V) + CAPPRE:ULCUL + CAPPRM:ASME + FREQ:60HZ) + COOL:AIR **(21/08/2018 - 10/12/2018)** ((((CAPPRM:AS1210 , CAPPRM:CE , CAPPRM:MHLW , CAPPRM:MOM) + MOVOL:400V , (CAPPRM:CE + MOVOL:500V , CAPPRM:MHLW + MOVOL:200V) + COOL:AIR) + FREQ:50HZ , (CAPPRM:ASME , CAPPRM:MHLW) + FREQ:60HZ + MOVOL:460V) + CAPPRE:IEC , ((MOVOL:230V , MOVOL:575V) + COOL:AIR , MOVOL:460V) + CAPPRE:ULCUL + CAPPRM:ASME + FREQ:60HZ) **(11/12/2018 - 11/12/2018)** ((((CAPPRM:AS1210 , CAPPRM:CE , CAPPRM:MHLW , CAPPRM:MOM) + MOVOL:400V , (CAPPRM:CE + MOVOL:500V , CAPPRM:MHLW + MOVOL:200V) + COOL:AIR) + FREQ:50HZ , (CAPPRM:ASME , CAPPRM:MHLW) + COOL:WATER + FREQ:60HZ + MOVOL:460V) + CAPPRE:IEC , ((MOVOL:230V , MOVOL:575V) + COOL:AIR , MOVOL:460V) + CAPPRE:ULCUL + CAPPRM:ASME + FREQ:60HZ)	1X7

Legend:

CAPPRE:IEC - Component approval electrical:IEC
CAPPRM:ASME - Component approval mechanical:ASME
CAPPRM:MOM - Component approval mechanical:MOM
FREQ:50HZ - Frequency:50 Hz
MODEL:GA110VP_16 - Model:GA 110VSD+
MOVOL:400V - Supply voltage:400 V
MOVOL:575V - Supply voltage:575 V
CAPPRE:ULCUL - Component approval electrical:UL/cUL
CAPPRM:CE - Component approval mechanical:CE
COOL:AIR - Cooling:Air cooled
FREQ:60HZ - Frequency:60 Hz
MOVOL:200V - Supply voltage:200 V
MOVOL:460V - Supply voltage:460 V
CAPPRM:AS1210 - Component approval mechanical:AS1210
CAPPRM:MHLW - Component approval mechanical:MHLW
COOL:WATER - Cooling:Water cooled
IDRY:Y - Integrated dryer:Yes
MOVOL:230V - Supply voltage:230 V
MOVOL:500V - Supply voltage:500 V

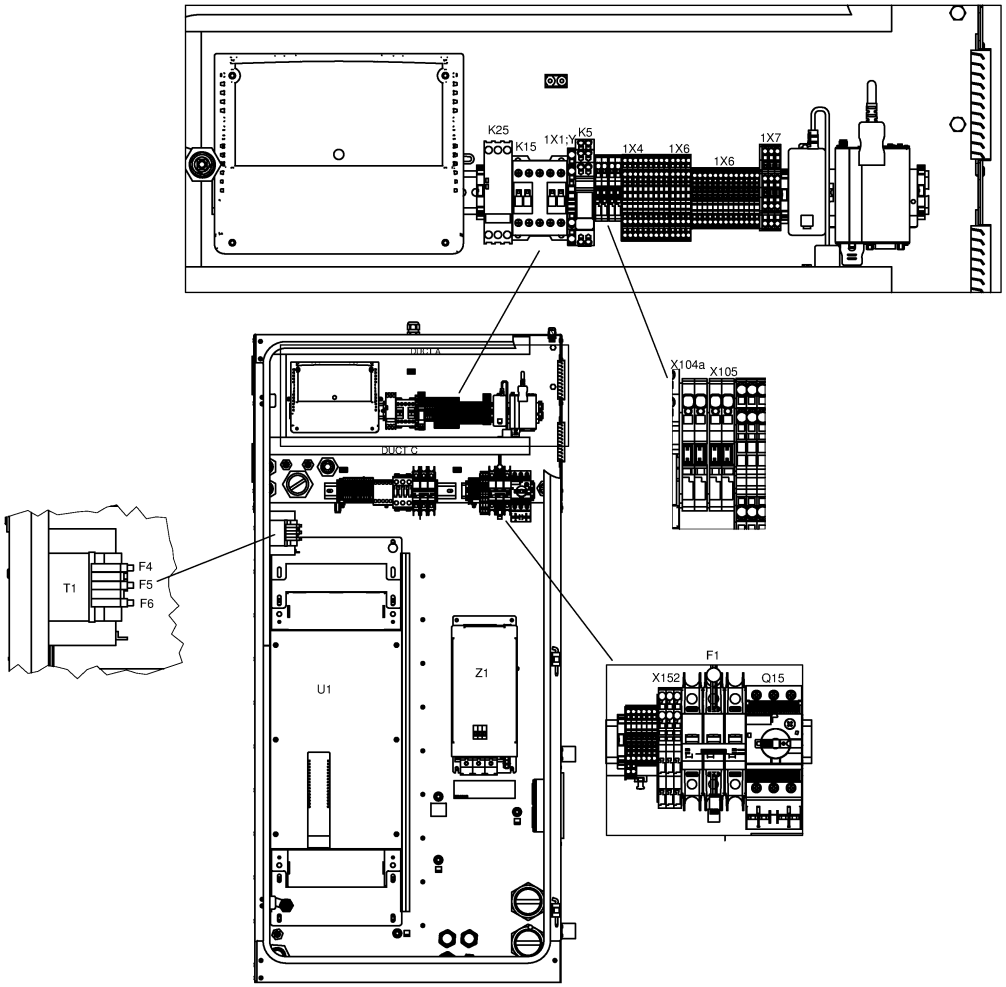
K25
K15
1X1:Y
K5
1X4
1X6
1X6
1X7
X104a
X105
DUCT A
DUCT C
T1
F4
F5
F6
U1
Z1
F1
X152
Q15

21.26 - Cubicle components GA 110 VSD+ - (200V-400V-500V/50Hz, 460V/60Hz - IEC, 230V-460V-575V/60Hz - UL-cUL) - Full-Feature (20/07/2017 - 11/12/2018)

(((MOVOL:200V , MOVOL:400V , MOVOL:500V) + FREQ:50HZ , FREQ:60HZ + MOVOL:460V) + CAPPRE:IEC , (MOVOL:230V , MOVOL:460V , MOVOL:575V) + CAPPRE:ULCUL + FREQ:60HZ) + IDRY:Y + MODEL:GA110VP_16

Ref	Part Number	Qty	Name	Validity	EL
	1088 0039 36	9	TERMINAL	**(20/07/2017 - 20/08/2018)** ((((CAPPRM:AS1210 , CAPPRM:CE , CAPPRM:MHLW , CAPPRM:MOM) + MOVOL:400V , CAPPRM:CE + MOVOL:500V , CAPPRM:MHLW + MOVOL:200V) + FREQ:50HZ , (CAPPRM:ASME , CAPPRM:MHLW) + FREQ:60HZ + MOVOL:460V) + CAPPRE:IEC , (MOVOL:230V , MOVOL:460V , MOVOL:575V) + CAPPRE:ULCUL + CAPPRM:ASME + FREQ:60HZ) + COOL:AIR **(21/08/2018 - 10/12/2018)** ((((CAPPRM:AS1210 , CAPPRM:CE , CAPPRM:MHLW , CAPPRM:MOM) + MOVOL:400V , (CAPPRM:CE + MOVOL:500V , CAPPRM:MHLW + MOVOL:200V) + COOL:AIR) + FREQ:50HZ , (CAPPRM:ASME , CAPPRM:MHLW) + FREQ:60HZ + MOVOL:460V) + CAPPRE:IEC , ((MOVOL:230V , MOVOL:575V) + COOL:AIR , MOVOL:460V) + CAPPRE:ULCUL + CAPPRM:ASME + FREQ:60HZ) **(11/12/2018 - 11/12/2018)** ((((CAPPRM:AS1210 , CAPPRM:CE , CAPPRM:MHLW , CAPPRM:MOM) + MOVOL:400V , (CAPPRM:CE + MOVOL:500V , CAPPRM:MHLW + MOVOL:200V) + COOL:AIR) + FREQ:50HZ , (CAPPRM:ASME , CAPPRM:MHLW) + COOL:WATER + FREQ:60HZ + MOVOL:460V) + CAPPRE:IEC , ((MOVOL:230V , MOVOL:575V) + COOL:AIR , MOVOL:460V) + CAPPRE:ULCUL + CAPPRM:ASME + FREQ:60HZ)	1X4
	1088 0039 36	4	TERMINAL	**(20/07/2017 - 20/08/2018)** ((((CAPPRM:AS1210 , CAPPRM:CE , CAPPRM:MHLW , CAPPRM:MOM) + MOVOL:400V , CAPPRM:CE + MOVOL:500V , CAPPRM:MHLW + MOVOL:200V) + FREQ:50HZ , (CAPPRM:ASME , CAPPRM:MHLW) + FREQ:60HZ + MOVOL:460V) + CAPPRE:IEC , (MOVOL:230V , MOVOL:460V , MOVOL:575V) + CAPPRE:ULCUL + CAPPRM:ASME + FREQ:60HZ) + COOL:AIR **(21/08/2018 - 10/12/2018)** ((((CAPPRM:AS1210 , CAPPRM:CE , CAPPRM:MHLW , CAPPRM:MOM) + MOVOL:400V , (CAPPRM:CE + MOVOL:500V , CAPPRM:MHLW + MOVOL:200V) + COOL:AIR) + FREQ:50HZ , (CAPPRM:ASME , CAPPRM:MHLW) + FREQ:60HZ + MOVOL:460V) + CAPPRE:IEC , ((MOVOL:230V , MOVOL:575V) + COOL:AIR , MOVOL:460V) + CAPPRE:ULCUL + CAPPRM:ASME + FREQ:60HZ) **(11/12/2018 - 11/12/2018)** ((((CAPPRM:AS1210 , CAPPRM:CE , CAPPRM:MHLW , CAPPRM:MOM) + MOVOL:400V , (CAPPRM:CE + MOVOL:500V , CAPPRM:MHLW + MOVOL:200V) + COOL:AIR) + FREQ:50HZ , (CAPPRM:ASME , CAPPRM:MHLW) + COOL:WATER + FREQ:60HZ + MOVOL:460V) + CAPPRE:IEC , ((MOVOL:230V , MOVOL:575V) + COOL:AIR , MOVOL:460V) + CAPPRE:ULCUL + CAPPRM:ASME + FREQ:60HZ)	1X6

Legend:

CAPPRE:IEC - Component approval electrical:IEC
CAPPRM:ASME - Component approval mechanical:ASME
CAPPRM:MOM - Component approval mechanical:MOM
FREQ:50HZ - Frequency:50 Hz
MODEL:GA110VP_16 - Model:GA 110VSD+
MOVOL:400V - Supply voltage:400 V
MOVOL:575V - Supply voltage:575 V
CAPPRE:ULCUL - Component approval electrical:UL/cUL
CAPPRM:CE - Component approval mechanical:CE
COOL:AIR - Cooling:Air cooled
FREQ:60HZ - Frequency:60 Hz
MOVOL:200V - Supply voltage:200 V
MOVOL:460V - Supply voltage:460 V
CAPPRM:AS1210 - Component approval mechanical:AS1210
CAPPRM:MHLW - Component approval mechanical:MHLW
COOL:WATER - Cooling:Water cooled
IDRY:Y - Integrated dryer:Yes
MOVOL:230V - Supply voltage:230 V
MOVOL:500V - Supply voltage:500 V

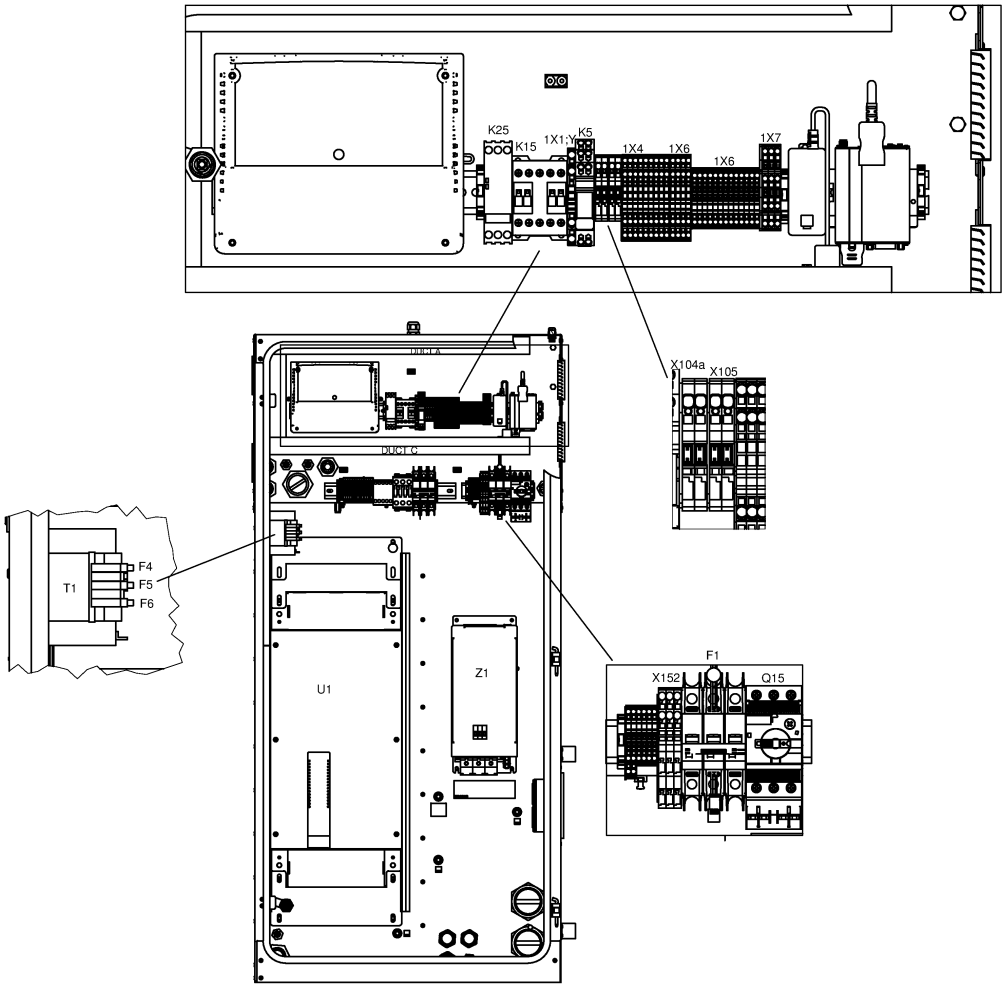
K25
K15
1X1:Y
K5
1X4
1X6
1X6
1X7
X104a
X105
DUCT A
DUCT C
T1
F4
F5
F6
U1
Z1
F1
X152
Q15

21.26 - Cubicle components GA 110 VSD+ - (200V-400V-500V/50Hz, 460V/60Hz - IEC, 230V-460V-575V/60Hz - UL-cUL) - Full-Feature (20/07/2017 - 11/12/2018)

(((MOVOL:200V , MOVOL:400V , MOVOL:500V) + FREQ:50HZ , FREQ:60HZ + MOVOL:460V) + CAPPRE:IEC , (MOVOL:230V , MOVOL:460V , MOVOL:575V) + CAPPRE:ULCUL + FREQ:60HZ) + IDRY:Y + MODEL:GA110VP_16

Ref	Part Number	Qty	Name	Validity	EL
	1088 0039 37	1	END PLATE	**(20/07/2017 - 20/08/2018)** ((((CAPPRM:AS1210 , CAPPRM:CE , CAPPRM:MHLW , CAPPRM:MOM) + MOVOL:400V , CAPPRM:CE + MOVOL:500V , CAPPRM:MHLW + MOVOL:200V) + FREQ:50HZ , (CAPPRM:ASME , CAPPRM:MHLW) + FREQ:60HZ + MOVOL:460V) + CAPPRE:IEC , (MOVOL:230V , MOVOL:460V , MOVOL:575V) + CAPPRE:ULCUL + CAPPRM:ASME + FREQ:60HZ) + COOL:AIR **(21/08/2018 - 10/12/2018)** ((((CAPPRM:AS1210 , CAPPRM:CE , CAPPRM:MHLW , CAPPRM:MOM) + MOVOL:400V , (CAPPRM:CE + MOVOL:500V , CAPPRM:MHLW + MOVOL:200V) + COOL:AIR) + FREQ:50HZ , (CAPPRM:ASME , CAPPRM:MHLW) + FREQ:60HZ + MOVOL:460V) + CAPPRE:IEC , ((MOVOL:230V , MOVOL:575V) + COOL:AIR , MOVOL:460V) + CAPPRE:ULCUL + CAPPRM:ASME + FREQ:60HZ) **(11/12/2018 - 11/12/2018)** ((((CAPPRM:AS1210 , CAPPRM:CE , CAPPRM:MHLW , CAPPRM:MOM) + MOVOL:400V , (CAPPRM:CE + MOVOL:500V , CAPPRM:MHLW + MOVOL:200V) + COOL:AIR) + FREQ:50HZ , (CAPPRM:ASME , CAPPRM:MHLW) + COOL:WATER + FREQ:60HZ + MOVOL:460V) + CAPPRE:IEC , ((MOVOL:230V , MOVOL:575V) + COOL:AIR , MOVOL:460V) + CAPPRE:ULCUL + CAPPRM:ASME + FREQ:60HZ)	1X4
	1088 0039 37	1	END PLATE	**(20/07/2017 - 20/08/2018)** ((((CAPPRM:AS1210 , CAPPRM:CE , CAPPRM:MHLW , CAPPRM:MOM) + MOVOL:400V , CAPPRM:CE + MOVOL:500V , CAPPRM:MHLW + MOVOL:200V) + FREQ:50HZ , (CAPPRM:ASME , CAPPRM:MHLW) + FREQ:60HZ + MOVOL:460V) + CAPPRE:IEC , (MOVOL:230V , MOVOL:460V , MOVOL:575V) + CAPPRE:ULCUL + CAPPRM:ASME + FREQ:60HZ) + COOL:AIR **(21/08/2018 - 10/12/2018)** ((((CAPPRM:AS1210 , CAPPRM:CE , CAPPRM:MHLW , CAPPRM:MOM) + MOVOL:400V , (CAPPRM:CE + MOVOL:500V , CAPPRM:MHLW + MOVOL:200V) + COOL:AIR) + FREQ:50HZ , (CAPPRM:ASME , CAPPRM:MHLW) + FREQ:60HZ + MOVOL:460V) + CAPPRE:IEC , ((MOVOL:230V , MOVOL:575V) + COOL:AIR , MOVOL:460V) + CAPPRE:ULCUL + CAPPRM:ASME + FREQ:60HZ) **(11/12/2018 - 11/12/2018)** ((((CAPPRM:AS1210 , CAPPRM:CE , CAPPRM:MHLW , CAPPRM:MOM) + MOVOL:400V , (CAPPRM:CE + MOVOL:500V , CAPPRM:MHLW + MOVOL:200V) + COOL:AIR) + FREQ:50HZ , (CAPPRM:ASME , CAPPRM:MHLW) + COOL:WATER + FREQ:60HZ + MOVOL:460V) + CAPPRE:IEC , ((MOVOL:230V , MOVOL:575V) + COOL:AIR , MOVOL:460V) + CAPPRE:ULCUL + CAPPRM:ASME + FREQ:60HZ)	1X6

Legend:

CAPPRE:IEC - Component approval electrical:IEC
CAPPRM:ASME - Component approval mechanical:ASME
CAPPRM:MOM - Component approval mechanical:MOM
FREQ:50HZ - Frequency:50 Hz
MODEL:GA110VP_16 - Model:GA 110VSD+
MOVOL:400V - Supply voltage:400 V
MOVOL:575V - Supply voltage:575 V
CAPPRE:ULCUL - Component approval electrical:UL/cUL
CAPPRM:CE - Component approval mechanical:CE
COOL:AIR - Cooling:Air cooled
FREQ:60HZ - Frequency:60 Hz
MOVOL:200V - Supply voltage:200 V
MOVOL:460V - Supply voltage:460 V
CAPPRM:AS1210 - Component approval mechanical:AS1210
CAPPRM:MHLW - Component approval mechanical:MHLW
COOL:WATER - Cooling:Water cooled
IDRY:Y - Integrated dryer:Yes
MOVOL:230V - Supply voltage:230 V
MOVOL:500V - Supply voltage:500 V

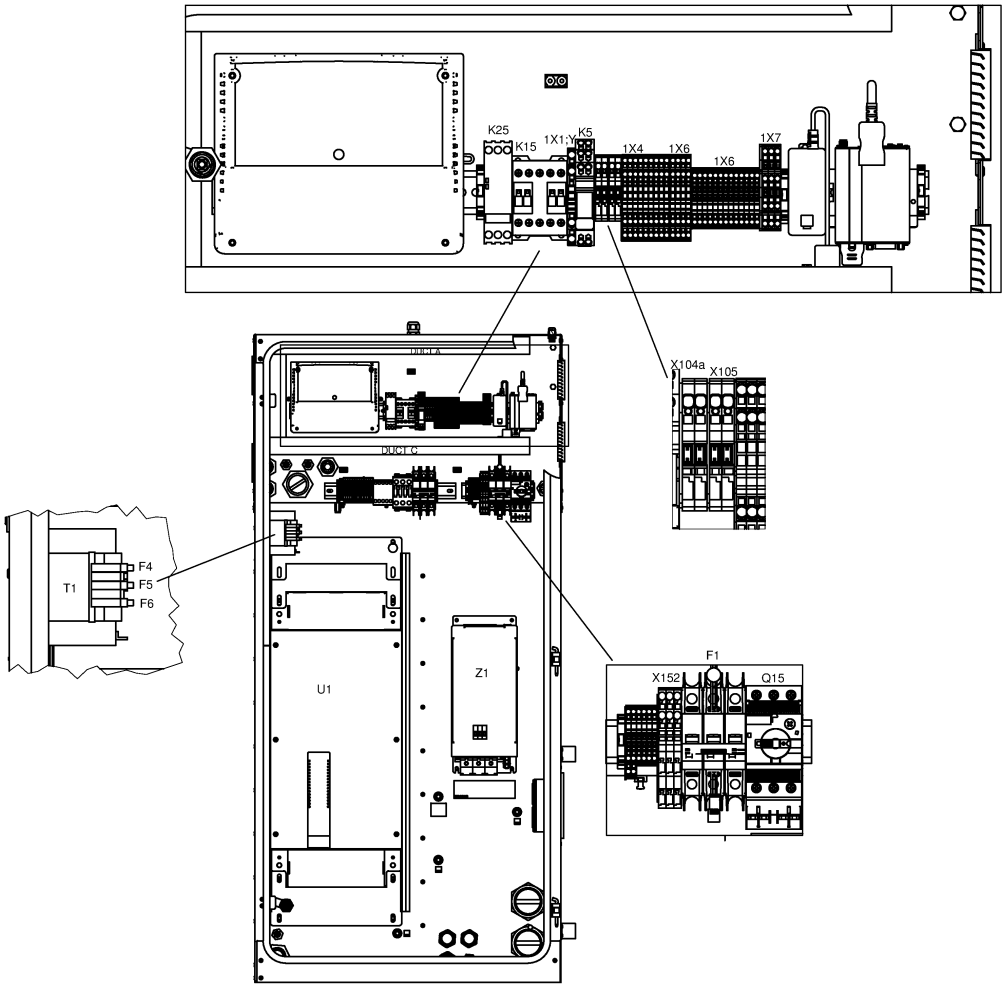
K25
K15
1X1:Y
K5
1X4
1X6
1X6
1X7
X104a
X105
DUCT A
DUCT C
T1
F4
F5
F6
U1
Z1
F1
X152
Q15

21.26 - Cubicle components GA 110 VSD+ - (200V-400V-500V/50Hz, 460V/60Hz - IEC, 230V-460V-575V/60Hz - UL-cUL) - Full-Feature (20/07/2017 - 11/12/2018)

(((MOVOL:200V , MOVOL:400V , MOVOL:500V) + FREQ:50HZ , FREQ:60HZ + MOVOL:460V) + CAPPRE:IEC , (MOVOL:230V , MOVOL:460V , MOVOL:575V) + CAPPRE:ULCUL + FREQ:60HZ) + IDRY:Y + MODEL:GA110VP_16

Ref	Part Number	Qty	Name	Validity	EL
	1088 0039 37	1	END PLATE	**(20/07/2017 - 20/08/2018)** ((((CAPPRM:AS1210 , CAPPRM:CE , CAPPRM:MHLW , CAPPRM:MOM) + MOVOL:400V , CAPPRM:CE + MOVOL:500V , CAPPRM:MHLW + MOVOL:200V) + FREQ:50HZ , (CAPPRM:ASME , CAPPRM:MHLW) + FREQ:60HZ + MOVOL:460V) + CAPPRE:IEC , (MOVOL:230V , MOVOL:460V , MOVOL:575V) + CAPPRE:ULCUL + CAPPRM:ASME + FREQ:60HZ) + COOL:AIR **(21/08/2018 - 10/12/2018)** ((((CAPPRM:AS1210 , CAPPRM:CE , CAPPRM:MHLW , CAPPRM:MOM) + MOVOL:400V , (CAPPRM:CE + MOVOL:500V , CAPPRM:MHLW + MOVOL:200V) + COOL:AIR) + FREQ:50HZ , (CAPPRM:ASME , CAPPRM:MHLW) + FREQ:60HZ + MOVOL:460V) + CAPPRE:IEC , ((MOVOL:230V , MOVOL:575V) + COOL:AIR , MOVOL:460V) + CAPPRE:ULCUL + CAPPRM:ASME + FREQ:60HZ) **(11/12/2018 - 11/12/2018)** ((((CAPPRM:AS1210 , CAPPRM:CE , CAPPRM:MHLW , CAPPRM:MOM) + MOVOL:400V , (CAPPRM:CE + MOVOL:500V , CAPPRM:MHLW + MOVOL:200V) + COOL:AIR) + FREQ:50HZ , (CAPPRM:ASME , CAPPRM:MHLW) + COOL:WATER + FREQ:60HZ + MOVOL:460V) + CAPPRE:IEC , ((MOVOL:230V , MOVOL:575V) + COOL:AIR , MOVOL:460V) + CAPPRE:ULCUL + CAPPRM:ASME + FREQ:60HZ)	1X1:Y/D
	1088 0037 81	1	CONNECTOR	**(20/07/2017 - 20/08/2018)** ((((CAPPRM:AS1210 , CAPPRM:CE , CAPPRM:MHLW , CAPPRM:MOM) + MOVOL:400V , CAPPRM:CE + MOVOL:500V , CAPPRM:MHLW + MOVOL:200V) + FREQ:50HZ , (CAPPRM:ASME , CAPPRM:MHLW) + FREQ:60HZ + MOVOL:460V) + CAPPRE:IEC , (MOVOL:230V , MOVOL:460V , MOVOL:575V) + CAPPRE:ULCUL + CAPPRM:ASME + FREQ:60HZ) + COOL:AIR **(21/08/2018 - 10/12/2018)** ((((CAPPRM:AS1210 , CAPPRM:CE , CAPPRM:MHLW , CAPPRM:MOM) + MOVOL:400V , (CAPPRM:CE + MOVOL:500V , CAPPRM:MHLW + MOVOL:200V) + COOL:AIR) + FREQ:50HZ , (CAPPRM:ASME , CAPPRM:MHLW) + FREQ:60HZ + MOVOL:460V) + CAPPRE:IEC , ((MOVOL:230V , MOVOL:575V) + COOL:AIR , MOVOL:460V) + CAPPRE:ULCUL + CAPPRM:ASME + FREQ:60HZ) **(11/12/2018 - 11/12/2018)** ((((CAPPRM:AS1210 , CAPPRM:CE , CAPPRM:MHLW , CAPPRM:MOM) + MOVOL:400V , (CAPPRM:CE + MOVOL:500V , CAPPRM:MHLW + MOVOL:200V) + COOL:AIR) + FREQ:50HZ , (CAPPRM:ASME , CAPPRM:MHLW) + COOL:WATER + FREQ:60HZ + MOVOL:460V) + CAPPRE:IEC , ((MOVOL:230V , MOVOL:575V) + COOL:AIR , MOVOL:460V) + CAPPRE:ULCUL + CAPPRM:ASME + FREQ:60HZ)	2X27

Legend:

CAPPRE:IEC - Component approval electrical:IEC
CAPPRM:ASME - Component approval mechanical:ASME
CAPPRM:MOM - Component approval mechanical:MOM
FREQ:50HZ - Frequency:50 Hz
MODEL:GA110VP_16 - Model:GA 110VSD+
MOVOL:400V - Supply voltage:400 V
MOVOL:575V - Supply voltage:575 V
CAPPRE:ULCUL - Component approval electrical:UL/cUL
CAPPRM:CE - Component approval mechanical:CE
COOL:AIR - Cooling:Air cooled
FREQ:60HZ - Frequency:60 Hz
MOVOL:200V - Supply voltage:200 V
MOVOL:460V - Supply voltage:460 V
CAPPRM:AS1210 - Component approval mechanical:AS1210
CAPPRM:MHLW - Component approval mechanical:MHLW
COOL:WATER - Cooling:Water cooled
IDRY:Y - Integrated dryer:Yes
MOVOL:230V - Supply voltage:230 V
MOVOL:500V - Supply voltage:500 V

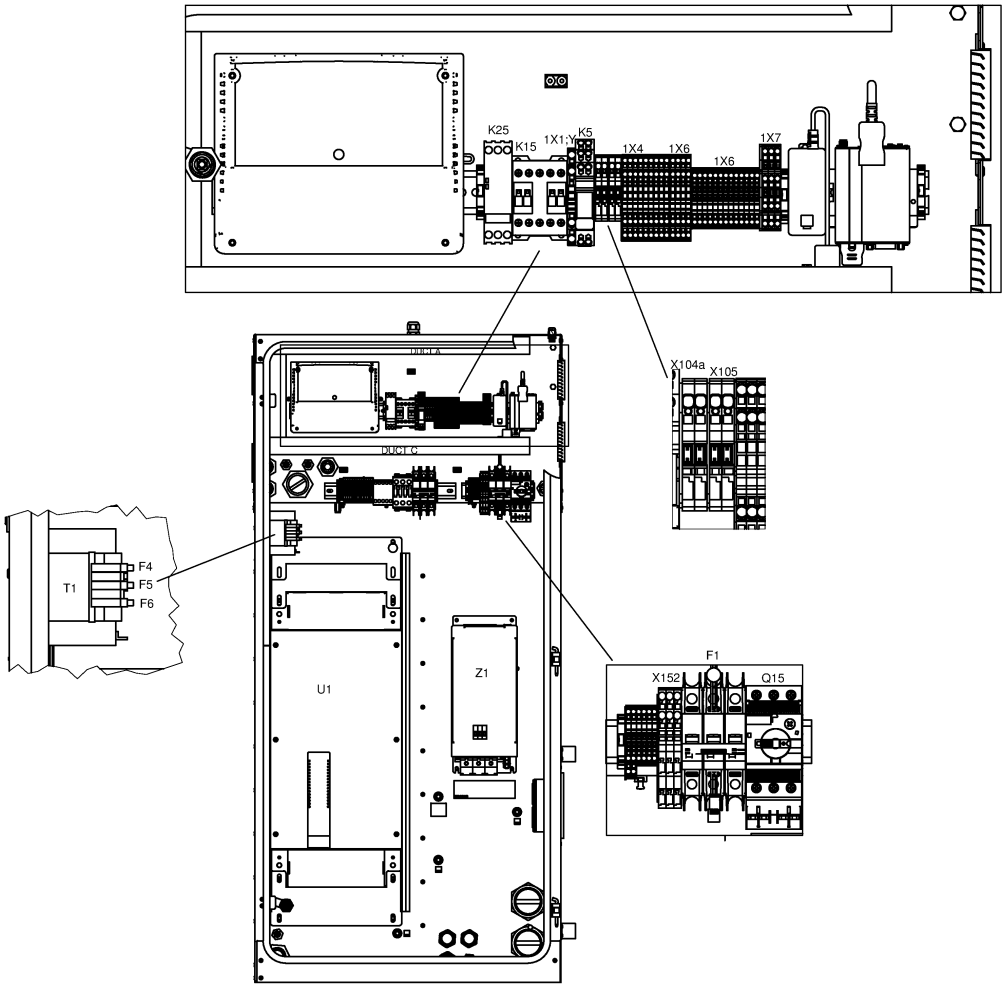
K25
K15
1X1:Y
K5
1X4
1X6
1X6
1X7
DUCT A
DUCT C
X104a
X105
T1
F4
F5
F6
U1
Z1
F1
X152
Q15

21.26 - Cubicle components GA 110 VSD+ - (200V-400V-500V/50Hz, 460V/60Hz - IEC, 230V-460V-575V/60Hz - UL-cUL) - Full-Feature (20/07/2017 - 11/12/2018)

(((MOVOL:200V , MOVOL:400V , MOVOL:500V) + FREQ:50HZ , FREQ:60HZ + MOVOL:460V) + CAPPRE:IEC , (MOVOL:230V , MOVOL:460V , MOVOL:575V) + CAPPRE:ULCUL + FREQ:60HZ) + IDRY:Y + MODEL:GA110VP_16

Ref	Part Number	Qty	Name	Validity	EL
	1088 0037 80	1	CONNECTOR	**(20/07/2017 - 20/08/2018)** ((((CAPPRM:AS1210 , CAPPRM:CE , CAPPRM:MHLW , CAPPRM:MOM) + MOVOL:400V , CAPPRM:CE + MOVOL:500V , CAPPRM:MHLW + MOVOL:200V) + FREQ:50HZ , (CAPPRM:ASME , CAPPRM:MHLW) + FREQ:60HZ + MOVOL:460V) + CAPPRE:IEC , (MOVOL:230V , MOVOL:460V , MOVOL:575V) + CAPPRE:ULCUL + CAPPRM:ASME + FREQ:60HZ) + COOL:AIR **(21/08/2018 - 10/12/2018)** ((((CAPPRM:AS1210 , CAPPRM:CE , CAPPRM:MHLW , CAPPRM:MOM) + MOVOL:400V , (CAPPRM:CE + MOVOL:500V , CAPPRM:MHLW + MOVOL:200V) + COOL:AIR) + FREQ:50HZ , (CAPPRM:ASME , CAPPRM:MHLW) + FREQ:60HZ + MOVOL:460V) + CAPPRE:IEC , ((MOVOL:230V , MOVOL:575V) + COOL:AIR , MOVOL:460V) + CAPPRE:ULCUL + CAPPRM:ASME + FREQ:60HZ) **(11/12/2018 - 11/12/2018)** ((((CAPPRM:AS1210 , CAPPRM:CE , CAPPRM:MHLW , CAPPRM:MOM) + MOVOL:400V , (CAPPRM:CE + MOVOL:500V , CAPPRM:MHLW + MOVOL:200V) + COOL:AIR) + FREQ:50HZ , (CAPPRM:ASME , CAPPRM:MHLW) + COOL:WATER + FREQ:60HZ + MOVOL:460V) + CAPPRE:IEC , ((MOVOL:230V , MOVOL:575V) + COOL:AIR , MOVOL:460V) + CAPPRE:ULCUL + CAPPRM:ASME + FREQ:60HZ)	2X28
	1088 0031 32	1	CONNECTOR	**(20/07/2017 - 20/08/2018)** ((((CAPPRM:AS1210 , CAPPRM:CE , CAPPRM:MHLW , CAPPRM:MOM) + MOVOL:400V , CAPPRM:CE + MOVOL:500V , CAPPRM:MHLW + MOVOL:200V) + FREQ:50HZ , (CAPPRM:ASME , CAPPRM:MHLW) + FREQ:60HZ + MOVOL:460V) + CAPPRE:IEC , (MOVOL:230V , MOVOL:460V , MOVOL:575V) + CAPPRE:ULCUL + CAPPRM:ASME + FREQ:60HZ) + COOL:AIR **(21/08/2018 - 10/12/2018)** ((((CAPPRM:AS1210 , CAPPRM:CE , CAPPRM:MHLW , CAPPRM:MOM) + MOVOL:400V , (CAPPRM:CE + MOVOL:500V , CAPPRM:MHLW + MOVOL:200V) + COOL:AIR) + FREQ:50HZ , (CAPPRM:ASME , CAPPRM:MHLW) + FREQ:60HZ + MOVOL:460V) + CAPPRE:IEC , ((MOVOL:230V , MOVOL:575V) + COOL:AIR , MOVOL:460V) + CAPPRE:ULCUL + CAPPRM:ASME + FREQ:60HZ) **(11/12/2018 - 11/12/2018)** ((((CAPPRM:AS1210 , CAPPRM:CE , CAPPRM:MHLW , CAPPRM:MOM) + MOVOL:400V , (CAPPRM:CE + MOVOL:500V , CAPPRM:MHLW + MOVOL:200V) + COOL:AIR) + FREQ:50HZ , (CAPPRM:ASME , CAPPRM:MHLW) + COOL:WATER + FREQ:60HZ + MOVOL:460V) + CAPPRE:IEC , ((MOVOL:230V , MOVOL:575V) + COOL:AIR , MOVOL:460V) + CAPPRE:ULCUL + CAPPRM:ASME + FREQ:60HZ)	2X30

Legend:

CAPPRE:IEC - Component approval electrical:IEC
CAPPRM:ASME - Component approval mechanical:ASME
CAPPRM:MOM - Component approval mechanical:MOM
FREQ:50HZ - Frequency:50 Hz
MODEL:GA110VP_16 - Model:GA 110VSD+
MOVOL:400V - Supply voltage:400 V
MOVOL:575V - Supply voltage:575 V
CAPPRE:ULCUL - Component approval electrical:UL/cUL
CAPPRM:CE - Component approval mechanical:CE
COOL:AIR - Cooling:Air cooled
FREQ:60HZ - Frequency:60 Hz
MOVOL:200V - Supply voltage:200 V
MOVOL:460V - Supply voltage:460 V
CAPPRM:AS1210 - Component approval mechanical:AS1210
CAPPRM:MHLW - Component approval mechanical:MHLW
COOL:WATER - Cooling:Water cooled
IDRY:Y - Integrated dryer:Yes
MOVOL:230V - Supply voltage:230 V
MOVOL:500V - Supply voltage:500 V

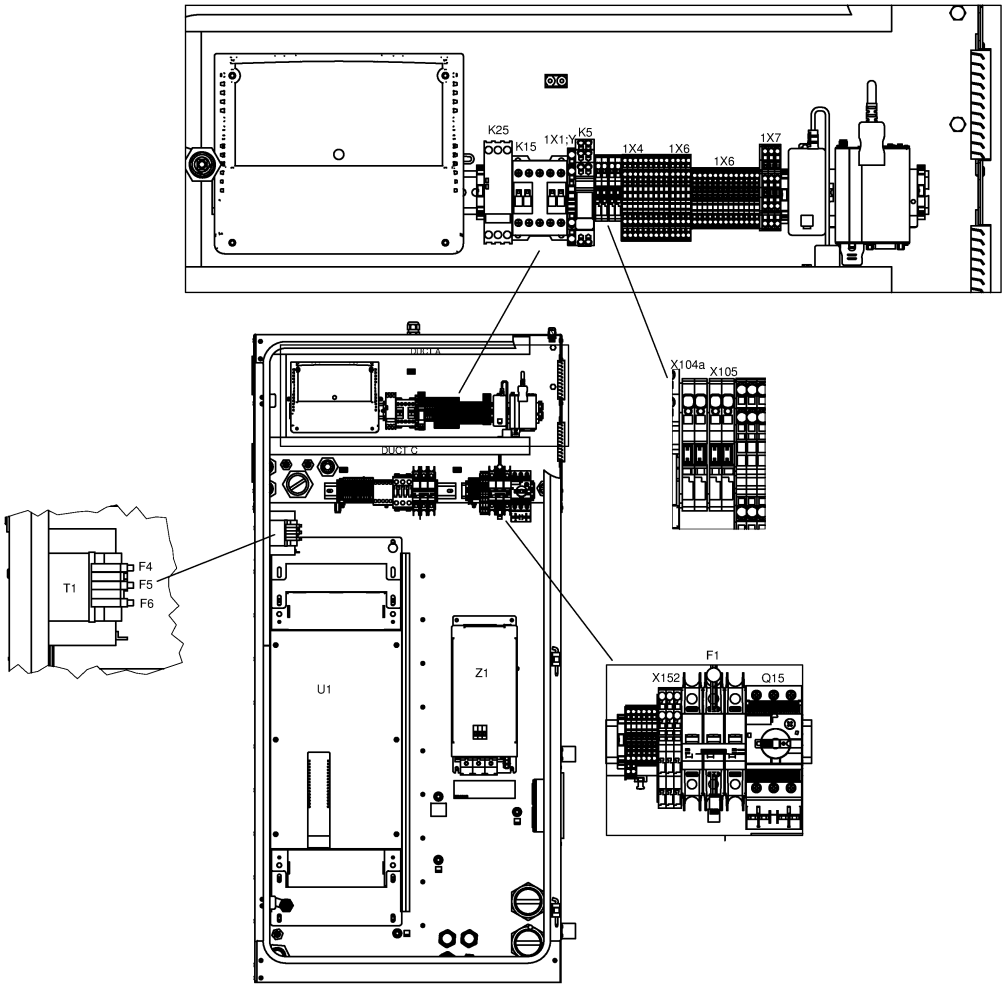
K25
K15
1X1:Y
K5
1X4
1X6
1X6
1X7
X104a
X105
DUCT A
DUCT C
T1
F4
F5
F6
U1
Z1
F1
X152
Q15

21.26 - Cubicle components GA 110 VSD+ - (200V-400V-500V/50Hz, 460V/60Hz - IEC, 230V-460V-575V/60Hz - UL-cUL) - Full-Feature (20/07/2017 - 11/12/2018)

(((MOVOL:200V , MOVOL:400V , MOVOL:500V) + FREQ:50HZ , FREQ:60HZ + MOVOL:460V) + CAPPRE:IEC , (MOVOL:230V , MOVOL:460V , MOVOL:575V) + CAPPRE:ULCUL + FREQ:60HZ) + IDRY:Y + MODEL:GA110VP_16

Ref	Part Number	Qty	Name	Validity	EL
	1088 0031 26	1	CONNECTOR 6-POLE	**(20/07/2017 - 20/08/2018)** ((((CAPPRM:AS1210 , CAPPRM:CE , CAPPRM:MHLW , CAPPRM:MOM) + MOVOL:400V , CAPPRM:CE + MOVOL:500V , CAPPRM:MHLW + MOVOL:200V) + FREQ:50HZ , (CAPPRM:ASME , CAPPRM:MHLW) + FREQ:60HZ + MOVOL:460V) + CAPPRE:IEC , (MOVOL:230V , MOVOL:460V , MOVOL:575V) + CAPPRE:ULCUL + CAPPRM:ASME + FREQ:60HZ) + COOL:AIR **(21/08/2018 - 10/12/2018)** ((((CAPPRM:AS1210 , CAPPRM:CE , CAPPRM:MHLW , CAPPRM:MOM) + MOVOL:400V , (CAPPRM:CE + MOVOL:500V , CAPPRM:MHLW + MOVOL:200V) + COOL:AIR) + FREQ:50HZ , (CAPPRM:ASME , CAPPRM:MHLW) + FREQ:60HZ + MOVOL:460V) + CAPPRE:IEC , ((MOVOL:230V , MOVOL:575V) + COOL:AIR , MOVOL:460V) + CAPPRE:ULCUL + CAPPRM:ASME + FREQ:60HZ) **(11/12/2018 - 11/12/2018)** ((((CAPPRM:AS1210 , CAPPRM:CE , CAPPRM:MHLW , CAPPRM:MOM) + MOVOL:400V , (CAPPRM:CE + MOVOL:500V , CAPPRM:MHLW + MOVOL:200V) + COOL:AIR) + FREQ:50HZ , (CAPPRM:ASME , CAPPRM:MHLW) + COOL:WATER + FREQ:60HZ + MOVOL:460V) + CAPPRE:IEC , ((MOVOL:230V , MOVOL:575V) + COOL:AIR , MOVOL:460V) + CAPPRE:ULCUL + CAPPRM:ASME + FREQ:60HZ)	2X31
	~~1089 9664 06~~	1	SWITCH	**(20/07/2017 - 20/08/2018)** ((((CAPPRM:AS1210 , CAPPRM:CE , CAPPRM:MHLW , CAPPRM:MOM) + MOVOL:400V , CAPPRM:CE + MOVOL:500V , CAPPRM:MHLW + MOVOL:200V) + FREQ:50HZ , (CAPPRM:ASME , CAPPRM:MHLW) + FREQ:60HZ + MOVOL:460V) + CAPPRE:IEC , (MOVOL:230V , MOVOL:460V , MOVOL:575V) + CAPPRE:ULCUL + CAPPRM:ASME + FREQ:60HZ) + COOL:AIR **(21/08/2018 - 10/12/2018)** ((((CAPPRM:AS1210 , CAPPRM:CE , CAPPRM:MHLW , CAPPRM:MOM) + MOVOL:400V , (CAPPRM:CE + MOVOL:500V , CAPPRM:MHLW + MOVOL:200V) + COOL:AIR) + FREQ:50HZ , (CAPPRM:ASME , CAPPRM:MHLW) + FREQ:60HZ + MOVOL:460V) + CAPPRE:IEC , ((MOVOL:230V , MOVOL:575V) + COOL:AIR , MOVOL:460V) + CAPPRE:ULCUL + CAPPRM:ASME + FREQ:60HZ) **(11/12/2018 - 11/12/2018)** ((((CAPPRM:AS1210 , CAPPRM:CE , CAPPRM:MHLW , CAPPRM:MOM) + MOVOL:400V , (CAPPRM:CE + MOVOL:500V , CAPPRM:MHLW + MOVOL:200V) + COOL:AIR) + FREQ:50HZ , (CAPPRM:ASME , CAPPRM:MHLW) + COOL:WATER + FREQ:60HZ + MOVOL:460V) + CAPPRE:IEC , ((MOVOL:230V , MOVOL:575V) + COOL:AIR , MOVOL:460V) + CAPPRE:ULCUL + CAPPRM:ASME + FREQ:60HZ)	Q15
	Substituted by:	1089 9551 97 - AUX.CONTACT CIRCUIT BREAKER (quantity: 1)			

Legend:

CAPPRE:IEC - Component approval electrical:IEC
CAPPRE:ULCUL - Component approval electrical:UL/cUL
CAPPRM:AS1210 - Component approval mechanical:AS1210
CAPPRM:ASME - Component approval mechanical:ASME
CAPPRM:CE - Component approval mechanical:CE
CAPPRM:MHLW - Component approval mechanical:MHLW
CAPPRM:MOM - Component approval mechanical:MOM
COOL:AIR - Cooling:Air cooled
COOL:WATER - Cooling:Water cooled
FREQ:50HZ - Frequency:50 Hz
FREQ:60HZ - Frequency:60 Hz
IDRY:Y - Integrated dryer:Yes
MODEL:GA110VP_16 - Model:GA 110VSD+
MOVOL:200V - Supply voltage:200 V
MOVOL:230V - Supply voltage:230 V
MOVOL:400V - Supply voltage:400 V
MOVOL:460V - Supply voltage:460 V
MOVOL:500V - Supply voltage:500 V
MOVOL:575V - Supply voltage:575 V

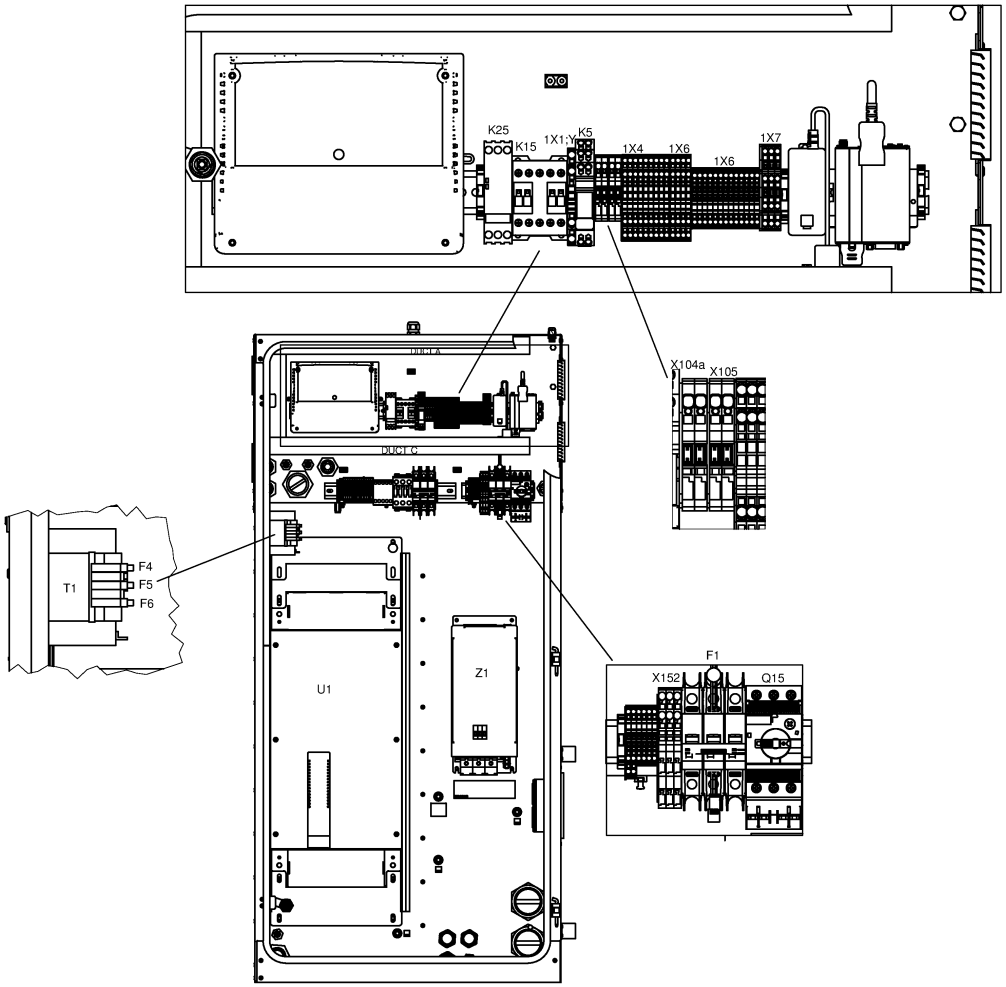
K25
K15
1X1:Y
K5
1X4
1X6
1X6
1X7
X104a
X105
DUCT A
DUCT C
T1
F4
F5
F6
U1
Z1
F1
X152
Q15

21.26 - Cubicle components GA 110 VSD+ - (200V-400V-500V/50Hz, 460V/60Hz - IEC, 230V-460V-575V/60Hz - UL-cUL) - Full-Feature (20/07/2017 - 11/12/2018)

(((MOVOL:200V , MOVOL:400V , MOVOL:500V) + FREQ:50HZ , FREQ:60HZ + MOVOL:460V) + CAPPRE:IEC , (MOVOL:230V , MOVOL:460V , MOVOL:575V) + CAPPRE:ULCUL + FREQ:60HZ) + IDRY:Y + MODEL:GA110VP_16

Ref	Part Number	Qty	Name	Validity	EL
	1089 9551 19	1	CIRCUIT BREAKER	**(20/07/2017 - 20/08/2018)** ((((CAPPRM:AS1210 , CAPPRM:CE , CAPPRM:MHLW , CAPPRM:MOM) + MOVOL:400V , CAPPRM:CE + MOVOL:500V , CAPPRM:MHLW + MOVOL:200V) + FREQ:50HZ , (CAPPRM:ASME , CAPPRM:MHLW) + FREQ:60HZ + MOVOL:460V) + CAPPRE:IEC , (MOVOL:230V , MOVOL:460V , MOVOL:575V) + CAPPRE:ULCUL + CAPPRM:ASME + FREQ:60HZ) + COOL:AIR **(21/08/2018 - 10/12/2018)** ((((CAPPRM:AS1210 , CAPPRM:CE , CAPPRM:MHLW , CAPPRM:MOM) + MOVOL:400V , (CAPPRM:CE + MOVOL:500V , CAPPRM:MHLW + MOVOL:200V) + COOL:AIR) + FREQ:50HZ , (CAPPRM:ASME , CAPPRM:MHLW) + FREQ:60HZ + MOVOL:460V) + CAPPRE:IEC , ((MOVOL:230V , MOVOL:575V) + COOL:AIR , MOVOL:460V) + CAPPRE:ULCUL + CAPPRM:ASME + FREQ:60HZ) **(11/12/2018 - 11/12/2018)** ((((CAPPRM:AS1210 , CAPPRM:CE , CAPPRM:MHLW , CAPPRM:MOM) + MOVOL:400V , (CAPPRM:CE + MOVOL:500V , CAPPRM:MHLW + MOVOL:200V) + COOL:AIR) + FREQ:50HZ , (CAPPRM:ASME , CAPPRM:MHLW) + COOL:WATER + FREQ:60HZ + MOVOL:460V) + CAPPRE:IEC , ((MOVOL:230V , MOVOL:575V) + COOL:AIR , MOVOL:460V) + CAPPRE:ULCUL + CAPPRM:ASME + FREQ:60HZ)	Q15
	1088 0038 26	1	TERMINAL	**(20/07/2017 - 20/08/2018)** ((((CAPPRM:AS1210 , CAPPRM:CE , CAPPRM:MHLW , CAPPRM:MOM) + MOVOL:400V , CAPPRM:CE + MOVOL:500V , CAPPRM:MHLW + MOVOL:200V) + FREQ:50HZ , (CAPPRM:ASME , CAPPRM:MHLW) + FREQ:60HZ + MOVOL:460V) + CAPPRE:IEC , (MOVOL:230V , MOVOL:460V , MOVOL:575V) + CAPPRE:ULCUL + CAPPRM:ASME + FREQ:60HZ) + COOL:AIR **(21/08/2018 - 10/12/2018)** ((((CAPPRM:AS1210 , CAPPRM:CE , CAPPRM:MHLW , CAPPRM:MOM) + MOVOL:400V , (CAPPRM:CE + MOVOL:500V , CAPPRM:MHLW + MOVOL:200V) + COOL:AIR) + FREQ:50HZ , (CAPPRM:ASME , CAPPRM:MHLW) + FREQ:60HZ + MOVOL:460V) + CAPPRE:IEC , ((MOVOL:230V , MOVOL:575V) + COOL:AIR , MOVOL:460V) + CAPPRE:ULCUL + CAPPRM:ASME + FREQ:60HZ) **(11/12/2018 - 11/12/2018)** ((((CAPPRM:AS1210 , CAPPRM:CE , CAPPRM:MHLW , CAPPRM:MOM) + MOVOL:400V , (CAPPRM:CE + MOVOL:500V , CAPPRM:MHLW + MOVOL:200V) + COOL:AIR) + FREQ:50HZ , (CAPPRM:ASME , CAPPRM:MHLW) + COOL:WATER + FREQ:60HZ + MOVOL:460V) + CAPPRE:IEC , ((MOVOL:230V , MOVOL:575V) + COOL:AIR , MOVOL:460V) + CAPPRE:ULCUL + CAPPRM:ASME + FREQ:60HZ)	1X1:Y/D

Legend:

CAPPRE:IEC - Component approval electrical:IEC
CAPPRM:ASME - Component approval mechanical:ASME
CAPPRM:MOM - Component approval mechanical:MOM
FREQ:50HZ - Frequency:50 Hz
MODEL:GA110VP_16 - Model:GA 110VSD+
MOVOL:400V - Supply voltage:400 V
MOVOL:575V - Supply voltage:575 V
CAPPRE:ULCUL - Component approval electrical:UL/cUL
CAPPRM:CE - Component approval mechanical:CE
COOL:AIR - Cooling:Air cooled
FREQ:60HZ - Frequency:60 Hz
MOVOL:200V - Supply voltage:200 V
MOVOL:460V - Supply voltage:460 V
CAPPRM:AS1210 - Component approval mechanical:AS1210
CAPPRM:MHLW - Component approval mechanical:MHLW
COOL:WATER - Cooling:Water cooled
IDRY:Y - Integrated dryer:Yes
MOVOL:230V - Supply voltage:230 V
MOVOL:500V - Supply voltage:500 V

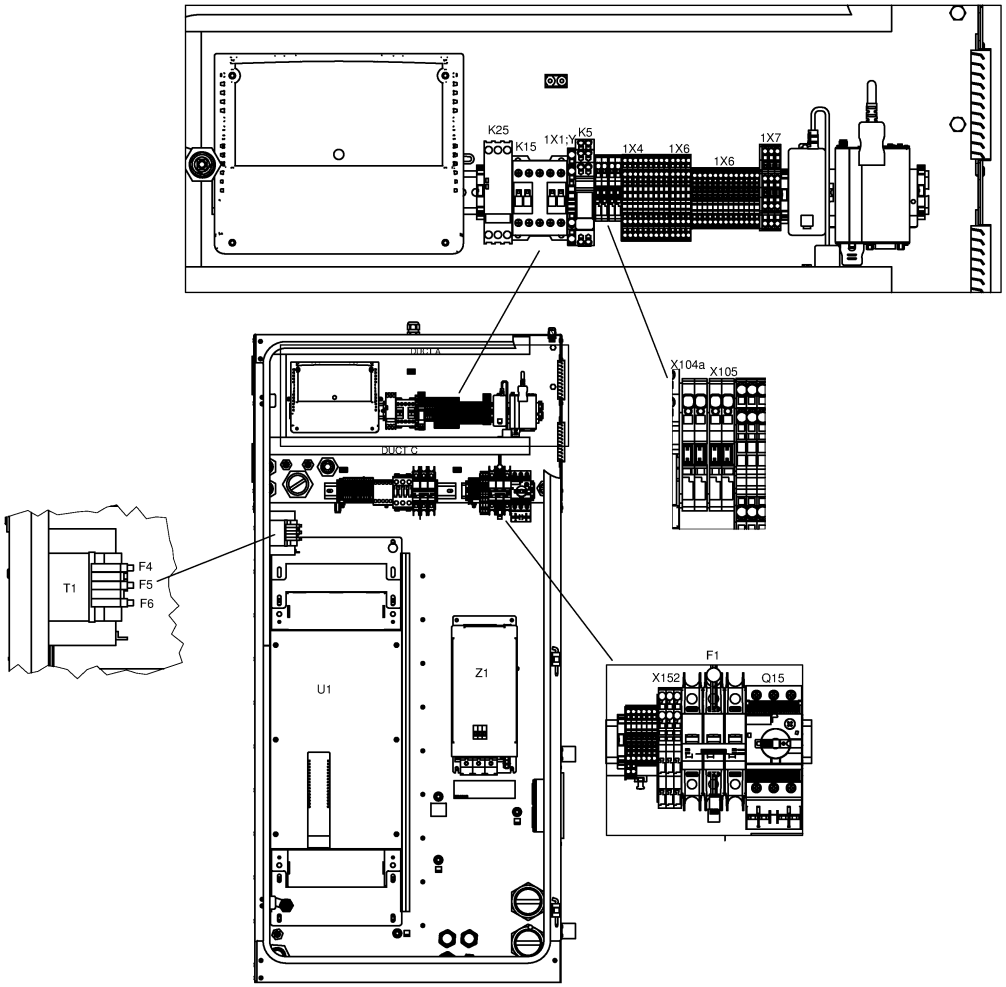
K25
K15
1X1:Y
K5
1X4
1X6
1X6
1X7
X104a
X105
DUCT A
DUCT C
T1
F4
F5
F6
U1
Z1
F1
X152
Q15

21.26 - Cubicle components GA 110 VSD+ - (200V-400V-500V/50Hz, 460V/60Hz - IEC, 230V-460V-575V/60Hz - UL-cUL) - Full-Feature (20/07/2017 - 11/12/2018)

(((MOVOL:200V , MOVOL:400V , MOVOL:500V) + FREQ:50HZ , FREQ:60HZ + MOVOL:460V) + CAPPRE:IEC , (MOVOL:230V , MOVOL:460V , MOVOL:575V) + CAPPRE:ULCUL + FREQ:60HZ) + IDRY:Y + MODEL:GA110VP_16

Ref	Part Number	Qty	Name	Validity	EL
	1089 9602 79	1	CONTACTOR 110 V	**(20/07/2017 - 20/08/2018)** ((((CAPPRM:AS1210 , CAPPRM:CE , CAPPRM:MHLW , CAPPRM:MOM) + MOVOL:400V , CAPPRM:CE + MOVOL:500V , CAPPRM:MHLW + MOVOL:200V) + FREQ:50HZ , (CAPPRM:ASME , CAPPRM:MHLW) + FREQ:60HZ + MOVOL:460V) + CAPPRE:IEC , (MOVOL:230V , MOVOL:460V , MOVOL:575V) + CAPPRE:ULCUL + CAPPRM:ASME + FREQ:60HZ) + COOL:AIR **(21/08/2018 - 10/12/2018)** ((((CAPPRM:AS1210 , CAPPRM:CE , CAPPRM:MHLW , CAPPRM:MOM) + MOVOL:400V , (CAPPRM:CE + MOVOL:500V , CAPPRM:MHLW + MOVOL:200V) + COOL:AIR) + FREQ:50HZ , (CAPPRM:ASME , CAPPRM:MHLW) + FREQ:60HZ + MOVOL:460V) + CAPPRE:IEC , ((MOVOL:230V , MOVOL:575V) + COOL:AIR , MOVOL:460V) + CAPPRE:ULCUL + CAPPRM:ASME + FREQ:60HZ) **(11/12/2018 - 11/12/2018)** ((((CAPPRM:AS1210 , CAPPRM:CE , CAPPRM:MHLW , CAPPRM:MOM) + MOVOL:400V , (CAPPRM:CE + MOVOL:500V , CAPPRM:MHLW + MOVOL:200V) + COOL:AIR) + FREQ:50HZ , (CAPPRM:ASME , CAPPRM:MHLW) + COOL:WATER + FREQ:60HZ + MOVOL:460V) + CAPPRE:IEC , ((MOVOL:230V , MOVOL:575V) + COOL:AIR , MOVOL:460V) + CAPPRE:ULCUL + CAPPRM:ASME + FREQ:60HZ)	K15
	1089 9461 26	1	PHASE SEQUENCE RELAY	**(20/07/2017 - 20/08/2018)** ((((CAPPRM:AS1210 , CAPPRM:CE , CAPPRM:MHLW , CAPPRM:MOM) + MOVOL:400V , CAPPRM:CE + MOVOL:500V , CAPPRM:MHLW + MOVOL:200V) + FREQ:50HZ , (CAPPRM:ASME , CAPPRM:MHLW) + FREQ:60HZ + MOVOL:460V) + CAPPRE:IEC , (MOVOL:230V , MOVOL:460V , MOVOL:575V) + CAPPRE:ULCUL + CAPPRM:ASME + FREQ:60HZ) + COOL:AIR **(21/08/2018 - 10/12/2018)** ((((CAPPRM:AS1210 , CAPPRM:CE , CAPPRM:MHLW , CAPPRM:MOM) + MOVOL:400V , (CAPPRM:CE + MOVOL:500V , CAPPRM:MHLW + MOVOL:200V) + COOL:AIR) + FREQ:50HZ , (CAPPRM:ASME , CAPPRM:MHLW) + FREQ:60HZ + MOVOL:460V) + CAPPRE:IEC , ((MOVOL:230V , MOVOL:575V) + COOL:AIR , MOVOL:460V) + CAPPRE:ULCUL + CAPPRM:ASME + FREQ:60HZ) **(11/12/2018 - 11/12/2018)** ((((CAPPRM:AS1210 , CAPPRM:CE , CAPPRM:MHLW , CAPPRM:MOM) + MOVOL:400V , (CAPPRM:CE + MOVOL:500V , CAPPRM:MHLW + MOVOL:200V) + COOL:AIR) + FREQ:50HZ , (CAPPRM:ASME , CAPPRM:MHLW) + COOL:WATER + FREQ:60HZ + MOVOL:460V) + CAPPRE:IEC , ((MOVOL:230V , MOVOL:575V) + COOL:AIR , MOVOL:460V) + CAPPRE:ULCUL + CAPPRM:ASME + FREQ:60HZ)	K25

Legend:

CAPPRE:IEC - Component approval electrical:IEC
CAPPRM:ASME - Component approval mechanical:ASME
CAPPRM:MOM - Component approval mechanical:MOM
FREQ:50HZ - Frequency:50 Hz
MODEL:GA110VP_16 - Model:GA 110VSD+
MOVOL:400V - Supply voltage:400 V
MOVOL:575V - Supply voltage:575 V
CAPPRE:ULCUL - Component approval electrical:UL/cUL
CAPPRM:CE - Component approval mechanical:CE
COOL:AIR - Cooling:Air cooled
FREQ:60HZ - Frequency:60 Hz
MOVOL:200V - Supply voltage:200 V
MOVOL:460V - Supply voltage:460 V
CAPPRM:AS1210 - Component approval mechanical:AS1210
CAPPRM:MHLW - Component approval mechanical:MHLW
COOL:WATER - Cooling:Water cooled
IDRY:Y - Integrated dryer:Yes
MOVOL:230V - Supply voltage:230 V
MOVOL:500V - Supply voltage:500 V

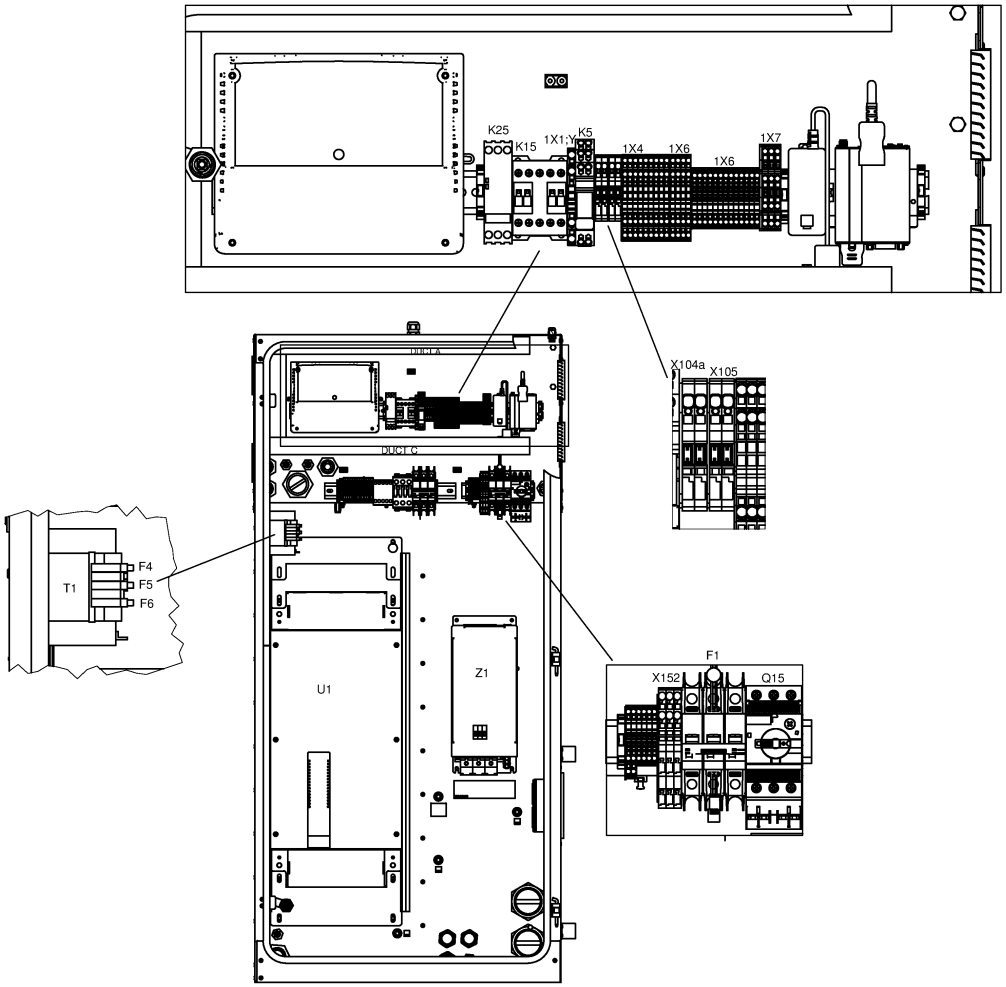
K25
K15
1X1:Y
K5
1X4
1X6
1X6
1X7
X104a
X105
DUCT A
DUCT C
T1
F4
F5
F6
U1
Z1
F1
X152
Q15

21.26 - Cubicle components GA 110 VSD+ - (200V-400V-500V/50Hz, 460V/60Hz - IEC, 230V-460V-575V/60Hz - UL-cUL) - Full-Feature (20/07/2017 - 11/12/2018)

(((MOVOL:200V , MOVOL:400V , MOVOL:500V) + FREQ:50HZ , FREQ:60HZ + MOVOL:460V) + CAPPRE:IEC , (MOVOL:230V , MOVOL:460V , MOVOL:575V) + CAPPRE:ULCUL + FREQ:60HZ) + IDRY:Y + MODEL:GA110VP_16

Ref	Part Number	Qty	Name	Validity	EL
	1088 0032 17	1	RELAY 115 VAC	**(20/07/2017 - 20/08/2018)** ((((CAPPRM:AS1210 , CAPPRM:CE , CAPPRM:MHLW , CAPPRM:MOM) + MOVOL:400V , CAPPRM:CE + MOVOL:500V , CAPPRM:MHLW + MOVOL:200V) + FREQ:50HZ , (CAPPRM:ASME , CAPPRM:MHLW) + FREQ:60HZ + MOVOL:460V) + CAPPRE:IEC , (MOVOL:230V , MOVOL:460V , MOVOL:575V) + CAPPRE:ULCUL + CAPPRM:ASME + FREQ:60HZ) + COOL:AIR **(21/08/2018 - 10/12/2018)** ((((CAPPRM:AS1210 , CAPPRM:CE , CAPPRM:MHLW , CAPPRM:MOM) + MOVOL:400V , (CAPPRM:CE + MOVOL:500V , CAPPRM:MHLW + MOVOL:200V) + COOL:AIR) + FREQ:50HZ , (CAPPRM:ASME , CAPPRM:MHLW) + FREQ:60HZ + MOVOL:460V) + CAPPRE:IEC , ((MOVOL:230V , MOVOL:575V) + COOL:AIR , MOVOL:460V) + CAPPRE:ULCUL + CAPPRM:ASME + FREQ:60HZ) **(11/12/2018 - 11/12/2018)** ((((CAPPRM:AS1210 , CAPPRM:CE , CAPPRM:MHLW , CAPPRM:MOM) + MOVOL:400V , (CAPPRM:CE + MOVOL:500V , CAPPRM:MHLW + MOVOL:200V) + COOL:AIR) + FREQ:50HZ , (CAPPRM:ASME , CAPPRM:MHLW) + COOL:WATER + FREQ:60HZ + MOVOL:460V) + CAPPRE:IEC , ((MOVOL:230V , MOVOL:575V) + COOL:AIR , MOVOL:460V) + CAPPRE:ULCUL + CAPPRM:ASME + FREQ:60HZ)	K5
	0991 8011 21	AR	CABLE TRAY	**(20/07/2017 - 20/08/2018)** ((((CAPPRM:AS1210 , CAPPRM:CE , CAPPRM:MHLW , CAPPRM:MOM) + MOVOL:400V , CAPPRM:CE + MOVOL:500V , CAPPRM:MHLW + MOVOL:200V) + FREQ:50HZ , (CAPPRM:ASME , CAPPRM:MHLW) + FREQ:60HZ + MOVOL:460V) + CAPPRE:IEC , (MOVOL:230V , MOVOL:460V , MOVOL:575V) + CAPPRE:ULCUL + CAPPRM:ASME + FREQ:60HZ) + COOL:AIR **(21/08/2018 - 10/12/2018)** ((((CAPPRM:AS1210 , CAPPRM:CE , CAPPRM:MHLW , CAPPRM:MOM) + MOVOL:400V , (CAPPRM:CE + MOVOL:500V , CAPPRM:MHLW + MOVOL:200V) + COOL:AIR) + FREQ:50HZ , (CAPPRM:ASME , CAPPRM:MHLW) + FREQ:60HZ + MOVOL:460V) + CAPPRE:IEC , ((MOVOL:230V , MOVOL:575V) + COOL:AIR , MOVOL:460V) + CAPPRE:ULCUL + CAPPRM:ASME + FREQ:60HZ) **(11/12/2018 - 11/12/2018)** ((((CAPPRM:AS1210 , CAPPRM:CE , CAPPRM:MHLW , CAPPRM:MOM) + MOVOL:400V , (CAPPRM:CE + MOVOL:500V , CAPPRM:MHLW + MOVOL:200V) + COOL:AIR) + FREQ:50HZ , (CAPPRM:ASME , CAPPRM:MHLW) + COOL:WATER + FREQ:60HZ + MOVOL:460V) + CAPPRE:IEC , ((MOVOL:230V , MOVOL:575V) + COOL:AIR , MOVOL:460V) + CAPPRE:ULCUL + CAPPRM:ASME + FREQ:60HZ)	L=1384mm

Legend:

CAPPRE:IEC - Component approval electrical:IEC
CAPPRM:ASME - Component approval mechanical:ASME
CAPPRM:MOM - Component approval mechanical:MOM
FREQ:50HZ - Frequency:50 Hz
MODEL:GA110VP_16 - Model:GA 110VSD+
MOVOL:400V - Supply voltage:400 V
MOVOL:575V - Supply voltage:575 V
CAPPRE:ULCUL - Component approval electrical:UL/cUL
CAPPRM:CE - Component approval mechanical:CE
COOL:AIR - Cooling:Air cooled
FREQ:60HZ - Frequency:60 Hz
MOVOL:200V - Supply voltage:200 V
MOVOL:460V - Supply voltage:460 V
CAPPRM:AS1210 - Component approval mechanical:AS1210
CAPPRM:MHLW - Component approval mechanical:MHLW
COOL:WATER - Cooling:Water cooled
IDRY:Y - Integrated dryer:Yes
MOVOL:230V - Supply voltage:230 V
MOVOL:500V - Supply voltage:500 V

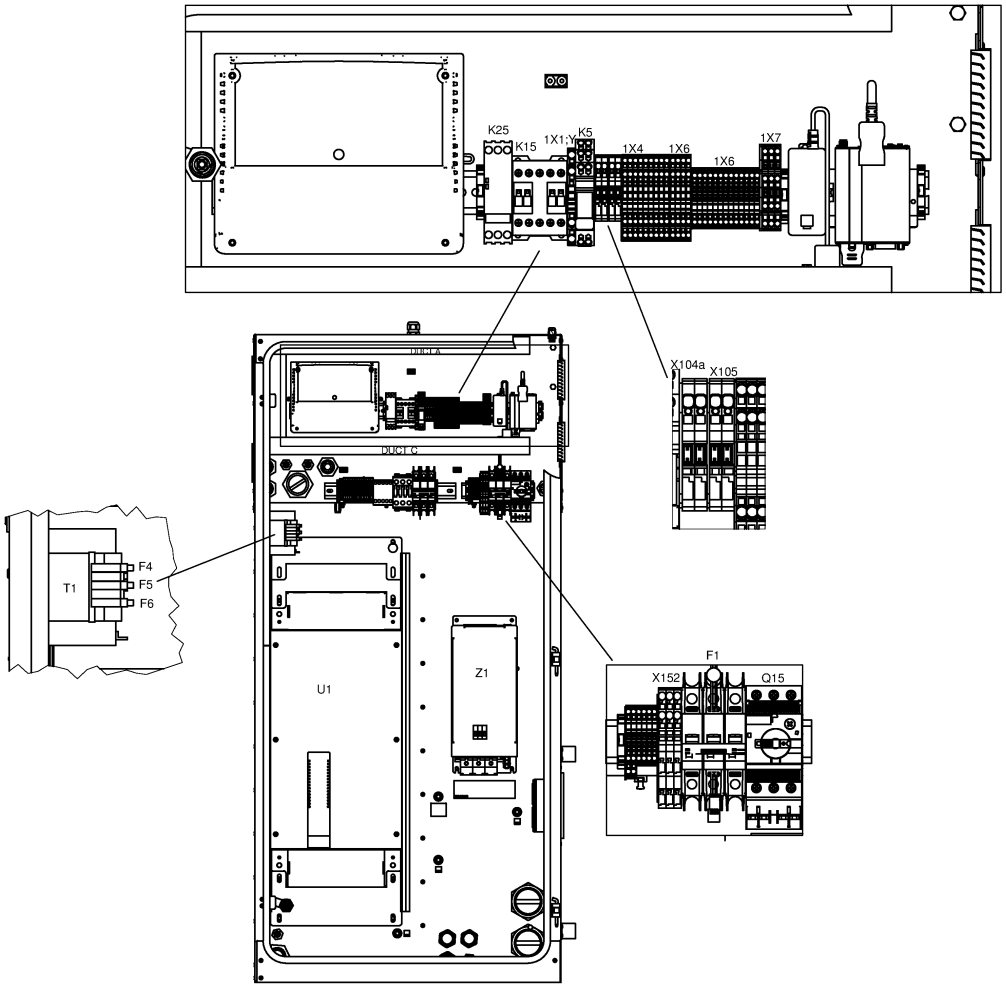
K25
K15
1X1:Y
K5
1X4
1X6
1X6
1X7
X104a
X105
DUCT A
DUCT C
T1
F4
F5
F6
U1
Z1
F1
X152
Q15

21.26 - Cubicle components GA 110 VSD+ - (200V-400V-500V/50Hz, 460V/60Hz - IEC, 230V-460V-575V/60Hz - UL-cUL) - Full-Feature (20/07/2017 - 11/12/2018)

(((MOVOL:200V , MOVOL:400V , MOVOL:500V) + FREQ:50HZ , FREQ:60HZ + MOVOL:460V) + CAPPRE:IEC , (MOVOL:230V , MOVOL:460V , MOVOL:575V) + CAPPRE:ULCUL + FREQ:60HZ) + IDRY:Y + MODEL:GA110VP_16

Ref	Part Number	Qty	Name	Validity	EL
	1900 2203 02	1	DRYER RAIL	**(20/07/2017 - 20/08/2018)** ((((CAPPRM:AS1210 , CAPPRM:CE , CAPPRM:MHLW , CAPPRM:MOM) + MOVOL:400V , CAPPRM:CE + MOVOL:500V , CAPPRM:MHLW + MOVOL:200V) + FREQ:50HZ , (CAPPRM:ASME , CAPPRM:MHLW) + FREQ:60HZ + MOVOL:460V) + CAPPRE:IEC , (MOVOL:230V , MOVOL:460V , MOVOL:575V) + CAPPRE:ULCUL + CAPPRM:ASME + FREQ:60HZ) + COOL:AIR **(21/08/2018 - 10/12/2018)** ((((CAPPRM:AS1210 , CAPPRM:CE , CAPPRM:MHLW , CAPPRM:MOM) + MOVOL:400V , (CAPPRM:CE + MOVOL:500V , CAPPRM:MHLW + MOVOL:200V) + COOL:AIR) + FREQ:50HZ , (CAPPRM:ASME , CAPPRM:MHLW) + FREQ:60HZ + MOVOL:460V) + CAPPRE:IEC , ((MOVOL:230V , MOVOL:575V) + COOL:AIR , MOVOL:460V) + CAPPRE:ULCUL + CAPPRM:ASME + FREQ:60HZ) **(11/12/2018 - 11/12/2018)** ((((CAPPRM:AS1210 , CAPPRM:CE , CAPPRM:MHLW , CAPPRM:MOM) + MOVOL:400V , (CAPPRM:CE + MOVOL:500V , CAPPRM:MHLW + MOVOL:200V) + COOL:AIR) + FREQ:50HZ , (CAPPRM:ASME , CAPPRM:MHLW) + COOL:WATER + FREQ:60HZ + MOVOL:460V) + CAPPRE:IEC , ((MOVOL:230V , MOVOL:575V) + COOL:AIR , MOVOL:460V) + CAPPRE:ULCUL + CAPPRM:ASME + FREQ:60HZ)	-
	1088 0031 13	1	CONNECTOR 13-POLE	**(20/07/2017 - 20/08/2018)** ((((CAPPRM:AS1210 , CAPPRM:CE , CAPPRM:MHLW , CAPPRM:MOM) + MOVOL:400V , CAPPRM:CE + MOVOL:500V , CAPPRM:MHLW + MOVOL:200V) + FREQ:50HZ , (CAPPRM:ASME , CAPPRM:MHLW) + FREQ:60HZ + MOVOL:460V) + CAPPRE:IEC , (MOVOL:230V , MOVOL:460V , MOVOL:575V) + CAPPRE:ULCUL + CAPPRM:ASME + FREQ:60HZ) + COOL:AIR **(21/08/2018 - 10/12/2018)** ((((CAPPRM:AS1210 , CAPPRM:CE , CAPPRM:MHLW , CAPPRM:MOM) + MOVOL:400V , (CAPPRM:CE + MOVOL:500V , CAPPRM:MHLW + MOVOL:200V) + COOL:AIR) + FREQ:50HZ , (CAPPRM:ASME , CAPPRM:MHLW) + FREQ:60HZ + MOVOL:460V) + CAPPRE:IEC , ((MOVOL:230V , MOVOL:575V) + COOL:AIR , MOVOL:460V) + CAPPRE:ULCUL + CAPPRM:ASME + FREQ:60HZ) **(11/12/2018 - 11/12/2018)** ((((CAPPRM:AS1210 , CAPPRM:CE , CAPPRM:MHLW , CAPPRM:MOM) + MOVOL:400V , (CAPPRM:CE + MOVOL:500V , CAPPRM:MHLW + MOVOL:200V) + COOL:AIR) + FREQ:50HZ , (CAPPRM:ASME , CAPPRM:MHLW) + COOL:WATER + FREQ:60HZ + MOVOL:460V) + CAPPRE:IEC , ((MOVOL:230V , MOVOL:575V) + COOL:AIR , MOVOL:460V) + CAPPRE:ULCUL + CAPPRM:ASME + FREQ:60HZ)	1X30

Legend:

CAPPRE:IEC - Component approval electrical:IEC
CAPPRE:ULCUL - Component approval electrical:UL/cUL
CAPPRM:AS1210 - Component approval mechanical:AS1210
CAPPRM:ASME - Component approval mechanical:ASME
CAPPRM:CE - Component approval mechanical:CE
CAPPRM:MHLW - Component approval mechanical:MHLW
CAPPRM:MOM - Component approval mechanical:MOM
COOL:AIR - Cooling:Air cooled
COOL:WATER - Cooling:Water cooled
FREQ:50HZ - Frequency:50 Hz
FREQ:60HZ - Frequency:60 Hz
IDRY:Y - Integrated dryer:Yes
MODEL:GA110VP_16 - Model:GA 110VSD+
MOVOL:200V - Supply voltage:200 V
MOVOL:230V - Supply voltage:230 V
MOVOL:400V - Supply voltage:400 V
MOVOL:460V - Supply voltage:460 V
MOVOL:500V - Supply voltage:500 V
MOVOL:575V - Supply voltage:575 V

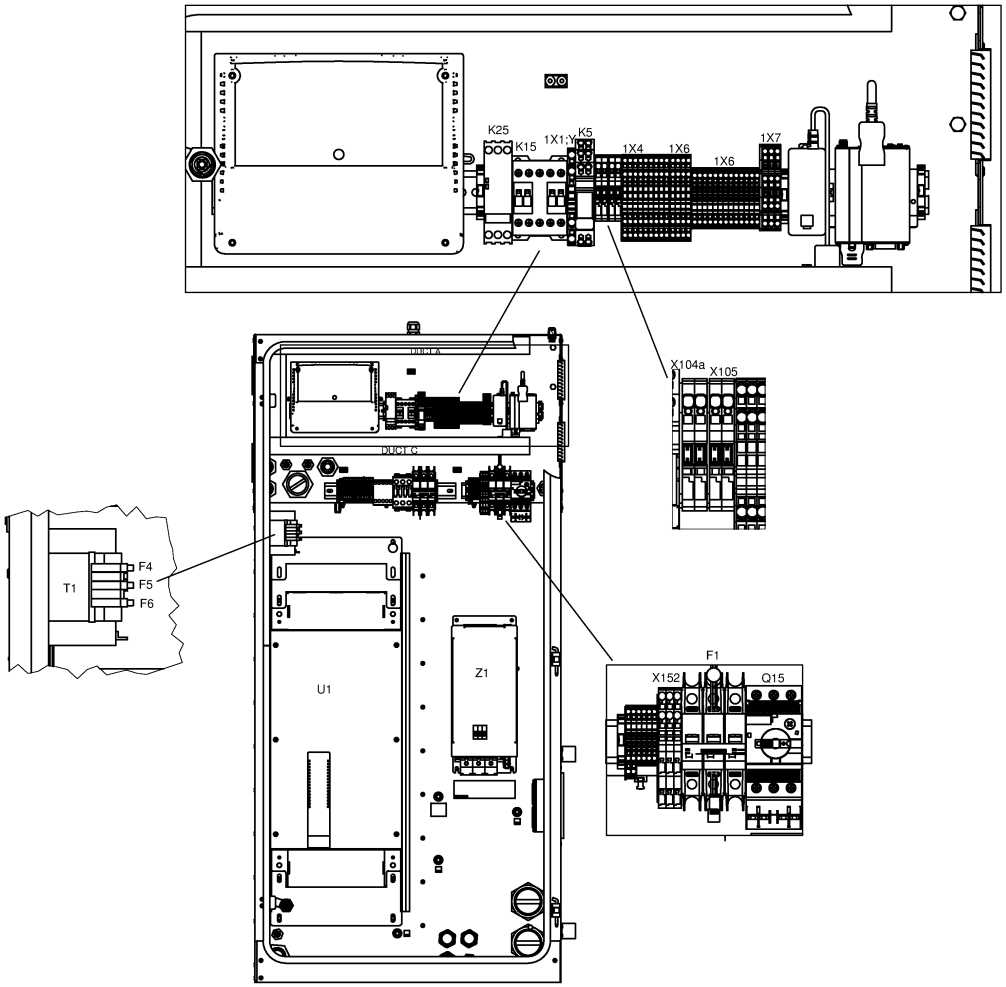
K25
K15
1X1:Y
K5
1X4
1X6
1X6
1X7
X104a
X105
DUCT A
DUCT C
T1
F4
F5
F6
U1
Z1
F1
X152
Q15

21.26 - Cubicle components GA 110 VSD+ - (200V-400V-500V/50Hz, 460V/60Hz - IEC, 230V-460V-575V/60Hz - UL-cUL) - Full-Feature (20/07/2017 - 11/12/2018)

(((MOVOL:200V , MOVOL:400V , MOVOL:500V) + FREQ:50HZ , FREQ:60HZ + MOVOL:460V) + CAPPRE:IEC , (MOVOL:230V , MOVOL:460V , MOVOL:575V) + CAPPRE:ULCUL + FREQ:60HZ) + IDRY:Y + MODEL:GA110VP_16

Ref	Part Number	Qty	Name	Validity	EL
	1088 0037 82	1	CONNECTOR	**(20/07/2017 - 20/08/2018)** ((((CAPPRM:AS1210 , CAPPRM:CE , CAPPRM:MHLW , CAPPRM:MOM) + MOVOL:400V , CAPPRM:CE + MOVOL:500V , CAPPRM:MHLW + MOVOL:200V) + FREQ:50HZ , (CAPPRM:ASME , CAPPRM:MHLW) + FREQ:60HZ + MOVOL:460V) + CAPPRE:IEC , (MOVOL:230V , MOVOL:460V , MOVOL:575V) + CAPPRE:ULCUL + CAPPRM:ASME + FREQ:60HZ) + COOL:AIR **(21/08/2018 - 10/12/2018)** ((((CAPPRM:AS1210 , CAPPRM:CE , CAPPRM:MHLW , CAPPRM:MOM) + MOVOL:400V , (CAPPRM:CE + MOVOL:500V , CAPPRM:MHLW + MOVOL:200V) + COOL:AIR) + FREQ:50HZ , (CAPPRM:ASME , CAPPRM:MHLW) + FREQ:60HZ + MOVOL:460V) + CAPPRE:IEC , ((MOVOL:230V , MOVOL:575V) + COOL:AIR , MOVOL:460V) + CAPPRE:ULCUL + CAPPRM:ASME + FREQ:60HZ) **(11/12/2018 - 11/12/2018)** ((((CAPPRM:AS1210 , CAPPRM:CE , CAPPRM:MHLW , CAPPRM:MOM) + MOVOL:400V , (CAPPRM:CE + MOVOL:500V , CAPPRM:MHLW + MOVOL:200V) + COOL:AIR) + FREQ:50HZ , (CAPPRM:ASME , CAPPRM:MHLW) + COOL:WATER + FREQ:60HZ + MOVOL:460V) + CAPPRE:IEC , ((MOVOL:230V , MOVOL:575V) + COOL:AIR , MOVOL:460V) + CAPPRE:ULCUL + CAPPRM:ASME + FREQ:60HZ)	3X34
	0697 9811 13	1	PLUG M25	**(20/07/2017 - 20/08/2018)** ((((CAPPRM:AS1210 , CAPPRM:CE , CAPPRM:MHLW , CAPPRM:MOM) + MOVOL:400V , CAPPRM:CE + MOVOL:500V , CAPPRM:MHLW + MOVOL:200V) + FREQ:50HZ , (CAPPRM:ASME , CAPPRM:MHLW) + FREQ:60HZ + MOVOL:460V) + CAPPRE:IEC , (MOVOL:230V , MOVOL:460V , MOVOL:575V) + CAPPRE:ULCUL + CAPPRM:ASME + FREQ:60HZ) + COOL:AIR **(21/08/2018 - 10/12/2018)** ((((CAPPRM:AS1210 , CAPPRM:CE , CAPPRM:MHLW , CAPPRM:MOM) + MOVOL:400V , (CAPPRM:CE + MOVOL:500V , CAPPRM:MHLW + MOVOL:200V) + COOL:AIR) + FREQ:50HZ , (CAPPRM:ASME , CAPPRM:MHLW) + FREQ:60HZ + MOVOL:460V) + CAPPRE:IEC , ((MOVOL:230V , MOVOL:575V) + COOL:AIR , MOVOL:460V) + CAPPRE:ULCUL + CAPPRM:ASME + FREQ:60HZ) **(11/12/2018 - 11/12/2018)** ((((CAPPRM:AS1210 , CAPPRM:CE , CAPPRM:MHLW , CAPPRM:MOM) + MOVOL:400V , (CAPPRM:CE + MOVOL:500V , CAPPRM:MHLW + MOVOL:200V) + COOL:AIR) + FREQ:50HZ , (CAPPRM:ASME , CAPPRM:MHLW) + COOL:WATER + FREQ:60HZ + MOVOL:460V) + CAPPRE:IEC , ((MOVOL:230V , MOVOL:575V) + COOL:AIR , MOVOL:460V) + CAPPRE:ULCUL + CAPPRM:ASME + FREQ:60HZ)	

Electrical legend: Energy recovery

Legend:

CAPPRE:IEC - Component approval electrical:IEC
CAPPRM:ASME - Component approval mechanical:ASME
CAPPRM:MOM - Component approval mechanical:MOM
FREQ:50HZ - Frequency:50 Hz
MODEL:GA110VP_16 - Model:GA 110VSD+
MOVOL:400V - Supply voltage:400 V
MOVOL:575V - Supply voltage:575 V
CAPPRE:ULCUL - Component approval electrical:UL/cUL
CAPPRM:CE - Component approval mechanical:CE
COOL:AIR - Cooling:Air cooled
FREQ:60HZ - Frequency:60 Hz
MOVOL:200V - Supply voltage:200 V
MOVOL:460V - Supply voltage:460 V
CAPPRM:AS1210 - Component approval mechanical:AS1210
CAPPRM:MHLW - Component approval mechanical:MHLW
COOL:WATER - Cooling:Water cooled
IDRY:Y - Integrated dryer:Yes
MOVOL:230V - Supply voltage:230 V
MOVOL:500V - Supply voltage:500 V

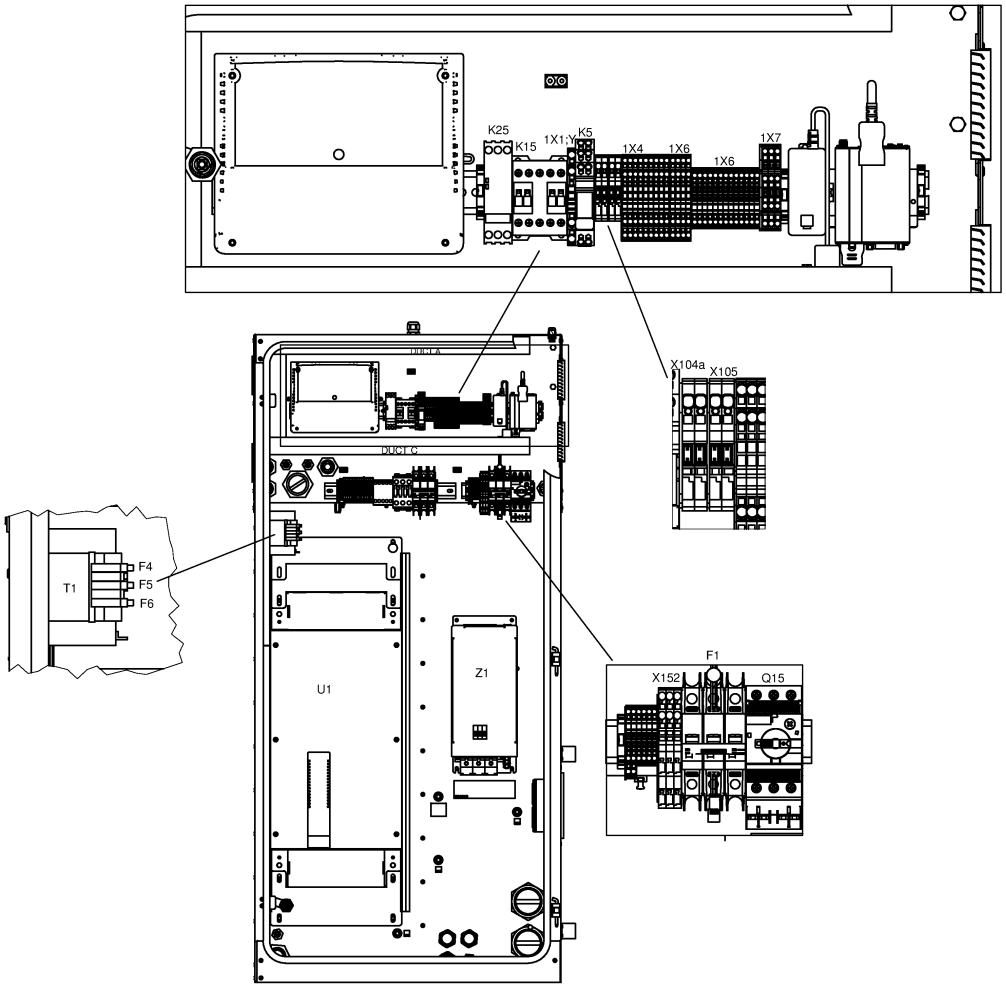
K25
K15
1X1:Y
K5
1X4
1X6
1X6
1X7
X104a
X105
DUCT A
DUCT C
T1
F4
F5
F6
U1
Z1
F1
X152
Q15

21.26 - Cubicle components GA 110 VSD+ - (200V-400V-500V/50Hz, 460V/60Hz - IEC, 230V-460V-575V/60Hz - UL-cUL) - Full-Feature (20/07/2017 - 11/12/2018)

(((MOVOL:200V , MOVOL:400V , MOVOL:500V) + FREQ:50HZ , FREQ:60HZ + MOVOL:460V) + CAPPRE:IEC , (MOVOL:230V , MOVOL:460V , MOVOL:575V) + CAPPRE:ULCUL + FREQ:60HZ) + IDRY:Y + MODEL:GA110VP_16

Ref	Part Number	Qty	Name	Validity	EL
	0989 3700 44	1	LOCKNUT	**(20/07/2017 - 20/08/2018)** ((((CAPPRM:AS1210 , CAPPRM:CE , CAPPRM:MHLW , CAPPRM:MOM) + MOVOL:400V , CAPPRM:CE + MOVOL:500V , CAPPRM:MHLW + MOVOL:200V) + FREQ:50HZ , (CAPPRM:ASME , CAPPRM:MHLW) + FREQ:60HZ + MOVOL:460V) + CAPPRE:IEC , (MOVOL:230V , MOVOL:460V , MOVOL:575V) + CAPPRE:ULCUL + CAPPRM:ASME + FREQ:60HZ) + COOL:AIR **(21/08/2018 - 10/12/2018)** ((((CAPPRM:AS1210 , CAPPRM:CE , CAPPRM:MHLW , CAPPRM:MOM) + MOVOL:400V , (CAPPRM:CE + MOVOL:500V , CAPPRM:MHLW + MOVOL:200V) + COOL:AIR) + FREQ:50HZ , (CAPPRM:ASME , CAPPRM:MHLW) + FREQ:60HZ + MOVOL:460V) + CAPPRE:IEC , ((MOVOL:230V , MOVOL:575V) + COOL:AIR , MOVOL:460V) + CAPPRE:ULCUL + CAPPRM:ASME + FREQ:60HZ) **(11/12/2018 - 11/12/2018)** ((((CAPPRM:AS1210 , CAPPRM:CE , CAPPRM:MHLW , CAPPRM:MOM) + MOVOL:400V , (CAPPRM:CE + MOVOL:500V , CAPPRM:MHLW + MOVOL:200V) + COOL:AIR) + FREQ:50HZ , (CAPPRM:ASME , CAPPRM:MHLW) + COOL:WATER + FREQ:60HZ + MOVOL:460V) + CAPPRE:IEC , ((MOVOL:230V , MOVOL:575V) + COOL:AIR , MOVOL:460V) + CAPPRE:ULCUL + CAPPRM:ASME + FREQ:60HZ)	
	Electrical legend:	Energy recovery			
	0697 9811 12	1	PLUG	**(20/07/2017 - 20/08/2018)** ((((CAPPRM:AS1210 , CAPPRM:CE , CAPPRM:MHLW , CAPPRM:MOM) + MOVOL:400V , CAPPRM:CE + MOVOL:500V , CAPPRM:MHLW + MOVOL:200V) + FREQ:50HZ , (CAPPRM:ASME , CAPPRM:MHLW) + FREQ:60HZ + MOVOL:460V) + CAPPRE:IEC , (MOVOL:230V , MOVOL:460V , MOVOL:575V) + CAPPRE:ULCUL + CAPPRM:ASME + FREQ:60HZ) + COOL:AIR **(21/08/2018 - 10/12/2018)** ((((CAPPRM:AS1210 , CAPPRM:CE , CAPPRM:MHLW , CAPPRM:MOM) + MOVOL:400V , (CAPPRM:CE + MOVOL:500V , CAPPRM:MHLW + MOVOL:200V) + COOL:AIR) + FREQ:50HZ , (CAPPRM:ASME , CAPPRM:MHLW) + FREQ:60HZ + MOVOL:460V) + CAPPRE:IEC , ((MOVOL:230V , MOVOL:575V) + COOL:AIR , MOVOL:460V) + CAPPRE:ULCUL + CAPPRM:ASME + FREQ:60HZ) **(11/12/2018 - 11/12/2018)** ((((CAPPRM:AS1210 , CAPPRM:CE , CAPPRM:MHLW , CAPPRM:MOM) + MOVOL:400V , (CAPPRM:CE + MOVOL:500V , CAPPRM:MHLW + MOVOL:200V) + COOL:AIR) + FREQ:50HZ , (CAPPRM:ASME , CAPPRM:MHLW) + COOL:WATER + FREQ:60HZ + MOVOL:460V) + CAPPRE:IEC , ((MOVOL:230V , MOVOL:575V) + COOL:AIR , MOVOL:460V) + CAPPRE:ULCUL + CAPPRM:ASME + FREQ:60HZ)	
	Electrical legend:	Control circuit of T10			

Legend:

CAPPRE:IEC - Component approval electrical:IEC
CAPPRM:ASME - Component approval mechanical:ASME
CAPPRM:MOM - Component approval mechanical:MOM
FREQ:50HZ - Frequency:50 Hz
MODEL:GA110VP_16 - Model:GA 110VSD+
MOVOL:400V - Supply voltage:400 V
MOVOL:575V - Supply voltage:575 V
CAPPRE:ULCUL - Component approval electrical:UL/cUL
CAPPRM:CE - Component approval mechanical:CE
COOL:AIR - Cooling:Air cooled
FREQ:60HZ - Frequency:60 Hz
MOVOL:200V - Supply voltage:200 V
MOVOL:460V - Supply voltage:460 V
CAPPRM:AS1210 - Component approval mechanical:AS1210
CAPPRM:MHLW - Component approval mechanical:MHLW
COOL:WATER - Cooling:Water cooled
IDRY:Y - Integrated dryer:Yes
MOVOL:230V - Supply voltage:230 V
MOVOL:500V - Supply voltage:500 V

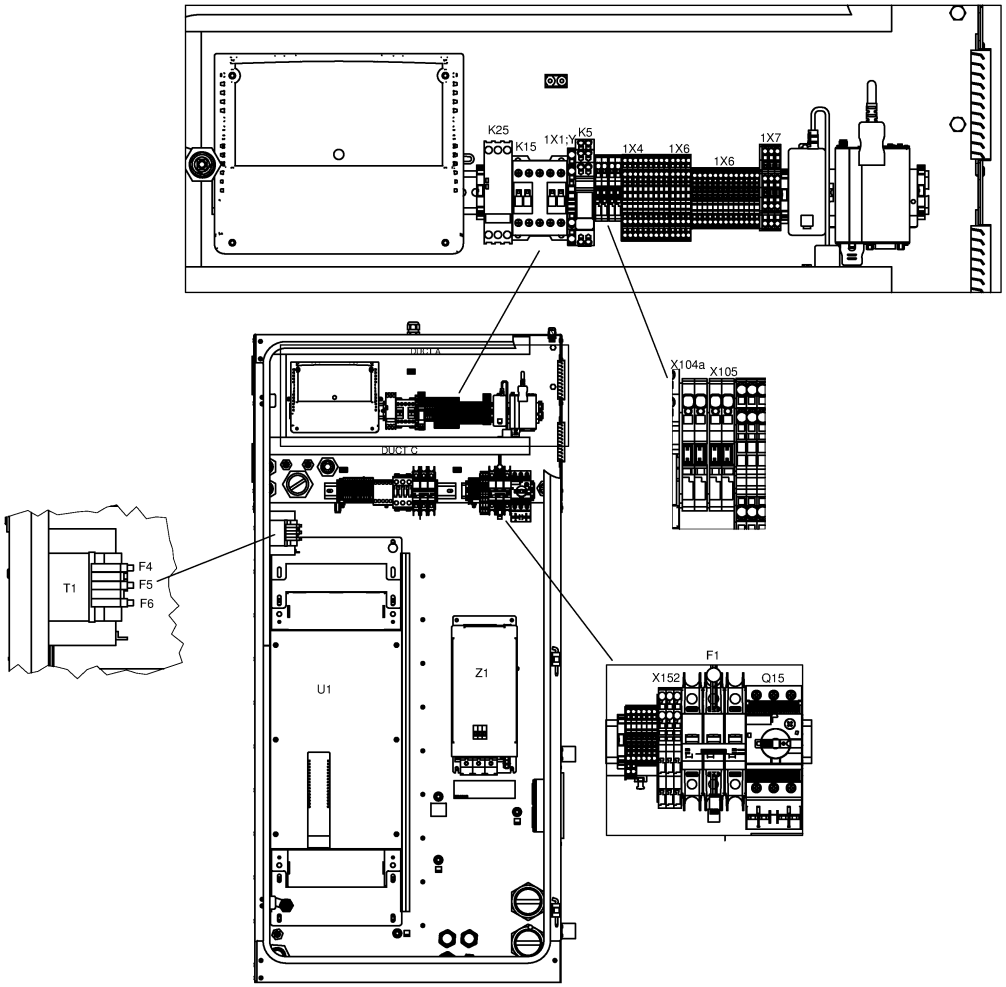
K25
K15
1X1:Y
K5
1X4
1X6
1X6
1X7
DUCT A
DUCT C
X104a
X105
T1
F4
F5
F6
U1
Z1
F1
X152
Q15

21.26 - Cubicle components GA 110 VSD+ - (200V-400V-500V/50Hz, 460V/60Hz - IEC, 230V-460V-575V/60Hz - UL-cUL) - Full-Feature (20/07/2017 - 11/12/2018)

(((MOVOL:200V , MOVOL:400V , MOVOL:500V) + FREQ:50HZ , FREQ:60HZ + MOVOL:460V) + CAPPRE:IEC , (MOVOL:230V , MOVOL:460V , MOVOL:575V) + CAPPRE:ULCUL + FREQ:60HZ) + IDRY:Y + MODEL:GA110VP_16

Ref	Part Number	Qty	Name	Validity	EL
	0989 3700 43	1	NUT	**(20/07/2017 - 20/08/2018)** ((((CAPPRM:AS1210 , CAPPRM:CE , CAPPRM:MHLW , CAPPRM:MOM) + MOVOL:400V , CAPPRM:CE + MOVOL:500V , CAPPRM:MHLW + MOVOL:200V) + FREQ:50HZ , (CAPPRM:ASME , CAPPRM:MHLW) + FREQ:60HZ + MOVOL:460V) + CAPPRE:IEC , (MOVOL:230V , MOVOL:460V , MOVOL:575V) + CAPPRE:ULCUL + CAPPRM:ASME + FREQ:60HZ) + COOL:AIR **(21/08/2018 - 10/12/2018)** ((((CAPPRM:AS1210 , CAPPRM:CE , CAPPRM:MHLW , CAPPRM:MOM) + MOVOL:400V , (CAPPRM:CE + MOVOL:500V , CAPPRM:MHLW + MOVOL:200V) + COOL:AIR) + FREQ:50HZ , (CAPPRM:ASME , CAPPRM:MHLW) + FREQ:60HZ + MOVOL:460V) + CAPPRE:IEC , ((MOVOL:230V , MOVOL:575V) + COOL:AIR , MOVOL:460V) + CAPPRE:ULCUL + CAPPRM:ASME + FREQ:60HZ) **(11/12/2018 - 11/12/2018)** ((((CAPPRM:AS1210 , CAPPRM:CE , CAPPRM:MHLW , CAPPRM:MOM) + MOVOL:400V , (CAPPRM:CE + MOVOL:500V , CAPPRM:MHLW + MOVOL:200V) + COOL:AIR) + FREQ:50HZ , (CAPPRM:ASME , CAPPRM:MHLW) + COOL:WATER + FREQ:60HZ + MOVOL:460V) + CAPPRE:IEC , ((MOVOL:230V , MOVOL:575V) + COOL:AIR , MOVOL:460V) + CAPPRE:ULCUL + CAPPRM:ASME + FREQ:60HZ)	

Electrical legend: Control circuit of T10

Legend:

CAPPRE:IEC - Component approval electrical:IEC
CAPPRE:ULCUL - Component approval electrical:UL/cUL
CAPPRM:AS1210 - Component approval mechanical:AS1210
CAPPRM:ASME - Component approval mechanical:ASME
CAPPRM:CE - Component approval mechanical:CE
CAPPRM:MHLW - Component approval mechanical:MHLW
CAPPRM:MOM - Component approval mechanical:MOM
COOL:AIR - Cooling:Air cooled
COOL:WATER - Cooling:Water cooled
FREQ:50HZ - Frequency:50 Hz
FREQ:60HZ - Frequency:60 Hz
IDRY:Y - Integrated dryer:Yes
MODEL:GA110VP_16 - Model:GA 110VSD+
MOVOL:200V - Supply voltage:200 V
MOVOL:230V - Supply voltage:230 V
MOVOL:400V - Supply voltage:400 V
MOVOL:460V - Supply voltage:460 V
MOVOL:500V - Supply voltage:500 V
MOVOL:575V - Supply voltage:575 V

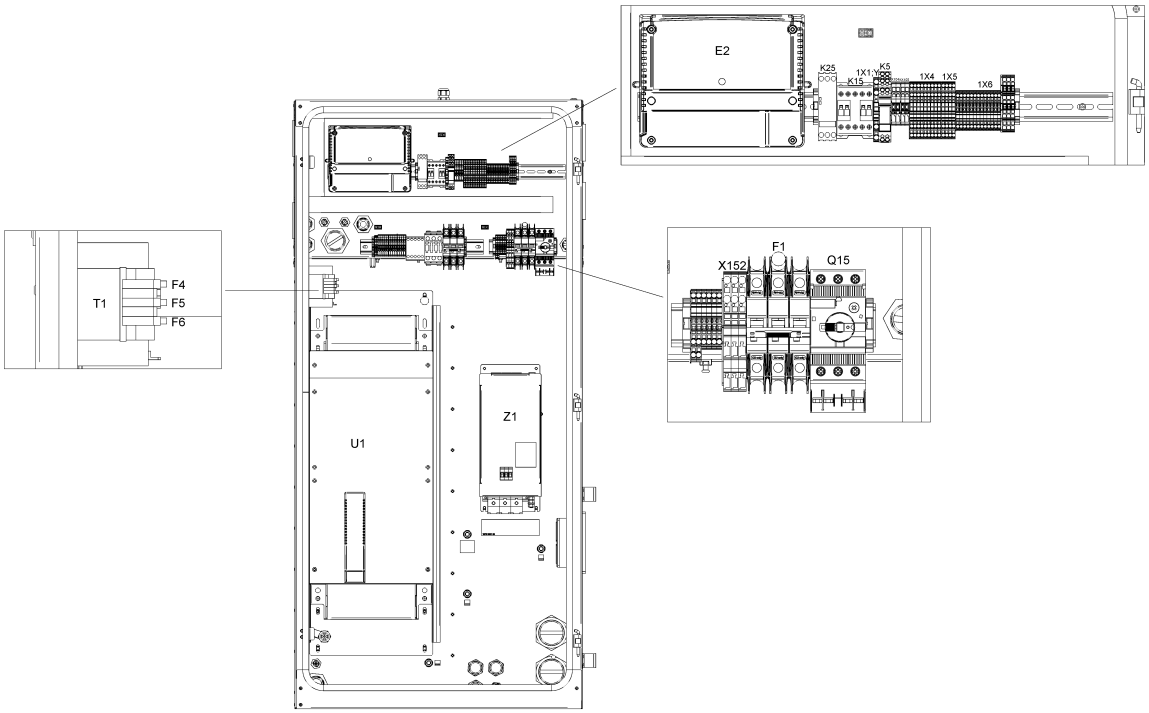
E2
K25
K15
1X1
K5
1X4
1X5
1X6
T1
F4
F5
F6
X152
F1
Q15
U1
Z1

21.27 - Cubicle components GA 110 VSD+ - (200V-400V-500V/50Hz, 460V/60Hz - IEC, 230V-460V-575V/60Hz - UL-cUL) - Full-Feature (12/12/2018 - 04/02/2020)

(((MOVOL:200V , MOVOL:400V , MOVOL:500V) + FREQ:50HZ , FREQ:60HZ + MOVOL:460V) + CAPPRE:IEC , (MOVOL:230V , MOVOL:460V , MOVOL:575V) + CAPPRE:ULCUL + FREQ:60HZ) + IDRY:Y + MODEL:GA110VP_16

Ref	Part Number	Qty	Name	Validity	EL
	1900 2202 36	1	CUBICLE	**(12/12/2018 - 04/02/2020)**	
	9820 3000 31	1	ASSEMBLY DRAWING	**(12/12/2018 - 24/02/2019)** ((((CAPPRM:AS1210 , CAPPRM:CE , CAPPRM:MHLW , CAPPRM:MOM) + MOVOL:400V , (CAPPRM:CE + MOVOL:500V , CAPPRM:MHLW + MOVOL:200V) + COOL:AIR) + FREQ:50HZ , (CAPPRM:ASME , CAPPRM:MHLW) + FREQ:60HZ + MOVOL:460V) + CAPPRE:IEC , ((MOVOL:230V , MOVOL:575V) + COOL:AIR , MOVOL:460V) + CAPPRE:ULCUL + CAPPRM:ASME + FREQ:60HZ) **(25/02/2019 - 04/02/2020)** ((((CAPPRM:AS1210 , CAPPRM:CE , CAPPRM:MHLW , CAPPRM:MOM) + MOVOL:400V , CAPPRM:CE + MOVOL:500V , CAPPRM:MHLW + MOVOL:200V) + FREQ:50HZ , (CAPPRM:ASME , CAPPRM:MHLW) + FREQ:60HZ + MOVOL:460V) + CAPPRE:IEC , (MOVOL:230V , MOVOL:460V , MOVOL:575V) + CAPPRE:ULCUL + CAPPRM:ASME + FREQ:60HZ) + COOL:AIR **(05/02/2020 - 30/12/2027)** (CAPPRE:IEC + CAPPRM:MHLW + FREQ:50HZ + MOVOL:200V , CAPPRE:ULCUL + CAPPRM:ASME + FREQ:60HZ + MOVOL:230V) + COOL:AIR	AD
	9820 3000 27	1	SERVICE DIAGRAM	**(12/12/2018 - 24/02/2019)** ((((CAPPRM:AS1210 , CAPPRM:CE , CAPPRM:MHLW , CAPPRM:MOM) + MOVOL:400V , (CAPPRM:CE + MOVOL:500V , CAPPRM:MHLW + MOVOL:200V) + COOL:AIR) + FREQ:50HZ , (CAPPRM:ASME , CAPPRM:MHLW) + FREQ:60HZ + MOVOL:460V) + CAPPRE:IEC , ((MOVOL:230V , MOVOL:575V) + COOL:AIR , MOVOL:460V) + CAPPRE:ULCUL + CAPPRM:ASME + FREQ:60HZ) **(25/02/2019 - 04/02/2020)** ((((CAPPRM:AS1210 , CAPPRM:CE , CAPPRM:MHLW , CAPPRM:MOM) + MOVOL:400V , CAPPRM:CE + MOVOL:500V , CAPPRM:MHLW + MOVOL:200V) + FREQ:50HZ , (CAPPRM:ASME , CAPPRM:MHLW) + FREQ:60HZ + MOVOL:460V) + CAPPRE:IEC , (MOVOL:230V , MOVOL:460V , MOVOL:575V) + CAPPRE:ULCUL + CAPPRM:ASME + FREQ:60HZ) + COOL:AIR **(05/02/2020 - 30/12/2027)** (CAPPRE:IEC + CAPPRM:MHLW + FREQ:50HZ + MOVOL:200V , CAPPRE:ULCUL + CAPPRM:ASME + FREQ:60HZ + MOVOL:230V) + COOL:AIR	SD
	1622 3798 72	1	WIRE HARNESS	**(12/12/2018 - 24/02/2019)** ((((CAPPRM:AS1210 , CAPPRM:CE , CAPPRM:MHLW , CAPPRM:MOM) + MOVOL:400V , (CAPPRM:CE + MOVOL:500V , CAPPRM:MHLW + MOVOL:200V) + COOL:AIR) + FREQ:50HZ , (CAPPRM:ASME , CAPPRM:MHLW) + FREQ:60HZ + MOVOL:460V) + CAPPRE:IEC , ((MOVOL:230V , MOVOL:575V) + COOL:AIR , MOVOL:460V) + CAPPRE:ULCUL + CAPPRM:ASME + FREQ:60HZ) **(25/02/2019 - 04/02/2020)** ((((CAPPRM:AS1210 , CAPPRM:CE , CAPPRM:MHLW , CAPPRM:MOM) + MOVOL:400V , CAPPRM:CE + MOVOL:500V , CAPPRM:MHLW + MOVOL:200V) + FREQ:50HZ , (CAPPRM:ASME , CAPPRM:MHLW) + FREQ:60HZ + MOVOL:460V) + CAPPRE:IEC , (MOVOL:230V , MOVOL:460V , MOVOL:575V) + CAPPRE:ULCUL + CAPPRM:ASME + FREQ:60HZ) + COOL:AIR **(05/02/2020 - 30/12/2027)** (CAPPRE:IEC + CAPPRM:MHLW + FREQ:50HZ + MOVOL:200V , CAPPRE:ULCUL + CAPPRM:ASME + FREQ:60HZ + MOVOL:230V) + COOL:AIR	Comm Cable

Legend:

CAPPRE:IEC - Component approval electrical:IEC
CAPPRE:ULCUL - Component approval electrical:UL/cUL
CAPPRM:AS1210 - Component approval mechanical:AS1210
CAPPRM:ASME - Component approval mechanical:ASME
CAPPRM:CE - Component approval mechanical:CE
CAPPRM:MHLW - Component approval mechanical:MHLW
CAPPRM:MOM - Component approval mechanical:MOM
COOL:AIR - Cooling:Air cooled
FREQ:50HZ - Frequency:50 Hz
FREQ:60HZ - Frequency:60 Hz
IDRY:Y - Integrated dryer:Yes
MODEL:GA110VP_16 - Model:GA 110VSD+
MOVOL:200V - Supply voltage:200 V
MOVOL:230V - Supply voltage:230 V
MOVOL:400V - Supply voltage:400 V
MOVOL:460V - Supply voltage:460 V
MOVOL:500V - Supply voltage:500 V
MOVOL:575V - Supply voltage:575 V

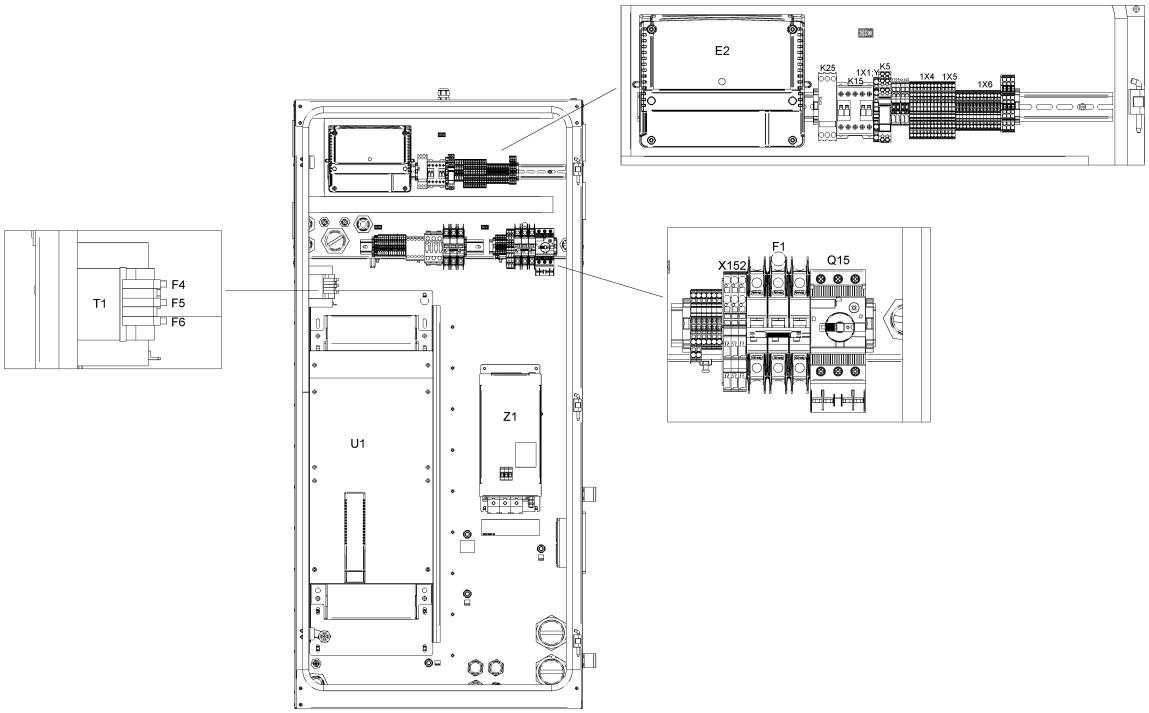
E2
K25
K15
1X1
K5
1X4
1X5
1X6
T1
F4
F5
F6
X152
F1
Q15
U1
Z1

21.27 - Cubicle components GA 110 VSD+ - (200V-400V-500V/50Hz, 460V/60Hz - IEC, 230V-460V-575V/60Hz - UL-cUL) - Full-Feature (12/12/2018 - 04/02/2020)

(((MOVOL:200V , MOVOL:400V , MOVOL:500V) + FREQ:50HZ , FREQ:60HZ + MOVOL:460V) + CAPPRE:IEC , (MOVOL:230V , MOVOL:460V , MOVOL:575V) + CAPPRE:ULCUL + FREQ:60HZ) + IDRY:Y + MODEL:GA110VP_16

Ref	Part Number	Qty	Name	Validity	EL
	1622 5099 04	1	DI CHANE CABLE (1400MM)	**(12/12/2018 - 24/02/2019)** ((((CAPPRM:AS1210 , CAPPRM:CE , CAPPRM:MHLW , CAPPRM:MOM) + MOVOL:400V , (CAPPRM:CE + MOVOL:500V , CAPPRM:MHLW + MOVOL:200V) + COOL:AIR) + FREQ:50HZ , (CAPPRM:ASME , CAPPRM:MHLW) + FREQ:60HZ + MOVOL:460V) + CAPPRE:IEC , ((MOVOL:230V , MOVOL:575V) + COOL:AIR , MOVOL:460V) + CAPPRE:ULCUL + CAPPRM:ASME + FREQ:60HZ) **(25/02/2019 - 04/02/2020)** ((((CAPPRM:AS1210 , CAPPRM:CE , CAPPRM:MHLW , CAPPRM:MOM) + MOVOL:400V , CAPPRM:CE + MOVOL:500V , CAPPRM:MHLW + MOVOL:200V) + FREQ:50HZ , (CAPPRM:ASME , CAPPRM:MHLW) + FREQ:60HZ + MOVOL:460V) + CAPPRE:IEC , (MOVOL:230V , MOVOL:460V , MOVOL:575V) + CAPPRE:ULCUL + CAPPRM:ASME + FREQ:60HZ) + COOL:AIR **(05/02/2020 - 30/12/2027)** (CAPPRE:IEC + CAPPRM:MHLW + FREQ:50HZ + MOVOL:200V , CAPPRE:ULCUL + CAPPRM:ASME + FREQ:60HZ + MOVOL:230V) + COOL:AIR	
	Electrical legend:	Comm Cable Loose supply			
	1649 8001 22	1	CUBICLE	**(12/12/2018 - 24/02/2019)** ((((CAPPRM:AS1210 , CAPPRM:CE , CAPPRM:MHLW , CAPPRM:MOM) + MOVOL:400V , (CAPPRM:CE + MOVOL:500V , CAPPRM:MHLW + MOVOL:200V) + COOL:AIR) + FREQ:50HZ , (CAPPRM:ASME , CAPPRM:MHLW) + FREQ:60HZ + MOVOL:460V) + CAPPRE:IEC , ((MOVOL:230V , MOVOL:575V) + COOL:AIR , MOVOL:460V) + CAPPRE:ULCUL + CAPPRM:ASME + FREQ:60HZ) **(25/02/2019 - 04/02/2020)** ((((CAPPRM:AS1210 , CAPPRM:CE , CAPPRM:MHLW , CAPPRM:MOM) + MOVOL:400V , CAPPRM:CE + MOVOL:500V , CAPPRM:MHLW + MOVOL:200V) + FREQ:50HZ , (CAPPRM:ASME , CAPPRM:MHLW) + FREQ:60HZ + MOVOL:460V) + CAPPRE:IEC , (MOVOL:230V , MOVOL:460V , MOVOL:575V) + CAPPRE:ULCUL + CAPPRM:ASME + FREQ:60HZ) + COOL:AIR **(05/02/2020 - 30/12/2027)** (CAPPRE:IEC + CAPPRM:MHLW + FREQ:50HZ + MOVOL:200V , CAPPRE:ULCUL + CAPPRM:ASME + FREQ:60HZ + MOVOL:230V) + COOL:AIR	MSA
	1649 8001 31	1	PLATE NEOS "E"	**(12/12/2018 - 24/02/2019)** ((((CAPPRM:AS1210 , CAPPRM:CE , CAPPRM:MHLW , CAPPRM:MOM) + MOVOL:400V , (CAPPRM:CE + MOVOL:500V , CAPPRM:MHLW + MOVOL:200V) + COOL:AIR) + FREQ:50HZ , (CAPPRM:ASME , CAPPRM:MHLW) + FREQ:60HZ + MOVOL:460V) + CAPPRE:IEC , ((MOVOL:230V , MOVOL:575V) + COOL:AIR , MOVOL:460V) + CAPPRE:ULCUL + CAPPRM:ASME + FREQ:60HZ) **(25/02/2019 - 04/02/2020)** ((((CAPPRM:AS1210 , CAPPRM:CE , CAPPRM:MHLW , CAPPRM:MOM) + MOVOL:400V , CAPPRM:CE + MOVOL:500V , CAPPRM:MHLW + MOVOL:200V) + FREQ:50HZ , (CAPPRM:ASME , CAPPRM:MHLW) + FREQ:60HZ + MOVOL:460V) + CAPPRE:IEC , (MOVOL:230V , MOVOL:460V , MOVOL:575V) + CAPPRE:ULCUL + CAPPRM:ASME + FREQ:60HZ) + COOL:AIR **(05/02/2020 - 30/12/2027)** (CAPPRE:IEC + CAPPRM:MHLW + FREQ:50HZ + MOVOL:200V , CAPPRE:ULCUL + CAPPRM:ASME + FREQ:60HZ + MOVOL:230V) + COOL:AIR	
	Electrical legend:	Mounting plate			

Legend:

CAPPRE:IEC - Component approval electrical:IEC
CAPPRE:ULCUL - Component approval electrical:UL/cUL
CAPPRM:AS1210 - Component approval mechanical:AS1210
CAPPRM:ASME - Component approval mechanical:ASME
CAPPRM:CE - Component approval mechanical:CE
CAPPRM:MHLW - Component approval mechanical:MHLW
CAPPRM:MOM - Component approval mechanical:MOM
COOL:AIR - Cooling:Air cooled
FREQ:50HZ - Frequency:50 Hz
FREQ:60HZ - Frequency:60 Hz
IDRY:Y - Integrated dryer:Yes
MODEL:GA110VP_16 - Model:GA 110VSD+
MOVOL:200V - Supply voltage:200 V
MOVOL:230V - Supply voltage:230 V
MOVOL:400V - Supply voltage:400 V
MOVOL:460V - Supply voltage:460 V
MOVOL:500V - Supply voltage:500 V
MOVOL:575V - Supply voltage:575 V

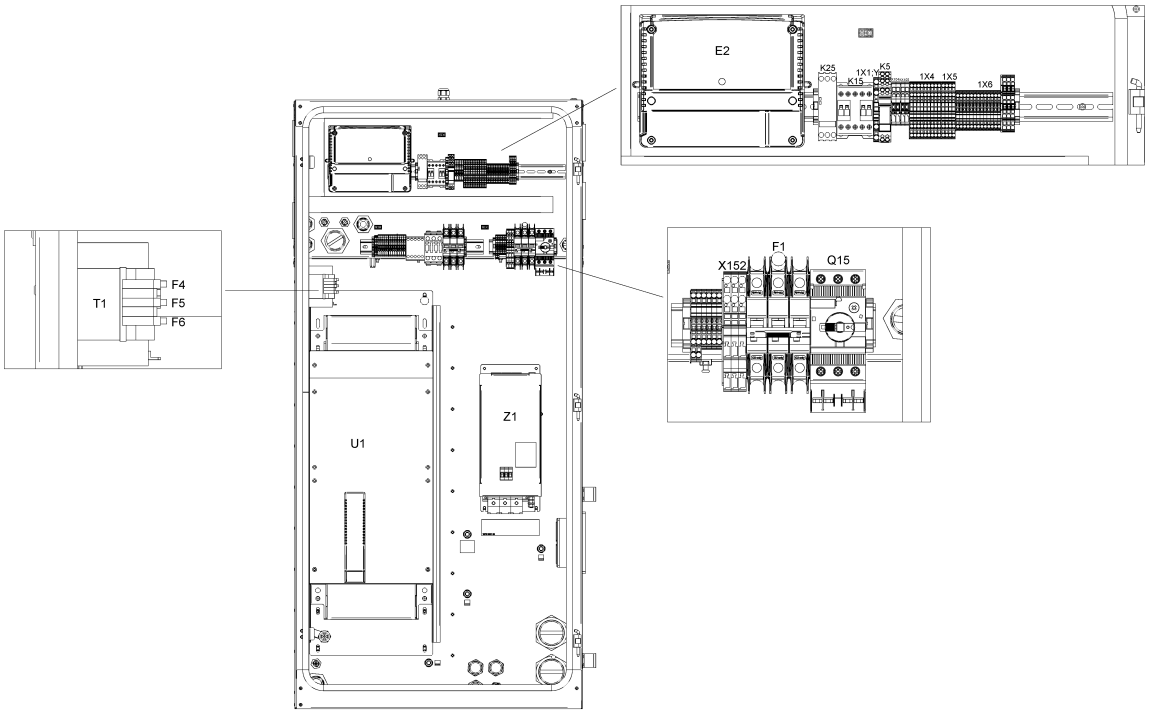
E2
K25
K15
1X1
K5
1X4
1X5
1X6
T1
F4
F5
F6
X152
F1
Q15
U1
Z1

21.27 - Cubicle components GA 110 VSD+ - (200V-400V-500V/50Hz, 460V/60Hz - IEC, 230V-460V-575V/60Hz - UL-cUL) - Full-Feature (12/12/2018 - 04/02/2020)

(((MOVOL:200V , MOVOL:400V , MOVOL:500V) + FREQ:50HZ , FREQ:60HZ + MOVOL:460V) + CAPPRE:IEC , (MOVOL:230V , MOVOL:460V , MOVOL:575V) + CAPPRE:ULCUL + FREQ:60HZ) + IDRY:Y + MODEL:GA110VP_16

Ref	Part Number	Qty	Name	Validity	EL
	1649 8003 85	1	MOUNTING PLATE	**(12/12/2018 - 24/02/2019)** ((((CAPPRM:AS1210 , CAPPRM:CE , CAPPRM:MHLW , CAPPRM:MOM) + MOVOL:400V , (CAPPRM:CE + MOVOL:500V , CAPPRM:MHLW + MOVOL:200V) + COOL:AIR) + FREQ:50HZ , (CAPPRM:ASME , CAPPRM:MHLW) + FREQ:60HZ + MOVOL:460V) + CAPPRE:IEC , ((MOVOL:230V , MOVOL:575V) + COOL:AIR , MOVOL:460V) + CAPPRE:ULCUL + CAPPRM:ASME + FREQ:60HZ) **(25/02/2019 - 04/02/2020)** ((((CAPPRM:AS1210 , CAPPRM:CE , CAPPRM:MHLW , CAPPRM:MOM) + MOVOL:400V , CAPPRM:CE + MOVOL:500V , CAPPRM:MHLW + MOVOL:200V) + FREQ:50HZ , (CAPPRM:ASME , CAPPRM:MHLW) + FREQ:60HZ + MOVOL:460V) + CAPPRE:IEC , (MOVOL:230V , MOVOL:460V , MOVOL:575V) + CAPPRE:ULCUL + CAPPRM:ASME + FREQ:60HZ) + COOL:AIR **(05/02/2020 - 30/12/2027)** (CAPPRE:IEC + CAPPRM:MHLW + FREQ:50HZ + MOVOL:200V , CAPPRE:ULCUL + CAPPRM:ASME + FREQ:60HZ + MOVOL:230V) + COOL:AIR	
	Electrical legend:	Mounting plate			
	1649 8002 39	1	WIRE HARNESS	**(12/12/2018 - 24/02/2019)** ((((CAPPRM:AS1210 , CAPPRM:CE , CAPPRM:MHLW , CAPPRM:MOM) + MOVOL:400V , (CAPPRM:CE + MOVOL:500V , CAPPRM:MHLW + MOVOL:200V) + COOL:AIR) + FREQ:50HZ , (CAPPRM:ASME , CAPPRM:MHLW) + FREQ:60HZ + MOVOL:460V) + CAPPRE:IEC , ((MOVOL:230V , MOVOL:575V) + COOL:AIR , MOVOL:460V) + CAPPRE:ULCUL + CAPPRM:ASME + FREQ:60HZ) **(25/02/2019 - 04/02/2020)** ((((CAPPRM:AS1210 , CAPPRM:CE , CAPPRM:MHLW , CAPPRM:MOM) + MOVOL:400V , CAPPRM:CE + MOVOL:500V , CAPPRM:MHLW + MOVOL:200V) + FREQ:50HZ , (CAPPRM:ASME , CAPPRM:MHLW) + FREQ:60HZ + MOVOL:460V) + CAPPRE:IEC , (MOVOL:230V , MOVOL:460V , MOVOL:575V) + CAPPRE:ULCUL + CAPPRM:ASME + FREQ:60HZ) + COOL:AIR **(05/02/2020 - 30/12/2027)** (CAPPRE:IEC + CAPPRM:MHLW + FREQ:50HZ + MOVOL:200V , CAPPRE:ULCUL + CAPPRM:ASME + FREQ:60HZ + MOVOL:230V) + COOL:AIR	WH
	1649 8002 40	1	WIRE HARNESS	**(12/12/2018 - 24/02/2019)** ((((CAPPRM:AS1210 , CAPPRM:CE , CAPPRM:MHLW , CAPPRM:MOM) + MOVOL:400V , (CAPPRM:CE + MOVOL:500V , CAPPRM:MHLW + MOVOL:200V) + COOL:AIR) + FREQ:50HZ , (CAPPRM:ASME , CAPPRM:MHLW) + FREQ:60HZ + MOVOL:460V) + CAPPRE:IEC , ((MOVOL:230V , MOVOL:575V) + COOL:AIR , MOVOL:460V) + CAPPRE:ULCUL + CAPPRM:ASME + FREQ:60HZ) **(25/02/2019 - 04/02/2020)** ((((CAPPRM:AS1210 , CAPPRM:CE , CAPPRM:MHLW , CAPPRM:MOM) + MOVOL:400V , CAPPRM:CE + MOVOL:500V , CAPPRM:MHLW + MOVOL:200V) + FREQ:50HZ , (CAPPRM:ASME , CAPPRM:MHLW) + FREQ:60HZ + MOVOL:460V) + CAPPRE:IEC , (MOVOL:230V , MOVOL:460V , MOVOL:575V) + CAPPRE:ULCUL + CAPPRM:ASME + FREQ:60HZ) + COOL:AIR **(05/02/2020 - 30/12/2027)** (CAPPRE:IEC + CAPPRM:MHLW + FREQ:50HZ + MOVOL:200V , CAPPRE:ULCUL + CAPPRM:ASME + FREQ:60HZ + MOVOL:230V) + COOL:AIR	WH

Legend:

CAPPRE:IEC - Component approval electrical:IEC
CAPPRE:ULCUL - Component approval electrical:UL/cUL
CAPPRM:AS1210 - Component approval mechanical:AS1210
CAPPRM:ASME - Component approval mechanical:ASME
CAPPRM:CE - Component approval mechanical:CE
CAPPRM:MHLW - Component approval mechanical:MHLW
CAPPRM:MOM - Component approval mechanical:MOM
COOL:AIR - Cooling:Air cooled
FREQ:50HZ - Frequency:50 Hz
FREQ:60HZ - Frequency:60 Hz
IDRY:Y - Integrated dryer:Yes
MODEL:GA110VP_16 - Model:GA 110VSD+
MOVOL:200V - Supply voltage:200 V
MOVOL:230V - Supply voltage:230 V
MOVOL:400V - Supply voltage:400 V
MOVOL:460V - Supply voltage:460 V
MOVOL:500V - Supply voltage:500 V
MOVOL:575V - Supply voltage:575 V

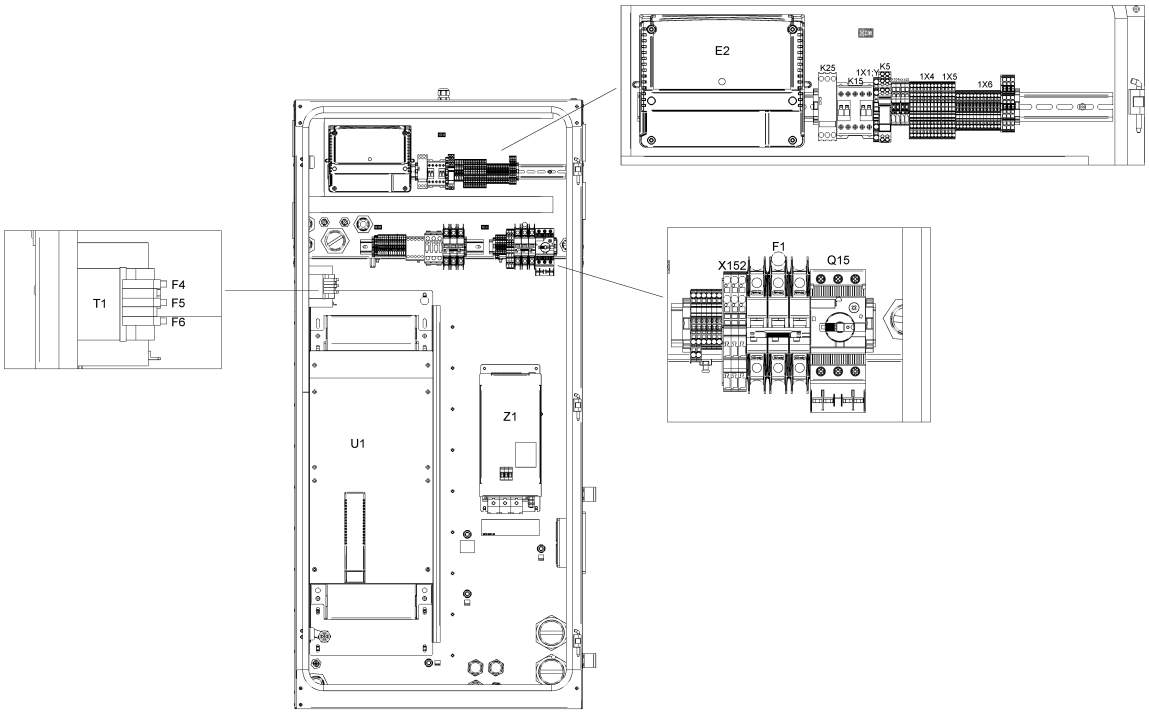
E2
K25
K15
1X1
K5
1X4
1X5
1X6
T1
F4
F5
F6
X152
F1
Q15
U1
Z1

21.27 - Cubicle components GA 110 VSD+ - (200V-400V-500V/50Hz, 460V/60Hz - IEC, 230V-460V-575V/60Hz - UL-cUL) - Full-Feature (12/12/2018 - 04/02/2020)

(((MOVOL:200V , MOVOL:400V , MOVOL:500V) + FREQ:50HZ , FREQ:60HZ + MOVOL:460V) + CAPPRE:IEC , (MOVOL:230V , MOVOL:460V , MOVOL:575V) + CAPPRE:ULCUL + FREQ:60HZ) + IDRY:Y + MODEL:GA110VP_16

Ref	Part Number	Qty	Name	Validity	EL
	1649 8002 72	1	CABLE POWER	**(12/12/2018 - 24/02/2019)** ((((CAPPRM:AS1210 , CAPPRM:CE , CAPPRM:MHLW , CAPPRM:MOM) + MOVOL:400V , (CAPPRM:CE + MOVOL:500V , CAPPRM:MHLW + MOVOL:200V) + COOL:AIR) + FREQ:50HZ , (CAPPRM:ASME , CAPPRM:MHLW) + FREQ:60HZ + MOVOL:460V) + CAPPRE:IEC , ((MOVOL:230V , MOVOL:575V) + COOL:AIR , MOVOL:460V) + CAPPRE:ULCUL + CAPPRM:ASME + FREQ:60HZ) **(25/02/2019 - 04/02/2020)** ((((CAPPRM:AS1210 , CAPPRM:CE , CAPPRM:MHLW , CAPPRM:MOM) + MOVOL:400V , CAPPRM:CE + MOVOL:500V , CAPPRM:MHLW + MOVOL:200V) + FREQ:50HZ , (CAPPRM:ASME , CAPPRM:MHLW) + FREQ:60HZ + MOVOL:460V) + CAPPRE:IEC , (MOVOL:230V , MOVOL:460V , MOVOL:575V) + CAPPRE:ULCUL + CAPPRM:ASME + FREQ:60HZ) + COOL:AIR **(05/02/2020 - 30/12/2027)** (CAPPRE:IEC + CAPPRM:MHLW + FREQ:50HZ + MOVOL:200V , CAPPRE:ULCUL + CAPPRM:ASME + FREQ:60HZ + MOVOL:230V) + COOL:AIR	
	Electrical legend:	Full feature (FF) Drain			
	1649 8002 73	1	WIRE HARNESS	**(12/12/2018 - 24/02/2019)** ((((CAPPRM:AS1210 , CAPPRM:CE , CAPPRM:MHLW , CAPPRM:MOM) + MOVOL:400V , (CAPPRM:CE + MOVOL:500V , CAPPRM:MHLW + MOVOL:200V) + COOL:AIR) + FREQ:50HZ , (CAPPRM:ASME , CAPPRM:MHLW) + FREQ:60HZ + MOVOL:460V) + CAPPRE:IEC , ((MOVOL:230V , MOVOL:575V) + COOL:AIR , MOVOL:460V) + CAPPRE:ULCUL + CAPPRM:ASME + FREQ:60HZ) **(25/02/2019 - 04/02/2020)** ((((CAPPRM:AS1210 , CAPPRM:CE , CAPPRM:MHLW , CAPPRM:MOM) + MOVOL:400V , CAPPRM:CE + MOVOL:500V , CAPPRM:MHLW + MOVOL:200V) + FREQ:50HZ , (CAPPRM:ASME , CAPPRM:MHLW) + FREQ:60HZ + MOVOL:460V) + CAPPRE:IEC , (MOVOL:230V , MOVOL:460V , MOVOL:575V) + CAPPRE:ULCUL + CAPPRM:ASME + FREQ:60HZ) + COOL:AIR **(05/02/2020 - 30/12/2027)** (CAPPRE:IEC + CAPPRM:MHLW + FREQ:50HZ + MOVOL:200V , CAPPRE:ULCUL + CAPPRM:ASME + FREQ:60HZ + MOVOL:230V) + COOL:AIR	
	Electrical legend:	Pack Drain + Air filter switch			
	1649 8002 75	1	WIRE HARNESS	**(12/12/2018 - 24/02/2019)** ((((CAPPRM:AS1210 , CAPPRM:CE , CAPPRM:MHLW , CAPPRM:MOM) + MOVOL:400V , (CAPPRM:CE + MOVOL:500V , CAPPRM:MHLW + MOVOL:200V) + COOL:AIR) + FREQ:50HZ , (CAPPRM:ASME , CAPPRM:MHLW) + FREQ:60HZ + MOVOL:460V) + CAPPRE:IEC , ((MOVOL:230V , MOVOL:575V) + COOL:AIR , MOVOL:460V) + CAPPRE:ULCUL + CAPPRM:ASME + FREQ:60HZ) **(25/02/2019 - 04/02/2020)** ((((CAPPRM:AS1210 , CAPPRM:CE , CAPPRM:MHLW , CAPPRM:MOM) + MOVOL:400V , CAPPRM:CE + MOVOL:500V , CAPPRM:MHLW + MOVOL:200V) + FREQ:50HZ , (CAPPRM:ASME , CAPPRM:MHLW) + FREQ:60HZ + MOVOL:460V) + CAPPRE:IEC , (MOVOL:230V , MOVOL:460V , MOVOL:575V) + CAPPRE:ULCUL + CAPPRM:ASME + FREQ:60HZ) + COOL:AIR **(05/02/2020 - 30/12/2027)** (CAPPRE:IEC + CAPPRM:MHLW + FREQ:50HZ + MOVOL:200V , CAPPRE:ULCUL + CAPPRM:ASME + FREQ:60HZ + MOVOL:230V) + COOL:AIR	
	Electrical legend:	Relative Humidity sensor			

Legend:

CAPPRE:IEC - Component approval electrical:IEC
CAPPRE:ULCUL - Component approval electrical:UL/cUL
CAPPRM:AS1210 - Component approval mechanical:AS1210
CAPPRM:ASME - Component approval mechanical:ASME
CAPPRM:CE - Component approval mechanical:CE
CAPPRM:MHLW - Component approval mechanical:MHLW
CAPPRM:MOM - Component approval mechanical:MOM
COOL:AIR - Cooling:Air cooled
FREQ:50HZ - Frequency:50 Hz
FREQ:60HZ - Frequency:60 Hz
IDRY:Y - Integrated dryer:Yes
MODEL:GA110VP_16 - Model:GA 110VSD+
MOVOL:200V - Supply voltage:200 V
MOVOL:230V - Supply voltage:230 V
MOVOL:400V - Supply voltage:400 V
MOVOL:460V - Supply voltage:460 V
MOVOL:500V - Supply voltage:500 V
MOVOL:575V - Supply voltage:575 V

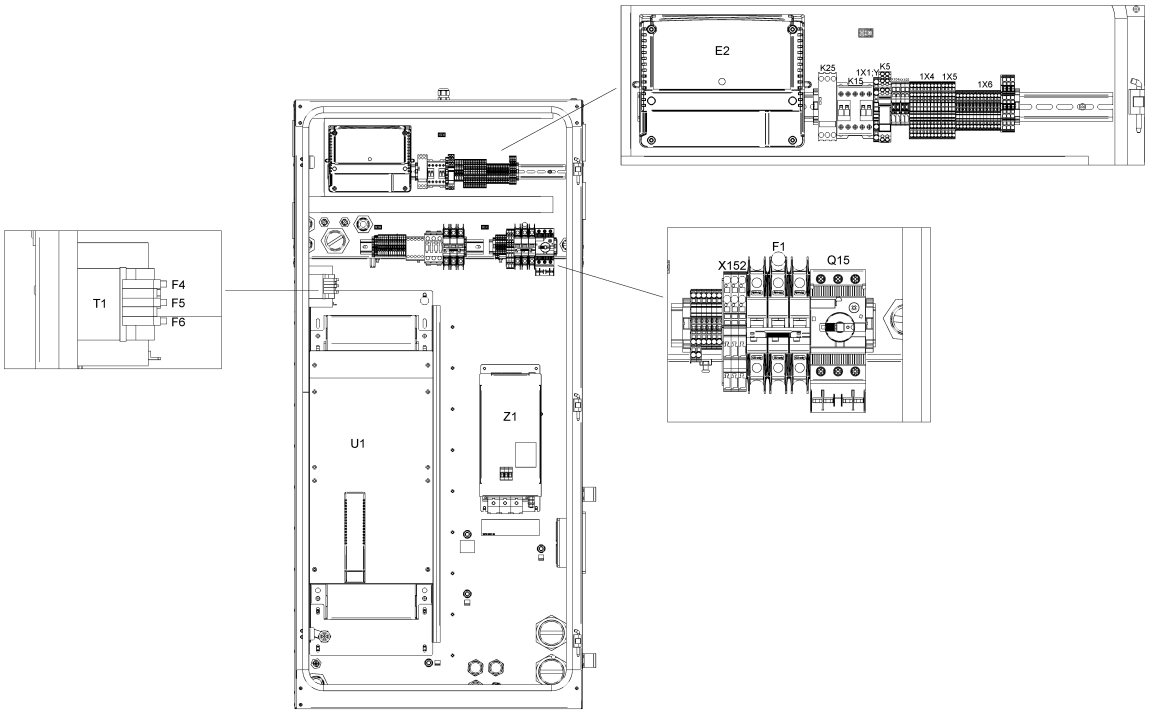
E2
K25
K15
1X1
K5
1X4
1X5
1X6
T1
F4
F5
F6
X152
F1
Q15
U1
Z1

21.27 - Cubicle components GA 110 VSD+ - (200V-400V-500V/50Hz, 460V/60Hz - IEC, 230V-460V-575V/60Hz - UL-cUL) - Full-Feature (12/12/2018 - 04/02/2020)

(((MOVOL:200V , MOVOL:400V , MOVOL:500V) + FREQ:50HZ , FREQ:60HZ + MOVOL:460V) + CAPPRE:IEC , (MOVOL:230V , MOVOL:460V , MOVOL:575V) + CAPPRE:ULCUL + FREQ:60HZ) + IDRY:Y + MODEL:GA110VP_16

Ref	Part Number	Qty	Name	Validity	EL
	1649 8001 43	3	MOTOR CABLE	**(12/12/2018 - 24/02/2019)** ((((CAPPRM:AS1210 , CAPPRM:CE , CAPPRM:MHLW , CAPPRM:MOM) + MOVOL:400V , (CAPPRM:CE + MOVOL:500V , CAPPRM:MHLW + MOVOL:200V) + COOL:AIR) + FREQ:50HZ , (CAPPRM:ASME , CAPPRM:MHLW) + FREQ:60HZ + MOVOL:460V) + CAPPRE:IEC , ((MOVOL:230V , MOVOL:575V) + COOL:AIR , MOVOL:460V) + CAPPRE:ULCUL + CAPPRM:ASME + FREQ:60HZ) **(25/02/2019 - 04/02/2020)** ((((CAPPRM:AS1210 , CAPPRM:CE , CAPPRM:MHLW , CAPPRM:MOM) + MOVOL:400V , CAPPRM:CE + MOVOL:500V , CAPPRM:MHLW + MOVOL:200V) + FREQ:50HZ , (CAPPRM:ASME , CAPPRM:MHLW) + FREQ:60HZ + MOVOL:460V) + CAPPRE:IEC , (MOVOL:230V , MOVOL:460V , MOVOL:575V) + CAPPRE:ULCUL + CAPPRM:ASME + FREQ:60HZ) + COOL:AIR **(05/02/2020 - 30/12/2027)** (CAPPRE:IEC + CAPPRM:MHLW + FREQ:50HZ + MOVOL:200V , CAPPRE:ULCUL + CAPPRM:ASME + FREQ:60HZ + MOVOL:230V) + COOL:AIR	
	Electrical legend:	Motor conduit			
	1649 8001 46	1	MOTOR CABLE	**(12/12/2018 - 24/02/2019)** ((((CAPPRM:AS1210 , CAPPRM:CE , CAPPRM:MHLW , CAPPRM:MOM) + MOVOL:400V , (CAPPRM:CE + MOVOL:500V , CAPPRM:MHLW + MOVOL:200V) + COOL:AIR) + FREQ:50HZ , (CAPPRM:ASME , CAPPRM:MHLW) + FREQ:60HZ + MOVOL:460V) + CAPPRE:IEC , ((MOVOL:230V , MOVOL:575V) + COOL:AIR , MOVOL:460V) + CAPPRE:ULCUL + CAPPRM:ASME + FREQ:60HZ) **(25/02/2019 - 04/02/2020)** ((((CAPPRM:AS1210 , CAPPRM:CE , CAPPRM:MHLW , CAPPRM:MOM) + MOVOL:400V , CAPPRM:CE + MOVOL:500V , CAPPRM:MHLW + MOVOL:200V) + FREQ:50HZ , (CAPPRM:ASME , CAPPRM:MHLW) + FREQ:60HZ + MOVOL:460V) + CAPPRE:IEC , (MOVOL:230V , MOVOL:460V , MOVOL:575V) + CAPPRE:ULCUL + CAPPRM:ASME + FREQ:60HZ) + COOL:AIR **(05/02/2020 - 30/12/2027)** (CAPPRE:IEC + CAPPRM:MHLW + FREQ:50HZ + MOVOL:200V , CAPPRE:ULCUL + CAPPRM:ASME + FREQ:60HZ + MOVOL:230V) + COOL:AIR	
	Electrical legend:	Motor conduit			
		1	DATALABEL	**(12/12/2018 - 24/02/2019)** ((((CAPPRM:AS1210 , CAPPRM:CE , CAPPRM:MHLW , CAPPRM:MOM) + MOVOL:400V , (CAPPRM:CE + MOVOL:500V , CAPPRM:MHLW + MOVOL:200V) + COOL:AIR) + FREQ:50HZ , (CAPPRM:ASME , CAPPRM:MHLW) + FREQ:60HZ + MOVOL:460V) + CAPPRE:IEC , ((MOVOL:230V , MOVOL:575V) + COOL:AIR , MOVOL:460V) + CAPPRE:ULCUL + CAPPRM:ASME + FREQ:60HZ) **(25/02/2019 - 04/02/2020)** ((((CAPPRM:AS1210 , CAPPRM:CE , CAPPRM:MHLW , CAPPRM:MOM) + MOVOL:400V , CAPPRM:CE + MOVOL:500V , CAPPRM:MHLW + MOVOL:200V) + FREQ:50HZ , (CAPPRM:ASME , CAPPRM:MHLW) + FREQ:60HZ + MOVOL:460V) + CAPPRE:IEC , (MOVOL:230V , MOVOL:460V , MOVOL:575V) + CAPPRE:ULCUL + CAPPRM:ASME + FREQ:60HZ) + COOL:AIR **(05/02/2020 - 30/12/2027)** (CAPPRE:IEC + CAPPRM:MHLW + FREQ:50HZ + MOVOL:200V , CAPPRE:ULCUL + CAPPRM:ASME + FREQ:60HZ + MOVOL:230V) + COOL:AIR	Label

Legend:

CAPPRE:IEC - Component approval electrical:IEC
CAPPRE:ULCUL - Component approval electrical:UL/cUL
CAPPRM:AS1210 - Component approval mechanical:AS1210
CAPPRM:ASME - Component approval mechanical:ASME
CAPPRM:CE - Component approval mechanical:CE
CAPPRM:MHLW - Component approval mechanical:MHLW
CAPPRM:MOM - Component approval mechanical:MOM
COOL:AIR - Cooling:Air cooled
FREQ:50HZ - Frequency:50 Hz
FREQ:60HZ - Frequency:60 Hz
IDRY:Y - Integrated dryer:Yes
MODEL:GA110VP_16 - Model:GA 110VSD+
MOVOL:200V - Supply voltage:200 V
MOVOL:230V - Supply voltage:230 V
MOVOL:400V - Supply voltage:400 V
MOVOL:460V - Supply voltage:460 V
MOVOL:500V - Supply voltage:500 V
MOVOL:575V - Supply voltage:575 V

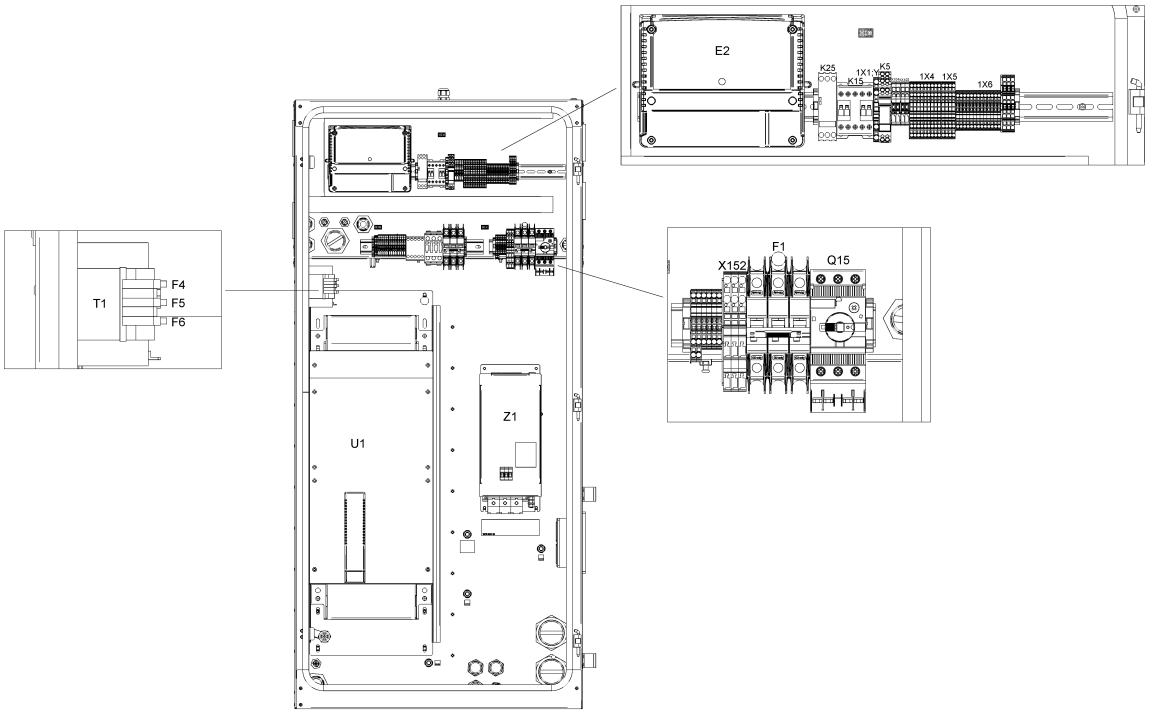
E2
K25
K15
1X1
K5
1X4
1X5
1X6
T1
F4
F5
F6
X152
F1
Q15
U1
Z1

21.27 - Cubicle components GA 110 VSD+ - (200V-400V-500V/50Hz, 460V/60Hz - IEC, 230V-460V-575V/60Hz - UL-cUL) - Full-Feature (12/12/2018 - 04/02/2020)

(((MOVOL:200V , MOVOL:400V , MOVOL:500V) + FREQ:50HZ , FREQ:60HZ + MOVOL:460V) + CAPPRE:IEC , (MOVOL:230V , MOVOL:460V , MOVOL:575V) + CAPPRE:ULCUL + FREQ:60HZ) + IDRY:Y + MODEL:GA110VP_16

Ref	Part Number	Qty	Name	Validity	EL
	1079 9901 68	1	WARNING LABEL	**(12/12/2018 - 24/02/2019)** ((((CAPPRM:AS1210 , CAPPRM:CE , CAPPRM:MHLW , CAPPRM:MOM) + MOVOL:400V , (CAPPRM:CE + MOVOL:500V , CAPPRM:MHLW + MOVOL:200V) + COOL:AIR) + FREQ:50HZ , (CAPPRM:ASME , CAPPRM:MHLW) + FREQ:60HZ + MOVOL:460V) + CAPPRE:IEC , ((MOVOL:230V , MOVOL:575V) + COOL:AIR , MOVOL:460V) + CAPPRE:ULCUL + CAPPRM:ASME + FREQ:60HZ) **(25/02/2019 - 04/02/2020)** ((((CAPPRM:AS1210 , CAPPRM:CE , CAPPRM:MHLW , CAPPRM:MOM) + MOVOL:400V , CAPPRM:CE + MOVOL:500V , CAPPRM:MHLW + MOVOL:200V) + FREQ:50HZ , (CAPPRM:ASME , CAPPRM:MHLW) + FREQ:60HZ + MOVOL:460V) + CAPPRE:IEC , (MOVOL:230V , MOVOL:460V , MOVOL:575V) + CAPPRE:ULCUL + CAPPRM:ASME + FREQ:60HZ) + COOL:AIR **(05/02/2020 - 30/12/2027)** (CAPPRE:IEC + CAPPRM:MHLW + FREQ:50HZ + MOVOL:200V , CAPPRE:ULCUL + CAPPRM:ASME + FREQ:60HZ + MOVOL:230V) + COOL:AIR	Label
	1649 8005 00	-	LABEL	**(12/12/2018 - 24/02/2019)** ((((CAPPRM:AS1210 , CAPPRM:CE , CAPPRM:MHLW , CAPPRM:MOM) + MOVOL:400V , (CAPPRM:CE + MOVOL:500V , CAPPRM:MHLW + MOVOL:200V) + COOL:AIR) + FREQ:50HZ , (CAPPRM:ASME , CAPPRM:MHLW) + FREQ:60HZ + MOVOL:460V) + CAPPRE:IEC , ((MOVOL:230V , MOVOL:575V) + COOL:AIR , MOVOL:460V) + CAPPRE:ULCUL + CAPPRM:ASME + FREQ:60HZ) **(25/02/2019 - 04/02/2020)** ((((CAPPRM:AS1210 , CAPPRM:CE , CAPPRM:MHLW , CAPPRM:MOM) + MOVOL:400V , CAPPRM:CE + MOVOL:500V , CAPPRM:MHLW + MOVOL:200V) + FREQ:50HZ , (CAPPRM:ASME , CAPPRM:MHLW) + FREQ:60HZ + MOVOL:460V) + CAPPRE:IEC , (MOVOL:230V , MOVOL:460V , MOVOL:575V) + CAPPRE:ULCUL + CAPPRM:ASME + FREQ:60HZ) + COOL:AIR **(05/02/2020 - 30/12/2027)** (CAPPRE:IEC + CAPPRM:MHLW + FREQ:50HZ + MOVOL:200V , CAPPRE:ULCUL + CAPPRM:ASME + FREQ:60HZ + MOVOL:230V) + COOL:AIR	Label
	1900 5350 18	1	INVERTER	**(12/12/2018 - 24/02/2019)** ((((CAPPRM:AS1210 , CAPPRM:CE , CAPPRM:MHLW , CAPPRM:MOM) + MOVOL:400V , (CAPPRM:CE + MOVOL:500V , CAPPRM:MHLW + MOVOL:200V) + COOL:AIR) + FREQ:50HZ , (CAPPRM:ASME , CAPPRM:MHLW) + FREQ:60HZ + MOVOL:460V) + CAPPRE:IEC , ((MOVOL:230V , MOVOL:575V) + COOL:AIR , MOVOL:460V) + CAPPRE:ULCUL + CAPPRM:ASME + FREQ:60HZ) **(25/02/2019 - 04/02/2020)** ((((CAPPRM:AS1210 , CAPPRM:CE , CAPPRM:MHLW , CAPPRM:MOM) + MOVOL:400V , CAPPRM:CE + MOVOL:500V , CAPPRM:MHLW + MOVOL:200V) + FREQ:50HZ , (CAPPRM:ASME , CAPPRM:MHLW) + FREQ:60HZ + MOVOL:460V) + CAPPRE:IEC , (MOVOL:230V , MOVOL:460V , MOVOL:575V) + CAPPRE:ULCUL + CAPPRM:ASME + FREQ:60HZ) + COOL:AIR **(05/02/2020 - 30/12/2027)** (CAPPRE:IEC + CAPPRM:MHLW + FREQ:50HZ + MOVOL:200V , CAPPRE:ULCUL + CAPPRM:ASME + FREQ:60HZ + MOVOL:230V) + COOL:AIR	U1

Legend:

CAPPRE:IEC - Component approval electrical:IEC
CAPPRE:ULCUL - Component approval electrical:UL/cUL
CAPPRM:AS1210 - Component approval mechanical:AS1210
CAPPRM:ASME - Component approval mechanical:ASME
CAPPRM:CE - Component approval mechanical:CE
CAPPRM:MHLW - Component approval mechanical:MHLW
CAPPRM:MOM - Component approval mechanical:MOM
COOL:AIR - Cooling:Air cooled
FREQ:50HZ - Frequency:50 Hz
FREQ:60HZ - Frequency:60 Hz
IDRY:Y - Integrated dryer:Yes
MODEL:GA110VP_16 - Model:GA 110VSD+
MOVOL:200V - Supply voltage:200 V
MOVOL:230V - Supply voltage:230 V
MOVOL:400V - Supply voltage:400 V
MOVOL:460V - Supply voltage:460 V
MOVOL:500V - Supply voltage:500 V
MOVOL:575V - Supply voltage:575 V

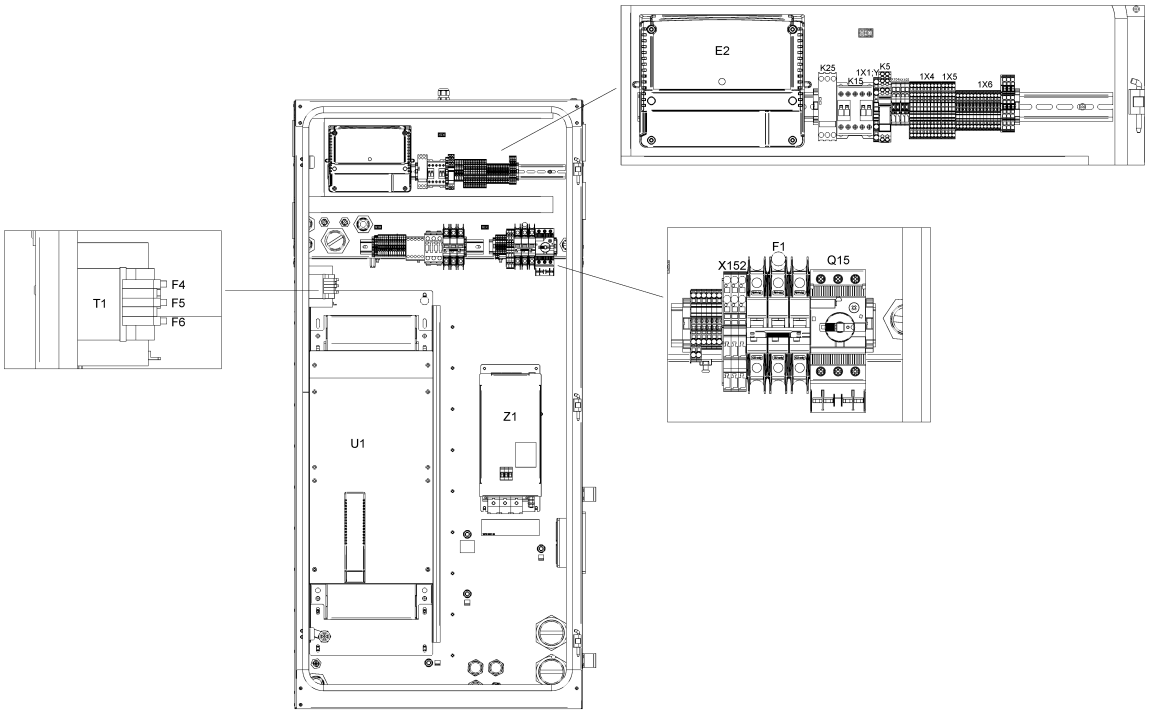
E2
K25
K15
1X1
K5
1X4
1X5
1X6
T1
F4
F5
F6
X152
F1
Q15
U1
Z1

Ref	Part Number	Qty	Name	Validity	EL
	1631 2079 00	1	NANOPERMRING	**(12/12/2018 - 24/02/2019)** ((((CAPPRM:AS1210 , CAPPRM:CE , CAPPRM:MHLW , CAPPRM:MOM) + MOVOL:400V , (CAPPRM:CE + MOVOL:500V , CAPPRM:MHLW + MOVOL:200V) + COOL:AIR) + FREQ:50HZ , (CAPPRM:ASME , CAPPRM:MHLW) + FREQ:60HZ + MOVOL:460V) + CAPPRE:IEC , ((MOVOL:230V , MOVOL:575V) + COOL:AIR , MOVOL:460V) + CAPPRE:ULCUL + CAPPRM:ASME + FREQ:60HZ) **(25/02/2019 - 04/02/2020)** ((((CAPPRM:AS1210 , CAPPRM:CE , CAPPRM:MHLW , CAPPRM:MOM) + MOVOL:400V , CAPPRM:CE + MOVOL:500V , CAPPRM:MHLW + MOVOL:200V) + FREQ:50HZ , (CAPPRM:ASME , CAPPRM:MHLW) + FREQ:60HZ + MOVOL:460V) + CAPPRE:IEC , (MOVOL:230V , MOVOL:460V , MOVOL:575V) + CAPPRE:ULCUL + CAPPRM:ASME + FREQ:60HZ) + COOL:AIR **(05/02/2020 - 30/12/2027)** (CAPPRE:IEC + CAPPRM:MHLW + FREQ:50HZ + MOVOL:200V , CAPPRE:ULCUL + CAPPRM:ASME + FREQ:60HZ + MOVOL:230V) + COOL:AIR	
	Electrical legend:	Nanoperm ring			
	0697 9811 17	2	PLUG	**(12/12/2018 - 24/02/2019)** ((((CAPPRM:AS1210 , CAPPRM:CE , CAPPRM:MHLW , CAPPRM:MOM) + MOVOL:400V , (CAPPRM:CE + MOVOL:500V , CAPPRM:MHLW + MOVOL:200V) + COOL:AIR) + FREQ:50HZ , (CAPPRM:ASME , CAPPRM:MHLW) + FREQ:60HZ + MOVOL:460V) + CAPPRE:IEC , ((MOVOL:230V , MOVOL:575V) + COOL:AIR , MOVOL:460V) + CAPPRE:ULCUL + CAPPRM:ASME + FREQ:60HZ) **(25/02/2019 - 04/02/2020)** ((((CAPPRM:AS1210 , CAPPRM:CE , CAPPRM:MHLW , CAPPRM:MOM) + MOVOL:400V , CAPPRM:CE + MOVOL:500V , CAPPRM:MHLW + MOVOL:200V) + FREQ:50HZ , (CAPPRM:ASME , CAPPRM:MHLW) + FREQ:60HZ + MOVOL:460V) + CAPPRE:IEC , (MOVOL:230V , MOVOL:460V , MOVOL:575V) + CAPPRE:ULCUL + CAPPRM:ASME + FREQ:60HZ) + COOL:AIR **(05/02/2020 - 30/12/2027)** (CAPPRE:IEC + CAPPRM:MHLW + FREQ:50HZ + MOVOL:200V , CAPPRE:ULCUL + CAPPRM:ASME + FREQ:60HZ + MOVOL:230V) + COOL:AIR	
	Electrical legend:	Plug for transfo supply			
	0989 3700 48	2	NUT	**(12/12/2018 - 24/02/2019)** ((((CAPPRM:AS1210 , CAPPRM:CE , CAPPRM:MHLW , CAPPRM:MOM) + MOVOL:400V , (CAPPRM:CE + MOVOL:500V , CAPPRM:MHLW + MOVOL:200V) + COOL:AIR) + FREQ:50HZ , (CAPPRM:ASME , CAPPRM:MHLW) + FREQ:60HZ + MOVOL:460V) + CAPPRE:IEC , ((MOVOL:230V , MOVOL:575V) + COOL:AIR , MOVOL:460V) + CAPPRE:ULCUL + CAPPRM:ASME + FREQ:60HZ) **(25/02/2019 - 04/02/2020)** ((((CAPPRM:AS1210 , CAPPRM:CE , CAPPRM:MHLW , CAPPRM:MOM) + MOVOL:400V , CAPPRM:CE + MOVOL:500V , CAPPRM:MHLW + MOVOL:200V) + FREQ:50HZ , (CAPPRM:ASME , CAPPRM:MHLW) + FREQ:60HZ + MOVOL:460V) + CAPPRE:IEC , (MOVOL:230V , MOVOL:460V , MOVOL:575V) + CAPPRE:ULCUL + CAPPRM:ASME + FREQ:60HZ) + COOL:AIR **(05/02/2020 - 30/12/2027)** (CAPPRE:IEC + CAPPRM:MHLW + FREQ:50HZ + MOVOL:200V , CAPPRE:ULCUL + CAPPRM:ASME + FREQ:60HZ + MOVOL:230V) + COOL:AIR	
	Electrical legend:	Nut for transfo supply			

Legend:

CAPPRE:IEC - Component approval electrical:IEC
CAPPRE:ULCUL - Component approval electrical:UL/cUL
CAPPRM:AS1210 - Component approval mechanical:AS1210
CAPPRM:ASME - Component approval mechanical:ASME
CAPPRM:CE - Component approval mechanical:CE
CAPPRM:MHLW - Component approval mechanical:MHLW
CAPPRM:MOM - Component approval mechanical:MOM
COOL:AIR - Cooling:Air cooled
FREQ:50HZ - Frequency:50 Hz
FREQ:60HZ - Frequency:60 Hz
IDRY:Y - Integrated dryer:Yes
MODEL:GA110VP_16 - Model:GA 110VSD+
MOVOL:200V - Supply voltage:200 V
MOVOL:230V - Supply voltage:230 V
MOVOL:400V - Supply voltage:400 V
MOVOL:460V - Supply voltage:460 V
MOVOL:500V - Supply voltage:500 V
MOVOL:575V - Supply voltage:575 V

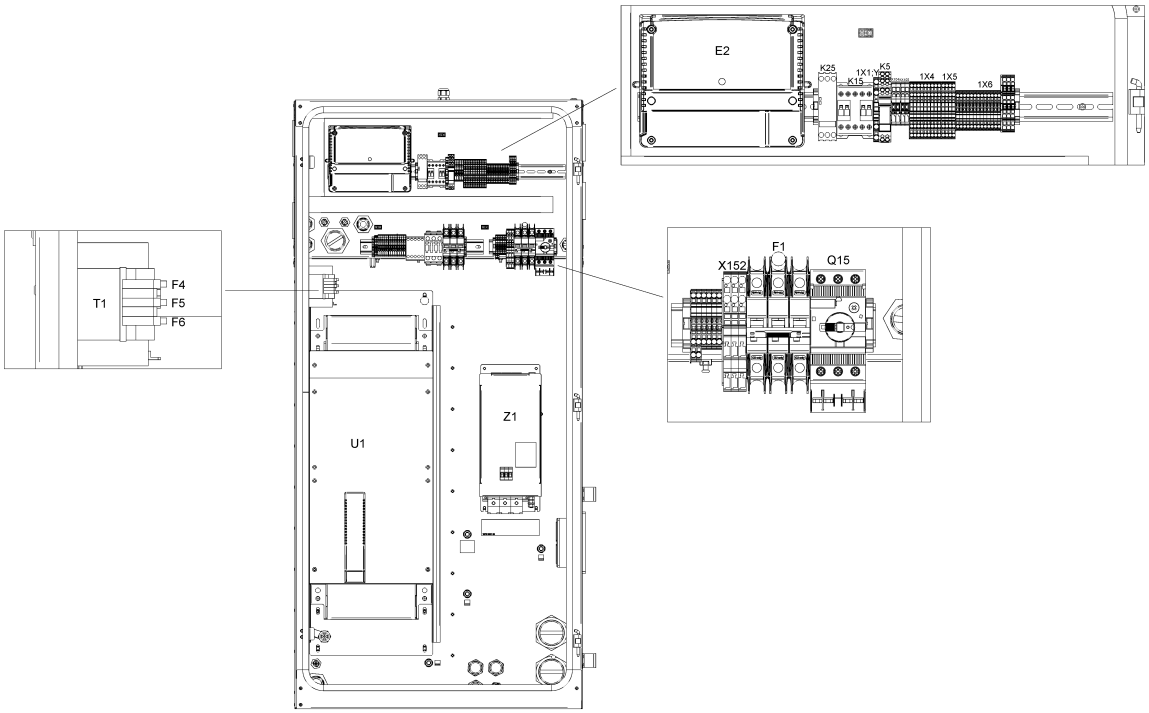
E2
K25
K15
1X1
K5
1X4
1X5
1X6
T1
F4
F5
F6
X152
F1
Q15
U1
Z1

21.27 - Cubicle components GA 110 VSD+ - (200V-400V-500V/50Hz, 460V/60Hz - IEC, 230V-460V-575V/60Hz - UL-cUL) - Full-Feature (12/12/2018 - 04/02/2020)

(((MOVOL:200V , MOVOL:400V , MOVOL:500V) + FREQ:50HZ , FREQ:60HZ + MOVOL:460V) + CAPPRE:IEC , (MOVOL:230V , MOVOL:460V , MOVOL:575V) + CAPPRE:ULCUL + FREQ:60HZ) + IDRY:Y + MODEL:GA110VP_16

Ref	Part Number	Qty	Name	Validity	EL
	0698 5140 72	1	CABLE GLAND	**(12/12/2018 - 24/02/2019)** ((((CAPPRM:AS1210 , CAPPRM:CE , CAPPRM:MHLW , CAPPRM:MOM) + MOVOL:400V , (CAPPRM:CE + MOVOL:500V , CAPPRM:MHLW + MOVOL:200V) + COOL:AIR) + FREQ:50HZ , (CAPPRM:ASME , CAPPRM:MHLW) + FREQ:60HZ + MOVOL:460V) + CAPPRE:IEC , ((MOVOL:230V , MOVOL:575V) + COOL:AIR , MOVOL:460V) + CAPPRE:ULCUL + CAPPRM:ASME + FREQ:60HZ) **(25/02/2019 - 04/02/2020)** ((((CAPPRM:AS1210 , CAPPRM:CE , CAPPRM:MHLW , CAPPRM:MOM) + MOVOL:400V , CAPPRM:CE + MOVOL:500V , CAPPRM:MHLW + MOVOL:200V) + FREQ:50HZ , (CAPPRM:ASME , CAPPRM:MHLW) + FREQ:60HZ + MOVOL:460V) + CAPPRE:IEC , (MOVOL:230V , MOVOL:460V , MOVOL:575V) + CAPPRE:ULCUL + CAPPRM:ASME + FREQ:60HZ) + COOL:AIR **(05/02/2020 - 30/12/2027)** (CAPPRE:IEC + CAPPRM:MHLW + FREQ:50HZ + MOVOL:200V , CAPPRE:ULCUL + CAPPRM:ASME + FREQ:60HZ + MOVOL:230V) + COOL:AIR	Fan
	0698 5140 71	1	CABLE GLAND	**(12/12/2018 - 24/02/2019)** ((((CAPPRM:AS1210 , CAPPRM:CE , CAPPRM:MHLW , CAPPRM:MOM) + MOVOL:400V , (CAPPRM:CE + MOVOL:500V , CAPPRM:MHLW + MOVOL:200V) + COOL:AIR) + FREQ:50HZ , (CAPPRM:ASME , CAPPRM:MHLW) + FREQ:60HZ + MOVOL:460V) + CAPPRE:IEC , ((MOVOL:230V , MOVOL:575V) + COOL:AIR , MOVOL:460V) + CAPPRE:ULCUL + CAPPRM:ASME + FREQ:60HZ) **(25/02/2019 - 04/02/2020)** ((((CAPPRM:AS1210 , CAPPRM:CE , CAPPRM:MHLW , CAPPRM:MOM) + MOVOL:400V , CAPPRM:CE + MOVOL:500V , CAPPRM:MHLW + MOVOL:200V) + FREQ:50HZ , (CAPPRM:ASME , CAPPRM:MHLW) + FREQ:60HZ + MOVOL:460V) + CAPPRE:IEC , (MOVOL:230V , MOVOL:460V , MOVOL:575V) + CAPPRE:ULCUL + CAPPRM:ASME + FREQ:60HZ) + COOL:AIR **(05/02/2020 - 30/12/2027)** (CAPPRE:IEC + CAPPRM:MHLW + FREQ:50HZ + MOVOL:200V , CAPPRE:ULCUL + CAPPRM:ASME + FREQ:60HZ + MOVOL:230V) + COOL:AIR	
	Electrical legend:	Ambient sensor			
	0697 9809 20	1	LOCKNUT	**(12/12/2018 - 24/02/2019)** ((((CAPPRM:AS1210 , CAPPRM:CE , CAPPRM:MHLW , CAPPRM:MOM) + MOVOL:400V , (CAPPRM:CE + MOVOL:500V , CAPPRM:MHLW + MOVOL:200V) + COOL:AIR) + FREQ:50HZ , (CAPPRM:ASME , CAPPRM:MHLW) + FREQ:60HZ + MOVOL:460V) + CAPPRE:IEC , ((MOVOL:230V , MOVOL:575V) + COOL:AIR , MOVOL:460V) + CAPPRE:ULCUL + CAPPRM:ASME + FREQ:60HZ) **(25/02/2019 - 04/02/2020)** ((((CAPPRM:AS1210 , CAPPRM:CE , CAPPRM:MHLW , CAPPRM:MOM) + MOVOL:400V , CAPPRM:CE + MOVOL:500V , CAPPRM:MHLW + MOVOL:200V) + FREQ:50HZ , (CAPPRM:ASME , CAPPRM:MHLW) + FREQ:60HZ + MOVOL:460V) + CAPPRE:IEC , (MOVOL:230V , MOVOL:460V , MOVOL:575V) + CAPPRE:ULCUL + CAPPRM:ASME + FREQ:60HZ) + COOL:AIR **(05/02/2020 - 30/12/2027)** (CAPPRE:IEC + CAPPRM:MHLW + FREQ:50HZ + MOVOL:200V , CAPPRE:ULCUL + CAPPRM:ASME + FREQ:60HZ + MOVOL:230V) + COOL:AIR	
	Electrical legend:	Ambient sensor			

Legend:

CAPPRE:IEC - Component approval electrical:IEC
CAPPRE:ULCUL - Component approval electrical:UL/cUL
CAPPRM:AS1210 - Component approval mechanical:AS1210
CAPPRM:ASME - Component approval mechanical:ASME
CAPPRM:CE - Component approval mechanical:CE
CAPPRM:MHLW - Component approval mechanical:MHLW
CAPPRM:MOM - Component approval mechanical:MOM
COOL:AIR - Cooling:Air cooled
FREQ:50HZ - Frequency:50 Hz
FREQ:60HZ - Frequency:60 Hz
IDRY:Y - Integrated dryer:Yes
MODEL:GA110VP_16 - Model:GA 110VSD+
MOVOL:200V - Supply voltage:200 V
MOVOL:230V - Supply voltage:230 V
MOVOL:400V - Supply voltage:400 V
MOVOL:460V - Supply voltage:460 V
MOVOL:500V - Supply voltage:500 V
MOVOL:575V - Supply voltage:575 V

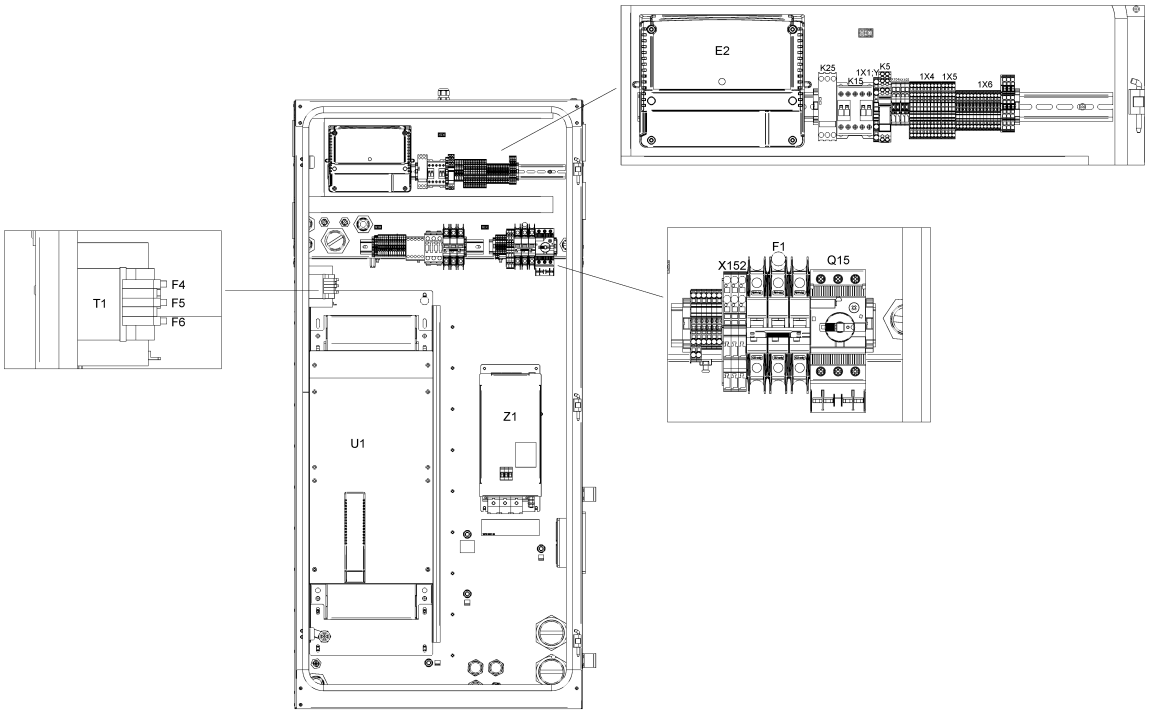
E2
K25
K15
1X1
K5
1X4
1X5
1X6
T1
F4
F5
F6
X152
F1
Q15
U1
Z1

21.27 - Cubicle components GA 110 VSD+ - (200V-400V-500V/50Hz, 460V/60Hz - IEC, 230V-460V-575V/60Hz - UL-cUL) - Full-Feature (12/12/2018 - 04/02/2020)

(((MOVOL:200V , MOVOL:400V , MOVOL:500V) + FREQ:50HZ , FREQ:60HZ + MOVOL:460V) + CAPPRE:IEC , (MOVOL:230V , MOVOL:460V , MOVOL:575V) + CAPPRE:ULCUL + FREQ:60HZ) + IDRY:Y + MODEL:GA110VP_16

Ref	Part Number	Qty	Name	Validity	EL
	1089 9556 44	1	FAN WITH FILTER	**(12/12/2018 - 24/02/2019)** ((((CAPPRM:AS1210 , CAPPRM:CE , CAPPRM:MHLW , CAPPRM:MOM) + MOVOL:400V , (CAPPRM:CE + MOVOL:500V , CAPPRM:MHLW + MOVOL:200V) + COOL:AIR) + FREQ:50HZ , (CAPPRM:ASME , CAPPRM:MHLW) + FREQ:60HZ + MOVOL:460V) + CAPPRE:IEC , ((MOVOL:230V , MOVOL:575V) + COOL:AIR , MOVOL:460V) + CAPPRE:ULCUL + CAPPRM:ASME + FREQ:60HZ) **(25/02/2019 - 04/02/2020)** ((((CAPPRM:AS1210 , CAPPRM:CE , CAPPRM:MHLW , CAPPRM:MOM) + MOVOL:400V , CAPPRM:CE + MOVOL:500V , CAPPRM:MHLW + MOVOL:200V) + FREQ:50HZ , (CAPPRM:ASME , CAPPRM:MHLW) + FREQ:60HZ + MOVOL:460V) + CAPPRE:IEC , (MOVOL:230V , MOVOL:460V , MOVOL:575V) + CAPPRE:ULCUL + CAPPRM:ASME + FREQ:60HZ) + COOL:AIR **(05/02/2020 - 30/12/2027)** (CAPPRE:IEC + CAPPRM:MHLW + FREQ:50HZ + MOVOL:200V , CAPPRE:ULCUL + CAPPRM:ASME + FREQ:60HZ + MOVOL:230V) + COOL:AIR	Cubicle fan
	1089 9556 72	4	AIR INLET WITHOUT FILTER	**(12/12/2018 - 24/02/2019)** ((((CAPPRM:AS1210 , CAPPRM:CE , CAPPRM:MHLW , CAPPRM:MOM) + MOVOL:400V , (CAPPRM:CE + MOVOL:500V , CAPPRM:MHLW + MOVOL:200V) + COOL:AIR) + FREQ:50HZ , (CAPPRM:ASME , CAPPRM:MHLW) + FREQ:60HZ + MOVOL:460V) + CAPPRE:IEC , ((MOVOL:230V , MOVOL:575V) + COOL:AIR , MOVOL:460V) + CAPPRE:ULCUL + CAPPRM:ASME + FREQ:60HZ) **(25/02/2019 - 04/02/2020)** ((((CAPPRM:AS1210 , CAPPRM:CE , CAPPRM:MHLW , CAPPRM:MOM) + MOVOL:400V , CAPPRM:CE + MOVOL:500V , CAPPRM:MHLW + MOVOL:200V) + FREQ:50HZ , (CAPPRM:ASME , CAPPRM:MHLW) + FREQ:60HZ + MOVOL:460V) + CAPPRE:IEC , (MOVOL:230V , MOVOL:460V , MOVOL:575V) + CAPPRE:ULCUL + CAPPRM:ASME + FREQ:60HZ) + COOL:AIR **(05/02/2020 - 30/12/2027)** (CAPPRE:IEC + CAPPRM:MHLW + FREQ:50HZ + MOVOL:200V , CAPPRE:ULCUL + CAPPRM:ASME + FREQ:60HZ + MOVOL:230V) + COOL:AIR	Filter grid
	1088 0032 09	1	CONNECTOR	**(12/12/2018 - 24/02/2019)** ((((CAPPRM:AS1210 , CAPPRM:CE , CAPPRM:MHLW , CAPPRM:MOM) + MOVOL:400V , (CAPPRM:CE + MOVOL:500V , CAPPRM:MHLW + MOVOL:200V) + COOL:AIR) + FREQ:50HZ , (CAPPRM:ASME , CAPPRM:MHLW) + FREQ:60HZ + MOVOL:460V) + CAPPRE:IEC , ((MOVOL:230V , MOVOL:575V) + COOL:AIR , MOVOL:460V) + CAPPRE:ULCUL + CAPPRM:ASME + FREQ:60HZ) **(25/02/2019 - 04/02/2020)** ((((CAPPRM:AS1210 , CAPPRM:CE , CAPPRM:MHLW , CAPPRM:MOM) + MOVOL:400V , CAPPRM:CE + MOVOL:500V , CAPPRM:MHLW + MOVOL:200V) + FREQ:50HZ , (CAPPRM:ASME , CAPPRM:MHLW) + FREQ:60HZ + MOVOL:460V) + CAPPRE:IEC , (MOVOL:230V , MOVOL:460V , MOVOL:575V) + CAPPRE:ULCUL + CAPPRM:ASME + FREQ:60HZ) + COOL:AIR **(05/02/2020 - 30/12/2027)** (CAPPRE:IEC + CAPPRM:MHLW + FREQ:50HZ + MOVOL:200V , CAPPRE:ULCUL + CAPPRM:ASME + FREQ:60HZ + MOVOL:230V) + COOL:AIR	X3

Legend:

CAPPRE:IEC - Component approval electrical:IEC
CAPPRE:ULCUL - Component approval electrical:UL/cUL
CAPPRM:AS1210 - Component approval mechanical:AS1210
CAPPRM:ASME - Component approval mechanical:ASME
CAPPRM:CE - Component approval mechanical:CE
CAPPRM:MHLW - Component approval mechanical:MHLW
CAPPRM:MOM - Component approval mechanical:MOM
COOL:AIR - Cooling:Air cooled
FREQ:50HZ - Frequency:50 Hz
FREQ:60HZ - Frequency:60 Hz
IDRY:Y - Integrated dryer:Yes
MODEL:GA110VP_16 - Model:GA 110VSD+
MOVOL:200V - Supply voltage:200 V
MOVOL:230V - Supply voltage:230 V
MOVOL:400V - Supply voltage:400 V
MOVOL:460V - Supply voltage:460 V
MOVOL:500V - Supply voltage:500 V
MOVOL:575V - Supply voltage:575 V

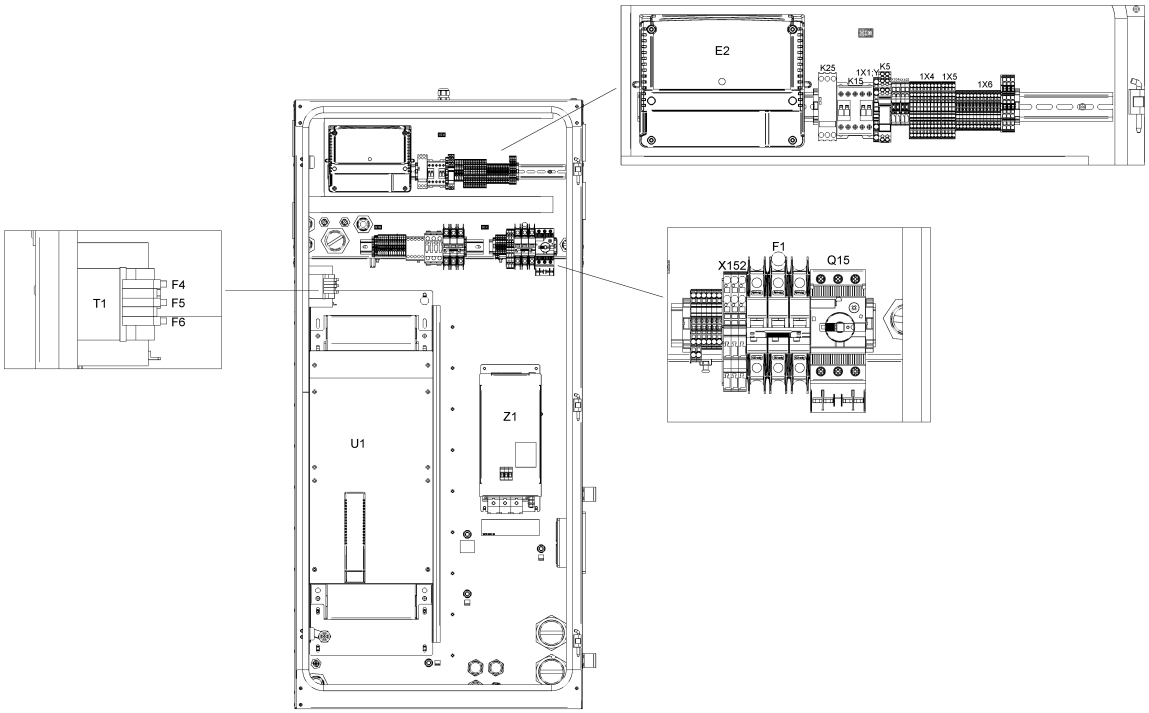
E2
K25
K15
1X1
K5
1X4
1X5
1X6
T1
F4
F5
F6
X152
F1
Q15
U1
Z1

21.27 - Cubicle components GA 110 VSD+ - (200V-400V-500V/50Hz, 460V/60Hz - IEC, 230V-460V-575V/60Hz - UL-cUL) - Full-Feature (12/12/2018 - 04/02/2020)

(((MOVOL:200V , MOVOL:400V , MOVOL:500V) + FREQ:50HZ , FREQ:60HZ + MOVOL:460V) + CAPPRE:IEC , (MOVOL:230V , MOVOL:460V , MOVOL:575V) + CAPPRE:ULCUL + FREQ:60HZ) + IDRY:Y + MODEL:GA110VP_16

Ref	Part Number	Qty	Name	Validity	EL
	1089 9572 04	1	LINE FILTER	**(12/12/2018 - 24/02/2019)** ((((CAPPRM:AS1210 , CAPPRM:CE , CAPPRM:MHLW , CAPPRM:MOM) + MOVOL:400V , (CAPPRM:CE + MOVOL:500V , CAPPRM:MHLW + MOVOL:200V) + COOL:AIR) + FREQ:50HZ , (CAPPRM:ASME , CAPPRM:MHLW) + FREQ:60HZ + MOVOL:460V) + CAPPRE:IEC , ((MOVOL:230V , MOVOL:575V) + COOL:AIR , MOVOL:460V) + CAPPRE:ULCUL + CAPPRM:ASME + FREQ:60HZ) **(25/02/2019 - 04/02/2020)** ((((CAPPRM:AS1210 , CAPPRM:CE , CAPPRM:MHLW , CAPPRM:MOM) + MOVOL:400V , CAPPRM:CE + MOVOL:500V , CAPPRM:MHLW + MOVOL:200V) + FREQ:50HZ , (CAPPRM:ASME , CAPPRM:MHLW) + FREQ:60HZ + MOVOL:460V) + CAPPRE:IEC , (MOVOL:230V , MOVOL:460V , MOVOL:575V) + CAPPRE:ULCUL + CAPPRM:ASME + FREQ:60HZ) + COOL:AIR **(05/02/2020 - 30/12/2027)** (CAPPRE:IEC + CAPPRM:MHLW + FREQ:50HZ + MOVOL:200V , CAPPRE:ULCUL + CAPPRM:ASME + FREQ:60HZ + MOVOL:230V) + COOL:AIR	Z1 for 110kw
	Electrical legend:	Z1 for 110kw			
	1089 9562 04	1	STRAP	**(12/12/2018 - 24/02/2019)** ((((CAPPRM:AS1210 , CAPPRM:CE , CAPPRM:MHLW , CAPPRM:MOM) + MOVOL:400V , (CAPPRM:CE + MOVOL:500V , CAPPRM:MHLW + MOVOL:200V) + COOL:AIR) + FREQ:50HZ , (CAPPRM:ASME , CAPPRM:MHLW) + FREQ:60HZ + MOVOL:460V) + CAPPRE:IEC , ((MOVOL:230V , MOVOL:575V) + COOL:AIR , MOVOL:460V) + CAPPRE:ULCUL + CAPPRM:ASME + FREQ:60HZ) **(25/02/2019 - 04/02/2020)** ((((CAPPRM:AS1210 , CAPPRM:CE , CAPPRM:MHLW , CAPPRM:MOM) + MOVOL:400V , CAPPRM:CE + MOVOL:500V , CAPPRM:MHLW + MOVOL:200V) + FREQ:50HZ , (CAPPRM:ASME , CAPPRM:MHLW) + FREQ:60HZ + MOVOL:460V) + CAPPRE:IEC , (MOVOL:230V , MOVOL:460V , MOVOL:575V) + CAPPRE:ULCUL + CAPPRM:ASME + FREQ:60HZ) + COOL:AIR **(05/02/2020 - 30/12/2027)** (CAPPRE:IEC + CAPPRM:MHLW + FREQ:50HZ + MOVOL:200V , CAPPRE:ULCUL + CAPPRM:ASME + FREQ:60HZ + MOVOL:230V) + COOL:AIR	HF-screen
	1089 9514 56	1	TRANSFORMER	**(12/12/2018 - 24/02/2019)** ((((CAPPRM:AS1210 , CAPPRM:CE , CAPPRM:MHLW , CAPPRM:MOM) + MOVOL:400V , (CAPPRM:CE + MOVOL:500V , CAPPRM:MHLW + MOVOL:200V) + COOL:AIR) + FREQ:50HZ , (CAPPRM:ASME , CAPPRM:MHLW) + FREQ:60HZ + MOVOL:460V) + CAPPRE:IEC , ((MOVOL:230V , MOVOL:575V) + COOL:AIR , MOVOL:460V) + CAPPRE:ULCUL + CAPPRM:ASME + FREQ:60HZ) **(25/02/2019 - 04/02/2020)** ((((CAPPRM:AS1210 , CAPPRM:CE , CAPPRM:MHLW , CAPPRM:MOM) + MOVOL:400V , CAPPRM:CE + MOVOL:500V , CAPPRM:MHLW + MOVOL:200V) + FREQ:50HZ , (CAPPRM:ASME , CAPPRM:MHLW) + FREQ:60HZ + MOVOL:460V) + CAPPRE:IEC , (MOVOL:230V , MOVOL:460V , MOVOL:575V) + CAPPRE:ULCUL + CAPPRM:ASME + FREQ:60HZ) + COOL:AIR **(05/02/2020 - 30/12/2027)** (CAPPRE:IEC + CAPPRM:MHLW + FREQ:50HZ + MOVOL:200V , CAPPRE:ULCUL + CAPPRM:ASME + FREQ:60HZ + MOVOL:230V) + COOL:AIR	T1

Legend:

CAPPRE:IEC - Component approval electrical:IEC
CAPPRE:ULCUL - Component approval electrical:UL/cUL
CAPPRM:AS1210 - Component approval mechanical:AS1210
CAPPRM:ASME - Component approval mechanical:ASME
CAPPRM:CE - Component approval mechanical:CE
CAPPRM:MHLW - Component approval mechanical:MHLW
CAPPRM:MOM - Component approval mechanical:MOM
COOL:AIR - Cooling:Air cooled
FREQ:50HZ - Frequency:50 Hz
FREQ:60HZ - Frequency:60 Hz
IDRY:Y - Integrated dryer:Yes
MODEL:GA110VP_16 - Model:GA 110VSD+
MOVOL:200V - Supply voltage:200 V
MOVOL:230V - Supply voltage:230 V
MOVOL:400V - Supply voltage:400 V
MOVOL:460V - Supply voltage:460 V
MOVOL:500V - Supply voltage:500 V
MOVOL:575V - Supply voltage:575 V

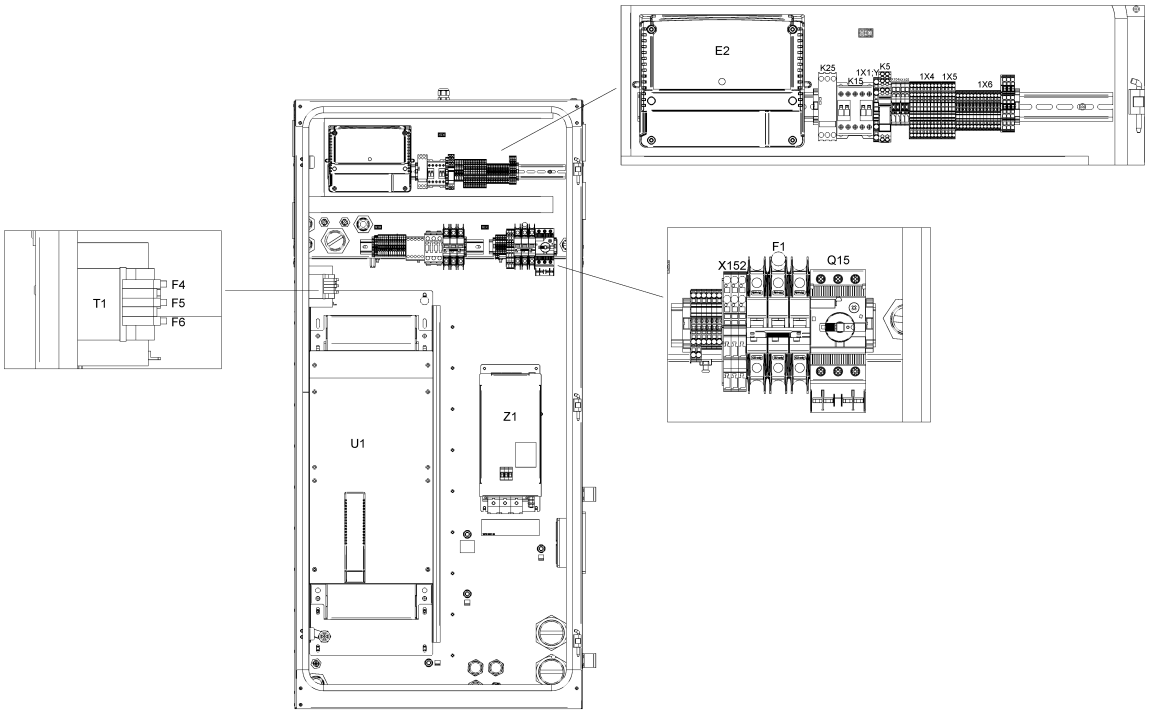
E2
K25
K15
1X1
K5
1X4
1X5
1X6
T1
F4
F5
F6
X152
F1
Q15
U1
Z1

21.27 - Cubicle components GA 110 VSD+ - (200V-400V-500V/50Hz, 460V/60Hz - IEC, 230V-460V-575V/60Hz - UL-cUL) - Full-Feature (12/12/2018 - 04/02/2020)

(((MOVOL:200V , MOVOL:400V , MOVOL:500V) + FREQ:50HZ , FREQ:60HZ + MOVOL:460V) + CAPPRE:IEC , (MOVOL:230V , MOVOL:460V , MOVOL:575V) + CAPPRE:ULCUL + FREQ:60HZ) + IDRY:Y + MODEL:GA110VP_16

Ref	Part Number	Qty	Name	Validity	EL
	1089 9522 26	1	CIRCUIT BREAKER	**(12/12/2018 - 24/02/2019)** ((((CAPPRM:AS1210 , CAPPRM:CE , CAPPRM:MHLW , CAPPRM:MOM) + MOVOL:400V , (CAPPRM:CE + MOVOL:500V , CAPPRM:MHLW + MOVOL:200V) + COOL:AIR) + FREQ:50HZ , (CAPPRM:ASME , CAPPRM:MHLW) + FREQ:60HZ + MOVOL:460V) + CAPPRE:IEC , ((MOVOL:230V , MOVOL:575V) + COOL:AIR , MOVOL:460V) + CAPPRE:ULCUL + CAPPRM:ASME + FREQ:60HZ) **(25/02/2019 - 04/02/2020)** ((((CAPPRM:AS1210 , CAPPRM:CE , CAPPRM:MHLW , CAPPRM:MOM) + MOVOL:400V , CAPPRM:CE + MOVOL:500V , CAPPRM:MHLW + MOVOL:200V) + FREQ:50HZ , (CAPPRM:ASME , CAPPRM:MHLW) + FREQ:60HZ + MOVOL:460V) + CAPPRE:IEC , (MOVOL:230V , MOVOL:460V , MOVOL:575V) + CAPPRE:ULCUL + CAPPRM:ASME + FREQ:60HZ) + COOL:AIR **(05/02/2020 - 30/12/2027)** (CAPPRE:IEC + CAPPRM:MHLW + FREQ:50HZ + MOVOL:200V , CAPPRE:ULCUL + CAPPRM:ASME + FREQ:60HZ + MOVOL:230V) + COOL:AIR	F1
	1089 9513 41	1	PUSH BUTTON	**(12/12/2018 - 24/02/2019)** ((((CAPPRM:AS1210 , CAPPRM:CE , CAPPRM:MHLW , CAPPRM:MOM) + MOVOL:400V , (CAPPRM:CE + MOVOL:500V , CAPPRM:MHLW + MOVOL:200V) + COOL:AIR) + FREQ:50HZ , (CAPPRM:ASME , CAPPRM:MHLW) + FREQ:60HZ + MOVOL:460V) + CAPPRE:IEC , ((MOVOL:230V , MOVOL:575V) + COOL:AIR , MOVOL:460V) + CAPPRE:ULCUL + CAPPRM:ASME + FREQ:60HZ) **(25/02/2019 - 04/02/2020)** ((((CAPPRM:AS1210 , CAPPRM:CE , CAPPRM:MHLW , CAPPRM:MOM) + MOVOL:400V , CAPPRM:CE + MOVOL:500V , CAPPRM:MHLW + MOVOL:200V) + FREQ:50HZ , (CAPPRM:ASME , CAPPRM:MHLW) + FREQ:60HZ + MOVOL:460V) + CAPPRE:IEC , (MOVOL:230V , MOVOL:460V , MOVOL:575V) + CAPPRE:ULCUL + CAPPRM:ASME + FREQ:60HZ) + COOL:AIR **(05/02/2020 - 30/12/2027)** (CAPPRE:IEC + CAPPRM:MHLW + FREQ:50HZ + MOVOL:200V , CAPPRE:ULCUL + CAPPRM:ASME + FREQ:60HZ + MOVOL:230V) + COOL:AIR	S3
	1089 9513 28	1	HOLDER	**(12/12/2018 - 24/02/2019)** ((((CAPPRM:AS1210 , CAPPRM:CE , CAPPRM:MHLW , CAPPRM:MOM) + MOVOL:400V , (CAPPRM:CE + MOVOL:500V , CAPPRM:MHLW + MOVOL:200V) + COOL:AIR) + FREQ:50HZ , (CAPPRM:ASME , CAPPRM:MHLW) + FREQ:60HZ + MOVOL:460V) + CAPPRE:IEC , ((MOVOL:230V , MOVOL:575V) + COOL:AIR , MOVOL:460V) + CAPPRE:ULCUL + CAPPRM:ASME + FREQ:60HZ) **(25/02/2019 - 04/02/2020)** ((((CAPPRM:AS1210 , CAPPRM:CE , CAPPRM:MHLW , CAPPRM:MOM) + MOVOL:400V , CAPPRM:CE + MOVOL:500V , CAPPRM:MHLW + MOVOL:200V) + FREQ:50HZ , (CAPPRM:ASME , CAPPRM:MHLW) + FREQ:60HZ + MOVOL:460V) + CAPPRE:IEC , (MOVOL:230V , MOVOL:460V , MOVOL:575V) + CAPPRE:ULCUL + CAPPRM:ASME + FREQ:60HZ) + COOL:AIR **(05/02/2020 - 30/12/2027)** (CAPPRE:IEC + CAPPRM:MHLW + FREQ:50HZ + MOVOL:200V , CAPPRE:ULCUL + CAPPRM:ASME + FREQ:60HZ + MOVOL:230V) + COOL:AIR	S3

Legend:

CAPPRE:IEC - Component approval electrical:IEC
CAPPRE:ULCUL - Component approval electrical:UL/cUL
CAPPRM:AS1210 - Component approval mechanical:AS1210
CAPPRM:ASME - Component approval mechanical:ASME
CAPPRM:CE - Component approval mechanical:CE
CAPPRM:MHLW - Component approval mechanical:MHLW
CAPPRM:MOM - Component approval mechanical:MOM
COOL:AIR - Cooling:Air cooled
FREQ:50HZ - Frequency:50 Hz
FREQ:60HZ - Frequency:60 Hz
IDRY:Y - Integrated dryer:Yes
MODEL:GA110VP_16 - Model:GA 110VSD+
MOVOL:200V - Supply voltage:200 V
MOVOL:230V - Supply voltage:230 V
MOVOL:400V - Supply voltage:400 V
MOVOL:460V - Supply voltage:460 V
MOVOL:500V - Supply voltage:500 V
MOVOL:575V - Supply voltage:575 V

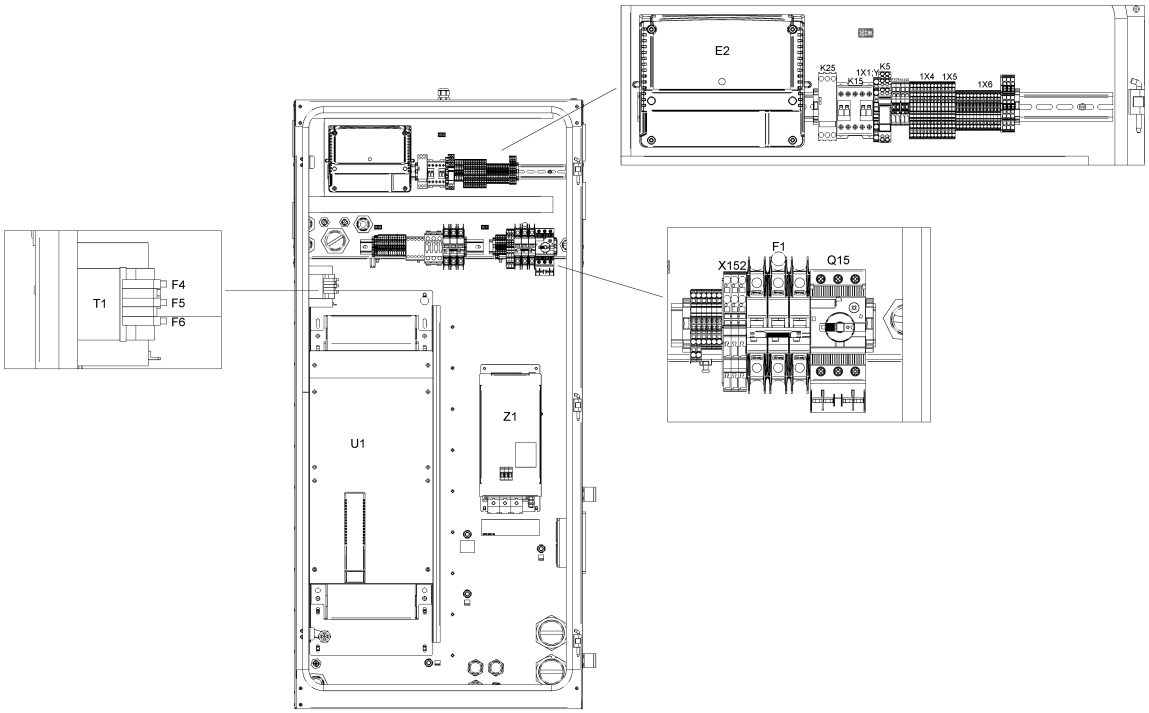
E2
K25
K15
1X1
K5
1X4
1X5
1X6
T1
F4
F5
F6
X152
F1
Q15
U1
Z1

21.27 - Cubicle components GA 110 VSD+ - (200V-400V-500V/50Hz, 460V/60Hz - IEC, 230V-460V-575V/60Hz - UL-cUL) - Full-Feature (12/12/2018 - 04/02/2020)

(((MOVOL:200V , MOVOL:400V , MOVOL:500V) + FREQ:50HZ , FREQ:60HZ + MOVOL:460V) + CAPPRE:IEC , (MOVOL:230V , MOVOL:460V , MOVOL:575V) + CAPPRE:ULCUL + FREQ:60HZ) + IDRY:Y + MODEL:GA110VP_16

Ref	Part Number	Qty	Name	Validity	EL
	~~1089 9513 30~~	4	CONTACTOR	**(12/12/2018 - 24/02/2019)** ((((CAPPRM:AS1210 , CAPPRM:CE , CAPPRM:MHLW , CAPPRM:MOM) + MOVOL:400V , (CAPPRM:CE + MOVOL:500V , CAPPRM:MHLW + MOVOL:200V) + COOL:AIR) + FREQ:50HZ , (CAPPRM:ASME , CAPPRM:MHLW) + FREQ:60HZ + MOVOL:460V) + CAPPRE:IEC , ((MOVOL:230V , MOVOL:575V) + COOL:AIR , MOVOL:460V) + CAPPRE:ULCUL + CAPPRM:ASME + FREQ:60HZ) **(25/02/2019 - 04/02/2020)** ((((CAPPRM:AS1210 , CAPPRM:CE , CAPPRM:MHLW , CAPPRM:MOM) + MOVOL:400V , CAPPRM:CE + MOVOL:500V , CAPPRM:MHLW + MOVOL:200V) + FREQ:50HZ , (CAPPRM:ASME , CAPPRM:MHLW) + FREQ:60HZ + MOVOL:460V) + CAPPRE:IEC , (MOVOL:230V , MOVOL:460V , MOVOL:575V) + CAPPRE:ULCUL + CAPPRM:ASME + FREQ:60HZ) + COOL:AIR **(05/02/2020 - 30/12/2027)** (CAPPRE:IEC + CAPPRM:MHLW + FREQ:50HZ + MOVOL:200V , CAPPRE:ULCUL + CAPPRM:ASME + FREQ:60HZ + MOVOL:230V) + COOL:AIR	S3
	Substituted by:	1089 9513 04 - CONTACT BLOCK (quantity: 1)			
	1088 0031 02	1	CONNECTOR 2-POLE	**(12/12/2018 - 17/02/2019)** ((((CAPPRM:AS1210 , CAPPRM:CE , CAPPRM:MHLW , CAPPRM:MOM) + MOVOL:400V , (CAPPRM:CE + MOVOL:500V , CAPPRM:MHLW + MOVOL:200V) + COOL:AIR) + FREQ:50HZ , (CAPPRM:ASME , CAPPRM:MHLW) + FREQ:60HZ + MOVOL:460V) + CAPPRE:IEC , ((MOVOL:230V , MOVOL:575V) + COOL:AIR , MOVOL:460V) + CAPPRE:ULCUL + CAPPRM:ASME + FREQ:60HZ)	
	1088 0039 07	3	TERMINAL	**(12/12/2018 - 24/02/2019)** ((((CAPPRM:AS1210 , CAPPRM:CE , CAPPRM:MHLW , CAPPRM:MOM) + MOVOL:400V , (CAPPRM:CE + MOVOL:500V , CAPPRM:MHLW + MOVOL:200V) + COOL:AIR) + FREQ:50HZ , (CAPPRM:ASME , CAPPRM:MHLW) + FREQ:60HZ + MOVOL:460V) + CAPPRE:IEC , ((MOVOL:230V , MOVOL:575V) + COOL:AIR , MOVOL:460V) + CAPPRE:ULCUL + CAPPRM:ASME + FREQ:60HZ) **(25/02/2019 - 04/02/2020)** ((((CAPPRM:AS1210 , CAPPRM:CE , CAPPRM:MHLW , CAPPRM:MOM) + MOVOL:400V , CAPPRM:CE + MOVOL:500V , CAPPRM:MHLW + MOVOL:200V) + FREQ:50HZ , (CAPPRM:ASME , CAPPRM:MHLW) + FREQ:60HZ + MOVOL:460V) + CAPPRE:IEC , (MOVOL:230V , MOVOL:460V , MOVOL:575V) + CAPPRE:ULCUL + CAPPRM:ASME + FREQ:60HZ) + COOL:AIR **(05/02/2020 - 30/12/2027)** (CAPPRE:IEC + CAPPRM:MHLW + FREQ:50HZ + MOVOL:200V , CAPPRE:ULCUL + CAPPRM:ASME + FREQ:60HZ + MOVOL:230V) + COOL:AIR	X152

Legend:

CAPPRE:IEC - Component approval electrical:IEC
CAPPRE:ULCUL - Component approval electrical:UL/cUL
CAPPRM:AS1210 - Component approval mechanical:AS1210
CAPPRM:ASME - Component approval mechanical:ASME
CAPPRM:CE - Component approval mechanical:CE
CAPPRM:MHLW - Component approval mechanical:MHLW
CAPPRM:MOM - Component approval mechanical:MOM
COOL:AIR - Cooling:Air cooled
FREQ:50HZ - Frequency:50 Hz
FREQ:60HZ - Frequency:60 Hz
IDRY:Y - Integrated dryer:Yes
MODEL:GA110VP_16 - Model:GA 110VSD+
MOVOL:200V - Supply voltage:200 V
MOVOL:230V - Supply voltage:230 V
MOVOL:400V - Supply voltage:400 V
MOVOL:460V - Supply voltage:460 V
MOVOL:500V - Supply voltage:500 V
MOVOL:575V - Supply voltage:575 V

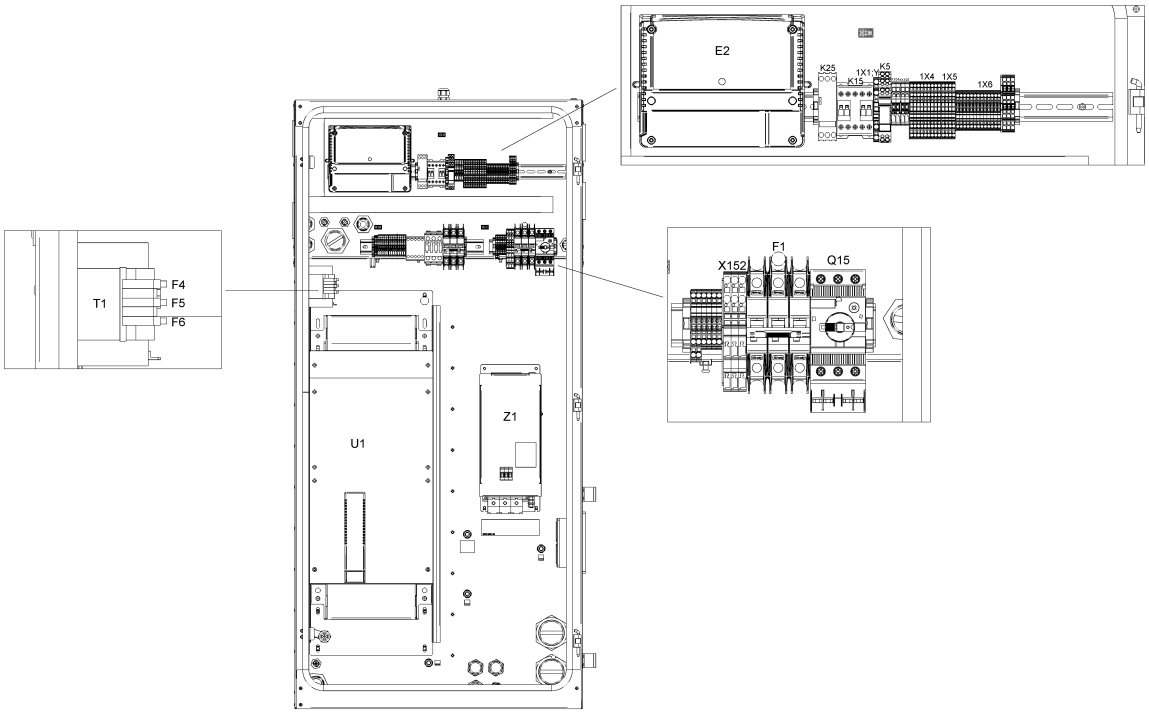
E2
K25
K15
1X1
K5
1X4
1X5
1X6
T1
F4
F5
F6
X152
F1
Q15
U1
Z1

21.27 - Cubicle components GA 110 VSD+ - (200V-400V-500V/50Hz, 460V/60Hz - IEC, 230V-460V-575V/60Hz - UL-cUL) - Full-Feature (12/12/2018 - 04/02/2020)

(((MOVOL:200V , MOVOL:400V , MOVOL:500V) + FREQ:50HZ , FREQ:60HZ + MOVOL:460V) + CAPPRE:IEC , (MOVOL:230V , MOVOL:460V , MOVOL:575V) + CAPPRE:ULCUL + FREQ:60HZ) + IDRY:Y + MODEL:GA110VP_16

Ref	Part Number	Qty	Name	Validity	EL
	1088 0039 05	1	PLATE	**(12/12/2018 - 24/02/2019)** ((((CAPPRM:AS1210 , CAPPRM:CE , CAPPRM:MHLW , CAPPRM:MOM) + MOVOL:400V , (CAPPRM:CE + MOVOL:500V , CAPPRM:MHLW + MOVOL:200V) + COOL:AIR) + FREQ:50HZ , (CAPPRM:ASME , CAPPRM:MHLW) + FREQ:60HZ + MOVOL:460V) + CAPPRE:IEC , ((MOVOL:230V , MOVOL:575V) + COOL:AIR , MOVOL:460V) + CAPPRE:ULCUL + CAPPRM:ASME + FREQ:60HZ) **(25/02/2019 - 04/02/2020)** ((((CAPPRM:AS1210 , CAPPRM:CE , CAPPRM:MHLW , CAPPRM:MOM) + MOVOL:400V , CAPPRM:CE + MOVOL:500V , CAPPRM:MHLW + MOVOL:200V) + FREQ:50HZ , (CAPPRM:ASME , CAPPRM:MHLW) + FREQ:60HZ + MOVOL:460V) + CAPPRE:IEC , (MOVOL:230V , MOVOL:460V , MOVOL:575V) + CAPPRE:ULCUL + CAPPRM:ASME + FREQ:60HZ) + COOL:AIR **(05/02/2020 - 30/12/2027)** (CAPPRE:IEC + CAPPRM:MHLW + FREQ:50HZ + MOVOL:200V , CAPPRE:ULCUL + CAPPRM:ASME + FREQ:60HZ + MOVOL:230V) + COOL:AIR	X152
	1088 0039 26	1	CONNECTOR	**(12/12/2018 - 24/02/2019)** ((((CAPPRM:AS1210 , CAPPRM:CE , CAPPRM:MHLW , CAPPRM:MOM) + MOVOL:400V , (CAPPRM:CE + MOVOL:500V , CAPPRM:MHLW + MOVOL:200V) + COOL:AIR) + FREQ:50HZ , (CAPPRM:ASME , CAPPRM:MHLW) + FREQ:60HZ + MOVOL:460V) + CAPPRE:IEC , ((MOVOL:230V , MOVOL:575V) + COOL:AIR , MOVOL:460V) + CAPPRE:ULCUL + CAPPRM:ASME + FREQ:60HZ) **(25/02/2019 - 04/02/2020)** ((((CAPPRM:AS1210 , CAPPRM:CE , CAPPRM:MHLW , CAPPRM:MOM) + MOVOL:400V , CAPPRM:CE + MOVOL:500V , CAPPRM:MHLW + MOVOL:200V) + FREQ:50HZ , (CAPPRM:ASME , CAPPRM:MHLW) + FREQ:60HZ + MOVOL:460V) + CAPPRE:IEC , (MOVOL:230V , MOVOL:460V , MOVOL:575V) + CAPPRE:ULCUL + CAPPRM:ASME + FREQ:60HZ) + COOL:AIR **(05/02/2020 - 30/12/2027)** (CAPPRE:IEC + CAPPRM:MHLW + FREQ:50HZ + MOVOL:200V , CAPPRE:ULCUL + CAPPRM:ASME + FREQ:60HZ + MOVOL:230V) + COOL:AIR	
	Electrical legend:	X152 (remove coding pin 1,3)			
	1088 0037 99	4	PIN	**(12/12/2018 - 24/02/2019)** ((((CAPPRM:AS1210 , CAPPRM:CE , CAPPRM:MHLW , CAPPRM:MOM) + MOVOL:400V , (CAPPRM:CE + MOVOL:500V , CAPPRM:MHLW + MOVOL:200V) + COOL:AIR) + FREQ:50HZ , (CAPPRM:ASME , CAPPRM:MHLW) + FREQ:60HZ + MOVOL:460V) + CAPPRE:IEC , ((MOVOL:230V , MOVOL:575V) + COOL:AIR , MOVOL:460V) + CAPPRE:ULCUL + CAPPRM:ASME + FREQ:60HZ) **(25/02/2019 - 04/02/2020)** ((((CAPPRM:AS1210 , CAPPRM:CE , CAPPRM:MHLW , CAPPRM:MOM) + MOVOL:400V , CAPPRM:CE + MOVOL:500V , CAPPRM:MHLW + MOVOL:200V) + FREQ:50HZ , (CAPPRM:ASME , CAPPRM:MHLW) + FREQ:60HZ + MOVOL:460V) + CAPPRE:IEC , (MOVOL:230V , MOVOL:460V , MOVOL:575V) + CAPPRE:ULCUL + CAPPRM:ASME + FREQ:60HZ) + COOL:AIR **(05/02/2020 - 30/12/2027)** (CAPPRE:IEC + CAPPRM:MHLW + FREQ:50HZ + MOVOL:200V , CAPPRE:ULCUL + CAPPRM:ASME + FREQ:60HZ + MOVOL:230V) + COOL:AIR	X152:1; 3

Legend:

CAPPRE:IEC - Component approval electrical:IEC
CAPPRE:ULCUL - Component approval electrical:UL/cUL
CAPPRM:AS1210 - Component approval mechanical:AS1210
CAPPRM:ASME - Component approval mechanical:ASME
CAPPRM:CE - Component approval mechanical:CE
CAPPRM:MHLW - Component approval mechanical:MHLW
CAPPRM:MOM - Component approval mechanical:MOM
COOL:AIR - Cooling:Air cooled
FREQ:50HZ - Frequency:50 Hz
FREQ:60HZ - Frequency:60 Hz
IDRY:Y - Integrated dryer:Yes
MODEL:GA110VP_16 - Model:GA 110VSD+
MOVOL:200V - Supply voltage:200 V
MOVOL:230V - Supply voltage:230 V
MOVOL:400V - Supply voltage:400 V
MOVOL:460V - Supply voltage:460 V
MOVOL:500V - Supply voltage:500 V
MOVOL:575V - Supply voltage:575 V

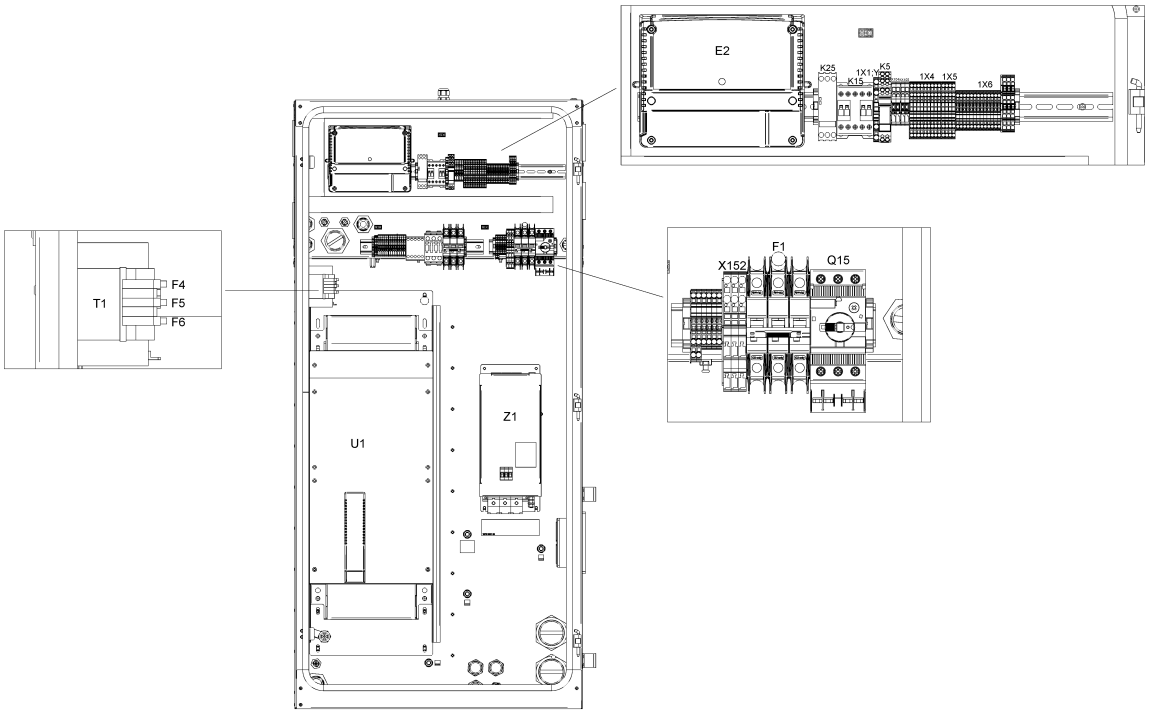
E2
K25
K15
1X1
K5
1X4
1X5
1X6
T1
F4
F5
F6
X152
F1
Q15
U1
Z1

21.27 - Cubicle components GA 110 VSD+ - (200V-400V-500V/50Hz, 460V/60Hz - IEC, 230V-460V-575V/60Hz - UL-cUL) - Full-Feature (12/12/2018 - 04/02/2020)

(((MOVOL:200V , MOVOL:400V , MOVOL:500V) + FREQ:50HZ , FREQ:60HZ + MOVOL:460V) + CAPPRE:IEC , (MOVOL:230V , MOVOL:460V , MOVOL:575V) + CAPPRE:ULCUL + FREQ:60HZ) + IDRY:Y + MODEL:GA110VP_16

Ref	Part Number	Qty	Name	Validity	EL
	~~1088 0031 81~~	7	END STOP BRACKET 6MM	**(12/12/2018 - 24/02/2019)** ((((CAPPRM:AS1210 , CAPPRM:CE , CAPPRM:MHLW , CAPPRM:MOM) + MOVOL:400V , (CAPPRM:CE + MOVOL:500V , CAPPRM:MHLW + MOVOL:200V) + COOL:AIR) + FREQ:50HZ , (CAPPRM:ASME , CAPPRM:MHLW) + FREQ:60HZ + MOVOL:460V) + CAPPRE:IEC , ((MOVOL:230V , MOVOL:575V) + COOL:AIR , MOVOL:460V) + CAPPRE:ULCUL + CAPPRM:ASME + FREQ:60HZ) **(25/02/2019 - 04/02/2020)** ((((CAPPRM:AS1210 , CAPPRM:CE , CAPPRM:MHLW , CAPPRM:MOM) + MOVOL:400V , CAPPRM:CE + MOVOL:500V , CAPPRM:MHLW + MOVOL:200V) + FREQ:50HZ , (CAPPRM:ASME , CAPPRM:MHLW) + FREQ:60HZ + MOVOL:460V) + CAPPRE:IEC , (MOVOL:230V , MOVOL:460V , MOVOL:575V) + CAPPRE:ULCUL + CAPPRM:ASME + FREQ:60HZ) + COOL:AIR **(05/02/2020 - 30/12/2027)** (CAPPRE:IEC + CAPPRM:MHLW + FREQ:50HZ + MOVOL:200V , CAPPRE:ULCUL + CAPPRM:ASME + FREQ:60HZ + MOVOL:230V) + COOL:AIR	
	Electrical legend:	Connector/terminal rail			
	Substituted by:	1089 0577 82 - END RETAINER (quantity: 1)			
	1088 0039 38	2	TERMINAL	**(12/12/2018 - 24/02/2019)** ((((CAPPRM:AS1210 , CAPPRM:CE , CAPPRM:MHLW , CAPPRM:MOM) + MOVOL:400V , (CAPPRM:CE + MOVOL:500V , CAPPRM:MHLW + MOVOL:200V) + COOL:AIR) + FREQ:50HZ , (CAPPRM:ASME , CAPPRM:MHLW) + FREQ:60HZ + MOVOL:460V) + CAPPRE:IEC , ((MOVOL:230V , MOVOL:575V) + COOL:AIR , MOVOL:460V) + CAPPRE:ULCUL + CAPPRM:ASME + FREQ:60HZ) **(25/02/2019 - 04/02/2020)** ((((CAPPRM:AS1210 , CAPPRM:CE , CAPPRM:MHLW , CAPPRM:MOM) + MOVOL:400V , CAPPRM:CE + MOVOL:500V , CAPPRM:MHLW + MOVOL:200V) + FREQ:50HZ , (CAPPRM:ASME , CAPPRM:MHLW) + FREQ:60HZ + MOVOL:460V) + CAPPRE:IEC , (MOVOL:230V , MOVOL:460V , MOVOL:575V) + CAPPRE:ULCUL + CAPPRM:ASME + FREQ:60HZ) + COOL:AIR **(05/02/2020 - 30/12/2027)** (CAPPRE:IEC + CAPPRM:MHLW + FREQ:50HZ + MOVOL:200V , CAPPRE:ULCUL + CAPPRM:ASME + FREQ:60HZ + MOVOL:230V) + COOL:AIR	1X11:2,5
	1088 0039 40	1	PLATE	**(12/12/2018 - 24/02/2019)** ((((CAPPRM:AS1210 , CAPPRM:CE , CAPPRM:MHLW , CAPPRM:MOM) + MOVOL:400V , (CAPPRM:CE + MOVOL:500V , CAPPRM:MHLW + MOVOL:200V) + COOL:AIR) + FREQ:50HZ , (CAPPRM:ASME , CAPPRM:MHLW) + FREQ:60HZ + MOVOL:460V) + CAPPRE:IEC , ((MOVOL:230V , MOVOL:575V) + COOL:AIR , MOVOL:460V) + CAPPRE:ULCUL + CAPPRM:ASME + FREQ:60HZ) **(25/02/2019 - 04/02/2020)** ((((CAPPRM:AS1210 , CAPPRM:CE , CAPPRM:MHLW , CAPPRM:MOM) + MOVOL:400V , CAPPRM:CE + MOVOL:500V , CAPPRM:MHLW + MOVOL:200V) + FREQ:50HZ , (CAPPRM:ASME , CAPPRM:MHLW) + FREQ:60HZ + MOVOL:460V) + CAPPRE:IEC , (MOVOL:230V , MOVOL:460V , MOVOL:575V) + CAPPRE:ULCUL + CAPPRM:ASME + FREQ:60HZ) + COOL:AIR **(05/02/2020 - 30/12/2027)** (CAPPRE:IEC + CAPPRM:MHLW + FREQ:50HZ + MOVOL:200V , CAPPRE:ULCUL + CAPPRM:ASME + FREQ:60HZ + MOVOL:230V) + COOL:AIR	1X11

Legend:

CAPPRE:IEC - Component approval electrical:IEC
CAPPRE:ULCUL - Component approval electrical:UL/cUL
CAPPRM:AS1210 - Component approval mechanical:AS1210
CAPPRM:ASME - Component approval mechanical:ASME
CAPPRM:CE - Component approval mechanical:CE
CAPPRM:MHLW - Component approval mechanical:MHLW
CAPPRM:MOM - Component approval mechanical:MOM
COOL:AIR - Cooling:Air cooled
FREQ:50HZ - Frequency:50 Hz
FREQ:60HZ - Frequency:60 Hz
IDRY:Y - Integrated dryer:Yes
MODEL:GA110VP_16 - Model:GA 110VSD+
MOVOL:200V - Supply voltage:200 V
MOVOL:230V - Supply voltage:230 V
MOVOL:400V - Supply voltage:400 V
MOVOL:460V - Supply voltage:460 V
MOVOL:500V - Supply voltage:500 V
MOVOL:575V - Supply voltage:575 V

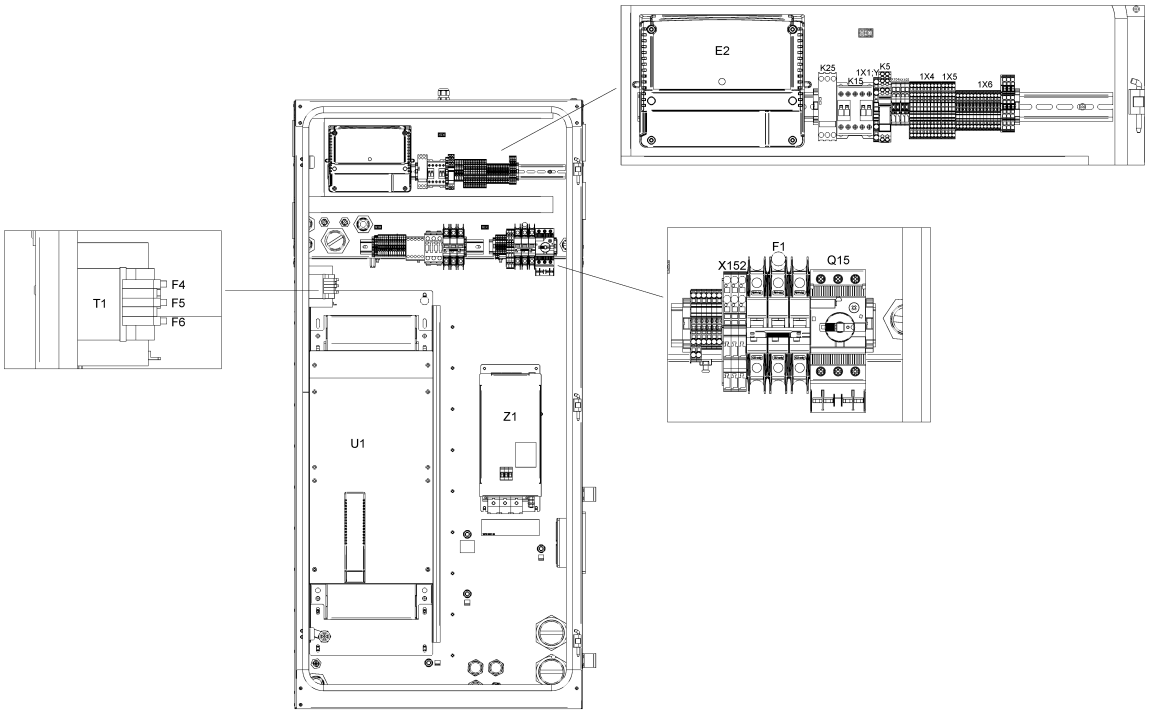
E2
K25
K15
1X1
K5
1X4
1X5
1X6
T1
F4
F5
F6
X152
F1
Q15
U1
Z1

Ref	Part Number	Qty	Name	Validity	EL
	1088 0039 34	4	TERMINAL	**(12/12/2018 - 24/02/2019)** ((((CAPPRM:AS1210 , CAPPRM:CE , CAPPRM:MHLW , CAPPRM:MOM) + MOVOL:400V , (CAPPRM:CE + MOVOL:500V , CAPPRM:MHLW + MOVOL:200V) + COOL:AIR) + FREQ:50HZ , (CAPPRM:ASME , CAPPRM:MHLW) + FREQ:60HZ + MOVOL:460V) + CAPPRE:IEC , ((MOVOL:230V , MOVOL:575V) + COOL:AIR , MOVOL:460V) + CAPPRE:ULCUL + CAPPRM:ASME + FREQ:60HZ) **(25/02/2019 - 04/02/2020)** ((((CAPPRM:AS1210 , CAPPRM:CE , CAPPRM:MHLW , CAPPRM:MOM) + MOVOL:400V , CAPPRM:CE + MOVOL:500V , CAPPRM:MHLW + MOVOL:200V) + FREQ:50HZ , (CAPPRM:ASME , CAPPRM:MHLW) + FREQ:60HZ + MOVOL:460V) + CAPPRE:IEC , (MOVOL:230V , MOVOL:460V , MOVOL:575V) + CAPPRE:ULCUL + CAPPRM:ASME + FREQ:60HZ) + COOL:AIR **(05/02/2020 - 30/12/2027)** (CAPPRE:IEC + CAPPRM:MHLW + FREQ:50HZ + MOVOL:200V , CAPPRE:ULCUL + CAPPRM:ASME + FREQ:60HZ + MOVOL:230V) + COOL:AIR	
	Electrical legend:	1X11:30,301,34			
	1088 0039 35	1	PLATE	**(12/12/2018 - 24/02/2019)** ((((CAPPRM:AS1210 , CAPPRM:CE , CAPPRM:MHLW , CAPPRM:MOM) + MOVOL:400V , (CAPPRM:CE + MOVOL:500V , CAPPRM:MHLW + MOVOL:200V) + COOL:AIR) + FREQ:50HZ , (CAPPRM:ASME , CAPPRM:MHLW) + FREQ:60HZ + MOVOL:460V) + CAPPRE:IEC , ((MOVOL:230V , MOVOL:575V) + COOL:AIR , MOVOL:460V) + CAPPRE:ULCUL + CAPPRM:ASME + FREQ:60HZ) **(25/02/2019 - 04/02/2020)** ((((CAPPRM:AS1210 , CAPPRM:CE , CAPPRM:MHLW , CAPPRM:MOM) + MOVOL:400V , CAPPRM:CE + MOVOL:500V , CAPPRM:MHLW + MOVOL:200V) + FREQ:50HZ , (CAPPRM:ASME , CAPPRM:MHLW) + FREQ:60HZ + MOVOL:460V) + CAPPRE:IEC , (MOVOL:230V , MOVOL:460V , MOVOL:575V) + CAPPRE:ULCUL + CAPPRM:ASME + FREQ:60HZ) + COOL:AIR **(05/02/2020 - 30/12/2027)** (CAPPRE:IEC + CAPPRM:MHLW + FREQ:50HZ + MOVOL:200V , CAPPRE:ULCUL + CAPPRM:ASME + FREQ:60HZ + MOVOL:230V) + COOL:AIR	1X11
	1088 0039 04	2	TERMINAL	**(12/12/2018 - 24/02/2019)** ((((CAPPRM:AS1210 , CAPPRM:CE , CAPPRM:MHLW , CAPPRM:MOM) + MOVOL:400V , (CAPPRM:CE + MOVOL:500V , CAPPRM:MHLW + MOVOL:200V) + COOL:AIR) + FREQ:50HZ , (CAPPRM:ASME , CAPPRM:MHLW) + FREQ:60HZ + MOVOL:460V) + CAPPRE:IEC , ((MOVOL:230V , MOVOL:575V) + COOL:AIR , MOVOL:460V) + CAPPRE:ULCUL + CAPPRM:ASME + FREQ:60HZ) **(25/02/2019 - 04/02/2020)** ((((CAPPRM:AS1210 , CAPPRM:CE , CAPPRM:MHLW , CAPPRM:MOM) + MOVOL:400V , CAPPRM:CE + MOVOL:500V , CAPPRM:MHLW + MOVOL:200V) + FREQ:50HZ , (CAPPRM:ASME , CAPPRM:MHLW) + FREQ:60HZ + MOVOL:460V) + CAPPRE:IEC , (MOVOL:230V , MOVOL:460V , MOVOL:575V) + CAPPRE:ULCUL + CAPPRM:ASME + FREQ:60HZ) + COOL:AIR **(05/02/2020 - 30/12/2027)** (CAPPRE:IEC + CAPPRM:MHLW + FREQ:50HZ + MOVOL:200V , CAPPRE:ULCUL + CAPPRM:ASME + FREQ:60HZ + MOVOL:230V) + COOL:AIR	X104a

Legend:

CAPPRE:IEC - Component approval electrical:IEC
CAPPRE:ULCUL - Component approval electrical:UL/cUL
CAPPRM:AS1210 - Component approval mechanical:AS1210
CAPPRM:ASME - Component approval mechanical:ASME
CAPPRM:CE - Component approval mechanical:CE
CAPPRM:MHLW - Component approval mechanical:MHLW
CAPPRM:MOM - Component approval mechanical:MOM
COOL:AIR - Cooling:Air cooled
FREQ:50HZ - Frequency:50 Hz
FREQ:60HZ - Frequency:60 Hz
IDRY:Y - Integrated dryer:Yes
MODEL:GA110VP_16 - Model:GA 110VSD+
MOVOL:200V - Supply voltage:200 V
MOVOL:230V - Supply voltage:230 V
MOVOL:400V - Supply voltage:400 V
MOVOL:460V - Supply voltage:460 V
MOVOL:500V - Supply voltage:500 V
MOVOL:575V - Supply voltage:575 V

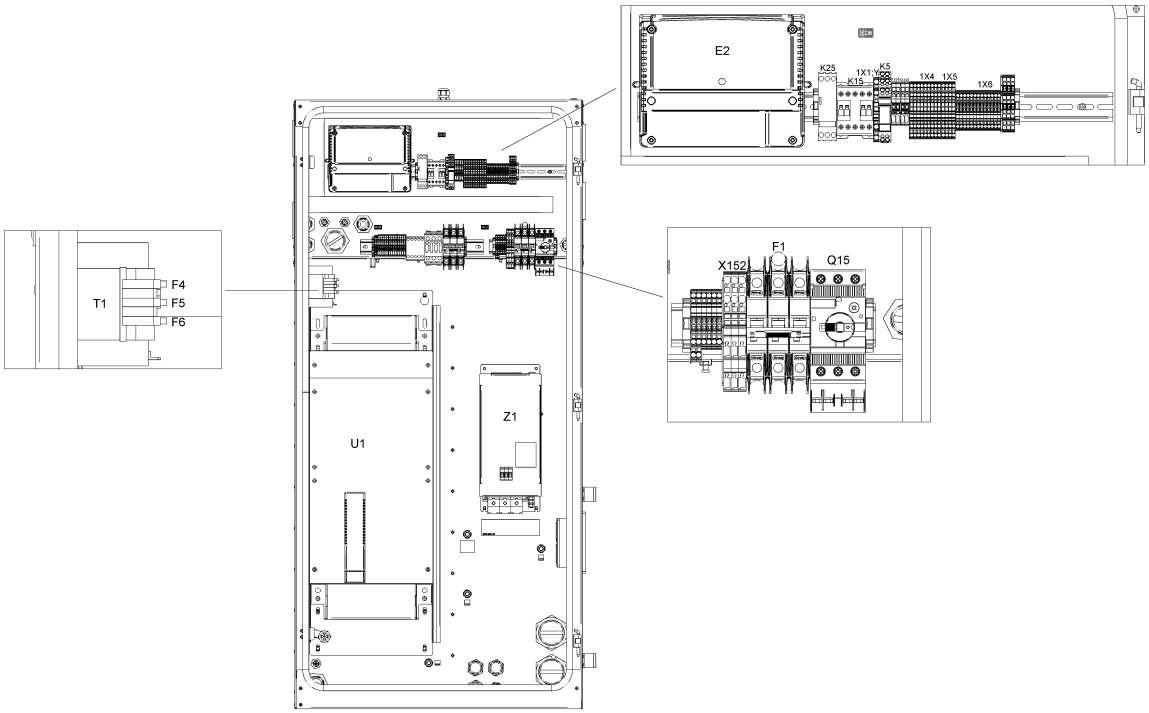
E2
K25
K15
1X1
K5
1X4
1X5
1X6
T1
F4
F5
F6
X152
F1
Q15
U1
Z1

21.27 - Cubicle components GA 110 VSD+ - (200V-400V-500V/50Hz, 460V/60Hz - IEC, 230V-460V-575V/60Hz - UL-cUL) - Full-Feature (12/12/2018 - 04/02/2020)

(((MOVOL:200V , MOVOL:400V , MOVOL:500V) + FREQ:50HZ , FREQ:60HZ + MOVOL:460V) + CAPPRE:IEC , (MOVOL:230V , MOVOL:460V , MOVOL:575V) + CAPPRE:ULCUL + FREQ:60HZ) + IDRY:Y + MODEL:GA110VP_16

Ref	Part Number	Qty	Name	Validity	EL
	1088 0037 99	2	PIN	**(12/12/2018 - 24/02/2019)** ((((CAPPRM:AS1210 , CAPPRM:CE , CAPPRM:MHLW , CAPPRM:MOM) + MOVOL:400V , (CAPPRM:CE + MOVOL:500V , CAPPRM:MHLW + MOVOL:200V) + COOL:AIR) + FREQ:50HZ , (CAPPRM:ASME , CAPPRM:MHLW) + FREQ:60HZ + MOVOL:460V) + CAPPRE:IEC , ((MOVOL:230V , MOVOL:575V) + COOL:AIR , MOVOL:460V) + CAPPRE:ULCUL + CAPPRM:ASME + FREQ:60HZ) **(25/02/2019 - 04/02/2020)** ((((CAPPRM:AS1210 , CAPPRM:CE , CAPPRM:MHLW , CAPPRM:MOM) + MOVOL:400V , CAPPRM:CE + MOVOL:500V , CAPPRM:MHLW + MOVOL:200V) + FREQ:50HZ , (CAPPRM:ASME , CAPPRM:MHLW) + FREQ:60HZ + MOVOL:460V) + CAPPRE:IEC , (MOVOL:230V , MOVOL:460V , MOVOL:575V) + CAPPRE:ULCUL + CAPPRM:ASME + FREQ:60HZ) + COOL:AIR **(05/02/2020 - 30/12/2027)** (CAPPRE:IEC + CAPPRM:MHLW + FREQ:50HZ + MOVOL:200V , CAPPRE:ULCUL + CAPPRM:ASME + FREQ:60HZ + MOVOL:230V) + COOL:AIR	X104a/X105
	1088 0039 02	1	PLATE	**(12/12/2018 - 24/02/2019)** ((((CAPPRM:AS1210 , CAPPRM:CE , CAPPRM:MHLW , CAPPRM:MOM) + MOVOL:400V , (CAPPRM:CE + MOVOL:500V , CAPPRM:MHLW + MOVOL:200V) + COOL:AIR) + FREQ:50HZ , (CAPPRM:ASME , CAPPRM:MHLW) + FREQ:60HZ + MOVOL:460V) + CAPPRE:IEC , ((MOVOL:230V , MOVOL:575V) + COOL:AIR , MOVOL:460V) + CAPPRE:ULCUL + CAPPRM:ASME + FREQ:60HZ) **(25/02/2019 - 04/02/2020)** ((((CAPPRM:AS1210 , CAPPRM:CE , CAPPRM:MHLW , CAPPRM:MOM) + MOVOL:400V , CAPPRM:CE + MOVOL:500V , CAPPRM:MHLW + MOVOL:200V) + FREQ:50HZ , (CAPPRM:ASME , CAPPRM:MHLW) + FREQ:60HZ + MOVOL:460V) + CAPPRE:IEC , (MOVOL:230V , MOVOL:460V , MOVOL:575V) + CAPPRE:ULCUL + CAPPRM:ASME + FREQ:60HZ) + COOL:AIR **(05/02/2020 - 30/12/2027)** (CAPPRE:IEC + CAPPRM:MHLW + FREQ:50HZ + MOVOL:200V , CAPPRE:ULCUL + CAPPRM:ASME + FREQ:60HZ + MOVOL:230V) + COOL:AIR	X104a
	1088 0039 07	2	TERMINAL	**(12/12/2018 - 24/02/2019)** ((((CAPPRM:AS1210 , CAPPRM:CE , CAPPRM:MHLW , CAPPRM:MOM) + MOVOL:400V , (CAPPRM:CE + MOVOL:500V , CAPPRM:MHLW + MOVOL:200V) + COOL:AIR) + FREQ:50HZ , (CAPPRM:ASME , CAPPRM:MHLW) + FREQ:60HZ + MOVOL:460V) + CAPPRE:IEC , ((MOVOL:230V , MOVOL:575V) + COOL:AIR , MOVOL:460V) + CAPPRE:ULCUL + CAPPRM:ASME + FREQ:60HZ) **(25/02/2019 - 04/02/2020)** ((((CAPPRM:AS1210 , CAPPRM:CE , CAPPRM:MHLW , CAPPRM:MOM) + MOVOL:400V , CAPPRM:CE + MOVOL:500V , CAPPRM:MHLW + MOVOL:200V) + FREQ:50HZ , (CAPPRM:ASME , CAPPRM:MHLW) + FREQ:60HZ + MOVOL:460V) + CAPPRE:IEC , (MOVOL:230V , MOVOL:460V , MOVOL:575V) + CAPPRE:ULCUL + CAPPRM:ASME + FREQ:60HZ) + COOL:AIR **(05/02/2020 - 30/12/2027)** (CAPPRE:IEC + CAPPRM:MHLW + FREQ:50HZ + MOVOL:200V , CAPPRE:ULCUL + CAPPRM:ASME + FREQ:60HZ + MOVOL:230V) + COOL:AIR	X105

Legend:

CAPPRE:IEC - Component approval electrical:IEC
CAPPRE:ULCUL - Component approval electrical:UL/cUL
CAPPRM:AS1210 - Component approval mechanical:AS1210
CAPPRM:ASME - Component approval mechanical:ASME
CAPPRM:CE - Component approval mechanical:CE
CAPPRM:MHLW - Component approval mechanical:MHLW
CAPPRM:MOM - Component approval mechanical:MOM
COOL:AIR - Cooling:Air cooled
FREQ:50HZ - Frequency:50 Hz
FREQ:60HZ - Frequency:60 Hz
IDRY:Y - Integrated dryer:Yes
MODEL:GA110VP_16 - Model:GA 110VSD+
MOVOL:200V - Supply voltage:200 V
MOVOL:230V - Supply voltage:230 V
MOVOL:400V - Supply voltage:400 V
MOVOL:460V - Supply voltage:460 V
MOVOL:500V - Supply voltage:500 V
MOVOL:575V - Supply voltage:575 V

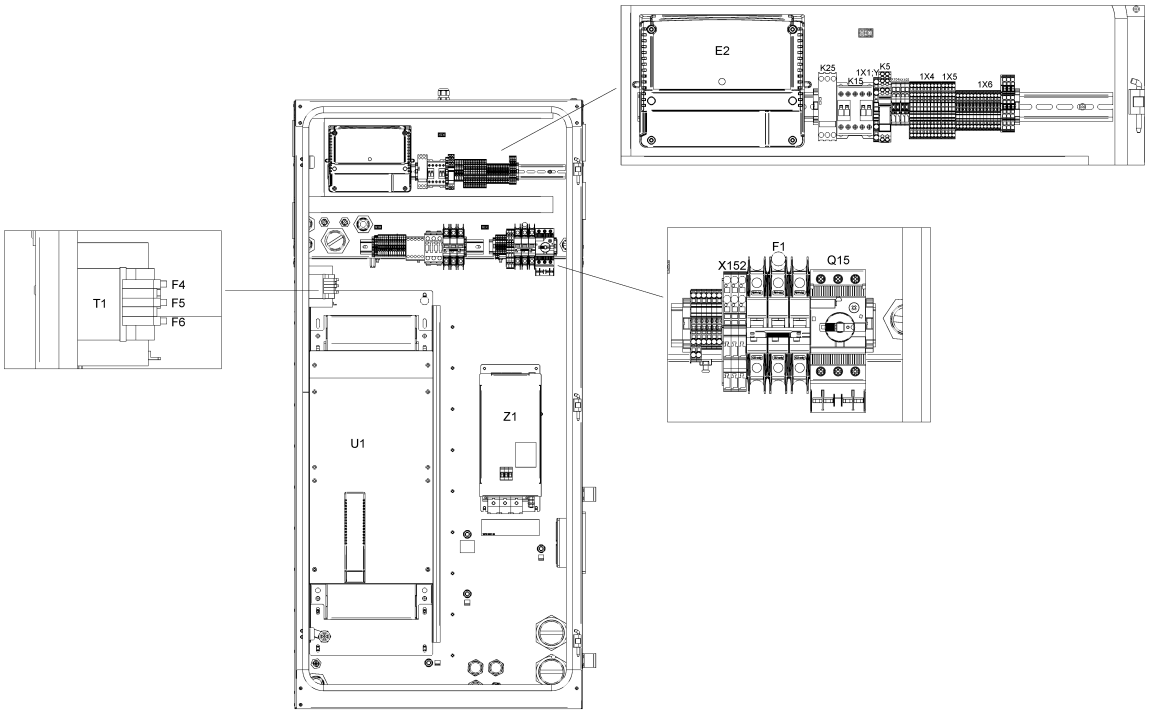
E2
K25
K15
1X1
K5
1X4
1X5
1X6
T1
F4
F5
F6
X152
F1
Q15
U1
Z1

21.27 - Cubicle components GA 110 VSD+ - (200V-400V-500V/50Hz, 460V/60Hz - IEC, 230V-460V-575V/60Hz - UL-cUL) - Full-Feature (12/12/2018 - 04/02/2020)

(((MOVOL:200V , MOVOL:400V , MOVOL:500V) + FREQ:50HZ , FREQ:60HZ + MOVOL:460V) + CAPPRE:IEC , (MOVOL:230V , MOVOL:460V , MOVOL:575V) + CAPPRE:ULCUL + FREQ:60HZ) + IDRY:Y + MODEL:GA110VP_16

Ref	Part Number	Qty	Name	Validity	EL
	1088 0039 05	1	PLATE	**(12/12/2018 - 24/02/2019)** ((((CAPPRM:AS1210 , CAPPRM:CE , CAPPRM:MHLW , CAPPRM:MOM) + MOVOL:400V , (CAPPRM:CE + MOVOL:500V , CAPPRM:MHLW + MOVOL:200V) + COOL:AIR) + FREQ:50HZ , (CAPPRM:ASME , CAPPRM:MHLW) + FREQ:60HZ + MOVOL:460V) + CAPPRE:IEC , ((MOVOL:230V , MOVOL:575V) + COOL:AIR , MOVOL:460V) + CAPPRE:ULCUL + CAPPRM:ASME + FREQ:60HZ) **(25/02/2019 - 04/02/2020)** ((((CAPPRM:AS1210 , CAPPRM:CE , CAPPRM:MHLW , CAPPRM:MOM) + MOVOL:400V , CAPPRM:CE + MOVOL:500V , CAPPRM:MHLW + MOVOL:200V) + FREQ:50HZ , (CAPPRM:ASME , CAPPRM:MHLW) + FREQ:60HZ + MOVOL:460V) + CAPPRE:IEC , (MOVOL:230V , MOVOL:460V , MOVOL:575V) + CAPPRE:ULCUL + CAPPRM:ASME + FREQ:60HZ) + COOL:AIR **(05/02/2020 - 30/12/2027)** (CAPPRE:IEC + CAPPRM:MHLW + FREQ:50HZ + MOVOL:200V , CAPPRE:ULCUL + CAPPRM:ASME + FREQ:60HZ + MOVOL:230V) + COOL:AIR	X105
	1088 0039 34	13	TERMINAL	**(12/12/2018 - 24/02/2019)** ((((CAPPRM:AS1210 , CAPPRM:CE , CAPPRM:MHLW , CAPPRM:MOM) + MOVOL:400V , (CAPPRM:CE + MOVOL:500V , CAPPRM:MHLW + MOVOL:200V) + COOL:AIR) + FREQ:50HZ , (CAPPRM:ASME , CAPPRM:MHLW) + FREQ:60HZ + MOVOL:460V) + CAPPRE:IEC , ((MOVOL:230V , MOVOL:575V) + COOL:AIR , MOVOL:460V) + CAPPRE:ULCUL + CAPPRM:ASME + FREQ:60HZ) **(25/02/2019 - 04/02/2020)** ((((CAPPRM:AS1210 , CAPPRM:CE , CAPPRM:MHLW , CAPPRM:MOM) + MOVOL:400V , CAPPRM:CE + MOVOL:500V , CAPPRM:MHLW + MOVOL:200V) + FREQ:50HZ , (CAPPRM:ASME , CAPPRM:MHLW) + FREQ:60HZ + MOVOL:460V) + CAPPRE:IEC , (MOVOL:230V , MOVOL:460V , MOVOL:575V) + CAPPRE:ULCUL + CAPPRM:ASME + FREQ:60HZ) + COOL:AIR **(05/02/2020 - 30/12/2027)** (CAPPRE:IEC + CAPPRM:MHLW + FREQ:50HZ + MOVOL:200V , CAPPRE:ULCUL + CAPPRM:ASME + FREQ:60HZ + MOVOL:230V) + COOL:AIR	1X6
	1088 0037 69	3	CONNECTOR	**(12/12/2018 - 24/02/2019)** ((((CAPPRM:AS1210 , CAPPRM:CE , CAPPRM:MHLW , CAPPRM:MOM) + MOVOL:400V , (CAPPRM:CE + MOVOL:500V , CAPPRM:MHLW + MOVOL:200V) + COOL:AIR) + FREQ:50HZ , (CAPPRM:ASME , CAPPRM:MHLW) + FREQ:60HZ + MOVOL:460V) + CAPPRE:IEC , ((MOVOL:230V , MOVOL:575V) + COOL:AIR , MOVOL:460V) + CAPPRE:ULCUL + CAPPRM:ASME + FREQ:60HZ) **(25/02/2019 - 04/02/2020)** ((((CAPPRM:AS1210 , CAPPRM:CE , CAPPRM:MHLW , CAPPRM:MOM) + MOVOL:400V , CAPPRM:CE + MOVOL:500V , CAPPRM:MHLW + MOVOL:200V) + FREQ:50HZ , (CAPPRM:ASME , CAPPRM:MHLW) + FREQ:60HZ + MOVOL:460V) + CAPPRE:IEC , (MOVOL:230V , MOVOL:460V , MOVOL:575V) + CAPPRE:ULCUL + CAPPRM:ASME + FREQ:60HZ) + COOL:AIR **(05/02/2020 - 30/12/2027)** (CAPPRE:IEC + CAPPRM:MHLW + FREQ:50HZ + MOVOL:200V , CAPPRE:ULCUL + CAPPRM:ASME + FREQ:60HZ + MOVOL:230V) + COOL:AIR	1X7

Legend:

CAPPRE:IEC - Component approval electrical:IEC
CAPPRE:ULCUL - Component approval electrical:UL/cUL
CAPPRM:AS1210 - Component approval mechanical:AS1210
CAPPRM:ASME - Component approval mechanical:ASME
CAPPRM:CE - Component approval mechanical:CE
CAPPRM:MHLW - Component approval mechanical:MHLW
CAPPRM:MOM - Component approval mechanical:MOM
COOL:AIR - Cooling:Air cooled
FREQ:50HZ - Frequency:50 Hz
FREQ:60HZ - Frequency:60 Hz
IDRY:Y - Integrated dryer:Yes
MODEL:GA110VP_16 - Model:GA 110VSD+
MOVOL:200V - Supply voltage:200 V
MOVOL:230V - Supply voltage:230 V
MOVOL:400V - Supply voltage:400 V
MOVOL:460V - Supply voltage:460 V
MOVOL:500V - Supply voltage:500 V
MOVOL:575V - Supply voltage:575 V

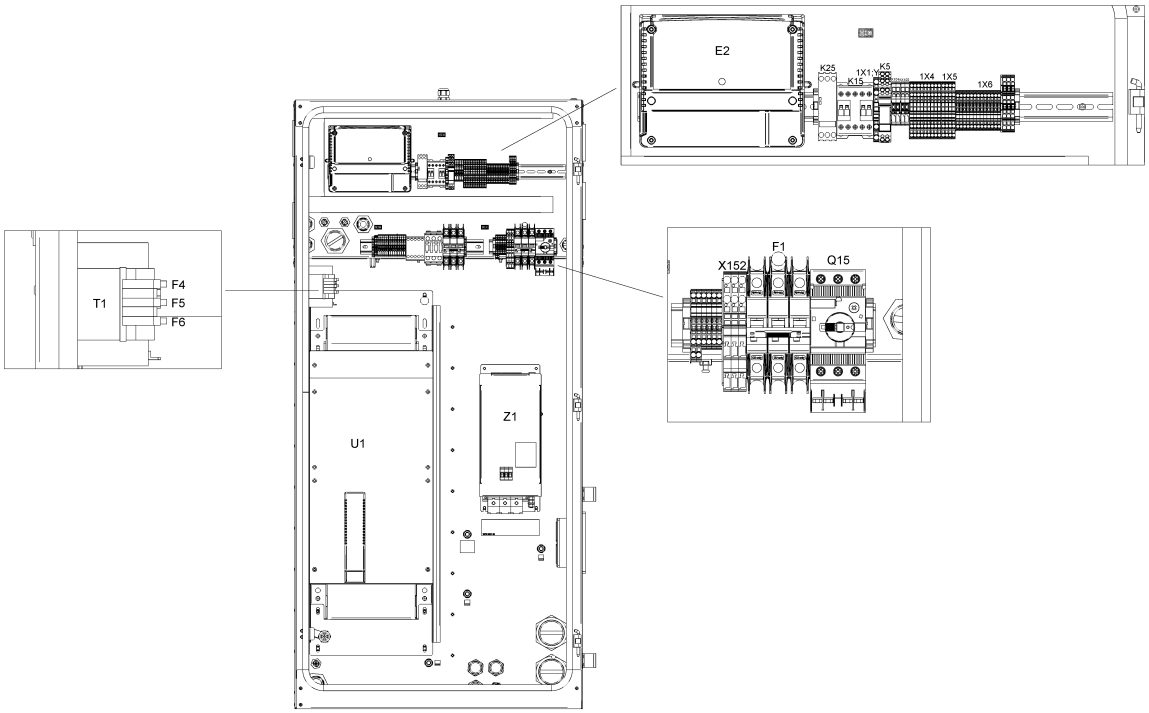
E2
K25
K15
1X1
K5
1X4
1X5
1X6
T1
F4
F5
F6
X152
F1
Q15
U1
Z1

21.27 - Cubicle components GA 110 VSD+ - (200V-400V-500V/50Hz, 460V/60Hz - IEC, 230V-460V-575V/60Hz - UL-cUL) - Full-Feature (12/12/2018 - 04/02/2020)

(((MOVOL:200V , MOVOL:400V , MOVOL:500V) + FREQ:50HZ , FREQ:60HZ + MOVOL:460V) + CAPPRE:IEC , (MOVOL:230V , MOVOL:460V , MOVOL:575V) + CAPPRE:ULCUL + FREQ:60HZ) + IDRY:Y + MODEL:GA110VP_16

Ref	Part Number	Qty	Name	Validity	EL
	1088 0039 35	1	PLATE	**(12/12/2018 - 24/02/2019)** ((((CAPPRM:AS1210 , CAPPRM:CE , CAPPRM:MHLW , CAPPRM:MOM) + MOVOL:400V , (CAPPRM:CE + MOVOL:500V , CAPPRM:MHLW + MOVOL:200V) + COOL:AIR) + FREQ:50HZ , (CAPPRM:ASME , CAPPRM:MHLW) + FREQ:60HZ + MOVOL:460V) + CAPPRE:IEC , ((MOVOL:230V , MOVOL:575V) + COOL:AIR , MOVOL:460V) + CAPPRE:ULCUL + CAPPRM:ASME + FREQ:60HZ) **(25/02/2019 - 04/02/2020)** ((((CAPPRM:AS1210 , CAPPRM:CE , CAPPRM:MHLW , CAPPRM:MOM) + MOVOL:400V , CAPPRM:CE + MOVOL:500V , CAPPRM:MHLW + MOVOL:200V) + FREQ:50HZ , (CAPPRM:ASME , CAPPRM:MHLW) + FREQ:60HZ + MOVOL:460V) + CAPPRE:IEC , (MOVOL:230V , MOVOL:460V , MOVOL:575V) + CAPPRE:ULCUL + CAPPRM:ASME + FREQ:60HZ) + COOL:AIR **(05/02/2020 - 30/12/2027)** (CAPPRE:IEC + CAPPRM:MHLW + FREQ:50HZ + MOVOL:200V , CAPPRE:ULCUL + CAPPRM:ASME + FREQ:60HZ + MOVOL:230V) + COOL:AIR	1X6
	1088 0040 37	1	END PLATE	**(12/12/2018 - 24/02/2019)** ((((CAPPRM:AS1210 , CAPPRM:CE , CAPPRM:MHLW , CAPPRM:MOM) + MOVOL:400V , (CAPPRM:CE + MOVOL:500V , CAPPRM:MHLW + MOVOL:200V) + COOL:AIR) + FREQ:50HZ , (CAPPRM:ASME , CAPPRM:MHLW) + FREQ:60HZ + MOVOL:460V) + CAPPRE:IEC , ((MOVOL:230V , MOVOL:575V) + COOL:AIR , MOVOL:460V) + CAPPRE:ULCUL + CAPPRM:ASME + FREQ:60HZ) **(25/02/2019 - 04/02/2020)** ((((CAPPRM:AS1210 , CAPPRM:CE , CAPPRM:MHLW , CAPPRM:MOM) + MOVOL:400V , CAPPRM:CE + MOVOL:500V , CAPPRM:MHLW + MOVOL:200V) + FREQ:50HZ , (CAPPRM:ASME , CAPPRM:MHLW) + FREQ:60HZ + MOVOL:460V) + CAPPRE:IEC , (MOVOL:230V , MOVOL:460V , MOVOL:575V) + CAPPRE:ULCUL + CAPPRM:ASME + FREQ:60HZ) + COOL:AIR **(05/02/2020 - 30/12/2027)** (CAPPRE:IEC + CAPPRM:MHLW + FREQ:50HZ + MOVOL:200V , CAPPRE:ULCUL + CAPPRM:ASME + FREQ:60HZ + MOVOL:230V) + COOL:AIR	1X7
	1088 0039 36	9	TERMINAL	**(12/12/2018 - 24/02/2019)** ((((CAPPRM:AS1210 , CAPPRM:CE , CAPPRM:MHLW , CAPPRM:MOM) + MOVOL:400V , (CAPPRM:CE + MOVOL:500V , CAPPRM:MHLW + MOVOL:200V) + COOL:AIR) + FREQ:50HZ , (CAPPRM:ASME , CAPPRM:MHLW) + FREQ:60HZ + MOVOL:460V) + CAPPRE:IEC , ((MOVOL:230V , MOVOL:575V) + COOL:AIR , MOVOL:460V) + CAPPRE:ULCUL + CAPPRM:ASME + FREQ:60HZ) **(25/02/2019 - 04/02/2020)** ((((CAPPRM:AS1210 , CAPPRM:CE , CAPPRM:MHLW , CAPPRM:MOM) + MOVOL:400V , CAPPRM:CE + MOVOL:500V , CAPPRM:MHLW + MOVOL:200V) + FREQ:50HZ , (CAPPRM:ASME , CAPPRM:MHLW) + FREQ:60HZ + MOVOL:460V) + CAPPRE:IEC , (MOVOL:230V , MOVOL:460V , MOVOL:575V) + CAPPRE:ULCUL + CAPPRM:ASME + FREQ:60HZ) + COOL:AIR **(05/02/2020 - 30/12/2027)** (CAPPRE:IEC + CAPPRM:MHLW + FREQ:50HZ + MOVOL:200V , CAPPRE:ULCUL + CAPPRM:ASME + FREQ:60HZ + MOVOL:230V) + COOL:AIR	1X4

Legend:

CAPPRE:IEC - Component approval electrical:IEC
CAPPRE:ULCUL - Component approval electrical:UL/cUL
CAPPRM:AS1210 - Component approval mechanical:AS1210
CAPPRM:ASME - Component approval mechanical:ASME
CAPPRM:CE - Component approval mechanical:CE
CAPPRM:MHLW - Component approval mechanical:MHLW
CAPPRM:MOM - Component approval mechanical:MOM
COOL:AIR - Cooling:Air cooled
FREQ:50HZ - Frequency:50 Hz
FREQ:60HZ - Frequency:60 Hz
IDRY:Y - Integrated dryer:Yes
MODEL:GA110VP_16 - Model:GA 110VSD+
MOVOL:200V - Supply voltage:200 V
MOVOL:230V - Supply voltage:230 V
MOVOL:400V - Supply voltage:400 V
MOVOL:460V - Supply voltage:460 V
MOVOL:500V - Supply voltage:500 V
MOVOL:575V - Supply voltage:575 V

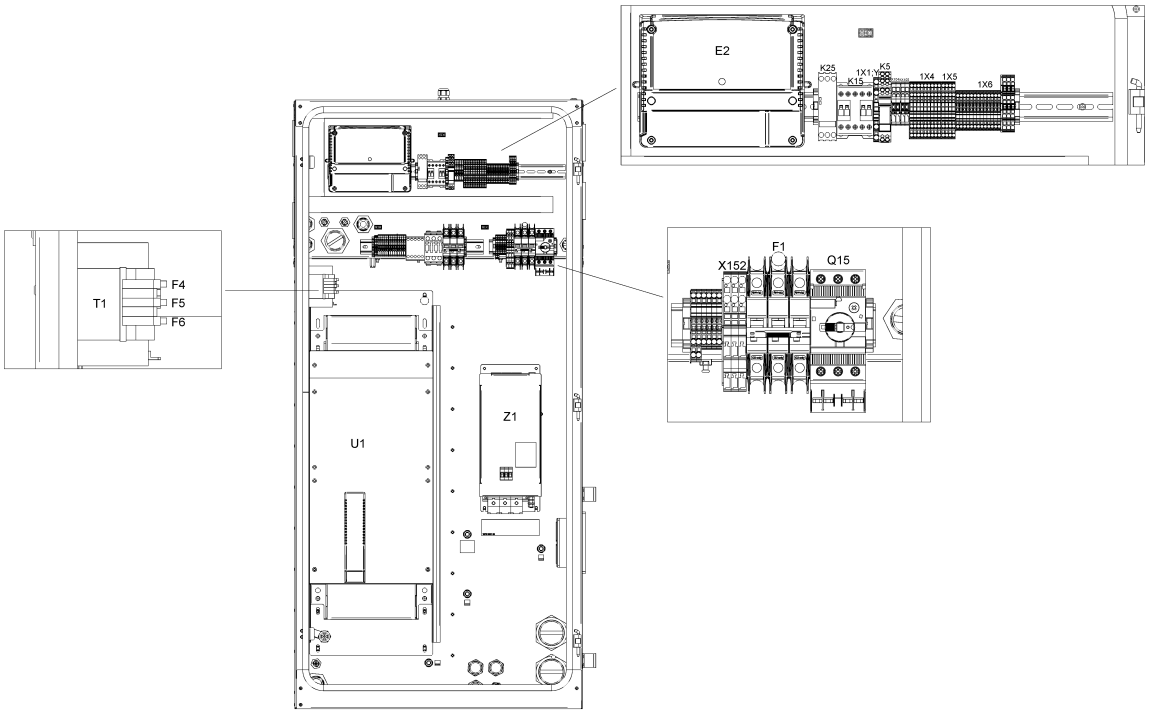
E2
K25
K15
1X1
K5
1X4
1X5
1X6
T1
F4
F5
F6
X152
F1
Q15
U1
Z1

21.27 - Cubicle components GA 110 VSD+ - (200V-400V-500V/50Hz, 460V/60Hz - IEC, 230V-460V-575V/60Hz - UL-cUL) - Full-Feature (12/12/2018 - 04/02/2020)

(((MOVOL:200V , MOVOL:400V , MOVOL:500V) + FREQ:50HZ , FREQ:60HZ + MOVOL:460V) + CAPPRE:IEC , (MOVOL:230V , MOVOL:460V , MOVOL:575V) + CAPPRE:ULCUL + FREQ:60HZ) + IDRY:Y + MODEL:GA110VP_16

Ref	Part Number	Qty	Name	Validity	EL
	1088 0039 36	4	TERMINAL	**(12/12/2018 - 24/02/2019)** ((((CAPPRM:AS1210 , CAPPRM:CE , CAPPRM:MHLW , CAPPRM:MOM) + MOVOL:400V , (CAPPRM:CE + MOVOL:500V , CAPPRM:MHLW + MOVOL:200V) + COOL:AIR) + FREQ:50HZ , (CAPPRM:ASME , CAPPRM:MHLW) + FREQ:60HZ + MOVOL:460V) + CAPPRE:IEC , ((MOVOL:230V , MOVOL:575V) + COOL:AIR , MOVOL:460V) + CAPPRE:ULCUL + CAPPRM:ASME + FREQ:60HZ) **(25/02/2019 - 04/02/2020)** ((((CAPPRM:AS1210 , CAPPRM:CE , CAPPRM:MHLW , CAPPRM:MOM) + MOVOL:400V , CAPPRM:CE + MOVOL:500V , CAPPRM:MHLW + MOVOL:200V) + FREQ:50HZ , (CAPPRM:ASME , CAPPRM:MHLW) + FREQ:60HZ + MOVOL:460V) + CAPPRE:IEC , (MOVOL:230V , MOVOL:460V , MOVOL:575V) + CAPPRE:ULCUL + CAPPRM:ASME + FREQ:60HZ) + COOL:AIR **(05/02/2020 - 30/12/2027)** (CAPPRE:IEC + CAPPRM:MHLW + FREQ:50HZ + MOVOL:200V , CAPPRE:ULCUL + CAPPRM:ASME + FREQ:60HZ + MOVOL:230V) + COOL:AIR	1X6
	1088 0039 37	1	END PLATE	**(12/12/2018 - 24/02/2019)** ((((CAPPRM:AS1210 , CAPPRM:CE , CAPPRM:MHLW , CAPPRM:MOM) + MOVOL:400V , (CAPPRM:CE + MOVOL:500V , CAPPRM:MHLW + MOVOL:200V) + COOL:AIR) + FREQ:50HZ , (CAPPRM:ASME , CAPPRM:MHLW) + FREQ:60HZ + MOVOL:460V) + CAPPRE:IEC , ((MOVOL:230V , MOVOL:575V) + COOL:AIR , MOVOL:460V) + CAPPRE:ULCUL + CAPPRM:ASME + FREQ:60HZ) **(25/02/2019 - 04/02/2020)** ((((CAPPRM:AS1210 , CAPPRM:CE , CAPPRM:MHLW , CAPPRM:MOM) + MOVOL:400V , CAPPRM:CE + MOVOL:500V , CAPPRM:MHLW + MOVOL:200V) + FREQ:50HZ , (CAPPRM:ASME , CAPPRM:MHLW) + FREQ:60HZ + MOVOL:460V) + CAPPRE:IEC , (MOVOL:230V , MOVOL:460V , MOVOL:575V) + CAPPRE:ULCUL + CAPPRM:ASME + FREQ:60HZ) + COOL:AIR **(05/02/2020 - 30/12/2027)** (CAPPRE:IEC + CAPPRM:MHLW + FREQ:50HZ + MOVOL:200V , CAPPRE:ULCUL + CAPPRM:ASME + FREQ:60HZ + MOVOL:230V) + COOL:AIR	1X4
	1088 0039 37	1	END PLATE	**(12/12/2018 - 24/02/2019)** ((((CAPPRM:AS1210 , CAPPRM:CE , CAPPRM:MHLW , CAPPRM:MOM) + MOVOL:400V , (CAPPRM:CE + MOVOL:500V , CAPPRM:MHLW + MOVOL:200V) + COOL:AIR) + FREQ:50HZ , (CAPPRM:ASME , CAPPRM:MHLW) + FREQ:60HZ + MOVOL:460V) + CAPPRE:IEC , ((MOVOL:230V , MOVOL:575V) + COOL:AIR , MOVOL:460V) + CAPPRE:ULCUL + CAPPRM:ASME + FREQ:60HZ) **(25/02/2019 - 04/02/2020)** ((((CAPPRM:AS1210 , CAPPRM:CE , CAPPRM:MHLW , CAPPRM:MOM) + MOVOL:400V , CAPPRM:CE + MOVOL:500V , CAPPRM:MHLW + MOVOL:200V) + FREQ:50HZ , (CAPPRM:ASME , CAPPRM:MHLW) + FREQ:60HZ + MOVOL:460V) + CAPPRE:IEC , (MOVOL:230V , MOVOL:460V , MOVOL:575V) + CAPPRE:ULCUL + CAPPRM:ASME + FREQ:60HZ) + COOL:AIR **(05/02/2020 - 30/12/2027)** (CAPPRE:IEC + CAPPRM:MHLW + FREQ:50HZ + MOVOL:200V , CAPPRE:ULCUL + CAPPRM:ASME + FREQ:60HZ + MOVOL:230V) + COOL:AIR	1X6

Legend:

CAPPRE:IEC - Component approval electrical:IEC
CAPPRE:ULCUL - Component approval electrical:UL/cUL
CAPPRM:AS1210 - Component approval mechanical:AS1210
CAPPRM:ASME - Component approval mechanical:ASME
CAPPRM:CE - Component approval mechanical:CE
CAPPRM:MHLW - Component approval mechanical:MHLW
CAPPRM:MOM - Component approval mechanical:MOM
COOL:AIR - Cooling:Air cooled
FREQ:50HZ - Frequency:50 Hz
FREQ:60HZ - Frequency:60 Hz
IDRY:Y - Integrated dryer:Yes
MODEL:GA110VP_16 - Model:GA 110VSD+
MOVOL:200V - Supply voltage:200 V
MOVOL:230V - Supply voltage:230 V
MOVOL:400V - Supply voltage:400 V
MOVOL:460V - Supply voltage:460 V
MOVOL:500V - Supply voltage:500 V
MOVOL:575V - Supply voltage:575 V

21.27 - Cubicle components GA 110 VSD+ - (200V-400V-500V/50Hz, 460V/60Hz - IEC, 230V-460V-575V/60Hz - UL-cUL) - Full-Feature (12/12/2018 - 04/02/2020)

(((MOVOL:200V , MOVOL:400V , MOVOL:500V) + FREQ:50HZ , FREQ:60HZ + MOVOL:460V) + CAPPRE:IEC , (MOVOL:230V , MOVOL:460V , MOVOL:575V) + CAPPRE:ULCUL + FREQ:60HZ) + IDRY:Y + MODEL:GA110VP_16

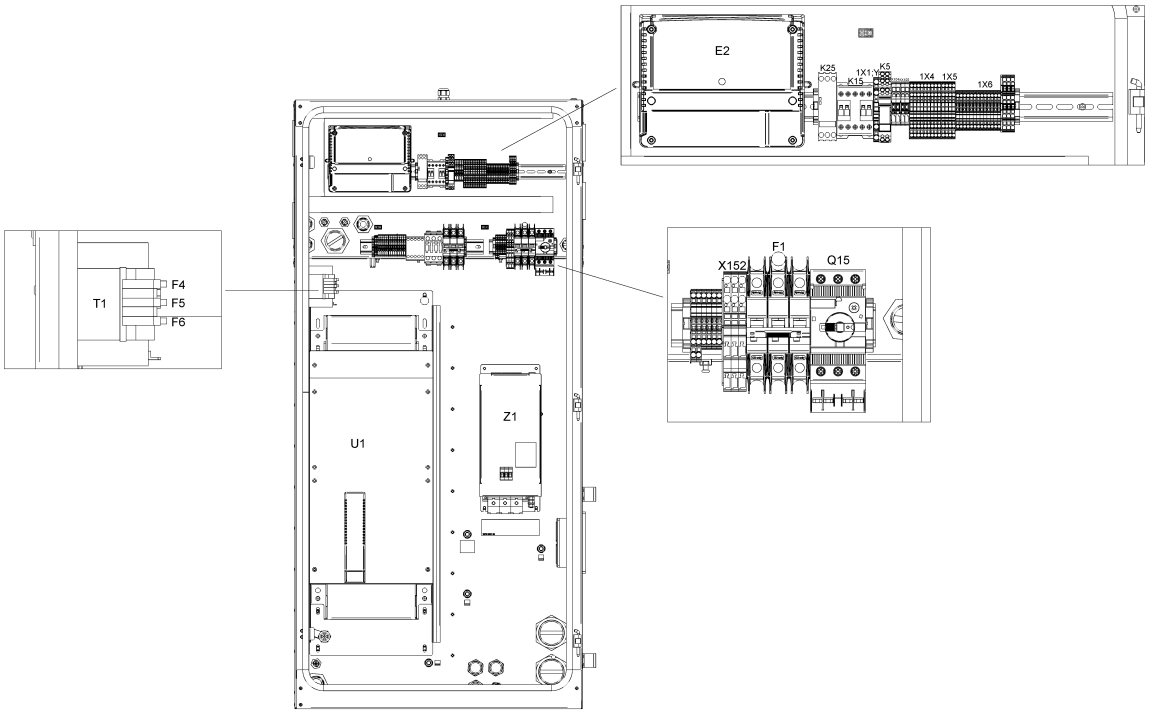

21.27 - Cubicle components GA 110 VSD+ - (200V-400V-500V/50Hz, 460V/60Hz - IEC, 230V-460V-575V/60Hz - UL-cUL) - Full-Feature (12/12/2018 - 04/02/2020)

(((MOVOL:200V , MOVOL:400V , MOVOL:500V) + FREQ:50HZ , FREQ:60HZ + MOVOL:460V) + CAPPRE:IEC , (MOVOL:230V , MOVOL:460V , MOVOL:575V) + CAPPRE:ULCUL + FREQ:60HZ) + IDRY:Y + MODEL:GA110VP_16

Ref	Part Number	Qty	Name	Validity	EL
	1088 0039 37	1	END PLATE	**(12/12/2018 - 24/02/2019)** ((((CAPPRM:AS1210 , CAPPRM:CE , CAPPRM:MHLW , CAPPRM:MOM) + MOVOL:400V , (CAPPRM:CE + MOVOL:500V , CAPPRM:MHLW + MOVOL:200V) + COOL:AIR) + FREQ:50HZ , (CAPPRM:ASME , CAPPRM:MHLW) + FREQ:60HZ + MOVOL:460V) + CAPPRE:IEC , ((MOVOL:230V , MOVOL:575V) + COOL:AIR , MOVOL:460V) + CAPPRE:ULCUL + CAPPRM:ASME + FREQ:60HZ) **(25/02/2019 - 04/02/2020)** ((((CAPPRM:AS1210 , CAPPRM:CE , CAPPRM:MHLW , CAPPRM:MOM) + MOVOL:400V , CAPPRM:CE + MOVOL:500V , CAPPRM:MHLW + MOVOL:200V) + FREQ:50HZ , (CAPPRM:ASME , CAPPRM:MHLW) + FREQ:60HZ + MOVOL:460V) + CAPPRE:IEC , (MOVOL:230V , MOVOL:460V , MOVOL:575V) + CAPPRE:ULCUL + CAPPRM:ASME + FREQ:60HZ) + COOL:AIR **(05/02/2020 - 30/12/2027)** (CAPPRE:IEC + CAPPRM:MHLW + FREQ:50HZ + MOVOL:200V , CAPPRE:ULCUL + CAPPRM:ASME + FREQ:60HZ + MOVOL:230V) + COOL:AIR	1X1:Y/D
	1088 0037 81	1	CONNECTOR	**(12/12/2018 - 24/02/2019)** ((((CAPPRM:AS1210 , CAPPRM:CE , CAPPRM:MHLW , CAPPRM:MOM) + MOVOL:400V , (CAPPRM:CE + MOVOL:500V , CAPPRM:MHLW + MOVOL:200V) + COOL:AIR) + FREQ:50HZ , (CAPPRM:ASME , CAPPRM:MHLW) + FREQ:60HZ + MOVOL:460V) + CAPPRE:IEC , ((MOVOL:230V , MOVOL:575V) + COOL:AIR , MOVOL:460V) + CAPPRE:ULCUL + CAPPRM:ASME + FREQ:60HZ) **(25/02/2019 - 04/02/2020)** ((((CAPPRM:AS1210 , CAPPRM:CE , CAPPRM:MHLW , CAPPRM:MOM) + MOVOL:400V , CAPPRM:CE + MOVOL:500V , CAPPRM:MHLW + MOVOL:200V) + FREQ:50HZ , (CAPPRM:ASME , CAPPRM:MHLW) + FREQ:60HZ + MOVOL:460V) + CAPPRE:IEC , (MOVOL:230V , MOVOL:460V , MOVOL:575V) + CAPPRE:ULCUL + CAPPRM:ASME + FREQ:60HZ) + COOL:AIR **(05/02/2020 - 30/12/2027)** (CAPPRE:IEC + CAPPRM:MHLW + FREQ:50HZ + MOVOL:200V , CAPPRE:ULCUL + CAPPRM:ASME + FREQ:60HZ + MOVOL:230V) + COOL:AIR	2X27
	1088 0037 80	1	CONNECTOR	**(12/12/2018 - 24/02/2019)** ((((CAPPRM:AS1210 , CAPPRM:CE , CAPPRM:MHLW , CAPPRM:MOM) + MOVOL:400V , (CAPPRM:CE + MOVOL:500V , CAPPRM:MHLW + MOVOL:200V) + COOL:AIR) + FREQ:50HZ , (CAPPRM:ASME , CAPPRM:MHLW) + FREQ:60HZ + MOVOL:460V) + CAPPRE:IEC , ((MOVOL:230V , MOVOL:575V) + COOL:AIR , MOVOL:460V) + CAPPRE:ULCUL + CAPPRM:ASME + FREQ:60HZ) **(25/02/2019 - 04/02/2020)** ((((CAPPRM:AS1210 , CAPPRM:CE , CAPPRM:MHLW , CAPPRM:MOM) + MOVOL:400V , CAPPRM:CE + MOVOL:500V , CAPPRM:MHLW + MOVOL:200V) + FREQ:50HZ , (CAPPRM:ASME , CAPPRM:MHLW) + FREQ:60HZ + MOVOL:460V) + CAPPRE:IEC , (MOVOL:230V , MOVOL:460V , MOVOL:575V) + CAPPRE:ULCUL + CAPPRM:ASME + FREQ:60HZ) + COOL:AIR **(05/02/2020 - 30/12/2027)** (CAPPRE:IEC + CAPPRM:MHLW + FREQ:50HZ + MOVOL:200V , CAPPRE:ULCUL + CAPPRM:ASME + FREQ:60HZ + MOVOL:230V) + COOL:AIR	2X28

Legend:

CAPPRE:IEC - Component approval electrical:IEC
CAPPRE:ULCUL - Component approval electrical:UL/cUL
CAPPRM:AS1210 - Component approval mechanical:AS1210
CAPPRM:ASME - Component approval mechanical:ASME
CAPPRM:CE - Component approval mechanical:CE
CAPPRM:MHLW - Component approval mechanical:MHLW
CAPPRM:MOM - Component approval mechanical:MOM
COOL:AIR - Cooling:Air cooled
FREQ:50HZ - Frequency:50 Hz
FREQ:60HZ - Frequency:60 Hz
IDRY:Y - Integrated dryer:Yes
MODEL:GA110VP_16 - Model:GA 110VSD+
MOVOL:200V - Supply voltage:200 V
MOVOL:230V - Supply voltage:230 V
MOVOL:400V - Supply voltage:400 V
MOVOL:460V - Supply voltage:460 V
MOVOL:500V - Supply voltage:500 V
MOVOL:575V - Supply voltage:575 V

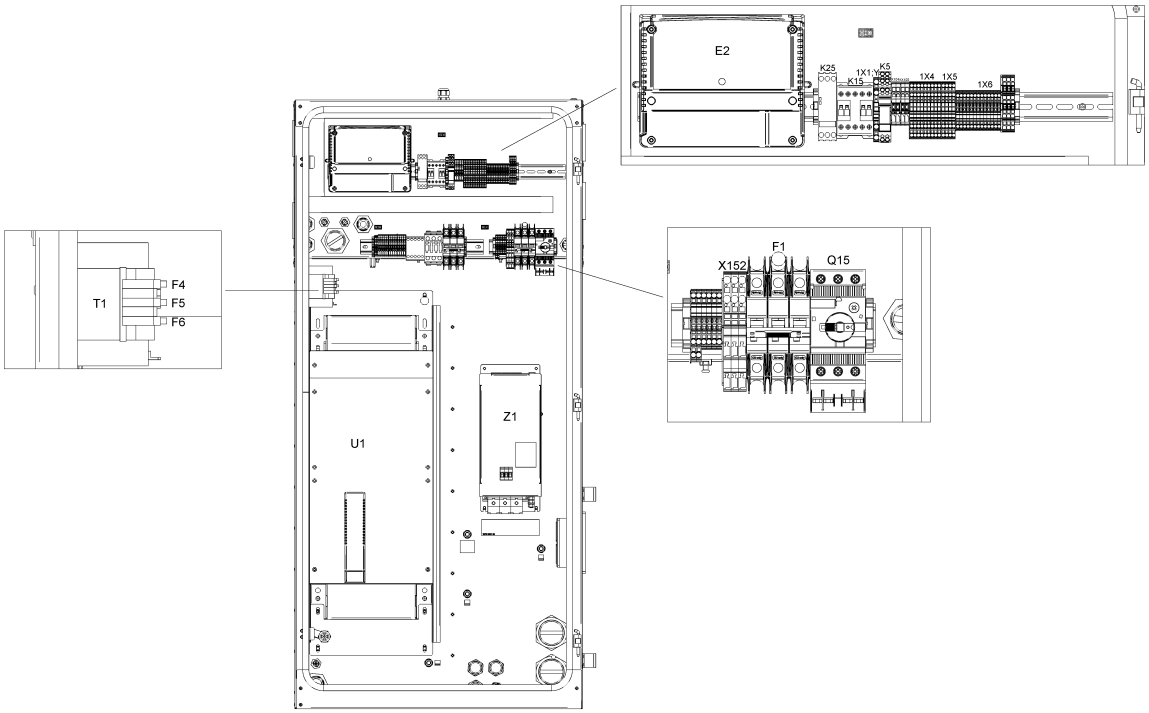
E2
K25
K15
1X1
K5
1X4
1X5
1X6
T1
F4
F5
F6
X152
F1
Q15
U1
Z1

21.27 - Cubicle components GA 110 VSD+ - (200V-400V-500V/50Hz, 460V/60Hz - IEC, 230V-460V-575V/60Hz - UL-cUL) - Full-Feature (12/12/2018 - 04/02/2020)

(((MOVOL:200V , MOVOL:400V , MOVOL:500V) + FREQ:50HZ , FREQ:60HZ + MOVOL:460V) + CAPPRE:IEC , (MOVOL:230V , MOVOL:460V , MOVOL:575V) + CAPPRE:ULCUL + FREQ:60HZ) + IDRY:Y + MODEL:GA110VP_16

Ref	Part Number	Qty	Name	Validity	EL
	1088 0031 32	1	CONNECTOR	**(12/12/2018 - 24/02/2019)** ((((CAPPRM:AS1210 , CAPPRM:CE , CAPPRM:MHLW , CAPPRM:MOM) + MOVOL:400V , (CAPPRM:CE + MOVOL:500V , CAPPRM:MHLW + MOVOL:200V) + COOL:AIR) + FREQ:50HZ , (CAPPRM:ASME , CAPPRM:MHLW) + FREQ:60HZ + MOVOL:460V) + CAPPRE:IEC , ((MOVOL:230V , MOVOL:575V) + COOL:AIR , MOVOL:460V) + CAPPRE:ULCUL + CAPPRM:ASME + FREQ:60HZ) **(25/02/2019 - 04/02/2020)** ((((CAPPRM:AS1210 , CAPPRM:CE , CAPPRM:MHLW , CAPPRM:MOM) + MOVOL:400V , CAPPRM:CE + MOVOL:500V , CAPPRM:MHLW + MOVOL:200V) + FREQ:50HZ , (CAPPRM:ASME , CAPPRM:MHLW) + FREQ:60HZ + MOVOL:460V) + CAPPRE:IEC , (MOVOL:230V , MOVOL:460V , MOVOL:575V) + CAPPRE:ULCUL + CAPPRM:ASME + FREQ:60HZ) + COOL:AIR **(05/02/2020 - 30/12/2027)** (CAPPRE:IEC + CAPPRM:MHLW + FREQ:50HZ + MOVOL:200V , CAPPRE:ULCUL + CAPPRM:ASME + FREQ:60HZ + MOVOL:230V) + COOL:AIR	2X30
	1088 0031 26	1	CONNECTOR 6-POLE	**(12/12/2018 - 24/02/2019)** ((((CAPPRM:AS1210 , CAPPRM:CE , CAPPRM:MHLW , CAPPRM:MOM) + MOVOL:400V , (CAPPRM:CE + MOVOL:500V , CAPPRM:MHLW + MOVOL:200V) + COOL:AIR) + FREQ:50HZ , (CAPPRM:ASME , CAPPRM:MHLW) + FREQ:60HZ + MOVOL:460V) + CAPPRE:IEC , ((MOVOL:230V , MOVOL:575V) + COOL:AIR , MOVOL:460V) + CAPPRE:ULCUL + CAPPRM:ASME + FREQ:60HZ) **(25/02/2019 - 04/02/2020)** ((((CAPPRM:AS1210 , CAPPRM:CE , CAPPRM:MHLW , CAPPRM:MOM) + MOVOL:400V , CAPPRM:CE + MOVOL:500V , CAPPRM:MHLW + MOVOL:200V) + FREQ:50HZ , (CAPPRM:ASME , CAPPRM:MHLW) + FREQ:60HZ + MOVOL:460V) + CAPPRE:IEC , (MOVOL:230V , MOVOL:460V , MOVOL:575V) + CAPPRE:ULCUL + CAPPRM:ASME + FREQ:60HZ) + COOL:AIR **(05/02/2020 - 30/12/2027)** (CAPPRE:IEC + CAPPRM:MHLW + FREQ:50HZ + MOVOL:200V , CAPPRE:ULCUL + CAPPRM:ASME + FREQ:60HZ + MOVOL:230V) + COOL:AIR	2X31
	~~1089 9664 06~~	1	SWITCH	**(12/12/2018 - 24/02/2019)** ((((CAPPRM:AS1210 , CAPPRM:CE , CAPPRM:MHLW , CAPPRM:MOM) + MOVOL:400V , (CAPPRM:CE + MOVOL:500V , CAPPRM:MHLW + MOVOL:200V) + COOL:AIR) + FREQ:50HZ , (CAPPRM:ASME , CAPPRM:MHLW) + FREQ:60HZ + MOVOL:460V) + CAPPRE:IEC , ((MOVOL:230V , MOVOL:575V) + COOL:AIR , MOVOL:460V) + CAPPRE:ULCUL + CAPPRM:ASME + FREQ:60HZ) **(25/02/2019 - 04/02/2020)** ((((CAPPRM:AS1210 , CAPPRM:CE , CAPPRM:MHLW , CAPPRM:MOM) + MOVOL:400V , CAPPRM:CE + MOVOL:500V , CAPPRM:MHLW + MOVOL:200V) + FREQ:50HZ , (CAPPRM:ASME , CAPPRM:MHLW) + FREQ:60HZ + MOVOL:460V) + CAPPRE:IEC , (MOVOL:230V , MOVOL:460V , MOVOL:575V) + CAPPRE:ULCUL + CAPPRM:ASME + FREQ:60HZ) + COOL:AIR **(05/02/2020 - 30/12/2027)** (CAPPRE:IEC + CAPPRM:MHLW + FREQ:50HZ + MOVOL:200V , CAPPRE:ULCUL + CAPPRM:ASME + FREQ:60HZ + MOVOL:230V) + COOL:AIR	Q15
	Substituted by:		1089 9551 97 - AUX.CONTACT CIRCUIT BREAKER (quantity: 1)		

Legend:

CAPPRE:IEC - Component approval electrical:IEC
CAPPRE:ULCUL - Component approval electrical:UL/cUL
CAPPRM:AS1210 - Component approval mechanical:AS1210
CAPPRM:ASME - Component approval mechanical:ASME
CAPPRM:CE - Component approval mechanical:CE
CAPPRM:MHLW - Component approval mechanical:MHLW
CAPPRM:MOM - Component approval mechanical:MOM
COOL:AIR - Cooling:Air cooled
FREQ:50HZ - Frequency:50 Hz
FREQ:60HZ - Frequency:60 Hz
IDRY:Y - Integrated dryer:Yes
MODEL:GA110VP_16 - Model:GA 110VSD+
MOVOL:200V - Supply voltage:200 V
MOVOL:230V - Supply voltage:230 V
MOVOL:400V - Supply voltage:400 V
MOVOL:460V - Supply voltage:460 V
MOVOL:500V - Supply voltage:500 V
MOVOL:575V - Supply voltage:575 V

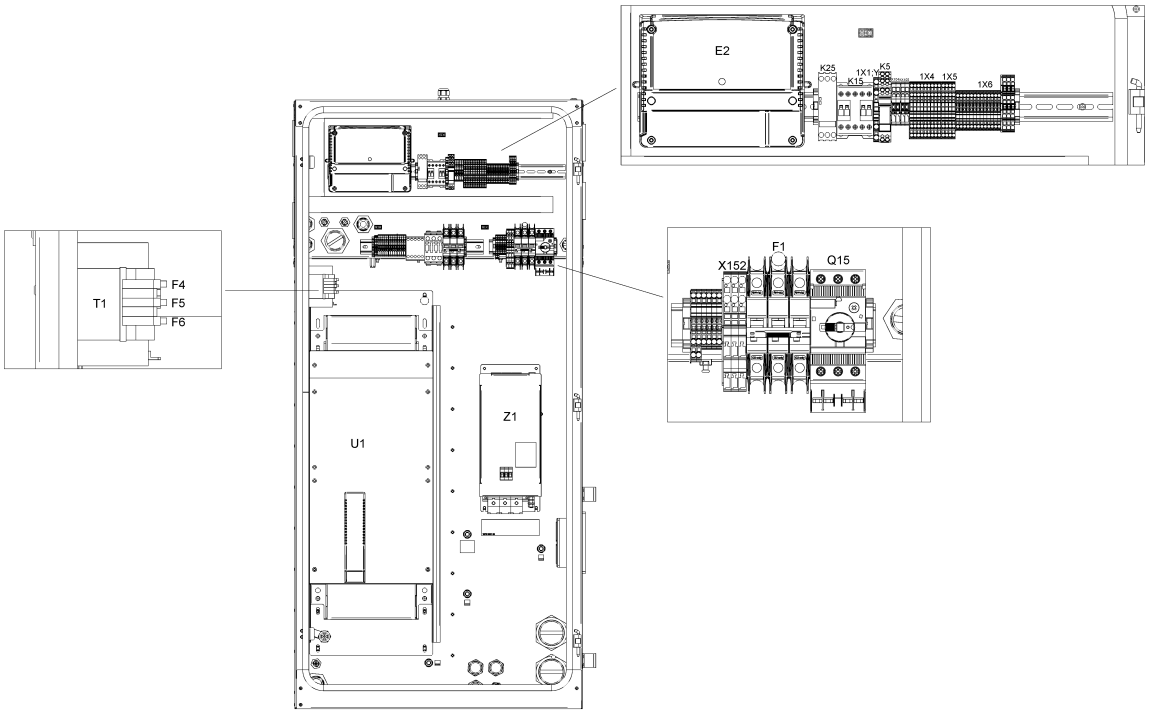
E2
K25
K15
1X1
K5
1X4
1X5
1X6
T1
F4
F5
F6
X152
F1
Q15
U1
Z1

21.27 - Cubicle components GA 110 VSD+ - (200V-400V-500V/50Hz, 460V/60Hz - IEC, 230V-460V-575V/60Hz - UL-cUL) - Full-Feature (12/12/2018 - 04/02/2020)

(((MOVOL:200V , MOVOL:400V , MOVOL:500V) + FREQ:50HZ , FREQ:60HZ + MOVOL:460V) + CAPPRE:IEC , (MOVOL:230V , MOVOL:460V , MOVOL:575V) + CAPPRE:ULCUL + FREQ:60HZ) + IDRY:Y + MODEL:GA110VP_16

Ref	Part Number	Qty	Name	Validity	EL
	1089 9551 19	1	CIRCUIT BREAKER	**(12/12/2018 - 24/02/2019)** ((((CAPPRM:AS1210 , CAPPRM:CE , CAPPRM:MHLW , CAPPRM:MOM) + MOVOL:400V , (CAPPRM:CE + MOVOL:500V , CAPPRM:MHLW + MOVOL:200V) + COOL:AIR) + FREQ:50HZ , (CAPPRM:ASME , CAPPRM:MHLW) + FREQ:60HZ + MOVOL:460V) + CAPPRE:IEC , ((MOVOL:230V , MOVOL:575V) + COOL:AIR , MOVOL:460V) + CAPPRE:ULCUL + CAPPRM:ASME + FREQ:60HZ) **(25/02/2019 - 04/02/2020)** ((((CAPPRM:AS1210 , CAPPRM:CE , CAPPRM:MHLW , CAPPRM:MOM) + MOVOL:400V , CAPPRM:CE + MOVOL:500V , CAPPRM:MHLW + MOVOL:200V) + FREQ:50HZ , (CAPPRM:ASME , CAPPRM:MHLW) + FREQ:60HZ + MOVOL:460V) + CAPPRE:IEC , (MOVOL:230V , MOVOL:460V , MOVOL:575V) + CAPPRE:ULCUL + CAPPRM:ASME + FREQ:60HZ) + COOL:AIR **(05/02/2020 - 30/12/2027)** (CAPPRE:IEC + CAPPRM:MHLW + FREQ:50HZ + MOVOL:200V , CAPPRE:ULCUL + CAPPRM:ASME + FREQ:60HZ + MOVOL:230V) + COOL:AIR	Q15
	1088 0038 26	1	TERMINAL	**(12/12/2018 - 24/02/2019)** ((((CAPPRM:AS1210 , CAPPRM:CE , CAPPRM:MHLW , CAPPRM:MOM) + MOVOL:400V , (CAPPRM:CE + MOVOL:500V , CAPPRM:MHLW + MOVOL:200V) + COOL:AIR) + FREQ:50HZ , (CAPPRM:ASME , CAPPRM:MHLW) + FREQ:60HZ + MOVOL:460V) + CAPPRE:IEC , ((MOVOL:230V , MOVOL:575V) + COOL:AIR , MOVOL:460V) + CAPPRE:ULCUL + CAPPRM:ASME + FREQ:60HZ) **(25/02/2019 - 04/02/2020)** ((((CAPPRM:AS1210 , CAPPRM:CE , CAPPRM:MHLW , CAPPRM:MOM) + MOVOL:400V , CAPPRM:CE + MOVOL:500V , CAPPRM:MHLW + MOVOL:200V) + FREQ:50HZ , (CAPPRM:ASME , CAPPRM:MHLW) + FREQ:60HZ + MOVOL:460V) + CAPPRE:IEC , (MOVOL:230V , MOVOL:460V , MOVOL:575V) + CAPPRE:ULCUL + CAPPRM:ASME + FREQ:60HZ) + COOL:AIR **(05/02/2020 - 30/12/2027)** (CAPPRE:IEC + CAPPRM:MHLW + FREQ:50HZ + MOVOL:200V , CAPPRE:ULCUL + CAPPRM:ASME + FREQ:60HZ + MOVOL:230V) + COOL:AIR	1X1:Y/D
	1089 9602 79	1	CONTACTOR 110 V	**(12/12/2018 - 24/02/2019)** ((((CAPPRM:AS1210 , CAPPRM:CE , CAPPRM:MHLW , CAPPRM:MOM) + MOVOL:400V , (CAPPRM:CE + MOVOL:500V , CAPPRM:MHLW + MOVOL:200V) + COOL:AIR) + FREQ:50HZ , (CAPPRM:ASME , CAPPRM:MHLW) + FREQ:60HZ + MOVOL:460V) + CAPPRE:IEC , ((MOVOL:230V , MOVOL:575V) + COOL:AIR , MOVOL:460V) + CAPPRE:ULCUL + CAPPRM:ASME + FREQ:60HZ) **(25/02/2019 - 04/02/2020)** ((((CAPPRM:AS1210 , CAPPRM:CE , CAPPRM:MHLW , CAPPRM:MOM) + MOVOL:400V , CAPPRM:CE + MOVOL:500V , CAPPRM:MHLW + MOVOL:200V) + FREQ:50HZ , (CAPPRM:ASME , CAPPRM:MHLW) + FREQ:60HZ + MOVOL:460V) + CAPPRE:IEC , (MOVOL:230V , MOVOL:460V , MOVOL:575V) + CAPPRE:ULCUL + CAPPRM:ASME + FREQ:60HZ) + COOL:AIR **(05/02/2020 - 30/12/2027)** (CAPPRE:IEC + CAPPRM:MHLW + FREQ:50HZ + MOVOL:200V , CAPPRE:ULCUL + CAPPRM:ASME + FREQ:60HZ + MOVOL:230V) + COOL:AIR	K15

Legend:

CAPPRE:IEC - Component approval electrical:IEC
CAPPRE:ULCUL - Component approval electrical:UL/cUL
CAPPRM:AS1210 - Component approval mechanical:AS1210
CAPPRM:ASME - Component approval mechanical:ASME
CAPPRM:CE - Component approval mechanical:CE
CAPPRM:MHLW - Component approval mechanical:MHLW
CAPPRM:MOM - Component approval mechanical:MOM
COOL:AIR - Cooling:Air cooled
FREQ:50HZ - Frequency:50 Hz
FREQ:60HZ - Frequency:60 Hz
IDRY:Y - Integrated dryer:Yes
MODEL:GA110VP_16 - Model:GA 110VSD+
MOVOL:200V - Supply voltage:200 V
MOVOL:230V - Supply voltage:230 V
MOVOL:400V - Supply voltage:400 V
MOVOL:460V - Supply voltage:460 V
MOVOL:500V - Supply voltage:500 V
MOVOL:575V - Supply voltage:575 V

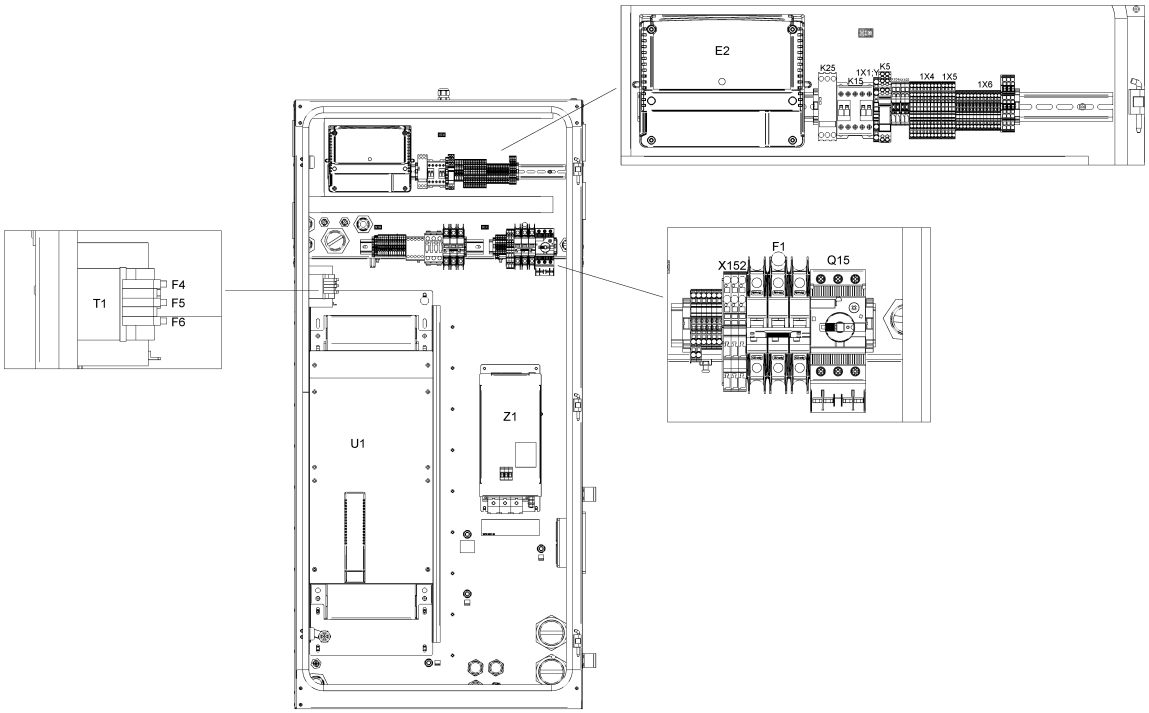
E2
K25
K15
1X1
K5
1X4
1X5
1X6
T1
F4
F5
F6
X152
F1
Q15
U1
Z1

21.27 - Cubicle components GA 110 VSD+ - (200V-400V-500V/50Hz, 460V/60Hz - IEC, 230V-460V-575V/60Hz - UL-cUL) - Full-Feature (12/12/2018 - 04/02/2020)

(((MOVOL:200V , MOVOL:400V , MOVOL:500V) + FREQ:50HZ , FREQ:60HZ + MOVOL:460V) + CAPPRE:IEC , (MOVOL:230V , MOVOL:460V , MOVOL:575V) + CAPPRE:ULCUL + FREQ:60HZ) + IDRY:Y + MODEL:GA110VP_16

Ref	Part Number	Qty	Name	Validity	EL
	1089 9461 26	1	PHASE SEQUENCE RELAY	**(12/12/2018 - 24/02/2019)** ((((CAPPRM:AS1210 , CAPPRM:CE , CAPPRM:MHLW , CAPPRM:MOM) + MOVOL:400V , (CAPPRM:CE + MOVOL:500V , CAPPRM:MHLW + MOVOL:200V) + COOL:AIR) + FREQ:50HZ , (CAPPRM:ASME , CAPPRM:MHLW) + FREQ:60HZ + MOVOL:460V) + CAPPRE:IEC , ((MOVOL:230V , MOVOL:575V) + COOL:AIR , MOVOL:460V) + CAPPRE:ULCUL + CAPPRM:ASME + FREQ:60HZ) **(25/02/2019 - 04/02/2020)** ((((CAPPRM:AS1210 , CAPPRM:CE , CAPPRM:MHLW , CAPPRM:MOM) + MOVOL:400V , CAPPRM:CE + MOVOL:500V , CAPPRM:MHLW + MOVOL:200V) + FREQ:50HZ , (CAPPRM:ASME , CAPPRM:MHLW) + FREQ:60HZ + MOVOL:460V) + CAPPRE:IEC , (MOVOL:230V , MOVOL:460V , MOVOL:575V) + CAPPRE:ULCUL + CAPPRM:ASME + FREQ:60HZ) + COOL:AIR **(05/02/2020 - 30/12/2027)** (CAPPRE:IEC + CAPPRM:MHLW + FREQ:50HZ + MOVOL:200V , CAPPRE:ULCUL + CAPPRM:ASME + FREQ:60HZ + MOVOL:230V) + COOL:AIR	K25
	1088 0032 17	1	RELAY 115 VAC	**(12/12/2018 - 24/02/2019)** ((((CAPPRM:AS1210 , CAPPRM:CE , CAPPRM:MHLW , CAPPRM:MOM) + MOVOL:400V , (CAPPRM:CE + MOVOL:500V , CAPPRM:MHLW + MOVOL:200V) + COOL:AIR) + FREQ:50HZ , (CAPPRM:ASME , CAPPRM:MHLW) + FREQ:60HZ + MOVOL:460V) + CAPPRE:IEC , ((MOVOL:230V , MOVOL:575V) + COOL:AIR , MOVOL:460V) + CAPPRE:ULCUL + CAPPRM:ASME + FREQ:60HZ) **(25/02/2019 - 04/02/2020)** ((((CAPPRM:AS1210 , CAPPRM:CE , CAPPRM:MHLW , CAPPRM:MOM) + MOVOL:400V , CAPPRM:CE + MOVOL:500V , CAPPRM:MHLW + MOVOL:200V) + FREQ:50HZ , (CAPPRM:ASME , CAPPRM:MHLW) + FREQ:60HZ + MOVOL:460V) + CAPPRE:IEC , (MOVOL:230V , MOVOL:460V , MOVOL:575V) + CAPPRE:ULCUL + CAPPRM:ASME + FREQ:60HZ) + COOL:AIR **(05/02/2020 - 30/12/2027)** (CAPPRE:IEC + CAPPRM:MHLW + FREQ:50HZ + MOVOL:200V , CAPPRE:ULCUL + CAPPRM:ASME + FREQ:60HZ + MOVOL:230V) + COOL:AIR	K5
	0991 8011 21	AR	CABLE TRAY	**(12/12/2018 - 24/02/2019)** ((((CAPPRM:AS1210 , CAPPRM:CE , CAPPRM:MHLW , CAPPRM:MOM) + MOVOL:400V , (CAPPRM:CE + MOVOL:500V , CAPPRM:MHLW + MOVOL:200V) + COOL:AIR) + FREQ:50HZ , (CAPPRM:ASME , CAPPRM:MHLW) + FREQ:60HZ + MOVOL:460V) + CAPPRE:IEC , ((MOVOL:230V , MOVOL:575V) + COOL:AIR , MOVOL:460V) + CAPPRE:ULCUL + CAPPRM:ASME + FREQ:60HZ) **(25/02/2019 - 04/02/2020)** ((((CAPPRM:AS1210 , CAPPRM:CE , CAPPRM:MHLW , CAPPRM:MOM) + MOVOL:400V , CAPPRM:CE + MOVOL:500V , CAPPRM:MHLW + MOVOL:200V) + FREQ:50HZ , (CAPPRM:ASME , CAPPRM:MHLW) + FREQ:60HZ + MOVOL:460V) + CAPPRE:IEC , (MOVOL:230V , MOVOL:460V , MOVOL:575V) + CAPPRE:ULCUL + CAPPRM:ASME + FREQ:60HZ) + COOL:AIR **(05/02/2020 - 30/12/2027)** (CAPPRE:IEC + CAPPRM:MHLW + FREQ:50HZ + MOVOL:200V , CAPPRE:ULCUL + CAPPRM:ASME + FREQ:60HZ + MOVOL:230V) + COOL:AIR	L=1384mm

Legend:

CAPPRE:IEC - Component approval electrical:IEC
CAPPRE:ULCUL - Component approval electrical:UL/cUL
CAPPRM:AS1210 - Component approval mechanical:AS1210
CAPPRM:ASME - Component approval mechanical:ASME
CAPPRM:CE - Component approval mechanical:CE
CAPPRM:MHLW - Component approval mechanical:MHLW
CAPPRM:MOM - Component approval mechanical:MOM
COOL:AIR - Cooling:Air cooled
FREQ:50HZ - Frequency:50 Hz
FREQ:60HZ - Frequency:60 Hz
IDRY:Y - Integrated dryer:Yes
MODEL:GA110VP_16 - Model:GA 110VSD+
MOVOL:200V - Supply voltage:200 V
MOVOL:230V - Supply voltage:230 V
MOVOL:400V - Supply voltage:400 V
MOVOL:460V - Supply voltage:460 V
MOVOL:500V - Supply voltage:500 V
MOVOL:575V - Supply voltage:575 V

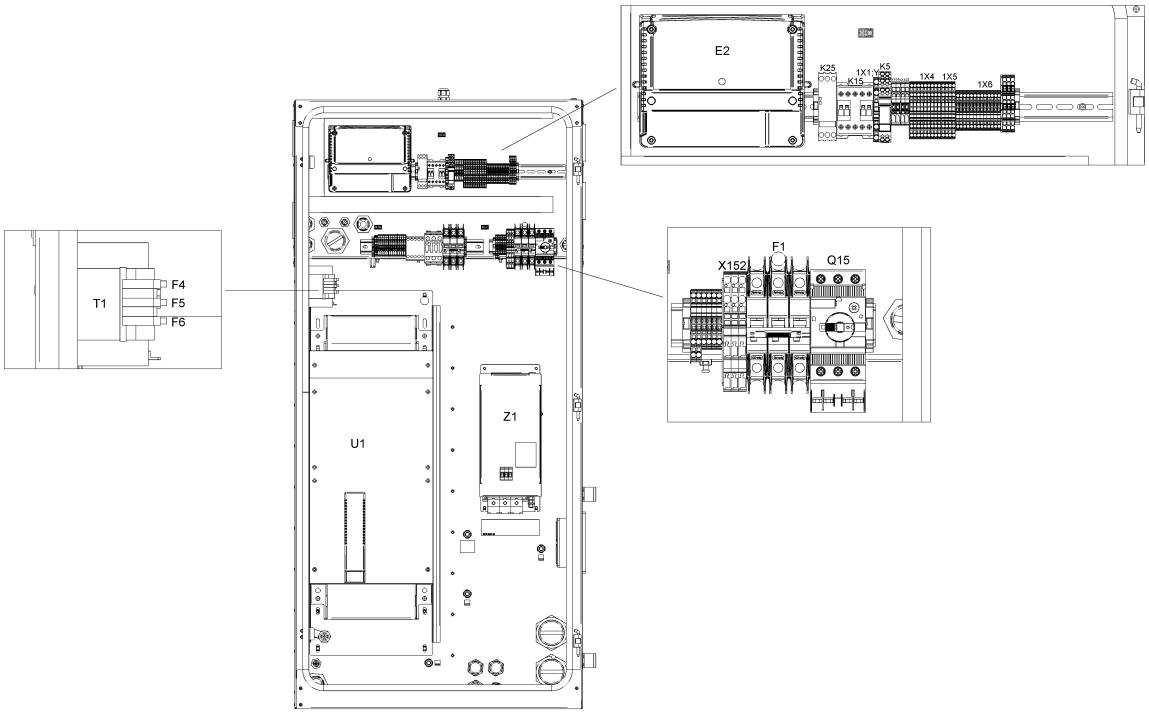
E2
K25
K15
1X1
K5
1X4
1X5
1X6
T1
F4
F5
F6
X152
F1
Q15
U1
Z1

21.27 - Cubicle components GA 110 VSD+ - (200V-400V-500V/50Hz, 460V/60Hz - IEC, 230V-460V-575V/60Hz - UL-cUL) - Full-Feature (12/12/2018 - 04/02/2020)

(((MOVOL:200V , MOVOL:400V , MOVOL:500V) + FREQ:50HZ , FREQ:60HZ + MOVOL:460V) + CAPPRE:IEC , (MOVOL:230V , MOVOL:460V , MOVOL:575V) + CAPPRE:ULCUL + FREQ:60HZ) + IDRY:Y + MODEL:GA110VP_16

Ref	Part Number	Qty	Name	Validity	EL
	1900 2203 02	1	DRYER RAIL	**(12/12/2018 - 24/02/2019)** ((((CAPPRM:AS1210 , CAPPRM:CE , CAPPRM:MHLW , CAPPRM:MOM) + MOVOL:400V , (CAPPRM:CE + MOVOL:500V , CAPPRM:MHLW + MOVOL:200V) + COOL:AIR) + FREQ:50HZ , (CAPPRM:ASME , CAPPRM:MHLW) + FREQ:60HZ + MOVOL:460V) + CAPPRE:IEC , ((MOVOL:230V , MOVOL:575V) + COOL:AIR , MOVOL:460V) + CAPPRE:ULCUL + CAPPRM:ASME + FREQ:60HZ) **(25/02/2019 - 04/02/2020)** ((((CAPPRM:AS1210 , CAPPRM:CE , CAPPRM:MHLW , CAPPRM:MOM) + MOVOL:400V , CAPPRM:CE + MOVOL:500V , CAPPRM:MHLW + MOVOL:200V) + FREQ:50HZ , (CAPPRM:ASME , CAPPRM:MHLW) + FREQ:60HZ + MOVOL:460V) + CAPPRE:IEC , (MOVOL:230V , MOVOL:460V , MOVOL:575V) + CAPPRE:ULCUL + CAPPRM:ASME + FREQ:60HZ) + COOL:AIR **(05/02/2020 - 30/12/2027)** (CAPPRE:IEC + CAPPRM:MHLW + FREQ:50HZ + MOVOL:200V , CAPPRE:ULCUL + CAPPRM:ASME + FREQ:60HZ + MOVOL:230V) + COOL:AIR	
	Electrical legend:	Without trafo on dryer			
	1088 0031 13	1	CONNECTOR 13-POLE	**(12/12/2018 - 24/02/2019)** ((((CAPPRM:AS1210 , CAPPRM:CE , CAPPRM:MHLW , CAPPRM:MOM) + MOVOL:400V , (CAPPRM:CE + MOVOL:500V , CAPPRM:MHLW + MOVOL:200V) + COOL:AIR) + FREQ:50HZ , (CAPPRM:ASME , CAPPRM:MHLW) + FREQ:60HZ + MOVOL:460V) + CAPPRE:IEC , ((MOVOL:230V , MOVOL:575V) + COOL:AIR , MOVOL:460V) + CAPPRE:ULCUL + CAPPRM:ASME + FREQ:60HZ) **(25/02/2019 - 04/02/2020)** ((((CAPPRM:AS1210 , CAPPRM:CE , CAPPRM:MHLW , CAPPRM:MOM) + MOVOL:400V , CAPPRM:CE + MOVOL:500V , CAPPRM:MHLW + MOVOL:200V) + FREQ:50HZ , (CAPPRM:ASME , CAPPRM:MHLW) + FREQ:60HZ + MOVOL:460V) + CAPPRE:IEC , (MOVOL:230V , MOVOL:460V , MOVOL:575V) + CAPPRE:ULCUL + CAPPRM:ASME + FREQ:60HZ) + COOL:AIR **(05/02/2020 - 30/12/2027)** (CAPPRE:IEC + CAPPRM:MHLW + FREQ:50HZ + MOVOL:200V , CAPPRE:ULCUL + CAPPRM:ASME + FREQ:60HZ + MOVOL:230V) + COOL:AIR	1X30
	1088 0037 82	1	CONNECTOR	**(12/12/2018 - 24/02/2019)** ((((CAPPRM:AS1210 , CAPPRM:CE , CAPPRM:MHLW , CAPPRM:MOM) + MOVOL:400V , (CAPPRM:CE + MOVOL:500V , CAPPRM:MHLW + MOVOL:200V) + COOL:AIR) + FREQ:50HZ , (CAPPRM:ASME , CAPPRM:MHLW) + FREQ:60HZ + MOVOL:460V) + CAPPRE:IEC , ((MOVOL:230V , MOVOL:575V) + COOL:AIR , MOVOL:460V) + CAPPRE:ULCUL + CAPPRM:ASME + FREQ:60HZ) **(25/02/2019 - 04/02/2020)** ((((CAPPRM:AS1210 , CAPPRM:CE , CAPPRM:MHLW , CAPPRM:MOM) + MOVOL:400V , CAPPRM:CE + MOVOL:500V , CAPPRM:MHLW + MOVOL:200V) + FREQ:50HZ , (CAPPRM:ASME , CAPPRM:MHLW) + FREQ:60HZ + MOVOL:460V) + CAPPRE:IEC , (MOVOL:230V , MOVOL:460V , MOVOL:575V) + CAPPRE:ULCUL + CAPPRM:ASME + FREQ:60HZ) + COOL:AIR **(05/02/2020 - 30/12/2027)** (CAPPRE:IEC + CAPPRM:MHLW + FREQ:50HZ + MOVOL:200V , CAPPRE:ULCUL + CAPPRM:ASME + FREQ:60HZ + MOVOL:230V) + COOL:AIR	3X34

Legend:

CAPPRE:IEC - Component approval electrical:IEC
CAPPRE:ULCUL - Component approval electrical:UL/cUL
CAPPRM:AS1210 - Component approval mechanical:AS1210
CAPPRM:ASME - Component approval mechanical:ASME
CAPPRM:CE - Component approval mechanical:CE
CAPPRM:MHLW - Component approval mechanical:MHLW
CAPPRM:MOM - Component approval mechanical:MOM
COOL:AIR - Cooling:Air cooled
FREQ:50HZ - Frequency:50 Hz
FREQ:60HZ - Frequency:60 Hz
IDRY:Y - Integrated dryer:Yes
MODEL:GA110VP_16 - Model:GA 110VSD+
MOVOL:200V - Supply voltage:200 V
MOVOL:230V - Supply voltage:230 V
MOVOL:400V - Supply voltage:400 V
MOVOL:460V - Supply voltage:460 V
MOVOL:500V - Supply voltage:500 V
MOVOL:575V - Supply voltage:575 V

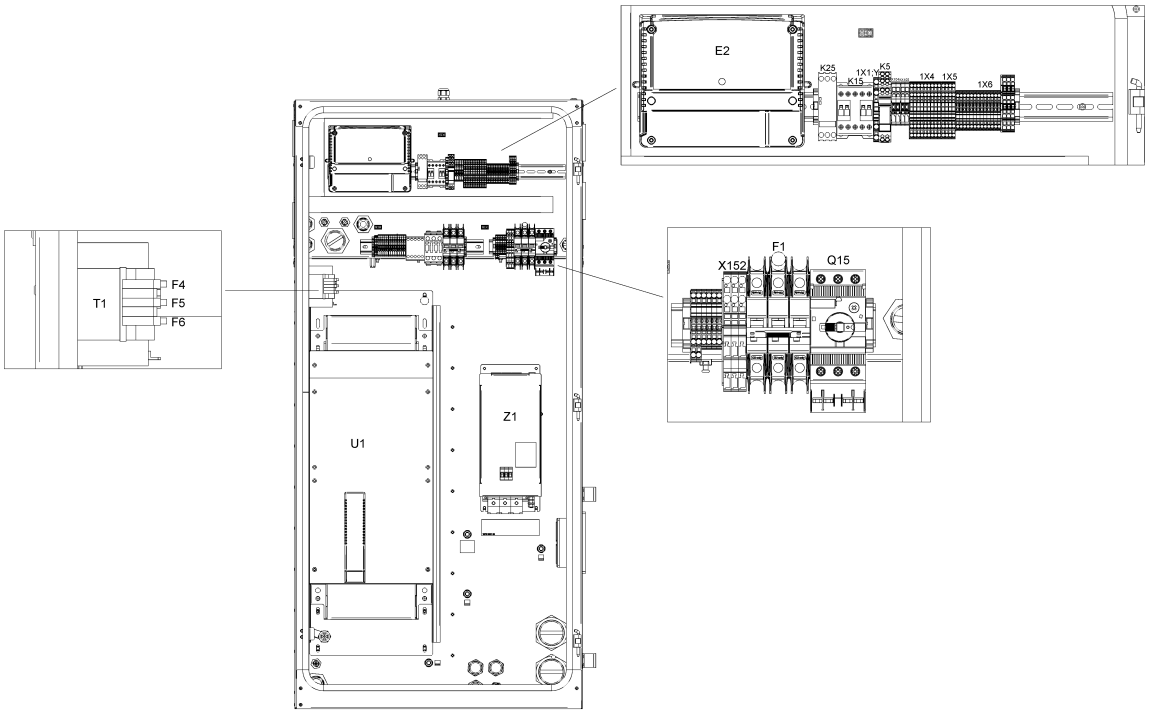
E2
K25
K15
1X1
K5
1X4
1X5
1X6
T1
F4
F5
F6
X152
F1
Q15
U1
Z1

Ref	Part Number	Qty	Name	Validity	EL
	0697 9811 13	1	PLUG	**(12/12/2018 - 24/02/2019)** ((((CAPPRM:AS1210 , CAPPRM:CE , CAPPRM:MHLW , CAPPRM:MOM) + MOVOL:400V , (CAPPRM:CE + MOVOL:500V , CAPPRM:MHLW + MOVOL:200V) + COOL:AIR) + FREQ:50HZ , (CAPPRM:ASME , CAPPRM:MHLW) + FREQ:60HZ + MOVOL:460V) + CAPPRE:IEC , ((MOVOL:230V , MOVOL:575V) + COOL:AIR , MOVOL:460V) + CAPPRE:ULCUL + CAPPRM:ASME + FREQ:60HZ) **(25/02/2019 - 04/02/2020)** ((((CAPPRM:AS1210 , CAPPRM:CE , CAPPRM:MHLW , CAPPRM:MOM) + MOVOL:400V , CAPPRM:CE + MOVOL:500V , CAPPRM:MHLW + MOVOL:200V) + FREQ:50HZ , (CAPPRM:ASME , CAPPRM:MHLW) + FREQ:60HZ + MOVOL:460V) + CAPPRE:IEC , (MOVOL:230V , MOVOL:460V , MOVOL:575V) + CAPPRE:ULCUL + CAPPRM:ASME + FREQ:60HZ) + COOL:AIR **(05/02/2020 - 30/12/2027)** (CAPPRE:IEC + CAPPRM:MHLW + FREQ:50HZ + MOVOL:200V , CAPPRE:ULCUL + CAPPRM:ASME + FREQ:60HZ + MOVOL:230V) + COOL:AIR	
	Electrical legend:	Energy recovery			
	0989 3700 44	1	LOCKNUT	**(12/12/2018 - 24/02/2019)** ((((CAPPRM:AS1210 , CAPPRM:CE , CAPPRM:MHLW , CAPPRM:MOM) + MOVOL:400V , (CAPPRM:CE + MOVOL:500V , CAPPRM:MHLW + MOVOL:200V) + COOL:AIR) + FREQ:50HZ , (CAPPRM:ASME , CAPPRM:MHLW) + FREQ:60HZ + MOVOL:460V) + CAPPRE:IEC , ((MOVOL:230V , MOVOL:575V) + COOL:AIR , MOVOL:460V) + CAPPRE:ULCUL + CAPPRM:ASME + FREQ:60HZ) **(25/02/2019 - 04/02/2020)** ((((CAPPRM:AS1210 , CAPPRM:CE , CAPPRM:MHLW , CAPPRM:MOM) + MOVOL:400V , CAPPRM:CE + MOVOL:500V , CAPPRM:MHLW + MOVOL:200V) + FREQ:50HZ , (CAPPRM:ASME , CAPPRM:MHLW) + FREQ:60HZ + MOVOL:460V) + CAPPRE:IEC , (MOVOL:230V , MOVOL:460V , MOVOL:575V) + CAPPRE:ULCUL + CAPPRM:ASME + FREQ:60HZ) + COOL:AIR **(05/02/2020 - 30/12/2027)** (CAPPRE:IEC + CAPPRM:MHLW + FREQ:50HZ + MOVOL:200V , CAPPRE:ULCUL + CAPPRM:ASME + FREQ:60HZ + MOVOL:230V) + COOL:AIR	
	Electrical legend:	Energy recovery			
	0697 9811 12	1	PLUG	**(12/12/2018 - 24/02/2019)** ((((CAPPRM:AS1210 , CAPPRM:CE , CAPPRM:MHLW , CAPPRM:MOM) + MOVOL:400V , (CAPPRM:CE + MOVOL:500V , CAPPRM:MHLW + MOVOL:200V) + COOL:AIR) + FREQ:50HZ , (CAPPRM:ASME , CAPPRM:MHLW) + FREQ:60HZ + MOVOL:460V) + CAPPRE:IEC , ((MOVOL:230V , MOVOL:575V) + COOL:AIR , MOVOL:460V) + CAPPRE:ULCUL + CAPPRM:ASME + FREQ:60HZ) **(25/02/2019 - 04/02/2020)** ((((CAPPRM:AS1210 , CAPPRM:CE , CAPPRM:MHLW , CAPPRM:MOM) + MOVOL:400V , CAPPRM:CE + MOVOL:500V , CAPPRM:MHLW + MOVOL:200V) + FREQ:50HZ , (CAPPRM:ASME , CAPPRM:MHLW) + FREQ:60HZ + MOVOL:460V) + CAPPRE:IEC , (MOVOL:230V , MOVOL:460V , MOVOL:575V) + CAPPRE:ULCUL + CAPPRM:ASME + FREQ:60HZ) + COOL:AIR **(05/02/2020 - 30/12/2027)** (CAPPRE:IEC + CAPPRM:MHLW + FREQ:50HZ + MOVOL:200V , CAPPRE:ULCUL + CAPPRM:ASME + FREQ:60HZ + MOVOL:230V) + COOL:AIR	
	Electrical legend:	Control circuit of T10			

Legend:

CAPPRE:IEC - Component approval electrical:IEC
CAPPRE:ULCUL - Component approval electrical:UL/cUL
CAPPRM:AS1210 - Component approval mechanical:AS1210
CAPPRM:ASME - Component approval mechanical:ASME
CAPPRM:CE - Component approval mechanical:CE
CAPPRM:MHLW - Component approval mechanical:MHLW
CAPPRM:MOM - Component approval mechanical:MOM
COOL:AIR - Cooling:Air cooled
FREQ:50HZ - Frequency:50 Hz
FREQ:60HZ - Frequency:60 Hz
IDRY:Y - Integrated dryer:Yes
MODEL:GA110VP_16 - Model:GA 110VSD+
MOVOL:200V - Supply voltage:200 V
MOVOL:230V - Supply voltage:230 V
MOVOL:400V - Supply voltage:400 V
MOVOL:460V - Supply voltage:460 V
MOVOL:500V - Supply voltage:500 V
MOVOL:575V - Supply voltage:575 V

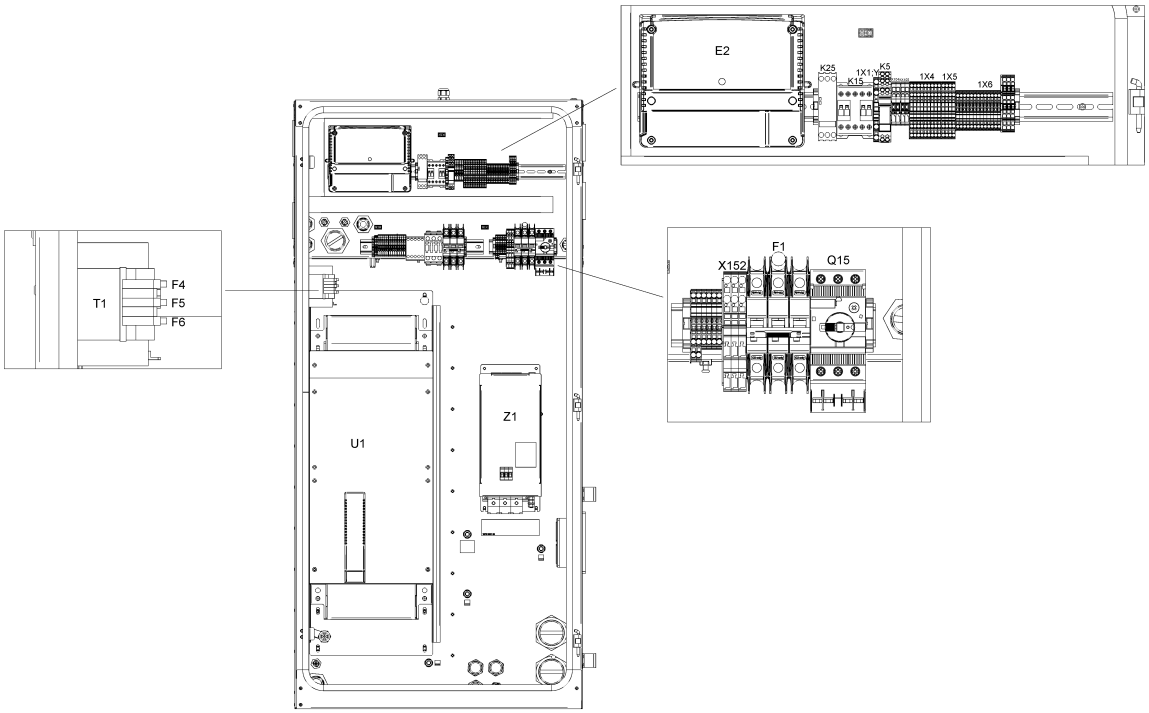
E2
K25
K15
1X1
K5
1X4
1X5
1X6
T1
F4
F5
F6
X152
F1
Q15
U1
Z1

Ref	Part Number	Qty	Name	Validity	EL
	0989 3700 43	1	NUT	**(12/12/2018 - 24/02/2019)** ((((CAPPRM:AS1210 , CAPPRM:CE , CAPPRM:MHLW , CAPPRM:MOM) + MOVOL:400V , (CAPPRM:CE + MOVOL:500V , CAPPRM:MHLW + MOVOL:200V) + COOL:AIR) + FREQ:50HZ , (CAPPRM:ASME , CAPPRM:MHLW) + FREQ:60HZ + MOVOL:460V) + CAPPRE:IEC , ((MOVOL:230V , MOVOL:575V) + COOL:AIR , MOVOL:460V) + CAPPRE:ULCUL + CAPPRM:ASME + FREQ:60HZ) **(25/02/2019 - 04/02/2020)** ((((CAPPRM:AS1210 , CAPPRM:CE , CAPPRM:MHLW , CAPPRM:MOM) + MOVOL:400V , CAPPRM:CE + MOVOL:500V , CAPPRM:MHLW + MOVOL:200V) + FREQ:50HZ , (CAPPRM:ASME , CAPPRM:MHLW) + FREQ:60HZ + MOVOL:460V) + CAPPRE:IEC , (MOVOL:230V , MOVOL:460V , MOVOL:575V) + CAPPRE:ULCUL + CAPPRM:ASME + FREQ:60HZ) + COOL:AIR **(05/02/2020 - 30/12/2027)** (CAPPRE:IEC + CAPPRM:MHLW + FREQ:50HZ + MOVOL:200V , CAPPRE:ULCUL + CAPPRM:ASME + FREQ:60HZ + MOVOL:230V) + COOL:AIR	
	Electrical legend:	Control circuit of T10			
	0697 9811 10	1	PLUG	**(12/12/2018 - 24/02/2019)** ((((CAPPRM:AS1210 , CAPPRM:CE , CAPPRM:MHLW , CAPPRM:MOM) + MOVOL:400V , (CAPPRM:CE + MOVOL:500V , CAPPRM:MHLW + MOVOL:200V) + COOL:AIR) + FREQ:50HZ , (CAPPRM:ASME , CAPPRM:MHLW) + FREQ:60HZ + MOVOL:460V) + CAPPRE:IEC , ((MOVOL:230V , MOVOL:575V) + COOL:AIR , MOVOL:460V) + CAPPRE:ULCUL + CAPPRM:ASME + FREQ:60HZ) **(25/02/2019 - 04/02/2020)** ((((CAPPRM:AS1210 , CAPPRM:CE , CAPPRM:MHLW , CAPPRM:MOM) + MOVOL:400V , CAPPRM:CE + MOVOL:500V , CAPPRM:MHLW + MOVOL:200V) + FREQ:50HZ , (CAPPRM:ASME , CAPPRM:MHLW) + FREQ:60HZ + MOVOL:460V) + CAPPRE:IEC , (MOVOL:230V , MOVOL:460V , MOVOL:575V) + CAPPRE:ULCUL + CAPPRM:ASME + FREQ:60HZ) + COOL:AIR **(05/02/2020 - 30/12/2027)** (CAPPRE:IEC + CAPPRM:MHLW + FREQ:50HZ + MOVOL:200V , CAPPRE:ULCUL + CAPPRM:ASME + FREQ:60HZ + MOVOL:230V) + COOL:AIR	
	Electrical legend:	Plug for smartbox hole			
	0989 3700 41	1	LOCKNUT	**(12/12/2018 - 24/02/2019)** ((((CAPPRM:AS1210 , CAPPRM:CE , CAPPRM:MHLW , CAPPRM:MOM) + MOVOL:400V , (CAPPRM:CE + MOVOL:500V , CAPPRM:MHLW + MOVOL:200V) + COOL:AIR) + FREQ:50HZ , (CAPPRM:ASME , CAPPRM:MHLW) + FREQ:60HZ + MOVOL:460V) + CAPPRE:IEC , ((MOVOL:230V , MOVOL:575V) + COOL:AIR , MOVOL:460V) + CAPPRE:ULCUL + CAPPRM:ASME + FREQ:60HZ) **(25/02/2019 - 04/02/2020)** ((((CAPPRM:AS1210 , CAPPRM:CE , CAPPRM:MHLW , CAPPRM:MOM) + MOVOL:400V , CAPPRM:CE + MOVOL:500V , CAPPRM:MHLW + MOVOL:200V) + FREQ:50HZ , (CAPPRM:ASME , CAPPRM:MHLW) + FREQ:60HZ + MOVOL:460V) + CAPPRE:IEC , (MOVOL:230V , MOVOL:460V , MOVOL:575V) + CAPPRE:ULCUL + CAPPRM:ASME + FREQ:60HZ) + COOL:AIR **(05/02/2020 - 30/12/2027)** (CAPPRE:IEC + CAPPRM:MHLW + FREQ:50HZ + MOVOL:200V , CAPPRE:ULCUL + CAPPRM:ASME + FREQ:60HZ + MOVOL:230V) + COOL:AIR	
	Electrical legend:	Nut for smartbox hole			

Legend:

CAPPRE:IEC - Component approval electrical:IEC
CAPPRE:ULCUL - Component approval electrical:UL/cUL
CAPPRM:AS1210 - Component approval mechanical:AS1210
CAPPRM:ASME - Component approval mechanical:ASME
CAPPRM:CE - Component approval mechanical:CE
CAPPRM:MHLW - Component approval mechanical:MHLW
CAPPRM:MOM - Component approval mechanical:MOM
COOL:AIR - Cooling:Air cooled
FREQ:50HZ - Frequency:50 Hz
FREQ:60HZ - Frequency:60 Hz
IDRY:Y - Integrated dryer:Yes
MODEL:GA110VP_16 - Model:GA 110VSD+
MOVOL:200V - Supply voltage:200 V
MOVOL:230V - Supply voltage:230 V
MOVOL:400V - Supply voltage:400 V
MOVOL:460V - Supply voltage:460 V
MOVOL:500V - Supply voltage:500 V
MOVOL:575V - Supply voltage:575 V

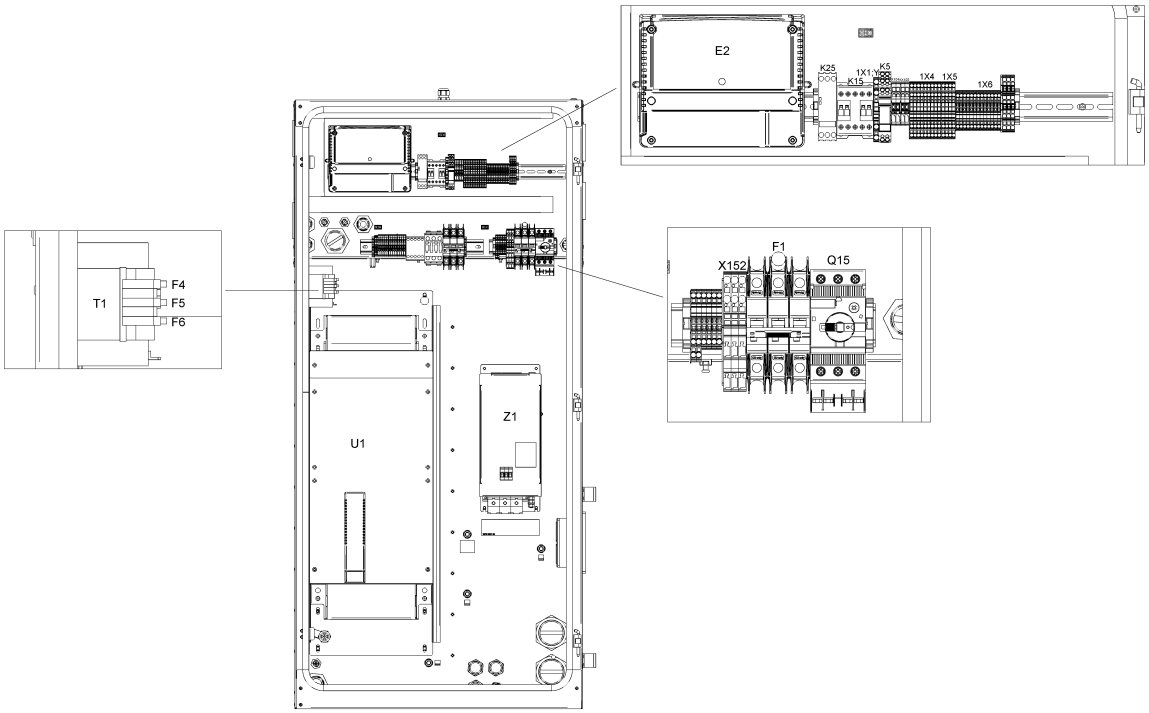
E2
K25
K15
1X1
K5
1X4
1X5
1X6
T1
F4
F5
F6
X152
F1
Q15
U1
Z1

21.28 - Cubicle components GA 110 VSD+ - (200V-400V-500V/50Hz, 460V/60Hz - IEC, 230V-460V-575V/60Hz - UL-cUL) - Full-Feature (05/02/2020 - ...)

(((MOVOL:200V , MOVOL:400V , MOVOL:500V) + FREQ:50HZ , FREQ:60HZ + MOVOL:460V) + CAPPRE:IEC , (MOVOL:230V , MOVOL:460V , MOVOL:575V) + CAPPRE:ULCUL + FREQ:60HZ) + IDRY:Y + MODEL:GA110VP_16

Ref	Part Number	Qty	Name	Validity	EL
	1900220256	1	CUBICLE	**(05/02/2020 - ...)**	
	9820 3000 31	1	ASSEMBLY DRAWING	**(25/02/2019 - 04/02/2020)** (((CAPPRM:AS1210 , CAPPRM:CE , CAPPRM:MHLW , CAPPRM:MOM) + FREQ:50HZ + MOVOL:400V , (CAPPRM:ASME , CAPPRM:MHLW) + FREQ:60HZ + MOVOL:460V) + CAPPRE:IEC , CAPPRE:ULCUL + CAPPRM:ASME + FREQ:60HZ + MOVOL:460V) + COOL:WATER **(05/02/2020 - ...)** ((((CAPPRM:AS1210 , CAPPRM:CE , CAPPRM:MHLW , CAPPRM:MOM) + MOVOL:400V , CAPPRM:CE + COOL:AIR + MOVOL:500V) + FREQ:50HZ , (CAPPRM:ASME , CAPPRM:MHLW) + FREQ:60HZ + MOVOL:460V) + CAPPRE:IEC , (COOL:AIR + MOVOL:575V , MOVOL:460V) + CAPPRE:ULCUL + CAPPRM:ASME + FREQ:60HZ)	AD
	9820 3000 27	1	SERVICE DIAGRAM	**(25/02/2019 - 04/02/2020)** (((CAPPRM:AS1210 , CAPPRM:CE , CAPPRM:MHLW , CAPPRM:MOM) + FREQ:50HZ + MOVOL:400V , (CAPPRM:ASME , CAPPRM:MHLW) + FREQ:60HZ + MOVOL:460V) + CAPPRE:IEC , CAPPRE:ULCUL + CAPPRM:ASME + FREQ:60HZ + MOVOL:460V) + COOL:WATER **(05/02/2020 - ...)** ((((CAPPRM:AS1210 , CAPPRM:CE , CAPPRM:MHLW , CAPPRM:MOM) + MOVOL:400V , CAPPRM:CE + COOL:AIR + MOVOL:500V) + FREQ:50HZ , (CAPPRM:ASME , CAPPRM:MHLW) + FREQ:60HZ + MOVOL:460V) + CAPPRE:IEC , (COOL:AIR + MOVOL:575V , MOVOL:460V) + CAPPRE:ULCUL + CAPPRM:ASME + FREQ:60HZ)	SD
	1622 3798 72	1	WIRE HARNESS	**(25/02/2019 - 04/02/2020)** (((CAPPRM:AS1210 , CAPPRM:CE , CAPPRM:MHLW , CAPPRM:MOM) + FREQ:50HZ + MOVOL:400V , (CAPPRM:ASME , CAPPRM:MHLW) + FREQ:60HZ + MOVOL:460V) + CAPPRE:IEC , CAPPRE:ULCUL + CAPPRM:ASME + FREQ:60HZ + MOVOL:460V) + COOL:WATER **(05/02/2020 - ...)** ((((CAPPRM:AS1210 , CAPPRM:CE , CAPPRM:MHLW , CAPPRM:MOM) + MOVOL:400V , CAPPRM:CE + COOL:AIR + MOVOL:500V) + FREQ:50HZ , (CAPPRM:ASME , CAPPRM:MHLW) + FREQ:60HZ + MOVOL:460V) + CAPPRE:IEC , (COOL:AIR + MOVOL:575V , MOVOL:460V) + CAPPRE:ULCUL + CAPPRM:ASME + FREQ:60HZ)	Comm Cable
	1622 5099 04	1	DI CHANE CABLE (1400MM)	**(25/02/2019 - 04/02/2020)** (((CAPPRM:AS1210 , CAPPRM:CE , CAPPRM:MHLW , CAPPRM:MOM) + FREQ:50HZ + MOVOL:400V , (CAPPRM:ASME , CAPPRM:MHLW) + FREQ:60HZ + MOVOL:460V) + CAPPRE:IEC , CAPPRE:ULCUL + CAPPRM:ASME + FREQ:60HZ + MOVOL:460V) + COOL:WATER **(05/02/2020 - ...)** ((((CAPPRM:AS1210 , CAPPRM:CE , CAPPRM:MHLW , CAPPRM:MOM) + MOVOL:400V , CAPPRM:CE + COOL:AIR + MOVOL:500V) + FREQ:50HZ , (CAPPRM:ASME , CAPPRM:MHLW) + FREQ:60HZ + MOVOL:460V) + CAPPRE:IEC , (COOL:AIR + MOVOL:575V , MOVOL:460V) + CAPPRE:ULCUL + CAPPRM:ASME + FREQ:60HZ)	

Electrical legend: Comm Cable Loose supply

Legend:

CAPPRE:IEC - Component approval electrical:IEC
CAPPRE:ULCUL - Component approval electrical:UL/cUL
CAPPRM:AS1210 - Component approval mechanical:AS1210
CAPPRM:ASME - Component approval mechanical:ASME
CAPPRM:CE - Component approval mechanical:CE
CAPPRM:MHLW - Component approval mechanical:MHLW
CAPPRM:MOM - Component approval mechanical:MOM
COOL:AIR - Cooling:Air cooled
COOL:WATER - Cooling:Water cooled
FREQ:50HZ - Frequency:50 Hz
FREQ:60HZ - Frequency:60 Hz
IDRY:Y - Integrated dryer:Yes
MODEL:GA110VP_16 - Model:GA 110VSD+
MOVOL:200V - Supply voltage:200 V
MOVOL:230V - Supply voltage:230 V
MOVOL:400V - Supply voltage:400 V
MOVOL:460V - Supply voltage:460 V
MOVOL:500V - Supply voltage:500 V
MOVOL:575V - Supply voltage:575 V

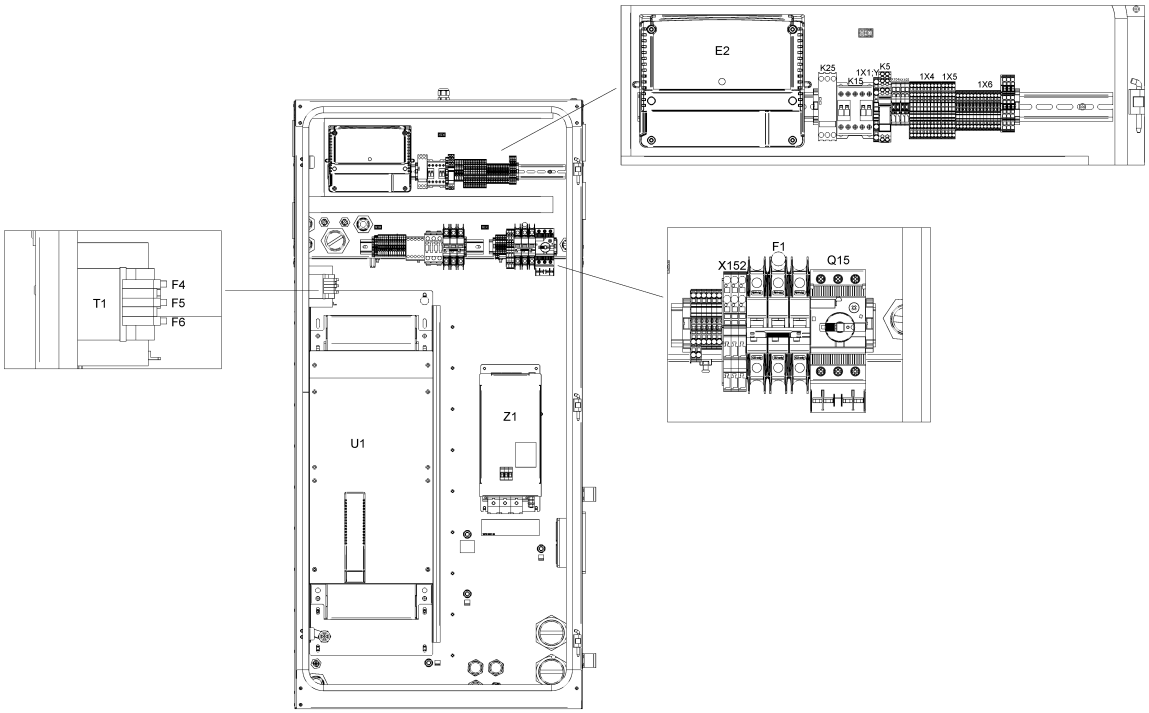
E2
K25
K15
1X1
K5
1X4
1X5
1X6
T1
F4
F5
F6
X152
F1
Q15
U1
Z1

21.28 - Cubicle components GA 110 VSD+ - (200V-400V-500V/50Hz, 460V/60Hz - IEC, 230V-460V-575V/60Hz - UL-cUL) - Full-Feature (05/02/2020 - ...)

(((MOVOL:200V , MOVOL:400V , MOVOL:500V) + FREQ:50HZ , FREQ:60HZ + MOVOL:460V) + CAPPRE:IEC , (MOVOL:230V , MOVOL:460V , MOVOL:575V) + CAPPRE:ULCUL + FREQ:60HZ) + IDRY:Y + MODEL:GA110VP_16

Ref	Part Number	Qty	Name	Validity	EL
	1649 8006 00	1	CUBICLE	**(25/02/2019 - 04/02/2020)** (((CAPPRM:AS1210 , CAPPRM:CE , CAPPRM:MHLW , CAPPRM:MOM) + FREQ:50HZ + MOVOL:400V , (CAPPRM:ASME , CAPPRM:MHLW) + FREQ:60HZ + MOVOL:460V) + CAPPRE:IEC , CAPPRE:ULCUL + CAPPRM:ASME + FREQ:60HZ + MOVOL:460V) + COOL:WATER **(05/02/2020 - ...)** ((((CAPPRM:AS1210 , CAPPRM:CE , CAPPRM:MHLW , CAPPRM:MOM) + MOVOL:400V , CAPPRM:CE + COOL:AIR + MOVOL:500V) + FREQ:50HZ , (CAPPRM:ASME , CAPPRM:MHLW) + FREQ:60HZ + MOVOL:460V) + CAPPRE:IEC , (COOL:AIR + MOVOL:575V , MOVOL:460V) + CAPPRE:ULCUL + CAPPRM:ASME + FREQ:60HZ)	MSA
	1649 8001 31	1	PLATE NEOS "E"	**(25/02/2019 - 04/02/2020)** (((CAPPRM:AS1210 , CAPPRM:CE , CAPPRM:MHLW , CAPPRM:MOM) + FREQ:50HZ + MOVOL:400V , (CAPPRM:ASME , CAPPRM:MHLW) + FREQ:60HZ + MOVOL:460V) + CAPPRE:IEC , CAPPRE:ULCUL + CAPPRM:ASME + FREQ:60HZ + MOVOL:460V) + COOL:WATER **(05/02/2020 - ...)** ((((CAPPRM:AS1210 , CAPPRM:CE , CAPPRM:MHLW , CAPPRM:MOM) + MOVOL:400V , CAPPRM:CE + COOL:AIR + MOVOL:500V) + FREQ:50HZ , (CAPPRM:ASME , CAPPRM:MHLW) + FREQ:60HZ + MOVOL:460V) + CAPPRE:IEC , (COOL:AIR + MOVOL:575V , MOVOL:460V) + CAPPRE:ULCUL + CAPPRM:ASME + FREQ:60HZ)	
	Electrical legend:	Mounting plate			
	1649 8003 85	1	MOUNTING PLATE	**(25/02/2019 - 04/02/2020)** (((CAPPRM:AS1210 , CAPPRM:CE , CAPPRM:MHLW , CAPPRM:MOM) + FREQ:50HZ + MOVOL:400V , (CAPPRM:ASME , CAPPRM:MHLW) + FREQ:60HZ + MOVOL:460V) + CAPPRE:IEC , CAPPRE:ULCUL + CAPPRM:ASME + FREQ:60HZ + MOVOL:460V) + COOL:WATER **(05/02/2020 - ...)** ((((CAPPRM:AS1210 , CAPPRM:CE , CAPPRM:MHLW , CAPPRM:MOM) + MOVOL:400V , CAPPRM:CE + COOL:AIR + MOVOL:500V) + FREQ:50HZ , (CAPPRM:ASME , CAPPRM:MHLW) + FREQ:60HZ + MOVOL:460V) + CAPPRE:IEC , (COOL:AIR + MOVOL:575V , MOVOL:460V) + CAPPRE:ULCUL + CAPPRM:ASME + FREQ:60HZ)	
	Electrical legend:	Mounting plate			
	1649 8002 39	1	WIRE HARNESS	**(25/02/2019 - 04/02/2020)** (((CAPPRM:AS1210 , CAPPRM:CE , CAPPRM:MHLW , CAPPRM:MOM) + FREQ:50HZ + MOVOL:400V , (CAPPRM:ASME , CAPPRM:MHLW) + FREQ:60HZ + MOVOL:460V) + CAPPRE:IEC , CAPPRE:ULCUL + CAPPRM:ASME + FREQ:60HZ + MOVOL:460V) + COOL:WATER **(05/02/2020 - ...)** ((((CAPPRM:AS1210 , CAPPRM:CE , CAPPRM:MHLW , CAPPRM:MOM) + MOVOL:400V , CAPPRM:CE + COOL:AIR + MOVOL:500V) + FREQ:50HZ , (CAPPRM:ASME , CAPPRM:MHLW) + FREQ:60HZ + MOVOL:460V) + CAPPRE:IEC , (COOL:AIR + MOVOL:575V , MOVOL:460V) + CAPPRE:ULCUL + CAPPRM:ASME + FREQ:60HZ)	WH

Legend:

CAPPRE:IEC - Component approval electrical:IEC
CAPPRM:ASME - Component approval mechanical:ASME
CAPPRM:MOM - Component approval mechanical:MOM
FREQ:50HZ - Frequency:50 Hz
MODEL:GA110VP_16 - Model:GA 110VSD+
MOVOL:400V - Supply voltage:400 V
MOVOL:575V - Supply voltage:575 V
CAPPRE:ULCUL - Component approval electrical:UL/cUL
CAPPRM:CE - Component approval mechanical:CE
COOL:AIR - Cooling:Air cooled
FREQ:60HZ - Frequency:60 Hz
MOVOL:200V - Supply voltage:200 V
MOVOL:460V - Supply voltage:460 V
CAPPRM:AS1210 - Component approval mechanical:AS1210
CAPPRM:MHLW - Component approval mechanical:MHLW
COOL:WATER - Cooling:Water cooled
IDRY:Y - Integrated dryer:Yes
MOVOL:230V - Supply voltage:230 V
MOVOL:500V - Supply voltage:500 V

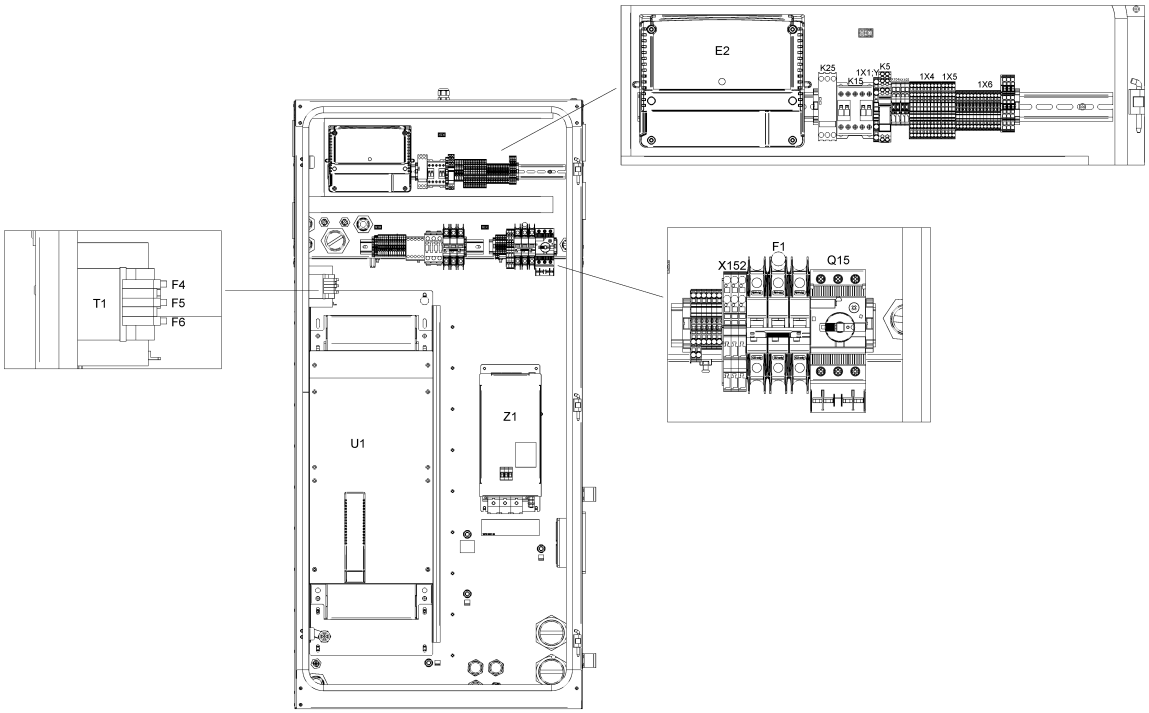
E2
K25
K15
1X1
K5
1X4
1X5
1X6
T1
F4
F5
F6
X152
F1
Q15
U1
Z1

21.28 - Cubicle components GA 110 VSD+ - (200V-400V-500V/50Hz, 460V/60Hz - IEC, 230V-460V-575V/60Hz - UL-cUL) - Full-Feature (05/02/2020 - ...)

(((MOVOL:200V , MOVOL:400V , MOVOL:500V) + FREQ:50HZ , FREQ:60HZ + MOVOL:460V) + CAPPRE:IEC , (MOVOL:230V , MOVOL:460V , MOVOL:575V) + CAPPRE:ULCUL + FREQ:60HZ) + IDRY:Y + MODEL:GA110VP_16

Ref	Part Number	Qty	Name	Validity	EL
	1649 8002 40	1	WIRE HARNESS	**(25/02/2019 - 04/02/2020)** (((CAPPRM:AS1210 , CAPPRM:CE , CAPPRM:MHLW , CAPPRM:MOM) + FREQ:50HZ + MOVOL:400V , (CAPPRM:ASME , CAPPRM:MHLW) + FREQ:60HZ + MOVOL:460V) + CAPPRE:IEC , CAPPRE:ULCUL + CAPPRM:ASME + FREQ:60HZ + MOVOL:460V) + COOL:WATER **(05/02/2020 - ...)** ((((CAPPRM:AS1210 , CAPPRM:CE , CAPPRM:MHLW , CAPPRM:MOM) + MOVOL:400V , CAPPRM:CE + COOL:AIR + MOVOL:500V) + FREQ:50HZ , (CAPPRM:ASME , CAPPRM:MHLW) + FREQ:60HZ + MOVOL:460V) + CAPPRE:IEC , (COOL:AIR + MOVOL:575V , MOVOL:460V) + CAPPRE:ULCUL + CAPPRM:ASME + FREQ:60HZ)	WH
	1649 8002 72	1	CABLE POWER	**(25/02/2019 - 04/02/2020)** (((CAPPRM:AS1210 , CAPPRM:CE , CAPPRM:MHLW , CAPPRM:MOM) + FREQ:50HZ + MOVOL:400V , (CAPPRM:ASME , CAPPRM:MHLW) + FREQ:60HZ + MOVOL:460V) + CAPPRE:IEC , CAPPRE:ULCUL + CAPPRM:ASME + FREQ:60HZ + MOVOL:460V) + COOL:WATER **(05/02/2020 - ...)** ((((CAPPRM:AS1210 , CAPPRM:CE , CAPPRM:MHLW , CAPPRM:MOM) + MOVOL:400V , CAPPRM:CE + COOL:AIR + MOVOL:500V) + FREQ:50HZ , (CAPPRM:ASME , CAPPRM:MHLW) + FREQ:60HZ + MOVOL:460V) + CAPPRE:IEC , (COOL:AIR + MOVOL:575V , MOVOL:460V) + CAPPRE:ULCUL + CAPPRM:ASME + FREQ:60HZ)	
	Electrical legend:	Full feature (FF) Drain			
	1649 8002 73	1	WIRE HARNESS	**(25/02/2019 - 04/02/2020)** (((CAPPRM:AS1210 , CAPPRM:CE , CAPPRM:MHLW , CAPPRM:MOM) + FREQ:50HZ + MOVOL:400V , (CAPPRM:ASME , CAPPRM:MHLW) + FREQ:60HZ + MOVOL:460V) + CAPPRE:IEC , CAPPRE:ULCUL + CAPPRM:ASME + FREQ:60HZ + MOVOL:460V) + COOL:WATER **(05/02/2020 - ...)** ((((CAPPRM:AS1210 , CAPPRM:CE , CAPPRM:MHLW , CAPPRM:MOM) + MOVOL:400V , CAPPRM:CE + COOL:AIR + MOVOL:500V) + FREQ:50HZ , (CAPPRM:ASME , CAPPRM:MHLW) + FREQ:60HZ + MOVOL:460V) + CAPPRE:IEC , (COOL:AIR + MOVOL:575V , MOVOL:460V) + CAPPRE:ULCUL + CAPPRM:ASME + FREQ:60HZ)	
	Electrical legend:	Pack Drain + Air filter switch			
	1649 8002 75	1	WIRE HARNESS	**(25/02/2019 - 04/02/2020)** (((CAPPRM:AS1210 , CAPPRM:CE , CAPPRM:MHLW , CAPPRM:MOM) + FREQ:50HZ + MOVOL:400V , (CAPPRM:ASME , CAPPRM:MHLW) + FREQ:60HZ + MOVOL:460V) + CAPPRE:IEC , CAPPRE:ULCUL + CAPPRM:ASME + FREQ:60HZ + MOVOL:460V) + COOL:WATER **(05/02/2020 - ...)** ((((CAPPRM:AS1210 , CAPPRM:CE , CAPPRM:MHLW , CAPPRM:MOM) + MOVOL:400V , CAPPRM:CE + COOL:AIR + MOVOL:500V) + FREQ:50HZ , (CAPPRM:ASME , CAPPRM:MHLW) + FREQ:60HZ + MOVOL:460V) + CAPPRE:IEC , (COOL:AIR + MOVOL:575V , MOVOL:460V) + CAPPRE:ULCUL + CAPPRM:ASME + FREQ:60HZ)	
	Electrical legend:	Relative Humidity sensor			

Legend:

CAPPRE:IEC - Component approval electrical:IEC
CAPPRM:ASME - Component approval mechanical:ASME
CAPPRM:MOM - Component approval mechanical:MOM
FREQ:50HZ - Frequency:50 Hz
MODEL:GA110VP_16 - Model:GA 110VSD+
MOVOL:400V - Supply voltage:400 V
MOVOL:575V - Supply voltage:575 V
CAPPRE:ULCUL - Component approval electrical:UL/cUL
CAPPRM:CE - Component approval mechanical:CE
COOL:AIR - Cooling:Air cooled
FREQ:60HZ - Frequency:60 Hz
MOVOL:200V - Supply voltage:200 V
MOVOL:460V - Supply voltage:460 V
CAPPRM:AS1210 - Component approval mechanical:AS1210
CAPPRM:MHLW - Component approval mechanical:MHLW
COOL:WATER - Cooling:Water cooled
IDRY:Y - Integrated dryer:Yes
MOVOL:230V - Supply voltage:230 V
MOVOL:500V - Supply voltage:500 V

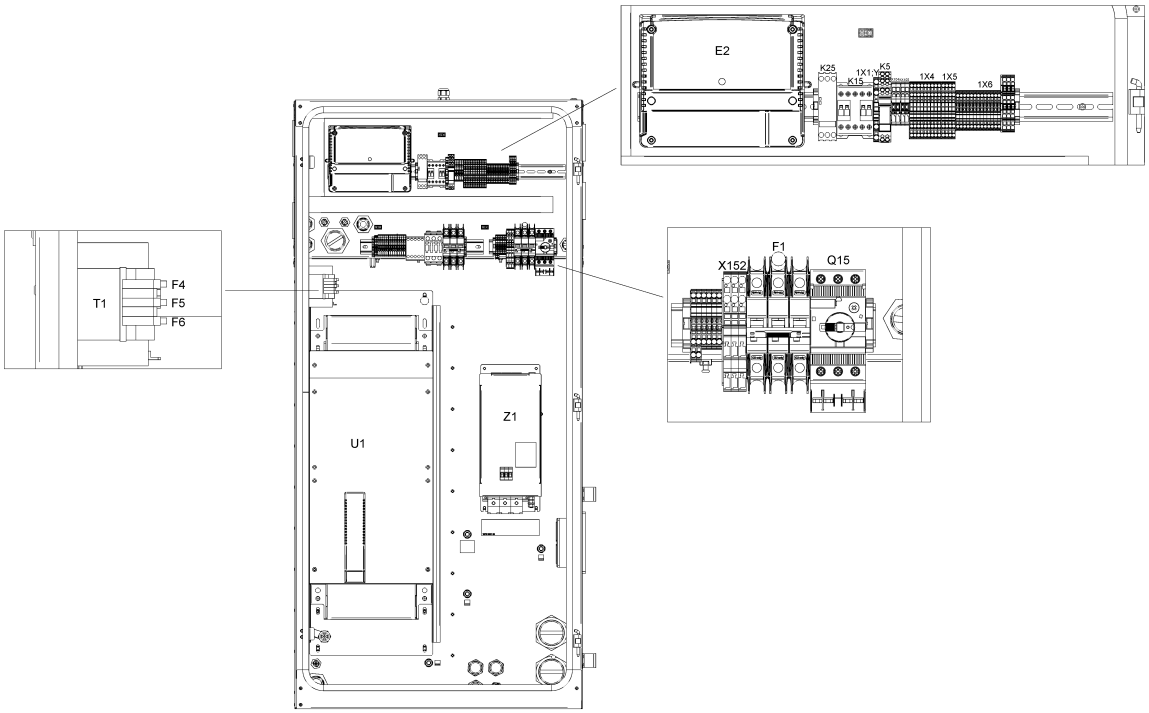
E2
K25
K15
1X1
K5
1X4
1X5
1X6
T1
F4
F5
F6
X152
F1
Q15
U1
Z1

21.28 - Cubicle components GA 110 VSD+ - (200V-400V-500V/50Hz, 460V/60Hz - IEC, 230V-460V-575V/60Hz - UL-cUL) - Full-Feature (05/02/2020 - ...)

(((MOVOL:200V , MOVOL:400V , MOVOL:500V) + FREQ:50HZ , FREQ:60HZ + MOVOL:460V) + CAPPRE:IEC , (MOVOL:230V , MOVOL:460V , MOVOL:575V) + CAPPRE:ULCUL + FREQ:60HZ) + IDRY:Y + MODEL:GA110VP_16

Ref	Part Number	Qty	Name	Validity	EL
	1649 8001 43	3	MOTOR CABLE	**(25/02/2019 - 04/02/2020)** (((CAPPRM:AS1210 , CAPPRM:CE , CAPPRM:MHLW , CAPPRM:MOM) + FREQ:50HZ + MOVOL:400V , (CAPPRM:ASME , CAPPRM:MHLW) + FREQ:60HZ + MOVOL:460V) + CAPPRE:IEC , CAPPRE:ULCUL + CAPPRM:ASME + FREQ:60HZ + MOVOL:460V) + COOL:WATER **(05/02/2020 - ...)** ((((CAPPRM:AS1210 , CAPPRM:CE , CAPPRM:MHLW , CAPPRM:MOM) + MOVOL:400V , CAPPRM:CE + COOL:AIR + MOVOL:500V) + FREQ:50HZ , (CAPPRM:ASME , CAPPRM:MHLW) + FREQ:60HZ + MOVOL:460V) + CAPPRE:IEC , (COOL:AIR + MOVOL:575V , MOVOL:460V) + CAPPRE:ULCUL + CAPPRM:ASME + FREQ:60HZ)	
	Electrical legend:	Motor conduit			
	1649 8001 46	1	MOTOR CABLE	**(25/02/2019 - 04/02/2020)** (((CAPPRM:AS1210 , CAPPRM:CE , CAPPRM:MHLW , CAPPRM:MOM) + FREQ:50HZ + MOVOL:400V , (CAPPRM:ASME , CAPPRM:MHLW) + FREQ:60HZ + MOVOL:460V) + CAPPRE:IEC , CAPPRE:ULCUL + CAPPRM:ASME + FREQ:60HZ + MOVOL:460V) + COOL:WATER **(05/02/2020 - ...)** ((((CAPPRM:AS1210 , CAPPRM:CE , CAPPRM:MHLW , CAPPRM:MOM) + MOVOL:400V , CAPPRM:CE + COOL:AIR + MOVOL:500V) + FREQ:50HZ , (CAPPRM:ASME , CAPPRM:MHLW) + FREQ:60HZ + MOVOL:460V) + CAPPRE:IEC , (COOL:AIR + MOVOL:575V , MOVOL:460V) + CAPPRE:ULCUL + CAPPRM:ASME + FREQ:60HZ)	
	Electrical legend:	Motor conduit			
	1625 3906 31	1	DATA LABEL	**(25/02/2019 - 04/02/2020)** (((CAPPRM:AS1210 , CAPPRM:CE , CAPPRM:MHLW , CAPPRM:MOM) + FREQ:50HZ + MOVOL:400V , (CAPPRM:ASME , CAPPRM:MHLW) + FREQ:60HZ + MOVOL:460V) + CAPPRE:IEC , CAPPRE:ULCUL + CAPPRM:ASME + FREQ:60HZ + MOVOL:460V) + COOL:WATER **(05/02/2020 - ...)** ((((CAPPRM:AS1210 , CAPPRM:CE , CAPPRM:MHLW , CAPPRM:MOM) + MOVOL:400V , CAPPRM:CE + COOL:AIR + MOVOL:500V) + FREQ:50HZ , (CAPPRM:ASME , CAPPRM:MHLW) + FREQ:60HZ + MOVOL:460V) + CAPPRE:IEC , (COOL:AIR + MOVOL:575V , MOVOL:460V) + CAPPRE:ULCUL + CAPPRM:ASME + FREQ:60HZ)	Label
	1079 9901 68	1	WARNING LABEL	**(25/02/2019 - 04/02/2020)** (((CAPPRM:AS1210 , CAPPRM:CE , CAPPRM:MHLW , CAPPRM:MOM) + FREQ:50HZ + MOVOL:400V , (CAPPRM:ASME , CAPPRM:MHLW) + FREQ:60HZ + MOVOL:460V) + CAPPRE:IEC , CAPPRE:ULCUL + CAPPRM:ASME + FREQ:60HZ + MOVOL:460V) + COOL:WATER **(05/02/2020 - ...)** ((((CAPPRM:AS1210 , CAPPRM:CE , CAPPRM:MHLW , CAPPRM:MOM) + MOVOL:400V , CAPPRM:CE + COOL:AIR + MOVOL:500V) + FREQ:50HZ , (CAPPRM:ASME , CAPPRM:MHLW) + FREQ:60HZ + MOVOL:460V) + CAPPRE:IEC , (COOL:AIR + MOVOL:575V , MOVOL:460V) + CAPPRE:ULCUL + CAPPRM:ASME + FREQ:60HZ)	Label

Legend:

CAPPRE:IEC - Component approval electrical:IEC
CAPPRM:ASME - Component approval mechanical:ASME
CAPPRM:MOM - Component approval mechanical:MOM
FREQ:50HZ - Frequency:50 Hz
MODEL:GA110VP_16 - Model:GA 110VSD+
MOVOL:400V - Supply voltage:400 V
MOVOL:575V - Supply voltage:575 V
CAPPRE:ULCUL - Component approval electrical:UL/cUL
CAPPRM:CE - Component approval mechanical:CE
COOL:AIR - Cooling:Air cooled
FREQ:60HZ - Frequency:60 Hz
MOVOL:200V - Supply voltage:200 V
MOVOL:460V - Supply voltage:460 V
CAPPRM:AS1210 - Component approval mechanical:AS1210
CAPPRM:MHLW - Component approval mechanical:MHLW
COOL:WATER - Cooling:Water cooled
IDRY:Y - Integrated dryer:Yes
MOVOL:230V - Supply voltage:230 V
MOVOL:500V - Supply voltage:500 V

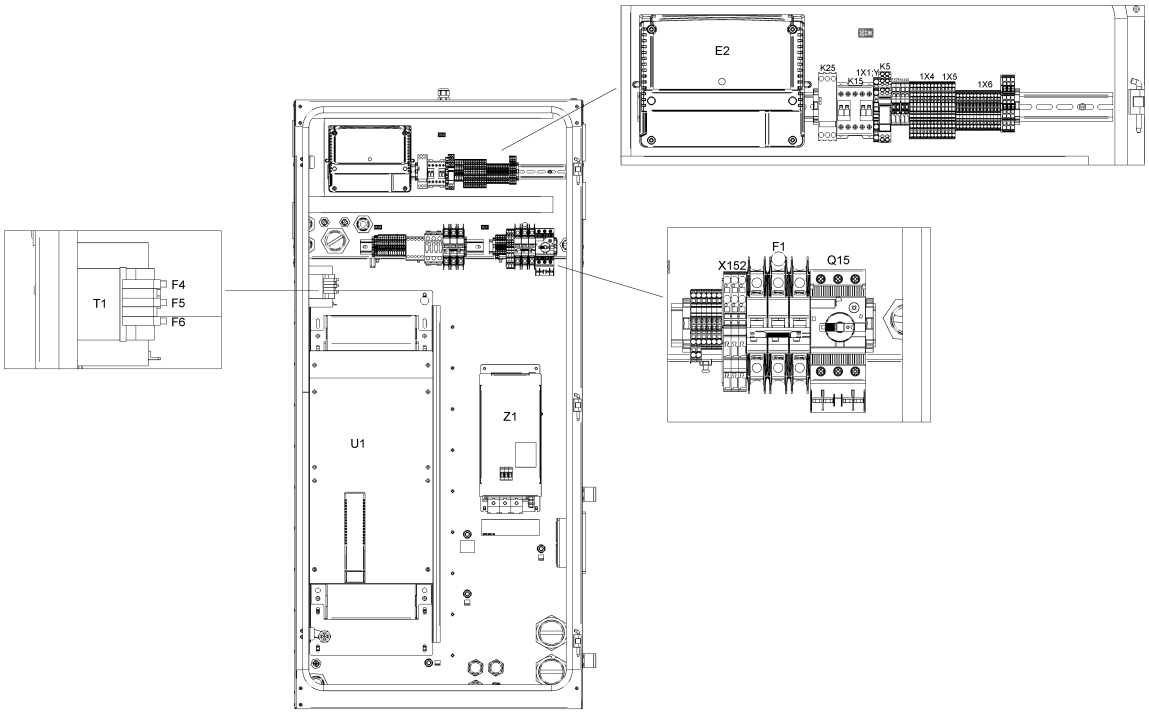
E2
K25
K15
1X1
K5
1X4
1X5
1X6
T1
F4
F5
F6
X152
F1
Q15
U1
Z1

21.28 - Cubicle components GA 110 VSD+ - (200V-400V-500V/50Hz, 460V/60Hz - IEC, 230V-460V-575V/60Hz - UL-cUL) - Full-Feature (05/02/2020 - ...)

(((MOVOL:200V , MOVOL:400V , MOVOL:500V) + FREQ:50HZ , FREQ:60HZ + MOVOL:460V) + CAPPRE:IEC , (MOVOL:230V , MOVOL:460V , MOVOL:575V) + CAPPRE:ULCUL + FREQ:60HZ) + IDRY:Y + MODEL:GA110VP_16

Ref	Part Number	Qty	Name	Validity	EL
	1649 8005 00	0	LABEL	**(25/02/2019 - 04/02/2020)** (((CAPPRM:AS1210 , CAPPRM:CE , CAPPRM:MHLW , CAPPRM:MOM) + FREQ:50HZ + MOVOL:400V , (CAPPRM:ASME , CAPPRM:MHLW) + FREQ:60HZ + MOVOL:460V) + CAPPRE:IEC , CAPPRE:ULCUL + CAPPRM:ASME + FREQ:60HZ + MOVOL:460V) + COOL:WATER **(05/02/2020 - ...)** ((((CAPPRM:AS1210 , CAPPRM:CE , CAPPRM:MHLW , CAPPRM:MOM) + MOVOL:400V , CAPPRM:CE + COOL:AIR + MOVOL:500V) + FREQ:50HZ , (CAPPRM:ASME , CAPPRM:MHLW) + FREQ:60HZ + MOVOL:460V) + CAPPRE:IEC , (COOL:AIR + MOVOL:575V , MOVOL:460V) + CAPPRE:ULCUL + CAPPRM:ASME + FREQ:60HZ)	Label
	1900 5350 18	1	INVERTER	**(25/02/2019 - 04/02/2020)** (((CAPPRM:AS1210 , CAPPRM:CE , CAPPRM:MHLW , CAPPRM:MOM) + FREQ:50HZ + MOVOL:400V , (CAPPRM:ASME , CAPPRM:MHLW) + FREQ:60HZ + MOVOL:460V) + CAPPRE:IEC , CAPPRE:ULCUL + CAPPRM:ASME + FREQ:60HZ + MOVOL:460V) + COOL:WATER **(05/02/2020 - ...)** ((((CAPPRM:AS1210 , CAPPRM:CE , CAPPRM:MHLW , CAPPRM:MOM) + MOVOL:400V , CAPPRM:CE + COOL:AIR + MOVOL:500V) + FREQ:50HZ , (CAPPRM:ASME , CAPPRM:MHLW) + FREQ:60HZ + MOVOL:460V) + CAPPRE:IEC , (COOL:AIR + MOVOL:575V , MOVOL:460V) + CAPPRE:ULCUL + CAPPRM:ASME + FREQ:60HZ)	U1
	1631 2079 00	1	NANOPERMRING	**(25/02/2019 - 04/02/2020)** (((CAPPRM:AS1210 , CAPPRM:CE , CAPPRM:MHLW , CAPPRM:MOM) + FREQ:50HZ + MOVOL:400V , (CAPPRM:ASME , CAPPRM:MHLW) + FREQ:60HZ + MOVOL:460V) + CAPPRE:IEC , CAPPRE:ULCUL + CAPPRM:ASME + FREQ:60HZ + MOVOL:460V) + COOL:WATER **(05/02/2020 - ...)** ((((CAPPRM:AS1210 , CAPPRM:CE , CAPPRM:MHLW , CAPPRM:MOM) + MOVOL:400V , CAPPRM:CE + COOL:AIR + MOVOL:500V) + FREQ:50HZ , (CAPPRM:ASME , CAPPRM:MHLW) + FREQ:60HZ + MOVOL:460V) + CAPPRE:IEC , (COOL:AIR + MOVOL:575V , MOVOL:460V) + CAPPRE:ULCUL + CAPPRM:ASME + FREQ:60HZ)	
	Electrical legend:	Nanoperm ring			
	0697 9811 17	2	PLUG	**(25/02/2019 - 04/02/2020)** (((CAPPRM:AS1210 , CAPPRM:CE , CAPPRM:MHLW , CAPPRM:MOM) + FREQ:50HZ + MOVOL:400V , (CAPPRM:ASME , CAPPRM:MHLW) + FREQ:60HZ + MOVOL:460V) + CAPPRE:IEC , CAPPRE:ULCUL + CAPPRM:ASME + FREQ:60HZ + MOVOL:460V) + COOL:WATER **(05/02/2020 - ...)** ((((CAPPRM:AS1210 , CAPPRM:CE , CAPPRM:MHLW , CAPPRM:MOM) + MOVOL:400V , CAPPRM:CE + COOL:AIR + MOVOL:500V) + FREQ:50HZ , (CAPPRM:ASME , CAPPRM:MHLW) + FREQ:60HZ + MOVOL:460V) + CAPPRE:IEC , (COOL:AIR + MOVOL:575V , MOVOL:460V) + CAPPRE:ULCUL + CAPPRM:ASME + FREQ:60HZ)	
	Electrical legend:	Plug for transfo supply			

Legend:

CAPPRE:IEC - Component approval electrical:IEC
CAPPRM:ASME - Component approval mechanical:ASME
CAPPRM:MOM - Component approval mechanical:MOM
FREQ:50HZ - Frequency:50 Hz
MODEL:GA110VP_16 - Model:GA 110VSD+
MOVOL:400V - Supply voltage:400 V
MOVOL:575V - Supply voltage:575 V
CAPPRE:ULCUL - Component approval electrical:UL/cUL
CAPPRM:CE - Component approval mechanical:CE
COOL:AIR - Cooling:Air cooled
FREQ:60HZ - Frequency:60 Hz
MOVOL:200V - Supply voltage:200 V
MOVOL:460V - Supply voltage:460 V
CAPPRM:AS1210 - Component approval mechanical:AS1210
CAPPRM:MHLW - Component approval mechanical:MHLW
COOL:WATER - Cooling:Water cooled
IDRY:Y - Integrated dryer:Yes
MOVOL:230V - Supply voltage:230 V
MOVOL:500V - Supply voltage:500 V

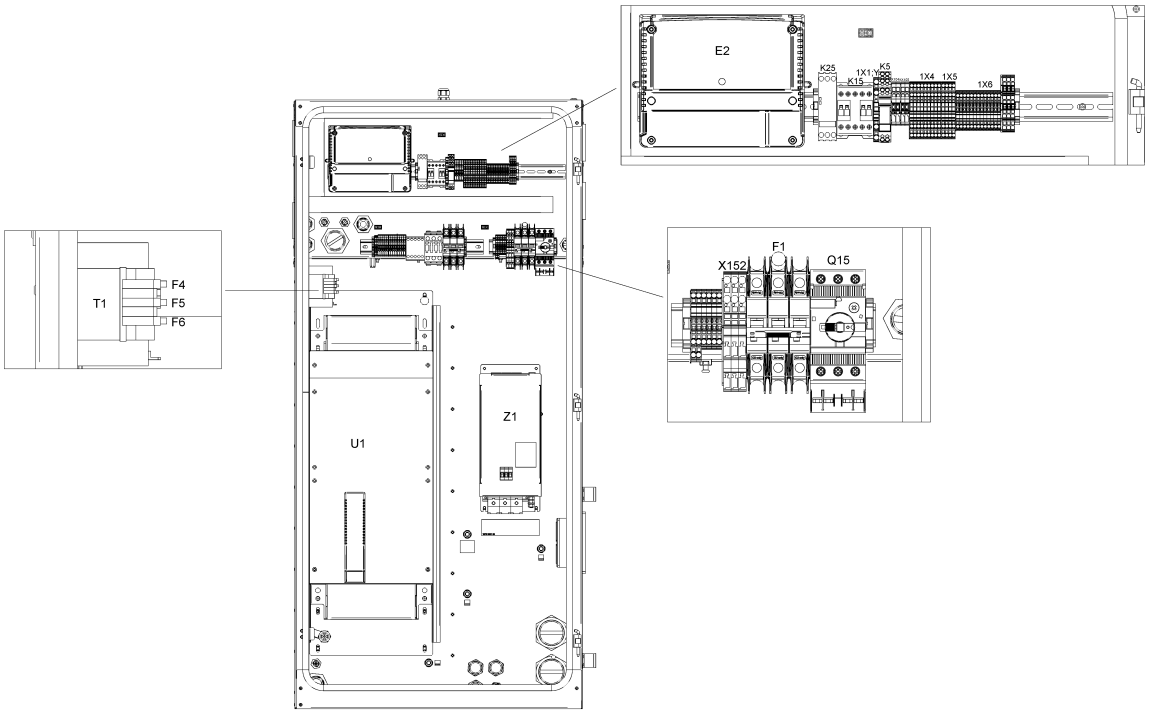
E2
K25
K15
1X1
K5
1X4
1X5
1X6
T1
F4
F5
F6
X152
F1
Q15
U1
Z1

21.28 - Cubicle components GA 110 VSD+ - (200V-400V-500V/50Hz, 460V/60Hz - IEC, 230V-460V-575V/60Hz - UL-cUL) - Full-Feature (05/02/2020 - ...)

(((MOVOL:200V , MOVOL:400V , MOVOL:500V) + FREQ:50HZ , FREQ:60HZ + MOVOL:460V) + CAPPRE:IEC , (MOVOL:230V , MOVOL:460V , MOVOL:575V) + CAPPRE:ULCUL + FREQ:60HZ) + IDRY:Y + MODEL:GA110VP_16

Ref	Part Number	Qty	Name	Validity	EL
	0989 3700 48	2	NUT	**(25/02/2019 - 04/02/2020)** (((CAPPRM:AS1210 , CAPPRM:CE , CAPPRM:MHLW , CAPPRM:MOM) + FREQ:50HZ + MOVOL:400V , (CAPPRM:ASME , CAPPRM:MHLW) + FREQ:60HZ + MOVOL:460V) + CAPPRE:IEC , CAPPRE:ULCUL + CAPPRM:ASME + FREQ:60HZ + MOVOL:460V) + COOL:WATER **(05/02/2020 - ...)** ((((CAPPRM:AS1210 , CAPPRM:CE , CAPPRM:MHLW , CAPPRM:MOM) + MOVOL:400V , CAPPRM:CE + COOL:AIR + MOVOL:500V) + FREQ:50HZ , (CAPPRM:ASME , CAPPRM:MHLW) + FREQ:60HZ + MOVOL:460V) + CAPPRE:IEC , (COOL:AIR + MOVOL:575V , MOVOL:460V) + CAPPRE:ULCUL + CAPPRM:ASME + FREQ:60HZ)	
	Electrical legend:	Nut for transfo supply			
	0698 5140 72	1	CABLE GLAND	**(25/02/2019 - 04/02/2020)** (((CAPPRM:AS1210 , CAPPRM:CE , CAPPRM:MHLW , CAPPRM:MOM) + FREQ:50HZ + MOVOL:400V , (CAPPRM:ASME , CAPPRM:MHLW) + FREQ:60HZ + MOVOL:460V) + CAPPRE:IEC , CAPPRE:ULCUL + CAPPRM:ASME + FREQ:60HZ + MOVOL:460V) + COOL:WATER **(05/02/2020 - ...)** ((((CAPPRM:AS1210 , CAPPRM:CE , CAPPRM:MHLW , CAPPRM:MOM) + MOVOL:400V , CAPPRM:CE + COOL:AIR + MOVOL:500V) + FREQ:50HZ , (CAPPRM:ASME , CAPPRM:MHLW) + FREQ:60HZ + MOVOL:460V) + CAPPRE:IEC , (COOL:AIR + MOVOL:575V , MOVOL:460V) + CAPPRE:ULCUL + CAPPRM:ASME + FREQ:60HZ)	Fan
	0698 5140 71	1	CABLE GLAND	**(25/02/2019 - 04/02/2020)** (((CAPPRM:AS1210 , CAPPRM:CE , CAPPRM:MHLW , CAPPRM:MOM) + FREQ:50HZ + MOVOL:400V , (CAPPRM:ASME , CAPPRM:MHLW) + FREQ:60HZ + MOVOL:460V) + CAPPRE:IEC , CAPPRE:ULCUL + CAPPRM:ASME + FREQ:60HZ + MOVOL:460V) + COOL:WATER **(05/02/2020 - ...)** ((((CAPPRM:AS1210 , CAPPRM:CE , CAPPRM:MHLW , CAPPRM:MOM) + MOVOL:400V , CAPPRM:CE + COOL:AIR + MOVOL:500V) + FREQ:50HZ , (CAPPRM:ASME , CAPPRM:MHLW) + FREQ:60HZ + MOVOL:460V) + CAPPRE:IEC , (COOL:AIR + MOVOL:575V , MOVOL:460V) + CAPPRE:ULCUL + CAPPRM:ASME + FREQ:60HZ)	
	Electrical legend:	Ambient sensor			
	0697 9809 20	1	LOCKNUT	**(25/02/2019 - 04/02/2020)** (((CAPPRM:AS1210 , CAPPRM:CE , CAPPRM:MHLW , CAPPRM:MOM) + FREQ:50HZ + MOVOL:400V , (CAPPRM:ASME , CAPPRM:MHLW) + FREQ:60HZ + MOVOL:460V) + CAPPRE:IEC , CAPPRE:ULCUL + CAPPRM:ASME + FREQ:60HZ + MOVOL:460V) + COOL:WATER **(05/02/2020 - ...)** ((((CAPPRM:AS1210 , CAPPRM:CE , CAPPRM:MHLW , CAPPRM:MOM) + MOVOL:400V , CAPPRM:CE + COOL:AIR + MOVOL:500V) + FREQ:50HZ , (CAPPRM:ASME , CAPPRM:MHLW) + FREQ:60HZ + MOVOL:460V) + CAPPRE:IEC , (COOL:AIR + MOVOL:575V , MOVOL:460V) + CAPPRE:ULCUL + CAPPRM:ASME + FREQ:60HZ)	
	Electrical legend:	Ambient sensor			

Legend:

CAPPRE:IEC - Component approval electrical:IEC
CAPPRM:ASME - Component approval mechanical:ASME
CAPPRM:MOM - Component approval mechanical:MOM
FREQ:50HZ - Frequency:50 Hz
MODEL:GA110VP_16 - Model:GA 110VSD+
MOVOL:400V - Supply voltage:400 V
MOVOL:575V - Supply voltage:575 V
CAPPRE:ULCUL - Component approval electrical:UL/cUL
CAPPRM:CE - Component approval mechanical:CE
COOL:AIR - Cooling:Air cooled
FREQ:60HZ - Frequency:60 Hz
MOVOL:200V - Supply voltage:200 V
MOVOL:460V - Supply voltage:460 V
CAPPRM:AS1210 - Component approval mechanical:AS1210
CAPPRM:MHLW - Component approval mechanical:MHLW
COOL:WATER - Cooling:Water cooled
IDRY:Y - Integrated dryer:Yes
MOVOL:230V - Supply voltage:230 V
MOVOL:500V - Supply voltage:500 V

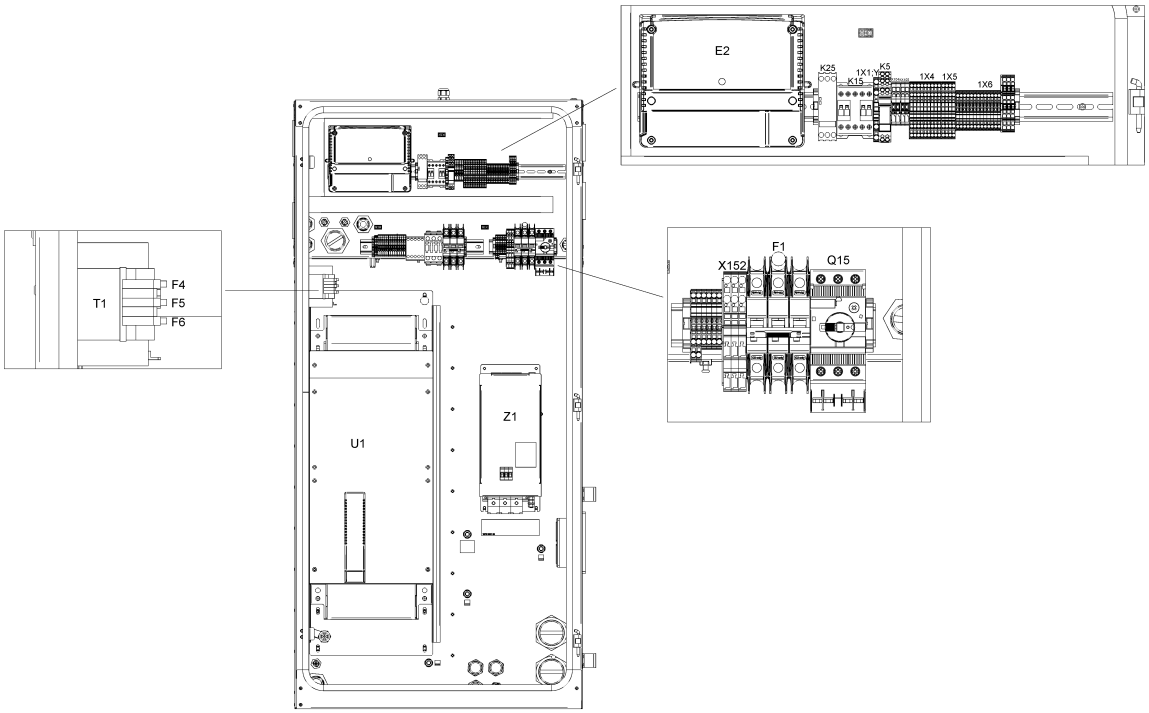
E2
K25
K15
1X1
K5
1X4
1X5
1X6
T1
F4
F5
F6
X152
F1
Q15
U1
Z1

21.28 - Cubicle components GA 110 VSD+ - (200V-400V-500V/50Hz, 460V/60Hz - IEC, 230V-460V-575V/60Hz - UL-cUL) - Full-Feature (05/02/2020 - ...)

(((MOVOL:200V , MOVOL:400V , MOVOL:500V) + FREQ:50HZ , FREQ:60HZ + MOVOL:460V) + CAPPRE:IEC , (MOVOL:230V , MOVOL:460V , MOVOL:575V) + CAPPRE:ULCUL + FREQ:60HZ) + IDRY:Y + MODEL:GA110VP_16

Ref	Part Number	Qty	Name	Validity	EL
	1089 9556 44	1	FAN WITH FILTER	**(25/02/2019 - 04/02/2020)** (((CAPPRM:AS1210 , CAPPRM:CE , CAPPRM:MHLW , CAPPRM:MOM) + FREQ:50HZ + MOVOL:400V , (CAPPRM:ASME , CAPPRM:MHLW) + FREQ:60HZ + MOVOL:460V) + CAPPRE:IEC , CAPPRE:ULCUL + CAPPRM:ASME + FREQ:60HZ + MOVOL:460V) + COOL:WATER **(05/02/2020 - ...)** ((((CAPPRM:AS1210 , CAPPRM:CE , CAPPRM:MHLW , CAPPRM:MOM) + MOVOL:400V , CAPPRM:CE + COOL:AIR + MOVOL:500V) + FREQ:50HZ , (CAPPRM:ASME , CAPPRM:MHLW) + FREQ:60HZ + MOVOL:460V) + CAPPRE:IEC , (COOL:AIR + MOVOL:575V , MOVOL:460V) + CAPPRE:ULCUL + CAPPRM:ASME + FREQ:60HZ)	Cubicle fan
	1089 9556 72	4	AIR INLET WITHOUT FILTER	**(25/02/2019 - 04/02/2020)** (((CAPPRM:AS1210 , CAPPRM:CE , CAPPRM:MHLW , CAPPRM:MOM) + FREQ:50HZ + MOVOL:400V , (CAPPRM:ASME , CAPPRM:MHLW) + FREQ:60HZ + MOVOL:460V) + CAPPRE:IEC , CAPPRE:ULCUL + CAPPRM:ASME + FREQ:60HZ + MOVOL:460V) + COOL:WATER **(05/02/2020 - ...)** ((((CAPPRM:AS1210 , CAPPRM:CE , CAPPRM:MHLW , CAPPRM:MOM) + MOVOL:400V , CAPPRM:CE + COOL:AIR + MOVOL:500V) + FREQ:50HZ , (CAPPRM:ASME , CAPPRM:MHLW) + FREQ:60HZ + MOVOL:460V) + CAPPRE:IEC , (COOL:AIR + MOVOL:575V , MOVOL:460V) + CAPPRE:ULCUL + CAPPRM:ASME + FREQ:60HZ)	Filter grid
	1088 0032 09	1	CONNECTOR	**(25/02/2019 - 04/02/2020)** (((CAPPRM:AS1210 , CAPPRM:CE , CAPPRM:MHLW , CAPPRM:MOM) + FREQ:50HZ + MOVOL:400V , (CAPPRM:ASME , CAPPRM:MHLW) + FREQ:60HZ + MOVOL:460V) + CAPPRE:IEC , CAPPRE:ULCUL + CAPPRM:ASME + FREQ:60HZ + MOVOL:460V) + COOL:WATER **(05/02/2020 - ...)** ((((CAPPRM:AS1210 , CAPPRM:CE , CAPPRM:MHLW , CAPPRM:MOM) + MOVOL:400V , CAPPRM:CE + COOL:AIR + MOVOL:500V) + FREQ:50HZ , (CAPPRM:ASME , CAPPRM:MHLW) + FREQ:60HZ + MOVOL:460V) + CAPPRE:IEC , (COOL:AIR + MOVOL:575V , MOVOL:460V) + CAPPRE:ULCUL + CAPPRM:ASME + FREQ:60HZ)	X3
	1089 9572 04	1	LINE FILTER	**(25/02/2019 - 04/02/2020)** (((CAPPRM:AS1210 , CAPPRM:CE , CAPPRM:MHLW , CAPPRM:MOM) + FREQ:50HZ + MOVOL:400V , (CAPPRM:ASME , CAPPRM:MHLW) + FREQ:60HZ + MOVOL:460V) + CAPPRE:IEC , CAPPRE:ULCUL + CAPPRM:ASME + FREQ:60HZ + MOVOL:460V) + COOL:WATER **(05/02/2020 - ...)** ((((CAPPRM:AS1210 , CAPPRM:CE , CAPPRM:MHLW , CAPPRM:MOM) + MOVOL:400V , CAPPRM:CE + COOL:AIR + MOVOL:500V) + FREQ:50HZ , (CAPPRM:ASME , CAPPRM:MHLW) + FREQ:60HZ + MOVOL:460V) + CAPPRE:IEC , (COOL:AIR + MOVOL:575V , MOVOL:460V) + CAPPRE:ULCUL + CAPPRM:ASME + FREQ:60HZ)	Z1 for 110kw

Electrical legend: Z1 for 110kw

Legend:

CAPPRE:IEC - Component approval electrical:IEC
CAPPRM:ASME - Component approval mechanical:ASME
CAPPRM:MOM - Component approval mechanical:MOM
FREQ:50HZ - Frequency:50 Hz
MODEL:GA110VP_16 - Model:GA 110VSD+
MOVOL:400V - Supply voltage:400 V
MOVOL:575V - Supply voltage:575 V
CAPPRE:ULCUL - Component approval electrical:UL/cUL
CAPPRM:CE - Component approval mechanical:CE
COOL:AIR - Cooling:Air cooled
FREQ:60HZ - Frequency:60 Hz
MOVOL:200V - Supply voltage:200 V
MOVOL:460V - Supply voltage:460 V
CAPPRM:AS1210 - Component approval mechanical:AS1210
CAPPRM:MHLW - Component approval mechanical:MHLW
COOL:WATER - Cooling:Water cooled
IDRY:Y - Integrated dryer:Yes
MOVOL:230V - Supply voltage:230 V
MOVOL:500V - Supply voltage:500 V

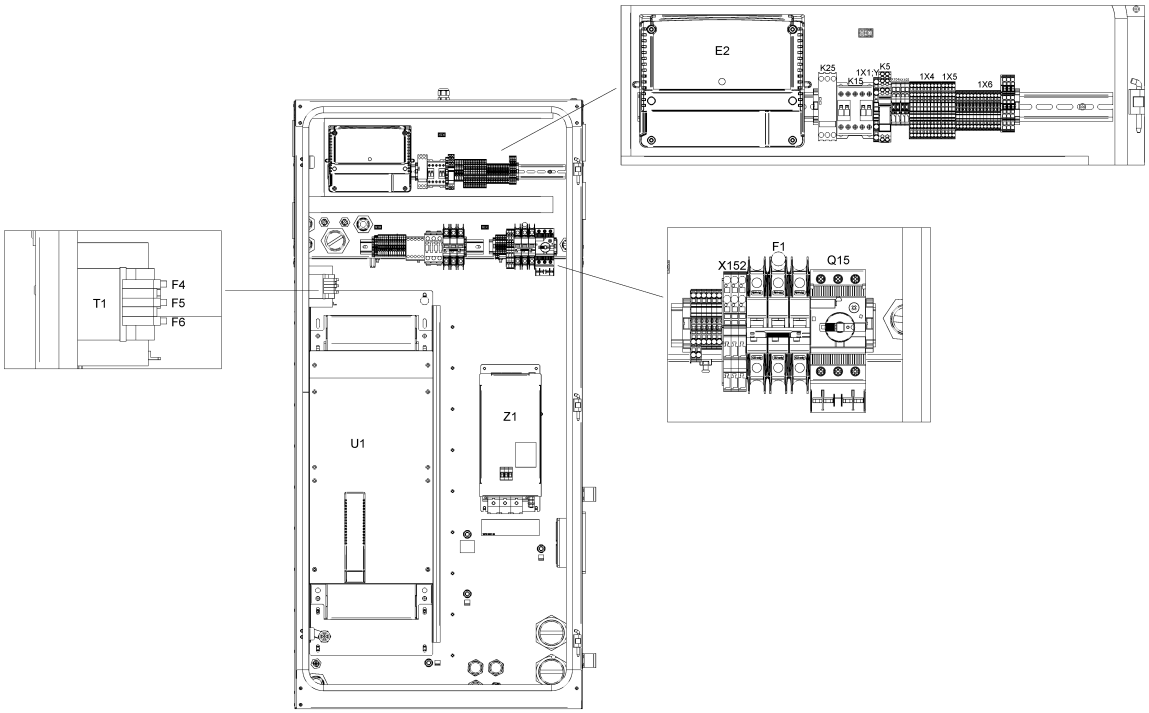
E2
K25
K15
1X1
K5
1X4
1X5
1X6
T1
F4
F5
F6
X152
F1
Q15
U1
Z1

21.28 - Cubicle components GA 110 VSD+ - (200V-400V-500V/50Hz, 460V/60Hz - IEC, 230V-460V-575V/60Hz - UL-cUL) - Full-Feature (05/02/2020 - ...)

(((MOVOL:200V , MOVOL:400V , MOVOL:500V) + FREQ:50HZ , FREQ:60HZ + MOVOL:460V) + CAPPRE:IEC , (MOVOL:230V , MOVOL:460V , MOVOL:575V) + CAPPRE:ULCUL + FREQ:60HZ) + IDRY:Y + MODEL:GA110VP_16

Ref	Part Number	Qty	Name	Validity	EL
	1089 9562 04	1	STRAP	**(25/02/2019 - 04/02/2020)** (((CAPPRM:AS1210 , CAPPRM:CE , CAPPRM:MHLW , CAPPRM:MOM) + FREQ:50HZ + MOVOL:400V , (CAPPRM:ASME , CAPPRM:MHLW) + FREQ:60HZ + MOVOL:460V) + CAPPRE:IEC , CAPPRE:ULCUL + CAPPRM:ASME + FREQ:60HZ + MOVOL:460V) + COOL:WATER **(05/02/2020 - ...)** ((((CAPPRM:AS1210 , CAPPRM:CE , CAPPRM:MHLW , CAPPRM:MOM) + MOVOL:400V , CAPPRM:CE + COOL:AIR + MOVOL:500V) + FREQ:50HZ , (CAPPRM:ASME , CAPPRM:MHLW) + FREQ:60HZ + MOVOL:460V) + CAPPRE:IEC , (COOL:AIR + MOVOL:575V , MOVOL:460V) + CAPPRE:ULCUL + CAPPRM:ASME + FREQ:60HZ)	HF-screen
	1089 9514 56	1	TRANSFORMER	**(25/02/2019 - 04/02/2020)** (((CAPPRM:AS1210 , CAPPRM:CE , CAPPRM:MHLW , CAPPRM:MOM) + FREQ:50HZ + MOVOL:400V , (CAPPRM:ASME , CAPPRM:MHLW) + FREQ:60HZ + MOVOL:460V) + CAPPRE:IEC , CAPPRE:ULCUL + CAPPRM:ASME + FREQ:60HZ + MOVOL:460V) + COOL:WATER **(05/02/2020 - ...)** ((((CAPPRM:AS1210 , CAPPRM:CE , CAPPRM:MHLW , CAPPRM:MOM) + MOVOL:400V , CAPPRM:CE + COOL:AIR + MOVOL:500V) + FREQ:50HZ , (CAPPRM:ASME , CAPPRM:MHLW) + FREQ:60HZ + MOVOL:460V) + CAPPRE:IEC , (COOL:AIR + MOVOL:575V , MOVOL:460V) + CAPPRE:ULCUL + CAPPRM:ASME + FREQ:60HZ)	T1
	1089 9522 26	1	CIRCUIT BREAKER	**(25/02/2019 - 04/02/2020)** (((CAPPRM:AS1210 , CAPPRM:CE , CAPPRM:MHLW , CAPPRM:MOM) + FREQ:50HZ + MOVOL:400V , (CAPPRM:ASME , CAPPRM:MHLW) + FREQ:60HZ + MOVOL:460V) + CAPPRE:IEC , CAPPRE:ULCUL + CAPPRM:ASME + FREQ:60HZ + MOVOL:460V) + COOL:WATER **(05/02/2020 - ...)** ((((CAPPRM:AS1210 , CAPPRM:CE , CAPPRM:MHLW , CAPPRM:MOM) + MOVOL:400V , CAPPRM:CE + COOL:AIR + MOVOL:500V) + FREQ:50HZ , (CAPPRM:ASME , CAPPRM:MHLW) + FREQ:60HZ + MOVOL:460V) + CAPPRE:IEC , (COOL:AIR + MOVOL:575V , MOVOL:460V) + CAPPRE:ULCUL + CAPPRM:ASME + FREQ:60HZ)	F1
	1089 9513 41	1	PUSH BUTTON	**(25/02/2019 - 04/02/2020)** (((CAPPRM:AS1210 , CAPPRM:CE , CAPPRM:MHLW , CAPPRM:MOM) + FREQ:50HZ + MOVOL:400V , (CAPPRM:ASME , CAPPRM:MHLW) + FREQ:60HZ + MOVOL:460V) + CAPPRE:IEC , CAPPRE:ULCUL + CAPPRM:ASME + FREQ:60HZ + MOVOL:460V) + COOL:WATER **(05/02/2020 - ...)** ((((CAPPRM:AS1210 , CAPPRM:CE , CAPPRM:MHLW , CAPPRM:MOM) + MOVOL:400V , CAPPRM:CE + COOL:AIR + MOVOL:500V) + FREQ:50HZ , (CAPPRM:ASME , CAPPRM:MHLW) + FREQ:60HZ + MOVOL:460V) + CAPPRE:IEC , (COOL:AIR + MOVOL:575V , MOVOL:460V) + CAPPRE:ULCUL + CAPPRM:ASME + FREQ:60HZ)	S3

Legend:

CAPPRE:IEC - Component approval electrical:IEC
CAPPRE:ULCUL - Component approval electrical:UL/cUL
CAPPRM:AS1210 - Component approval mechanical:AS1210
CAPPRM:ASME - Component approval mechanical:ASME
CAPPRM:CE - Component approval mechanical:CE
CAPPRM:MHLW - Component approval mechanical:MHLW
CAPPRM:MOM - Component approval mechanical:MOM
COOL:AIR - Cooling:Air cooled
COOL:WATER - Cooling:Water cooled
FREQ:50HZ - Frequency:50 Hz
FREQ:60HZ - Frequency:60 Hz
IDRY:Y - Integrated dryer:Yes
MODEL:GA110VP_16 - Model:GA 110VSD+
MOVOL:200V - Supply voltage:200 V
MOVOL:230V - Supply voltage:230 V
MOVOL:400V - Supply voltage:400 V
MOVOL:460V - Supply voltage:460 V
MOVOL:500V - Supply voltage:500 V
MOVOL:575V - Supply voltage:575 V

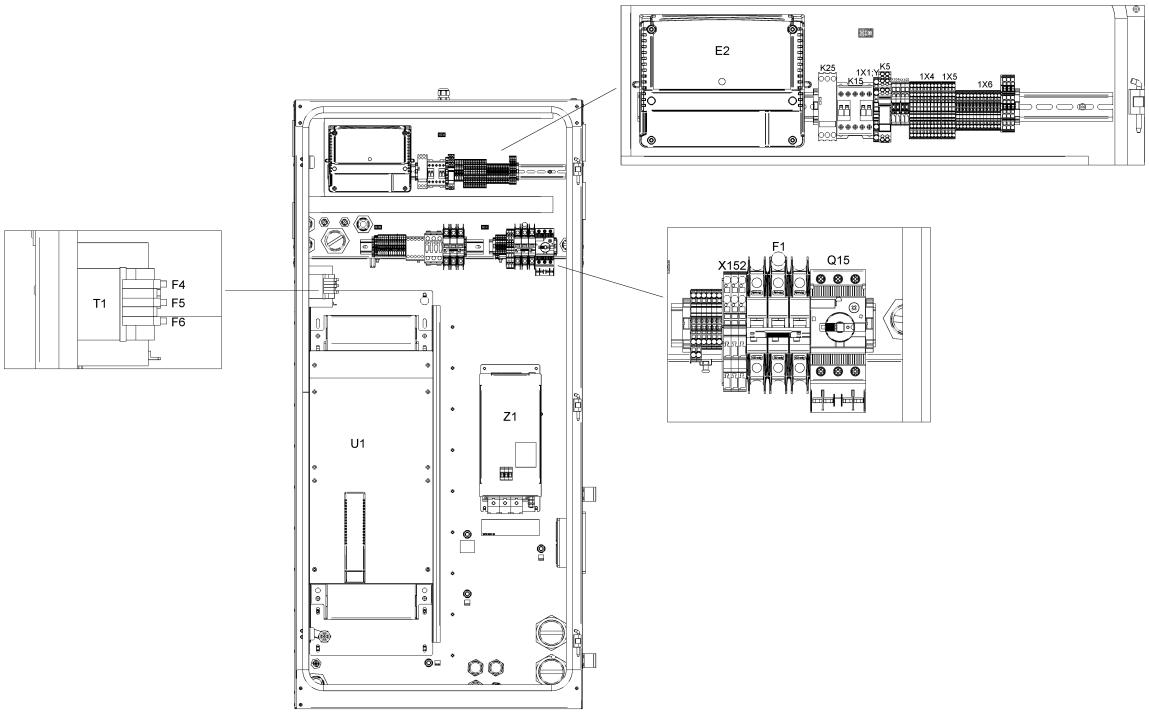
E2
K25
K15
1X1
K5
1X4
1X5
1X6
T1
F4
F5
F6
X152
F1
Q15
U1
Z1

21.28 - Cubicle components GA 110 VSD+ - (200V-400V-500V/50Hz, 460V/60Hz - IEC, 230V-460V-575V/60Hz - UL-cUL) - Full-Feature (05/02/2020 - ...)

(((MOVOL:200V , MOVOL:400V , MOVOL:500V) + FREQ:50HZ , FREQ:60HZ + MOVOL:460V) + CAPPRE:IEC , (MOVOL:230V , MOVOL:460V , MOVOL:575V) + CAPPRE:ULCUL + FREQ:60HZ) + IDRY:Y + MODEL:GA110VP_16

Ref	Part Number	Qty	Name	Validity	EL
	1089 9513 28	1	HOLDER	**(25/02/2019 - 04/02/2020)** (((CAPPRM:AS1210 , CAPPRM:CE , CAPPRM:MHLW , CAPPRM:MOM) + FREQ:50HZ + MOVOL:400V , (CAPPRM:ASME , CAPPRM:MHLW) + FREQ:60HZ + MOVOL:460V) + CAPPRE:IEC , CAPPRE:ULCUL + CAPPRM:ASME + FREQ:60HZ + MOVOL:460V) + COOL:WATER **(05/02/2020 - ...)** ((((CAPPRM:AS1210 , CAPPRM:CE , CAPPRM:MHLW , CAPPRM:MOM) + MOVOL:400V , CAPPRM:CE + COOL:AIR + MOVOL:500V) + FREQ:50HZ , (CAPPRM:ASME , CAPPRM:MHLW) + FREQ:60HZ + MOVOL:460V) + CAPPRE:IEC , (COOL:AIR + MOVOL:575V , MOVOL:460V) + CAPPRE:ULCUL + CAPPRM:ASME + FREQ:60HZ)	S3
	~~1089 9513 30~~	4	CONTACTOR	**(25/02/2019 - 04/02/2020)** (((CAPPRM:AS1210 , CAPPRM:CE , CAPPRM:MHLW , CAPPRM:MOM) + FREQ:50HZ + MOVOL:400V , (CAPPRM:ASME , CAPPRM:MHLW) + FREQ:60HZ + MOVOL:460V) + CAPPRE:IEC , CAPPRE:ULCUL + CAPPRM:ASME + FREQ:60HZ + MOVOL:460V) + COOL:WATER **(05/02/2020 - ...)** ((((CAPPRM:AS1210 , CAPPRM:CE , CAPPRM:MHLW , CAPPRM:MOM) + MOVOL:400V , CAPPRM:CE + COOL:AIR + MOVOL:500V) + FREQ:50HZ , (CAPPRM:ASME , CAPPRM:MHLW) + FREQ:60HZ + MOVOL:460V) + CAPPRE:IEC , (COOL:AIR + MOVOL:575V , MOVOL:460V) + CAPPRE:ULCUL + CAPPRM:ASME + FREQ:60HZ)	S3
	Substituted by:	1089 9513 04 - CONTACT BLOCK (quantity: 1)			
	1088 0039 07	3	TERMINAL	**(25/02/2019 - 04/02/2020)** (((CAPPRM:AS1210 , CAPPRM:CE , CAPPRM:MHLW , CAPPRM:MOM) + FREQ:50HZ + MOVOL:400V , (CAPPRM:ASME , CAPPRM:MHLW) + FREQ:60HZ + MOVOL:460V) + CAPPRE:IEC , CAPPRE:ULCUL + CAPPRM:ASME + FREQ:60HZ + MOVOL:460V) + COOL:WATER **(05/02/2020 - ...)** ((((CAPPRM:AS1210 , CAPPRM:CE , CAPPRM:MHLW , CAPPRM:MOM) + MOVOL:400V , CAPPRM:CE + COOL:AIR + MOVOL:500V) + FREQ:50HZ , (CAPPRM:ASME , CAPPRM:MHLW) + FREQ:60HZ + MOVOL:460V) + CAPPRE:IEC , (COOL:AIR + MOVOL:575V , MOVOL:460V) + CAPPRE:ULCUL + CAPPRM:ASME + FREQ:60HZ)	X152
	1088 0039 05	1	PLATE	**(25/02/2019 - 04/02/2020)** (((CAPPRM:AS1210 , CAPPRM:CE , CAPPRM:MHLW , CAPPRM:MOM) + FREQ:50HZ + MOVOL:400V , (CAPPRM:ASME , CAPPRM:MHLW) + FREQ:60HZ + MOVOL:460V) + CAPPRE:IEC , CAPPRE:ULCUL + CAPPRM:ASME + FREQ:60HZ + MOVOL:460V) + COOL:WATER **(05/02/2020 - ...)** ((((CAPPRM:AS1210 , CAPPRM:CE , CAPPRM:MHLW , CAPPRM:MOM) + MOVOL:400V , CAPPRM:CE + COOL:AIR + MOVOL:500V) + FREQ:50HZ , (CAPPRM:ASME , CAPPRM:MHLW) + FREQ:60HZ + MOVOL:460V) + CAPPRE:IEC , (COOL:AIR + MOVOL:575V , MOVOL:460V) + CAPPRE:ULCUL + CAPPRM:ASME + FREQ:60HZ)	X152

Legend:

CAPPRE:IEC - Component approval electrical:IEC
CAPPRE:ULCUL - Component approval electrical:UL/cUL
CAPPRM:AS1210 - Component approval mechanical:AS1210
CAPPRM:ASME - Component approval mechanical:ASME
CAPPRM:CE - Component approval mechanical:CE
CAPPRM:MHLW - Component approval mechanical:MHLW
CAPPRM:MOM - Component approval mechanical:MOM
COOL:AIR - Cooling:Air cooled
COOL:WATER - Cooling:Water cooled
FREQ:50HZ - Frequency:50 Hz
FREQ:60HZ - Frequency:60 Hz
IDRY:Y - Integrated dryer:Yes
MODEL:GA110VP_16 - Model:GA 110VSD+
MOVOL:200V - Supply voltage:200 V
MOVOL:230V - Supply voltage:230 V
MOVOL:400V - Supply voltage:400 V
MOVOL:460V - Supply voltage:460 V
MOVOL:500V - Supply voltage:500 V
MOVOL:575V - Supply voltage:575 V

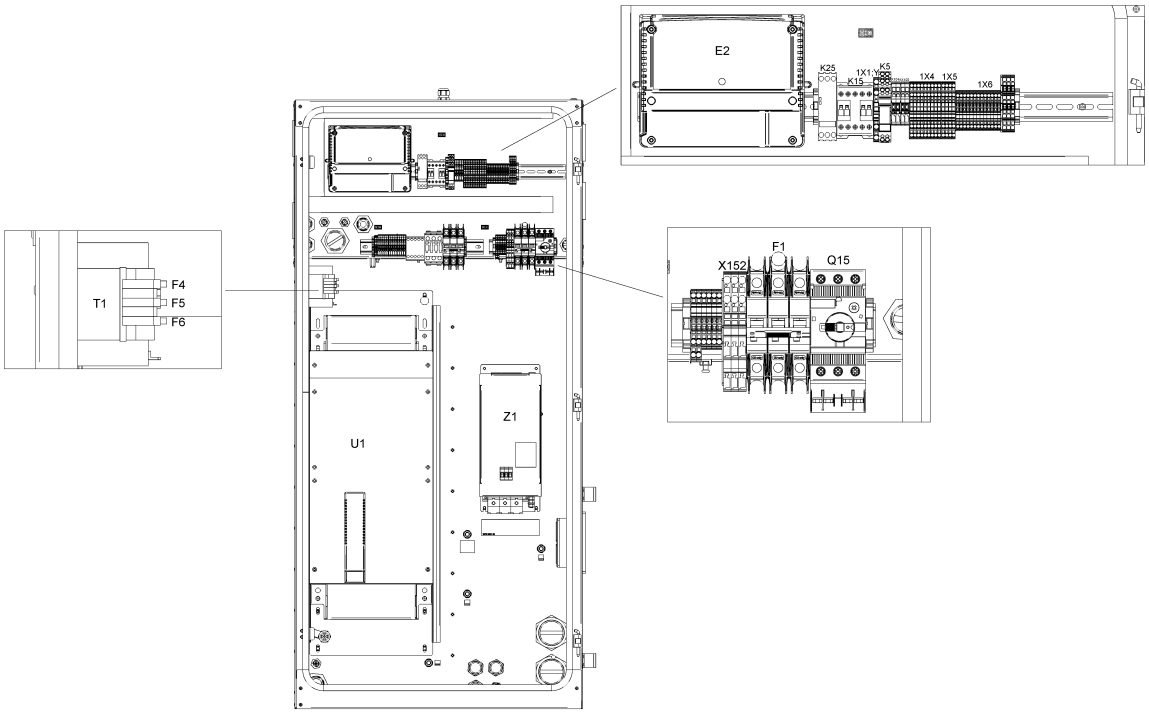
E2
K25
K15
1X1
K5
1X4
1X5
1X6
T1
F4
F5
F6
X152
F1
Q15
U1
Z1

21.28 - Cubicle components GA 110 VSD+ - (200V-400V-500V/50Hz, 460V/60Hz - IEC, 230V-460V-575V/60Hz - UL-cUL) - Full-Feature (05/02/2020 - ...)

(((MOVOL:200V , MOVOL:400V , MOVOL:500V) + FREQ:50HZ , FREQ:60HZ + MOVOL:460V) + CAPPRE:IEC , (MOVOL:230V , MOVOL:460V , MOVOL:575V) + CAPPRE:ULCUL + FREQ:60HZ) + IDRY:Y + MODEL:GA110VP_16

Ref	Part Number	Qty	Name	Validity	EL
	1088 0039 26	1	CONNECTOR	**(25/02/2019 - 04/02/2020)** (((CAPPRM:AS1210 , CAPPRM:CE , CAPPRM:MHLW , CAPPRM:MOM) + FREQ:50HZ + MOVOL:400V , (CAPPRM:ASME , CAPPRM:MHLW) + FREQ:60HZ + MOVOL:460V) + CAPPRE:IEC , CAPPRE:ULCUL + CAPPRM:ASME + FREQ:60HZ + MOVOL:460V) + COOL:WATER **(05/02/2020 - ...)** ((((CAPPRM:AS1210 , CAPPRM:CE , CAPPRM:MHLW , CAPPRM:MOM) + MOVOL:400V , CAPPRM:CE + COOL:AIR + MOVOL:500V) + FREQ:50HZ , (CAPPRM:ASME , CAPPRM:MHLW) + FREQ:60HZ + MOVOL:460V) + CAPPRE:IEC , (COOL:AIR + MOVOL:575V , MOVOL:460V) + CAPPRE:ULCUL + CAPPRM:ASME + FREQ:60HZ)	
	Electrical legend:	X152 (remove coding pin 1,3)			
	1088 0037 99	4	PIN	**(25/02/2019 - 04/02/2020)** (((CAPPRM:AS1210 , CAPPRM:CE , CAPPRM:MHLW , CAPPRM:MOM) + FREQ:50HZ + MOVOL:400V , (CAPPRM:ASME , CAPPRM:MHLW) + FREQ:60HZ + MOVOL:460V) + CAPPRE:IEC , CAPPRE:ULCUL + CAPPRM:ASME + FREQ:60HZ + MOVOL:460V) + COOL:WATER **(05/02/2020 - ...)** ((((CAPPRM:AS1210 , CAPPRM:CE , CAPPRM:MHLW , CAPPRM:MOM) + MOVOL:400V , CAPPRM:CE + COOL:AIR + MOVOL:500V) + FREQ:50HZ , (CAPPRM:ASME , CAPPRM:MHLW) + FREQ:60HZ + MOVOL:460V) + CAPPRE:IEC , (COOL:AIR + MOVOL:575V , MOVOL:460V) + CAPPRE:ULCUL + CAPPRM:ASME + FREQ:60HZ)	X152:1; 3
	~~1088 0031 81~~	7	END STOP BRACKET 6MM	**(25/02/2019 - 04/02/2020)** (((CAPPRM:AS1210 , CAPPRM:CE , CAPPRM:MHLW , CAPPRM:MOM) + FREQ:50HZ + MOVOL:400V , (CAPPRM:ASME , CAPPRM:MHLW) + FREQ:60HZ + MOVOL:460V) + CAPPRE:IEC , CAPPRE:ULCUL + CAPPRM:ASME + FREQ:60HZ + MOVOL:460V) + COOL:WATER **(05/02/2020 - ...)** ((((CAPPRM:AS1210 , CAPPRM:CE , CAPPRM:MHLW , CAPPRM:MOM) + MOVOL:400V , CAPPRM:CE + COOL:AIR + MOVOL:500V) + FREQ:50HZ , (CAPPRM:ASME , CAPPRM:MHLW) + FREQ:60HZ + MOVOL:460V) + CAPPRE:IEC , (COOL:AIR + MOVOL:575V , MOVOL:460V) + CAPPRE:ULCUL + CAPPRM:ASME + FREQ:60HZ)	
	Electrical legend:	Connector/terminal rail			
	Substituted by:	1089 0577 82 - END RETAINER (quantity: 1)			
	1088 0039 38	2	TERMINAL	**(25/02/2019 - 04/02/2020)** (((CAPPRM:AS1210 , CAPPRM:CE , CAPPRM:MHLW , CAPPRM:MOM) + FREQ:50HZ + MOVOL:400V , (CAPPRM:ASME , CAPPRM:MHLW) + FREQ:60HZ + MOVOL:460V) + CAPPRE:IEC , CAPPRE:ULCUL + CAPPRM:ASME + FREQ:60HZ + MOVOL:460V) + COOL:WATER **(05/02/2020 - ...)** ((((CAPPRM:AS1210 , CAPPRM:CE , CAPPRM:MHLW , CAPPRM:MOM) + MOVOL:400V , CAPPRM:CE + COOL:AIR + MOVOL:500V) + FREQ:50HZ , (CAPPRM:ASME , CAPPRM:MHLW) + FREQ:60HZ + MOVOL:460V) + CAPPRE:IEC , (COOL:AIR + MOVOL:575V , MOVOL:460V) + CAPPRE:ULCUL + CAPPRM:ASME + FREQ:60HZ)	1X11:2,5

Legend:

CAPPRE:IEC - Component approval electrical:IEC
CAPPRM:ASME - Component approval mechanical:ASME
CAPPRM:MOM - Component approval mechanical:MOM
FREQ:50HZ - Frequency:50 Hz
MODEL:GA110VP_16 - Model:GA 110VSD+
MOVOL:400V - Supply voltage:400 V
MOVOL:575V - Supply voltage:575 V
CAPPRE:ULCUL - Component approval electrical:UL/cUL
CAPPRM:CE - Component approval mechanical:CE
COOL:AIR - Cooling:Air cooled
FREQ:60HZ - Frequency:60 Hz
MOVOL:200V - Supply voltage:200 V
MOVOL:460V - Supply voltage:460 V
CAPPRM:AS1210 - Component approval mechanical:AS1210
CAPPRM:MHLW - Component approval mechanical:MHLW
COOL:WATER - Cooling:Water cooled
IDRY:Y - Integrated dryer:Yes
MOVOL:230V - Supply voltage:230 V
MOVOL:500V - Supply voltage:500 V

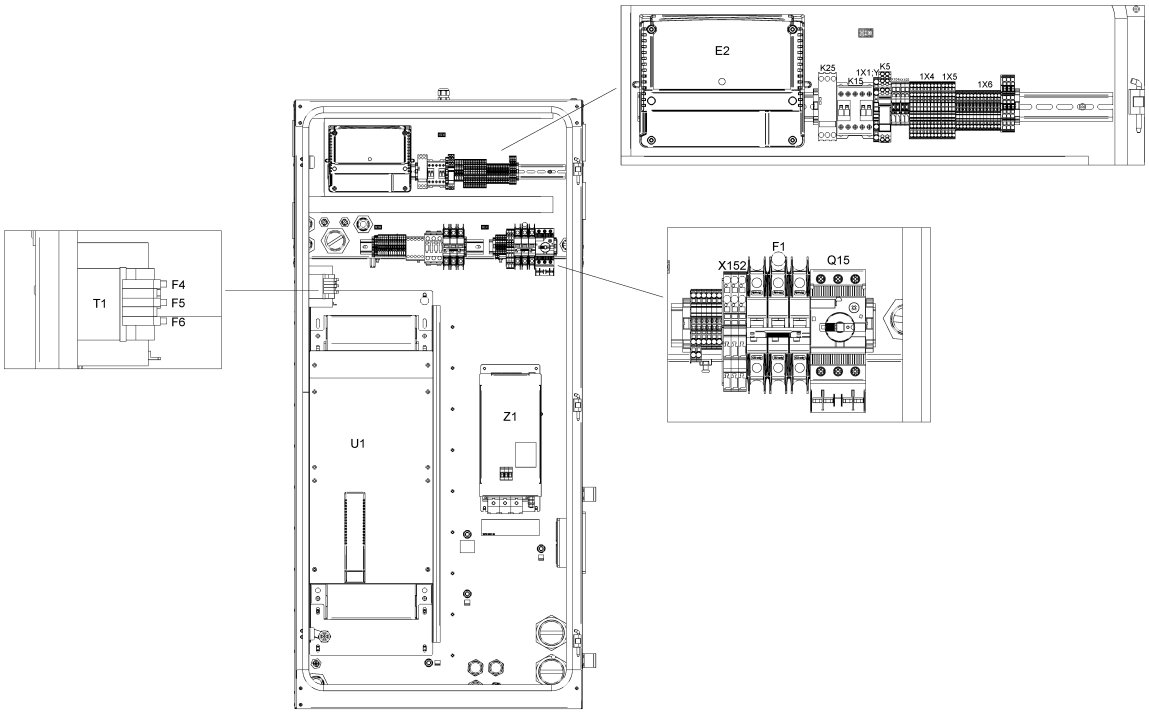
E2
K25
K15
1X1
K5
1X4
1X5
1X6
T1
F4
F5
F6
X152
F1
Q15
U1
Z1

21.28 - Cubicle components GA 110 VSD+ - (200V-400V-500V/50Hz, 460V/60Hz - IEC, 230V-460V-575V/60Hz - UL-cUL) - Full-Feature (05/02/2020 - ...)

(((MOVOL:200V , MOVOL:400V , MOVOL:500V) + FREQ:50HZ , FREQ:60HZ + MOVOL:460V) + CAPPRE:IEC , (MOVOL:230V , MOVOL:460V , MOVOL:575V) + CAPPRE:ULCUL + FREQ:60HZ) + IDRY:Y + MODEL:GA110VP_16

Ref	Part Number	Qty	Name	Validity	EL
	1088 0039 40	1	PLATE	**(25/02/2019 - 04/02/2020)** (((CAPPRM:AS1210 , CAPPRM:CE , CAPPRM:MHLW , CAPPRM:MOM) + FREQ:50HZ + MOVOL:400V , (CAPPRM:ASME , CAPPRM:MHLW) + FREQ:60HZ + MOVOL:460V) + CAPPRE:IEC , CAPPRE:ULCUL + CAPPRM:ASME + FREQ:60HZ + MOVOL:460V) + COOL:WATER **(05/02/2020 - ...)** ((((CAPPRM:AS1210 , CAPPRM:CE , CAPPRM:MHLW , CAPPRM:MOM) + MOVOL:400V , CAPPRM:CE + COOL:AIR + MOVOL:500V) + FREQ:50HZ , (CAPPRM:ASME , CAPPRM:MHLW) + FREQ:60HZ + MOVOL:460V) + CAPPRE:IEC , (COOL:AIR + MOVOL:575V , MOVOL:460V) + CAPPRE:ULCUL + CAPPRM:ASME + FREQ:60HZ)	1X11
	1088 0039 34	4	TERMINAL	**(25/02/2019 - 04/02/2020)** (((CAPPRM:AS1210 , CAPPRM:CE , CAPPRM:MHLW , CAPPRM:MOM) + FREQ:50HZ + MOVOL:400V , (CAPPRM:ASME , CAPPRM:MHLW) + FREQ:60HZ + MOVOL:460V) + CAPPRE:IEC , CAPPRE:ULCUL + CAPPRM:ASME + FREQ:60HZ + MOVOL:460V) + COOL:WATER **(05/02/2020 - ...)** ((((CAPPRM:AS1210 , CAPPRM:CE , CAPPRM:MHLW , CAPPRM:MOM) + MOVOL:400V , CAPPRM:CE + COOL:AIR + MOVOL:500V) + FREQ:50HZ , (CAPPRM:ASME , CAPPRM:MHLW) + FREQ:60HZ + MOVOL:460V) + CAPPRE:IEC , (COOL:AIR + MOVOL:575V , MOVOL:460V) + CAPPRE:ULCUL + CAPPRM:ASME + FREQ:60HZ)	
	Electrical legend:	1X11:30,301,34			
	1088 0039 35	1	PLATE	**(25/02/2019 - 04/02/2020)** (((CAPPRM:AS1210 , CAPPRM:CE , CAPPRM:MHLW , CAPPRM:MOM) + FREQ:50HZ + MOVOL:400V , (CAPPRM:ASME , CAPPRM:MHLW) + FREQ:60HZ + MOVOL:460V) + CAPPRE:IEC , CAPPRE:ULCUL + CAPPRM:ASME + FREQ:60HZ + MOVOL:460V) + COOL:WATER **(05/02/2020 - ...)** ((((CAPPRM:AS1210 , CAPPRM:CE , CAPPRM:MHLW , CAPPRM:MOM) + MOVOL:400V , CAPPRM:CE + COOL:AIR + MOVOL:500V) + FREQ:50HZ , (CAPPRM:ASME , CAPPRM:MHLW) + FREQ:60HZ + MOVOL:460V) + CAPPRE:IEC , (COOL:AIR + MOVOL:575V , MOVOL:460V) + CAPPRE:ULCUL + CAPPRM:ASME + FREQ:60HZ)	1X11
	1088 0039 04	2	TERMINAL	**(25/02/2019 - 04/02/2020)** (((CAPPRM:AS1210 , CAPPRM:CE , CAPPRM:MHLW , CAPPRM:MOM) + FREQ:50HZ + MOVOL:400V , (CAPPRM:ASME , CAPPRM:MHLW) + FREQ:60HZ + MOVOL:460V) + CAPPRE:IEC , CAPPRE:ULCUL + CAPPRM:ASME + FREQ:60HZ + MOVOL:460V) + COOL:WATER **(05/02/2020 - ...)** ((((CAPPRM:AS1210 , CAPPRM:CE , CAPPRM:MHLW , CAPPRM:MOM) + MOVOL:400V , CAPPRM:CE + COOL:AIR + MOVOL:500V) + FREQ:50HZ , (CAPPRM:ASME , CAPPRM:MHLW) + FREQ:60HZ + MOVOL:460V) + CAPPRE:IEC , (COOL:AIR + MOVOL:575V , MOVOL:460V) + CAPPRE:ULCUL + CAPPRM:ASME + FREQ:60HZ)	X104a

Legend:

CAPPRE:IEC - Component approval electrical:IEC
CAPPRM:ASME - Component approval mechanical:ASME
CAPPRM:MOM - Component approval mechanical:MOM
FREQ:50HZ - Frequency:50 Hz
MODEL:GA110VP_16 - Model:GA 110VSD+
MOVOL:400V - Supply voltage:400 V
MOVOL:575V - Supply voltage:575 V
CAPPRE:ULCUL - Component approval electrical:UL/cUL
CAPPRM:CE - Component approval mechanical:CE
COOL:AIR - Cooling:Air cooled
FREQ:60HZ - Frequency:60 Hz
MOVOL:200V - Supply voltage:200 V
MOVOL:460V - Supply voltage:460 V
CAPPRM:AS1210 - Component approval mechanical:AS1210
CAPPRM:MHLW - Component approval mechanical:MHLW
COOL:WATER - Cooling:Water cooled
IDRY:Y - Integrated dryer:Yes
MOVOL:230V - Supply voltage:230 V
MOVOL:500V - Supply voltage:500 V

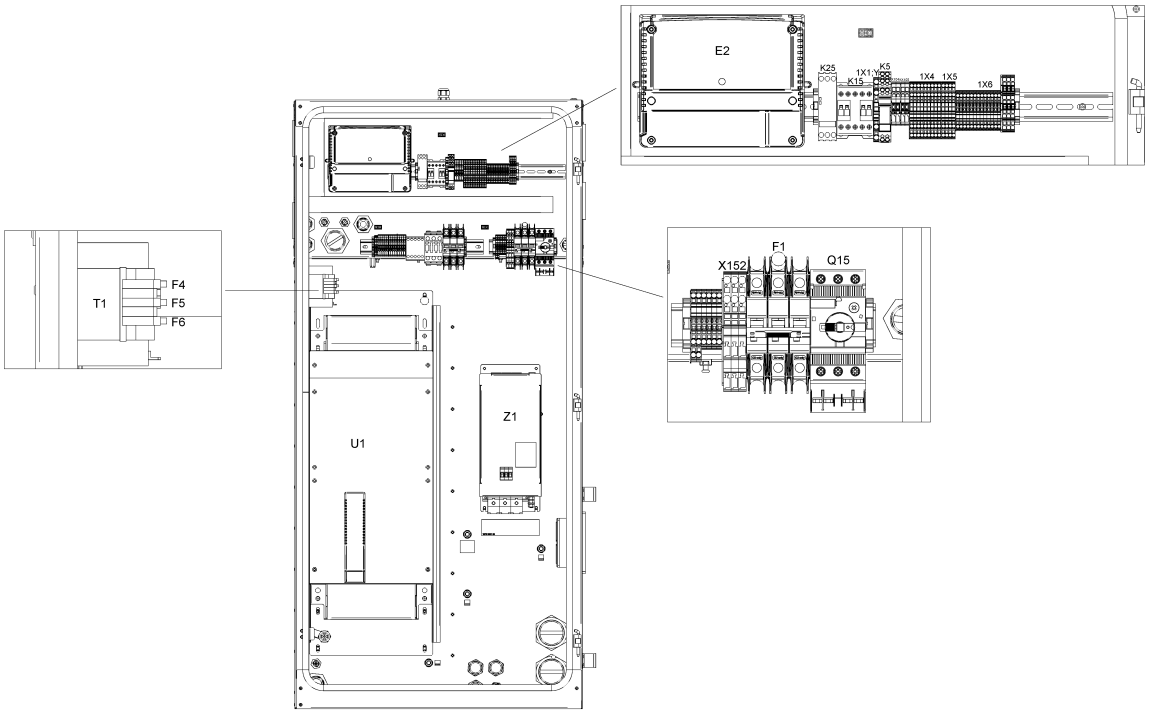
E2
K25
K15
1X1
K5
1X4
1X5
1X6
T1
F4
F5
F6
X152
F1
Q15
U1
Z1

21.28 - Cubicle components GA 110 VSD+ - (200V-400V-500V/50Hz, 460V/60Hz - IEC, 230V-460V-575V/60Hz - UL-cUL) - Full-Feature (05/02/2020 - ...)

(((MOVOL:200V , MOVOL:400V , MOVOL:500V) + FREQ:50HZ , FREQ:60HZ + MOVOL:460V) + CAPPRE:IEC , (MOVOL:230V , MOVOL:460V , MOVOL:575V) + CAPPRE:ULCUL + FREQ:60HZ) + IDRY:Y + MODEL:GA110VP_16

Ref	Part Number	Qty	Name	Validity	EL
	1088 0037 99	2	PIN	**(25/02/2019 - 04/02/2020)** (((CAPPRM:AS1210 , CAPPRM:CE , CAPPRM:MHLW , CAPPRM:MOM) + FREQ:50HZ + MOVOL:400V , (CAPPRM:ASME , CAPPRM:MHLW) + FREQ:60HZ + MOVOL:460V) + CAPPRE:IEC , CAPPRE:ULCUL + CAPPRM:ASME + FREQ:60HZ + MOVOL:460V) + COOL:WATER **(05/02/2020 - ...)** ((((CAPPRM:AS1210 , CAPPRM:CE , CAPPRM:MHLW , CAPPRM:MOM) + MOVOL:400V , CAPPRM:CE + COOL:AIR + MOVOL:500V) + FREQ:50HZ , (CAPPRM:ASME , CAPPRM:MHLW) + FREQ:60HZ + MOVOL:460V) + CAPPRE:IEC , (COOL:AIR + MOVOL:575V , MOVOL:460V) + CAPPRE:ULCUL + CAPPRM:ASME + FREQ:60HZ)	X104a/X105
	1088 0039 02	1	PLATE	**(25/02/2019 - 04/02/2020)** (((CAPPRM:AS1210 , CAPPRM:CE , CAPPRM:MHLW , CAPPRM:MOM) + FREQ:50HZ + MOVOL:400V , (CAPPRM:ASME , CAPPRM:MHLW) + FREQ:60HZ + MOVOL:460V) + CAPPRE:IEC , CAPPRE:ULCUL + CAPPRM:ASME + FREQ:60HZ + MOVOL:460V) + COOL:WATER **(05/02/2020 - ...)** ((((CAPPRM:AS1210 , CAPPRM:CE , CAPPRM:MHLW , CAPPRM:MOM) + MOVOL:400V , CAPPRM:CE + COOL:AIR + MOVOL:500V) + FREQ:50HZ , (CAPPRM:ASME , CAPPRM:MHLW) + FREQ:60HZ + MOVOL:460V) + CAPPRE:IEC , (COOL:AIR + MOVOL:575V , MOVOL:460V) + CAPPRE:ULCUL + CAPPRM:ASME + FREQ:60HZ)	X104a
	1088 0039 07	2	TERMINAL	**(25/02/2019 - 04/02/2020)** (((CAPPRM:AS1210 , CAPPRM:CE , CAPPRM:MHLW , CAPPRM:MOM) + FREQ:50HZ + MOVOL:400V , (CAPPRM:ASME , CAPPRM:MHLW) + FREQ:60HZ + MOVOL:460V) + CAPPRE:IEC , CAPPRE:ULCUL + CAPPRM:ASME + FREQ:60HZ + MOVOL:460V) + COOL:WATER **(05/02/2020 - ...)** ((((CAPPRM:AS1210 , CAPPRM:CE , CAPPRM:MHLW , CAPPRM:MOM) + MOVOL:400V , CAPPRM:CE + COOL:AIR + MOVOL:500V) + FREQ:50HZ , (CAPPRM:ASME , CAPPRM:MHLW) + FREQ:60HZ + MOVOL:460V) + CAPPRE:IEC , (COOL:AIR + MOVOL:575V , MOVOL:460V) + CAPPRE:ULCUL + CAPPRM:ASME + FREQ:60HZ)	X105
	1088 0039 05	1	PLATE	**(25/02/2019 - 04/02/2020)** (((CAPPRM:AS1210 , CAPPRM:CE , CAPPRM:MHLW , CAPPRM:MOM) + FREQ:50HZ + MOVOL:400V , (CAPPRM:ASME , CAPPRM:MHLW) + FREQ:60HZ + MOVOL:460V) + CAPPRE:IEC , CAPPRE:ULCUL + CAPPRM:ASME + FREQ:60HZ + MOVOL:460V) + COOL:WATER **(05/02/2020 - ...)** ((((CAPPRM:AS1210 , CAPPRM:CE , CAPPRM:MHLW , CAPPRM:MOM) + MOVOL:400V , CAPPRM:CE + COOL:AIR + MOVOL:500V) + FREQ:50HZ , (CAPPRM:ASME , CAPPRM:MHLW) + FREQ:60HZ + MOVOL:460V) + CAPPRE:IEC , (COOL:AIR + MOVOL:575V , MOVOL:460V) + CAPPRE:ULCUL + CAPPRM:ASME + FREQ:60HZ)	X105

Legend:

CAPPRE:IEC - Component approval electrical:IEC
CAPPRE:ULCUL - Component approval electrical:UL/cUL
CAPPRM:AS1210 - Component approval mechanical:AS1210
CAPPRM:ASME - Component approval mechanical:ASME
CAPPRM:CE - Component approval mechanical:CE
CAPPRM:MHLW - Component approval mechanical:MHLW
CAPPRM:MOM - Component approval mechanical:MOM
COOL:AIR - Cooling:Air cooled
COOL:WATER - Cooling:Water cooled
FREQ:50HZ - Frequency:50 Hz
FREQ:60HZ - Frequency:60 Hz
IDRY:Y - Integrated dryer:Yes
MODEL:GA110VP_16 - Model:GA 110VSD+
MOVOL:200V - Supply voltage:200 V
MOVOL:230V - Supply voltage:230 V
MOVOL:400V - Supply voltage:400 V
MOVOL:460V - Supply voltage:460 V
MOVOL:500V - Supply voltage:500 V
MOVOL:575V - Supply voltage:575 V

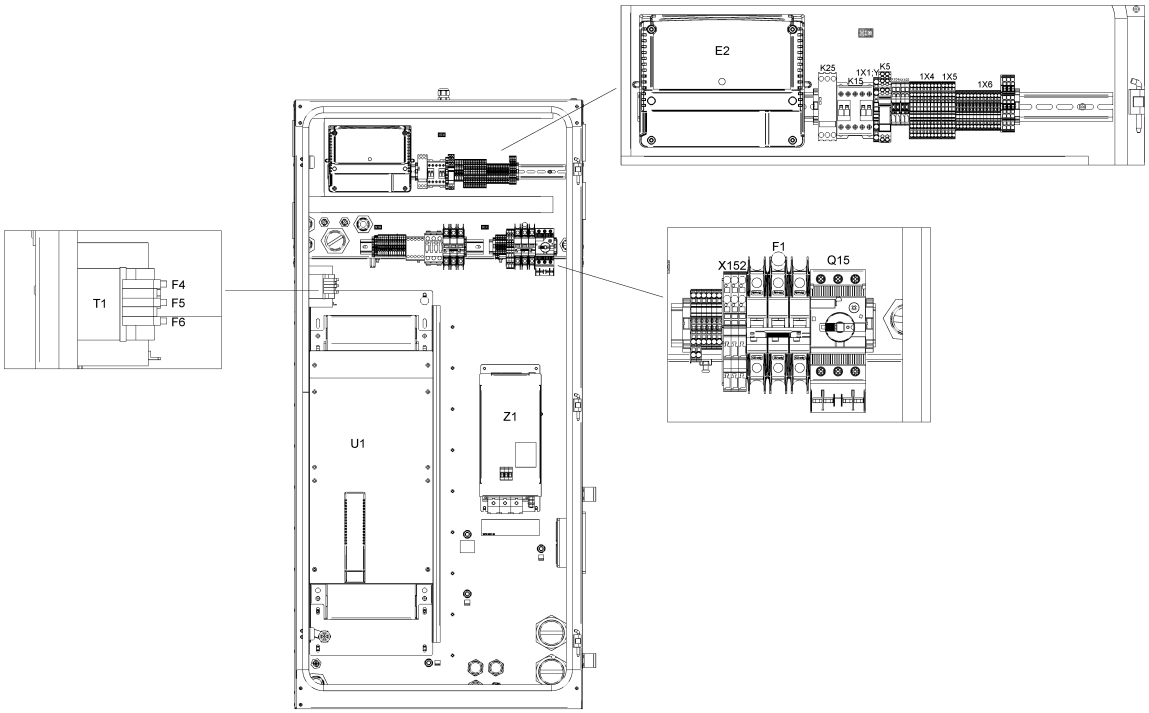
E2
K25
K15
1X1
K5
1X4
1X5
1X6
T1
F4
F5
F6
X152
F1
Q15
U1
Z1

21.28 - Cubicle components GA 110 VSD+ - (200V-400V-500V/50Hz, 460V/60Hz - IEC, 230V-460V-575V/60Hz - UL-cUL) - Full-Feature (05/02/2020 - ...)

(((MOVOL:200V , MOVOL:400V , MOVOL:500V) + FREQ:50HZ , FREQ:60HZ + MOVOL:460V) + CAPPRE:IEC , (MOVOL:230V , MOVOL:460V , MOVOL:575V) + CAPPRE:ULCUL + FREQ:60HZ) + IDRY:Y + MODEL:GA110VP_16

Ref	Part Number	Qty	Name	Validity	EL
	1088 0039 34	13	TERMINAL	**(25/02/2019 - 04/02/2020)** (((CAPPRM:AS1210 , CAPPRM:CE , CAPPRM:MHLW , CAPPRM:MOM) + FREQ:50HZ + MOVOL:400V , (CAPPRM:ASME , CAPPRM:MHLW) + FREQ:60HZ + MOVOL:460V) + CAPPRE:IEC , CAPPRE:ULCUL + CAPPRM:ASME + FREQ:60HZ + MOVOL:460V) + COOL:WATER **(05/02/2020 - ...)** ((((CAPPRM:AS1210 , CAPPRM:CE , CAPPRM:MHLW , CAPPRM:MOM) + MOVOL:400V , CAPPRM:CE + COOL:AIR + MOVOL:500V) + FREQ:50HZ , (CAPPRM:ASME , CAPPRM:MHLW) + FREQ:60HZ + MOVOL:460V) + CAPPRE:IEC , (COOL:AIR + MOVOL:575V , MOVOL:460V) + CAPPRE:ULCUL + CAPPRM:ASME + FREQ:60HZ)	1X6
	1088 0037 69	3	CONNECTOR	**(25/02/2019 - 04/02/2020)** (((CAPPRM:AS1210 , CAPPRM:CE , CAPPRM:MHLW , CAPPRM:MOM) + FREQ:50HZ + MOVOL:400V , (CAPPRM:ASME , CAPPRM:MHLW) + FREQ:60HZ + MOVOL:460V) + CAPPRE:IEC , CAPPRE:ULCUL + CAPPRM:ASME + FREQ:60HZ + MOVOL:460V) + COOL:WATER **(05/02/2020 - ...)** ((((CAPPRM:AS1210 , CAPPRM:CE , CAPPRM:MHLW , CAPPRM:MOM) + MOVOL:400V , CAPPRM:CE + COOL:AIR + MOVOL:500V) + FREQ:50HZ , (CAPPRM:ASME , CAPPRM:MHLW) + FREQ:60HZ + MOVOL:460V) + CAPPRE:IEC , (COOL:AIR + MOVOL:575V , MOVOL:460V) + CAPPRE:ULCUL + CAPPRM:ASME + FREQ:60HZ)	1X7
	1088 0039 35	1	PLATE	**(25/02/2019 - 04/02/2020)** (((CAPPRM:AS1210 , CAPPRM:CE , CAPPRM:MHLW , CAPPRM:MOM) + FREQ:50HZ + MOVOL:400V , (CAPPRM:ASME , CAPPRM:MHLW) + FREQ:60HZ + MOVOL:460V) + CAPPRE:IEC , CAPPRE:ULCUL + CAPPRM:ASME + FREQ:60HZ + MOVOL:460V) + COOL:WATER **(05/02/2020 - ...)** ((((CAPPRM:AS1210 , CAPPRM:CE , CAPPRM:MHLW , CAPPRM:MOM) + MOVOL:400V , CAPPRM:CE + COOL:AIR + MOVOL:500V) + FREQ:50HZ , (CAPPRM:ASME , CAPPRM:MHLW) + FREQ:60HZ + MOVOL:460V) + CAPPRE:IEC , (COOL:AIR + MOVOL:575V , MOVOL:460V) + CAPPRE:ULCUL + CAPPRM:ASME + FREQ:60HZ)	1X6
	1088 0040 37	1	END PLATE	**(25/02/2019 - 04/02/2020)** (((CAPPRM:AS1210 , CAPPRM:CE , CAPPRM:MHLW , CAPPRM:MOM) + FREQ:50HZ + MOVOL:400V , (CAPPRM:ASME , CAPPRM:MHLW) + FREQ:60HZ + MOVOL:460V) + CAPPRE:IEC , CAPPRE:ULCUL + CAPPRM:ASME + FREQ:60HZ + MOVOL:460V) + COOL:WATER **(05/02/2020 - ...)** ((((CAPPRM:AS1210 , CAPPRM:CE , CAPPRM:MHLW , CAPPRM:MOM) + MOVOL:400V , CAPPRM:CE + COOL:AIR + MOVOL:500V) + FREQ:50HZ , (CAPPRM:ASME , CAPPRM:MHLW) + FREQ:60HZ + MOVOL:460V) + CAPPRE:IEC , (COOL:AIR + MOVOL:575V , MOVOL:460V) + CAPPRE:ULCUL + CAPPRM:ASME + FREQ:60HZ)	1X7

Legend:

CAPPRE:IEC - Component approval electrical:IEC
CAPPRE:ULCUL - Component approval electrical:UL/cUL
CAPPRM:AS1210 - Component approval mechanical:AS1210
CAPPRM:ASME - Component approval mechanical:ASME
CAPPRM:CE - Component approval mechanical:CE
CAPPRM:MHLW - Component approval mechanical:MHLW
CAPPRM:MOM - Component approval mechanical:MOM
COOL:AIR - Cooling:Air cooled
COOL:WATER - Cooling:Water cooled
FREQ:50HZ - Frequency:50 Hz
FREQ:60HZ - Frequency:60 Hz
IDRY:Y - Integrated dryer:Yes
MODEL:GA110VP_16 - Model:GA 110VSD+
MOVOL:200V - Supply voltage:200 V
MOVOL:230V - Supply voltage:230 V
MOVOL:400V - Supply voltage:400 V
MOVOL:460V - Supply voltage:460 V
MOVOL:500V - Supply voltage:500 V
MOVOL:575V - Supply voltage:575 V

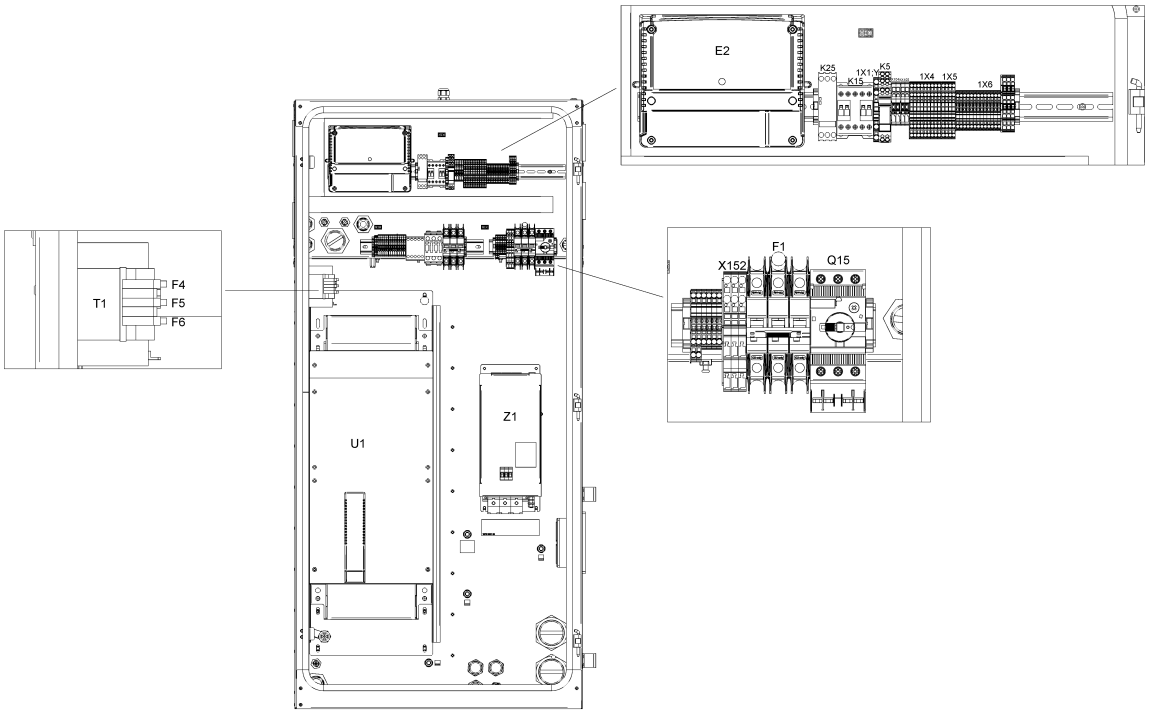
E2
K25
K15
1X1
K5
1X4
1X5
1X6
T1
F4
F5
F6
X152
F1
Q15
U1
Z1

21.28 - Cubicle components GA 110 VSD+ - (200V-400V-500V/50Hz, 460V/60Hz - IEC, 230V-460V-575V/60Hz - UL-cUL) - Full-Feature (05/02/2020 - ...)

(((MOVOL:200V , MOVOL:400V , MOVOL:500V) + FREQ:50HZ , FREQ:60HZ + MOVOL:460V) + CAPPRE:IEC , (MOVOL:230V , MOVOL:460V , MOVOL:575V) + CAPPRE:ULCUL + FREQ:60HZ) + IDRY:Y + MODEL:GA110VP_16

Ref	Part Number	Qty	Name	Validity	EL
	1088 0039 36	9	TERMINAL	**(25/02/2019 - 04/02/2020)** (((CAPPRM:AS1210 , CAPPRM:CE , CAPPRM:MHLW , CAPPRM:MOM) + FREQ:50HZ + MOVOL:400V , (CAPPRM:ASME , CAPPRM:MHLW) + FREQ:60HZ + MOVOL:460V) + CAPPRE:IEC , CAPPRE:ULCUL + CAPPRM:ASME + FREQ:60HZ + MOVOL:460V) + COOL:WATER **(05/02/2020 - ...)** ((((CAPPRM:AS1210 , CAPPRM:CE , CAPPRM:MHLW , CAPPRM:MOM) + MOVOL:400V , CAPPRM:CE + COOL:AIR + MOVOL:500V) + FREQ:50HZ , (CAPPRM:ASME , CAPPRM:MHLW) + FREQ:60HZ + MOVOL:460V) + CAPPRE:IEC , (COOL:AIR + MOVOL:575V , MOVOL:460V) + CAPPRE:ULCUL + CAPPRM:ASME + FREQ:60HZ)	1X4
	1088 0039 36	4	TERMINAL	**(25/02/2019 - 04/02/2020)** (((CAPPRM:AS1210 , CAPPRM:CE , CAPPRM:MHLW , CAPPRM:MOM) + FREQ:50HZ + MOVOL:400V , (CAPPRM:ASME , CAPPRM:MHLW) + FREQ:60HZ + MOVOL:460V) + CAPPRE:IEC , CAPPRE:ULCUL + CAPPRM:ASME + FREQ:60HZ + MOVOL:460V) + COOL:WATER **(05/02/2020 - ...)** ((((CAPPRM:AS1210 , CAPPRM:CE , CAPPRM:MHLW , CAPPRM:MOM) + MOVOL:400V , CAPPRM:CE + COOL:AIR + MOVOL:500V) + FREQ:50HZ , (CAPPRM:ASME , CAPPRM:MHLW) + FREQ:60HZ + MOVOL:460V) + CAPPRE:IEC , (COOL:AIR + MOVOL:575V , MOVOL:460V) + CAPPRE:ULCUL + CAPPRM:ASME + FREQ:60HZ)	1X6
	1088 0039 37	1	END PLATE	**(25/02/2019 - 04/02/2020)** (((CAPPRM:AS1210 , CAPPRM:CE , CAPPRM:MHLW , CAPPRM:MOM) + FREQ:50HZ + MOVOL:400V , (CAPPRM:ASME , CAPPRM:MHLW) + FREQ:60HZ + MOVOL:460V) + CAPPRE:IEC , CAPPRE:ULCUL + CAPPRM:ASME + FREQ:60HZ + MOVOL:460V) + COOL:WATER **(05/02/2020 - ...)** ((((CAPPRM:AS1210 , CAPPRM:CE , CAPPRM:MHLW , CAPPRM:MOM) + MOVOL:400V , CAPPRM:CE + COOL:AIR + MOVOL:500V) + FREQ:50HZ , (CAPPRM:ASME , CAPPRM:MHLW) + FREQ:60HZ + MOVOL:460V) + CAPPRE:IEC , (COOL:AIR + MOVOL:575V , MOVOL:460V) + CAPPRE:ULCUL + CAPPRM:ASME + FREQ:60HZ)	1X4
	1088 0039 37	1	END PLATE	**(25/02/2019 - 04/02/2020)** (((CAPPRM:AS1210 , CAPPRM:CE , CAPPRM:MHLW , CAPPRM:MOM) + FREQ:50HZ + MOVOL:400V , (CAPPRM:ASME , CAPPRM:MHLW) + FREQ:60HZ + MOVOL:460V) + CAPPRE:IEC , CAPPRE:ULCUL + CAPPRM:ASME + FREQ:60HZ + MOVOL:460V) + COOL:WATER **(05/02/2020 - ...)** ((((CAPPRM:AS1210 , CAPPRM:CE , CAPPRM:MHLW , CAPPRM:MOM) + MOVOL:400V , CAPPRM:CE + COOL:AIR + MOVOL:500V) + FREQ:50HZ , (CAPPRM:ASME , CAPPRM:MHLW) + FREQ:60HZ + MOVOL:460V) + CAPPRE:IEC , (COOL:AIR + MOVOL:575V , MOVOL:460V) + CAPPRE:ULCUL + CAPPRM:ASME + FREQ:60HZ)	1X6

Legend:

CAPPRE:IEC - Component approval electrical:IEC
CAPPRE:ULCUL - Component approval electrical:UL/cUL
CAPPRM:AS1210 - Component approval mechanical:AS1210
CAPPRM:ASME - Component approval mechanical:ASME
CAPPRM:CE - Component approval mechanical:CE
CAPPRM:MHLW - Component approval mechanical:MHLW
CAPPRM:MOM - Component approval mechanical:MOM
COOL:AIR - Cooling:Air cooled
COOL:WATER - Cooling:Water cooled
FREQ:50HZ - Frequency:50 Hz
FREQ:60HZ - Frequency:60 Hz
IDRY:Y - Integrated dryer:Yes
MODEL:GA110VP_16 - Model:GA 110VSD+
MOVOL:200V - Supply voltage:200 V
MOVOL:230V - Supply voltage:230 V
MOVOL:400V - Supply voltage:400 V
MOVOL:460V - Supply voltage:460 V
MOVOL:500V - Supply voltage:500 V
MOVOL:575V - Supply voltage:575 V

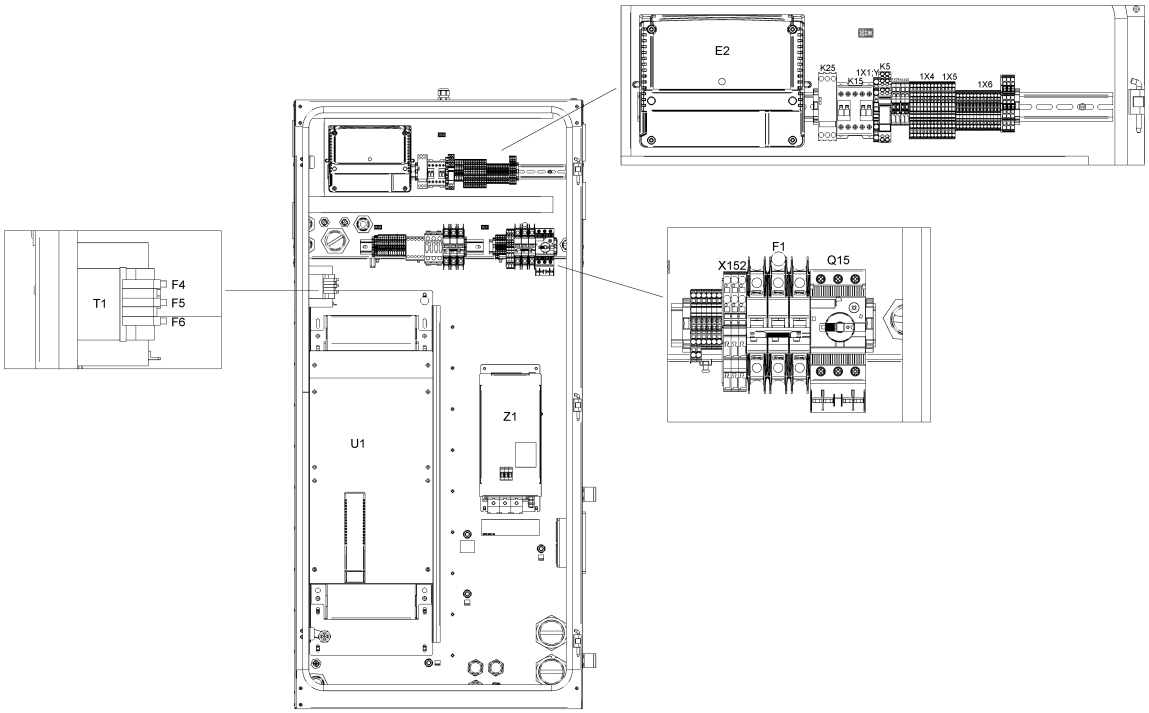
E2
K25
K15
1X1
K5
1X4
1X5
1X6
T1
F4
F5
F6
X152
F1
Q15
U1
Z1

21.28 - Cubicle components GA 110 VSD+ - (200V-400V-500V/50Hz, 460V/60Hz - IEC, 230V-460V-575V/60Hz - UL-cUL) - Full-Feature (05/02/2020 - ...)

(((MOVOL:200V , MOVOL:400V , MOVOL:500V) + FREQ:50HZ , FREQ:60HZ + MOVOL:460V) + CAPPRE:IEC , (MOVOL:230V , MOVOL:460V , MOVOL:575V) + CAPPRE:ULCUL + FREQ:60HZ) + IDRY:Y + MODEL:GA110VP_16

Ref	Part Number	Qty	Name	Validity	EL
	1088 0039 37	1	END PLATE	**(25/02/2019 - 04/02/2020)** (((CAPPRM:AS1210 , CAPPRM:CE , CAPPRM:MHLW , CAPPRM:MOM) + FREQ:50HZ + MOVOL:400V , (CAPPRM:ASME , CAPPRM:MHLW) + FREQ:60HZ + MOVOL:460V) + CAPPRE:IEC , CAPPRE:ULCUL + CAPPRM:ASME + FREQ:60HZ + MOVOL:460V) + COOL:WATER **(05/02/2020 - ...)** ((((CAPPRM:AS1210 , CAPPRM:CE , CAPPRM:MHLW , CAPPRM:MOM) + MOVOL:400V , CAPPRM:CE + COOL:AIR + MOVOL:500V) + FREQ:50HZ , (CAPPRM:ASME , CAPPRM:MHLW) + FREQ:60HZ + MOVOL:460V) + CAPPRE:IEC , (COOL:AIR + MOVOL:575V , MOVOL:460V) + CAPPRE:ULCUL + CAPPRM:ASME + FREQ:60HZ)	1X1:Y/D
	1088 0037 81	1	CONNECTOR	**(25/02/2019 - 04/02/2020)** (((CAPPRM:AS1210 , CAPPRM:CE , CAPPRM:MHLW , CAPPRM:MOM) + FREQ:50HZ + MOVOL:400V , (CAPPRM:ASME , CAPPRM:MHLW) + FREQ:60HZ + MOVOL:460V) + CAPPRE:IEC , CAPPRE:ULCUL + CAPPRM:ASME + FREQ:60HZ + MOVOL:460V) + COOL:WATER **(05/02/2020 - ...)** ((((CAPPRM:AS1210 , CAPPRM:CE , CAPPRM:MHLW , CAPPRM:MOM) + MOVOL:400V , CAPPRM:CE + COOL:AIR + MOVOL:500V) + FREQ:50HZ , (CAPPRM:ASME , CAPPRM:MHLW) + FREQ:60HZ + MOVOL:460V) + CAPPRE:IEC , (COOL:AIR + MOVOL:575V , MOVOL:460V) + CAPPRE:ULCUL + CAPPRM:ASME + FREQ:60HZ)	2X27
	1088 0037 80	1	CONNECTOR	**(25/02/2019 - 04/02/2020)** (((CAPPRM:AS1210 , CAPPRM:CE , CAPPRM:MHLW , CAPPRM:MOM) + FREQ:50HZ + MOVOL:400V , (CAPPRM:ASME , CAPPRM:MHLW) + FREQ:60HZ + MOVOL:460V) + CAPPRE:IEC , CAPPRE:ULCUL + CAPPRM:ASME + FREQ:60HZ + MOVOL:460V) + COOL:WATER **(05/02/2020 - ...)** ((((CAPPRM:AS1210 , CAPPRM:CE , CAPPRM:MHLW , CAPPRM:MOM) + MOVOL:400V , CAPPRM:CE + COOL:AIR + MOVOL:500V) + FREQ:50HZ , (CAPPRM:ASME , CAPPRM:MHLW) + FREQ:60HZ + MOVOL:460V) + CAPPRE:IEC , (COOL:AIR + MOVOL:575V , MOVOL:460V) + CAPPRE:ULCUL + CAPPRM:ASME + FREQ:60HZ)	2X28
	1088 0031 32	1	CONNECTOR	**(25/02/2019 - 04/02/2020)** (((CAPPRM:AS1210 , CAPPRM:CE , CAPPRM:MHLW , CAPPRM:MOM) + FREQ:50HZ + MOVOL:400V , (CAPPRM:ASME , CAPPRM:MHLW) + FREQ:60HZ + MOVOL:460V) + CAPPRE:IEC , CAPPRE:ULCUL + CAPPRM:ASME + FREQ:60HZ + MOVOL:460V) + COOL:WATER **(05/02/2020 - ...)** ((((CAPPRM:AS1210 , CAPPRM:CE , CAPPRM:MHLW , CAPPRM:MOM) + MOVOL:400V , CAPPRM:CE + COOL:AIR + MOVOL:500V) + FREQ:50HZ , (CAPPRM:ASME , CAPPRM:MHLW) + FREQ:60HZ + MOVOL:460V) + CAPPRE:IEC , (COOL:AIR + MOVOL:575V , MOVOL:460V) + CAPPRE:ULCUL + CAPPRM:ASME + FREQ:60HZ)	2X30

Legend:

CAPPRE:IEC - Component approval electrical:IEC
CAPPRE:ULCUL - Component approval electrical:UL/cUL
CAPPRM:AS1210 - Component approval mechanical:AS1210
CAPPRM:ASME - Component approval mechanical:ASME
CAPPRM:CE - Component approval mechanical:CE
CAPPRM:MHLW - Component approval mechanical:MHLW
CAPPRM:MOM - Component approval mechanical:MOM
COOL:AIR - Cooling:Air cooled
COOL:WATER - Cooling:Water cooled
FREQ:50HZ - Frequency:50 Hz
FREQ:60HZ - Frequency:60 Hz
IDRY:Y - Integrated dryer:Yes
MODEL:GA110VP_16 - Model:GA 110VSD+
MOVOL:200V - Supply voltage:200 V
MOVOL:230V - Supply voltage:230 V
MOVOL:400V - Supply voltage:400 V
MOVOL:460V - Supply voltage:460 V
MOVOL:500V - Supply voltage:500 V
MOVOL:575V - Supply voltage:575 V

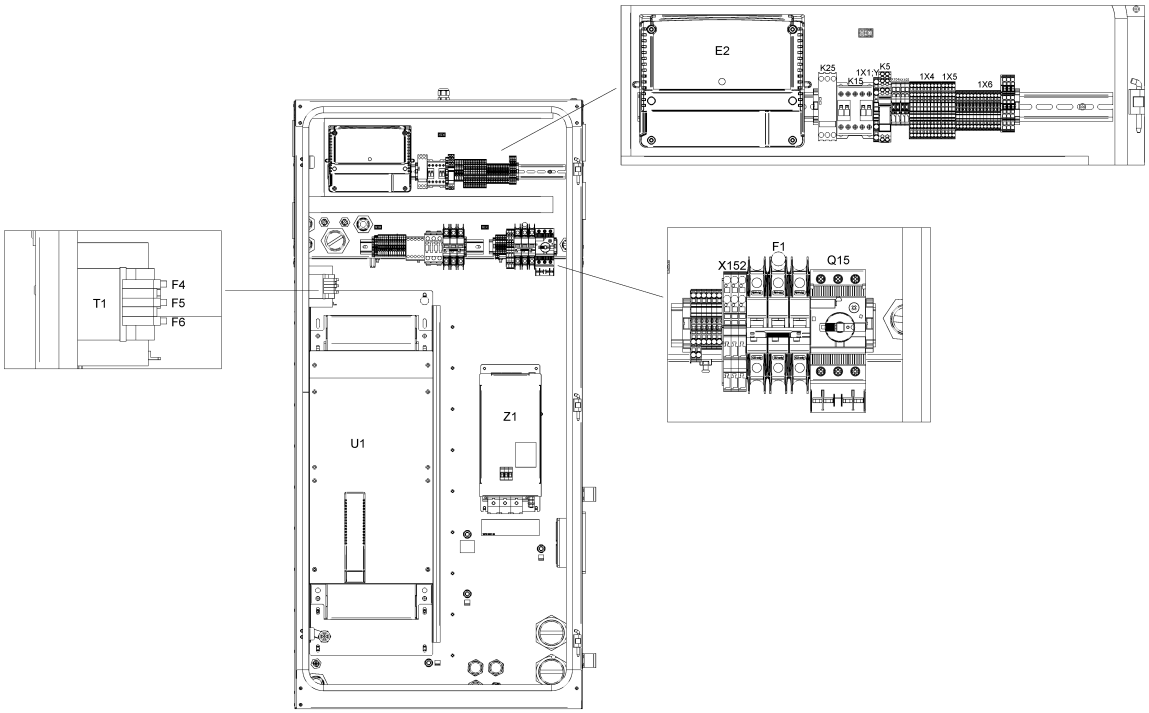
E2
K25
K15
1X1
K5
1X4
1X5
1X6
T1
F4
F5
F6
X152
F1
Q15
U1
Z1

21.28 - Cubicle components GA 110 VSD+ - (200V-400V-500V/50Hz, 460V/60Hz - IEC, 230V-460V-575V/60Hz - UL-cUL) - Full-Feature (05/02/2020 - ...)

(((MOVOL:200V , MOVOL:400V , MOVOL:500V) + FREQ:50HZ , FREQ:60HZ + MOVOL:460V) + CAPPRE:IEC , (MOVOL:230V , MOVOL:460V , MOVOL:575V) + CAPPRE:ULCUL + FREQ:60HZ) + IDRY:Y + MODEL:GA110VP_16

Ref	Part Number	Qty	Name	Validity	EL
	1088 0031 26	1	CONNECTOR 6-POLE	**(25/02/2019 - 04/02/2020)** (((CAPPRM:AS1210 , CAPPRM:CE , CAPPRM:MHLW , CAPPRM:MOM) + FREQ:50HZ + MOVOL:400V , (CAPPRM:ASME , CAPPRM:MHLW) + FREQ:60HZ + MOVOL:460V) + CAPPRE:IEC , CAPPRE:ULCUL + CAPPRM:ASME + FREQ:60HZ + MOVOL:460V) + COOL:WATER **(05/02/2020 - ...)** ((((CAPPRM:AS1210 , CAPPRM:CE , CAPPRM:MHLW , CAPPRM:MOM) + MOVOL:400V , CAPPRM:CE + COOL:AIR + MOVOL:500V) + FREQ:50HZ , (CAPPRM:ASME , CAPPRM:MHLW) + FREQ:60HZ + MOVOL:460V) + CAPPRE:IEC , (COOL:AIR + MOVOL:575V , MOVOL:460V) + CAPPRE:ULCUL + CAPPRM:ASME + FREQ:60HZ)	2X31
	~~1089 9664 06~~	1	SWITCH	**(25/02/2019 - 04/02/2020)** (((CAPPRM:AS1210 , CAPPRM:CE , CAPPRM:MHLW , CAPPRM:MOM) + FREQ:50HZ + MOVOL:400V , (CAPPRM:ASME , CAPPRM:MHLW) + FREQ:60HZ + MOVOL:460V) + CAPPRE:IEC , CAPPRE:ULCUL + CAPPRM:ASME + FREQ:60HZ + MOVOL:460V) + COOL:WATER **(05/02/2020 - ...)** ((((CAPPRM:AS1210 , CAPPRM:CE , CAPPRM:MHLW , CAPPRM:MOM) + MOVOL:400V , CAPPRM:CE + COOL:AIR + MOVOL:500V) + FREQ:50HZ , (CAPPRM:ASME , CAPPRM:MHLW) + FREQ:60HZ + MOVOL:460V) + CAPPRE:IEC , (COOL:AIR + MOVOL:575V , MOVOL:460V) + CAPPRE:ULCUL + CAPPRM:ASME + FREQ:60HZ)	Q15
	Substituted by:	1089 9551 97 - AUX.CONTACT CIRCUIT BREAKER (quantity: 1)			
	1089 9551 19	1	CIRCUIT BREAKER	**(25/02/2019 - 04/02/2020)** (((CAPPRM:AS1210 , CAPPRM:CE , CAPPRM:MHLW , CAPPRM:MOM) + FREQ:50HZ + MOVOL:400V , (CAPPRM:ASME , CAPPRM:MHLW) + FREQ:60HZ + MOVOL:460V) + CAPPRE:IEC , CAPPRE:ULCUL + CAPPRM:ASME + FREQ:60HZ + MOVOL:460V) + COOL:WATER **(05/02/2020 - ...)** ((((CAPPRM:AS1210 , CAPPRM:CE , CAPPRM:MHLW , CAPPRM:MOM) + MOVOL:400V , CAPPRM:CE + COOL:AIR + MOVOL:500V) + FREQ:50HZ , (CAPPRM:ASME , CAPPRM:MHLW) + FREQ:60HZ + MOVOL:460V) + CAPPRE:IEC , (COOL:AIR + MOVOL:575V , MOVOL:460V) + CAPPRE:ULCUL + CAPPRM:ASME + FREQ:60HZ)	Q15
	1088 0038 26	1	TERMINAL	**(25/02/2019 - 04/02/2020)** (((CAPPRM:AS1210 , CAPPRM:CE , CAPPRM:MHLW , CAPPRM:MOM) + FREQ:50HZ + MOVOL:400V , (CAPPRM:ASME , CAPPRM:MHLW) + FREQ:60HZ + MOVOL:460V) + CAPPRE:IEC , CAPPRE:ULCUL + CAPPRM:ASME + FREQ:60HZ + MOVOL:460V) + COOL:WATER **(05/02/2020 - ...)** ((((CAPPRM:AS1210 , CAPPRM:CE , CAPPRM:MHLW , CAPPRM:MOM) + MOVOL:400V , CAPPRM:CE + COOL:AIR + MOVOL:500V) + FREQ:50HZ , (CAPPRM:ASME , CAPPRM:MHLW) + FREQ:60HZ + MOVOL:460V) + CAPPRE:IEC , (COOL:AIR + MOVOL:575V , MOVOL:460V) + CAPPRE:ULCUL + CAPPRM:ASME + FREQ:60HZ)	1X1:Y/D

Legend:

CAPPRE:IEC - Component approval electrical:IEC
CAPPRM:ASME - Component approval mechanical:ASME
CAPPRM:MOM - Component approval mechanical:MOM
FREQ:50HZ - Frequency:50 Hz
MODEL:GA110VP_16 - Model:GA 110VSD+
MOVOL:400V - Supply voltage:400 V
MOVOL:575V - Supply voltage:575 V
CAPPRE:ULCUL - Component approval electrical:UL/cUL
CAPPRM:CE - Component approval mechanical:CE
COOL:AIR - Cooling:Air cooled
FREQ:60HZ - Frequency:60 Hz
MOVOL:200V - Supply voltage:200 V
MOVOL:460V - Supply voltage:460 V
CAPPRM:AS1210 - Component approval mechanical:AS1210
CAPPRM:MHLW - Component approval mechanical:MHLW
COOL:WATER - Cooling:Water cooled
IDRY:Y - Integrated dryer:Yes
MOVOL:230V - Supply voltage:230 V
MOVOL:500V - Supply voltage:500 V

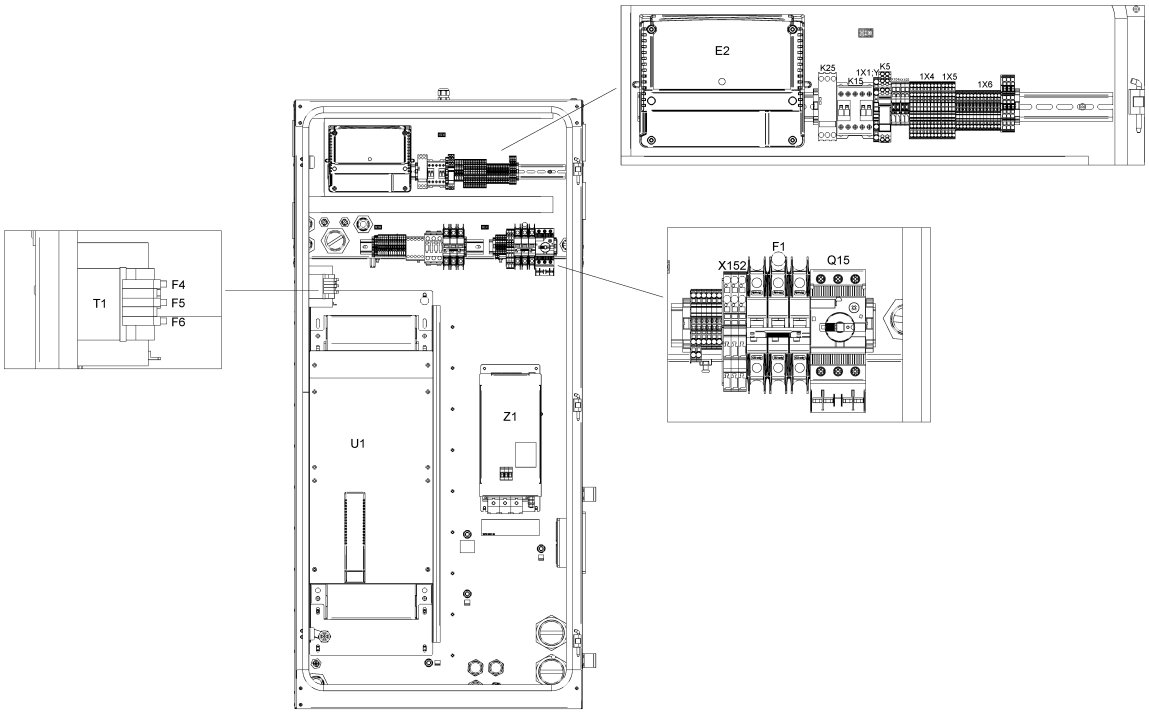
E2
K25
K15
1X1
K5
1X4
1X5
1X6
T1
F4
F5
F6
X152
F1
Q15
U1
Z1

21.28 - Cubicle components GA 110 VSD+ - (200V-400V-500V/50Hz, 460V/60Hz - IEC, 230V-460V-575V/60Hz - UL-cUL) - Full-Feature (05/02/2020 - ...)

(((MOVOL:200V , MOVOL:400V , MOVOL:500V) + FREQ:50HZ , FREQ:60HZ + MOVOL:460V) + CAPPRE:IEC , (MOVOL:230V , MOVOL:460V , MOVOL:575V) + CAPPRE:ULCUL + FREQ:60HZ) + IDRY:Y + MODEL:GA110VP_16

Ref	Part Number	Qty	Name	Validity	EL
	1089 9602 79	1	CONTACTOR 110 V	**(25/02/2019 - 04/02/2020)** (((CAPPRM:AS1210 , CAPPRM:CE , CAPPRM:MHLW , CAPPRM:MOM) + FREQ:50HZ + MOVOL:400V , (CAPPRM:ASME , CAPPRM:MHLW) + FREQ:60HZ + MOVOL:460V) + CAPPRE:IEC , CAPPRE:ULCUL + CAPPRM:ASME + FREQ:60HZ + MOVOL:460V) + COOL:WATER **(05/02/2020 - ...)** ((((CAPPRM:AS1210 , CAPPRM:CE , CAPPRM:MHLW , CAPPRM:MOM) + MOVOL:400V , CAPPRM:CE + COOL:AIR + MOVOL:500V) + FREQ:50HZ , (CAPPRM:ASME , CAPPRM:MHLW) + FREQ:60HZ + MOVOL:460V) + CAPPRE:IEC , (COOL:AIR + MOVOL:575V , MOVOL:460V) + CAPPRE:ULCUL + CAPPRM:ASME + FREQ:60HZ)	K15
	1089 9461 26	1	PHASE SEQUENCE RELAY	**(25/02/2019 - 04/02/2020)** (((CAPPRM:AS1210 , CAPPRM:CE , CAPPRM:MHLW , CAPPRM:MOM) + FREQ:50HZ + MOVOL:400V , (CAPPRM:ASME , CAPPRM:MHLW) + FREQ:60HZ + MOVOL:460V) + CAPPRE:IEC , CAPPRE:ULCUL + CAPPRM:ASME + FREQ:60HZ + MOVOL:460V) + COOL:WATER **(05/02/2020 - ...)** ((((CAPPRM:AS1210 , CAPPRM:CE , CAPPRM:MHLW , CAPPRM:MOM) + MOVOL:400V , CAPPRM:CE + COOL:AIR + MOVOL:500V) + FREQ:50HZ , (CAPPRM:ASME , CAPPRM:MHLW) + FREQ:60HZ + MOVOL:460V) + CAPPRE:IEC , (COOL:AIR + MOVOL:575V , MOVOL:460V) + CAPPRE:ULCUL + CAPPRM:ASME + FREQ:60HZ)	K25
	1088 0032 17	1	RELAY 115 VAC	**(25/02/2019 - 04/02/2020)** (((CAPPRM:AS1210 , CAPPRM:CE , CAPPRM:MHLW , CAPPRM:MOM) + FREQ:50HZ + MOVOL:400V , (CAPPRM:ASME , CAPPRM:MHLW) + FREQ:60HZ + MOVOL:460V) + CAPPRE:IEC , CAPPRE:ULCUL + CAPPRM:ASME + FREQ:60HZ + MOVOL:460V) + COOL:WATER **(05/02/2020 - ...)** ((((CAPPRM:AS1210 , CAPPRM:CE , CAPPRM:MHLW , CAPPRM:MOM) + MOVOL:400V , CAPPRM:CE + COOL:AIR + MOVOL:500V) + FREQ:50HZ , (CAPPRM:ASME , CAPPRM:MHLW) + FREQ:60HZ + MOVOL:460V) + CAPPRE:IEC , (COOL:AIR + MOVOL:575V , MOVOL:460V) + CAPPRE:ULCUL + CAPPRM:ASME + FREQ:60HZ)	K5
	0991 8011 21	AR	CABLE TRAY	**(25/02/2019 - 04/02/2020)** (((CAPPRM:AS1210 , CAPPRM:CE , CAPPRM:MHLW , CAPPRM:MOM) + FREQ:50HZ + MOVOL:400V , (CAPPRM:ASME , CAPPRM:MHLW) + FREQ:60HZ + MOVOL:460V) + CAPPRE:IEC , CAPPRE:ULCUL + CAPPRM:ASME + FREQ:60HZ + MOVOL:460V) + COOL:WATER **(05/02/2020 - ...)** ((((CAPPRM:AS1210 , CAPPRM:CE , CAPPRM:MHLW , CAPPRM:MOM) + MOVOL:400V , CAPPRM:CE + COOL:AIR + MOVOL:500V) + FREQ:50HZ , (CAPPRM:ASME , CAPPRM:MHLW) + FREQ:60HZ + MOVOL:460V) + CAPPRE:IEC , (COOL:AIR + MOVOL:575V , MOVOL:460V) + CAPPRE:ULCUL + CAPPRM:ASME + FREQ:60HZ)	L=1384mm

Legend:

CAPPRE:IEC - Component approval electrical:IEC
CAPPRE:ULCUL - Component approval electrical:UL/cUL
CAPPRM:AS1210 - Component approval mechanical:AS1210
CAPPRM:ASME - Component approval mechanical:ASME
CAPPRM:CE - Component approval mechanical:CE
CAPPRM:MHLW - Component approval mechanical:MHLW
CAPPRM:MOM - Component approval mechanical:MOM
COOL:AIR - Cooling:Air cooled
COOL:WATER - Cooling:Water cooled
FREQ:50HZ - Frequency:50 Hz
FREQ:60HZ - Frequency:60 Hz
IDRY:Y - Integrated dryer:Yes
MODEL:GA110VP_16 - Model:GA 110VSD+
MOVOL:200V - Supply voltage:200 V
MOVOL:230V - Supply voltage:230 V
MOVOL:400V - Supply voltage:400 V
MOVOL:460V - Supply voltage:460 V
MOVOL:500V - Supply voltage:500 V
MOVOL:575V - Supply voltage:575 V

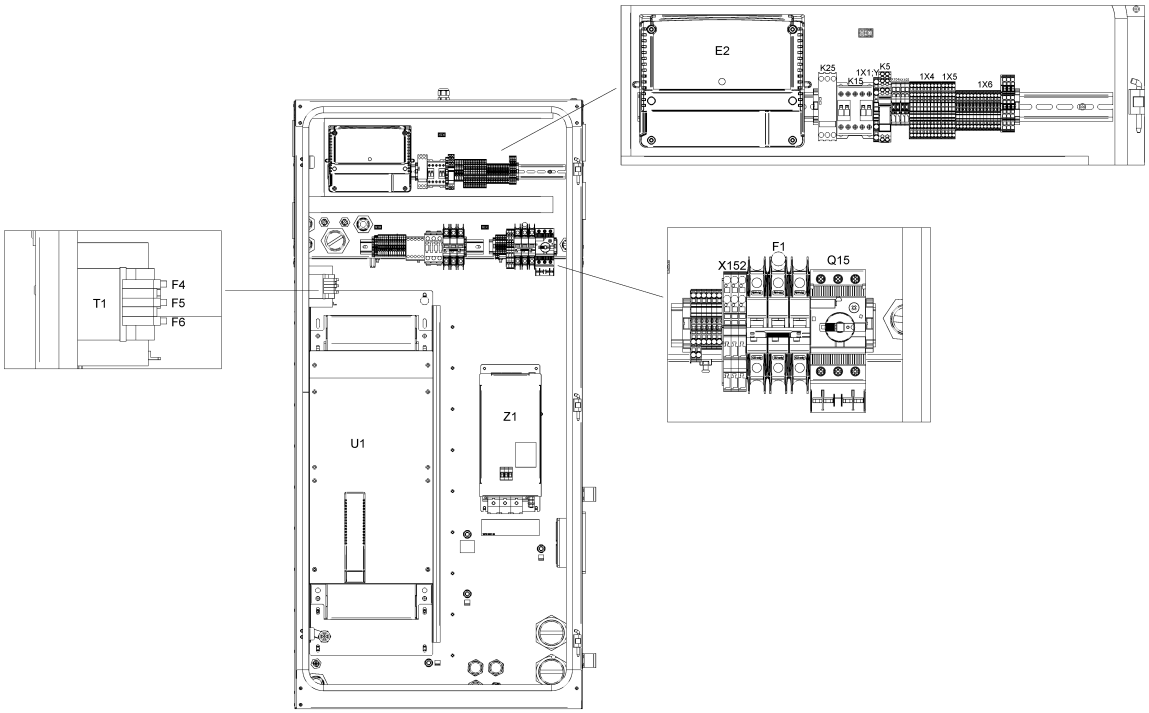
E2
K25
K15
1X1
K5
1X4
1X5
1X6
T1
F4
F5
F6
X152
F1
Q15
U1
Z1

21.28 - Cubicle components GA 110 VSD+ - (200V-400V-500V/50Hz, 460V/60Hz - IEC, 230V-460V-575V/60Hz - UL-cUL) - Full-Feature (05/02/2020 - ...)

(((MOVOL:200V , MOVOL:400V , MOVOL:500V) + FREQ:50HZ , FREQ:60HZ + MOVOL:460V) + CAPPRE:IEC , (MOVOL:230V , MOVOL:460V , MOVOL:575V) + CAPPRE:ULCUL + FREQ:60HZ) + IDRY:Y + MODEL:GA110VP_16

Ref	Part Number	Qty	Name	Validity	EL
	1900 2203 02	1	DRYER RAIL	**(25/02/2019 - 04/02/2020)** (((CAPPRM:AS1210 , CAPPRM:CE , CAPPRM:MHLW , CAPPRM:MOM) + FREQ:50HZ + MOVOL:400V , (CAPPRM:ASME , CAPPRM:MHLW) + FREQ:60HZ + MOVOL:460V) + CAPPRE:IEC , CAPPRE:ULCUL + CAPPRM:ASME + FREQ:60HZ + MOVOL:460V) + COOL:WATER **(05/02/2020 - ...)** ((((CAPPRM:AS1210 , CAPPRM:CE , CAPPRM:MHLW , CAPPRM:MOM) + MOVOL:400V , CAPPRM:CE + COOL:AIR + MOVOL:500V) + FREQ:50HZ , (CAPPRM:ASME , CAPPRM:MHLW) + FREQ:60HZ + MOVOL:460V) + CAPPRE:IEC , (COOL:AIR + MOVOL:575V , MOVOL:460V) + CAPPRE:ULCUL + CAPPRM:ASME + FREQ:60HZ)	
	Electrical legend:	Without trafo on dryer			
	1088 0031 13	1	CONNECTOR 13-POLE	**(25/02/2019 - 04/02/2020)** (((CAPPRM:AS1210 , CAPPRM:CE , CAPPRM:MHLW , CAPPRM:MOM) + FREQ:50HZ + MOVOL:400V , (CAPPRM:ASME , CAPPRM:MHLW) + FREQ:60HZ + MOVOL:460V) + CAPPRE:IEC , CAPPRE:ULCUL + CAPPRM:ASME + FREQ:60HZ + MOVOL:460V) + COOL:WATER **(05/02/2020 - ...)** ((((CAPPRM:AS1210 , CAPPRM:CE , CAPPRM:MHLW , CAPPRM:MOM) + MOVOL:400V , CAPPRM:CE + COOL:AIR + MOVOL:500V) + FREQ:50HZ , (CAPPRM:ASME , CAPPRM:MHLW) + FREQ:60HZ + MOVOL:460V) + CAPPRE:IEC , (COOL:AIR + MOVOL:575V , MOVOL:460V) + CAPPRE:ULCUL + CAPPRM:ASME + FREQ:60HZ)	1X30
	1088 0037 82	1	CONNECTOR	**(25/02/2019 - 04/02/2020)** (((CAPPRM:AS1210 , CAPPRM:CE , CAPPRM:MHLW , CAPPRM:MOM) + FREQ:50HZ + MOVOL:400V , (CAPPRM:ASME , CAPPRM:MHLW) + FREQ:60HZ + MOVOL:460V) + CAPPRE:IEC , CAPPRE:ULCUL + CAPPRM:ASME + FREQ:60HZ + MOVOL:460V) + COOL:WATER **(05/02/2020 - ...)** ((((CAPPRM:AS1210 , CAPPRM:CE , CAPPRM:MHLW , CAPPRM:MOM) + MOVOL:400V , CAPPRM:CE + COOL:AIR + MOVOL:500V) + FREQ:50HZ , (CAPPRM:ASME , CAPPRM:MHLW) + FREQ:60HZ + MOVOL:460V) + CAPPRE:IEC , (COOL:AIR + MOVOL:575V , MOVOL:460V) + CAPPRE:ULCUL + CAPPRM:ASME + FREQ:60HZ)	3X34
	0697 9811 13	1	PLUG	**(25/02/2019 - 04/02/2020)** (((CAPPRM:AS1210 , CAPPRM:CE , CAPPRM:MHLW , CAPPRM:MOM) + FREQ:50HZ + MOVOL:400V , (CAPPRM:ASME , CAPPRM:MHLW) + FREQ:60HZ + MOVOL:460V) + CAPPRE:IEC , CAPPRE:ULCUL + CAPPRM:ASME + FREQ:60HZ + MOVOL:460V) + COOL:WATER **(05/02/2020 - ...)** ((((CAPPRM:AS1210 , CAPPRM:CE , CAPPRM:MHLW , CAPPRM:MOM) + MOVOL:400V , CAPPRM:CE + COOL:AIR + MOVOL:500V) + FREQ:50HZ , (CAPPRM:ASME , CAPPRM:MHLW) + FREQ:60HZ + MOVOL:460V) + CAPPRE:IEC , (COOL:AIR + MOVOL:575V , MOVOL:460V) + CAPPRE:ULCUL + CAPPRM:ASME + FREQ:60HZ)	
	Electrical legend:	Energy recovery			

Legend:

CAPPRE:IEC - Component approval electrical:IEC
CAPPRM:ASME - Component approval mechanical:ASME
CAPPRM:MOM - Component approval mechanical:MOM
FREQ:50HZ - Frequency:50 Hz
MODEL:GA110VP_16 - Model:GA 110VSD+
MOVOL:400V - Supply voltage:400 V
MOVOL:575V - Supply voltage:575 V
CAPPRE:ULCUL - Component approval electrical:UL/cUL
CAPPRM:CE - Component approval mechanical:CE
COOL:AIR - Cooling:Air cooled
FREQ:60HZ - Frequency:60 Hz
MOVOL:200V - Supply voltage:200 V
MOVOL:460V - Supply voltage:460 V
CAPPRM:AS1210 - Component approval mechanical:AS1210
CAPPRM:MHLW - Component approval mechanical:MHLW
COOL:WATER - Cooling:Water cooled
IDRY:Y - Integrated dryer:Yes
MOVOL:230V - Supply voltage:230 V
MOVOL:500V - Supply voltage:500 V

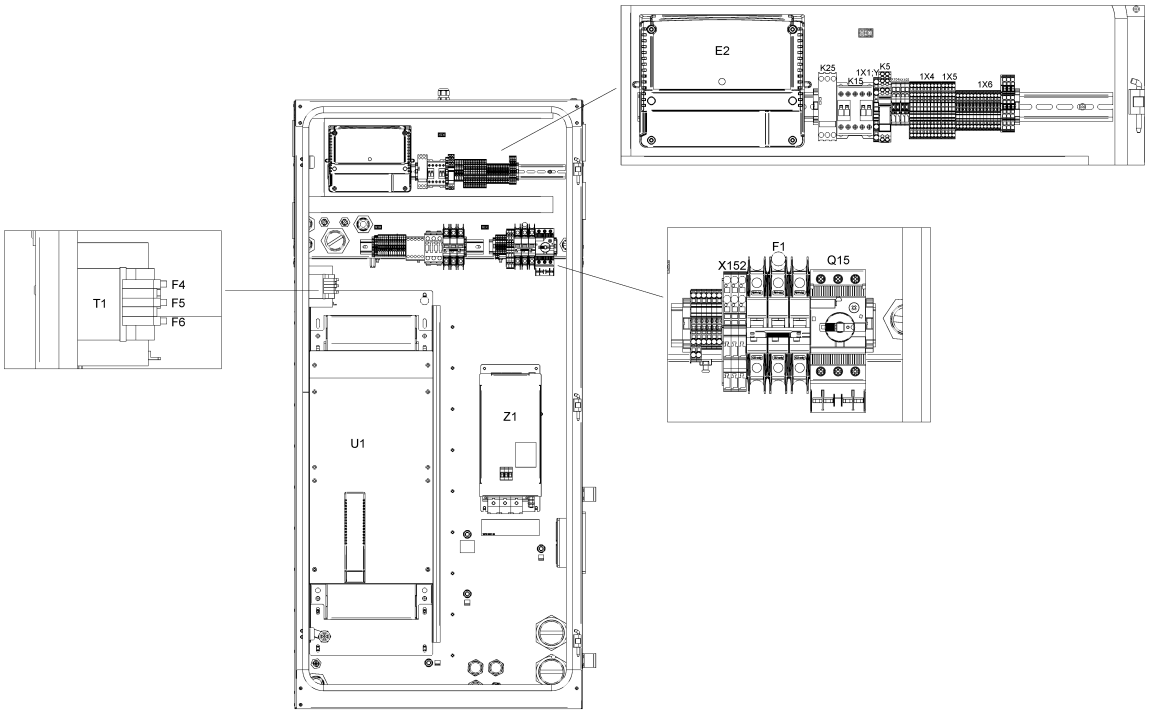
E2
K25
K15
1X1
K5
1X4
1X5
1X6
T1
F4
F5
F6
X152
F1
Q15
U1
Z1

21.28 - Cubicle components GA 110 VSD+ - (200V-400V-500V/50Hz, 460V/60Hz - IEC, 230V-460V-575V/60Hz - UL-cUL) - Full-Feature (05/02/2020 - ...)

(((MOVOL:200V , MOVOL:400V , MOVOL:500V) + FREQ:50HZ , FREQ:60HZ + MOVOL:460V) + CAPPRE:IEC , (MOVOL:230V , MOVOL:460V , MOVOL:575V) + CAPPRE:ULCUL + FREQ:60HZ) + IDRY:Y + MODEL:GA110VP_16

Ref	Part Number	Qty	Name	Validity	EL
	0989 3700 44	1	LOCKNUT	**(25/02/2019 - 04/02/2020)** (((CAPPRM:AS1210 , CAPPRM:CE , CAPPRM:MHLW , CAPPRM:MOM) + FREQ:50HZ + MOVOL:400V , (CAPPRM:ASME , CAPPRM:MHLW) + FREQ:60HZ + MOVOL:460V) + CAPPRE:IEC , CAPPRE:ULCUL + CAPPRM:ASME + FREQ:60HZ + MOVOL:460V) + COOL:WATER **(05/02/2020 - ...)** ((((CAPPRM:AS1210 , CAPPRM:CE , CAPPRM:MHLW , CAPPRM:MOM) + MOVOL:400V , CAPPRM:CE + COOL:AIR + MOVOL:500V) + FREQ:50HZ , (CAPPRM:ASME , CAPPRM:MHLW) + FREQ:60HZ + MOVOL:460V) + CAPPRE:IEC , (COOL:AIR + MOVOL:575V , MOVOL:460V) + CAPPRE:ULCUL + CAPPRM:ASME + FREQ:60HZ)	
	Electrical legend:	Energy recovery			
	0697 9811 12	1	PLUG	**(25/02/2019 - 04/02/2020)** (((CAPPRM:AS1210 , CAPPRM:CE , CAPPRM:MHLW , CAPPRM:MOM) + FREQ:50HZ + MOVOL:400V , (CAPPRM:ASME , CAPPRM:MHLW) + FREQ:60HZ + MOVOL:460V) + CAPPRE:IEC , CAPPRE:ULCUL + CAPPRM:ASME + FREQ:60HZ + MOVOL:460V) + COOL:WATER **(05/02/2020 - ...)** ((((CAPPRM:AS1210 , CAPPRM:CE , CAPPRM:MHLW , CAPPRM:MOM) + MOVOL:400V , CAPPRM:CE + COOL:AIR + MOVOL:500V) + FREQ:50HZ , (CAPPRM:ASME , CAPPRM:MHLW) + FREQ:60HZ + MOVOL:460V) + CAPPRE:IEC , (COOL:AIR + MOVOL:575V , MOVOL:460V) + CAPPRE:ULCUL + CAPPRM:ASME + FREQ:60HZ)	
	Electrical legend:	Control circuit of T10			
	0989 3700 43	1	NUT	**(25/02/2019 - 04/02/2020)** (((CAPPRM:AS1210 , CAPPRM:CE , CAPPRM:MHLW , CAPPRM:MOM) + FREQ:50HZ + MOVOL:400V , (CAPPRM:ASME , CAPPRM:MHLW) + FREQ:60HZ + MOVOL:460V) + CAPPRE:IEC , CAPPRE:ULCUL + CAPPRM:ASME + FREQ:60HZ + MOVOL:460V) + COOL:WATER **(05/02/2020 - ...)** ((((CAPPRM:AS1210 , CAPPRM:CE , CAPPRM:MHLW , CAPPRM:MOM) + MOVOL:400V , CAPPRM:CE + COOL:AIR + MOVOL:500V) + FREQ:50HZ , (CAPPRM:ASME , CAPPRM:MHLW) + FREQ:60HZ + MOVOL:460V) + CAPPRE:IEC , (COOL:AIR + MOVOL:575V , MOVOL:460V) + CAPPRE:ULCUL + CAPPRM:ASME + FREQ:60HZ)	
	Electrical legend:	Control circuit of T10			
	0697 9811 10	1	PLUG	**(25/02/2019 - 04/02/2020)** (((CAPPRM:AS1210 , CAPPRM:CE , CAPPRM:MHLW , CAPPRM:MOM) + FREQ:50HZ + MOVOL:400V , (CAPPRM:ASME , CAPPRM:MHLW) + FREQ:60HZ + MOVOL:460V) + CAPPRE:IEC , CAPPRE:ULCUL + CAPPRM:ASME + FREQ:60HZ + MOVOL:460V) + COOL:WATER **(05/02/2020 - ...)** ((((CAPPRM:AS1210 , CAPPRM:CE , CAPPRM:MHLW , CAPPRM:MOM) + MOVOL:400V , CAPPRM:CE + COOL:AIR + MOVOL:500V) + FREQ:50HZ , (CAPPRM:ASME , CAPPRM:MHLW) + FREQ:60HZ + MOVOL:460V) + CAPPRE:IEC , (COOL:AIR + MOVOL:575V , MOVOL:460V) + CAPPRE:ULCUL + CAPPRM:ASME + FREQ:60HZ)	
	Electrical legend:	Plug for smartbox hole			

Legend:

CAPPRE:IEC - Component approval electrical:IEC
CAPPRM:ASME - Component approval mechanical:ASME
CAPPRM:MOM - Component approval mechanical:MOM
FREQ:50HZ - Frequency:50 Hz
MODEL:GA110VP_16 - Model:GA 110VSD+
MOVOL:400V - Supply voltage:400 V
MOVOL:575V - Supply voltage:575 V
CAPPRE:ULCUL - Component approval electrical:UL/cUL
CAPPRM:CE - Component approval mechanical:CE
COOL:AIR - Cooling:Air cooled
FREQ:60HZ - Frequency:60 Hz
MOVOL:200V - Supply voltage:200 V
MOVOL:460V - Supply voltage:460 V
CAPPRM:AS1210 - Component approval mechanical:AS1210
CAPPRM:MHLW - Component approval mechanical:MHLW
COOL:WATER - Cooling:Water cooled
IDRY:Y - Integrated dryer:Yes
MOVOL:230V - Supply voltage:230 V
MOVOL:500V - Supply voltage:500 V

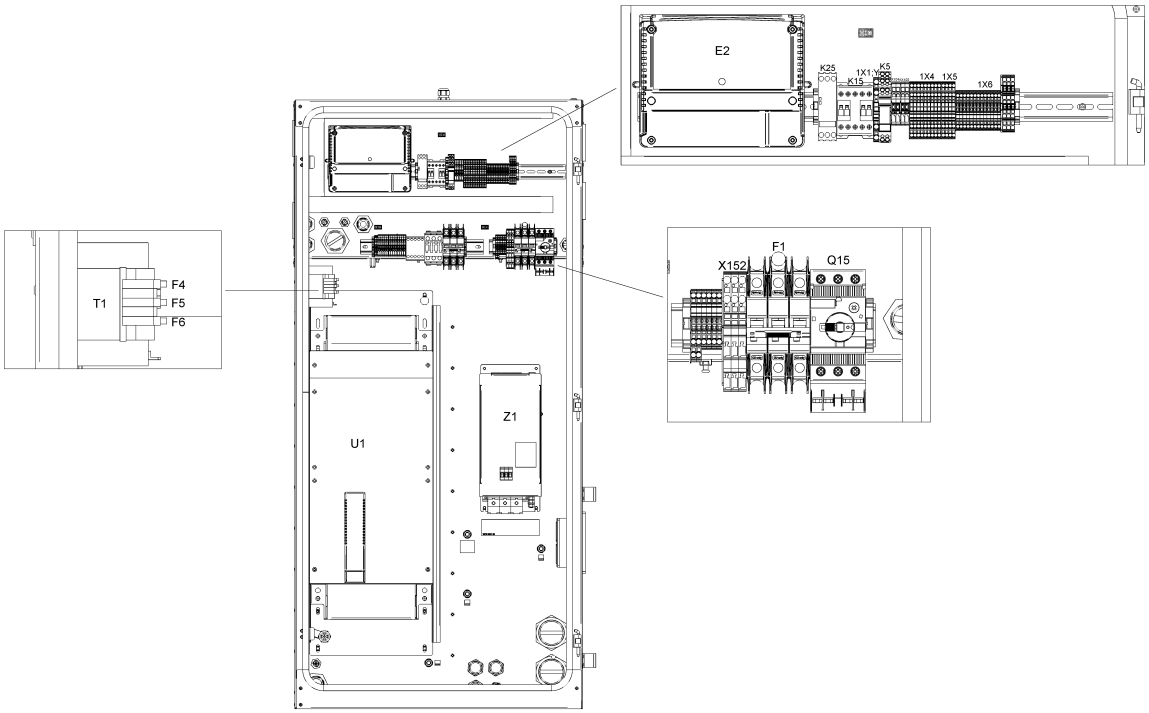
E2
K25
K15
1X1
K5
1X4
1X5
1X6
T1
F4
F5
F6
X152
F1
Q15
U1
Z1

21.28 - Cubicle components GA 110 VSD+ - (200V-400V-500V/50Hz, 460V/60Hz - IEC, 230V-460V-575V/60Hz - UL-cUL) - Full-Feature (05/02/2020 - ...)

(((MOVOL:200V , MOVOL:400V , MOVOL:500V) + FREQ:50HZ , FREQ:60HZ + MOVOL:460V) + CAPPRE:IEC , (MOVOL:230V , MOVOL:460V , MOVOL:575V) + CAPPRE:ULCUL + FREQ:60HZ) + IDRY:Y + MODEL:GA110VP_16

Ref	Part Number	Qty	Name	Validity	EL
	0989 3700 41	1	LOCKNUT	**(25/02/2019 - 04/02/2020)** (((CAPPRM:AS1210 , CAPPRM:CE , CAPPRM:MHLW , CAPPRM:MOM) + FREQ:50HZ + MOVOL:400V , (CAPPRM:ASME , CAPPRM:MHLW) + FREQ:60HZ + MOVOL:460V) + CAPPRE:IEC , CAPPRE:ULCUL + CAPPRM:ASME + FREQ:60HZ + MOVOL:460V) + COOL:WATER **(05/02/2020 - ...)** ((((CAPPRM:AS1210 , CAPPRM:CE , CAPPRM:MHLW , CAPPRM:MOM) + MOVOL:400V , CAPPRM:CE + COOL:AIR + MOVOL:500V) + FREQ:50HZ , (CAPPRM:ASME , CAPPRM:MHLW) + FREQ:60HZ + MOVOL:460V) + CAPPRE:IEC , (COOL:AIR + MOVOL:575V , MOVOL:460V) + CAPPRE:ULCUL + CAPPRM:ASME + FREQ:60HZ)	
	Electrical legend:	Nut for smartbox hole			
	1089 9556 37	1	AIR INLET WITH FILTER	**(25/02/2019 - 04/02/2020)** (((CAPPRM:AS1210 , CAPPRM:CE , CAPPRM:MHLW , CAPPRM:MOM) + FREQ:50HZ + MOVOL:400V , (CAPPRM:ASME , CAPPRM:MHLW) + FREQ:60HZ + MOVOL:460V) + CAPPRE:IEC , CAPPRE:ULCUL + CAPPRM:ASME + FREQ:60HZ + MOVOL:460V) + COOL:WATER **(05/02/2020 - ...)** ((((CAPPRM:AS1210 , CAPPRM:CE , CAPPRM:MHLW , CAPPRM:MOM) + MOVOL:400V , CAPPRM:CE + COOL:AIR + MOVOL:500V) + FREQ:50HZ , (CAPPRM:ASME , CAPPRM:MHLW) + FREQ:60HZ + MOVOL:460V) + CAPPRE:IEC , (COOL:AIR + MOVOL:575V , MOVOL:460V) + CAPPRE:ULCUL + CAPPRM:ASME + FREQ:60HZ)	Fan Filter

Legend:

CAPPRE:IEC - Component approval electrical:IEC
CAPPRE:ULCUL - Component approval electrical:UL/cUL
CAPPRM:AS1210 - Component approval mechanical:AS1210
CAPPRM:ASME - Component approval mechanical:ASME
CAPPRM:CE - Component approval mechanical:CE
CAPPRM:MHLW - Component approval mechanical:MHLW
CAPPRM:MOM - Component approval mechanical:MOM
COOL:AIR - Cooling:Air cooled
COOL:WATER - Cooling:Water cooled
FREQ:50HZ - Frequency:50 Hz
FREQ:60HZ - Frequency:60 Hz
IDRY:Y - Integrated dryer:Yes
MODEL:GA110VP_16 - Model:GA 110VSD+
MOVOL:200V - Supply voltage:200 V
MOVOL:230V - Supply voltage:230 V
MOVOL:400V - Supply voltage:400 V
MOVOL:460V - Supply voltage:460 V
MOVOL:500V - Supply voltage:500 V
MOVOL:575V - Supply voltage:575 V

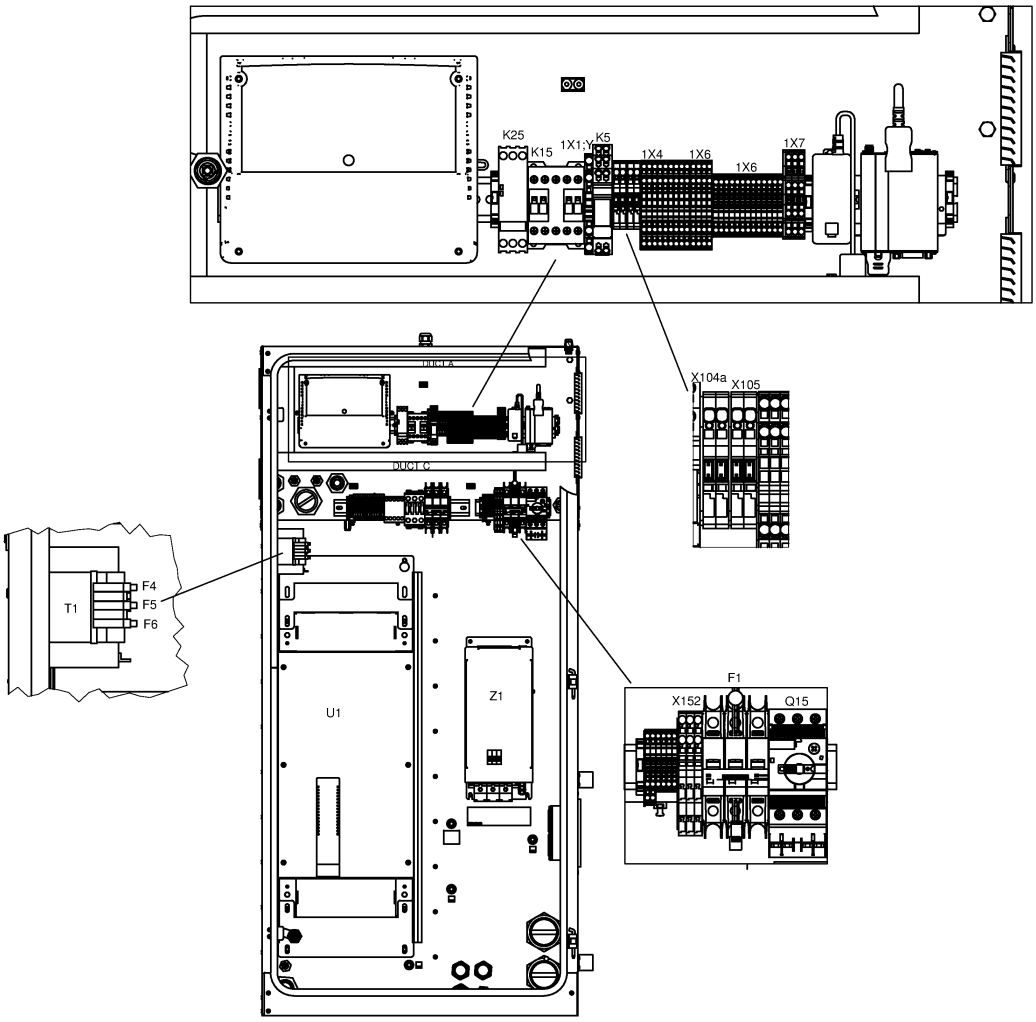
K25
K15
1X1:Y
K5
1X4
1X6
1X6
1X7
DUCT A
DUCT C
X104a
X105
T1
F4
F5
F6
U1
Z1
F1
X152
Q15

21.29 - Cubicle components GA 110 VSD+ - 200V-380V/60Hz - IEC - Full-Feature (20/07/2017 - 11/12/2018)

(MOVOL:200V , MOVOL:380V) + CAPPRE:IEC + FREQ:60HZ + IDRY:Y + MODEL:GA110VP_16

Ref	Part Number	Qty	Name	Validity	EL
	1900 2202 15	1	CUBICLE		
	9820 3000 21	-	CUBICLE LAYOUT	**(20/07/2017 - 20/08/2018)** (CAPPRM:ASME + MOVOL:380V , CAPPRM:MHLW + MOVOL:200V) + COOL:AIR **(21/08/2018 - 11/12/2018)** (CAPPRM:ASME + MOVOL:380V , CAPPRM:MHLW + COOL:AIR + MOVOL:200V)	-
	9820 3000 22	-	SERVICE DIAGRAM	**(20/07/2017 - 20/08/2018)** (CAPPRM:ASME + MOVOL:380V , CAPPRM:MHLW + MOVOL:200V) + COOL:AIR **(21/08/2018 - 11/12/2018)** (CAPPRM:ASME + MOVOL:380V , CAPPRM:MHLW + COOL:AIR + MOVOL:200V)	-
	1622 3798 70	1	WIRE HARNESS COMM CABLE	**(20/07/2017 - 20/08/2018)** (CAPPRM:ASME + MOVOL:380V , CAPPRM:MHLW + MOVOL:200V) + COOL:AIR **(21/08/2018 - 11/12/2018)** (CAPPRM:ASME + MOVOL:380V , CAPPRM:MHLW + COOL:AIR + MOVOL:200V)	-
	1622 5099 04	1	DI CHANE CABLE (1400MM)	**(20/07/2017 - 20/08/2018)** (CAPPRM:ASME + MOVOL:380V , CAPPRM:MHLW + MOVOL:200V) + COOL:AIR **(21/08/2018 - 11/12/2018)** (CAPPRM:ASME + MOVOL:380V , CAPPRM:MHLW + COOL:AIR + MOVOL:200V)	
	Electrical legend:	Comm Cable Loose supply			
	1649 8001 22	1	CUBICLE	**(20/07/2017 - 20/08/2018)** (CAPPRM:ASME + MOVOL:380V , CAPPRM:MHLW + MOVOL:200V) + COOL:AIR **(21/08/2018 - 11/12/2018)** (CAPPRM:ASME + MOVOL:380V , CAPPRM:MHLW + COOL:AIR + MOVOL:200V)	-
•	1202 6584 02	AR	SEAL		-
	1649 8001 31	1	PLATE NEOS "E"	**(20/07/2017 - 20/08/2018)** (CAPPRM:ASME + MOVOL:380V , CAPPRM:MHLW + MOVOL:200V) + COOL:AIR **(21/08/2018 - 11/12/2018)** (CAPPRM:ASME + MOVOL:380V , CAPPRM:MHLW + COOL:AIR + MOVOL:200V)	-
	1649 8003 85	1	MOUNTING PLATE	**(20/07/2017 - 20/08/2018)** (CAPPRM:ASME + MOVOL:380V , CAPPRM:MHLW + MOVOL:200V) + COOL:AIR **(21/08/2018 - 11/12/2018)** (CAPPRM:ASME + MOVOL:380V , CAPPRM:MHLW + COOL:AIR + MOVOL:200V)	-
	1649 8002 39	1	WIRE HARNESS	**(20/07/2017 - 20/08/2018)** (CAPPRM:ASME + MOVOL:380V , CAPPRM:MHLW + MOVOL:200V) + COOL:AIR **(21/08/2018 - 11/12/2018)** (CAPPRM:ASME + MOVOL:380V , CAPPRM:MHLW + COOL:AIR + MOVOL:200V)	
	Electrical legend:	Pressure switch (vessel) + pressure sensor vessel + pressure sensor outlet			
•	0698 5140 74	1	CABLE GLAND		
	1649 8002 40	1	WIRE HARNESS	**(20/07/2017 - 20/08/2018)** (CAPPRM:ASME + MOVOL:380V , CAPPRM:MHLW + MOVOL:200V) + COOL:AIR **(21/08/2018 - 11/12/2018)** (CAPPRM:ASME + MOVOL:380V , CAPPRM:MHLW + COOL:AIR + MOVOL:200V)	
	Electrical legend:	Temperature switch element outlet + solenoids + ambient sensor			
•	0698 5140 74	1	CABLE GLAND		
	1649 8002 72	1	CABLE POWER	**(20/07/2017 - 20/08/2018)** (CAPPRM:ASME + MOVOL:380V , CAPPRM:MHLW + MOVOL:200V) + COOL:AIR **(21/08/2018 - 11/12/2018)** (CAPPRM:ASME + MOVOL:380V , CAPPRM:MHLW + COOL:AIR + MOVOL:200V)	
	Electrical legend:	Full feature (FF) Drain			
	1649 8002 73	1	WIRE HARNESS	**(20/07/2017 - 20/08/2018)** (CAPPRM:ASME + MOVOL:380V , CAPPRM:MHLW + MOVOL:200V) + COOL:AIR **(21/08/2018 - 11/12/2018)** (CAPPRM:ASME + MOVOL:380V , CAPPRM:MHLW + COOL:AIR + MOVOL:200V)	

Legend:

CAPPRE:IEC - Component approval electrical:IEC
CAPPRM:ASME - Component approval mechanical:ASME
CAPPRM:MHLW - Component approval mechanical:MHLW
COOL:AIR - Cooling:Air cooled
FREQ:60HZ - Frequency:60 Hz
IDRY:Y - Integrated dryer:Yes
MODEL:GA110VP_16 - Model:GA 110VSD+
MOVOL:200V - Supply voltage:200 V
MOVOL:380V - Supply voltage:380 V

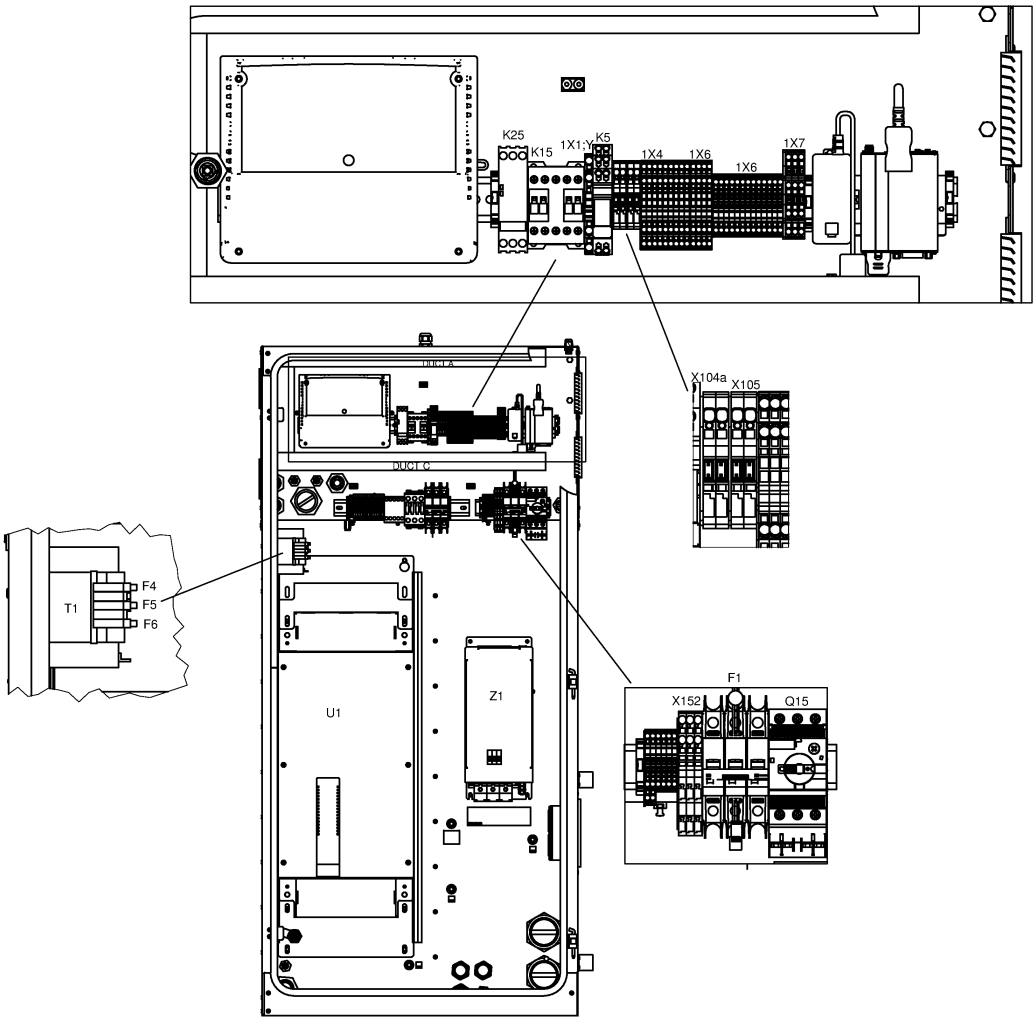
K25
K15
1X1:Y
K5
1X4
1X6
1X6
1X7
DUCT A
DUCT C
X104a
X105
T1
F4
F5
F6
U1
Z1
F1
X152
Q15

Ref	Part Number	Qty	Name	Validity	EL
	Electrical legend:	Pack Drain + Air filter switch			
	• 0698 5140 74	1	CABLE GLAND		
	1649 8002 75	1	WIRE HARNESS	**(20/07/2017 - 20/08/2018)** (CAPPRM:ASME + MOVOL:380V , CAPPRM:MHLW + MOVOL:200V) + COOL:AIR **(21/08/2018 - 11/12/2018)** (CAPPRM:ASME + MOVOL:380V , CAPPRM:MHLW + COOL:AIR + MOVOL:200V)	
	Electrical legend:	Relative Humidity sensor			
	• ~~1089 9320 09~~	1	RH SENSOR		
	Substituted by:	1089 9320 10 - TEMP. SENSOR (quantity: 1)			
	• 0698 5140 75	1	CABLE GLAND		
	1649 8001 43	3	MOTOR CABLE	**(20/07/2017 - 20/08/2018)** (CAPPRM:ASME + MOVOL:380V , CAPPRM:MHLW + MOVOL:200V) + COOL:AIR **(21/08/2018 - 11/12/2018)** (CAPPRM:ASME + MOVOL:380V , CAPPRM:MHLW + COOL:AIR + MOVOL:200V)	-
	1649 8001 46	1	MOTOR CABLE	**(20/07/2017 - 20/08/2018)** (CAPPRM:ASME + MOVOL:380V , CAPPRM:MHLW + MOVOL:200V) + COOL:AIR **(21/08/2018 - 11/12/2018)** (CAPPRM:ASME + MOVOL:380V , CAPPRM:MHLW + COOL:AIR + MOVOL:200V)	-
		1	DATA LABEL	**(20/07/2017 - 01/02/2018)** (CAPPRM:ASME + MOVOL:380V , CAPPRM:MHLW + MOVOL:200V) + COOL:AIR	-
		1	DATA LABEL	**(02/02/2018 - 20/08/2018)** (CAPPRM:ASME + MOVOL:380V , CAPPRM:MHLW + MOVOL:200V) + COOL:AIR **(21/08/2018 - 11/12/2018)** (CAPPRM:ASME + MOVOL:380V , CAPPRM:MHLW + COOL:AIR + MOVOL:200V)	-
	1079 9901 68	1	WARNING LABEL	**(20/07/2017 - 20/08/2018)** (CAPPRM:ASME + MOVOL:380V , CAPPRM:MHLW + MOVOL:200V) + COOL:AIR **(21/08/2018 - 11/12/2018)** (CAPPRM:ASME + MOVOL:380V , CAPPRM:MHLW + COOL:AIR + MOVOL:200V)	-
	1900 5350 18	1	INVERTER	**(20/07/2017 - 20/08/2018)** (CAPPRM:ASME + MOVOL:380V , CAPPRM:MHLW + MOVOL:200V) + COOL:AIR **(21/08/2018 - 11/12/2018)** (CAPPRM:ASME + MOVOL:380V , CAPPRM:MHLW + COOL:AIR + MOVOL:200V)	U1
	1631 2079 00	1	NANOPERMRING	**(20/07/2017 - 20/08/2018)** (CAPPRM:ASME + MOVOL:380V , CAPPRM:MHLW + MOVOL:200V) + COOL:AIR **(21/08/2018 - 11/12/2018)** (CAPPRM:ASME + MOVOL:380V , CAPPRM:MHLW + COOL:AIR + MOVOL:200V)	-
	0697 9811 17	2	PLUG	**(20/07/2017 - 20/08/2018)** (CAPPRM:ASME + MOVOL:380V , CAPPRM:MHLW + MOVOL:200V) + COOL:AIR **(21/08/2018 - 11/12/2018)** (CAPPRM:ASME + MOVOL:380V , CAPPRM:MHLW + COOL:AIR + MOVOL:200V)	
	Electrical legend:	Plug for transfo supply			
	0989 3700 48	2	NUT	**(20/07/2017 - 20/08/2018)** (CAPPRM:ASME + MOVOL:380V , CAPPRM:MHLW + MOVOL:200V) + COOL:AIR **(21/08/2018 - 11/12/2018)** (CAPPRM:ASME + MOVOL:380V , CAPPRM:MHLW + COOL:AIR + MOVOL:200V)	
	Electrical legend:	Nut for transfo supply			
	0698 5140 72	1	CABLE GLAND	**(20/07/2017 - 20/08/2018)** (CAPPRM:ASME + MOVOL:380V , CAPPRM:MHLW + MOVOL:200V) + COOL:AIR **(21/08/2018 - 11/12/2018)** (CAPPRM:ASME + MOVOL:380V , CAPPRM:MHLW + COOL:AIR + MOVOL:200V)	Fan

Legend:

CAPPRE:IEC - Component approval electrical:IEC
CAPPRM:ASME - Component approval mechanical:ASME
CAPPRM:MHLW - Component approval mechanical:MHLW
COOL:AIR - Cooling:Air cooled
FREQ:60HZ - Frequency:60 Hz
IDRY:Y - Integrated dryer:Yes
MODEL:GA110VP_16 - Model:GA 110VSD+
MOVOL:200V - Supply voltage:200 V
MOVOL:380V - Supply voltage:380 V

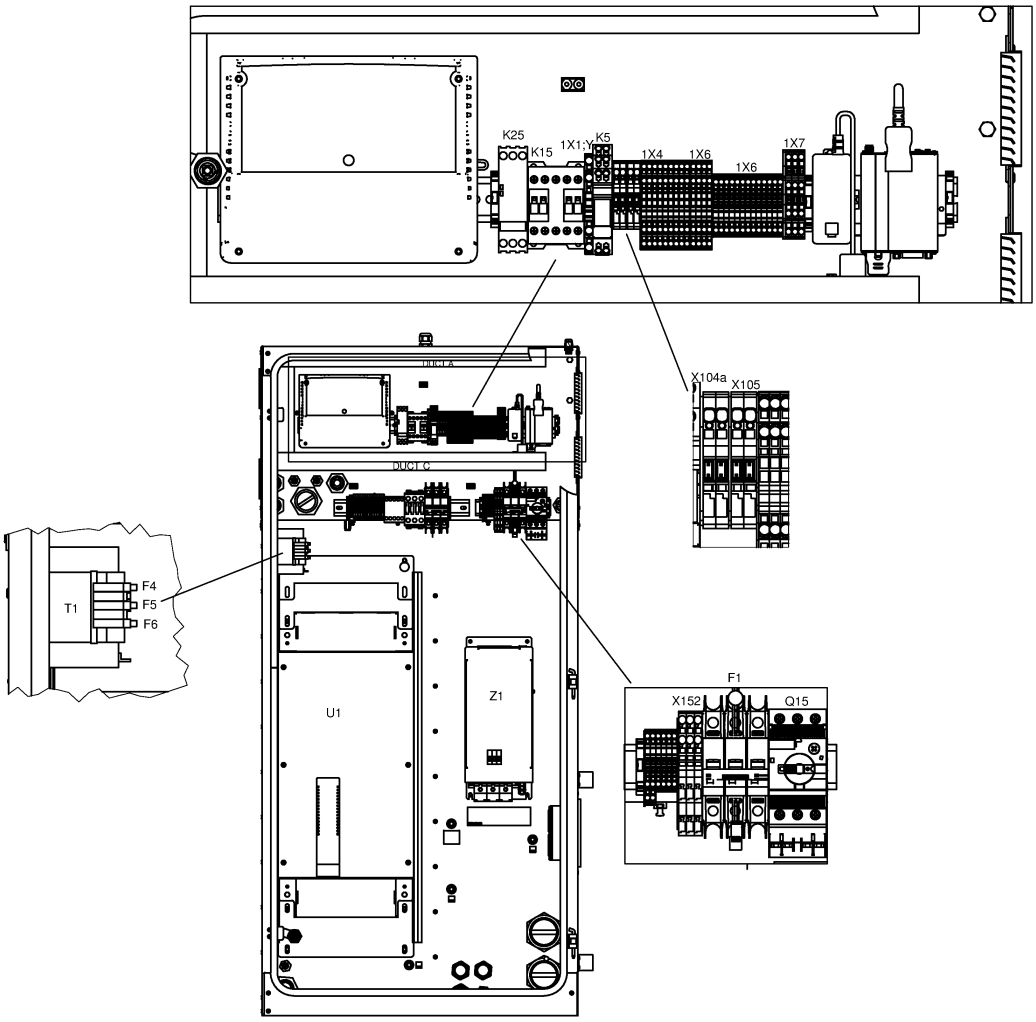
K25
K15
1X1:Y
K5
1X4
1X6
1X6
1X7
DUCT A
DUCT C
X104a
X105
T1
F4
F5
F6
U1
Z1
F1
X152
Q15

Ref	Part Number	Qty	Name	Validity	EL
	0698 5140 71	1	CABLE GLAND	**(20/07/2017 - 20/08/2018)** (CAPPRM:ASME + MOVOL:380V , CAPPRM:MHLW + MOVOL:200V) + COOL:AIR **(21/08/2018 - 11/12/2018)** (CAPPRM:ASME + MOVOL:380V , CAPPRM:MHLW + COOL:AIR + MOVOL:200V)	
	Electrical legend:	Ambient sensor			
	0697 9809 20	1	LOCKNUT	**(20/07/2017 - 20/08/2018)** (CAPPRM:ASME + MOVOL:380V , CAPPRM:MHLW + MOVOL:200V) + COOL:AIR **(21/08/2018 - 11/12/2018)** (CAPPRM:ASME + MOVOL:380V , CAPPRM:MHLW + COOL:AIR + MOVOL:200V)	
	Electrical legend:	Ambient sensor			
	1089 9556 44	1	FAN WITH FILTER	**(20/07/2017 - 20/08/2018)** (CAPPRM:ASME + MOVOL:380V , CAPPRM:MHLW + MOVOL:200V) + COOL:AIR **(21/08/2018 - 11/12/2018)** (CAPPRM:ASME + MOVOL:380V , CAPPRM:MHLW + COOL:AIR + MOVOL:200V)	Cubicle fan
		4	AIR INLET W/O FILTER	**(20/07/2017 - 20/08/2018)** (CAPPRM:ASME + MOVOL:380V , CAPPRM:MHLW + MOVOL:200V) + COOL:AIR **(21/08/2018 - 11/12/2018)** (CAPPRM:ASME + MOVOL:380V , CAPPRM:MHLW + COOL:AIR + MOVOL:200V)	-
	Service kits:	2901 9901 02 - PREVENTIVE MAINTENANCE KIT - GA 90 VSD+, GA 110 VSD+ 2901 9900 96 - AIR FILTER KIT - GA 90 VSD+, GA 110 VSD+			
	1088 0032 09	1	CONNECTOR	**(20/07/2017 - 20/08/2018)** (CAPPRM:ASME + MOVOL:380V , CAPPRM:MHLW + MOVOL:200V) + COOL:AIR **(21/08/2018 - 11/12/2018)** (CAPPRM:ASME + MOVOL:380V , CAPPRM:MHLW + COOL:AIR + MOVOL:200V)	X3
	1089 9572 04	1	LINE FILTER	**(20/07/2017 - 20/08/2018)** (CAPPRM:ASME + MOVOL:380V , CAPPRM:MHLW + MOVOL:200V) + COOL:AIR **(21/08/2018 - 11/12/2018)** (CAPPRM:ASME + MOVOL:380V , CAPPRM:MHLW + COOL:AIR + MOVOL:200V)	Z1 for 110kw
	Electrical legend:	Z1 for 110kw			
	1089 9562 04	1	STRAP	**(20/07/2017 - 20/08/2018)** (CAPPRM:ASME + MOVOL:380V , CAPPRM:MHLW + MOVOL:200V) + COOL:AIR **(21/08/2018 - 11/12/2018)** (CAPPRM:ASME + MOVOL:380V , CAPPRM:MHLW + COOL:AIR + MOVOL:200V)	HF-screen
	1089 9514 56	1	TRANSFORMER	**(20/07/2017 - 20/08/2018)** (CAPPRM:ASME + MOVOL:380V , CAPPRM:MHLW + MOVOL:200V) + COOL:AIR **(21/08/2018 - 11/12/2018)** (CAPPRM:ASME + MOVOL:380V , CAPPRM:MHLW + COOL:AIR + MOVOL:200V)	T1
	1089 9522 26	1	CIRCUIT BREAKER	**(20/07/2017 - 20/08/2018)** (CAPPRM:ASME + MOVOL:380V , CAPPRM:MHLW + MOVOL:200V) + COOL:AIR **(21/08/2018 - 11/12/2018)** (CAPPRM:ASME + MOVOL:380V , CAPPRM:MHLW + COOL:AIR + MOVOL:200V)	F1
	1089 9513 41	1	PUSH BUTTON	**(20/07/2017 - 20/08/2018)** (CAPPRM:ASME + MOVOL:380V , CAPPRM:MHLW + MOVOL:200V) + COOL:AIR **(21/08/2018 - 11/12/2018)** (CAPPRM:ASME + MOVOL:380V , CAPPRM:MHLW + COOL:AIR + MOVOL:200V)	S3
	1089 9513 28	1	HOLDER	**(20/07/2017 - 20/08/2018)** (CAPPRM:ASME + MOVOL:380V , CAPPRM:MHLW + MOVOL:200V) + COOL:AIR **(21/08/2018 - 11/12/2018)** (CAPPRM:ASME + MOVOL:380V , CAPPRM:MHLW + COOL:AIR + MOVOL:200V)	S3

Legend:

CAPPRE:IEC - Component approval electrical:IEC
CAPPRM:ASME - Component approval mechanical:ASME
CAPPRM:MHLW - Component approval mechanical:MHLW
COOL:AIR - Cooling:Air cooled
FREQ:60HZ - Frequency:60 Hz
IDRY:Y - Integrated dryer:Yes
MODEL:GA110VP_16 - Model:GA 110VSD+
MOVOL:200V - Supply voltage:200 V
MOVOL:380V - Supply voltage:380 V

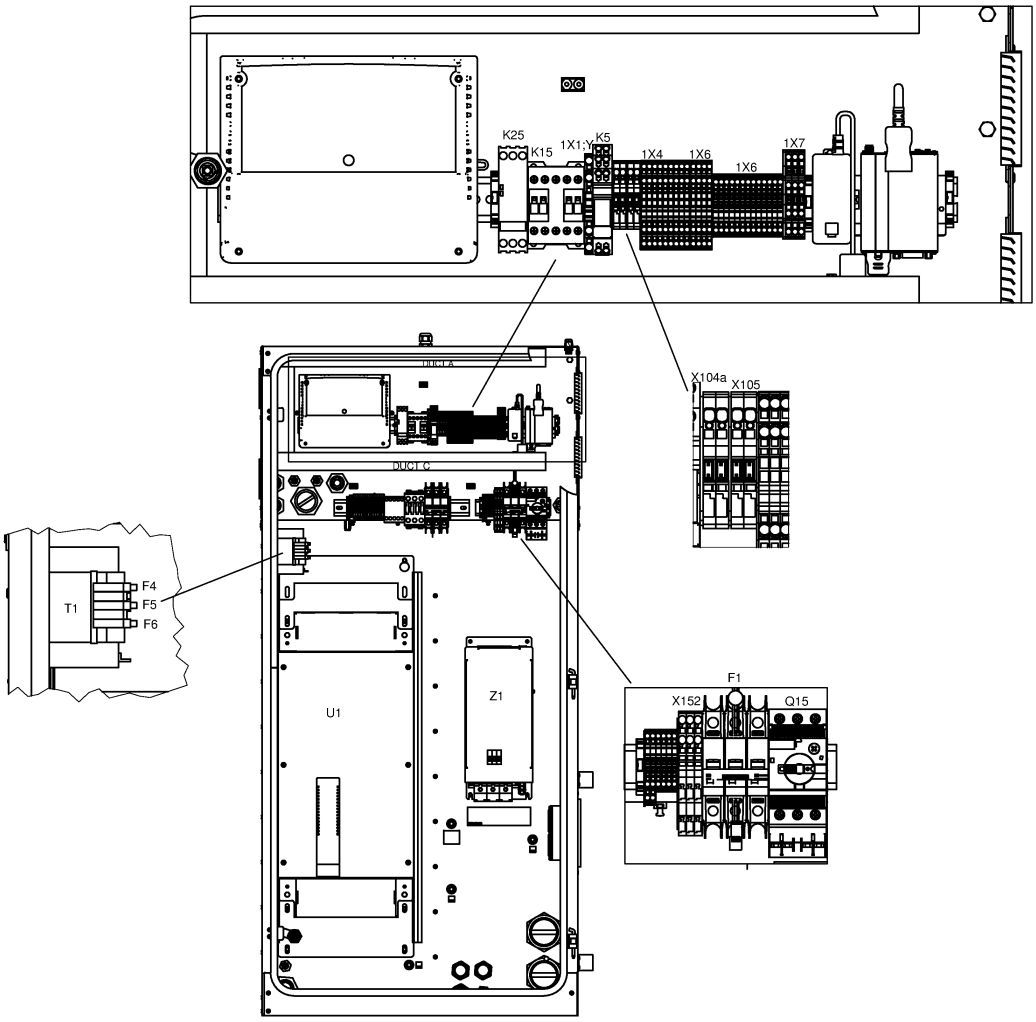
K25
K15
1X1:Y
K5
1X4
1X6
1X6
1X7
DUCT A
DUCT C
X104a
X105
T1
F4
F5
F6
U1
Z1
F1
X152
Q15

21.29 - Cubicle components GA 110 VSD+ - 200V-380V/60Hz - IEC - Full-Feature (20/07/2017 - 11/12/2018)

(MOVOL:200V , MOVOL:380V) + CAPPRE:IEC + FREQ:60HZ + IDRY:Y + MODEL:GA110VP_16

Ref	Part Number	Qty	Name	Validity	EL
	~~1089 9513 30~~	4	CONTACTOR	**(20/07/2017 - 20/08/2018)** (CAPPRM:ASME + MOVOL:380V , CAPPRM:MHLW + MOVOL:200V) + COOL:AIR **(21/08/2018 - 11/12/2018)** (CAPPRM:ASME + MOVOL:380V , CAPPRM:MHLW + COOL:AIR + MOVOL:200V)	S3
	Substituted by:	1089 9513 04 - CONTACT BLOCK (quantity: 1)			
	1088 0031 02	1	CONNECTOR 2-POLE	**(20/07/2017 - 20/08/2018)** (CAPPRM:ASME + MOVOL:380V , CAPPRM:MHLW + MOVOL:200V) + COOL:AIR **(21/08/2018 - 11/12/2018)** (CAPPRM:ASME + MOVOL:380V , CAPPRM:MHLW + COOL:AIR + MOVOL:200V)	
	Electrical legend:	X153 (Smartbox)			
	1088 0039 07	3	TERMINAL	**(20/07/2017 - 20/08/2018)** (CAPPRM:ASME + MOVOL:380V , CAPPRM:MHLW + MOVOL:200V) + COOL:AIR **(21/08/2018 - 11/12/2018)** (CAPPRM:ASME + MOVOL:380V , CAPPRM:MHLW + COOL:AIR + MOVOL:200V)	X152
	1088 0039 05	1	PLATE	**(20/07/2017 - 20/08/2018)** (CAPPRM:ASME + MOVOL:380V , CAPPRM:MHLW + MOVOL:200V) + COOL:AIR **(21/08/2018 - 11/12/2018)** (CAPPRM:ASME + MOVOL:380V , CAPPRM:MHLW + COOL:AIR + MOVOL:200V)	X152
	1088 0039 26	1	CONNECTOR	**(20/07/2017 - 20/08/2018)** (CAPPRM:ASME + MOVOL:380V , CAPPRM:MHLW + MOVOL:200V) + COOL:AIR **(21/08/2018 - 11/12/2018)** (CAPPRM:ASME + MOVOL:380V , CAPPRM:MHLW + COOL:AIR + MOVOL:200V)	
	Electrical legend:	X152 (remove coding pin 1,3)			
	1088 0037 99	4	PIN	**(20/07/2017 - 20/08/2018)** (CAPPRM:ASME + MOVOL:380V , CAPPRM:MHLW + MOVOL:200V) + COOL:AIR **(21/08/2018 - 11/12/2018)** (CAPPRM:ASME + MOVOL:380V , CAPPRM:MHLW + COOL:AIR + MOVOL:200V)	X152:1; 3
	~~1088 0031 81~~	7	END STOP BRACKET	**(20/07/2017 - 20/08/2018)** (CAPPRM:ASME + MOVOL:380V , CAPPRM:MHLW + MOVOL:200V) + COOL:AIR **(21/08/2018 - 11/12/2018)** (CAPPRM:ASME + MOVOL:380V , CAPPRM:MHLW + COOL:AIR + MOVOL:200V)	
	Electrical legend:	Connector/terminal rail			
	Substituted by:	1089 0577 82 - END RETAINER (quantity: 1)			
	1088 0039 38	2	TERMINAL	**(20/07/2017 - 20/08/2018)** (CAPPRM:ASME + MOVOL:380V , CAPPRM:MHLW + MOVOL:200V) + COOL:AIR **(21/08/2018 - 11/12/2018)** (CAPPRM:ASME + MOVOL:380V , CAPPRM:MHLW + COOL:AIR + MOVOL:200V)	1X11:2,5
	1088 0039 40	1	PLATE	**(20/07/2017 - 20/08/2018)** (CAPPRM:ASME + MOVOL:380V , CAPPRM:MHLW + MOVOL:200V) + COOL:AIR **(21/08/2018 - 11/12/2018)** (CAPPRM:ASME + MOVOL:380V , CAPPRM:MHLW + COOL:AIR + MOVOL:200V)	1X11
	1088 0039 34	4	TERMINAL	**(20/07/2017 - 20/08/2018)** (CAPPRM:ASME + MOVOL:380V , CAPPRM:MHLW + MOVOL:200V) + COOL:AIR **(21/08/2018 - 11/12/2018)** (CAPPRM:ASME + MOVOL:380V , CAPPRM:MHLW + COOL:AIR + MOVOL:200V)	
	Electrical legend:	1X11:30,301,34			
	1088 0039 35	1	PLATE	**(20/07/2017 - 20/08/2018)** (CAPPRM:ASME + MOVOL:380V , CAPPRM:MHLW + MOVOL:200V) + COOL:AIR **(21/08/2018 - 11/12/2018)** (CAPPRM:ASME + MOVOL:380V , CAPPRM:MHLW + COOL:AIR + MOVOL:200V)	1X11

Legend:

CAPPRE:IEC - Component approval electrical:IEC
COOL:AIR - Cooling:Air cooled
MODEL:GA110VP_16 - Model:GA 110VSD+
CAPPRM:ASME - Component approval mechanical:ASME
FREQ:60HZ - Frequency:60 Hz
MOVOL:200V - Supply voltage:200 V
CAPPRM:MHLW - Component approval mechanical:MHLW
IDRY:Y - Integrated dryer:Yes
MOVOL:380V - Supply voltage:380 V

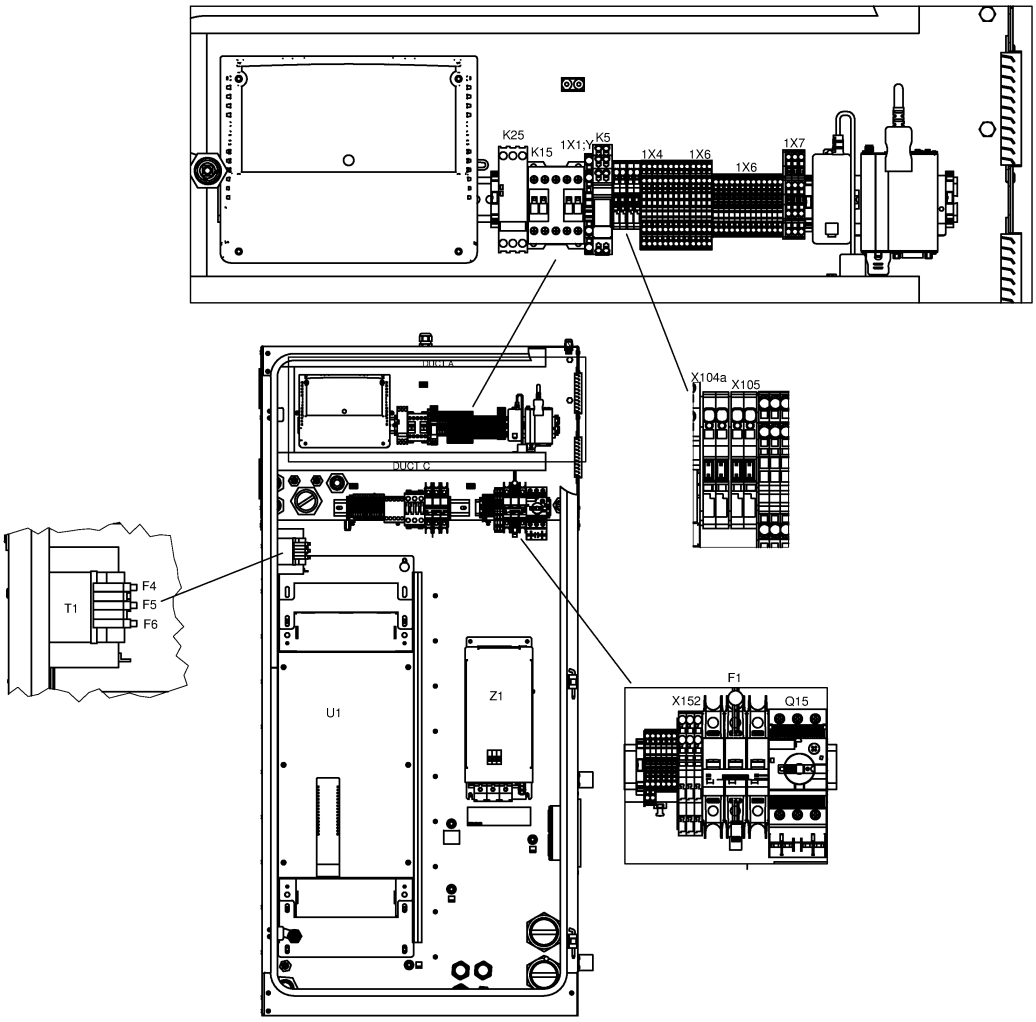
K25
K15
1X1:Y
K5
1X4
1X6
1X6
1X7
DUCT A
DUCT C
X104a
X105
T1
F4
F5
F6
U1
Z1
F1
X152
Q15

Ref	Part Number	Qty	Name	Validity	EL
	1088 0039 04	2	TERMINAL	**(20/07/2017 - 20/08/2018)** (CAPPRM:ASME + MOVOL:380V , CAPPRM:MHLW + MOVOL:200V) + COOL:AIR **(21/08/2018 - 11/12/2018)** (CAPPRM:ASME + MOVOL:380V , CAPPRM:MHLW + COOL:AIR + MOVOL:200V)	X104a
	1088 0037 99	2	PIN	**(20/07/2017 - 20/08/2018)** (CAPPRM:ASME + MOVOL:380V , CAPPRM:MHLW + MOVOL:200V) + COOL:AIR **(21/08/2018 - 11/12/2018)** (CAPPRM:ASME + MOVOL:380V , CAPPRM:MHLW + COOL:AIR + MOVOL:200V)	X104a/X105
	1088 0039 02	1	PLATE	**(20/07/2017 - 20/08/2018)** (CAPPRM:ASME + MOVOL:380V , CAPPRM:MHLW + MOVOL:200V) + COOL:AIR **(21/08/2018 - 11/12/2018)** (CAPPRM:ASME + MOVOL:380V , CAPPRM:MHLW + COOL:AIR + MOVOL:200V)	X104a
	1088 0039 04	2	TERMINAL	**(20/07/2017 - 20/08/2018)** (CAPPRM:ASME + MOVOL:380V , CAPPRM:MHLW + MOVOL:200V) + COOL:AIR **(21/08/2018 - 11/12/2018)** (CAPPRM:ASME + MOVOL:380V , CAPPRM:MHLW + COOL:AIR + MOVOL:200V)	
	1088 0039 02	1	PLATE	**(20/07/2017 - 20/08/2018)** (CAPPRM:ASME + MOVOL:380V , CAPPRM:MHLW + MOVOL:200V) + COOL:AIR **(21/08/2018 - 11/12/2018)** (CAPPRM:ASME + MOVOL:380V , CAPPRM:MHLW + COOL:AIR + MOVOL:200V)	
	1088 0039 34	13	TERMINAL	**(20/07/2017 - 20/08/2018)** (CAPPRM:ASME + MOVOL:380V , CAPPRM:MHLW + MOVOL:200V) + COOL:AIR **(21/08/2018 - 11/12/2018)** (CAPPRM:ASME + MOVOL:380V , CAPPRM:MHLW + COOL:AIR + MOVOL:200V)	1X6
	1088 0037 69	3	CONNECTOR	**(20/07/2017 - 20/08/2018)** (CAPPRM:ASME + MOVOL:380V , CAPPRM:MHLW + MOVOL:200V) + COOL:AIR **(21/08/2018 - 11/12/2018)** (CAPPRM:ASME + MOVOL:380V , CAPPRM:MHLW + COOL:AIR + MOVOL:200V)	1X7
	1088 0039 35	1	PLATE	**(20/07/2017 - 20/08/2018)** (CAPPRM:ASME + MOVOL:380V , CAPPRM:MHLW + MOVOL:200V) + COOL:AIR **(21/08/2018 - 11/12/2018)** (CAPPRM:ASME + MOVOL:380V , CAPPRM:MHLW + COOL:AIR + MOVOL:200V)	1X6
	1088 0040 37	1	END PLATE	**(20/07/2017 - 20/08/2018)** (CAPPRM:ASME + MOVOL:380V , CAPPRM:MHLW + MOVOL:200V) + COOL:AIR **(21/08/2018 - 11/12/2018)** (CAPPRM:ASME + MOVOL:380V , CAPPRM:MHLW + COOL:AIR + MOVOL:200V)	1X7
	1088 0039 36	9	TERMINAL	**(20/07/2017 - 20/08/2018)** (CAPPRM:ASME + MOVOL:380V , CAPPRM:MHLW + MOVOL:200V) + COOL:AIR **(21/08/2018 - 11/12/2018)** (CAPPRM:ASME + MOVOL:380V , CAPPRM:MHLW + COOL:AIR + MOVOL:200V)	1X4
	1088 0039 36	4	TERMINAL	**(20/07/2017 - 20/08/2018)** (CAPPRM:ASME + MOVOL:380V , CAPPRM:MHLW + MOVOL:200V) + COOL:AIR **(21/08/2018 - 11/12/2018)** (CAPPRM:ASME + MOVOL:380V , CAPPRM:MHLW + COOL:AIR + MOVOL:200V)	1X6
	1088 0039 37	1	END PLATE	**(20/07/2017 - 20/08/2018)** (CAPPRM:ASME + MOVOL:380V , CAPPRM:MHLW + MOVOL:200V) + COOL:AIR **(21/08/2018 - 11/12/2018)** (CAPPRM:ASME + MOVOL:380V , CAPPRM:MHLW + COOL:AIR + MOVOL:200V)	1X4

Legend:

CAPPRE:IEC - Component approval electrical:IEC
CAPPRM:ASME - Component approval mechanical:ASME
CAPPRM:MHLW - Component approval mechanical:MHLW
COOL:AIR - Cooling:Air cooled
FREQ:60HZ - Frequency:60 Hz
IDRY:Y - Integrated dryer:Yes
MODEL:GA110VP_16 - Model:GA 110VSD+
MOVOL:200V - Supply voltage:200 V
MOVOL:380V - Supply voltage:380 V

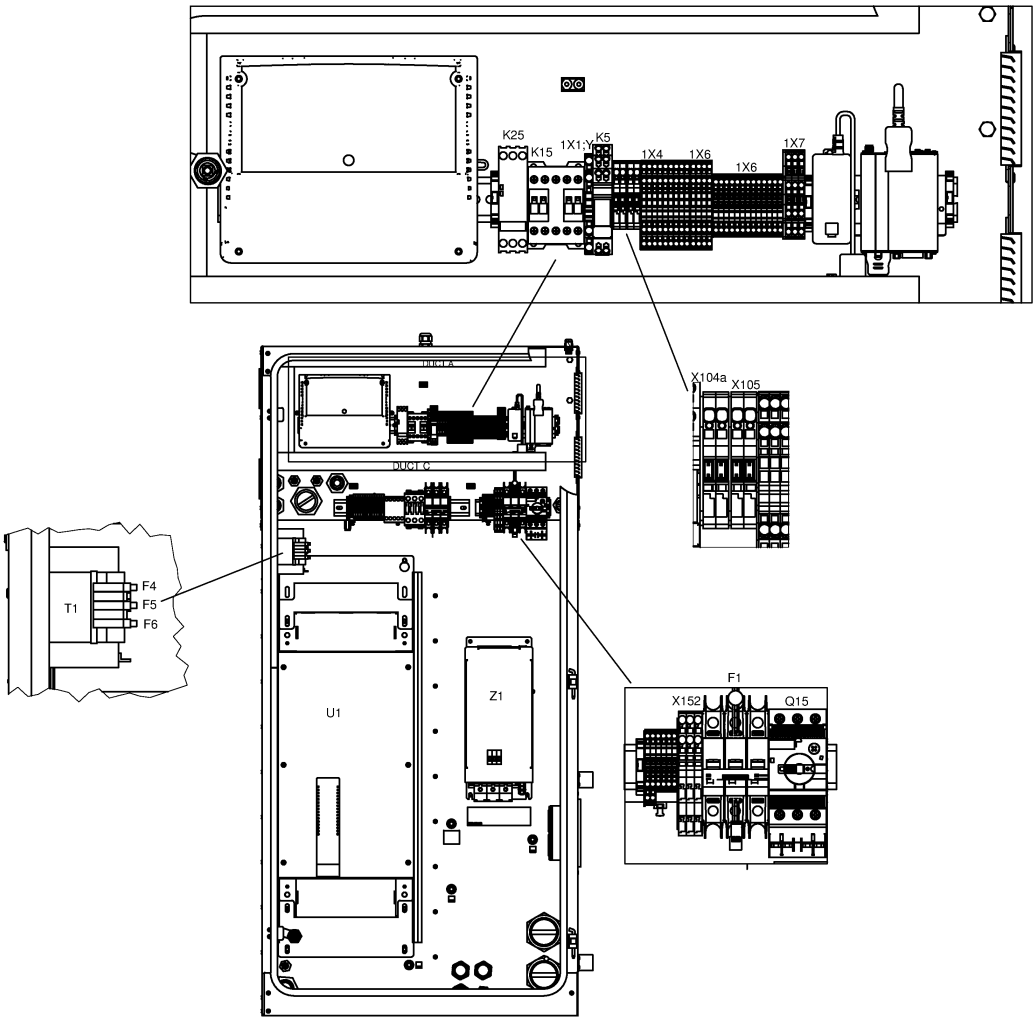
K25
K15
1X1:Y
K5
1X4
1X6
1X6
1X7
DUCT A
DUCT C
X104a
X105
T1
F4
F5
F6
U1
Z1
F1
X152
Q15

21.29 - Cubicle components GA 110 VSD+ - 200V-380V/60Hz - IEC - Full-Feature (20/07/2017 - 11/12/2018)

(MOVOL:200V , MOVOL:380V) + CAPPRE:IEC + FREQ:60HZ + IDRY:Y + MODEL:GA110VP_16

Ref	Part Number	Qty	Name	Validity	EL
	1088 0039 37	1	END PLATE	**(20/07/2017 - 20/08/2018)** (CAPPRM:ASME + MOVOL:380V , CAPPRM:MHLW + MOVOL:200V) + COOL:AIR **(21/08/2018 - 11/12/2018)** (CAPPRM:ASME + MOVOL:380V , CAPPRM:MHLW + COOL:AIR + MOVOL:200V)	1X6
	1088 0039 37	1	END PLATE	**(20/07/2017 - 20/08/2018)** (CAPPRM:ASME + MOVOL:380V , CAPPRM:MHLW + MOVOL:200V) + COOL:AIR **(21/08/2018 - 11/12/2018)** (CAPPRM:ASME + MOVOL:380V , CAPPRM:MHLW + COOL:AIR + MOVOL:200V)	1X1:Y/D
	1088 0037 81	1	CONNECTOR	**(20/07/2017 - 20/08/2018)** (CAPPRM:ASME + MOVOL:380V , CAPPRM:MHLW + MOVOL:200V) + COOL:AIR **(21/08/2018 - 11/12/2018)** (CAPPRM:ASME + MOVOL:380V , CAPPRM:MHLW + COOL:AIR + MOVOL:200V)	2X27
	1088 0037 80	1	CONNECTOR	**(20/07/2017 - 20/08/2018)** (CAPPRM:ASME + MOVOL:380V , CAPPRM:MHLW + MOVOL:200V) + COOL:AIR **(21/08/2018 - 11/12/2018)** (CAPPRM:ASME + MOVOL:380V , CAPPRM:MHLW + COOL:AIR + MOVOL:200V)	2X28
	1088 0031 32	1	CONNECTOR	**(20/07/2017 - 20/08/2018)** (CAPPRM:ASME + MOVOL:380V , CAPPRM:MHLW + MOVOL:200V) + COOL:AIR **(21/08/2018 - 11/12/2018)** (CAPPRM:ASME + MOVOL:380V , CAPPRM:MHLW + COOL:AIR + MOVOL:200V)	2X30
	1088 0031 26	1	CONNECTOR 6-POLE	**(20/07/2017 - 20/08/2018)** (CAPPRM:ASME + MOVOL:380V , CAPPRM:MHLW + MOVOL:200V) + COOL:AIR **(21/08/2018 - 11/12/2018)** (CAPPRM:ASME + MOVOL:380V , CAPPRM:MHLW + COOL:AIR + MOVOL:200V)	2X31
	~~1089 9664 06~~	1	SWITCH	**(20/07/2017 - 20/08/2018)** (CAPPRM:ASME + MOVOL:380V , CAPPRM:MHLW + MOVOL:200V) + COOL:AIR **(21/08/2018 - 11/12/2018)** (CAPPRM:ASME + MOVOL:380V , CAPPRM:MHLW + COOL:AIR + MOVOL:200V)	Q15
	Substituted by:	1089 9551 97 - AUX.CONTACT CIRCUIT BREAKER (quantity: 1)			
	1089 9551 19	1	CIRCUIT BREAKER	**(20/07/2017 - 20/08/2018)** (CAPPRM:ASME + MOVOL:380V , CAPPRM:MHLW + MOVOL:200V) + COOL:AIR **(21/08/2018 - 11/12/2018)** (CAPPRM:ASME + MOVOL:380V , CAPPRM:MHLW + COOL:AIR + MOVOL:200V)	Q15
	1088 0038 26	1	TERMINAL	**(20/07/2017 - 20/08/2018)** (CAPPRM:ASME + MOVOL:380V , CAPPRM:MHLW + MOVOL:200V) + COOL:AIR **(21/08/2018 - 11/12/2018)** (CAPPRM:ASME + MOVOL:380V , CAPPRM:MHLW + COOL:AIR + MOVOL:200V)	1X1:Y/D
	1089 9602 79	1	CONTACTOR 110 V	**(20/07/2017 - 20/08/2018)** (CAPPRM:ASME + MOVOL:380V , CAPPRM:MHLW + MOVOL:200V) + COOL:AIR **(21/08/2018 - 11/12/2018)** (CAPPRM:ASME + MOVOL:380V , CAPPRM:MHLW + COOL:AIR + MOVOL:200V)	K15
	1089 9461 26	1	PHASE SEQUENCE RELAY	**(20/07/2017 - 20/08/2018)** (CAPPRM:ASME + MOVOL:380V , CAPPRM:MHLW + MOVOL:200V) + COOL:AIR **(21/08/2018 - 11/12/2018)** (CAPPRM:ASME + MOVOL:380V , CAPPRM:MHLW + COOL:AIR + MOVOL:200V)	K25
	1088 0032 17	1	RELAY 115 VAC	**(20/07/2017 - 20/08/2018)** (CAPPRM:ASME + MOVOL:380V , CAPPRM:MHLW + MOVOL:200V) + COOL:AIR **(21/08/2018 - 11/12/2018)** (CAPPRM:ASME + MOVOL:380V , CAPPRM:MHLW + COOL:AIR + MOVOL:200V)	K5

Legend:

CAPPRE:IEC - Component approval electrical:IEC
CAPPRM:ASME - Component approval mechanical:ASME
CAPPRM:MHLW - Component approval mechanical:MHLW
COOL:AIR - Cooling:Air cooled
FREQ:60HZ - Frequency:60 Hz
IDRY:Y - Integrated dryer:Yes
MODEL:GA110VP_16 - Model:GA 110VSD+
MOVOL:200V - Supply voltage:200 V
MOVOL:380V - Supply voltage:380 V

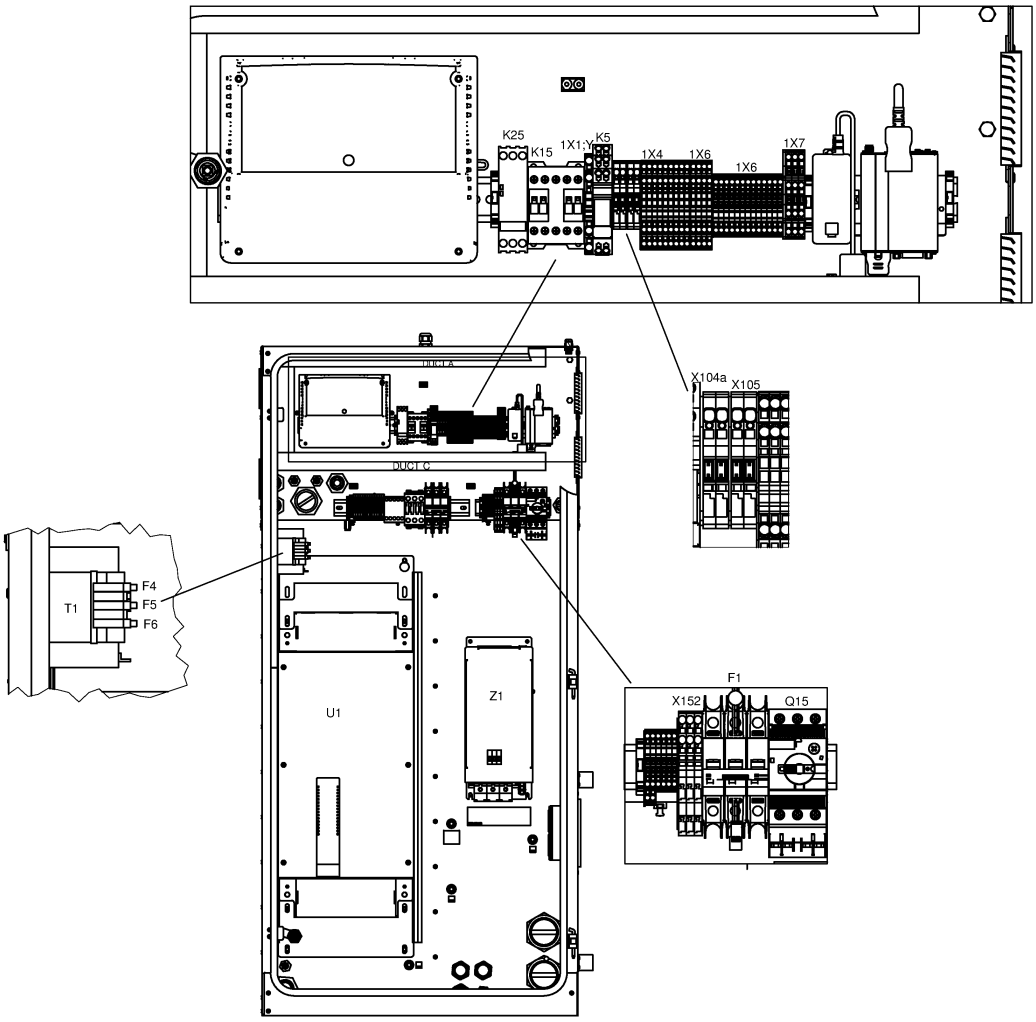
K25
K15
1X1:Y
K5
1X4
1X6
1X6
1X7
DUCT A
DUCT C
X104a
X105
T1
F4
F5
F6
U1
Z1
F1
X152
Q15

21.29 - Cubicle components GA 110 VSD+ - 200V-380V/60Hz - IEC - Full-Feature (20/07/2017 - 11/12/2018)

(MOVOL:200V , MOVOL:380V) + CAPPRE:IEC + FREQ:60HZ + IDRY:Y + MODEL:GA110VP_16

Ref	Part Number	Qty	Name	Validity	EL
	0991 8011 21	AR	CABLE TRAY	**(20/07/2017 - 20/08/2018)** (CAPPRM:ASME + MOVOL:380V , CAPPRM:MHLW + MOVOL:200V) + COOL:AIR **(21/08/2018 - 11/12/2018)** (CAPPRM:ASME + MOVOL:380V , CAPPRM:MHLW + COOL:AIR + MOVOL:200V)	L=1384mm
	1900 2203 01	1	DRYER RAIL	**(20/07/2017 - 20/08/2018)** (CAPPRM:ASME + MOVOL:380V , CAPPRM:MHLW + MOVOL:200V) + COOL:AIR **(21/08/2018 - 11/12/2018)** (CAPPRM:ASME + MOVOL:380V , CAPPRM:MHLW + COOL:AIR + MOVOL:200V)	-
	1088 0031 13	1	CONNECTOR 13-POLE	**(20/07/2017 - 20/08/2018)** (CAPPRM:ASME + MOVOL:380V , CAPPRM:MHLW + MOVOL:200V) + COOL:AIR **(21/08/2018 - 11/12/2018)** (CAPPRM:ASME + MOVOL:380V , CAPPRM:MHLW + COOL:AIR + MOVOL:200V)	1X30
	1088 0037 82	1	CONNECTOR	**(20/07/2017 - 20/08/2018)** (CAPPRM:ASME + MOVOL:380V , CAPPRM:MHLW + MOVOL:200V) + COOL:AIR **(21/08/2018 - 11/12/2018)** (CAPPRM:ASME + MOVOL:380V , CAPPRM:MHLW + COOL:AIR + MOVOL:200V)	3X34
	0697 9811 13	1	PLUG	**(20/07/2017 - 20/08/2018)** (CAPPRM:ASME + MOVOL:380V , CAPPRM:MHLW + MOVOL:200V) + COOL:AIR **(21/08/2018 - 11/12/2018)** (CAPPRM:ASME + MOVOL:380V , CAPPRM:MHLW + COOL:AIR + MOVOL:200V)	
	Electrical legend:	Energy recovery			
	0989 3700 44	1	LOCKNUT	**(20/07/2017 - 20/08/2018)** (CAPPRM:ASME + MOVOL:380V , CAPPRM:MHLW + MOVOL:200V) + COOL:AIR **(21/08/2018 - 11/12/2018)** (CAPPRM:ASME + MOVOL:380V , CAPPRM:MHLW + COOL:AIR + MOVOL:200V)	
	Electrical legend:	Energy recovery			
	0697 9811 12	1	PLUG	**(20/07/2017 - 20/08/2018)** (CAPPRM:ASME + MOVOL:380V , CAPPRM:MHLW + MOVOL:200V) + COOL:AIR **(21/08/2018 - 11/12/2018)** (CAPPRM:ASME + MOVOL:380V , CAPPRM:MHLW + COOL:AIR + MOVOL:200V)	
	Electrical legend:	Control circuit of T10			
	0989 3700 43	1	NUT	**(20/07/2017 - 20/08/2018)** (CAPPRM:ASME + MOVOL:380V , CAPPRM:MHLW + MOVOL:200V) + COOL:AIR **(21/08/2018 - 11/12/2018)** (CAPPRM:ASME + MOVOL:380V , CAPPRM:MHLW + COOL:AIR + MOVOL:200V)	
	Electrical legend:	Control circuit of T10			

Legend:

CAPPRE:IEC - Component approval electrical:IEC
CAPPRM:ASME - Component approval mechanical:ASME
CAPPRM:MHLW - Component approval mechanical:MHLW
COOL:AIR - Cooling:Air cooled
FREQ:60HZ - Frequency:60 Hz
IDRY:Y - Integrated dryer:Yes
MODEL:GA110VP_16 - Model:GA 110VSD+
MOVOL:200V - Supply voltage:200 V
MOVOL:380V - Supply voltage:380 V

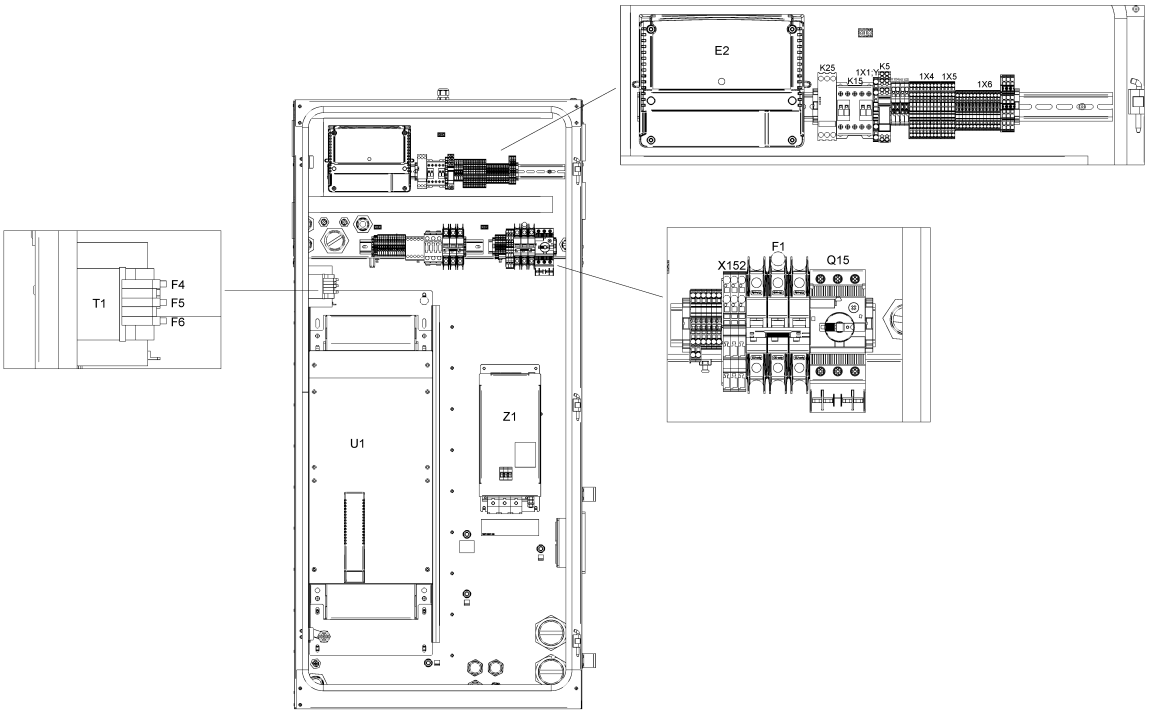
E2
K25
K15
1X1
K5
1X4
1X5
1X6
T1
F4
F5
F6
F1
X152
Q15
U1
Z1

21.30 - Cubicle components GA 110 VSD+ - 200V-380V/60Hz - IEC - Full-Feature (12/12/2018 - 04/02/2020)

(MOVOL:200V , MOVOL:380V) + CAPPRE:IEC + FREQ:60HZ + IDRY:Y + MODEL:GA110VP_16

Ref	Part Number	Qty	Name	Validity	EL
	1900 2202 34	1	CUBICLE	**(12/12/2018 - 04/02/2020)**	
	9820 3000 31	1	ASSEMBLY DRAWING	**(12/12/2018 - 24/02/2019)** (CAPPRM:ASME + MOVOL:380V , CAPPRM:MHLW + COOL:AIR + MOVOL:200V) **(25/02/2019 - 04/02/2020)** (CAPPRM:ASME + MOVOL:380V , CAPPRM:MHLW + MOVOL:200V) + COOL:AIR **(05/02/2020 - 30/12/2027)** CAPPRM:MHLW + COOL:AIR + MOVOL:200V	AD
	9820 3000 27	1	SERVICE DIAGRAM	**(12/12/2018 - 24/02/2019)** (CAPPRM:ASME + MOVOL:380V , CAPPRM:MHLW + COOL:AIR + MOVOL:200V) **(25/02/2019 - 04/02/2020)** (CAPPRM:ASME + MOVOL:380V , CAPPRM:MHLW + MOVOL:200V) + COOL:AIR **(05/02/2020 - 30/12/2027)** CAPPRM:MHLW + COOL:AIR + MOVOL:200V	SD
	1622 3798 72	1	WIRE HARNESS	**(12/12/2018 - 24/02/2019)** (CAPPRM:ASME + MOVOL:380V , CAPPRM:MHLW + COOL:AIR + MOVOL:200V) **(25/02/2019 - 04/02/2020)** (CAPPRM:ASME + MOVOL:380V , CAPPRM:MHLW + MOVOL:200V) + COOL:AIR **(05/02/2020 - 30/12/2027)** CAPPRM:MHLW + COOL:AIR + MOVOL:200V	Comm Cable
	1622 5099 04	1	DI CHANE CABLE (1400MM)	**(12/12/2018 - 24/02/2019)** (CAPPRM:ASME + MOVOL:380V , CAPPRM:MHLW + COOL:AIR + MOVOL:200V) **(25/02/2019 - 04/02/2020)** (CAPPRM:ASME + MOVOL:380V , CAPPRM:MHLW + MOVOL:200V) + COOL:AIR **(05/02/2020 - 30/12/2027)** CAPPRM:MHLW + COOL:AIR + MOVOL:200V	
	Electrical legend:	Comm Cable Loose supply			
	1649 8001 22	1	CUBICLE	**(12/12/2018 - 24/02/2019)** (CAPPRM:ASME + MOVOL:380V , CAPPRM:MHLW + COOL:AIR + MOVOL:200V) **(25/02/2019 - 04/02/2020)** (CAPPRM:ASME + MOVOL:380V , CAPPRM:MHLW + MOVOL:200V) + COOL:AIR **(05/02/2020 - 30/12/2027)** CAPPRM:MHLW + COOL:AIR + MOVOL:200V	MSA
	1649 8001 31	1	PLATE NEOS "E"	**(12/12/2018 - 24/02/2019)** (CAPPRM:ASME + MOVOL:380V , CAPPRM:MHLW + COOL:AIR + MOVOL:200V) **(25/02/2019 - 04/02/2020)** (CAPPRM:ASME + MOVOL:380V , CAPPRM:MHLW + MOVOL:200V) + COOL:AIR **(05/02/2020 - 30/12/2027)** CAPPRM:MHLW + COOL:AIR + MOVOL:200V	
	Electrical legend:	Mounting plate			
	1649 8003 85	1	MOUNTING PLATE	**(12/12/2018 - 24/02/2019)** (CAPPRM:ASME + MOVOL:380V , CAPPRM:MHLW + COOL:AIR + MOVOL:200V) **(25/02/2019 - 04/02/2020)** (CAPPRM:ASME + MOVOL:380V , CAPPRM:MHLW + MOVOL:200V) + COOL:AIR **(05/02/2020 - 30/12/2027)** CAPPRM:MHLW + COOL:AIR + MOVOL:200V	
	Electrical legend:	Mounting plate			
	1649 8002 39	1	WIRE HARNESS	**(12/12/2018 - 24/02/2019)** (CAPPRM:ASME + MOVOL:380V , CAPPRM:MHLW + COOL:AIR + MOVOL:200V) **(25/02/2019 - 04/02/2020)** (CAPPRM:ASME + MOVOL:380V , CAPPRM:MHLW + MOVOL:200V) + COOL:AIR **(05/02/2020 - 30/12/2027)** CAPPRM:MHLW + COOL:AIR + MOVOL:200V	WH

Legend:

CAPPRE:IEC - Component approval electrical:IEC
CAPPRM:ASME - Component approval mechanical:ASME
CAPPRM:MHLW - Component approval mechanical:MHLW
COOL:AIR - Cooling:Air cooled
FREQ:60HZ - Frequency:60 Hz
IDRY:Y - Integrated dryer:Yes
MODEL:GA110VP_16 - Model:GA 110VSD+
MOVOL:200V - Supply voltage:200 V
MOVOL:380V - Supply voltage:380 V

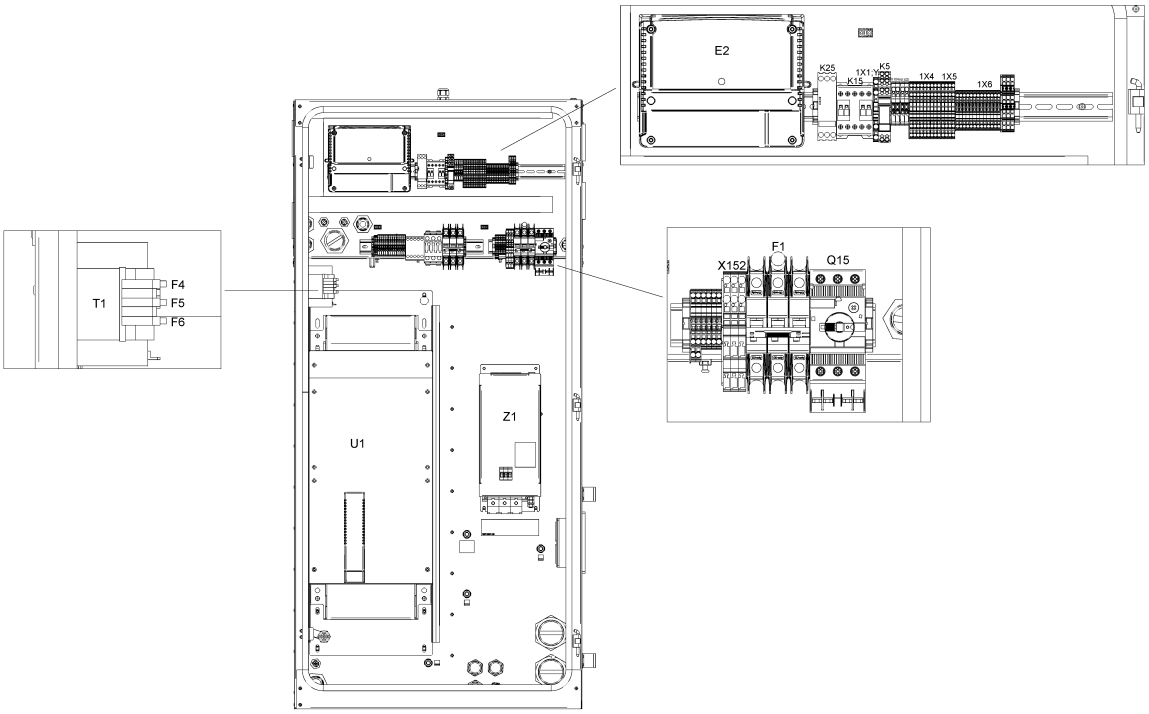
E2
K25
K15
1X1
K5
1X4
1X5
1X6
T1
F4
F5
F6
F1
X152
Q15
U1
Z1

Ref	Part Number	Qty	Name	Validity	EL
	1649 8002 40	1	WIRE HARNESS	**(12/12/2018 - 24/02/2019)** (CAPPRM:ASME + MOVOL:380V , CAPPRM:MHLW + COOL:AIR + MOVOL:200V) **(25/02/2019 - 04/02/2020)** (CAPPRM:ASME + MOVOL:380V , CAPPRM:MHLW + MOVOL:200V) + COOL:AIR **(05/02/2020 - 30/12/2027)** CAPPRM:MHLW + COOL:AIR + MOVOL:200V	WH
	1649 8002 72	1	CABLE POWER	**(12/12/2018 - 24/02/2019)** (CAPPRM:ASME + MOVOL:380V , CAPPRM:MHLW + COOL:AIR + MOVOL:200V) **(25/02/2019 - 04/02/2020)** (CAPPRM:ASME + MOVOL:380V , CAPPRM:MHLW + MOVOL:200V) + COOL:AIR **(05/02/2020 - 30/12/2027)** CAPPRM:MHLW + COOL:AIR + MOVOL:200V	
	Electrical legend:	Full feature (FF) Drain			
	1649 8002 73	1	WIRE HARNESS	**(12/12/2018 - 24/02/2019)** (CAPPRM:ASME + MOVOL:380V , CAPPRM:MHLW + COOL:AIR + MOVOL:200V) **(25/02/2019 - 04/02/2020)** (CAPPRM:ASME + MOVOL:380V , CAPPRM:MHLW + MOVOL:200V) + COOL:AIR **(05/02/2020 - 30/12/2027)** CAPPRM:MHLW + COOL:AIR + MOVOL:200V	
	Electrical legend:	Pack Drain + Air filter switch			
	1649 8002 75	1	WIRE HARNESS	**(12/12/2018 - 24/02/2019)** (CAPPRM:ASME + MOVOL:380V , CAPPRM:MHLW + COOL:AIR + MOVOL:200V) **(25/02/2019 - 04/02/2020)** (CAPPRM:ASME + MOVOL:380V , CAPPRM:MHLW + MOVOL:200V) + COOL:AIR **(05/02/2020 - 30/12/2027)** CAPPRM:MHLW + COOL:AIR + MOVOL:200V	
	Electrical legend:	Relative Humidity sensor			
	1649 8001 43	3	MOTOR CABLE	**(12/12/2018 - 24/02/2019)** (CAPPRM:ASME + MOVOL:380V , CAPPRM:MHLW + COOL:AIR + MOVOL:200V) **(25/02/2019 - 04/02/2020)** (CAPPRM:ASME + MOVOL:380V , CAPPRM:MHLW + MOVOL:200V) + COOL:AIR **(05/02/2020 - 30/12/2027)** CAPPRM:MHLW + COOL:AIR + MOVOL:200V	
	Electrical legend:	Motor conduit			
	1649 8001 46	1	MOTOR CABLE	**(12/12/2018 - 24/02/2019)** (CAPPRM:ASME + MOVOL:380V , CAPPRM:MHLW + COOL:AIR + MOVOL:200V) **(25/02/2019 - 04/02/2020)** (CAPPRM:ASME + MOVOL:380V , CAPPRM:MHLW + MOVOL:200V) + COOL:AIR **(05/02/2020 - 30/12/2027)** CAPPRM:MHLW + COOL:AIR + MOVOL:200V	
	Electrical legend:	Motor conduit			
		1	DATALABEL	**(12/12/2018 - 24/02/2019)** (CAPPRM:ASME + MOVOL:380V , CAPPRM:MHLW + COOL:AIR + MOVOL:200V) **(25/02/2019 - 04/02/2020)** (CAPPRM:ASME + MOVOL:380V , CAPPRM:MHLW + MOVOL:200V) + COOL:AIR **(05/02/2020 - 30/12/2027)** CAPPRM:MHLW + COOL:AIR + MOVOL:200V	Label
	1079 9901 68	1	WARNING LABEL	**(12/12/2018 - 24/02/2019)** (CAPPRM:ASME + MOVOL:380V , CAPPRM:MHLW + COOL:AIR + MOVOL:200V) **(25/02/2019 - 04/02/2020)** (CAPPRM:ASME + MOVOL:380V , CAPPRM:MHLW + MOVOL:200V) + COOL:AIR **(05/02/2020 - 30/12/2027)** CAPPRM:MHLW + COOL:AIR + MOVOL:200V	Label

Legend:

CAPPRE:IEC - Component approval electrical:IEC
CAPPRM:ASME - Component approval mechanical:ASME
CAPPRM:MHLW - Component approval mechanical:MHLW
COOL:AIR - Cooling:Air cooled
FREQ:60HZ - Frequency:60 Hz
IDRY:Y - Integrated dryer:Yes
MODEL:GA110VP_16 - Model:GA 110VSD+
MOVOL:200V - Supply voltage:200 V
MOVOL:380V - Supply voltage:380 V

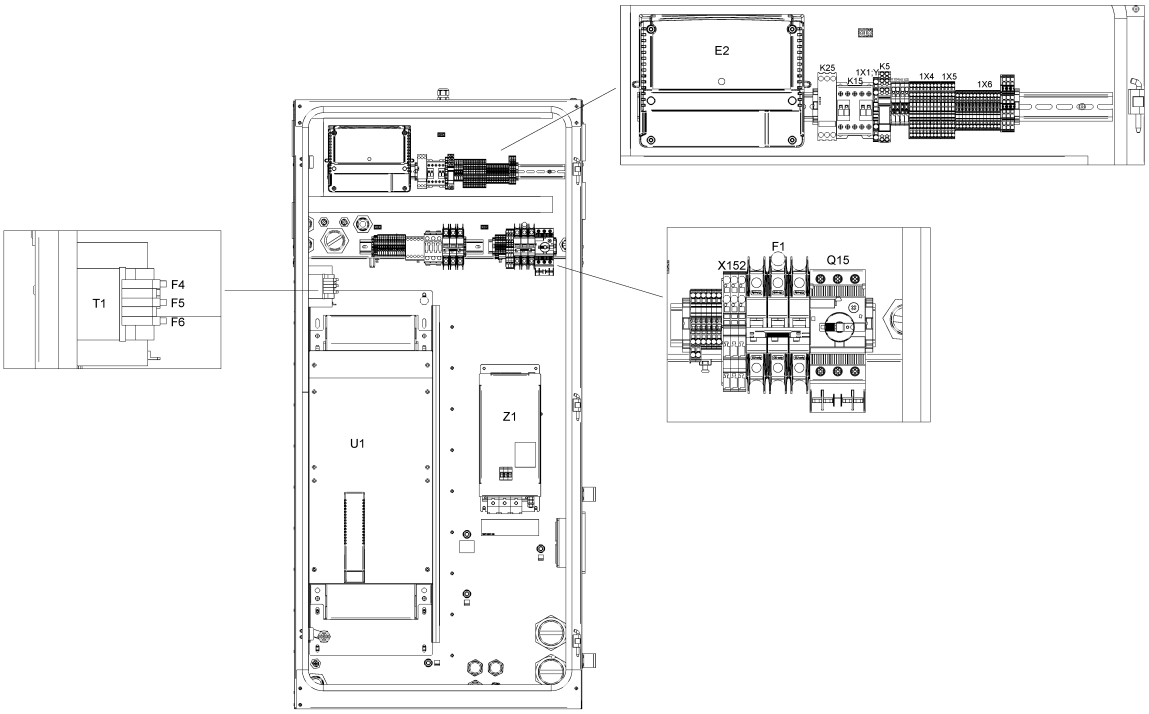
E2
K25
K15
1X1
K5
1X4
1X5
1X6
T1
F4
F5
F6
F1
X152
Q15
U1
Z1

Ref	Part Number	Qty	Name	Validity	EL
	1649 8005 00	-	LABEL	**(12/12/2018 - 24/02/2019)** (CAPPRM:ASME + MOVOL:380V , CAPPRM:MHLW + COOL:AIR + MOVOL:200V) **(25/02/2019 - 04/02/2020)** (CAPPRM:ASME + MOVOL:380V , CAPPRM:MHLW + MOVOL:200V) + COOL:AIR **(05/02/2020 - 30/12/2027)** CAPPRM:MHLW + COOL:AIR + MOVOL:200V	Label
	1900 5350 18	1	INVERTER	**(12/12/2018 - 24/02/2019)** (CAPPRM:ASME + MOVOL:380V , CAPPRM:MHLW + COOL:AIR + MOVOL:200V) **(25/02/2019 - 04/02/2020)** (CAPPRM:ASME + MOVOL:380V , CAPPRM:MHLW + MOVOL:200V) + COOL:AIR **(05/02/2020 - 30/12/2027)** CAPPRM:MHLW + COOL:AIR + MOVOL:200V	U1
	1631 2079 00	1	NANOPERMRING	**(12/12/2018 - 24/02/2019)** (CAPPRM:ASME + MOVOL:380V , CAPPRM:MHLW + COOL:AIR + MOVOL:200V) **(25/02/2019 - 04/02/2020)** (CAPPRM:ASME + MOVOL:380V , CAPPRM:MHLW + MOVOL:200V) + COOL:AIR **(05/02/2020 - 30/12/2027)** CAPPRM:MHLW + COOL:AIR + MOVOL:200V	
	Electrical legend:	Nanoperm ring			
	0697 9811 17	2	PLUG	**(12/12/2018 - 24/02/2019)** (CAPPRM:ASME + MOVOL:380V , CAPPRM:MHLW + COOL:AIR + MOVOL:200V) **(25/02/2019 - 04/02/2020)** (CAPPRM:ASME + MOVOL:380V , CAPPRM:MHLW + MOVOL:200V) + COOL:AIR **(05/02/2020 - 30/12/2027)** CAPPRM:MHLW + COOL:AIR + MOVOL:200V	
	Electrical legend:	Plug for transfo supply			
	0989 3700 48	2	NUT	**(12/12/2018 - 24/02/2019)** (CAPPRM:ASME + MOVOL:380V , CAPPRM:MHLW + COOL:AIR + MOVOL:200V) **(25/02/2019 - 04/02/2020)** (CAPPRM:ASME + MOVOL:380V , CAPPRM:MHLW + MOVOL:200V) + COOL:AIR **(05/02/2020 - 30/12/2027)** CAPPRM:MHLW + COOL:AIR + MOVOL:200V	
	Electrical legend:	Nut for transfo supply			
	0698 5140 72	1	CABLE GLAND	**(12/12/2018 - 24/02/2019)** (CAPPRM:ASME + MOVOL:380V , CAPPRM:MHLW + COOL:AIR + MOVOL:200V) **(25/02/2019 - 04/02/2020)** (CAPPRM:ASME + MOVOL:380V , CAPPRM:MHLW + MOVOL:200V) + COOL:AIR **(05/02/2020 - 30/12/2027)** CAPPRM:MHLW + COOL:AIR + MOVOL:200V	Fan
	0698 5140 71	1	CABLE GLAND	**(12/12/2018 - 24/02/2019)** (CAPPRM:ASME + MOVOL:380V , CAPPRM:MHLW + COOL:AIR + MOVOL:200V) **(25/02/2019 - 04/02/2020)** (CAPPRM:ASME + MOVOL:380V , CAPPRM:MHLW + MOVOL:200V) + COOL:AIR **(05/02/2020 - 30/12/2027)** CAPPRM:MHLW + COOL:AIR + MOVOL:200V	
	Electrical legend:	Ambient sensor			
	0697 9809 20	1	LOCKNUT	**(12/12/2018 - 24/02/2019)** (CAPPRM:ASME + MOVOL:380V , CAPPRM:MHLW + COOL:AIR + MOVOL:200V) **(25/02/2019 - 04/02/2020)** (CAPPRM:ASME + MOVOL:380V , CAPPRM:MHLW + MOVOL:200V) + COOL:AIR **(05/02/2020 - 30/12/2027)** CAPPRM:MHLW + COOL:AIR + MOVOL:200V	
	Electrical legend:	Ambient sensor			

Legend:

CAPPRE:IEC - Component approval electrical:IEC
CAPPRM:ASME - Component approval mechanical:ASME
CAPPRM:MHLW - Component approval mechanical:MHLW
COOL:AIR - Cooling:Air cooled
FREQ:60HZ - Frequency:60 Hz
IDRY:Y - Integrated dryer:Yes
MODEL:GA110VP_16 - Model:GA 110VSD+
MOVOL:200V - Supply voltage:200 V
MOVOL:380V - Supply voltage:380 V

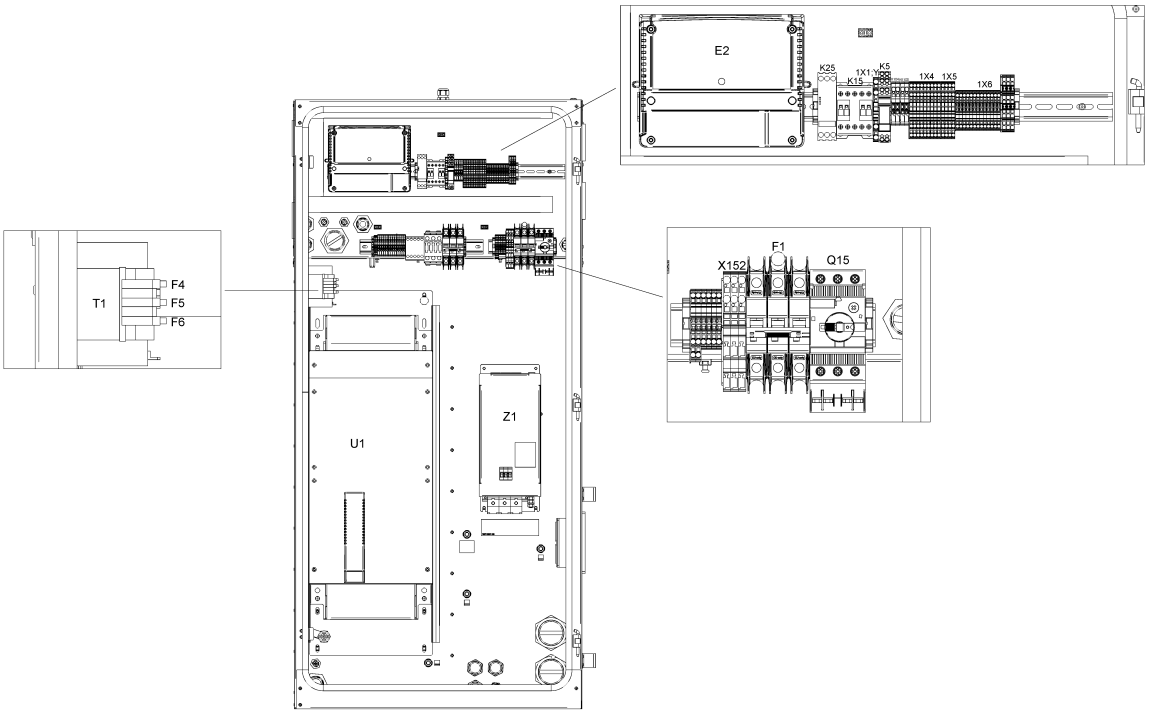
E2
K25
K15
1X1
K5
1X4
1X5
1X6
T1
F4
F5
F6
F1
X152
Q15
U1
Z1

Ref	Part Number	Qty	Name	Validity	EL
	1089 9556 44	1	FAN WITH FILTER	**(12/12/2018 - 24/02/2019)** (CAPPRM:ASME + MOVOL:380V , CAPPRM:MHLW + COOL:AIR + MOVOL:200V) **(25/02/2019 - 04/02/2020)** (CAPPRM:ASME + MOVOL:380V , CAPPRM:MHLW + MOVOL:200V) + COOL:AIR **(05/02/2020 - 30/12/2027)** CAPPRM:MHLW + COOL:AIR + MOVOL:200V	Cubicle fan
	1089 9556 72	4	AIR INLET WITHOUT FILTER	**(12/12/2018 - 24/02/2019)** (CAPPRM:ASME + MOVOL:380V , CAPPRM:MHLW + COOL:AIR + MOVOL:200V) **(25/02/2019 - 04/02/2020)** (CAPPRM:ASME + MOVOL:380V , CAPPRM:MHLW + MOVOL:200V) + COOL:AIR **(05/02/2020 - 30/12/2027)** CAPPRM:MHLW + COOL:AIR + MOVOL:200V	Filter grid
	1088 0032 09	1	CONNECTOR	**(12/12/2018 - 24/02/2019)** (CAPPRM:ASME + MOVOL:380V , CAPPRM:MHLW + COOL:AIR + MOVOL:200V) **(25/02/2019 - 04/02/2020)** (CAPPRM:ASME + MOVOL:380V , CAPPRM:MHLW + MOVOL:200V) + COOL:AIR **(05/02/2020 - 30/12/2027)** CAPPRM:MHLW + COOL:AIR + MOVOL:200V	X3
	1089 9572 04	1	LINE FILTER	**(12/12/2018 - 24/02/2019)** (CAPPRM:ASME + MOVOL:380V , CAPPRM:MHLW + COOL:AIR + MOVOL:200V) **(25/02/2019 - 04/02/2020)** (CAPPRM:ASME + MOVOL:380V , CAPPRM:MHLW + MOVOL:200V) + COOL:AIR **(05/02/2020 - 30/12/2027)** CAPPRM:MHLW + COOL:AIR + MOVOL:200V	Z1 for 110kw
	Electrical legend:	Z1 for 110kw			
	1089 9562 04	1	STRAP	**(12/12/2018 - 24/02/2019)** (CAPPRM:ASME + MOVOL:380V , CAPPRM:MHLW + COOL:AIR + MOVOL:200V) **(25/02/2019 - 04/02/2020)** (CAPPRM:ASME + MOVOL:380V , CAPPRM:MHLW + MOVOL:200V) + COOL:AIR **(05/02/2020 - 30/12/2027)** CAPPRM:MHLW + COOL:AIR + MOVOL:200V	HF-screen
	1089 9514 56	1	TRANSFORMER	**(12/12/2018 - 24/02/2019)** (CAPPRM:ASME + MOVOL:380V , CAPPRM:MHLW + COOL:AIR + MOVOL:200V) **(25/02/2019 - 04/02/2020)** (CAPPRM:ASME + MOVOL:380V , CAPPRM:MHLW + MOVOL:200V) + COOL:AIR **(05/02/2020 - 30/12/2027)** CAPPRM:MHLW + COOL:AIR + MOVOL:200V	T1
	1089 9522 26	1	CIRCUIT BREAKER	**(12/12/2018 - 24/02/2019)** (CAPPRM:ASME + MOVOL:380V , CAPPRM:MHLW + COOL:AIR + MOVOL:200V) **(25/02/2019 - 04/02/2020)** (CAPPRM:ASME + MOVOL:380V , CAPPRM:MHLW + MOVOL:200V) + COOL:AIR **(05/02/2020 - 30/12/2027)** CAPPRM:MHLW + COOL:AIR + MOVOL:200V	F1
	1089 9513 41	1	PUSH BUTTON	**(12/12/2018 - 24/02/2019)** (CAPPRM:ASME + MOVOL:380V , CAPPRM:MHLW + COOL:AIR + MOVOL:200V) **(25/02/2019 - 04/02/2020)** (CAPPRM:ASME + MOVOL:380V , CAPPRM:MHLW + MOVOL:200V) + COOL:AIR **(05/02/2020 - 30/12/2027)** CAPPRM:MHLW + COOL:AIR + MOVOL:200V	S3
	1089 9513 28	1	HOLDER	**(12/12/2018 - 24/02/2019)** (CAPPRM:ASME + MOVOL:380V , CAPPRM:MHLW + COOL:AIR + MOVOL:200V) **(25/02/2019 - 04/02/2020)** (CAPPRM:ASME + MOVOL:380V , CAPPRM:MHLW + MOVOL:200V) + COOL:AIR **(05/02/2020 - 30/12/2027)** CAPPRM:MHLW + COOL:AIR + MOVOL:200V	S3

Legend:

CAPPRE:IEC - Component approval electrical:IEC
CAPPRM:ASME - Component approval mechanical:ASME
CAPPRM:MHLW - Component approval mechanical:MHLW
COOL:AIR - Cooling:Air cooled
FREQ:60HZ - Frequency:60 Hz
IDRY:Y - Integrated dryer:Yes
MODEL:GA110VP_16 - Model:GA 110VSD+
MOVOL:200V - Supply voltage:200 V
MOVOL:380V - Supply voltage:380 V

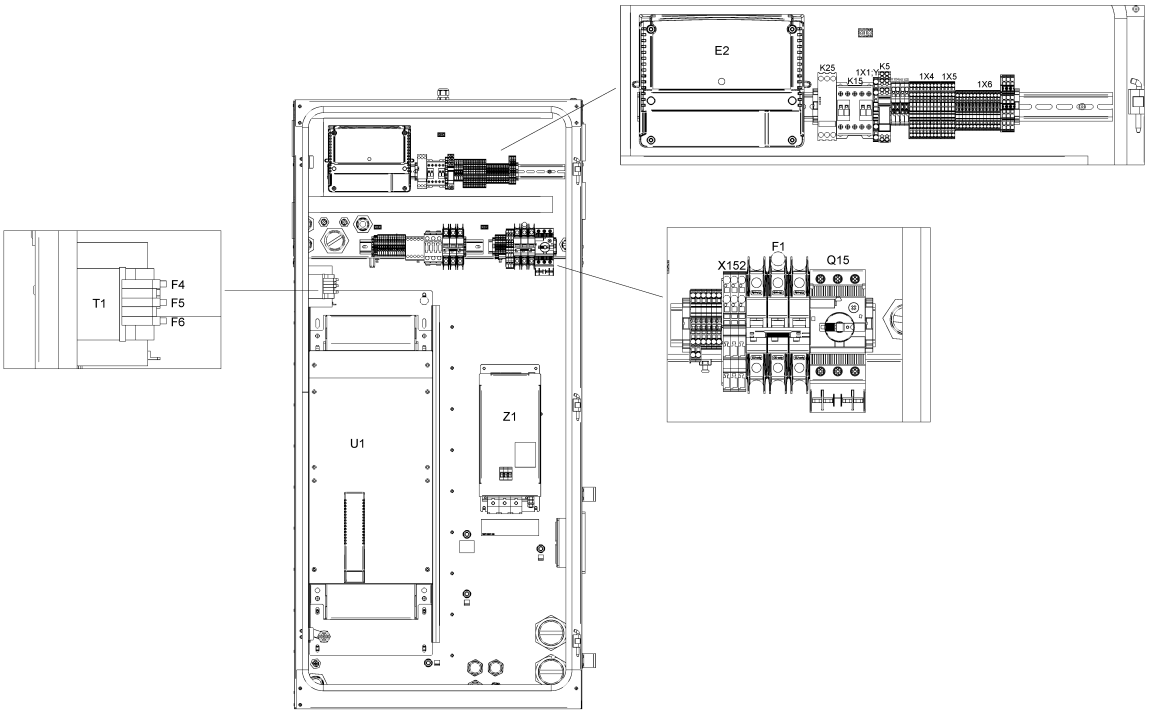
E2
K25
K15
1X1
K5
1X4
1X5
1X6
T1
F4
F5
F6
F1
X152
Q15
U1
Z1

Ref	Part Number	Qty	Name	Validity	EL
	~~1089 9513 30~~	4	CONTACTOR	**(12/12/2018 - 24/02/2019)** (CAPPRM:ASME + MOVOL:380V , CAPPRM:MHLW + COOL:AIR + MOVOL:200V) **(25/02/2019 - 04/02/2020)** (CAPPRM:ASME + MOVOL:380V , CAPPRM:MHLW + MOVOL:200V) + COOL:AIR **(05/02/2020 - 30/12/2027)** CAPPRM:MHLW + COOL:AIR + MOVOL:200V	S3
	Substituted by:	1089 9513 04 - CONTACT BLOCK (quantity: 1)			
	1088 0031 02	1	CONNECTOR 2-POLE	**(12/12/2018 - 17/02/2019)** (CAPPRM:ASME + MOVOL:380V , CAPPRM:MHLW + COOL:AIR + MOVOL:200V)	
	1088 0039 07	3	TERMINAL	**(12/12/2018 - 24/02/2019)** (CAPPRM:ASME + MOVOL:380V , CAPPRM:MHLW + COOL:AIR + MOVOL:200V) **(25/02/2019 - 04/02/2020)** (CAPPRM:ASME + MOVOL:380V , CAPPRM:MHLW + MOVOL:200V) + COOL:AIR **(05/02/2020 - 30/12/2027)** CAPPRM:MHLW + COOL:AIR + MOVOL:200V	X152
	1088 0039 05	1	PLATE	**(12/12/2018 - 24/02/2019)** (CAPPRM:ASME + MOVOL:380V , CAPPRM:MHLW + COOL:AIR + MOVOL:200V) **(25/02/2019 - 04/02/2020)** (CAPPRM:ASME + MOVOL:380V , CAPPRM:MHLW + MOVOL:200V) + COOL:AIR **(05/02/2020 - 30/12/2027)** CAPPRM:MHLW + COOL:AIR + MOVOL:200V	X152
	1088 0039 26	1	CONNECTOR	**(12/12/2018 - 24/02/2019)** (CAPPRM:ASME + MOVOL:380V , CAPPRM:MHLW + COOL:AIR + MOVOL:200V) **(25/02/2019 - 04/02/2020)** (CAPPRM:ASME + MOVOL:380V , CAPPRM:MHLW + MOVOL:200V) + COOL:AIR **(05/02/2020 - 30/12/2027)** CAPPRM:MHLW + COOL:AIR + MOVOL:200V	
	Electrical legend:	X152 (remove coding pin 1,3)			
	1088 0037 99	4	PIN	**(12/12/2018 - 24/02/2019)** (CAPPRM:ASME + MOVOL:380V , CAPPRM:MHLW + COOL:AIR + MOVOL:200V) **(25/02/2019 - 04/02/2020)** (CAPPRM:ASME + MOVOL:380V , CAPPRM:MHLW + MOVOL:200V) + COOL:AIR **(05/02/2020 - 30/12/2027)** CAPPRM:MHLW + COOL:AIR + MOVOL:200V	X152:1; 3
	~~1088 0031 81~~	7	END STOP BRACKET 6MM	**(12/12/2018 - 24/02/2019)** (CAPPRM:ASME + MOVOL:380V , CAPPRM:MHLW + COOL:AIR + MOVOL:200V) **(25/02/2019 - 04/02/2020)** (CAPPRM:ASME + MOVOL:380V , CAPPRM:MHLW + MOVOL:200V) + COOL:AIR **(05/02/2020 - 30/12/2027)** CAPPRM:MHLW + COOL:AIR + MOVOL:200V	
	Electrical legend:	Connector/terminal rail			
	Substituted by:	1089 0577 82 - END RETAINER (quantity: 1)			
	1088 0039 38	2	TERMINAL	**(12/12/2018 - 24/02/2019)** (CAPPRM:ASME + MOVOL:380V , CAPPRM:MHLW + COOL:AIR + MOVOL:200V) **(25/02/2019 - 04/02/2020)** (CAPPRM:ASME + MOVOL:380V , CAPPRM:MHLW + MOVOL:200V) + COOL:AIR **(05/02/2020 - 30/12/2027)** CAPPRM:MHLW + COOL:AIR + MOVOL:200V	1X11:2,5
	1088 0039 40	1	PLATE	**(12/12/2018 - 24/02/2019)** (CAPPRM:ASME + MOVOL:380V , CAPPRM:MHLW + COOL:AIR + MOVOL:200V) **(25/02/2019 - 04/02/2020)** (CAPPRM:ASME + MOVOL:380V , CAPPRM:MHLW + MOVOL:200V) + COOL:AIR **(05/02/2020 - 30/12/2027)** CAPPRM:MHLW + COOL:AIR + MOVOL:200V	1X11

Legend:

CAPPRE:IEC - Component approval electrical:IEC
CAPPRM:ASME - Component approval mechanical:ASME
CAPPRM:MHLW - Component approval mechanical:MHLW
COOL:AIR - Cooling:Air cooled
FREQ:60HZ - Frequency:60 Hz
IDRY:Y - Integrated dryer:Yes
MODEL:GA110VP_16 - Model:GA 110VSD+
MOVOL:200V - Supply voltage:200 V
MOVOL:380V - Supply voltage:380 V

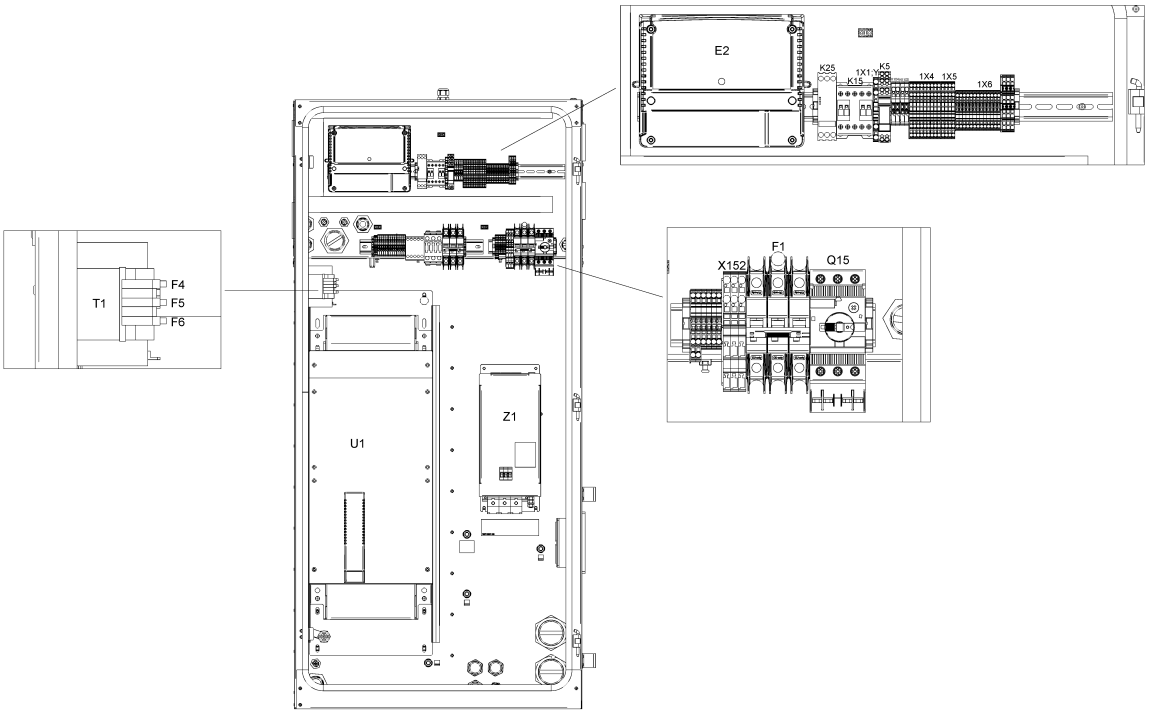
E2
K25
K15
1X1
K5
1X4
1X5
1X6
T1
F4
F5
F6
F1
X152
Q15
U1
Z1

Ref	Part Number	Qty	Name	Validity	EL
	1088 0039 34	4	TERMINAL	**(12/12/2018 - 24/02/2019)** (CAPPRM:ASME + MOVOL:380V , CAPPRM:MHLW + COOL:AIR + MOVOL:200V) **(25/02/2019 - 04/02/2020)** (CAPPRM:ASME + MOVOL:380V , CAPPRM:MHLW + MOVOL:200V) + COOL:AIR **(05/02/2020 - 30/12/2027)** CAPPRM:MHLW + COOL:AIR + MOVOL:200V	
	Electrical legend:	1X11:30,301,34			
	1088 0039 35	1	PLATE	**(12/12/2018 - 24/02/2019)** (CAPPRM:ASME + MOVOL:380V , CAPPRM:MHLW + COOL:AIR + MOVOL:200V) **(25/02/2019 - 04/02/2020)** (CAPPRM:ASME + MOVOL:380V , CAPPRM:MHLW + MOVOL:200V) + COOL:AIR **(05/02/2020 - 30/12/2027)** CAPPRM:MHLW + COOL:AIR + MOVOL:200V	1X11
	1088 0039 04	2	TERMINAL	**(12/12/2018 - 24/02/2019)** (CAPPRM:ASME + MOVOL:380V , CAPPRM:MHLW + COOL:AIR + MOVOL:200V) **(25/02/2019 - 04/02/2020)** (CAPPRM:ASME + MOVOL:380V , CAPPRM:MHLW + MOVOL:200V) + COOL:AIR **(05/02/2020 - 30/12/2027)** CAPPRM:MHLW + COOL:AIR + MOVOL:200V	X104a
	1088 0037 99	2	PIN	**(12/12/2018 - 24/02/2019)** (CAPPRM:ASME + MOVOL:380V , CAPPRM:MHLW + COOL:AIR + MOVOL:200V) **(25/02/2019 - 04/02/2020)** (CAPPRM:ASME + MOVOL:380V , CAPPRM:MHLW + MOVOL:200V) + COOL:AIR **(05/02/2020 - 30/12/2027)** CAPPRM:MHLW + COOL:AIR + MOVOL:200V	X104a/X105
	1088 0039 02	1	PLATE	**(12/12/2018 - 24/02/2019)** (CAPPRM:ASME + MOVOL:380V , CAPPRM:MHLW + COOL:AIR + MOVOL:200V) **(25/02/2019 - 04/02/2020)** (CAPPRM:ASME + MOVOL:380V , CAPPRM:MHLW + MOVOL:200V) + COOL:AIR **(05/02/2020 - 30/12/2027)** CAPPRM:MHLW + COOL:AIR + MOVOL:200V	X104a
	1088 0039 07	2	TERMINAL	**(12/12/2018 - 24/02/2019)** (CAPPRM:ASME + MOVOL:380V , CAPPRM:MHLW + COOL:AIR + MOVOL:200V) **(25/02/2019 - 04/02/2020)** (CAPPRM:ASME + MOVOL:380V , CAPPRM:MHLW + MOVOL:200V) + COOL:AIR **(05/02/2020 - 30/12/2027)** CAPPRM:MHLW + COOL:AIR + MOVOL:200V	X105
	1088 0039 05	1	PLATE	**(12/12/2018 - 24/02/2019)** (CAPPRM:ASME + MOVOL:380V , CAPPRM:MHLW + COOL:AIR + MOVOL:200V) **(25/02/2019 - 04/02/2020)** (CAPPRM:ASME + MOVOL:380V , CAPPRM:MHLW + MOVOL:200V) + COOL:AIR **(05/02/2020 - 30/12/2027)** CAPPRM:MHLW + COOL:AIR + MOVOL:200V	X105
	1088 0039 34	13	TERMINAL	**(12/12/2018 - 24/02/2019)** (CAPPRM:ASME + MOVOL:380V , CAPPRM:MHLW + COOL:AIR + MOVOL:200V) **(25/02/2019 - 04/02/2020)** (CAPPRM:ASME + MOVOL:380V , CAPPRM:MHLW + MOVOL:200V) + COOL:AIR **(05/02/2020 - 30/12/2027)** CAPPRM:MHLW + COOL:AIR + MOVOL:200V	1X6
	1088 0037 69	3	CONNECTOR	**(12/12/2018 - 24/02/2019)** (CAPPRM:ASME + MOVOL:380V , CAPPRM:MHLW + COOL:AIR + MOVOL:200V) **(25/02/2019 - 04/02/2020)** (CAPPRM:ASME + MOVOL:380V , CAPPRM:MHLW + MOVOL:200V) + COOL:AIR **(05/02/2020 - 30/12/2027)** CAPPRM:MHLW + COOL:AIR + MOVOL:200V	1X7

Legend:

CAPPRE:IEC - Component approval electrical:IEC
CAPPRM:ASME - Component approval mechanical:ASME
CAPPRM:MHLW - Component approval mechanical:MHLW
COOL:AIR - Cooling:Air cooled
FREQ:60HZ - Frequency:60 Hz
IDRY:Y - Integrated dryer:Yes
MODEL:GA110VP_16 - Model:GA 110VSD+
MOVOL:200V - Supply voltage:200 V
MOVOL:380V - Supply voltage:380 V

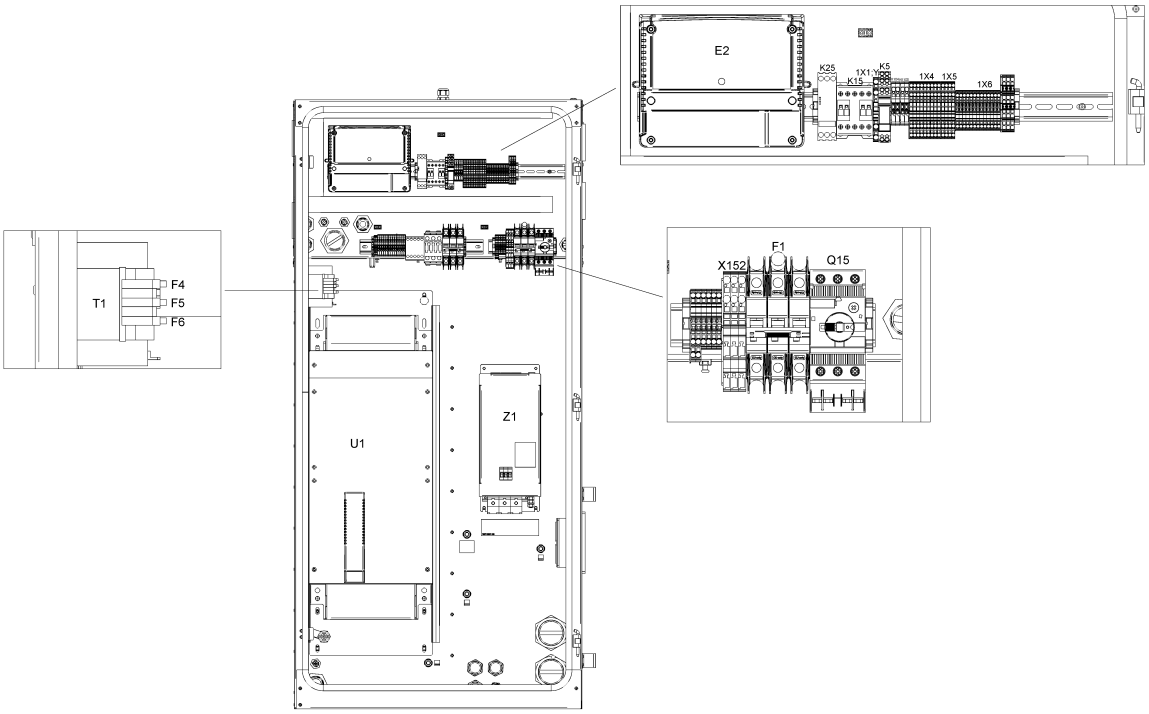
E2
K25
K15
1X1
K5
1X4
1X5
1X6
T1
F4
F5
F6
F1
X152
Q15
U1
Z1

Ref	Part Number	Qty	Name	Validity	EL
	1088 0039 35	1	PLATE	**(12/12/2018 - 24/02/2019)** (CAPPRM:ASME + MOVOL:380V , CAPPRM:MHLW + COOL:AIR + MOVOL:200V) **(25/02/2019 - 04/02/2020)** (CAPPRM:ASME + MOVOL:380V , CAPPRM:MHLW + MOVOL:200V) + COOL:AIR **(05/02/2020 - 30/12/2027)** CAPPRM:MHLW + COOL:AIR + MOVOL:200V	1X6
	1088 0040 37	1	END PLATE	**(12/12/2018 - 24/02/2019)** (CAPPRM:ASME + MOVOL:380V , CAPPRM:MHLW + COOL:AIR + MOVOL:200V) **(25/02/2019 - 04/02/2020)** (CAPPRM:ASME + MOVOL:380V , CAPPRM:MHLW + MOVOL:200V) + COOL:AIR **(05/02/2020 - 30/12/2027)** CAPPRM:MHLW + COOL:AIR + MOVOL:200V	1X7
	1088 0039 36	9	TERMINAL	**(12/12/2018 - 24/02/2019)** (CAPPRM:ASME + MOVOL:380V , CAPPRM:MHLW + COOL:AIR + MOVOL:200V) **(25/02/2019 - 04/02/2020)** (CAPPRM:ASME + MOVOL:380V , CAPPRM:MHLW + MOVOL:200V) + COOL:AIR **(05/02/2020 - 30/12/2027)** CAPPRM:MHLW + COOL:AIR + MOVOL:200V	1X4
	1088 0039 36	4	TERMINAL	**(12/12/2018 - 24/02/2019)** (CAPPRM:ASME + MOVOL:380V , CAPPRM:MHLW + COOL:AIR + MOVOL:200V) **(25/02/2019 - 04/02/2020)** (CAPPRM:ASME + MOVOL:380V , CAPPRM:MHLW + MOVOL:200V) + COOL:AIR **(05/02/2020 - 30/12/2027)** CAPPRM:MHLW + COOL:AIR + MOVOL:200V	1X6
	1088 0039 37	1	END PLATE	**(12/12/2018 - 24/02/2019)** (CAPPRM:ASME + MOVOL:380V , CAPPRM:MHLW + COOL:AIR + MOVOL:200V) **(25/02/2019 - 04/02/2020)** (CAPPRM:ASME + MOVOL:380V , CAPPRM:MHLW + MOVOL:200V) + COOL:AIR **(05/02/2020 - 30/12/2027)** CAPPRM:MHLW + COOL:AIR + MOVOL:200V	1X4
	1088 0039 37	1	END PLATE	**(12/12/2018 - 24/02/2019)** (CAPPRM:ASME + MOVOL:380V , CAPPRM:MHLW + COOL:AIR + MOVOL:200V) **(25/02/2019 - 04/02/2020)** (CAPPRM:ASME + MOVOL:380V , CAPPRM:MHLW + MOVOL:200V) + COOL:AIR **(05/02/2020 - 30/12/2027)** CAPPRM:MHLW + COOL:AIR + MOVOL:200V	1X6
	1088 0039 37	1	END PLATE	**(12/12/2018 - 24/02/2019)** (CAPPRM:ASME + MOVOL:380V , CAPPRM:MHLW + COOL:AIR + MOVOL:200V) **(25/02/2019 - 04/02/2020)** (CAPPRM:ASME + MOVOL:380V , CAPPRM:MHLW + MOVOL:200V) + COOL:AIR **(05/02/2020 - 30/12/2027)** CAPPRM:MHLW + COOL:AIR + MOVOL:200V	1X1:Y/D
	1088 0037 81	1	CONNECTOR	**(12/12/2018 - 24/02/2019)** (CAPPRM:ASME + MOVOL:380V , CAPPRM:MHLW + COOL:AIR + MOVOL:200V) **(25/02/2019 - 04/02/2020)** (CAPPRM:ASME + MOVOL:380V , CAPPRM:MHLW + MOVOL:200V) + COOL:AIR **(05/02/2020 - 30/12/2027)** CAPPRM:MHLW + COOL:AIR + MOVOL:200V	2X27
	1088 0037 80	1	CONNECTOR	**(12/12/2018 - 24/02/2019)** (CAPPRM:ASME + MOVOL:380V , CAPPRM:MHLW + COOL:AIR + MOVOL:200V) **(25/02/2019 - 04/02/2020)** (CAPPRM:ASME + MOVOL:380V , CAPPRM:MHLW + MOVOL:200V) + COOL:AIR **(05/02/2020 - 30/12/2027)** CAPPRM:MHLW + COOL:AIR + MOVOL:200V	2X28

Legend:

CAPPRE:IEC - Component approval electrical:IEC
CAPPRM:ASME - Component approval mechanical:ASME
CAPPRM:MHLW - Component approval mechanical:MHLW
COOL:AIR - Cooling:Air cooled
FREQ:60HZ - Frequency:60 Hz
IDRY:Y - Integrated dryer:Yes
MODEL:GA110VP_16 - Model:GA 110VSD+
MOVOL:200V - Supply voltage:200 V
MOVOL:380V - Supply voltage:380 V

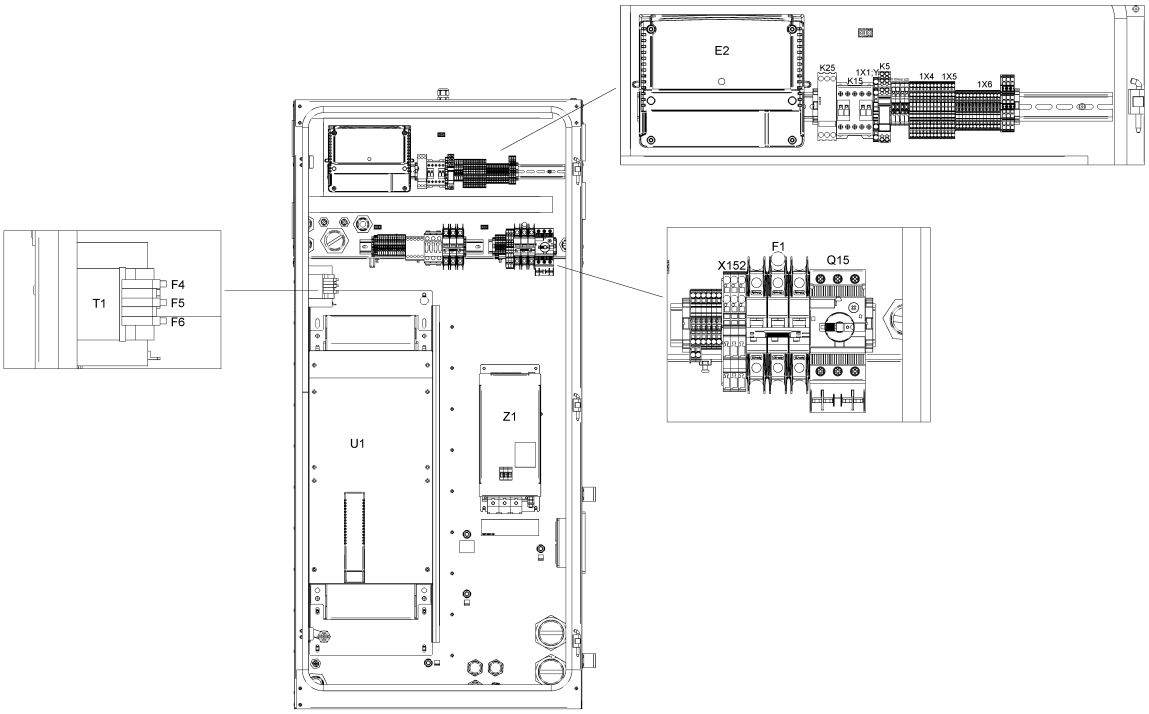
E2
K25
K15
1X1
K5
1X4
1X5
1X6
T1
F4
F5
F6
F1
X152
Q15
U1
Z1

Ref	Part Number	Qty	Name	Validity	EL
	1088 0031 32	1	CONNECTOR	**(12/12/2018 - 24/02/2019)** (CAPPRM:ASME + MOVOL:380V , CAPPRM:MHLW + COOL:AIR + MOVOL:200V) **(25/02/2019 - 04/02/2020)** (CAPPRM:ASME + MOVOL:380V , CAPPRM:MHLW + MOVOL:200V) + COOL:AIR **(05/02/2020 - 30/12/2027)** CAPPRM:MHLW + COOL:AIR + MOVOL:200V	2X30
	1088 0031 26	1	CONNECTOR 6-POLE	**(12/12/2018 - 24/02/2019)** (CAPPRM:ASME + MOVOL:380V , CAPPRM:MHLW + COOL:AIR + MOVOL:200V) **(25/02/2019 - 04/02/2020)** (CAPPRM:ASME + MOVOL:380V , CAPPRM:MHLW + MOVOL:200V) + COOL:AIR **(05/02/2020 - 30/12/2027)** CAPPRM:MHLW + COOL:AIR + MOVOL:200V	2X31
	~~1089 9664 06~~	1	SWITCH	**(12/12/2018 - 24/02/2019)** (CAPPRM:ASME + MOVOL:380V , CAPPRM:MHLW + COOL:AIR + MOVOL:200V) **(25/02/2019 - 04/02/2020)** (CAPPRM:ASME + MOVOL:380V , CAPPRM:MHLW + MOVOL:200V) + COOL:AIR **(05/02/2020 - 30/12/2027)** CAPPRM:MHLW + COOL:AIR + MOVOL:200V	Q15
	Substituted by:	1089 9551 97 - AUX.CONTACT CIRCUIT BREAKER (quantity: 1)			
	1089 9551 19	1	CIRCUIT BREAKER	**(12/12/2018 - 24/02/2019)** (CAPPRM:ASME + MOVOL:380V , CAPPRM:MHLW + COOL:AIR + MOVOL:200V) **(25/02/2019 - 04/02/2020)** (CAPPRM:ASME + MOVOL:380V , CAPPRM:MHLW + MOVOL:200V) + COOL:AIR **(05/02/2020 - 30/12/2027)** CAPPRM:MHLW + COOL:AIR + MOVOL:200V	Q15
	1088 0038 26	1	TERMINAL	**(12/12/2018 - 24/02/2019)** (CAPPRM:ASME + MOVOL:380V , CAPPRM:MHLW + COOL:AIR + MOVOL:200V) **(25/02/2019 - 04/02/2020)** (CAPPRM:ASME + MOVOL:380V , CAPPRM:MHLW + MOVOL:200V) + COOL:AIR **(05/02/2020 - 30/12/2027)** CAPPRM:MHLW + COOL:AIR + MOVOL:200V	1X1:Y/D
	1089 9602 79	1	CONTACTOR 110 V	**(12/12/2018 - 24/02/2019)** (CAPPRM:ASME + MOVOL:380V , CAPPRM:MHLW + COOL:AIR + MOVOL:200V) **(25/02/2019 - 04/02/2020)** (CAPPRM:ASME + MOVOL:380V , CAPPRM:MHLW + MOVOL:200V) + COOL:AIR **(05/02/2020 - 30/12/2027)** CAPPRM:MHLW + COOL:AIR + MOVOL:200V	K15
	1089 9461 26	1	PHASE SEQUENCE RELAY	**(12/12/2018 - 24/02/2019)** (CAPPRM:ASME + MOVOL:380V , CAPPRM:MHLW + COOL:AIR + MOVOL:200V) **(25/02/2019 - 04/02/2020)** (CAPPRM:ASME + MOVOL:380V , CAPPRM:MHLW + MOVOL:200V) + COOL:AIR **(05/02/2020 - 30/12/2027)** CAPPRM:MHLW + COOL:AIR + MOVOL:200V	K25
	1088 0032 17	1	RELAY 115 VAC	**(12/12/2018 - 24/02/2019)** (CAPPRM:ASME + MOVOL:380V , CAPPRM:MHLW + COOL:AIR + MOVOL:200V) **(25/02/2019 - 04/02/2020)** (CAPPRM:ASME + MOVOL:380V , CAPPRM:MHLW + MOVOL:200V) + COOL:AIR **(05/02/2020 - 30/12/2027)** CAPPRM:MHLW + COOL:AIR + MOVOL:200V	K5
	0991 8011 21	AR	CABLE TRAY	**(12/12/2018 - 24/02/2019)** (CAPPRM:ASME + MOVOL:380V , CAPPRM:MHLW + COOL:AIR + MOVOL:200V) **(25/02/2019 - 04/02/2020)** (CAPPRM:ASME + MOVOL:380V , CAPPRM:MHLW + MOVOL:200V) + COOL:AIR **(05/02/2020 - 30/12/2027)** CAPPRM:MHLW + COOL:AIR + MOVOL:200V	L=1384mm

Legend:

CAPPRE:IEC - Component approval electrical:IEC
CAPPRM:ASME - Component approval mechanical:ASME
CAPPRM:MHLW - Component approval mechanical:MHLW
COOL:AIR - Cooling:Air cooled
FREQ:60HZ - Frequency:60 Hz
IDRY:Y - Integrated dryer:Yes
MODEL:GA110VP_16 - Model:GA 110VSD+
MOVOL:200V - Supply voltage:200 V
MOVOL:380V - Supply voltage:380 V

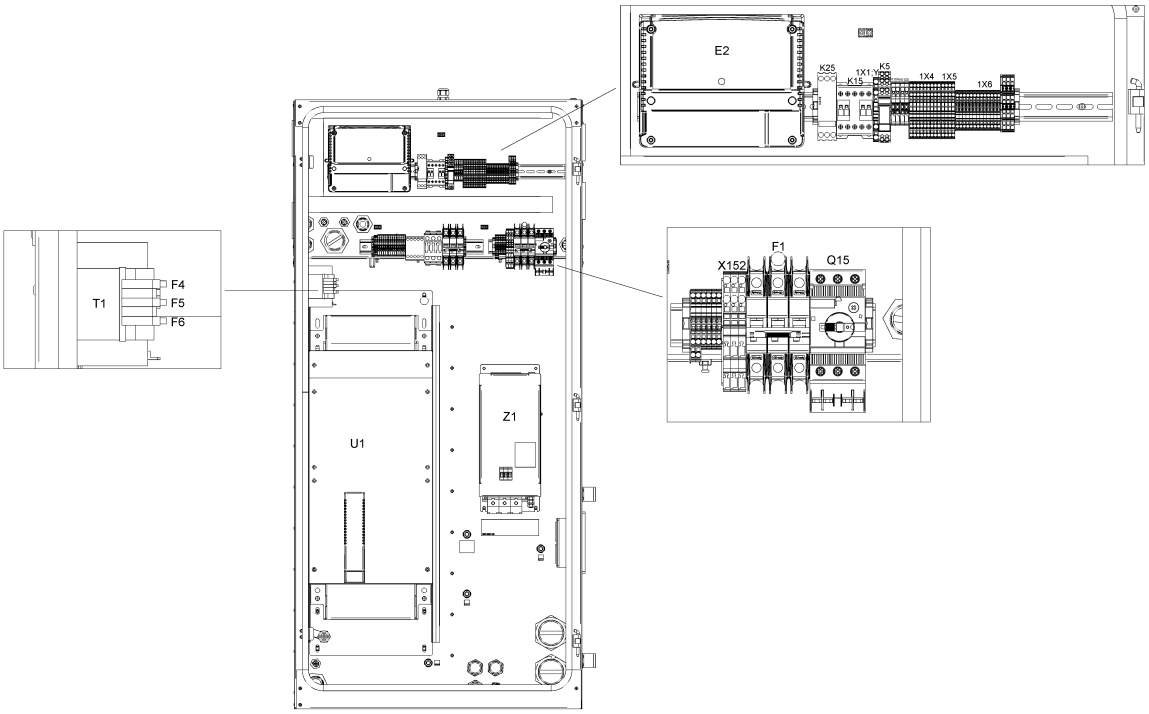
E2
K25
K15
1X1
K5
1X4
1X5
1X6
T1
F4
F5
F6
F1
X152
Q15
U1
Z1

Ref	Part Number	Qty	Name	Validity	EL
	1900 2203 01	1	DRYER RAIL	**(12/12/2018 - 24/02/2019)** (CAPPRM:ASME + MOVOL:380V , CAPPRM:MHLW + COOL:AIR + MOVOL:200V) **(25/02/2019 - 04/02/2020)** (CAPPRM:ASME + MOVOL:380V , CAPPRM:MHLW + MOVOL:200V) + COOL:AIR **(05/02/2020 - 30/12/2027)** CAPPRM:MHLW + COOL:AIR + MOVOL:200V	
	Electrical legend:	With trafo on dryer			
	1088 0031 13	1	CONNECTOR 13-POLE	**(12/12/2018 - 24/02/2019)** (CAPPRM:ASME + MOVOL:380V , CAPPRM:MHLW + COOL:AIR + MOVOL:200V) **(25/02/2019 - 04/02/2020)** (CAPPRM:ASME + MOVOL:380V , CAPPRM:MHLW + MOVOL:200V) + COOL:AIR **(05/02/2020 - 30/12/2027)** CAPPRM:MHLW + COOL:AIR + MOVOL:200V	1X30
	1088 0037 82	1	CONNECTOR	**(12/12/2018 - 24/02/2019)** (CAPPRM:ASME + MOVOL:380V , CAPPRM:MHLW + COOL:AIR + MOVOL:200V) **(25/02/2019 - 04/02/2020)** (CAPPRM:ASME + MOVOL:380V , CAPPRM:MHLW + MOVOL:200V) + COOL:AIR **(05/02/2020 - 30/12/2027)** CAPPRM:MHLW + COOL:AIR + MOVOL:200V	3X34
	0697 9811 13	1	PLUG	**(12/12/2018 - 24/02/2019)** (CAPPRM:ASME + MOVOL:380V , CAPPRM:MHLW + COOL:AIR + MOVOL:200V) **(25/02/2019 - 04/02/2020)** (CAPPRM:ASME + MOVOL:380V , CAPPRM:MHLW + MOVOL:200V) + COOL:AIR **(05/02/2020 - 30/12/2027)** CAPPRM:MHLW + COOL:AIR + MOVOL:200V	
	Electrical legend:	Energy recovery			
	0989 3700 44	1	LOCKNUT	**(12/12/2018 - 24/02/2019)** (CAPPRM:ASME + MOVOL:380V , CAPPRM:MHLW + COOL:AIR + MOVOL:200V) **(25/02/2019 - 04/02/2020)** (CAPPRM:ASME + MOVOL:380V , CAPPRM:MHLW + MOVOL:200V) + COOL:AIR **(05/02/2020 - 30/12/2027)** CAPPRM:MHLW + COOL:AIR + MOVOL:200V	
	Electrical legend:	Energy recovery			
	0697 9811 12	1	PLUG	**(12/12/2018 - 24/02/2019)** (CAPPRM:ASME + MOVOL:380V , CAPPRM:MHLW + COOL:AIR + MOVOL:200V) **(25/02/2019 - 04/02/2020)** (CAPPRM:ASME + MOVOL:380V , CAPPRM:MHLW + MOVOL:200V) + COOL:AIR **(05/02/2020 - 30/12/2027)** CAPPRM:MHLW + COOL:AIR + MOVOL:200V	
	Electrical legend:	Control circuit of T10			
	0989 3700 43	1	NUT	**(12/12/2018 - 24/02/2019)** (CAPPRM:ASME + MOVOL:380V , CAPPRM:MHLW + COOL:AIR + MOVOL:200V) **(25/02/2019 - 04/02/2020)** (CAPPRM:ASME + MOVOL:380V , CAPPRM:MHLW + MOVOL:200V) + COOL:AIR **(05/02/2020 - 30/12/2027)** CAPPRM:MHLW + COOL:AIR + MOVOL:200V	
	Electrical legend:	Control circuit of T10			
	0697 9811 10	1	PLUG	**(12/12/2018 - 24/02/2019)** (CAPPRM:ASME + MOVOL:380V , CAPPRM:MHLW + COOL:AIR + MOVOL:200V) **(25/02/2019 - 04/02/2020)** (CAPPRM:ASME + MOVOL:380V , CAPPRM:MHLW + MOVOL:200V) + COOL:AIR **(05/02/2020 - 30/12/2027)** CAPPRM:MHLW + COOL:AIR + MOVOL:200V	
	Electrical legend:	Plug for smartbox hole			

Legend:

CAPPRE:IEC - Component approval electrical:IEC
CAPPRM:ASME - Component approval mechanical:ASME
CAPPRM:MHLW - Component approval mechanical:MHLW
COOL:AIR - Cooling:Air cooled
FREQ:60HZ - Frequency:60 Hz
IDRY:Y - Integrated dryer:Yes
MODEL:GA110VP_16 - Model:GA 110VSD+
MOVOL:200V - Supply voltage:200 V
MOVOL:380V - Supply voltage:380 V

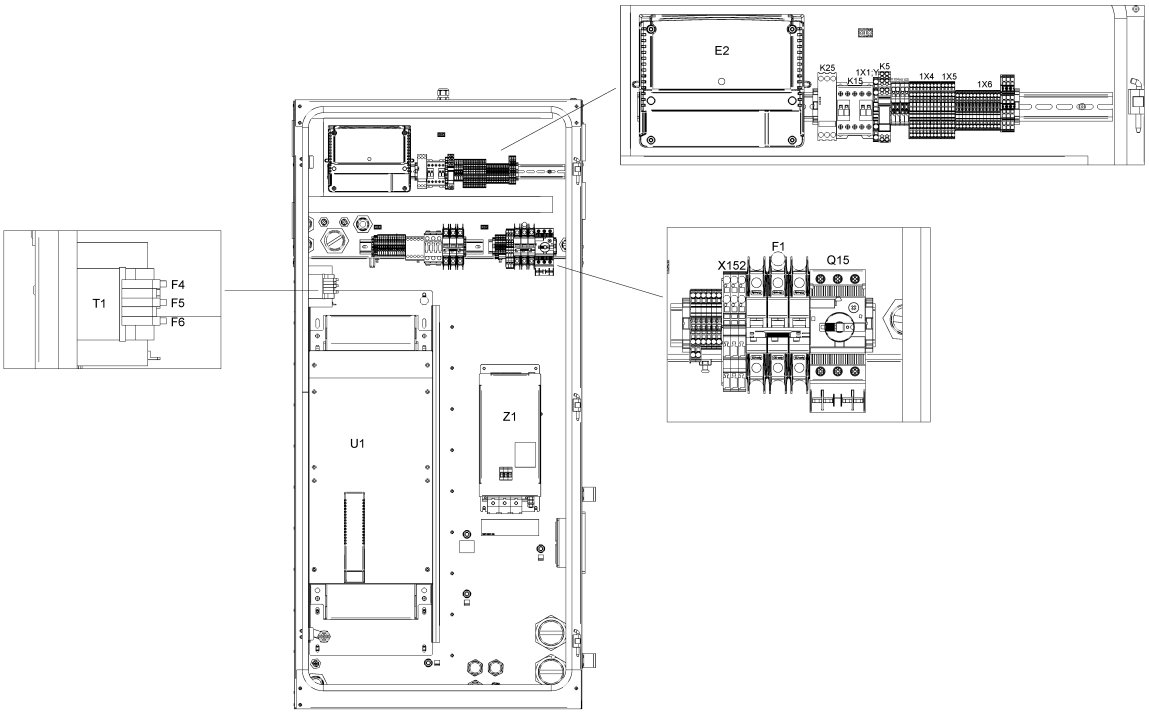
E2
K25
K15
1X1
K5
1X4
1X5
1X6
T1
F4
F5
F6
F1
X152
Q15
U1
Z1

Ref	Part Number	Qty	Name	Validity	EL
	0989 3700 41	1	LOCKNUT	**(12/12/2018 - 24/02/2019)** (CAPPRM:ASME + MOVOL:380V , CAPPRM:MHLW + COOL:AIR + MOVOL:200V) **(25/02/2019 - 04/02/2020)** (CAPPRM:ASME + MOVOL:380V , CAPPRM:MHLW + MOVOL:200V) + COOL:AIR **(05/02/2020 - 30/12/2027)** CAPPRM:MHLW + COOL:AIR + MOVOL:200V	
	Electrical legend:	Nut for smartbox hole			

Legend:

CAPPRE:IEC - Component approval electrical:IEC	CAPPRM:ASME - Component approval mechanical:ASME	CAPPRM:MHLW - Component approval mechanical:MHLW
COOL:AIR - Cooling:Air cooled	FREQ:60HZ - Frequency:60 Hz	IDRY:Y - Integrated dryer:Yes
MODEL:GA110VP_16 - Model:GA 110VSD+	MOVOL:200V - Supply voltage:200 V	MOVOL:380V - Supply voltage:380 V

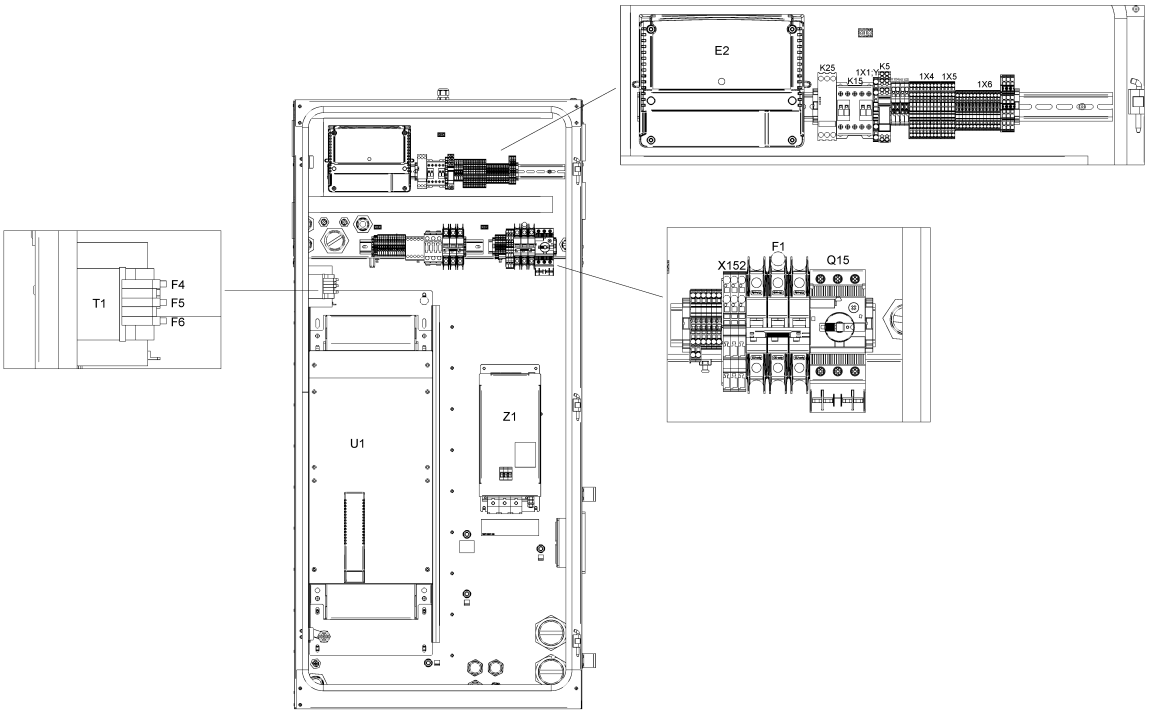
E2
K25
K15
1X1
K5
1X4
1X5
1X6
T1
F4
F5
F6
F1
X152
Q15
U1
Z1

21.31 - Cubicle components GA 110 VSD+ - 200V-380V/60Hz - IEC - Full-Feature (05/02/2020 - ...)

(MOVOL:200V , MOVOL:380V) + CAPPRE:IEC + FREQ:60HZ + IDRY:Y + MODEL:GA110VP_16

Ref	Part Number	Qty	Name	Validity	EL
	1900 2202 54	1	CUBICLE	**(05/02/2020 - ...)**	
	9820 3000 31	1	ASSEMBLY DRAWING	**(25/02/2019 - 04/02/2020)** CAPPRM:ASME + COOL:WATER + MOVOL:380V **(05/02/2020 - ...)** CAPPRM:ASME + MOVOL:380V	AD
	9820 3000 27	1	SERVICE DIAGRAM	**(25/02/2019 - 04/02/2020)** CAPPRM:ASME + COOL:WATER + MOVOL:380V **(05/02/2020 - ...)** CAPPRM:ASME + MOVOL:380V	SD
	1622 3798 72	1	WIRE HARNESS	**(25/02/2019 - 04/02/2020)** CAPPRM:ASME + COOL:WATER + MOVOL:380V **(05/02/2020 - ...)** CAPPRM:ASME + MOVOL:380V	Comm Cable
	1622 5099 04	1	DI CHANE CABLE (1400MM)	**(25/02/2019 - 04/02/2020)** CAPPRM:ASME + COOL:WATER + MOVOL:380V **(05/02/2020 - ...)** CAPPRM:ASME + MOVOL:380V	
	Electrical legend:	Comm Cable Loose supply			
	1649 8006 00	1	CUBICLE	**(25/02/2019 - 04/02/2020)** CAPPRM:ASME + COOL:WATER + MOVOL:380V **(05/02/2020 - ...)** CAPPRM:ASME + MOVOL:380V	MSA
	1649 8001 31	1	PLATE NEOS "E"	**(25/02/2019 - 04/02/2020)** CAPPRM:ASME + COOL:WATER + MOVOL:380V **(05/02/2020 - ...)** CAPPRM:ASME + MOVOL:380V	
	Electrical legend:	Mounting plate			
	1649 8003 85	1	MOUNTING PLATE	**(25/02/2019 - 04/02/2020)** CAPPRM:ASME + COOL:WATER + MOVOL:380V **(05/02/2020 - ...)** CAPPRM:ASME + MOVOL:380V	
	Electrical legend:	Mounting plate			
	1649 8002 39	1	WIRE HARNESS	**(25/02/2019 - 04/02/2020)** CAPPRM:ASME + COOL:WATER + MOVOL:380V **(05/02/2020 - ...)** CAPPRM:ASME + MOVOL:380V	WH
	1649 8002 40	1	WIRE HARNESS	**(25/02/2019 - 04/02/2020)** CAPPRM:ASME + COOL:WATER + MOVOL:380V **(05/02/2020 - ...)** CAPPRM:ASME + MOVOL:380V	WH
	1649 8002 72	1	CABLE POWER	**(25/02/2019 - 04/02/2020)** CAPPRM:ASME + COOL:WATER + MOVOL:380V **(05/02/2020 - ...)** CAPPRM:ASME + MOVOL:380V	
	Electrical legend:	Full feature (FF) Drain			
	1649 8002 73	1	WIRE HARNESS	**(25/02/2019 - 04/02/2020)** CAPPRM:ASME + COOL:WATER + MOVOL:380V **(05/02/2020 - ...)** CAPPRM:ASME + MOVOL:380V	
	Electrical legend:	Pack Drain + Air filter switch			
	1649 8002 75	1	WIRE HARNESS	**(25/02/2019 - 04/02/2020)** CAPPRM:ASME + COOL:WATER + MOVOL:380V **(05/02/2020 - ...)** CAPPRM:ASME + MOVOL:380V	
	Electrical legend:	Relative Humidity sensor			
	1649 8001 43	3	MOTOR CABLE	**(25/02/2019 - 04/02/2020)** CAPPRM:ASME + COOL:WATER + MOVOL:380V **(05/02/2020 - ...)** CAPPRM:ASME + MOVOL:380V	
	Electrical legend:	Motor conduit			
	1649 8001 46	1	MOTOR CABLE	**(25/02/2019 - 04/02/2020)** CAPPRM:ASME + COOL:WATER + MOVOL:380V **(05/02/2020 - ...)** CAPPRM:ASME + MOVOL:380V	
	Electrical legend:	Motor conduit			
	1625 3906 31	1	DATA LABEL	**(25/02/2019 - 04/02/2020)** CAPPRM:ASME + COOL:WATER + MOVOL:380V **(05/02/2020 - ...)** CAPPRM:ASME + MOVOL:380V	Label
	1079 9901 68	1	WARNING LABEL	**(25/02/2019 - 04/02/2020)** CAPPRM:ASME + COOL:WATER + MOVOL:380V **(05/02/2020 - ...)** CAPPRM:ASME + MOVOL:380V	Label

Legend:

CAPPRE:IEC - Component approval electrical:IEC
FREQ:60HZ - Frequency:60 Hz
MOVOL:200V - Supply voltage:200 V
CAPPRM:ASME - Component approval mechanical:ASME
IDRY:Y - Integrated dryer:Yes
MOVOL:380V - Supply voltage:380 V
COOL:WATER - Cooling:Water cooled
MODEL:GA110VP_16 - Model:GA 110VSD+

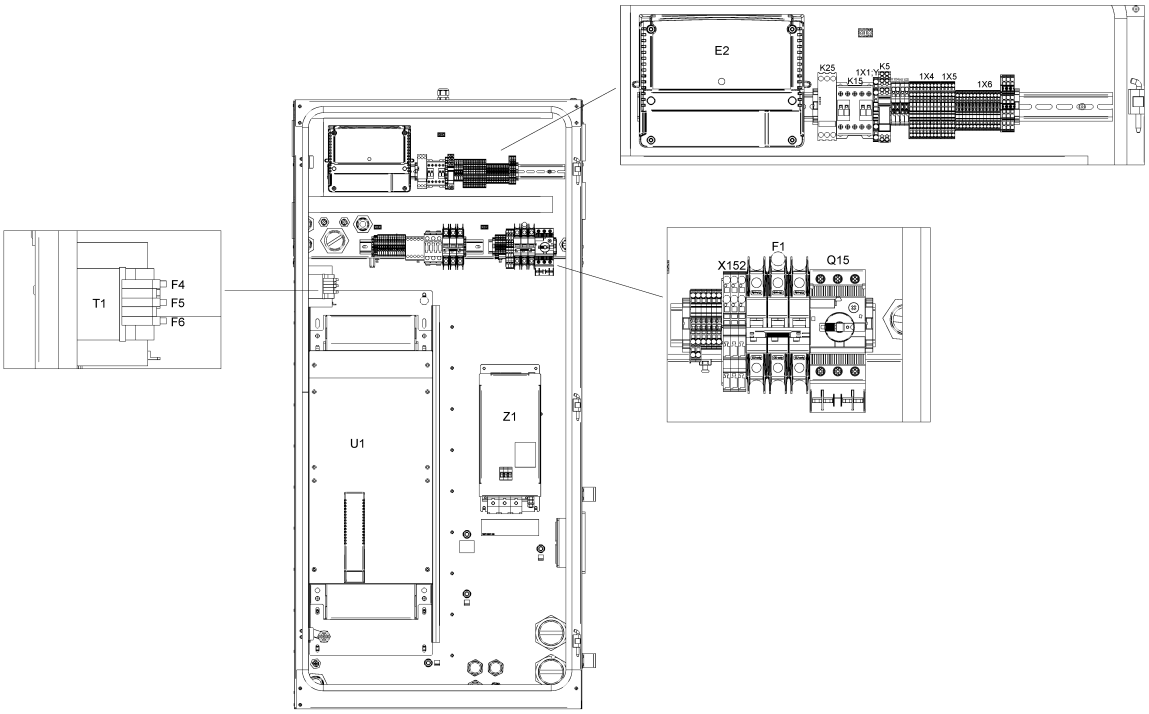
E2
K25
K15
1X1
K5
1X4
1X5
1X6
T1
F4
F5
F6
F1
X152
Q15
U1
Z1

Ref	Part Number	Qty	Name	Validity	EL
	1649 8005 00	0	LABEL	**(25/02/2019 - 04/02/2020)** CAPPRM:ASME + COOL:WATER + MOVOL:380V **(05/02/2020 - ...)** CAPPRM:ASME + MOVOL:380V	Label
	1900 5350 18	1	INVERTER	**(25/02/2019 - 04/02/2020)** CAPPRM:ASME + COOL:WATER + MOVOL:380V **(05/02/2020 - ...)** CAPPRM:ASME + MOVOL:380V	U1
	1631 2079 00	1	NANOPERMRING	**(25/02/2019 - 04/02/2020)** CAPPRM:ASME + COOL:WATER + MOVOL:380V **(05/02/2020 - ...)** CAPPRM:ASME + MOVOL:380V	
	Electrical legend:	Nanoperm ring			
	0697 9811 17	2	PLUG	**(25/02/2019 - 04/02/2020)** CAPPRM:ASME + COOL:WATER + MOVOL:380V **(05/02/2020 - ...)** CAPPRM:ASME + MOVOL:380V	
	Electrical legend:	Plug for transfo supply			
	0989 3700 48	2	NUT	**(25/02/2019 - 04/02/2020)** CAPPRM:ASME + COOL:WATER + MOVOL:380V **(05/02/2020 - ...)** CAPPRM:ASME + MOVOL:380V	
	Electrical legend:	Nut for transfo supply			
	0698 5140 72	1	CABLE GLAND VC	**(25/02/2019 - 04/02/2020)** CAPPRM:ASME + COOL:WATER + MOVOL:380V **(05/02/2020 - ...)** CAPPRM:ASME + MOVOL:380V	Fan
	0698 5140 71	1	CABLE GLAND	**(25/02/2019 - 04/02/2020)** CAPPRM:ASME + COOL:WATER + MOVOL:380V **(05/02/2020 - ...)** CAPPRM:ASME + MOVOL:380V	
	Electrical legend:	Ambient sensor			
	0697 9809 20	1	LOCKNUT	**(25/02/2019 - 04/02/2020)** CAPPRM:ASME + COOL:WATER + MOVOL:380V **(05/02/2020 - ...)** CAPPRM:ASME + MOVOL:380V	
	Electrical legend:	Ambient sensor			
	1089 9556 44	1	FAN WITH FILTER	**(25/02/2019 - 04/02/2020)** CAPPRM:ASME + COOL:WATER + MOVOL:380V **(05/02/2020 - ...)** CAPPRM:ASME + MOVOL:380V	Cubicle fan
	1089 9556 72	4	AIR INLET WITHOUT FILTER	**(25/02/2019 - 04/02/2020)** CAPPRM:ASME + COOL:WATER + MOVOL:380V **(05/02/2020 - ...)** CAPPRM:ASME + MOVOL:380V	Filter grid
	1088 0032 09	1	CONNECTOR	**(25/02/2019 - 04/02/2020)** CAPPRM:ASME + COOL:WATER + MOVOL:380V **(05/02/2020 - ...)** CAPPRM:ASME + MOVOL:380V	X3
	1089 9572 04	1	LINE FILTER	**(25/02/2019 - 04/02/2020)** CAPPRM:ASME + COOL:WATER + MOVOL:380V **(05/02/2020 - ...)** CAPPRM:ASME + MOVOL:380V	Z1 for 110kw
	Electrical legend:	Z1 for 110kw			
	1089 9562 04	1	STRAP	**(25/02/2019 - 04/02/2020)** CAPPRM:ASME + COOL:WATER + MOVOL:380V **(05/02/2020 - ...)** CAPPRM:ASME + MOVOL:380V	HF-screen
	1089 9514 56	1	TRANSFORMER	**(25/02/2019 - 04/02/2020)** CAPPRM:ASME + COOL:WATER + MOVOL:380V **(05/02/2020 - ...)** CAPPRM:ASME + MOVOL:380V	T1
	1089 9522 26	1	CIRCUIT BREAKER	**(25/02/2019 - 04/02/2020)** CAPPRM:ASME + COOL:WATER + MOVOL:380V **(05/02/2020 - ...)** CAPPRM:ASME + MOVOL:380V	F1
	1089 9513 41	1	PUSH BUTTON	**(25/02/2019 - 04/02/2020)** CAPPRM:ASME + COOL:WATER + MOVOL:380V **(05/02/2020 - ...)** CAPPRM:ASME + MOVOL:380V	S3
	1089 9513 28	1	HOLDER	**(25/02/2019 - 04/02/2020)** CAPPRM:ASME + COOL:WATER + MOVOL:380V **(05/02/2020 - ...)** CAPPRM:ASME + MOVOL:380V	S3

Legend:

CAPPRE:IEC - Component approval electrical:IEC
FREQ:60HZ - Frequency:60 Hz
MOVOL:200V - Supply voltage:200 V
CAPPRM:ASME - Component approval mechanical:ASME
IDRY:Y - Integrated dryer:Yes
MOVOL:380V - Supply voltage:380 V
COOL:WATER - Cooling:Water cooled
MODEL:GA110VP_16 - Model:GA 110VSD+

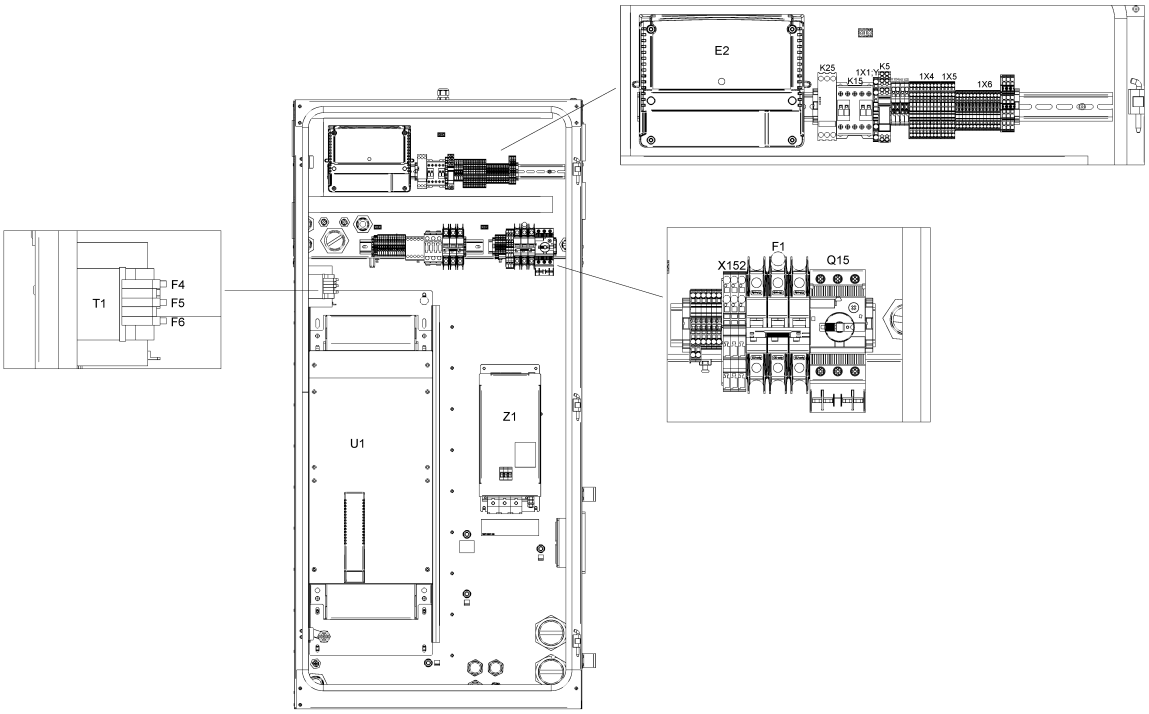
E2
K25
K15
1X1
K5
1X4
1X5
1X6
T1
F4
F5
F6
U1
Z1
F1
X152
Q15

Ref	Part Number	Qty	Name	Validity	EL
	~~1089 9513 30~~	4	CONTACTOR	**(25/02/2019 - 04/02/2020)** CAPPRM:ASME + COOL:WATER + MOVOL:380V **(05/02/2020 - ...)** CAPPRM:ASME + MOVOL:380V	S3
	Substituted by:	1089 9513 04 - CONTACT BLOCK (quantity: 1)			
	1088 0039 07	3	TERMINAL	**(25/02/2019 - 04/02/2020)** CAPPRM:ASME + COOL:WATER + MOVOL:380V **(05/02/2020 - ...)** CAPPRM:ASME + MOVOL:380V	X152
	1088 0039 05	1	PLATE	**(25/02/2019 - 04/02/2020)** CAPPRM:ASME + COOL:WATER + MOVOL:380V **(05/02/2020 - ...)** CAPPRM:ASME + MOVOL:380V	X152
	1088 0039 26	1	CONNECTOR	**(25/02/2019 - 04/02/2020)** CAPPRM:ASME + COOL:WATER + MOVOL:380V **(05/02/2020 - ...)** CAPPRM:ASME + MOVOL:380V	
	Electrical legend:	X152 (remove coding pin 1,3)			
	1088 0037 99	4	PIN	**(25/02/2019 - 04/02/2020)** CAPPRM:ASME + COOL:WATER + MOVOL:380V **(05/02/2020 - ...)** CAPPRM:ASME + MOVOL:380V	X152:1; 3
	~~1088 0031 81~~	7	END STOP BRACKET 6MM	**(25/02/2019 - 04/02/2020)** CAPPRM:ASME + COOL:WATER + MOVOL:380V **(05/02/2020 - ...)** CAPPRM:ASME + MOVOL:380V	
	Electrical legend:	Connector/terminal rail			
	Substituted by:	1089 0577 82 - END RETAINER (quantity: 1)			
	1088 0039 38	2	TERMINAL	**(25/02/2019 - 04/02/2020)** CAPPRM:ASME + COOL:WATER + MOVOL:380V **(05/02/2020 - ...)** CAPPRM:ASME + MOVOL:380V	1X11:2,5
	1088 0039 40	1	PLATE	**(25/02/2019 - 04/02/2020)** CAPPRM:ASME + COOL:WATER + MOVOL:380V **(05/02/2020 - ...)** CAPPRM:ASME + MOVOL:380V	1X11
	1088 0039 34	4	TERMINAL	**(25/02/2019 - 04/02/2020)** CAPPRM:ASME + COOL:WATER + MOVOL:380V **(05/02/2020 - ...)** CAPPRM:ASME + MOVOL:380V	
	Electrical legend:	1X11:30,301,34			
	1088 0039 35	1	PLATE	**(25/02/2019 - 04/02/2020)** CAPPRM:ASME + COOL:WATER + MOVOL:380V **(05/02/2020 - ...)** CAPPRM:ASME + MOVOL:380V	1X11
	1088 0039 04	2	TERMINAL	**(25/02/2019 - 04/02/2020)** CAPPRM:ASME + COOL:WATER + MOVOL:380V **(05/02/2020 - ...)** CAPPRM:ASME + MOVOL:380V	X104a
	1088 0037 99	2	PIN	**(25/02/2019 - 04/02/2020)** CAPPRM:ASME + COOL:WATER + MOVOL:380V **(05/02/2020 - ...)** CAPPRM:ASME + MOVOL:380V	X104a/X105
	1088 0039 02	1	PLATE	**(25/02/2019 - 04/02/2020)** CAPPRM:ASME + COOL:WATER + MOVOL:380V **(05/02/2020 - ...)** CAPPRM:ASME + MOVOL:380V	X104a
	1088 0039 07	2	TERMINAL	**(25/02/2019 - 04/02/2020)** CAPPRM:ASME + COOL:WATER + MOVOL:380V **(05/02/2020 - ...)** CAPPRM:ASME + MOVOL:380V	X105
	1088 0039 05	1	PLATE	**(25/02/2019 - 04/02/2020)** CAPPRM:ASME + COOL:WATER + MOVOL:380V **(05/02/2020 - ...)** CAPPRM:ASME + MOVOL:380V	X105
	1088 0039 34	13	TERMINAL	**(25/02/2019 - 04/02/2020)** CAPPRM:ASME + COOL:WATER + MOVOL:380V **(05/02/2020 - ...)** CAPPRM:ASME + MOVOL:380V	1X6
	1088 0037 69	3	CONNECTOR	**(25/02/2019 - 04/02/2020)** CAPPRM:ASME + COOL:WATER + MOVOL:380V **(05/02/2020 - ...)** CAPPRM:ASME + MOVOL:380V	1X7

Legend:

CAPPRE:IEC - Component approval electrical:IEC
FREQ:60HZ - Frequency:60 Hz
MOVOL:200V - Supply voltage:200 V
CAPPRM:ASME - Component approval mechanical:ASME
IDRY:Y - Integrated dryer:Yes
MOVOL:380V - Supply voltage:380 V
COOL:WATER - Cooling:Water cooled
MODEL:GA110VP_16 - Model:GA 110VSD+

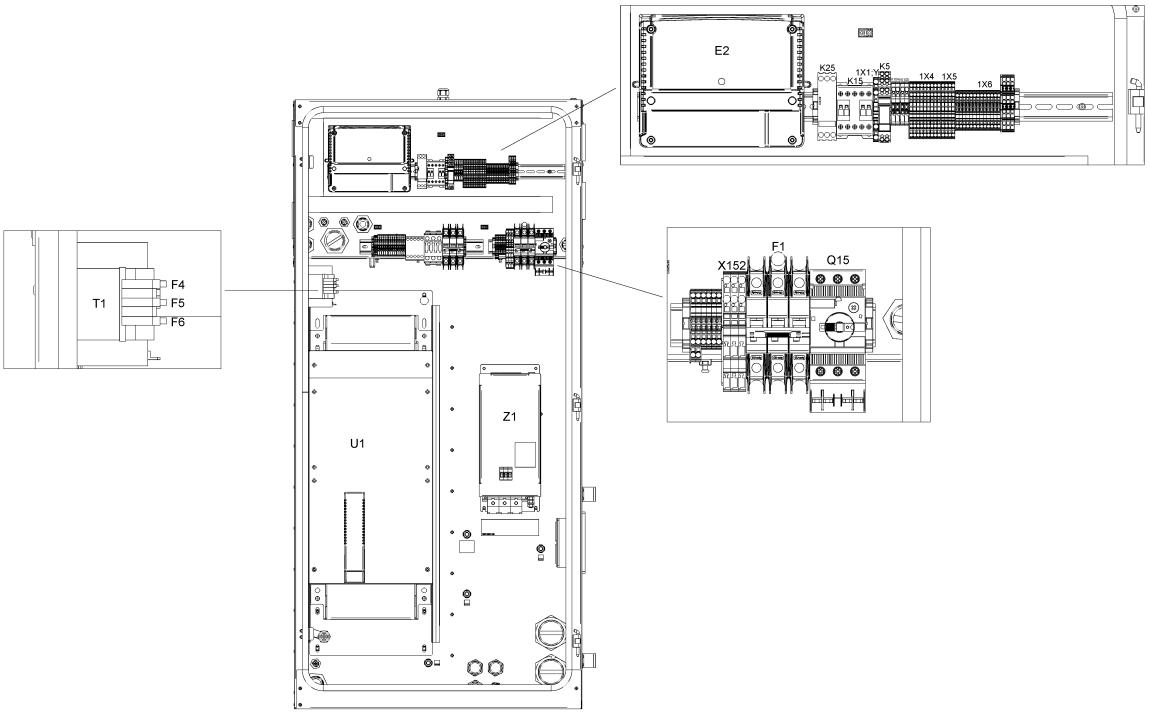
E2
K25
K15
1X1
K5
1X4
1X5
1X6
T1
F4
F5
F6
F1
X152
Q15
U1
Z1

21.31 - Cubicle components GA 110 VSD+ - 200V-380V/60Hz - IEC - Full-Feature (05/02/2020 - ...)

(MOVOL:200V , MOVOL:380V) + CAPPRE:IEC + FREQ:60HZ + IDRY:Y + MODEL:GA110VP_16

Ref	Part Number	Qty	Name	Validity	EL
	1088 0039 35	1	PLATE	**(25/02/2019 - 04/02/2020)** CAPPRM:ASME + COOL:WATER + MOVOL:380V **(05/02/2020 - ...)** CAPPRM:ASME + MOVOL:380V	1X6
	1088 0040 37	1	END PLATE	**(25/02/2019 - 04/02/2020)** CAPPRM:ASME + COOL:WATER + MOVOL:380V **(05/02/2020 - ...)** CAPPRM:ASME + MOVOL:380V	1X7
	1088 0039 36	9	TERMINAL	**(25/02/2019 - 04/02/2020)** CAPPRM:ASME + COOL:WATER + MOVOL:380V **(05/02/2020 - ...)** CAPPRM:ASME + MOVOL:380V	1X4
	1088 0039 36	4	TERMINAL	**(25/02/2019 - 04/02/2020)** CAPPRM:ASME + COOL:WATER + MOVOL:380V **(05/02/2020 - ...)** CAPPRM:ASME + MOVOL:380V	1X6
	1088 0039 37	1	END PLATE	**(25/02/2019 - 04/02/2020)** CAPPRM:ASME + COOL:WATER + MOVOL:380V **(05/02/2020 - ...)** CAPPRM:ASME + MOVOL:380V	1X4
	1088 0039 37	1	END PLATE	**(25/02/2019 - 04/02/2020)** CAPPRM:ASME + COOL:WATER + MOVOL:380V **(05/02/2020 - ...)** CAPPRM:ASME + MOVOL:380V	1X6
	1088 0039 37	1	END PLATE	**(25/02/2019 - 04/02/2020)** CAPPRM:ASME + COOL:WATER + MOVOL:380V **(05/02/2020 - ...)** CAPPRM:ASME + MOVOL:380V	1X1:Y/D
	1088 0037 81	1	CONNECTOR	**(25/02/2019 - 04/02/2020)** CAPPRM:ASME + COOL:WATER + MOVOL:380V **(05/02/2020 - ...)** CAPPRM:ASME + MOVOL:380V	2X27
	1088 0037 80	1	CONNECTOR	**(25/02/2019 - 04/02/2020)** CAPPRM:ASME + COOL:WATER + MOVOL:380V **(05/02/2020 - ...)** CAPPRM:ASME + MOVOL:380V	2X28
	1088 0031 32	1	CONNECTOR	**(25/02/2019 - 04/02/2020)** CAPPRM:ASME + COOL:WATER + MOVOL:380V **(05/02/2020 - ...)** CAPPRM:ASME + MOVOL:380V	2X30
	1088 0031 26	1	CONNECTOR 6-POLE	**(25/02/2019 - 04/02/2020)** CAPPRM:ASME + COOL:WATER + MOVOL:380V **(05/02/2020 - ...)** CAPPRM:ASME + MOVOL:380V	2X31
	~~1089 9664 06~~	1	SWITCH	**(25/02/2019 - 04/02/2020)** CAPPRM:ASME + COOL:WATER + MOVOL:380V **(05/02/2020 - ...)** CAPPRM:ASME + MOVOL:380V	Q15
	Substituted by:	1089 9551 97 - AUX.CONTACT CIRCUIT BREAKER (quantity: 1)			
	1089 9551 19	1	CIRCUIT BREAKER	**(25/02/2019 - 04/02/2020)** CAPPRM:ASME + COOL:WATER + MOVOL:380V **(05/02/2020 - ...)** CAPPRM:ASME + MOVOL:380V	Q15
	1088 0038 26	1	TERMINAL	**(25/02/2019 - 04/02/2020)** CAPPRM:ASME + COOL:WATER + MOVOL:380V **(05/02/2020 - ...)** CAPPRM:ASME + MOVOL:380V	1X1:Y/D
	1089 9602 79	1	CONTACTOR 110 V	**(25/02/2019 - 04/02/2020)** CAPPRM:ASME + COOL:WATER + MOVOL:380V **(05/02/2020 - ...)** CAPPRM:ASME + MOVOL:380V	K15
	1089 9461 26	1	PHASE SEQUENCE RELAY	**(25/02/2019 - 04/02/2020)** CAPPRM:ASME + COOL:WATER + MOVOL:380V **(05/02/2020 - ...)** CAPPRM:ASME + MOVOL:380V	K25
	1088 0032 17	1	RELAY 115 VAC	**(25/02/2019 - 04/02/2020)** CAPPRM:ASME + COOL:WATER + MOVOL:380V **(05/02/2020 - ...)** CAPPRM:ASME + MOVOL:380V	K5
	0991 8011 21	AR	CABLE TRAY	**(25/02/2019 - 04/02/2020)** CAPPRM:ASME + COOL:WATER + MOVOL:380V **(05/02/2020 - ...)** CAPPRM:ASME + MOVOL:380V	L=1384mm

Legend:

CAPPRE:IEC - Component approval electrical:IEC
FREQ:60HZ - Frequency:60 Hz
MOVOL:200V - Supply voltage:200 V
CAPPRM:ASME - Component approval mechanical:ASME
IDRY:Y - Integrated dryer:Yes
MOVOL:380V - Supply voltage:380 V
COOL:WATER - Cooling:Water cooled
MODEL:GA110VP_16 - Model:GA 110VSD+

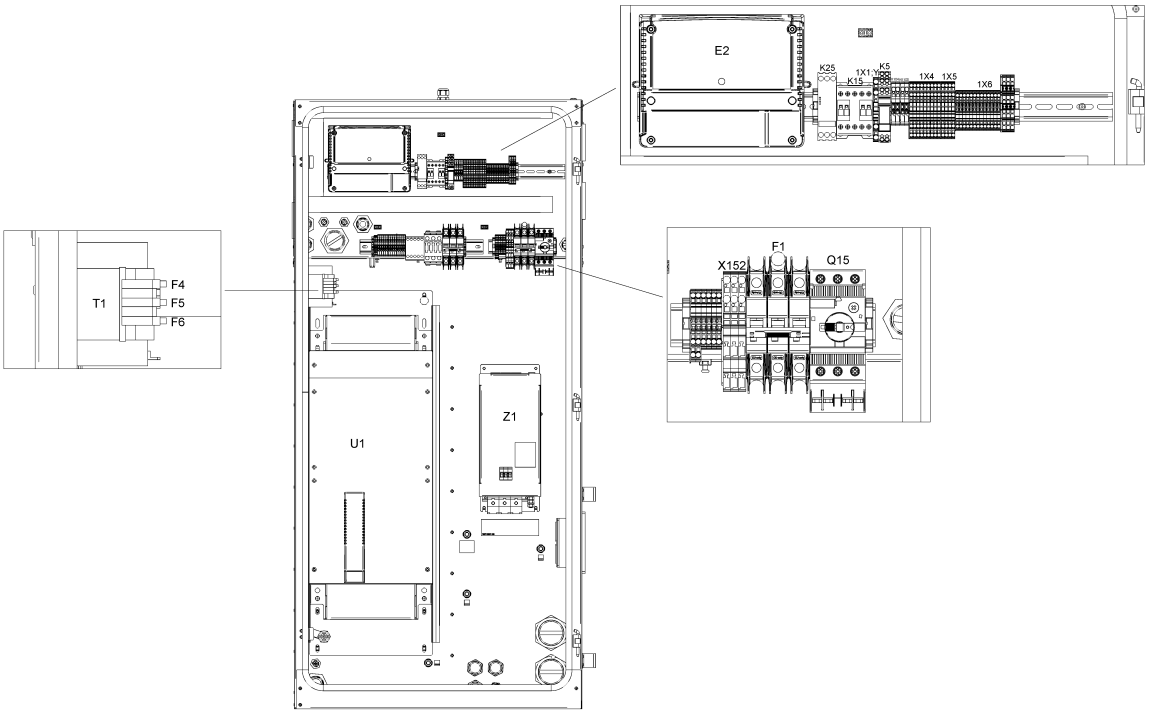
E2
K25
K15
1X1
K5
1X4
1X5
1X6
T1
F4
F5
F6
F1
X152
Q15
U1
Z1

21.31 - Cubicle components GA 110 VSD+ - 200V-380V/60Hz - IEC - Full-Feature (05/02/2020 - ...)

(MOVOL:200V , MOVOL:380V) + CAPPRE:IEC + FREQ:60HZ + IDRY:Y + MODEL:GA110VP_16

Ref	Part Number	Qty	Name	Validity	EL
	1900 2203 01	1	DRYER RAIL	**(25/02/2019 - 04/02/2020)** CAPPRM:ASME + COOL:WATER + MOVOL:380V **(05/02/2020 - ...)** CAPPRM:ASME + MOVOL:380V	
	Electrical legend:	With trafo on dryer			
	1088 0031 13	1	CONNECTOR 13-POLE	**(25/02/2019 - 04/02/2020)** CAPPRM:ASME + COOL:WATER + MOVOL:380V **(05/02/2020 - ...)** CAPPRM:ASME + MOVOL:380V	1X30
	1088 0037 82	1	CONNECTOR	**(25/02/2019 - 04/02/2020)** CAPPRM:ASME + COOL:WATER + MOVOL:380V **(05/02/2020 - ...)** CAPPRM:ASME + MOVOL:380V	3X34
	0697 9811 13	1	PLUG	**(25/02/2019 - 04/02/2020)** CAPPRM:ASME + COOL:WATER + MOVOL:380V **(05/02/2020 - ...)** CAPPRM:ASME + MOVOL:380V	
	Electrical legend:	Energy recovery			
	0989 3700 44	1	LOCKNUT	**(25/02/2019 - 04/02/2020)** CAPPRM:ASME + COOL:WATER + MOVOL:380V **(05/02/2020 - ...)** CAPPRM:ASME + MOVOL:380V	
	Electrical legend:	Energy recovery			
	0697 9811 12	1	PLUG	**(25/02/2019 - 04/02/2020)** CAPPRM:ASME + COOL:WATER + MOVOL:380V **(05/02/2020 - ...)** CAPPRM:ASME + MOVOL:380V	
	Electrical legend:	Control circuit of T10			
	0989 3700 43	1	NUT	**(25/02/2019 - 04/02/2020)** CAPPRM:ASME + COOL:WATER + MOVOL:380V **(05/02/2020 - ...)** CAPPRM:ASME + MOVOL:380V	
	Electrical legend:	Control circuit of T10			
	0697 9811 10	1	PLUG	**(25/02/2019 - 04/02/2020)** CAPPRM:ASME + COOL:WATER + MOVOL:380V **(05/02/2020 - ...)** CAPPRM:ASME + MOVOL:380V	
	Electrical legend:	Plug for smartbox hole			
	0989 3700 41	1	LOCKNUT	**(25/02/2019 - 04/02/2020)** CAPPRM:ASME + COOL:WATER + MOVOL:380V **(05/02/2020 - ...)** CAPPRM:ASME + MOVOL:380V	
	Electrical legend:	Nut for smartbox hole			
	1089 9556 37	1	AIR INLET WITH FILTER	**(25/02/2019 - 04/02/2020)** CAPPRM:ASME + COOL:WATER + MOVOL:380V **(05/02/2020 - ...)** CAPPRM:ASME + MOVOL:380V	Fan Filter

Legend:

CAPPRE:IEC - Component approval electrical:IEC
FREQ:60HZ - Frequency:60 Hz
MOVOL:200V - Supply voltage:200 V
CAPPRM:ASME - Component approval mechanical:ASME
IDRY:Y - Integrated dryer:Yes
MOVOL:380V - Supply voltage:380 V
COOL:WATER - Cooling:Water cooled
MODEL:GA110VP_16 - Model:GA 110VSD+

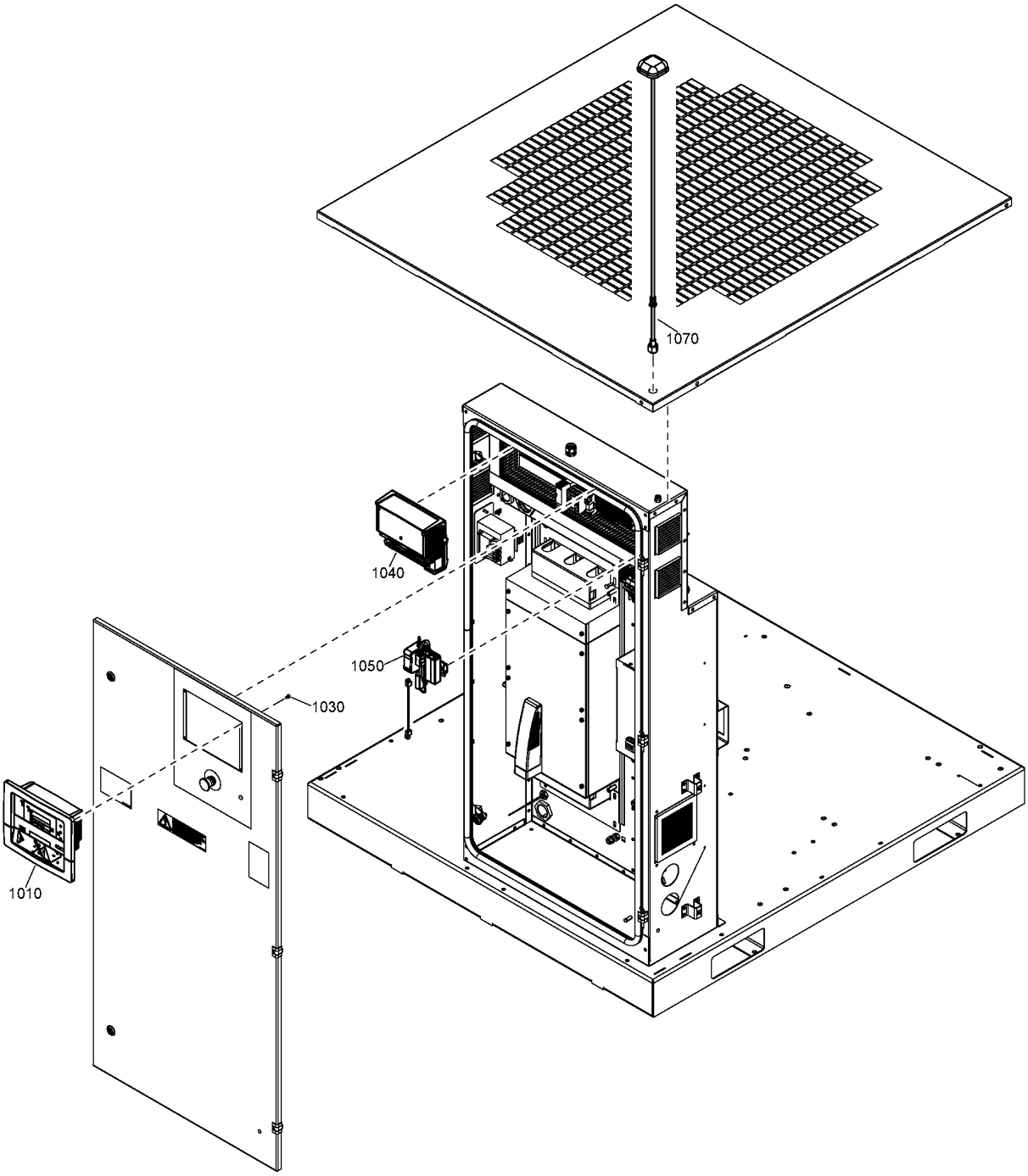
1070
1040
1050
1030
1010

Ref	Part Number	Qty	Name	Validity
1010	1900 5200 13	1	ELEKTRONIKON™ GRAPHIC CONTROLLER	**(02/03/2017 - 11/12/2018)**
1030	0147 1169 03	4	HEXAGON BOLT	**(02/03/2017 - ...)**
1040	1900 5200 33	1	I/O2 MODULE	**(06/07/2017 - ...)**
1050	~~1630 0707 82~~	1	MODEM KIT	**(02/03/2017 - 11/12/2018)**
	Substituted by:	2230 1600 00 - KIT SMARTBOX 3G (quantity: 1)		
1070	~~1630 0928 01~~	1	ANTENNA	**(02/03/2017 - 11/12/2018)**
	Substituted by:	1630 0928 04 - ANTENNA (quantity: 1)		

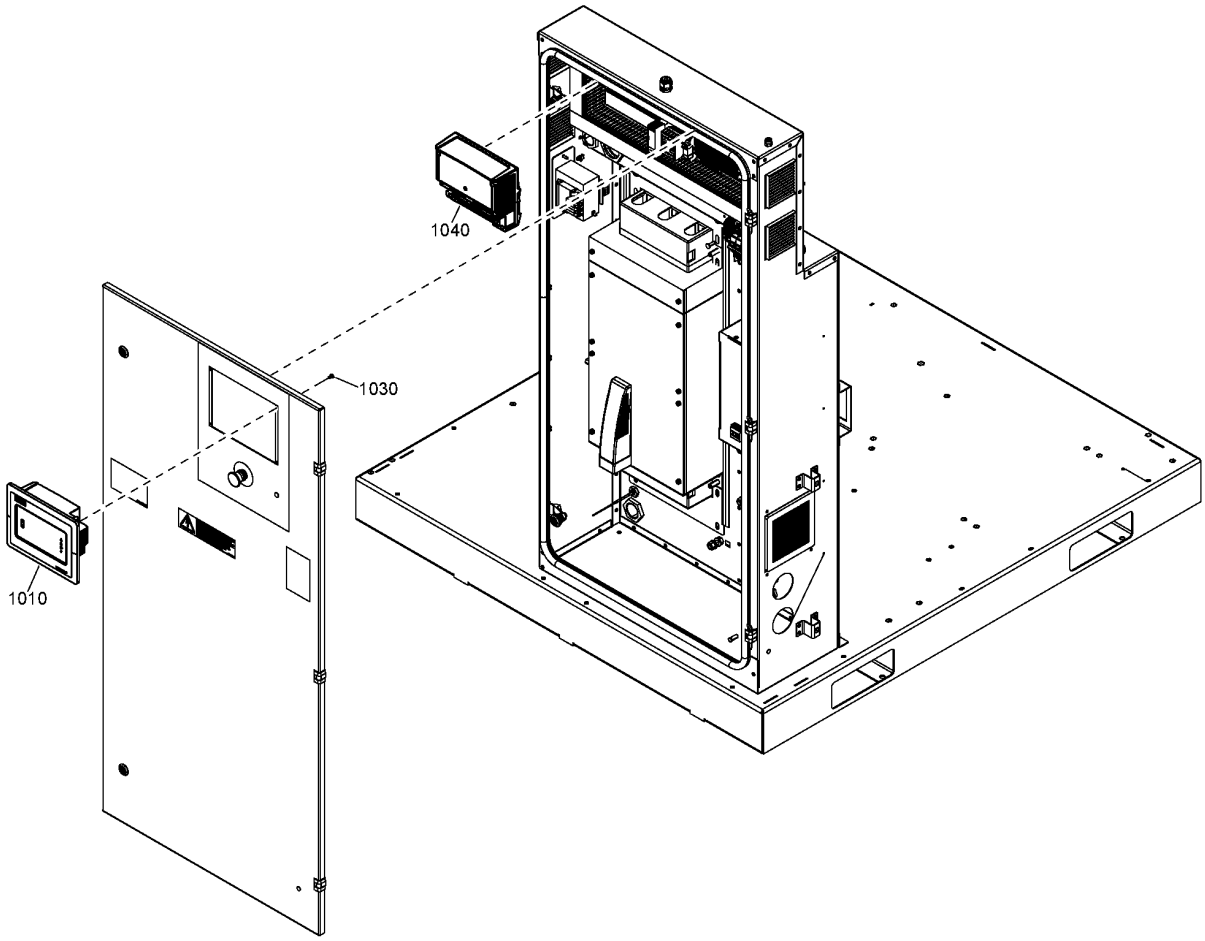
1040
1030
1010

Ref	Part Number	Qty	Name	Validity
1010	1900 5204 00	1	ELEKTRONIKON™ TOUCH CONTROLLER	(12/12/2018 - ...)
1030	0147 1169 03	4	HEXAGON BOLT	(02/03/2017 - ...)
1040	1900 5200 33	1	I/O2 MODULE	(06/07/2017 - ...)

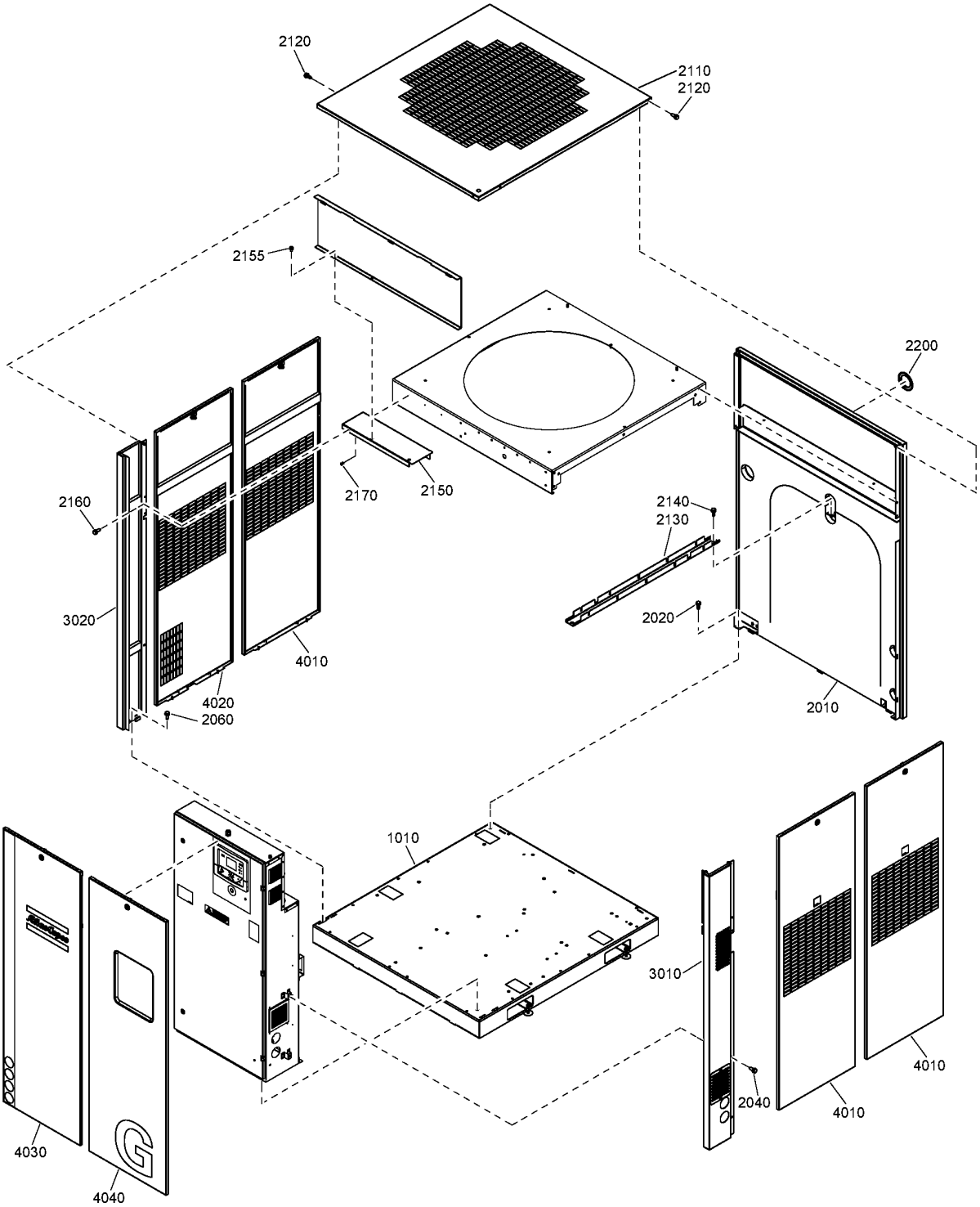
2120
2110
2120
2155
2200
2160
2170
2150
2140
2130
3020
2020
4010
4020
2060
2010
1010
3010
2040
4010
4010
4030
4040

Ref	Part Number	Qty	Name	Validity
1010	1649 8001 40	1	FRAME	**(02/03/2017 - 12/07/2017)** (FREQ:50HZ + MOVOL:400V , FREQ:60HZ + MOVOL:460V) **(13/07/2017 - ...)**
	• 1079 9923 72	1	LABEL ELECTRICAL EARTHING	
	• 1622 0000 20	5	DECAL SYMBOLS	
2010	1649 8003 09	1	BACK PANEL	**(02/03/2017 - 12/07/2017)** (FREQ:50HZ + MOVOL:400V , FREQ:60HZ + MOVOL:460V) **(13/07/2017 - ...)**
	• 1079 9932 40	1	DECAL PURGE	
2020	0147 1963 08	4	SCREW	**(05/05/2017 - 12/07/2017)** (FREQ:50HZ + MOVOL:400V , FREQ:60HZ + MOVOL:460V) **(13/07/2017 - ...)**
2040	0147 1963 08	4	SCREW	**(02/03/2017 - 12/07/2017)** (FREQ:50HZ + MOVOL:400V , FREQ:60HZ + MOVOL:460V) **(13/07/2017 - ...)**
2060	0147 1963 08	5	SCREW	**(05/05/2017 - 12/07/2017)** (FREQ:50HZ + MOVOL:400V , FREQ:60HZ + MOVOL:460V) **(13/07/2017 - ...)**
2110	1649 8001 77	1	ROOF	**(02/03/2017 - 12/07/2017)** (FREQ:50HZ + MOVOL:400V , FREQ:60HZ + MOVOL:460V) **(13/07/2017 - ...)**
2120	0147 1963 08	5	SCREW	**(05/05/2017 - 12/07/2017)** (FREQ:50HZ + MOVOL:400V , FREQ:60HZ + MOVOL:460V) **(13/07/2017 - ...)**
2130	1649 8001 73	1	SUPPORT	**(02/03/2017 - 12/07/2017)** (FREQ:50HZ + MOVOL:400V , FREQ:60HZ + MOVOL:460V) **(13/07/2017 - ...)**
2140	0147 1963 08	2	SCREW	**(02/03/2017 - 12/07/2017)** (FREQ:50HZ + MOVOL:400V , FREQ:60HZ + MOVOL:460V) **(13/07/2017 - ...)**
2150	1649 8001 64	1	COVER PLATE	**(02/03/2017 - 12/07/2017)** (FREQ:50HZ + MOVOL:400V , FREQ:60HZ + MOVOL:460V) **(13/07/2017 - ...)**
2155	1079 1472 05	1	HEXAGON BOLT	**(18/09/2018 - ...)**
2160	0147 1963 08	1	SCREW	**(02/03/2017 - 12/07/2017)** (FREQ:50HZ + MOVOL:400V , FREQ:60HZ + MOVOL:460V) **(13/07/2017 - ...)**
2170	0129 3270 46	3	BLIND RIVET	**(02/03/2017 - 12/07/2017)** (FREQ:50HZ + MOVOL:400V , FREQ:60HZ + MOVOL:460V) **(13/07/2017 - ...)**
2200	1625 4044 00	1	SEAL	**(02/03/2017 - 12/07/2017)** (FREQ:50HZ + MOVOL:400V , FREQ:60HZ + MOVOL:460V) **(13/07/2017 - ...)**
3010	1649 8002 70	1	RIGHT BEAM	**(28/08/2017 - ...)**
	• 1625 3903 72	2	PLUG	**(17/10/2017 - ...)**
3020	1649 8002 44	1	LEFT BEAM	**(28/08/2017 - ...)**
4010	1649 8001 55	3	SIDE PANEL	**(28/08/2017 - ...)**
4020	1649 8003 03	1	SIDE PANEL	**(28/08/2017 - ...)**
	• 1629 0317 38	1	LOCK	
4030	1649 8001 53	1	LEFT FRONT PANEL	**(28/08/2017 - ...)**
	• 1629 0317 38	1	LOCK	
	• 1622 4477 10	1	DECAL	
	• 0690 1132 01	1	HOUSE MARK	
	• 1625 2201 52	1	DECAL	
	•• 1625 2201 41	0	DECAL	
4040	1649 8001 51	1	RIGHT FRONT PANEL	**(28/08/2017 - ...)**
	• 1629 0317 38	1	LOCK	

Remarks:

SELF-ADHESIVE INSULATION FOAM: THICKNESS:10MM / PART NUMBER:0395 6001 62 / SHEET DIMENSIONS: 2040MM X 1650MM
SELF-ADHESIVE INSULATION FOAM: THICKNESS:20MM / PART NUMBER:0395 6001 64 / SHEET DIMENSIONS: 2040MM X 1650MM
SELF-ADHESIVE INSULATION FOAM: THICKNESS:25MM / PART NUMBER:0395 6001 66 / SHEET DIMENSIONS: 2040MM X 1650MM
SELF-ADHESIVE INSULATION FOAM: THICKNESS:30MM / PART NUMBER:0395 6001 67 / SHEET DIMENSIONS: 2040MM X 1650MM
SELF-ADHESIVE INSULATION FOAM: THICKNESS:40MM / PART NUMBER:0395 6001 68 / SHEET DIMENSIONS: 2040MM X 1650MM
SELF-ADHESIVE INSULATION FOAM: THICKNESS:50MM / PART NUMBER:0395 6001 69 / SHEET DIMENSIONS: 2040MM X 1650MM

Legend:

FREQ:50HZ - Frequency:50 Hz
MOVOL:380V - Supply voltage:380 V
FREQ:60HZ - Frequency:60 Hz
MOVOL:400V - Supply voltage:400 V
IDRY:N - Integrated dryer:No
MOVOL:460V - Supply voltage:460 V

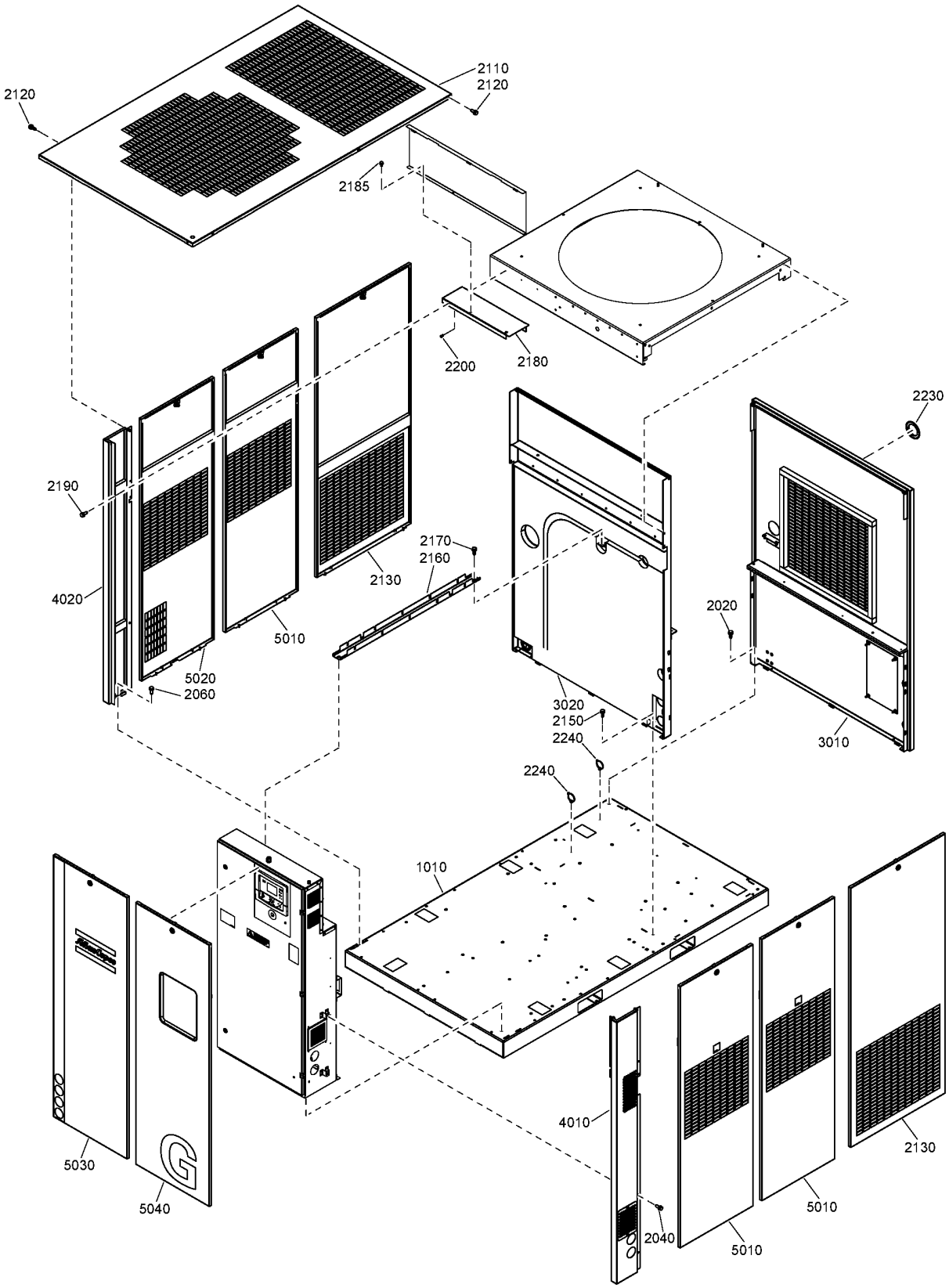
2110
2120
2120
2185
2200
2180
2230
2190
2170
2160
2130
4020
5010
2020
5020
2060
3020
2150
2240
3010
2240
1010
4010
2130
5030
5040
5010
2040
5010

Ref	Part Number	Qty	Name	Validity
1010	1649 8001 37	1	FRAME ASSEMBLY	**(13/07/2017 - ...)**
	• 1079 9923 72	1	LABEL ELECTRICAL EARTHING	**(02/03/2017 - 12/07/2017)** ((MOVOL:380V , MOVOL:575V) + FREQ:60HZ , FREQ:50HZ + MOVOL:400V) **(13/07/2017 - ...)** ((MOVOL:380V , MOVOL:460V) + IDRY:Y , MOVOL:200V , MOVOL:230V , MOVOL:575V) + FREQ:60HZ , (IDRY:Y + MOVOL:400V , MOVOL:200V , MOVOL:500V) + FREQ:50HZ
	• 1622 0000 20	7	DECAL SYMBOLS	**(02/03/2017 - 12/07/2017)** ((MOVOL:380V , MOVOL:575V) + FREQ:60HZ , FREQ:50HZ + MOVOL:400V) **(13/07/2017 - ...)** ((MOVOL:380V , MOVOL:460V) + IDRY:Y , MOVOL:200V , MOVOL:230V , MOVOL:575V) + FREQ:60HZ , (IDRY:Y + MOVOL:400V , MOVOL:200V , MOVOL:500V) + FREQ:50HZ
2020	0147 1963 08	8	SCREW	**(28/08/2017 - ...)**
2040	0147 1963 08	4	SCREW	**(02/03/2017 - 12/07/2017)** (FREQ:50HZ + MOVOL:400V , FREQ:60HZ + MOVOL:380V) **(13/07/2017 - ...)**
2060	0147 1963 08	5	SCREW	**(05/05/2017 - 12/07/2017)** (FREQ:50HZ + MOVOL:400V , FREQ:60HZ + MOVOL:380V) **(13/07/2017 - ...)**
2110	1649 8001 62	1	ROOF	**(02/03/2017 - 12/07/2017)** (FREQ:50HZ + MOVOL:400V , FREQ:60HZ + MOVOL:380V) **(13/07/2017 - ...)**
2120	0147 1963 08	7	SCREW	**(05/05/2017 - 12/07/2017)** (FREQ:50HZ + MOVOL:400V , FREQ:60HZ + MOVOL:380V) **(13/07/2017 - ...)**
2130	1649 8001 57	2	SIDE PANEL	**(02/03/2017 - 12/07/2017)** (FREQ:50HZ + MOVOL:400V , FREQ:60HZ + MOVOL:380V) **(13/07/2017 - ...)**
	• 1629 0317 38	1	LOCK	
2150	0147 1963 08	4	SCREW	**(05/05/2017 - 12/07/2017)** (FREQ:50HZ + MOVOL:400V , FREQ:60HZ + MOVOL:380V) **(13/07/2017 - 27/08/2017)**
2160	1649 8001 73	1	SUPPORT BEAM	**(02/03/2017 - 12/07/2017)** (FREQ:50HZ + MOVOL:400V , FREQ:60HZ + MOVOL:380V) **(13/07/2017 - ...)**
2170	0147 1963 08	2	SCREW	**(02/03/2017 - 12/07/2017)** (FREQ:50HZ + MOVOL:400V , FREQ:60HZ + MOVOL:380V) **(13/07/2017 - ...)**
2180	1649 8001 64	1	COVER PLATE	**(02/03/2017 - 12/07/2017)** (FREQ:50HZ + MOVOL:400V , FREQ:60HZ + MOVOL:380V) **(13/07/2017 - ...)**
2185	1079 1472 05	1	HEXAGON BOLT	**(18/09/2018 - ...)**
2190	0147 1963 08	1	SCREW	**(02/03/2017 - 12/07/2017)** (FREQ:50HZ + MOVOL:400V , FREQ:60HZ + MOVOL:380V) **(13/07/2017 - ...)**
2200	0129 3270 46	3	BLIND RIVET	**(02/03/2017 - 12/07/2017)** (FREQ:50HZ + MOVOL:400V , FREQ:60HZ + MOVOL:380V) **(13/07/2017 - ...)**
2230	1625 4044 00	1	SEAL	**(02/03/2017 - 12/07/2017)** (FREQ:50HZ + MOVOL:400V , FREQ:60HZ + MOVOL:380V) **(13/07/2017 - ...)**
2240	0348 0102 12	2	CABLE TIE	**(06/07/2017 - 12/07/2017)** (FREQ:50HZ + MOVOL:400V , FREQ:60HZ + MOVOL:380V) **(13/07/2017 - ...)**
3010	1649 8001 96	1	BACK PANEL	**(28/08/2017 - ...)**
	• 1079 9932 40	1	DECAL PURGE	
	• 1079 9902 55	1	LABEL	
3020	1649 8001 95	1	PANEL	**(28/08/2017 - ...)**
4010	1649 8002 70	1	RIGHT BEAM	**(28/08/2017 - ...)**
	• 1625 3903 72	2	PLUG	**(17/10/2017 - ...)**

Remarks:

SELF-ADHESIVE INSULATION FOAM: THICKNESS:10MM / PART NUMBER:0395 6001 62 / SHEET DIMENSIONS: 2040MM X 1650MM
SELF-ADHESIVE INSULATION FOAM: THICKNESS:20MM / PART NUMBER:0395 6001 64 / SHEET DIMENSIONS: 2040MM X 1650MM
SELF-ADHESIVE INSULATION FOAM: THICKNESS:25MM / PART NUMBER:0395 6001 66 / SHEET DIMENSIONS: 2040MM X 1650MM
SELF-ADHESIVE INSULATION FOAM: THICKNESS:30MM / PART NUMBER:0395 6001 67 / SHEET DIMENSIONS: 2040MM X 1650MM
SELF-ADHESIVE INSULATION FOAM: THICKNESS:40MM / PART NUMBER:0395 6001 68 / SHEET DIMENSIONS: 2040MM X 1650MM
SELF-ADHESIVE INSULATION FOAM: THICKNESS:50MM / PART NUMBER:0395 6001 69 / SHEET DIMENSIONS: 2040MM X 1650MM

Legend:

FREQ:50HZ - Frequency:50 Hz
MOVOL:200V - Supply voltage:200 V
MOVOL:400V - Supply voltage:400 V
MOVOL:575V - Supply voltage:575 V
FREQ:60HZ - Frequency:60 Hz
MOVOL:230V - Supply voltage:230 V
MOVOL:460V - Supply voltage:460 V
IDRY:Y - Integrated dryer:Yes
MOVOL:380V - Supply voltage:380 V
MOVOL:500V - Supply voltage:500 V

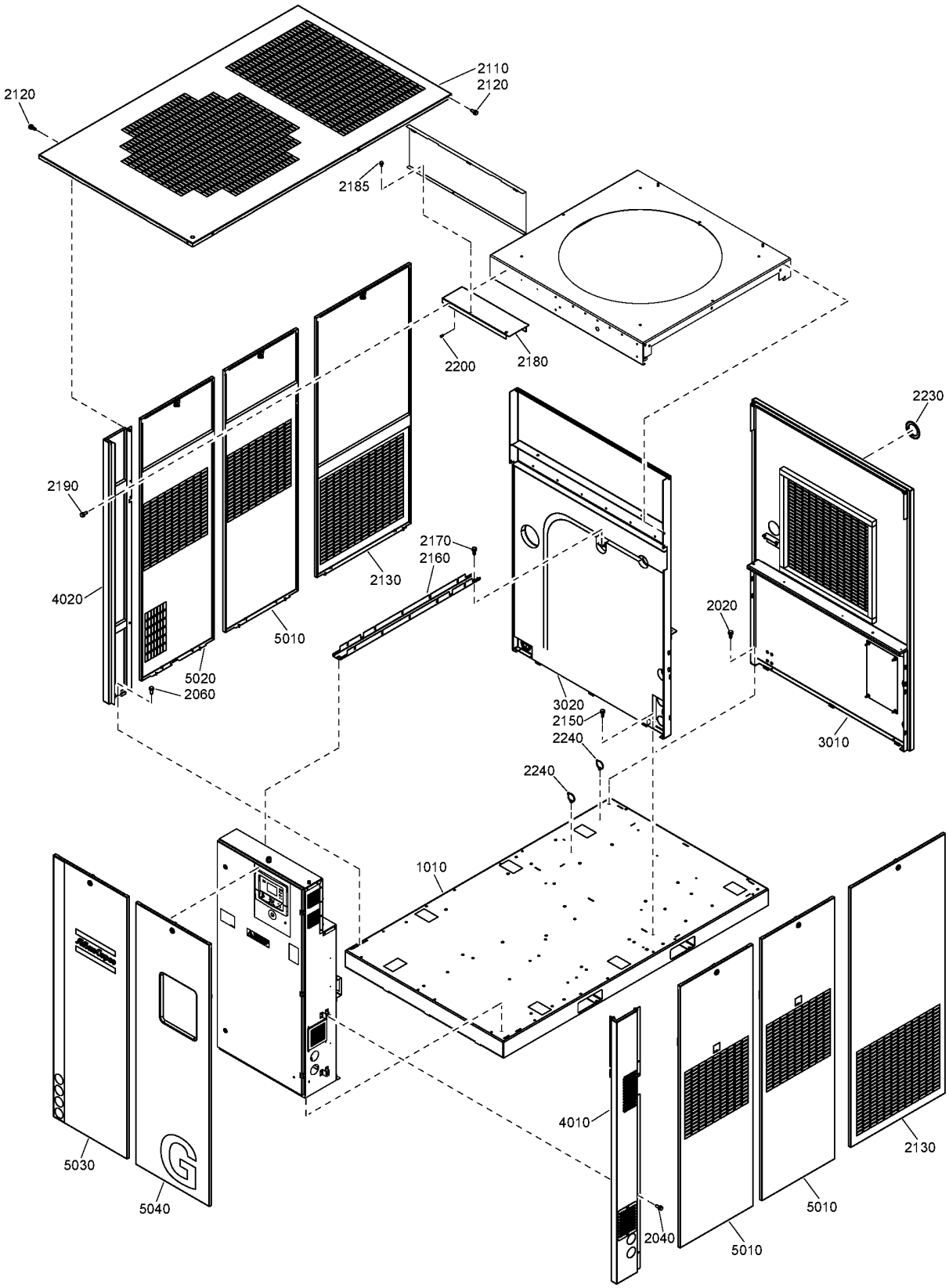
2110
2120
2120
2185
2200
2180
2230
2190
2170
2160
2130
4020
5010
2020
5020
2060
3020
2150
2240
3010
2240
1010
4010
2130
5030
5040
5010
2040
5010

Ref	Part Number	Qty	Name	Validity
4020	1649 8002 44	1	LEFT BEAM	(28/08/2017 - ...)
5010	1649 8001 55	3	SIDE PANEL	(28/08/2017 - ...)
	• 1629 0317 38	1	LOCK	
	• 1079 9902 55	1	LABEL	
5020	1649 8003 03	1	SIDE PANEL	(28/08/2017 - ...)
	• 1629 0317 38	1	LOCK	
5030	1649 8001 53	1	LEFT FRONT PANEL	(28/08/2017 - ...)
	• 1629 0317 38	1	LOCK	
	• 1622 4477 10	1	DECAL	
	• 0690 1132 01	1	HOUSE MARK	
	• 1625 2201 52	1	DECAL	
5040	1649 8001 51	1	RIGHT FRONT PANEL	(28/08/2017 - ...)

Remarks:

SELF-ADHESIVE INSULATION FOAM: THICKNESS:10MM / PART NUMBER:0395 6001 62 / SHEET DIMENSIONS: 2040MM X 1650MM
SELF-ADHESIVE INSULATION FOAM: THICKNESS:20MM / PART NUMBER:0395 6001 64 / SHEET DIMENSIONS: 2040MM X 1650MM
SELF-ADHESIVE INSULATION FOAM: THICKNESS:25MM / PART NUMBER:0395 6001 66 / SHEET DIMENSIONS: 2040MM X 1650MM
SELF-ADHESIVE INSULATION FOAM: THICKNESS:30MM / PART NUMBER:0395 6001 67 / SHEET DIMENSIONS: 2040MM X 1650MM
SELF-ADHESIVE INSULATION FOAM: THICKNESS:40MM / PART NUMBER:0395 6001 68 / SHEET DIMENSIONS: 2040MM X 1650MM
SELF-ADHESIVE INSULATION FOAM: THICKNESS:50MM / PART NUMBER:0395 6001 69 / SHEET DIMENSIONS: 2040MM X 1650MM

Legend:

FREQ:50HZ - Frequency:50 Hz
FREQ:60HZ - Frequency:60 Hz
IDRY:Y - Integrated dryer:Yes
MOVOL:200V - Supply voltage:200 V
MOVOL:230V - Supply voltage:230 V
MOVOL:380V - Supply voltage:380 V
MOVOL:400V - Supply voltage:400 V
MOVOL:460V - Supply voltage:460 V
MOVOL:500V - Supply voltage:500 V
MOVOL:575V - Supply voltage:575 V

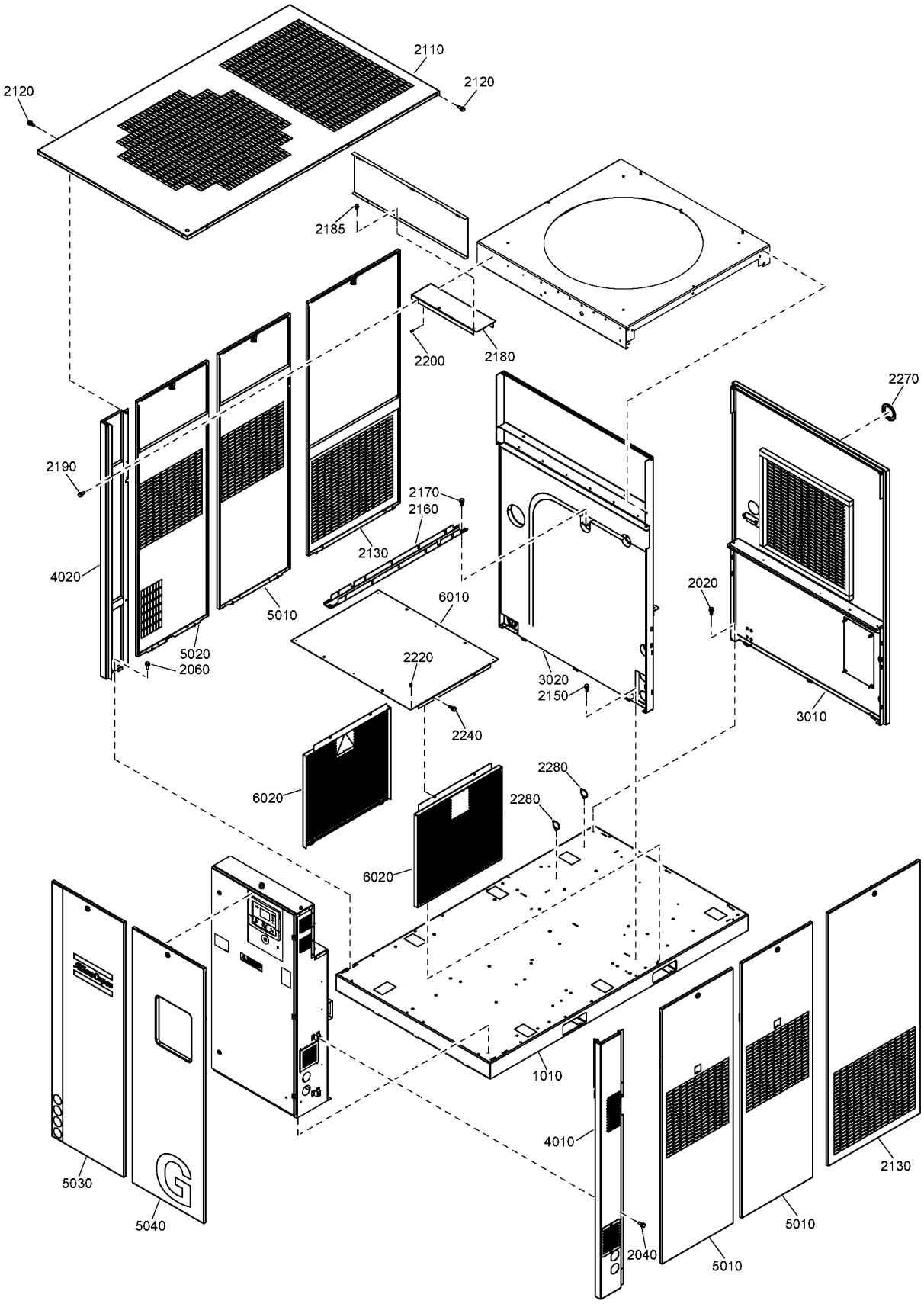
2110
2120
2120
2185
2200
2180
2270
2190
2170
2160
2130
4020
5010
6010
2020
5020
2060
2220
3020
2150
3010
2240
2280
6020
2280
6020
1010
4010
2130
5030
5040
5010
2040
5010

Ref	Part Number	Qty	Name	Validity
1010	1649 8001 37	1	FRAME ASSEMBLY	**(13/07/2017 - ...)**
	• 1079 9923 72	1	LABEL ELECTRICAL EARTHING	**(02/03/2017 - 12/07/2017)** ((MOVOL:380V , MOVOL:575V) + FREQ:60HZ , FREQ:50HZ + MOVOL:400V) + IDRY:Y **(13/07/2017 - ...)** ((MOVOL:380V , MOVOL:460V) + IDRY:Y , MOVOL:200V , MOVOL:230V , MOVOL:575V) + FREQ:60HZ , (IDRY:Y + MOVOL:400V , MOVOL:200V , MOVOL:500V) + FREQ:50HZ
	• 1622 0000 20	7	DECAL SYMBOLS	**(02/03/2017 - 12/07/2017)** ((MOVOL:380V , MOVOL:575V) + FREQ:60HZ , FREQ:50HZ + MOVOL:400V) + IDRY:Y **(13/07/2017 - ...)** ((MOVOL:380V , MOVOL:460V) + IDRY:Y , MOVOL:200V , MOVOL:230V , MOVOL:575V) + FREQ:60HZ , (IDRY:Y + MOVOL:400V , MOVOL:200V , MOVOL:500V) + FREQ:50HZ
2020	0147 1963 08	8	SCREW	**(28/08/2017 - ...)**
2040	0147 1963 08	4	SCREW	**(02/03/2017 - 12/07/2017)** FREQ:60HZ + IDRY:Y + MOVOL:575V **(13/07/2017 - 19/07/2017)** IDRY:Y **(20/07/2017 - ...)**
2060	0147 1963 08	5	SCREW	**(05/05/2017 - 12/07/2017)** FREQ:60HZ + IDRY:Y + MOVOL:575V **(13/07/2017 - 19/07/2017)** IDRY:Y **(20/07/2017 - ...)**
2110	1649 8001 62	1	ROOF	**(02/03/2017 - 12/07/2017)** FREQ:60HZ + IDRY:Y + MOVOL:575V **(13/07/2017 - 19/07/2017)** IDRY:Y **(20/07/2017 - ...)**
2120	0147 1963 08	7	SCREW	**(05/05/2017 - 12/07/2017)** FREQ:60HZ + IDRY:Y + MOVOL:575V **(13/07/2017 - 19/07/2017)** IDRY:Y **(20/07/2017 - ...)**
2130	1649 8001 57	2	SIDE PANEL	**(02/03/2017 - 12/07/2017)** FREQ:60HZ + IDRY:Y + MOVOL:575V **(13/07/2017 - 19/07/2017)** IDRY:Y **(20/07/2017 - ...)**
	• 1629 0317 38	1	LOCK	
2150	0147 1963 08	4	SCREW	**(05/05/2017 - 12/07/2017)** FREQ:60HZ + IDRY:Y + MOVOL:575V **(13/07/2017 - 19/07/2017)** IDRY:Y **(20/07/2017 - 27/08/2017)**
2160	1649 8001 73	1	SUPPORT BEAM	**(02/03/2017 - 12/07/2017)** FREQ:60HZ + IDRY:Y + MOVOL:575V **(13/07/2017 - 19/07/2017)** IDRY:Y **(20/07/2017 - ...)**
2170	0147 1963 08	2	SCREW	**(02/03/2017 - 12/07/2017)** FREQ:60HZ + IDRY:Y + MOVOL:575V **(13/07/2017 - 19/07/2017)** IDRY:Y **(20/07/2017 - ...)**
2180	1649 8001 64	1	COVER PLATE	**(02/03/2017 - 12/07/2017)** FREQ:60HZ + IDRY:Y + MOVOL:575V **(13/07/2017 - 19/07/2017)** IDRY:Y **(20/07/2017 - ...)**
2185	1079 1472 05	1	HEXAGON BOLT	**(18/09/2018 - ...)**
2190	0147 1963 08	1	SCREW	**(02/03/2017 - 12/07/2017)** FREQ:60HZ + IDRY:Y + MOVOL:575V **(13/07/2017 - 19/07/2017)** IDRY:Y **(20/07/2017 - ...)**
2200	0129 3270 46	3	BLIND RIVET	**(02/03/2017 - 12/07/2017)** FREQ:60HZ + IDRY:Y + MOVOL:575V **(13/07/2017 - 19/07/2017)** IDRY:Y **(20/07/2017 - ...)**
2220	0129 3270 46	6	BLIND RIVET	**(05/05/2017 - 12/07/2017)** FREQ:60HZ + IDRY:Y + MOVOL:575V **(13/07/2017 - 19/07/2017)** IDRY:Y **(20/07/2017 - ...)**
2240	0147 1963 08	4	SCREW	**(02/03/2017 - 12/07/2017)** FREQ:60HZ + IDRY:Y + MOVOL:575V **(13/07/2017 - 19/07/2017)** IDRY:Y **(20/07/2017 - ...)**
2270	1625 4044 00	1	SEAL	**(02/03/2017 - 12/07/2017)** FREQ:60HZ + IDRY:Y + MOVOL:575V **(13/07/2017 - 19/07/2017)** IDRY:Y **(20/07/2017 - ...)**
2280	0348 0102 12	2	CABLE TIE	**(06/07/2017 - 12/07/2017)** FREQ:60HZ + IDRY:Y + MOVOL:575V **(13/07/2017 - 19/07/2017)** IDRY:Y **(20/07/2017 - ...)**
3010	1649 8001 96	1	BACK PANEL	**(28/08/2017 - ...)**
	• 1079 9932 40	1	DECAL PURGE	

Remarks:

SELF-ADHESIVE INSULATION FOAM: THICKNESS:10MM / PART NUMBER:0395 6001 62 / SHEET DIMENSIONS: 2040MM X 1650MM
SELF-ADHESIVE INSULATION FOAM: THICKNESS:20MM / PART NUMBER:0395 6001 64 / SHEET DIMENSIONS: 2040MM X 1650MM
SELF-ADHESIVE INSULATION FOAM: THICKNESS:25MM / PART NUMBER:0395 6001 66 / SHEET DIMENSIONS: 2040MM X 1650MM
SELF-ADHESIVE INSULATION FOAM: THICKNESS:30MM / PART NUMBER:0395 6001 67 / SHEET DIMENSIONS: 2040MM X 1650MM
SELF-ADHESIVE INSULATION FOAM: THICKNESS:40MM / PART NUMBER:0395 6001 68 / SHEET DIMENSIONS: 2040MM X 1650MM
SELF-ADHESIVE INSULATION FOAM: THICKNESS:50MM / PART NUMBER:0395 6001 69 / SHEET DIMENSIONS: 2040MM X 1650MM

Legend:

FREQ:50HZ - Frequency:50 Hz
MOVOL:200V - Supply voltage:200 V
MOVOL:400V - Supply voltage:400 V
MOVOL:575V - Supply voltage:575 V
FREQ:60HZ - Frequency:60 Hz
MOVOL:230V - Supply voltage:230 V
MOVOL:460V - Supply voltage:460 V
IDRY:Y - Integrated dryer:Yes
MOVOL:380V - Supply voltage:380 V
MOVOL:500V - Supply voltage:500 V

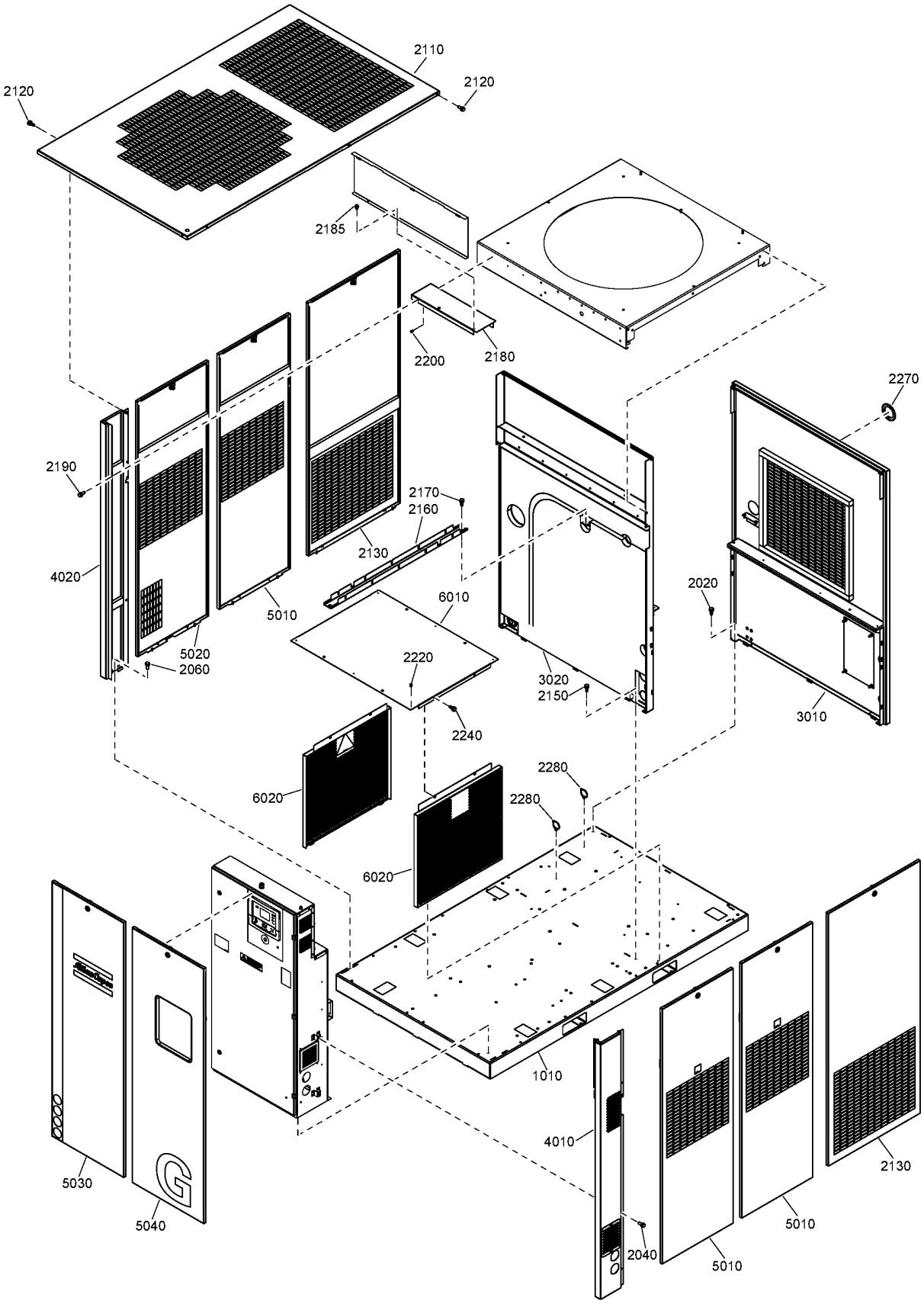
2110
2120
2120
2185
2200
2180
2270
2190
2170
2160
2130
4020
5010
6010
2020
5020
2060
2220
3020
2150
3010
2240
2280
6020
2280
6020
1010
4010
2130
5030
5040
5010
2040
5010

Ref	Part Number	Qty	Name	Validity
	• 1079 9902 55	1	LABEL	
3020	1649 8001 95	1	MID PANEL	(28/08/2017 - ...)
4010	1649 8002 70	1	RIGHT BEAM	(28/08/2017 - ...)
	• 1625 3903 72	2	PLUG	(17/10/2017 - ...)
4020	1649 8002 44	1	LEFT BEAM	(28/08/2017 - ...)
5010	1649 8001 55	3	SIDE PANEL	(28/08/2017 - ...)
	• 1629 0317 38	1	LOCK	
	• 1079 9902 55	1	LABEL	
5020	1649 8003 03	1	SIDE PANEL	(28/08/2017 - ...)
	• 1629 0317 38	1	LOCK	
5030	1649 8001 53	1	LEFT FRONT PANEL	(28/08/2017 - ...)
	• 1629 0317 38	1	LOCK	
	• 1622 4477 10	1	DECAL	
	• 0690 1132 01	1	HOUSE MARK	
	• 1625 2201 52	1	DECAL	
5040	1649 8001 51	1	RIGHT FRONT PANEL	(28/08/2017 - ...)
	• 1629 0317 38	1	LOCK	
6010	1649 8003 07	1	COVER PLATE	(28/08/2017 - ...)
6020	1649 8003 06	2	PROTECTION PLATE	(28/08/2017 - ...)

Remarks:

SELF-ADHESIVE INSULATION FOAM: THICKNESS:10MM / PART NUMBER:0395 6001 62 / SHEET DIMENSIONS: 2040MM X 1650MM
SELF-ADHESIVE INSULATION FOAM: THICKNESS:20MM / PART NUMBER:0395 6001 64 / SHEET DIMENSIONS: 2040MM X 1650MM
SELF-ADHESIVE INSULATION FOAM: THICKNESS:25MM / PART NUMBER:0395 6001 66 / SHEET DIMENSIONS: 2040MM X 1650MM
SELF-ADHESIVE INSULATION FOAM: THICKNESS:30MM / PART NUMBER:0395 6001 67 / SHEET DIMENSIONS: 2040MM X 1650MM
SELF-ADHESIVE INSULATION FOAM: THICKNESS:40MM / PART NUMBER:0395 6001 68 / SHEET DIMENSIONS: 2040MM X 1650MM
SELF-ADHESIVE INSULATION FOAM: THICKNESS:50MM / PART NUMBER:0395 6001 69 / SHEET DIMENSIONS: 2040MM X 1650MM

Legend:

FREQ:50HZ - Frequency:50 Hz
MOVOL:200V - Supply voltage:200 V
MOVOL:400V - Supply voltage:400 V
MOVOL:575V - Supply voltage:575 V

FREQ:60HZ - Frequency:60 Hz
MOVOL:230V - Supply voltage:230 V
MOVOL:460V - Supply voltage:460 V

IDRY:Y - Integrated dryer:Yes
MOVOL:380V - Supply voltage:380 V
MOVOL:500V - Supply voltage:500 V

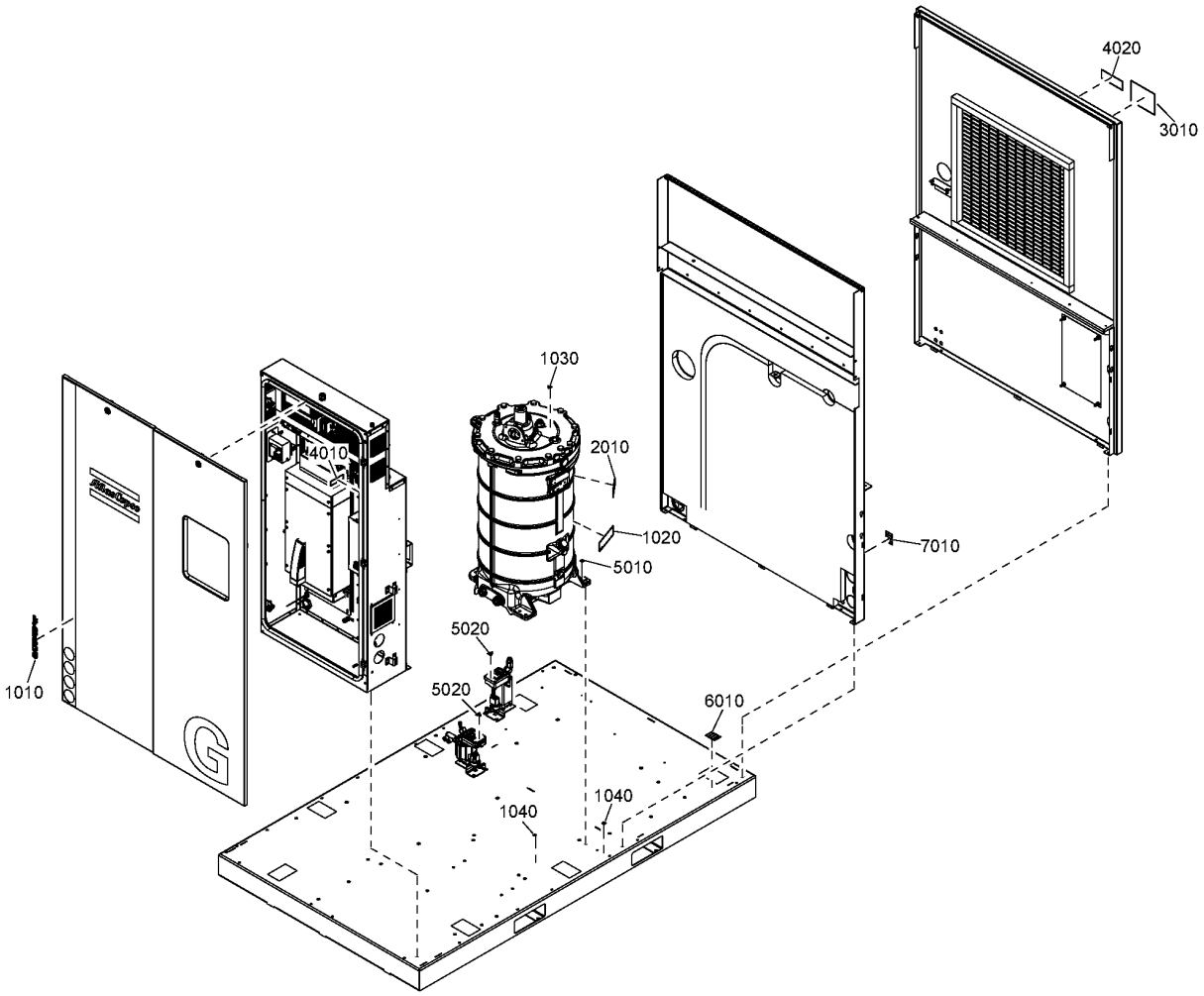
4020
3010
1030
2010
4010
1020
5010
7010
5020
5020
1010
6010
1040
1040

Ref	Part Number	Qty	Name	Validity
1010	1649 8004 09	1	DECAL	**(20/07/2017 - 20/08/2018)** (((((CAPPRM:AS1210 , CAPPRM:CE , CAPPRM:MOM) + MOVOL:400V , CAPPRM:CE + MOVOL:500V) + FREQ:50HZ , (MOVOL:380V , MOVOL:460V) + CAPPRM:ASME + FREQ:60HZ) + OILTYP:RIF , ((MOVOL:200V , MOVOL:400V) + FREQ:50HZ , (MOVOL:200V , MOVOL:460V) + FREQ:60HZ) + CAPPRM:MHLW + OILTYP:RXD) + CAPPRE:IEC , (MOVOL:230V , MOVOL:460V , MOVOL:575V) + CAPPRE:ULCUL + CAPPRM:ASME + FREQ:60HZ + OILTYP:RXD) + COOL:AIR + IDRY:N + MODEL:GA90VP_16 + PRCMP:API **(21/08/2018 - ...)** (((((CAPPRM:AS1210 , CAPPRM:CE , CAPPRM:MOM) + MOVOL:400V , CAPPRM:CE + COOL:AIR + MOVOL:500V) + FREQ:50HZ , (MOVOL:380V , MOVOL:460V) + CAPPRM:ASME + FREQ:60HZ) + OILTYP:RIF , ((COOL:AIR + MOVOL:200V , MOVOL:400V) + FREQ:50HZ , (COOL:AIR + MOVOL:200V , MOVOL:460V) + FREQ:60HZ) + CAPPRM:MHLW + OILTYP:RXD) + CAPPRE:IEC , ((MOVOL:230V , MOVOL:575V) + COOL:AIR , MOVOL:460V) + CAPPRE:ULCUL + CAPPRM:ASME + FREQ:60HZ + OILTYP:RXD) + IDRY:N + MODEL:GA90VP_16 + PRCMP:API
1010	1649 8004 11	1	DECAL	**(20/07/2017 - 25/10/2017)** (((((CAPPRM:AS1210 , CAPPRM:CE , CAPPRM:MOM) + MOVOL:400V , CAPPRM:CE + MOVOL:500V) + FREQ:50HZ , (MOVOL:380V , MOVOL:460V) + CAPPRM:ASME + FREQ:60HZ) + OILTYP:RIF , ((MOVOL:200V , MOVOL:400V) + FREQ:50HZ , (MOVOL:200V , MOVOL:460V) + FREQ:60HZ) + CAPPRM:MHLW + OILTYP:RXD) + CAPPRE:IEC , (MOVOL:230V , MOVOL:460V , MOVOL:575V) + CAPPRE:ULCUL + CAPPRM:ASME + FREQ:60HZ + OILTYP:RXD) + COOL:AIR + IDRY:N + MODEL:GA110VP_16 + PRCMP:API **(26/10/2017 - 20/08/2018)** (((((CAPPRM:AS1210 , CAPPRM:CE , CAPPRM:MOM) + MOVOL:400V , CAPPRM:CE + MOVOL:500V) + FREQ:50HZ , (MOVOL:380V , MOVOL:460V) + CAPPRM:ASME + FREQ:60HZ) + OILTYP:RIF , ((MOVOL:200V , MOVOL:400V) + FREQ:50HZ , (MOVOL:200V , MOVOL:460V) + FREQ:60HZ) + CAPPRM:MHLW + OILTYP:RXD) + CAPPRE:IEC , (MOVOL:230V , MOVOL:460V , MOVOL:575V) + CAPPRE:ULCUL + CAPPRM:ASME + FREQ:60HZ + OILTYP:RXD) + COOL:AIR + IDRY:N + MODEL:GA110VP_16 **(21/08/2018 - 30/12/2027)** (((((CAPPRM:AS1210 , CAPPRM:CE , CAPPRM:MOM) + MOVOL:400V , CAPPRM:CE + COOL:AIR + MOVOL:500V) + FREQ:50HZ , (MOVOL:380V , MOVOL:460V) + CAPPRM:ASME + FREQ:60HZ) + OILTYP:RIF , (COOL:AIR + MOVOL:200V , FREQ:50HZ + MOVOL:400V , FREQ:60HZ + MOVOL:460V) + CAPPRM:MHLW + OILTYP:RXD) + CAPPRE:IEC , ((MOVOL:230V , MOVOL:575V) + COOL:AIR , MOVOL:460V) + CAPPRE:ULCUL + CAPPRM:ASME + FREQ:60HZ + OILTYP:RXD) + IDRY:N + MODEL:GA110VP_16 **(31/12/2027 - ...)** (((((CAPPRM:AS1210 , CAPPRM:CE , CAPPRM:MOM) + MOVOL:400V , CAPPRM:CE + COOL:AIR + MOVOL:500V) + FREQ:50HZ , (MOVOL:380V , MOVOL:460V) + CAPPRM:ASME + FREQ:60HZ) + OILTYP:RIF , (FREQ:50HZ + MOVOL:400V , FREQ:60HZ + MOVOL:460V) + CAPPRM:MHLW + OILTYP:RXD) + CAPPRE:IEC , (COOL:AIR + MOVOL:575V , MOVOL:460V) + CAPPRE:ULCUL + CAPPRM:ASME + FREQ:60HZ + OILTYP:RXD) + IDRY:N + MODEL:GA110VP_16

Legend:

CAPPRE:IEC - Component approval electrical:IEC	CAPPRE:ULCUL - Component approval electrical:UL/cUL	CAPPRM:AS1210 - Component approval mechanical:AS1210
CAPPRM:ASME - Component approval mechanical:ASME	CAPPRM:CE - Component approval mechanical:CE	CAPPRM:MHLW - Component approval mechanical:MHLW
CAPPRM:MOM - Component approval mechanical:MOM	COOL:AIR - Cooling:Air cooled	COOL:WATER - Cooling:Water cooled
FREQ:50HZ - Frequency:50 Hz	FREQ:60HZ - Frequency:60 Hz	IDRY:N - Integrated dryer:No
IDRY:Y - Integrated dryer:Yes	MODEL:GA110VP_16 - Model:GA 110VSD+	MODEL:GA75VP_16 - Model:GA 75VSD+
MODEL:GA90VP_16 - Model:GA 90VSD+	MOVOL:200V - Supply voltage:200 V	MOVOL:230V - Supply voltage:230 V
MOVOL:380V - Supply voltage:380 V	MOVOL:400V - Supply voltage:400 V	MOVOL:460V - Supply voltage:460 V
MOVOL:500V - Supply voltage:500 V	MOVOL:575V - Supply voltage:575 V	OILTYP:RIF - Oil type:Roto inject fluid oil
OILTYP:RXD - Oil type:Roto-Xtend Duty Fluid	PRCMP:APF - Product company:APF	PRCMP:API - Product company:API

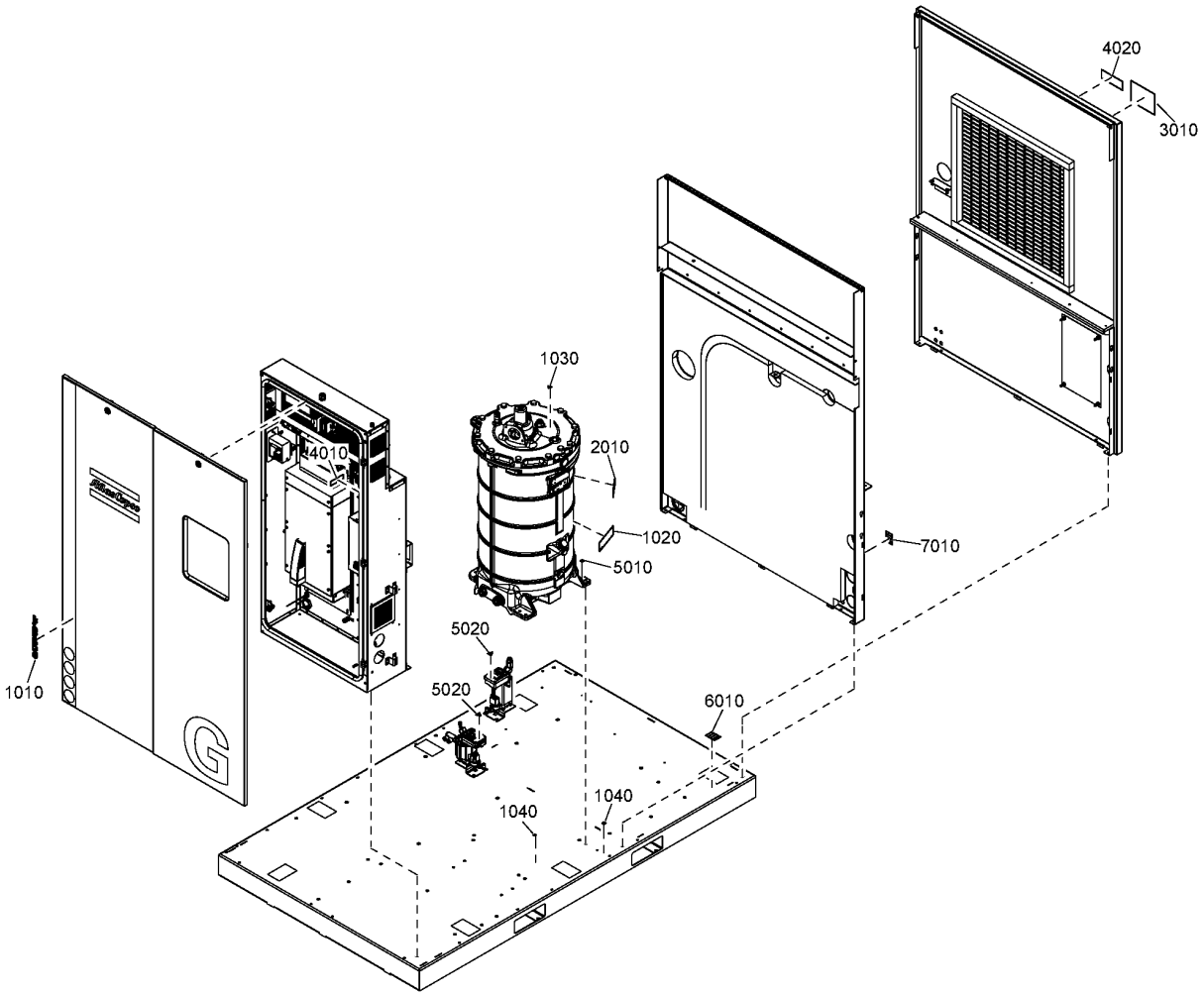
4020
3010
1030
2010
4010
1020
5010
7010
5020
5020
1010
6010
1040
1040

Ref	Part Number	Qty	Name	Validity
1010	1649 8004 07	1	DECAL	**(20/07/2017 - 20/08/2018)** (((((CAPPRM:AS1210 , CAPPRM:CE , CAPPRM:MOM) + MOVOL:400V , CAPPRM:CE + MOVOL:500V) + FREQ:50HZ , (MOVOL:380V , MOVOL:460V) + CAPPRM:ASME + FREQ:60HZ) + OILTYP:RIF , ((MOVOL:200V , MOVOL:400V) + FREQ:50HZ , (MOVOL:200V , MOVOL:460V) + FREQ:60HZ) + CAPPRM:MHLW + OILTYP:RXD) + CAPPRE:IEC , (MOVOL:230V , MOVOL:460V , MOVOL:575V) + CAPPRE:ULCUL + CAPPRM:ASME + FREQ:60HZ + OILTYP:RXD) + COOL:AIR + IDRY:N + MODEL:GA75VP_16 + PRCMP:API **(21/08/2018 - ...)** (((((CAPPRM:AS1210 , CAPPRM:CE , CAPPRM:MOM) + MOVOL:400V , CAPPRM:CE + COOL:AIR + MOVOL:500V) + FREQ:50HZ , (MOVOL:380V , MOVOL:460V) + CAPPRM:ASME + FREQ:60HZ) + OILTYP:RIF , ((COOL:AIR + MOVOL:200V , MOVOL:400V) + FREQ:50HZ , (COOL:AIR + MOVOL:200V , MOVOL:460V) + FREQ:60HZ) + CAPPRM:MHLW + OILTYP:RXD) + CAPPRE:IEC , ((MOVOL:230V , MOVOL:575V) + COOL:AIR , MOVOL:460V) + CAPPRE:ULCUL + CAPPRM:ASME + FREQ:60HZ + OILTYP:RXD) + IDRY:N + MODEL:GA75VP_16 + PRCMP:API
1010	1649 8004 08	1	DECAL	**(20/07/2017 - 20/08/2018)** (((((CAPPRM:AS1210 , CAPPRM:CE , CAPPRM:MOM) + MOVOL:400V , CAPPRM:CE + MOVOL:500V) + FREQ:50HZ , (MOVOL:380V , MOVOL:460V) + CAPPRM:ASME + FREQ:60HZ) + OILTYP:RIF , ((MOVOL:200V , MOVOL:400V) + FREQ:50HZ , (MOVOL:200V , MOVOL:460V) + FREQ:60HZ) + CAPPRM:MHLW + OILTYP:RXD) + CAPPRE:IEC , (MOVOL:230V , MOVOL:460V , MOVOL:575V) + CAPPRE:ULCUL + CAPPRM:ASME + FREQ:60HZ + OILTYP:RXD) + COOL:AIR + IDRY:Y + MODEL:GA75VP_16 + PRCMP:API **(21/08/2018 - ...)** (((((CAPPRM:AS1210 , CAPPRM:CE , CAPPRM:MOM) + MOVOL:400V , CAPPRM:CE + COOL:AIR + MOVOL:500V) + FREQ:50HZ , (MOVOL:380V , MOVOL:460V) + CAPPRM:ASME + FREQ:60HZ) + OILTYP:RIF , ((COOL:AIR + MOVOL:200V , MOVOL:400V) + FREQ:50HZ , (COOL:AIR + MOVOL:200V , MOVOL:460V) + FREQ:60HZ) + CAPPRM:MHLW + OILTYP:RXD) + CAPPRE:IEC , ((MOVOL:230V , MOVOL:575V) + COOL:AIR , MOVOL:460V) + CAPPRE:ULCUL + CAPPRM:ASME + FREQ:60HZ + OILTYP:RXD) + IDRY:Y + MODEL:GA75VP_16 + PRCMP:API
1010	1649 8004 10	1	DECAL	**(20/07/2017 - 20/08/2018)** (((((CAPPRM:AS1210 , CAPPRM:CE , CAPPRM:MOM) + MOVOL:400V , CAPPRM:CE + MOVOL:500V) + FREQ:50HZ , (MOVOL:380V , MOVOL:460V) + CAPPRM:ASME + FREQ:60HZ) + OILTYP:RIF , ((MOVOL:200V , MOVOL:400V) + FREQ:50HZ , (MOVOL:200V , MOVOL:460V) + FREQ:60HZ) + CAPPRM:MHLW + OILTYP:RXD) + CAPPRE:IEC , (MOVOL:230V , MOVOL:460V , MOVOL:575V) + CAPPRE:ULCUL + CAPPRM:ASME + FREQ:60HZ + OILTYP:RXD) + COOL:AIR + IDRY:Y + MODEL:GA90VP_16 + PRCMP:API **(21/08/2018 - ...)** (((((CAPPRM:AS1210 , CAPPRM:CE , CAPPRM:MOM) + MOVOL:400V , CAPPRM:CE + COOL:AIR + MOVOL:500V) + FREQ:50HZ , (MOVOL:380V , MOVOL:460V) + CAPPRM:ASME + FREQ:60HZ) + OILTYP:RIF , ((COOL:AIR + MOVOL:200V , MOVOL:400V) + FREQ:50HZ , (COOL:AIR + MOVOL:200V , MOVOL:460V) + FREQ:60HZ) + CAPPRM:MHLW + OILTYP:RXD) + CAPPRE:IEC , ((MOVOL:230V , MOVOL:575V) + COOL:AIR , MOVOL:460V) + CAPPRE:ULCUL + CAPPRM:ASME + FREQ:60HZ + OILTYP:RXD) + IDRY:Y + MODEL:GA90VP_16 + PRCMP:API

Legend:

CAPPRE:IEC - Component approval electrical:IEC
CAPPRE:ULCUL - Component approval electrical:UL/cUL
CAPPRM:AS1210 - Component approval mechanical:AS1210
CAPPRM:ASME - Component approval mechanical:ASME
CAPPRM:CE - Component approval mechanical:CE
CAPPRM:MHLW - Component approval mechanical:MHLW
CAPPRM:MOM - Component approval mechanical:MOM
COOL:AIR - Cooling:Air cooled
COOL:WATER - Cooling:Water cooled
FREQ:50HZ - Frequency:50 Hz
FREQ:60HZ - Frequency:60 Hz
IDRY:N - Integrated dryer:No
IDRY:Y - Integrated dryer:Yes
MODEL:GA110VP_16 - Model:GA 110VSD+
MODEL:GA75VP_16 - Model:GA 75VSD+
MODEL:GA90VP_16 - Model:GA 90VSD+
MOVOL:200V - Supply voltage:200 V
MOVOL:230V - Supply voltage:230 V
MOVOL:380V - Supply voltage:380 V
MOVOL:400V - Supply voltage:400 V
MOVOL:460V - Supply voltage:460 V
MOVOL:500V - Supply voltage:500 V
MOVOL:575V - Supply voltage:575 V
OILTYP:RIF - Oil type:Roto inject fluid oil
OILTYP:RXD - Oil type:Roto-Xtend Duty Fluid
PRCMP:APF - Product company:APF
PRCMP:API - Product company:API

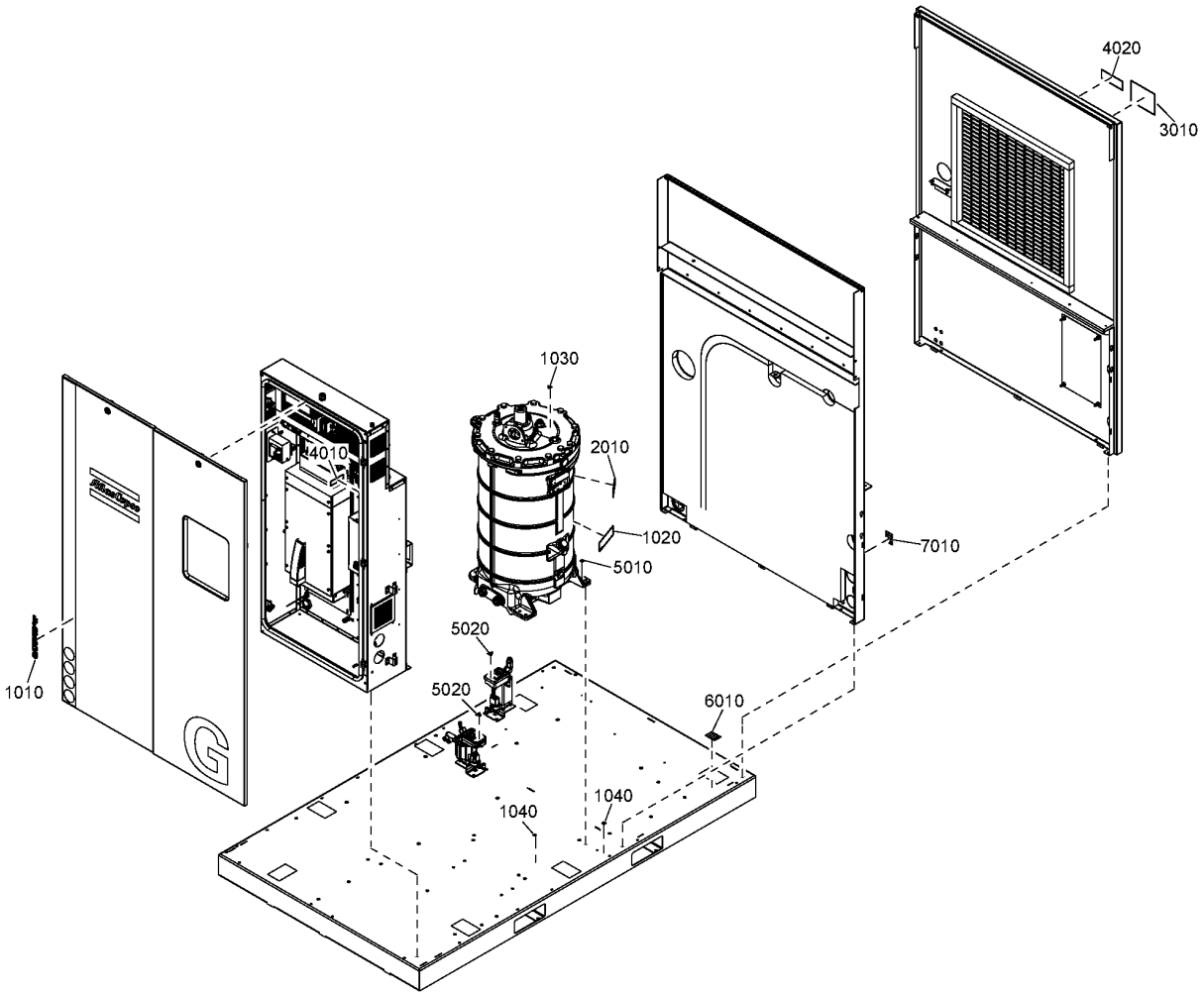
4020
3010
1030
2010
4010
1020
5010
7010
5020
5020
1010
6010
1040
1040

Ref	Part Number	Qty	Name	Validity
1010	1649 8004 12	1	DECAL	**(20/07/2017 - 25/10/2017)** (((((CAPPRM:AS1210 , CAPPRM:CE , CAPPRM:MOM) + MOVOL:400V , CAPPRM:CE + MOVOL:500V) + FREQ:50HZ , (MOVOL:380V , MOVOL:460V) + CAPPRM:ASME + FREQ:60HZ) + OILTYP:RIF , ((MOVOL:200V , MOVOL:400V) + FREQ:50HZ , (MOVOL:200V , MOVOL:460V) + FREQ:60HZ) + CAPPRM:MHLW + OILTYP:RXD) + CAPPRE:IEC , (MOVOL:230V , MOVOL:460V , MOVOL:575V) + CAPPRE:ULCUL + CAPPRM:ASME + FREQ:60HZ + OILTYP:RXD) + COOL:AIR + IDRY:Y + MODEL:GA110VP_16 + PRCMP:API **(26/10/2017 - 20/08/2018)** (((((CAPPRM:AS1210 , CAPPRM:CE , CAPPRM:MOM) + MOVOL:400V , CAPPRM:CE + MOVOL:500V) + FREQ:50HZ , (MOVOL:380V , MOVOL:460V) + CAPPRM:ASME + FREQ:60HZ) + OILTYP:RIF , ((MOVOL:200V , MOVOL:400V) + FREQ:50HZ , (MOVOL:200V , MOVOL:460V) + FREQ:60HZ) + CAPPRM:MHLW + OILTYP:RXD) + CAPPRE:IEC , (MOVOL:230V , MOVOL:460V , MOVOL:575V) + CAPPRE:ULCUL + CAPPRM:ASME + FREQ:60HZ + OILTYP:RXD) + COOL:AIR + IDRY:Y + MODEL:GA110VP_16 **(21/08/2018 - 30/12/2027)** (((((CAPPRM:AS1210 , CAPPRM:CE , CAPPRM:MOM) + MOVOL:400V , CAPPRM:CE + COOL:AIR + MOVOL:500V) + FREQ:50HZ , (MOVOL:380V , MOVOL:460V) + CAPPRM:ASME + FREQ:60HZ) + OILTYP:RIF , (COOL:AIR + MOVOL:200V , FREQ:50HZ + MOVOL:400V , FREQ:60HZ + MOVOL:460V) + CAPPRM:MHLW + OILTYP:RXD) + CAPPRE:IEC , ((MOVOL:230V , MOVOL:575V) + COOL:AIR , MOVOL:460V) + CAPPRE:ULCUL + CAPPRM:ASME + FREQ:60HZ + OILTYP:RXD) + IDRY:Y + MODEL:GA110VP_16 **(31/12/2027 - ...)** (((((CAPPRM:AS1210 , CAPPRM:CE , CAPPRM:MOM) + MOVOL:400V , CAPPRM:CE + COOL:AIR + MOVOL:500V) + FREQ:50HZ , (MOVOL:380V , MOVOL:460V) + CAPPRM:ASME + FREQ:60HZ) + OILTYP:RIF , (FREQ:50HZ + MOVOL:400V , FREQ:60HZ + MOVOL:460V) + CAPPRM:MHLW + OILTYP:RXD) + CAPPRE:IEC , (COOL:AIR + MOVOL:575V , MOVOL:460V) + CAPPRE:ULCUL + CAPPRM:ASME + FREQ:60HZ + OILTYP:RXD) + IDRY:Y + MODEL:GA110VP_16

Legend:

CAPPRE:IEC - Component approval electrical:IEC	CAPPRE:ULCUL - Component approval electrical:UL/cUL	CAPPRM:AS1210 - Component approval mechanical:AS1210
CAPPRM:ASME - Component approval mechanical:ASME	CAPPRM:CE - Component approval mechanical:CE	CAPPRM:MHLW - Component approval mechanical:MHLW
CAPPRM:MOM - Component approval mechanical:MOM	COOL:AIR - Cooling:Air cooled	COOL:WATER - Cooling:Water cooled
FREQ:50HZ - Frequency:50 Hz	FREQ:60HZ - Frequency:60 Hz	IDRY:N - Integrated dryer:No
IDRY:Y - Integrated dryer:Yes	MODEL:GA110VP_16 - Model:GA 110VSD+	MODEL:GA75VP_16 - Model:GA 75VSD+
MODEL:GA90VP_16 - Model:GA 90VSD+	MOVOL:200V - Supply voltage:200 V	MOVOL:230V - Supply voltage:230 V
MOVOL:380V - Supply voltage:380 V	MOVOL:400V - Supply voltage:400 V	MOVOL:460V - Supply voltage:460 V
MOVOL:500V - Supply voltage:500 V	MOVOL:575V - Supply voltage:575 V	OILTYP:RIF - Oil type:Roto inject fluid oil
OILTYP:RXD - Oil type:Roto-Xtend Duty Fluid	PRCMP:APF - Product company:APF	PRCMP:API - Product company:API

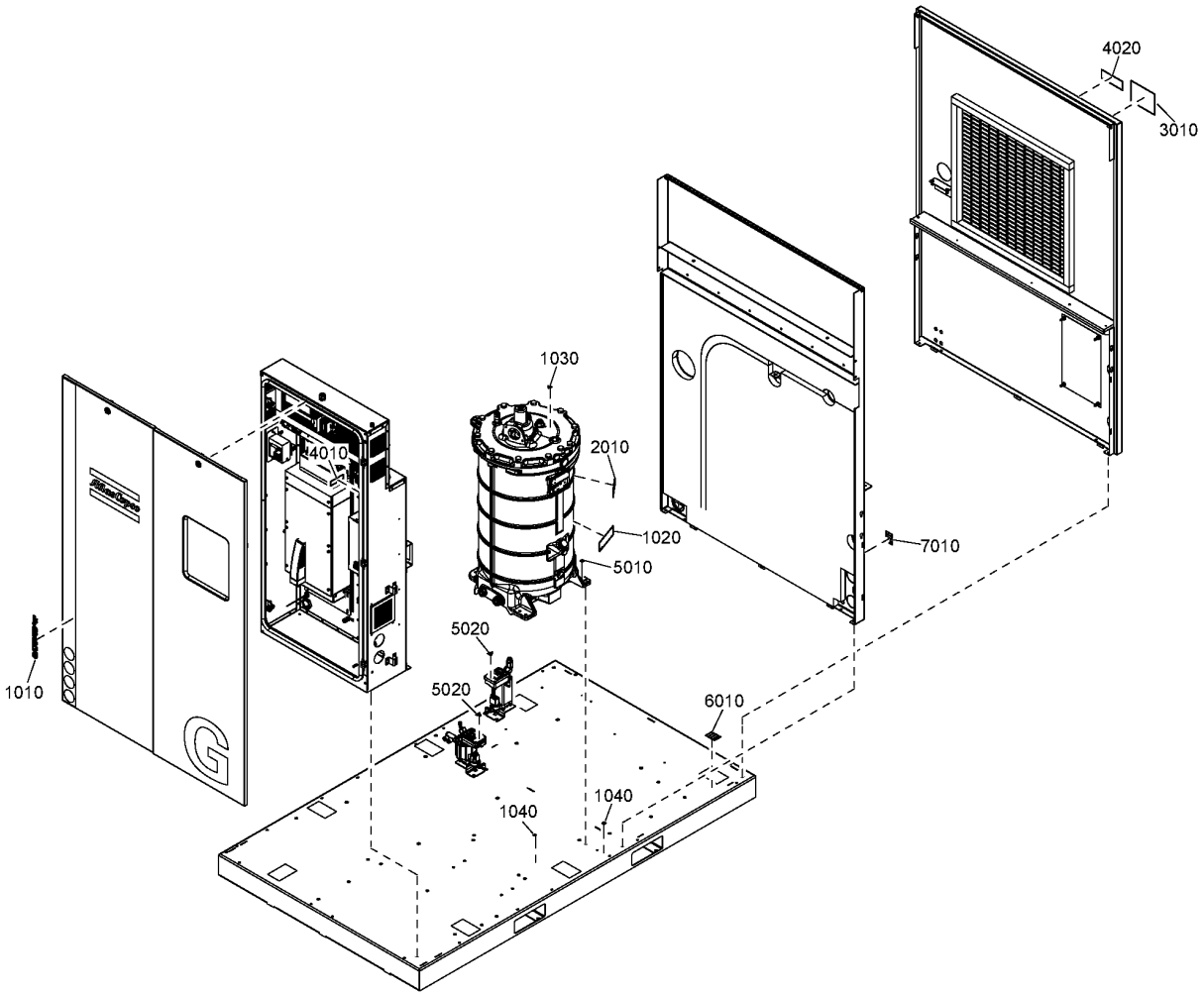
4020
3010
1030
2010
4010
1020
5010
7010
5020
5020
1010
6010
1040
1040

Ref	Part Number	Qty	Name	Validity
1020	1079 9904 99	1	WARNING LABEL	**(02/03/2017 - 12/07/2017)** (((IDRY:N + MODEL:GA90VP_16 , MODEL:GA110VP_16 , MODEL:GA75VP_16) + CAPPRM:CE + FREQ:50HZ + MOVOL:400V , CAPPRM:ASME + FREQ:60HZ + IDRY:Y + MODEL:GA110VP_16 + MOVOL:380V) + CAPPRE:IEC + OILTYP:RIF , (IDRY:N + MODEL:GA75VP_16 + MOVOL:460V , IDRY:Y + MODEL:GA110VP_16 + MOVOL:575V) + CAPPRE:ULCUL + CAPPRM:ASME + FREQ:60HZ + OILTYP:RXD) + COOL:AIR + PRCMP:API **(13/07/2017 - 25/10/2017)** (((((CAPPRM:AS1210 , CAPPRM:CE , CAPPRM:MOM) + MOVOL:400V , CAPPRM:CE + MOVOL:500V) + FREQ:50HZ , (MOVOL:380V , MOVOL:460V) + CAPPRM:ASME + FREQ:60HZ) + OILTYP:RIF , ((MOVOL:200V , MOVOL:400V) + FREQ:50HZ , (MOVOL:200V , MOVOL:460V) + FREQ:60HZ) + CAPPRM:MHLW + OILTYP:RXD) + CAPPRE:IEC , (MOVOL:230V , MOVOL:460V , MOVOL:575V) + CAPPRE:ULCUL + CAPPRM:ASME + FREQ:60HZ + OILTYP:RXD) + COOL:AIR + PRCMP:API **(26/10/2017 - 20/08/2018)** (((((CAPPRM:AS1210 , CAPPRM:CE , CAPPRM:MOM) + MOVOL:400V , CAPPRM:CE + MOVOL:500V) + FREQ:50HZ , (MOVOL:380V , MOVOL:460V) + CAPPRM:ASME + FREQ:60HZ) + OILTYP:RIF , ((MOVOL:200V , MOVOL:400V) + FREQ:50HZ , (MOVOL:200V , MOVOL:460V) + FREQ:60HZ) + CAPPRM:MHLW + OILTYP:RXD) + CAPPRE:IEC , (MOVOL:230V , MOVOL:460V , MOVOL:575V) + CAPPRE:ULCUL + CAPPRM:ASME + FREQ:60HZ + OILTYP:RXD) + (MODEL:GA110VP_16 + PRCMP:APF , PRCMP:API) + COOL:AIR **(21/08/2018 - 30/12/2027)** (((((CAPPRM:AS1210 , CAPPRM:CE , CAPPRM:MOM) + MOVOL:400V , CAPPRM:CE + COOL:AIR + MOVOL:500V) + FREQ:50HZ , (MOVOL:380V , MOVOL:460V) + CAPPRM:ASME + FREQ:60HZ) + OILTYP:RIF , (COOL:AIR + MOVOL:200V , FREQ:50HZ + MOVOL:400V , FREQ:60HZ + MOVOL:460V) + CAPPRM:MHLW + OILTYP:RXD) + CAPPRE:IEC , ((MOVOL:230V , MOVOL:575V) + COOL:AIR , MOVOL:460V) + CAPPRE:ULCUL + CAPPRM:ASME + FREQ:60HZ + OILTYP:RXD) + (MODEL:GA110VP_16 + PRCMP:APF , PRCMP:API) **(31/12/2027 - ...)** (((((CAPPRM:AS1210 , CAPPRM:CE , CAPPRM:MOM) + MOVOL:400V , CAPPRM:CE + COOL:AIR + MOVOL:500V) + FREQ:50HZ , (MOVOL:380V , MOVOL:460V) + CAPPRM:ASME + FREQ:60HZ) + OILTYP:RIF , (FREQ:50HZ + MOVOL:400V , FREQ:60HZ + MOVOL:460V) + CAPPRM:MHLW + OILTYP:RXD) + CAPPRE:IEC , (COOL:AIR + MOVOL:575V , MOVOL:460V) + CAPPRE:ULCUL + CAPPRM:ASME + FREQ:60HZ + OILTYP:RXD) + (MODEL:GA110VP_16 + PRCMP:APF , PRCMP:API) , (CAPPRE:IEC + CAPPRM:MHLW + MOVOL:200V , CAPPRE:ULCUL + CAPPRM:ASME + FREQ:60HZ + MOVOL:230V) + (MODEL:GA75VP_16 , MODEL:GA90VP_16) + COOL:AIR + OILTYP:RXD + PRCMP:API

Legend:

CAPPRE:IEC - Component approval electrical:IEC	CAPPRE:ULCUL - Component approval electrical:UL/cUL	CAPPRM:AS1210 - Component approval mechanical:AS1210
CAPPRM:ASME - Component approval mechanical:ASME	CAPPRM:CE - Component approval mechanical:CE	CAPPRM:MHLW - Component approval mechanical:MHLW
CAPPRM:MOM - Component approval mechanical:MOM	COOL:AIR - Cooling:Air cooled	COOL:WATER - Cooling:Water cooled
FREQ:50HZ - Frequency:50 Hz	FREQ:60HZ - Frequency:60 Hz	IDRY:N - Integrated dryer:No
IDRY:Y - Integrated dryer:Yes	MODEL:GA110VP_16 - Model:GA 110VSD+	MODEL:GA75VP_16 - Model:GA 75VSD+
MODEL:GA90VP_16 - Model:GA 90VSD+	MOVOL:200V - Supply voltage:200 V	MOVOL:230V - Supply voltage:230 V
MOVOL:380V - Supply voltage:380 V	MOVOL:400V - Supply voltage:400 V	MOVOL:460V - Supply voltage:460 V
MOVOL:500V - Supply voltage:500 V	MOVOL:575V - Supply voltage:575 V	OILTYP:RIF - Oil type:Roto inject fluid oil
OILTYP:RXD - Oil type:Roto-Xtend Duty Fluid	PRCMP:APF - Product company:APF	PRCMP:API - Product company:API

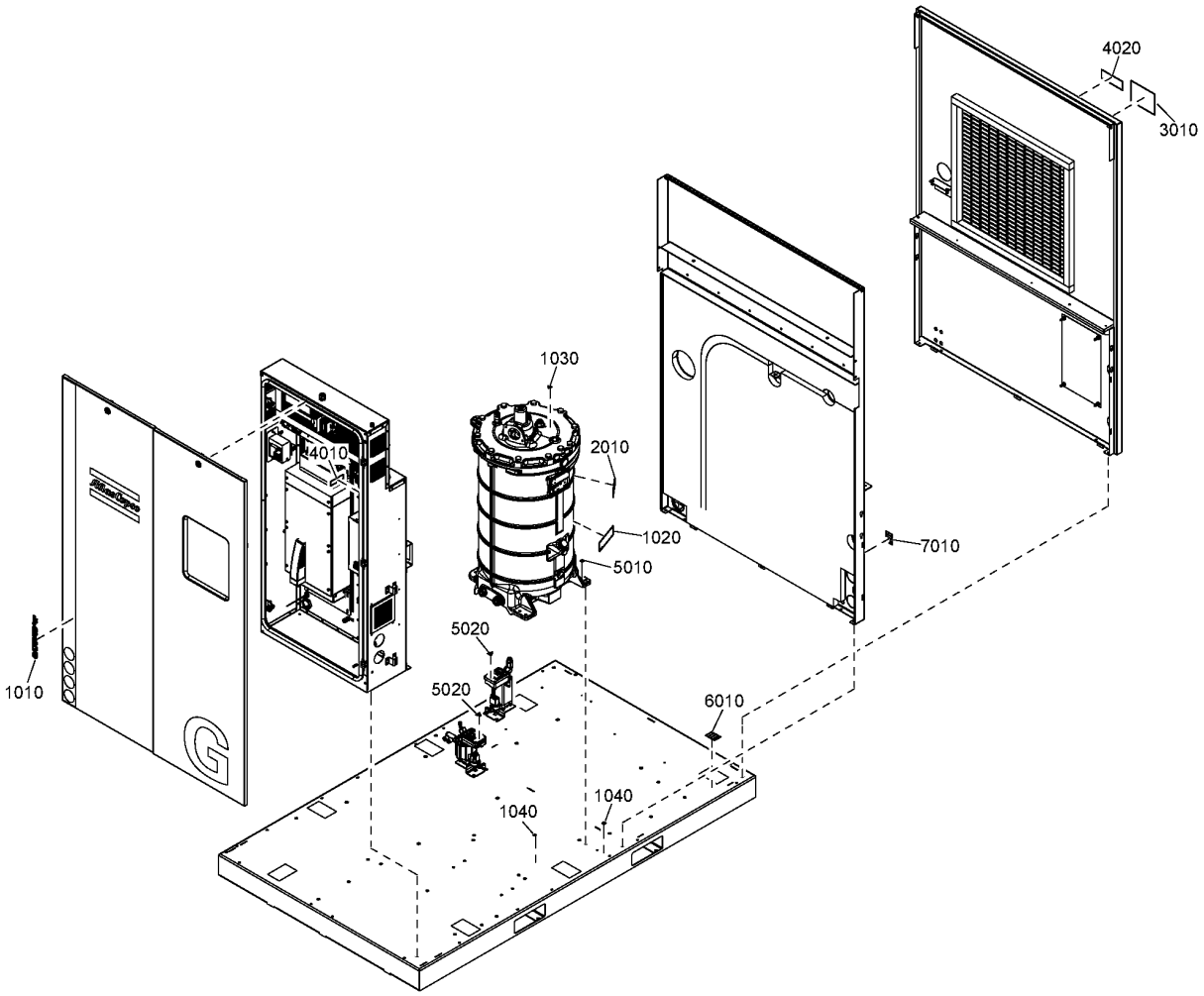
4020
3010
1030
2010
4010
1020
5010
7010
5020
5020
1010
6010
1040
1040

Ref	Part Number	Qty	Name	Validity
1030	1088 1001 01	1	WARNING MARK	**(02/03/2017 - 12/07/2017)** (((IDRY:N + MODEL:GA90VP_16 , MODEL:GA110VP_16 , MODEL:GA75VP_16) + CAPPRM:CE + FREQ:50HZ + MOVOL:400V , CAPPRM:ASME + FREQ:60HZ + IDRY:Y + MODEL:GA110VP_16 + MOVOL:380V) + CAPPRE:IEC + OILTYP:RIF , (IDRY:N + MODEL:GA75VP_16 + MOVOL:460V , IDRY:Y + MODEL:GA110VP_16 + MOVOL:575V) + CAPPRE:ULCUL + CAPPRM:ASME + FREQ:60HZ + OILTYP:RXD) + COOL:AIR + PRCMP:API **(13/07/2017 - 25/10/2017)** (((((CAPPRM:AS1210 , CAPPRM:CE , CAPPRM:MOM) + MOVOL:400V , CAPPRM:CE + MOVOL:500V) + FREQ:50HZ , (MOVOL:380V , MOVOL:460V) + CAPPRM:ASME + FREQ:60HZ) + OILTYP:RIF , ((MOVOL:200V , MOVOL:400V) + FREQ:50HZ , (MOVOL:200V , MOVOL:460V) + FREQ:60HZ) + CAPPRM:MHLW + OILTYP:RXD) + CAPPRE:IEC , (MOVOL:230V , MOVOL:460V , MOVOL:575V) + CAPPRE:ULCUL + CAPPRM:ASME + FREQ:60HZ + OILTYP:RXD) + COOL:AIR + PRCMP:API **(26/10/2017 - 20/08/2018)** (((((CAPPRM:AS1210 , CAPPRM:CE , CAPPRM:MOM) + MOVOL:400V , CAPPRM:CE + MOVOL:500V) + FREQ:50HZ , (MOVOL:380V , MOVOL:460V) + CAPPRM:ASME + FREQ:60HZ) + OILTYP:RIF , ((MOVOL:200V , MOVOL:400V) + FREQ:50HZ , (MOVOL:200V , MOVOL:460V) + FREQ:60HZ) + CAPPRM:MHLW + OILTYP:RXD) + CAPPRE:IEC , (MOVOL:230V , MOVOL:460V , MOVOL:575V) + CAPPRE:ULCUL + CAPPRM:ASME + FREQ:60HZ + OILTYP:RXD) + (MODEL:GA110VP_16 + PRCMP:APF , PRCMP:API) + COOL:AIR **(21/08/2018 - 30/12/2027)** (((((CAPPRM:AS1210 , CAPPRM:CE , CAPPRM:MOM) + MOVOL:400V , CAPPRM:CE + COOL:AIR + MOVOL:500V) + FREQ:50HZ , (MOVOL:380V , MOVOL:460V) + CAPPRM:ASME + FREQ:60HZ) + OILTYP:RIF , (COOL:AIR + MOVOL:200V , FREQ:50HZ + MOVOL:400V , FREQ:60HZ + MOVOL:460V) + CAPPRM:MHLW + OILTYP:RXD) + CAPPRE:IEC , ((MOVOL:230V , MOVOL:575V) + COOL:AIR , MOVOL:460V) + CAPPRE:ULCUL + CAPPRM:ASME + FREQ:60HZ + OILTYP:RXD) + (MODEL:GA110VP_16 + PRCMP:APF , PRCMP:API) **(31/12/2027 - ...)** (((((CAPPRM:AS1210 , CAPPRM:CE , CAPPRM:MOM) + MOVOL:400V , CAPPRM:CE + COOL:AIR + MOVOL:500V) + FREQ:50HZ , (MOVOL:380V , MOVOL:460V) + CAPPRM:ASME + FREQ:60HZ) + OILTYP:RIF , (FREQ:50HZ + MOVOL:400V , FREQ:60HZ + MOVOL:460V) + CAPPRM:MHLW + OILTYP:RXD) + CAPPRE:IEC , (COOL:AIR + MOVOL:575V , MOVOL:460V) + CAPPRE:ULCUL + CAPPRM:ASME + FREQ:60HZ + OILTYP:RXD) + (MODEL:GA110VP_16 + PRCMP:APF , PRCMP:API) , (CAPPRE:IEC + CAPPRM:MHLW + MOVOL:200V , CAPPRE:ULCUL + CAPPRM:ASME + FREQ:60HZ + MOVOL:230V) + (MODEL:GA75VP_16 , MODEL:GA90VP_16) + COOL:AIR + OILTYP:RXD + PRCMP:API

Legend:

CAPPRE:IEC - Component approval electrical:IEC	CAPPRE:ULCUL - Component approval electrical:UL/cUL	CAPPRM:AS1210 - Component approval mechanical:AS1210
CAPPRM:ASME - Component approval mechanical:ASME	CAPPRM:CE - Component approval mechanical:CE	CAPPRM:MHLW - Component approval mechanical:MHLW
CAPPRM:MOM - Component approval mechanical:MOM	COOL:AIR - Cooling:Air cooled	COOL:WATER - Cooling:Water cooled
FREQ:50HZ - Frequency:50 Hz	FREQ:60HZ - Frequency:60 Hz	IDRY:N - Integrated dryer:No
IDRY:Y - Integrated dryer:Yes	MODEL:GA110VP_16 - Model:GA 110VSD+	MODEL:GA75VP_16 - Model:GA 75VSD+
MODEL:GA90VP_16 - Model:GA 90VSD+	MOVOL:200V - Supply voltage:200 V	MOVOL:230V - Supply voltage:230 V
MOVOL:380V - Supply voltage:380 V	MOVOL:400V - Supply voltage:400 V	MOVOL:460V - Supply voltage:460 V
MOVOL:500V - Supply voltage:500 V	MOVOL:575V - Supply voltage:575 V	OILTYP:RIF - Oil type:Roto inject fluid oil
OILTYP:RXD - Oil type:Roto-Xtend Duty Fluid	PRCMP:APF - Product company:APF	PRCMP:API - Product company:API

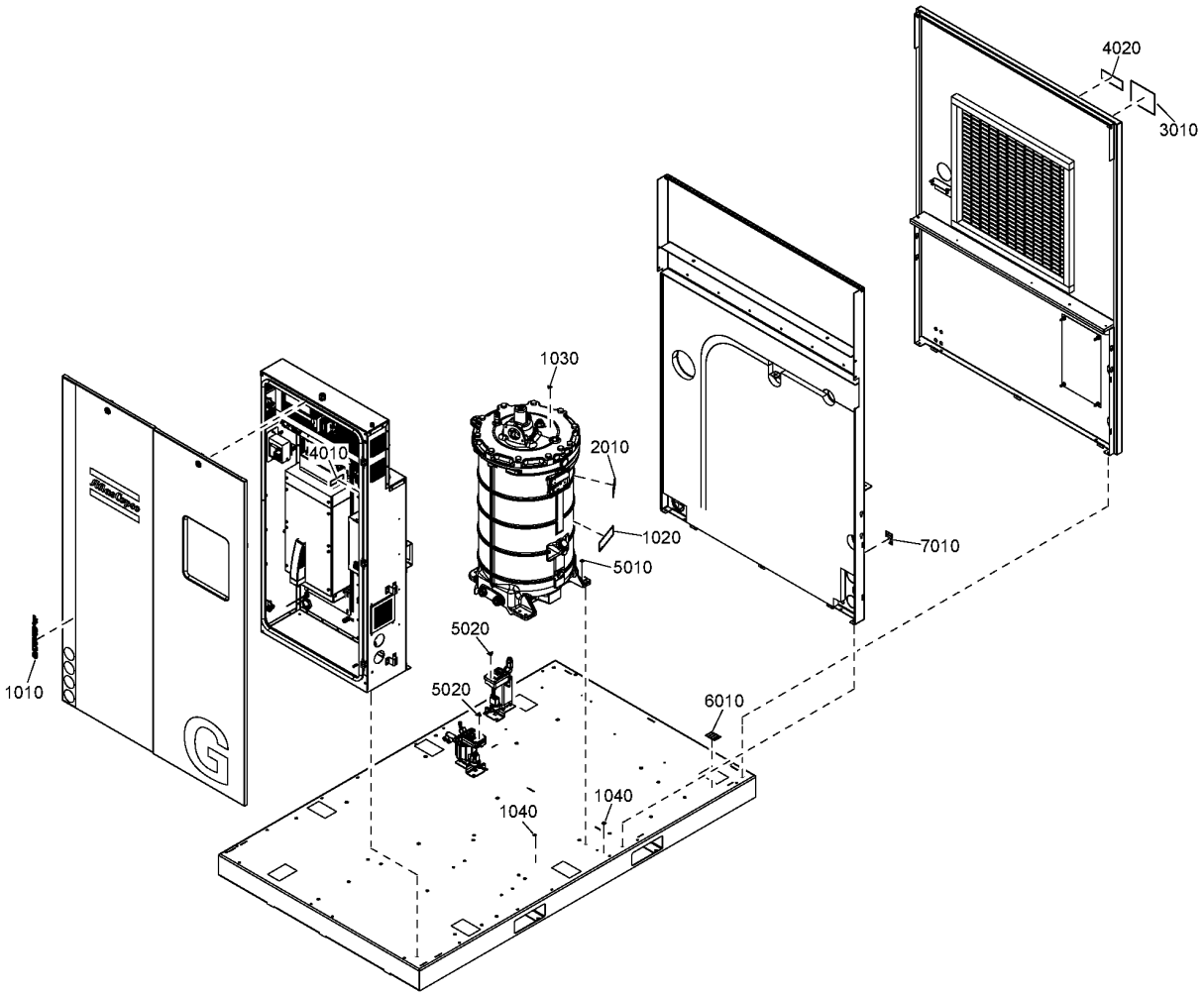
4020
3010
1030
2010
4010
1020
5010
7010
5020
5020
1010
6010
1040
1040

Ref	Part Number	Qty	Name	Validity
1040	1079 9923 72	2	LABEL ELECTRICAL EARTHING	**(02/03/2017 - 12/07/2017)** (((IDRY:N + MODEL:GA90VP_16 , MODEL:GA110VP_16 , MODEL:GA75VP_16) + CAPPRM:CE + FREQ:50HZ + MOVOL:400V , CAPPRM:ASME + FREQ:60HZ + IDRY:Y + MODEL:GA110VP_16 + MOVOL:380V) + CAPPRE:IEC + OILTYP:RIF , (IDRY:N + MODEL:GA75VP_16 + MOVOL:460V , IDRY:Y + MODEL:GA110VP_16 + MOVOL:575V) + CAPPRE:ULCUL + CAPPRM:ASME + FREQ:60HZ + OILTYP:RXD) + COOL:AIR + PRCMP:API **(13/07/2017 - 25/10/2017)** (((((CAPPRM:AS1210 , CAPPRM:CE , CAPPRM:MOM) + MOVOL:400V , CAPPRM:CE + MOVOL:500V) + FREQ:50HZ , (MOVOL:380V , MOVOL:460V) + CAPPRM:ASME + FREQ:60HZ) + OILTYP:RIF , ((MOVOL:200V , MOVOL:400V) + FREQ:50HZ , (MOVOL:200V , MOVOL:460V) + FREQ:60HZ) + CAPPRM:MHLW + OILTYP:RXD) + CAPPRE:IEC , (MOVOL:230V , MOVOL:460V , MOVOL:575V) + CAPPRE:ULCUL + CAPPRM:ASME + FREQ:60HZ + OILTYP:RXD) + COOL:AIR + PRCMP:API **(26/10/2017 - 18/04/2018)** (((((CAPPRM:AS1210 , CAPPRM:CE , CAPPRM:MOM) + MOVOL:400V , CAPPRM:CE + MOVOL:500V) + FREQ:50HZ , (MOVOL:380V , MOVOL:460V) + CAPPRM:ASME + FREQ:60HZ) + OILTYP:RIF , ((MOVOL:200V , MOVOL:400V) + FREQ:50HZ , (MOVOL:200V , MOVOL:460V) + FREQ:60HZ) + CAPPRM:MHLW + OILTYP:RXD) + CAPPRE:IEC , (MOVOL:230V , MOVOL:460V , MOVOL:575V) + CAPPRE:ULCUL + CAPPRM:ASME + FREQ:60HZ + OILTYP:RXD) + (MODEL:GA110VP_16 + PRCMP:APF , PRCMP:API) + COOL:AIR
1040	1079 9923 72	1	LABEL ELECTRICAL EARTHING	**(19/04/2018 - 20/08/2018)** (((((CAPPRM:AS1210 , CAPPRM:CE , CAPPRM:MOM) + MOVOL:400V , CAPPRM:CE + MOVOL:500V) + FREQ:50HZ , (MOVOL:380V , MOVOL:460V) + CAPPRM:ASME + FREQ:60HZ) + OILTYP:RIF , ((MOVOL:200V , MOVOL:400V) + FREQ:50HZ , (MOVOL:200V , MOVOL:460V) + FREQ:60HZ) + CAPPRM:MHLW + OILTYP:RXD) + CAPPRE:IEC , (MOVOL:230V , MOVOL:460V , MOVOL:575V) + CAPPRE:ULCUL + CAPPRM:ASME + FREQ:60HZ + OILTYP:RXD) + (MODEL:GA110VP_16 + PRCMP:APF , PRCMP:API) + COOL:AIR **(21/08/2018 - 30/12/2027)** (((((CAPPRM:AS1210 , CAPPRM:CE , CAPPRM:MOM) + MOVOL:400V , CAPPRM:CE + COOL:AIR + MOVOL:500V) + FREQ:50HZ , (MOVOL:380V , MOVOL:460V) + CAPPRM:ASME + FREQ:60HZ) + OILTYP:RIF , (COOL:AIR + MOVOL:200V , FREQ:50HZ + MOVOL:400V , FREQ:60HZ + MOVOL:460V) + CAPPRM:MHLW + OILTYP:RXD) + CAPPRE:IEC , ((MOVOL:230V , MOVOL:575V) + COOL:AIR , MOVOL:460V) + CAPPRE:ULCUL + CAPPRM:ASME + FREQ:60HZ + OILTYP:RXD) + (MODEL:GA110VP_16 + PRCMP:APF , PRCMP:API) **(31/12/2027 - ...)** (((((CAPPRM:AS1210 , CAPPRM:CE , CAPPRM:MOM) + MOVOL:400V , CAPPRM:CE + COOL:AIR + MOVOL:500V) + FREQ:50HZ , (MOVOL:380V , MOVOL:460V) + CAPPRM:ASME + FREQ:60HZ) + OILTYP:RIF , (FREQ:50HZ + MOVOL:400V , FREQ:60HZ + MOVOL:460V) + CAPPRM:MHLW + OILTYP:RXD) + CAPPRE:IEC , (COOL:AIR + MOVOL:575V , MOVOL:460V) + CAPPRE:ULCUL + CAPPRM:ASME + FREQ:60HZ + OILTYP:RXD) + (MODEL:GA110VP_16 + PRCMP:APF , PRCMP:API) , (CAPPRE:IEC + CAPPRM:MHLW + MOVOL:200V , CAPPRE:ULCUL + CAPPRM:ASME + FREQ:60HZ + MOVOL:230V) + (MODEL:GA75VP_16 , MODEL:GA90VP_16) + COOL:AIR + OILTYP:RXD + PRCMP:API

Legend:

CAPPRE:IEC - Component approval electrical:IEC	CAPPRE:ULCUL - Component approval electrical:UL/cUL	CAPPRM:AS1210 - Component approval mechanical:AS1210
CAPPRM:ASME - Component approval mechanical:ASME	CAPPRM:CE - Component approval mechanical:CE	CAPPRM:MHLW - Component approval mechanical:MHLW
CAPPRM:MOM - Component approval mechanical:MOM	COOL:AIR - Cooling:Air cooled	COOL:WATER - Cooling:Water cooled
FREQ:50HZ - Frequency:50 Hz	FREQ:60HZ - Frequency:60 Hz	IDRY:N - Integrated dryer:No
IDRY:Y - Integrated dryer:Yes	MODEL:GA110VP_16 - Model:GA 110VSD+	MODEL:GA75VP_16 - Model:GA 75VSD+
MODEL:GA90VP_16 - Model:GA 90VSD+	MOVOL:200V - Supply voltage:200 V	MOVOL:230V - Supply voltage:230 V
MOVOL:380V - Supply voltage:380 V	MOVOL:400V - Supply voltage:400 V	MOVOL:460V - Supply voltage:460 V
MOVOL:500V - Supply voltage:500 V	MOVOL:575V - Supply voltage:575 V	OILTYP:RIF - Oil type:Roto inject fluid oil
OILTYP:RXD - Oil type:Roto-Xtend Duty Fluid	PRCMP:APF - Product company:APF	PRCMP:API - Product company:API

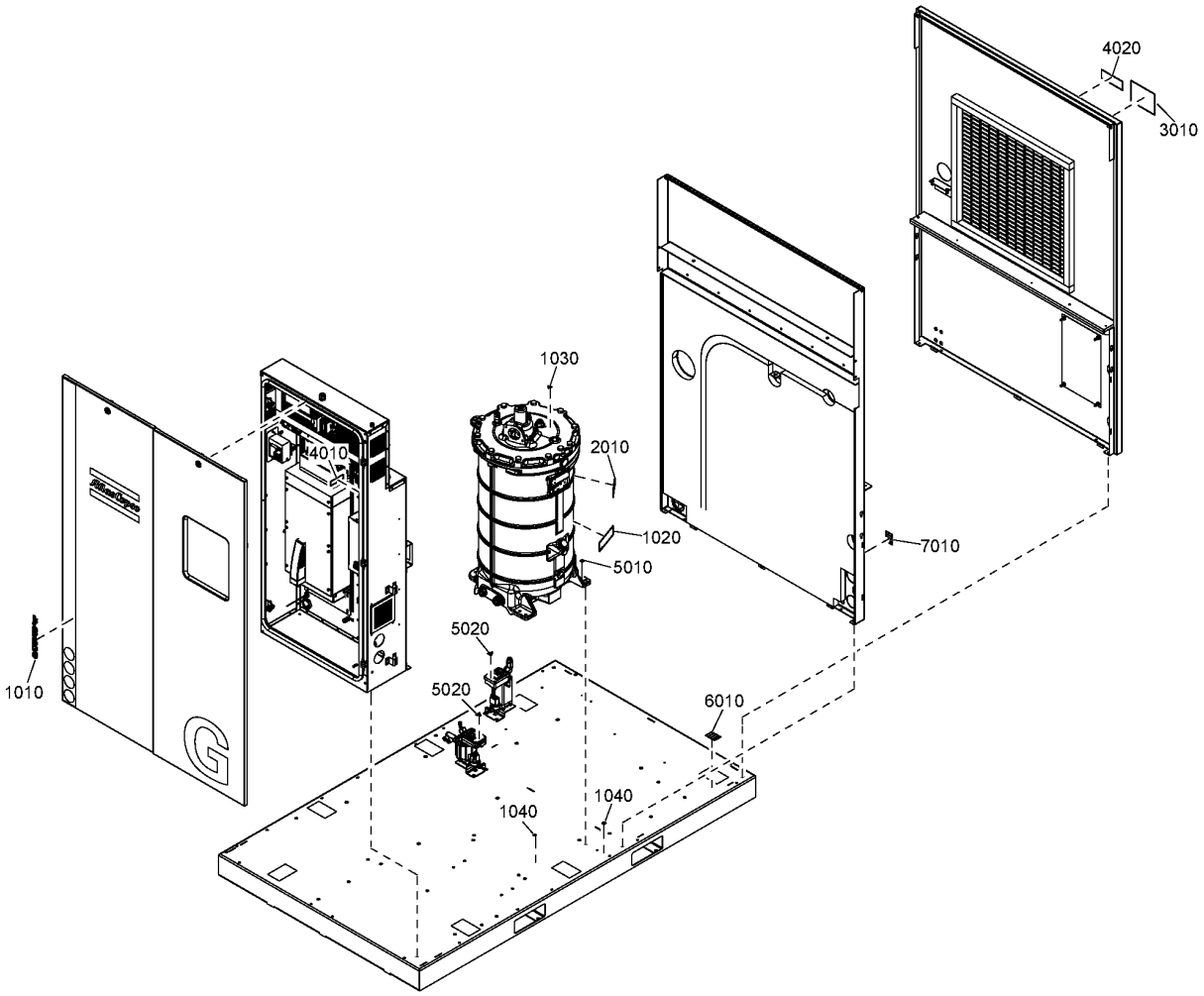
4020
3010
1030
2010
4010
1020
5010
7010
5020
5020
1010
6010
1040
1040

Ref	Part Number	Qty	Name	Validity
2010	1629 0334 00	1	DECAL ROTO-XTEND DUTY FLUID	**(13/09/2017 - 25/10/2017)** (((MOVOL:230V , MOVOL:460V , MOVOL:575V) + CAPPRE:ULCUL + CAPPRM:ASME , CAPPRE:IEC + CAPPRM:MHLW + MOVOL:460V) + FREQ:60HZ , (FREQ:50HZ + MOVOL:400V , MOVOL:200V) + CAPPRE:IEC + CAPPRM:MHLW) + COOL:AIR + OILTYP:RXD + PRCMP:API **(26/10/2017 - 20/08/2018)** (((MOVOL:230V , MOVOL:460V , MOVOL:575V) + CAPPRE:ULCUL + CAPPRM:ASME , CAPPRE:IEC + CAPPRM:MHLW + MOVOL:460V) + FREQ:60HZ , (FREQ:50HZ + MOVOL:400V , MOVOL:200V) + CAPPRE:IEC + CAPPRM:MHLW) + (MODEL:GA110VP_16 + PRCMP:APF , PRCMP:API) + COOL:AIR + OILTYP:RXD **(21/08/2018 - 04/12/2018)** ((((CAPPRM:AS1210 , CAPPRM:CE , CAPPRM:MOM) + FREQ:50HZ + MOVOL:400V , (MOVOL:380V , MOVOL:460V) + CAPPRM:ASME + FREQ:60HZ) + COOL:WATER + OILTYP:RIF , (COOL:AIR + MOVOL:200V , FREQ:50HZ + MOVOL:400V , FREQ:60HZ + MOVOL:460V) + CAPPRM:MHLW + OILTYP:RXD) + CAPPRE:IEC , ((MOVOL:230V , MOVOL:575V) + COOL:AIR , MOVOL:460V) + CAPPRE:ULCUL + CAPPRM:ASME + FREQ:60HZ + OILTYP:RXD) + (MODEL:GA110VP_16 + PRCMP:APF , PRCMP:API) **(05/12/2018 - 30/12/2027)** ((((MOVOL:230V , MOVOL:575V) + COOL:AIR , MOVOL:460V) + CAPPRE:ULCUL + CAPPRM:ASME , (COOL:AIR + MOVOL:200V , MOVOL:460V) + CAPPRE:IEC + CAPPRM:MHLW) + FREQ:60HZ , (COOL:AIR + MOVOL:200V , MOVOL:400V) + CAPPRE:IEC + CAPPRM:MHLW + FREQ:50HZ) + (MODEL:GA110VP_16 + PRCMP:APF , PRCMP:API) + OILTYP:RXD , (MOVOL:380V , MOVOL:460V) + CAPPRE:IEC + CAPPRM:ASME + COOL:WATER + FREQ:60HZ + MODEL:GA110VP_16 + OILTYP:RIF + PRCMP:APF **(31/12/2027 - ...)** ((((COOL:AIR + MOVOL:575V , MOVOL:460V) + CAPPRE:ULCUL + CAPPRM:ASME , CAPPRE:IEC + CAPPRM:MHLW + MOVOL:460V) + FREQ:60HZ , CAPPRE:IEC + CAPPRM:MHLW + FREQ:50HZ + MOVOL:400V) + (MODEL:GA110VP_16 + PRCMP:APF , PRCMP:API) , (CAPPRE:IEC + CAPPRM:MHLW + MOVOL:200V , CAPPRE:ULCUL + CAPPRM:ASME + FREQ:60HZ + MOVOL:230V) + (MODEL:GA75VP_16 , MODEL:GA90VP_16) + COOL:AIR + PRCMP:API) + OILTYP:RXD , (MOVOL:380V , MOVOL:460V) + CAPPRE:IEC + CAPPRM:ASME + COOL:WATER + FREQ:60HZ + MODEL:GA110VP_16 + OILTYP:RIF + PRCMP:APF
2010	1629 0333 00	1	DECAL ROTO-INJECT NDURANCE	**(02/03/2017 - 12/07/2017)** ((IDRY:N + MODEL:GA90VP_16 , MODEL:GA110VP_16 , MODEL:GA75VP_16) + CAPPRM:CE + FREQ:50HZ + MOVOL:400V , CAPPRM:ASME + FREQ:60HZ + IDRY:Y + MODEL:GA110VP_16 + MOVOL:380V) + CAPPRE:IEC + COOL:AIR + OILTYP:RIF + PRCMP:API **(13/07/2017 - 25/10/2017)** (((CAPPRM:AS1210 , CAPPRM:CE , CAPPRM:MOM) + MOVOL:400V , CAPPRM:CE + MOVOL:500V) + FREQ:50HZ , (MOVOL:380V , MOVOL:460V) + CAPPRM:ASME + FREQ:60HZ) + CAPPRE:IEC + COOL:AIR + OILTYP:RIF + PRCMP:API **(26/10/2017 - 04/12/2018)** (((CAPPRM:AS1210 , CAPPRM:CE , CAPPRM:MOM) + MOVOL:400V , CAPPRM:CE + MOVOL:500V) + FREQ:50HZ , (MOVOL:380V , MOVOL:460V) + CAPPRM:ASME + FREQ:60HZ) + (MODEL:GA110VP_16 + PRCMP:APF , PRCMP:API) + CAPPRE:IEC + COOL:AIR + OILTYP:RIF **(05/12/2018 - 10/03/2019)** ((((CAPPRM:AS1210 , CAPPRM:CE , CAPPRM:MOM) + MOVOL:400V , CAPPRM:CE + COOL:AIR + MOVOL:500V) + FREQ:50HZ , (MOVOL:380V , MOVOL:460V) + CAPPRM:ASME + COOL:AIR + FREQ:60HZ) + (MODEL:GA110VP_16 + PRCMP:APF , PRCMP:API) , (MOVOL:380V , MOVOL:460V) + CAPPRM:ASME + COOL:WATER + FREQ:60HZ + PRCMP:API) + CAPPRE:IEC + OILTYP:RIF
2010	1629 0336 00	1	DECAL	**(11/03/2019 - ...)** ((((CAPPRM:AS1210 , CAPPRM:CE , CAPPRM:MOM) + MOVOL:400V , CAPPRM:CE + COOL:AIR + MOVOL:500V) + FREQ:50HZ , (MOVOL:380V , MOVOL:460V) + CAPPRM:ASME + COOL:AIR + FREQ:60HZ) + (MODEL:GA110VP_16 + PRCMP:APF , PRCMP:API) , (MOVOL:380V , MOVOL:460V) + CAPPRM:ASME + COOL:WATER + FREQ:60HZ + PRCMP:API) + CAPPRE:IEC + OILTYP:RIF
3010		2	DATA PLATE	**(13/07/2017 - ...)**

Legend:

CAPPRE:IEC - Component approval electrical:IEC
CAPPRE:ULCUL - Component approval electrical:UL/cUL
CAPPRM:AS1210 - Component approval mechanical:AS1210
CAPPRM:ASME - Component approval mechanical:ASME
CAPPRM:CE - Component approval mechanical:CE
CAPPRM:MHLW - Component approval mechanical:MHLW
CAPPRM:MOM - Component approval mechanical:MOM
COOL:AIR - Cooling:Air cooled
COOL:WATER - Cooling:Water cooled
FREQ:50HZ - Frequency:50 Hz
FREQ:60HZ - Frequency:60 Hz
IDRY:N - Integrated dryer:No
IDRY:Y - Integrated dryer:Yes
MODEL:GA110VP_16 - Model:GA 110VSD+
MODEL:GA75VP_16 - Model:GA 75VSD+
MODEL:GA90VP_16 - Model:GA 90VSD+
MOVOL:200V - Supply voltage:200 V
MOVOL:230V - Supply voltage:230 V
MOVOL:380V - Supply voltage:380 V
MOVOL:400V - Supply voltage:400 V
MOVOL:460V - Supply voltage:460 V
MOVOL:500V - Supply voltage:500 V
MOVOL:575V - Supply voltage:575 V
OILTYP:RIF - Oil type:Roto inject fluid oil
OILTYP:RXD - Oil type:Roto-Xtend Duty Fluid
PRCMP:APF - Product company:APF
PRCMP:API - Product company:API

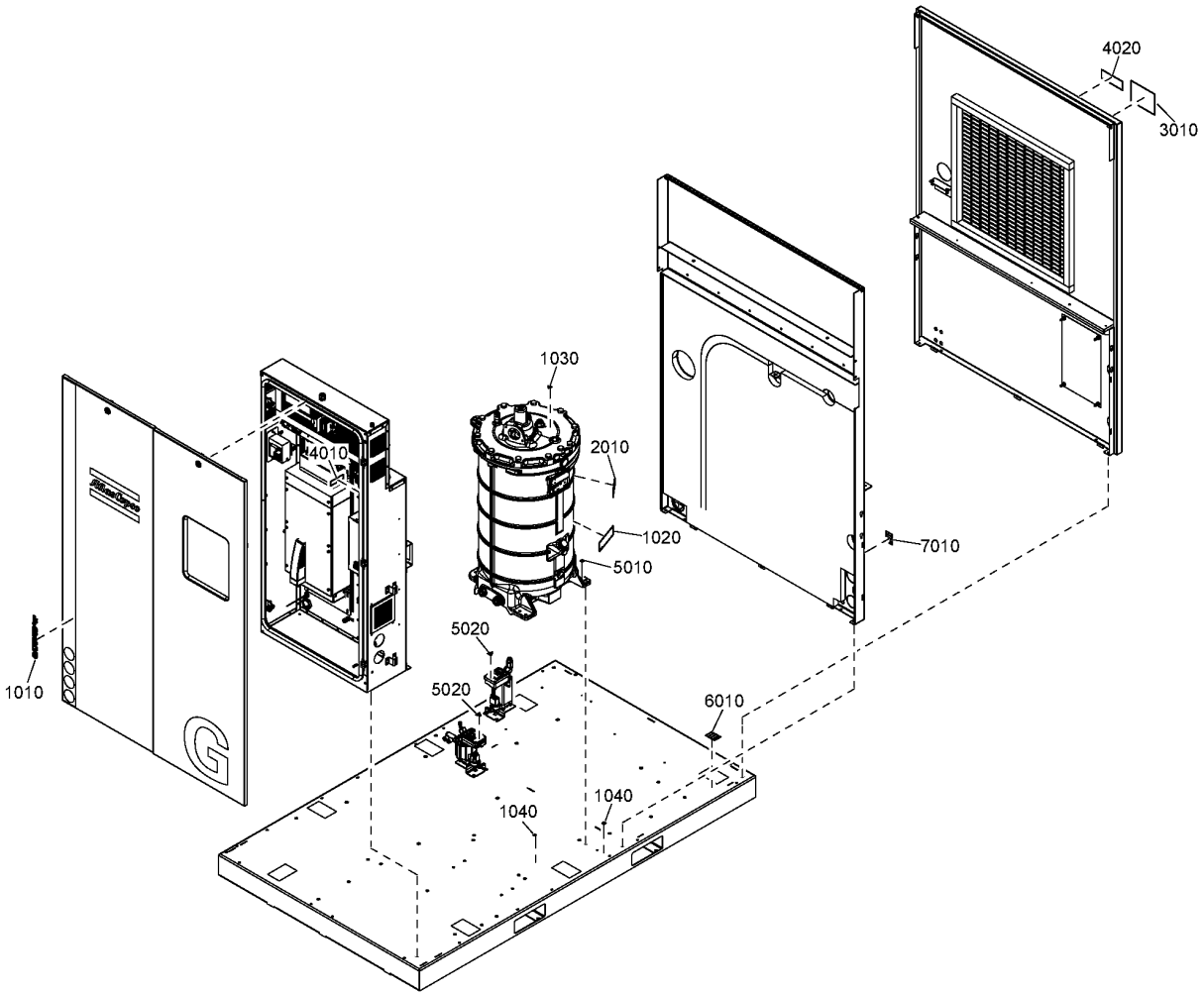
4020
3010
1030
2010
4010
1020
5010
7010
5020
5020
1010
6010
1040
1040

Ref	Part Number	Qty	Name	Validity
4010	1622 7305 00	1	UL TRACE LABEL	**(02/03/2017 - 12/07/2017)** (IDRY:N + MODEL:GA75VP_16 + MOVOL:460V , IDRY:Y + MODEL:GA110VP_16 + MOVOL:575V) + CAPPRE:ULCUL + CAPPRM:ASME + COOL:AIR + FREQ:60HZ + OILTYP:RXD + PRCMP:API **(13/07/2017 - 25/10/2017)** (MOVOL:230V , MOVOL:460V , MOVOL:575V) + CAPPRE:ULCUL + CAPPRM:ASME + COOL:AIR + FREQ:60HZ + OILTYP:RXD + PRCMP:API **(26/10/2017 - 20/08/2018)** (MODEL:GA110VP_16 + PRCMP:APF , PRCMP:API) + (MOVOL:230V , MOVOL:460V , MOVOL:575V) + CAPPRE:ULCUL + CAPPRM:ASME + COOL:AIR + FREQ:60HZ + OILTYP:RXD **(21/08/2018 - 30/12/2027)** ((MOVOL:230V , MOVOL:460V , MOVOL:575V) + COOL:AIR , COOL:WATER + MOVOL:460V) + (MODEL:GA110VP_16 + PRCMP:APF , PRCMP:API) + CAPPRE:ULCUL + CAPPRM:ASME + FREQ:60HZ + OILTYP:RXD **(31/12/2027 - ...)** ((COOL:AIR + MOVOL:575V , MOVOL:460V) + (MODEL:GA110VP_16 + PRCMP:APF , PRCMP:API) , (MODEL:GA75VP_16 , MODEL:GA90VP_16) + COOL:AIR + MOVOL:230V + PRCMP:API) + CAPPRE:ULCUL + CAPPRM:ASME + FREQ:60HZ + OILTYP:RXD
4020	2204 2199 00	1	DECAL	**(28/11/2018 - 30/12/2027)** ((MOVOL:230V , MOVOL:460V , MOVOL:575V) + COOL:AIR , COOL:WATER + MOVOL:460V) + (MODEL:GA110VP_16 + PRCMP:APF , PRCMP:API) + CAPPRE:ULCUL + CAPPRM:ASME + FREQ:60HZ + OILTYP:RXD **(31/12/2027 - ...)** ((COOL:AIR + MOVOL:575V , MOVOL:460V) + (MODEL:GA110VP_16 + PRCMP:APF , PRCMP:API) , (MODEL:GA75VP_16 , MODEL:GA90VP_16) + COOL:AIR + MOVOL:230V + PRCMP:API) + CAPPRE:ULCUL + CAPPRM:ASME + FREQ:60HZ + OILTYP:RXD
5010	1079 9923 72	2	LABEL ELECTRICAL EARTHING	**(02/03/2017 - 12/07/2017)** CAPPRE:ULCUL + CAPPRM:ASME + COOL:AIR + FREQ:60HZ + IDRY:Y + MODEL:GA110VP_16 + MOVOL:575V + OILTYP:RXD + PRCMP:API **(13/07/2017 - 25/10/2017)** ((((MOVOL:230V , MOVOL:575V) + CAPPRE:ULCUL + CAPPRM:ASME , CAPPRE:IEC + CAPPRM:MHLW + MOVOL:200V) + FREQ:60HZ , CAPPRE:IEC + CAPPRM:MHLW + FREQ:50HZ + MOVOL:200V) + OILTYP:RXD , CAPPRE:IEC + CAPPRM:CE + FREQ:50HZ + MOVOL:500V + OILTYP:RIF) + COOL:AIR + PRCMP:API **(26/10/2017 - 30/12/2027)** ((((MOVOL:230V , MOVOL:575V) + CAPPRE:ULCUL + CAPPRM:ASME , CAPPRE:IEC + CAPPRM:MHLW + MOVOL:200V) + FREQ:60HZ , CAPPRE:IEC + CAPPRM:MHLW + FREQ:50HZ + MOVOL:200V) + OILTYP:RXD , CAPPRE:IEC + CAPPRM:CE + FREQ:50HZ + MOVOL:500V + OILTYP:RIF) + (MODEL:GA110VP_16 + PRCMP:APF , PRCMP:API) + COOL:AIR **(31/12/2027 - ...)** ((CAPPRE:IEC + CAPPRM:CE + FREQ:50HZ + MOVOL:500V + OILTYP:RIF , CAPPRE:ULCUL + CAPPRM:ASME + FREQ:60HZ + MOVOL:575V + OILTYP:RXD) + (MODEL:GA110VP_16 + PRCMP:APF , PRCMP:API) , (CAPPRE:IEC + CAPPRM:MHLW + MOVOL:200V , CAPPRE:ULCUL + CAPPRM:ASME + FREQ:60HZ + MOVOL:230V) + (MODEL:GA75VP_16 , MODEL:GA90VP_16) + OILTYP:RXD + PRCMP:API) + COOL:AIR

Legend:

CAPPRE:IEC - Component approval electrical:IEC
CAPPRE:ULCUL - Component approval electrical:UL/cUL
CAPPRM:AS1210 - Component approval mechanical:AS1210
CAPPRM:ASME - Component approval mechanical:ASME
CAPPRM:CE - Component approval mechanical:CE
CAPPRM:MHLW - Component approval mechanical:MHLW
CAPPRM:MOM - Component approval mechanical:MOM
COOL:AIR - Cooling:Air cooled
COOL:WATER - Cooling:Water cooled
FREQ:50HZ - Frequency:50 Hz
FREQ:60HZ - Frequency:60 Hz
IDRY:N - Integrated dryer:No
IDRY:Y - Integrated dryer:Yes
MODEL:GA110VP_16 - Model:GA 110VSD+
MODEL:GA75VP_16 - Model:GA 75VSD+
MODEL:GA90VP_16 - Model:GA 90VSD+
MOVOL:200V - Supply voltage:200 V
MOVOL:230V - Supply voltage:230 V
MOVOL:380V - Supply voltage:380 V
MOVOL:400V - Supply voltage:400 V
MOVOL:460V - Supply voltage:460 V
MOVOL:500V - Supply voltage:500 V
MOVOL:575V - Supply voltage:575 V
OILTYP:RIF - Oil type:Roto inject fluid oil
OILTYP:RXD - Oil type:Roto-Xtend Duty Fluid
PRCMP:APF - Product company:APF
PRCMP:API - Product company:API

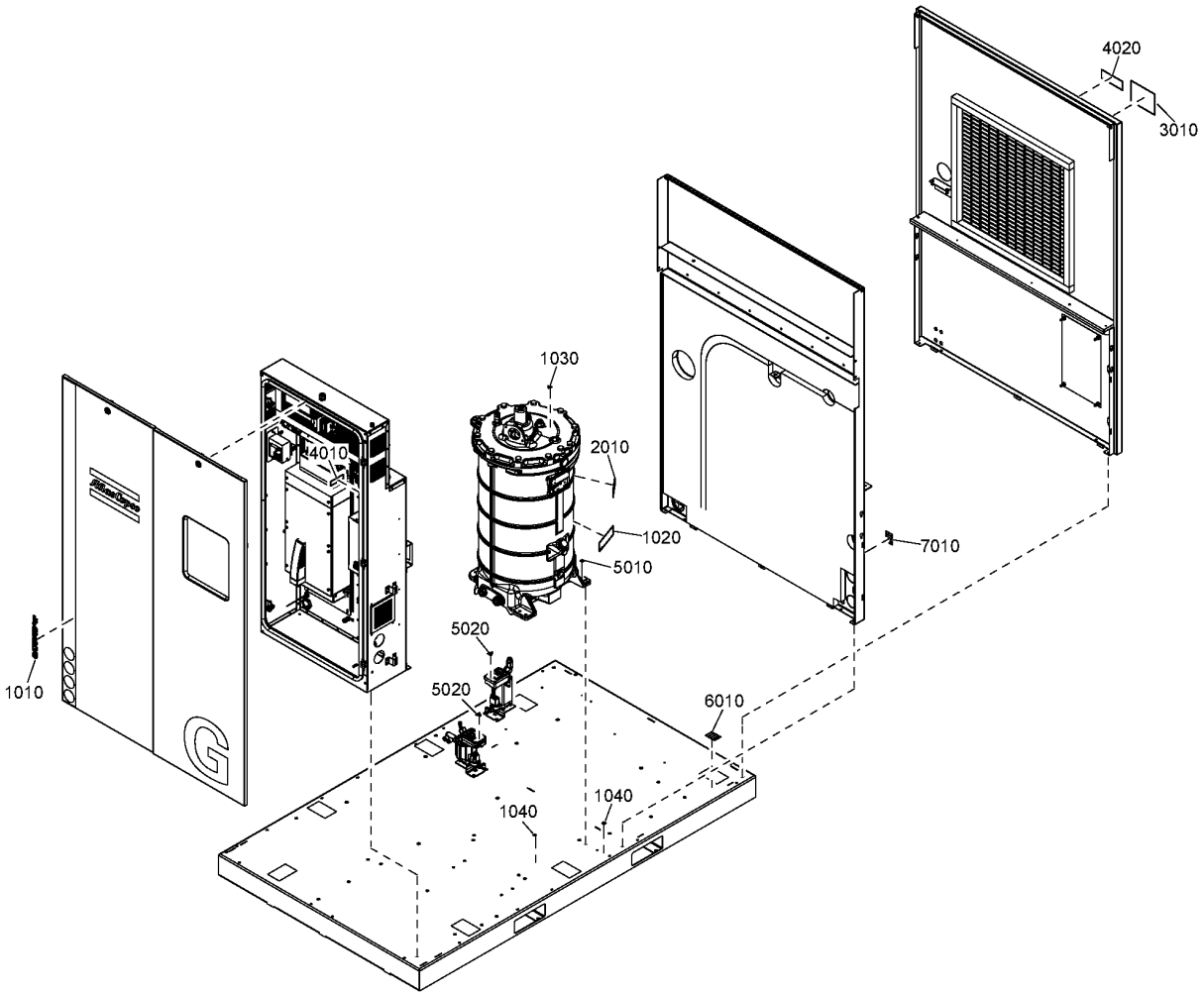
4020
3010
1030
2010
4010
1020
5010
7010
5020
5020
1010
6010
1040
1040

Ref	Part Number	Qty	Name	Validity
5020	1088 1001 01	2	WARNING MARK	**(02/03/2017 - 12/07/2017)** CAPPRE:ULCUL + CAPPRM:ASME + COOL:AIR + FREQ:60HZ + IDRY:Y + MODEL:GA110VP_16 + MOVOL:575V + OILTYP:RXD + PRCMP:API **(13/07/2017 - 25/10/2017)** ((((MOVOL:230V , MOVOL:575V) + CAPPRE:ULCUL + CAPPRM:ASME , CAPPRE:IEC + CAPPRM:MHLW + MOVOL:200V) + FREQ:60HZ , CAPPRE:IEC + CAPPRM:MHLW + FREQ:50HZ + MOVOL:200V) + OILTYP:RXD , CAPPRE:IEC + CAPPRM:CE + FREQ:50HZ + MOVOL:500V + OILTYP:RIF) + COOL:AIR + PRCMP:API **(26/10/2017 - 30/12/2027)** ((((MOVOL:230V , MOVOL:575V) + CAPPRE:ULCUL + CAPPRM:ASME , CAPPRE:IEC + CAPPRM:MHLW + MOVOL:200V) + FREQ:60HZ , CAPPRE:IEC + CAPPRM:MHLW + FREQ:50HZ + MOVOL:200V) + OILTYP:RXD , CAPPRE:IEC + CAPPRM:CE + FREQ:50HZ + MOVOL:500V + OILTYP:RIF) + (MODEL:GA110VP_16 + PRCMP:APF , PRCMP:API) + COOL:AIR **(31/12/2027 - ...)** ((CAPPRE:IEC + CAPPRM:CE + FREQ:50HZ + MOVOL:500V + OILTYP:RIF , CAPPRE:ULCUL + CAPPRM:ASME + FREQ:60HZ + MOVOL:575V + OILTYP:RXD) + (MODEL:GA110VP_16 + PRCMP:APF , PRCMP:API) , (CAPPRE:IEC + CAPPRM:MHLW + MOVOL:200V , CAPPRE:ULCUL + CAPPRM:ASME + FREQ:60HZ + MOVOL:230V) + (MODEL:GA75VP_16 , MODEL:GA90VP_16) + OILTYP:RXD + PRCMP:API) + COOL:AIR
6010	1649 8003 64	1	DECAL TRANSFORMER FUSE 300A	**(06/07/2017 - 12/07/2017)** CAPPRE:ULCUL + CAPPRM:ASME + COOL:AIR + FREQ:60HZ + IDRY:Y + MODEL:GA110VP_16 + MOVOL:575V + OILTYP:RXD + PRCMP:API **(13/07/2017 - 25/10/2017)** ((CAPPRM:CE + FREQ:50HZ + MOVOL:500V + OILTYP:RIF , CAPPRM:MHLW + MOVOL:200V + OILTYP:RXD) + CAPPRE:IEC , CAPPRE:ULCUL + CAPPRM:ASME + FREQ:60HZ + MOVOL:575V + OILTYP:RXD) + COOL:AIR + MODEL:GA110VP_16 + PRCMP:API **(26/10/2017 - 30/12/2027)** ((CAPPRM:CE + FREQ:50HZ + MOVOL:500V + OILTYP:RIF , CAPPRM:MHLW + MOVOL:200V + OILTYP:RXD) + CAPPRE:IEC , CAPPRE:ULCUL + CAPPRM:ASME + FREQ:60HZ + MOVOL:575V + OILTYP:RXD) + COOL:AIR + MODEL:GA110VP_16 **(31/12/2027 - ...)** (CAPPRE:IEC + CAPPRM:CE + FREQ:50HZ + MOVOL:500V + OILTYP:RIF , CAPPRE:ULCUL + CAPPRM:ASME + FREQ:60HZ + MOVOL:575V + OILTYP:RXD) + COOL:AIR + MODEL:GA110VP_16
6010	1649 8003 60	1	DECAL TRANSFORMER FUSE 200A	**(20/07/2017 - ...)** ((MOVOL:230V , MOVOL:575V) + MODEL:GA75VP_16 , MODEL:GA90VP_16 + MOVOL:230V) + CAPPRE:ULCUL + CAPPRM:ASME + COOL:AIR + FREQ:60HZ + OILTYP:RXD + PRCMP:API
6010	1649 8003 62	1	DECAL TRANSFORMER FUSE 250A	**(20/07/2017 - 25/10/2017)** ((CAPPRM:CE + FREQ:50HZ + MOVOL:500V + OILTYP:RIF , CAPPRM:MHLW + MOVOL:200V + OILTYP:RXD) + CAPPRE:IEC + MODEL:GA90VP_16 , CAPPRE:ULCUL + CAPPRM:ASME + FREQ:60HZ + MODEL:GA110VP_16 + MOVOL:230V + OILTYP:RXD) + COOL:AIR + PRCMP:API **(26/10/2017 - 30/12/2027)** ((CAPPRM:CE + FREQ:50HZ + MOVOL:500V + OILTYP:RIF , CAPPRM:MHLW + MOVOL:200V + OILTYP:RXD) + CAPPRE:IEC + MODEL:GA90VP_16 + PRCMP:API , CAPPRE:ULCUL + CAPPRM:ASME + FREQ:60HZ + MODEL:GA110VP_16 + MOVOL:230V + OILTYP:RXD) + COOL:AIR **(31/12/2027 - ...)** (CAPPRM:CE + FREQ:50HZ + MOVOL:500V + OILTYP:RIF , CAPPRM:MHLW + MOVOL:200V + OILTYP:RXD) + CAPPRE:IEC + COOL:AIR + MODEL:GA90VP_16 + PRCMP:API
6010	1649 8003 61	1	DECAL TRANSFORMER FUSE 225A	**(20/07/2017 - ...)** ((CAPPRM:CE + FREQ:50HZ + MOVOL:500V + OILTYP:RIF , CAPPRM:MHLW + MOVOL:200V + OILTYP:RXD) + CAPPRE:IEC + MODEL:GA75VP_16 , CAPPRE:ULCUL + CAPPRM:ASME + FREQ:60HZ + MODEL:GA90VP_16 + MOVOL:575V + OILTYP:RXD) + COOL:AIR + PRCMP:API

Legend:

CAPPRE:IEC - Component approval electrical:IEC
CAPPRE:ULCUL - Component approval electrical:UL/cUL
CAPPRM:AS1210 - Component approval mechanical:AS1210
CAPPRM:ASME - Component approval mechanical:ASME
CAPPRM:CE - Component approval mechanical:CE
CAPPRM:MHLW - Component approval mechanical:MHLW
CAPPRM:MOM - Component approval mechanical:MOM
COOL:AIR - Cooling:Air cooled
COOL:WATER - Cooling:Water cooled
FREQ:50HZ - Frequency:50 Hz
FREQ:60HZ - Frequency:60 Hz
IDRY:N - Integrated dryer:No
IDRY:Y - Integrated dryer:Yes
MODEL:GA110VP_16 - Model:GA 110VSD+
MODEL:GA75VP_16 - Model:GA 75VSD+
MODEL:GA90VP_16 - Model:GA 90VSD+
MOVOL:200V - Supply voltage:200 V
MOVOL:230V - Supply voltage:230 V
MOVOL:380V - Supply voltage:380 V
MOVOL:400V - Supply voltage:400 V
MOVOL:460V - Supply voltage:460 V
MOVOL:500V - Supply voltage:500 V
MOVOL:575V - Supply voltage:575 V
OILTYP:RIF - Oil type:Roto inject fluid oil
OILTYP:RXD - Oil type:Roto-Xtend Duty Fluid
PRCMP:APF - Product company:APF
PRCMP:API - Product company:API

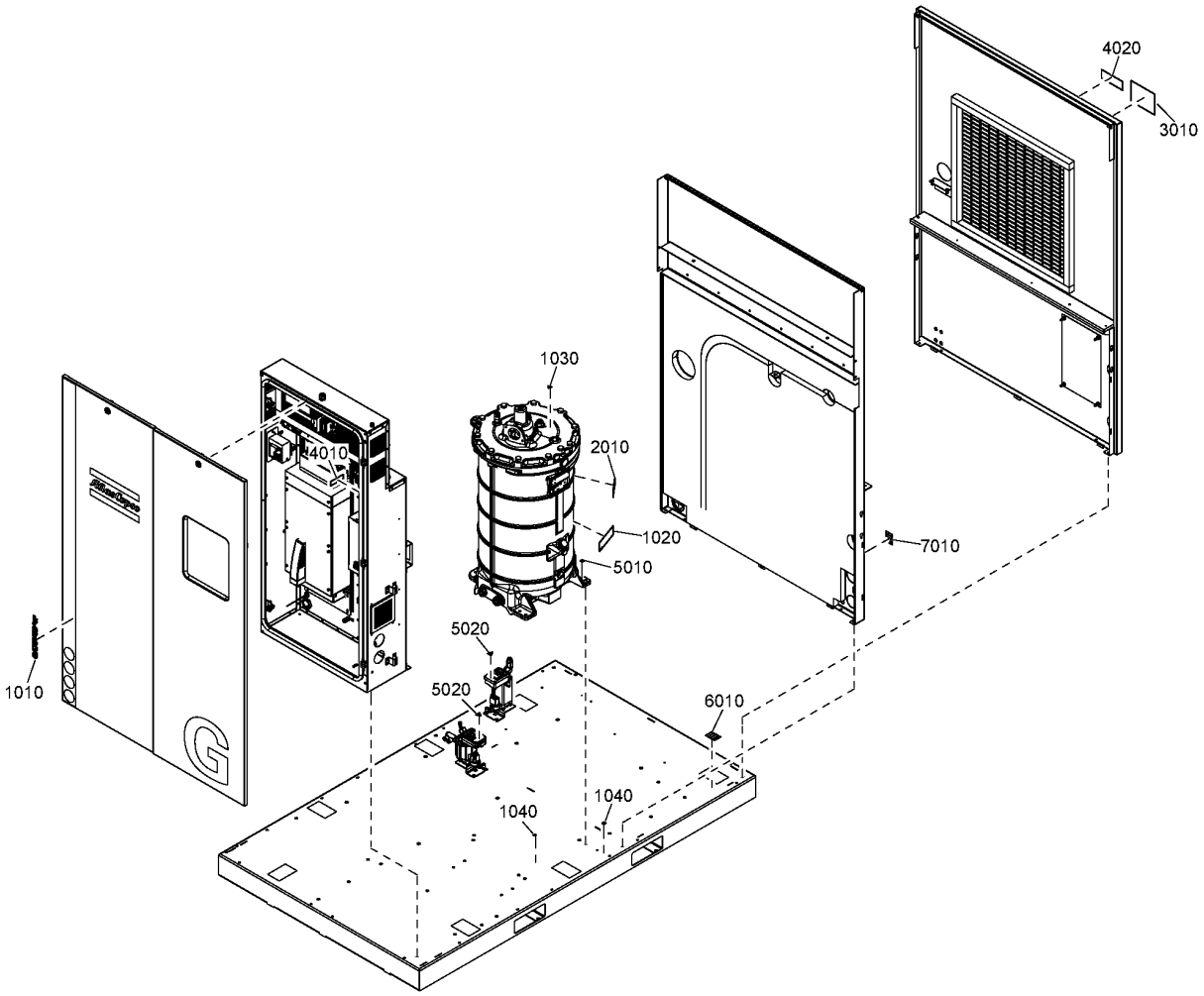
4020
3010
1030
2010
4010
1020
5010
7010
5020
5020
1010
6010
1040
1040

Ref	Part Number	Qty	Name	Validity
7010	1649 8003 65	1	DECAL FUSE 20A	**(06/07/2017 - 12/07/2017)** CAPPRE:ULCUL + CAPPRM:ASME + COOL:AIR + FREQ:60HZ + IDRY:Y + MODEL:GA110VP_16 + MOVOL:575V + OILTYP:RXD + PRCMP:API **(13/07/2017 - 25/10/2017)** (CAPPRE:IEC + CAPPRM:CE + FREQ:50HZ + MOVOL:500V + OILTYP:RIF , CAPPRE:ULCUL + CAPPRM:ASME + FREQ:60HZ + MOVOL:575V + OILTYP:RXD) + COOL:AIR + PRCMP:API **(26/10/2017 - ...)** (CAPPRE:IEC + CAPPRM:CE + FREQ:50HZ + MOVOL:500V + OILTYP:RIF , CAPPRE:ULCUL + CAPPRM:ASME + FREQ:60HZ + MOVOL:575V + OILTYP:RXD) + (MODEL:GA110VP_16 + PRCMP:APF , PRCMP:API) + COOL:AIR

Legend:

CAPPRE:IEC - Component approval electrical:IEC	CAPPRE:ULCUL - Component approval electrical:UL/cUL	CAPPRM:AS1210 - Component approval mechanical:AS1210
CAPPRM:ASME - Component approval mechanical:ASME	CAPPRM:CE - Component approval mechanical:CE	CAPPRM:MHLW - Component approval mechanical:MHLW
CAPPRM:MOM - Component approval mechanical:MOM	COOL:AIR - Cooling:Air cooled	COOL:WATER - Cooling:Water cooled
FREQ:50HZ - Frequency:50 Hz	FREQ:60HZ - Frequency:60 Hz	IDRY:N - Integrated dryer:No
IDRY:Y - Integrated dryer:Yes	MODEL:GA110VP_16 - Model:GA 110VSD+	MODEL:GA75VP_16 - Model:GA 75VSD+
MODEL:GA90VP_16 - Model:GA 90VSD+	MOVOL:200V - Supply voltage:200 V	MOVOL:230V - Supply voltage:230 V
MOVOL:380V - Supply voltage:380 V	MOVOL:400V - Supply voltage:400 V	MOVOL:460V - Supply voltage:460 V
MOVOL:500V - Supply voltage:500 V	MOVOL:575V - Supply voltage:575 V	OILTYP:RIF - Oil type:Roto inject fluid oil
OILTYP:RXD - Oil type:Roto-Xtend Duty Fluid	PRCMP:APF - Product company:APF	PRCMP:API - Product company:API

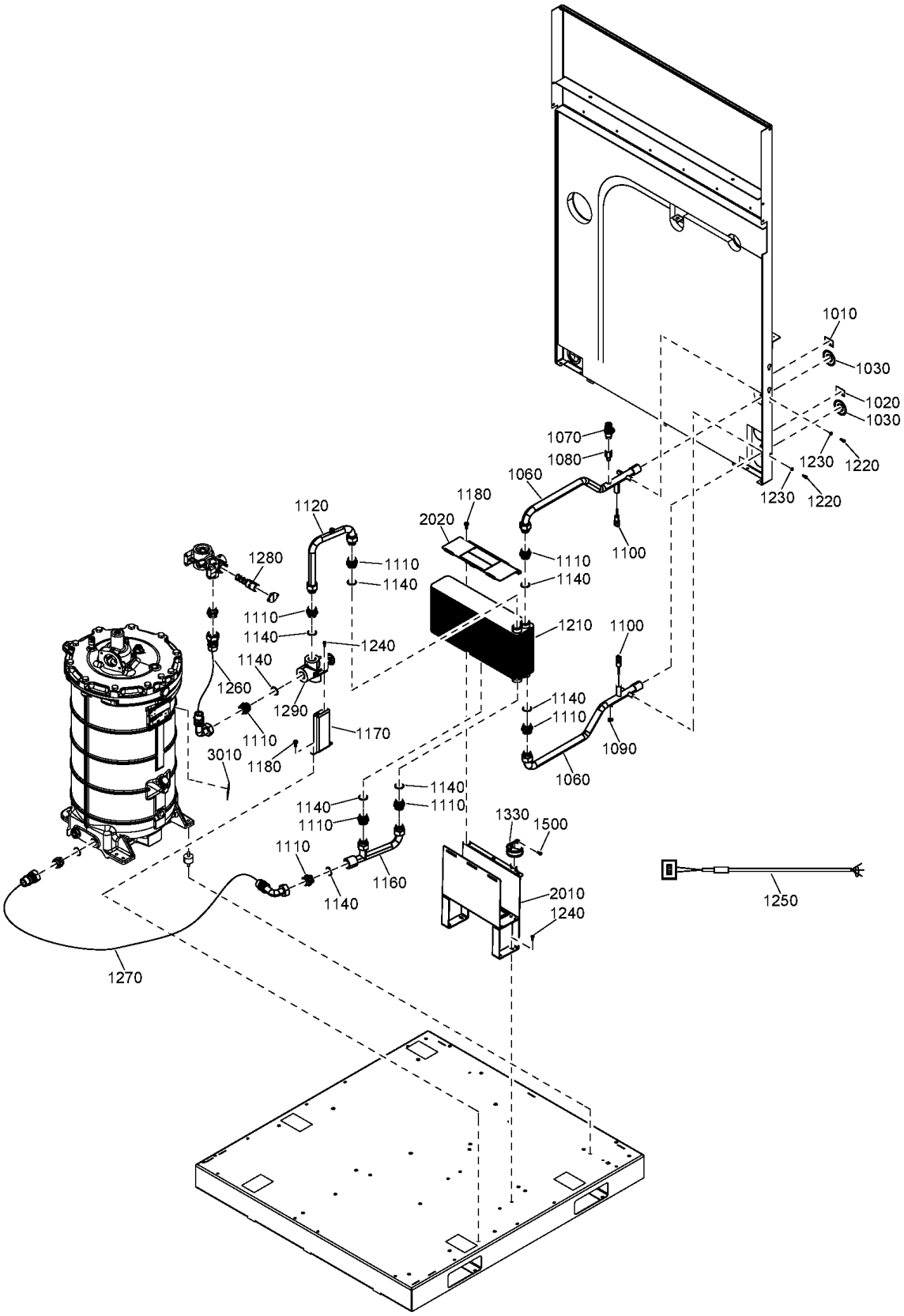
1010
1030
1020
1030
1230
1220
1230
1220
1070
1080
1060
1180
2020
1100
1120
1110
1140
1280
1110
1140
1240
1210
1100
1140
1260
1290
1110
1170
3010
1180
1140
1110
1090
1060
1140
1110
1140
1110
1330
1500
1110
1160
1140
2010
1240
1250
1270

Ref	Part Number	Qty	Name	Validity
	8092 3759 33	1	STANDARD OPTION - ENERGY RECOVERY	
1010	1079 9913 79	1	STICKER	(17/10/2017 - ...)
1020	1079 9913 69	1	STICKER	(17/10/2017 - ...)
1030	1631 0505 00	2	SEAL	(17/10/2017 - ...)
1060	1649 8003 67	2	PIPE	(17/10/2017 - ...)
1070	1625 2046 00	1	RELIEF VALVE	(17/10/2017 - ...)
1080	0605 8350 79	1	BUSHING	(17/10/2017 - ...)
1090	0686 3718 24	1	PLUG	(17/10/2017 - ...)
1100	1089 0574 70	2	THERMOMETER PT1000	(19/04/2018 - ...)
1100	1089 0708 12	2	THERMOMETER PT1000	(17/10/2017 - 18/04/2018)
1110	1649 8004 27	8	NIPPLE	(18/12/2017 - ...)
1120	1649 8003 88	1	PIPE	(17/10/2017 - ...)
1140	0663 3130 00	8	O-RING	(17/10/2017 - ...)
1160	1649 8003 87	1	PIPE	(17/10/2017 - ...)
1170	1649 8003 89	1	BRACKET	(17/10/2017 - ...)
1180	0147 1963 08	7	HEXAGON BOLT	(18/12/2017 - ...)
1210	1622 5520 00	1	HEAT EXCHANGER	(17/10/2017 - ...)
1220	0211 1246 03	2	SCREW	(17/10/2017 - ...)
1230	0301 2321 00	2	PLAIN WASHER	(17/10/2017 - ...)
1240	0211 1246 03	4	HEXAGON BOLT	(19/04/2018 - ...)
1240	0147 1246 03	6	HEXAGON BOLT	(17/10/2017 - 18/04/2018)
1250	~~1622 9961 01~~	2	CABLE	(17/10/2017 - 10/03/2019)
	Substituted by:	1622 0663 01 - CABLE TEMP.SENSOR (quantity: 1)		
1250	1622 9961 18	2	CABLE	(11/03/2019 - ...)
1260	1649 8004 31	1	HOSE	(17/10/2017 - ...)
1270	1649 8004 32	1	HOSE	(17/10/2017 - ...)
1280		1	THERMOSTATIC VALVE 75°C	(17/10/2017 - ...)
	Service kits:	2901 1618 00 - THERMOSTATIC VALVE KIT 75DEGREE C		
1290	1622 5507 82	1	THERMOSTAT 60°C	(17/10/2017 - ...)
1330	0346 1005 19	1	PIPE CLAMP	(18/12/2017 - ...)
1500	0211 1246 03	2	SCREW	(19/04/2018 - ...)
2010	1629 0318 18	1	SUPPORT	(21/11/2017 - ...)
	• ~~1619 3843 00~~	AR	SEAL	
	Substituted by:	1619 3843 01 - SEAL (quantity: 1)		
	• ~~1619 3843 00~~	AR	SEAL	
	Substituted by:	1619 3843 01 - SEAL (quantity: 1)		
2020	1629 0318 19	1	COVER	(21/11/2017 - ...)
	• ~~1619 3843 00~~	AR	SEAL	
	Substituted by:	1619 3843 01 - SEAL (quantity: 1)		
	• ~~1619 3843 00~~	AR	SEAL	
	Substituted by:	1619 3843 01 - SEAL (quantity: 1)		
	• 1622 5529 00	1	ER LABEL	
3010	1629 0334 00	1	DECAL	(08/01/2018 - ...) OILTYP:RIF

Legend:
IDRY:N - Integrated dryer:No
OILTYP:RIF - Oil type:Roto inject fluid oil

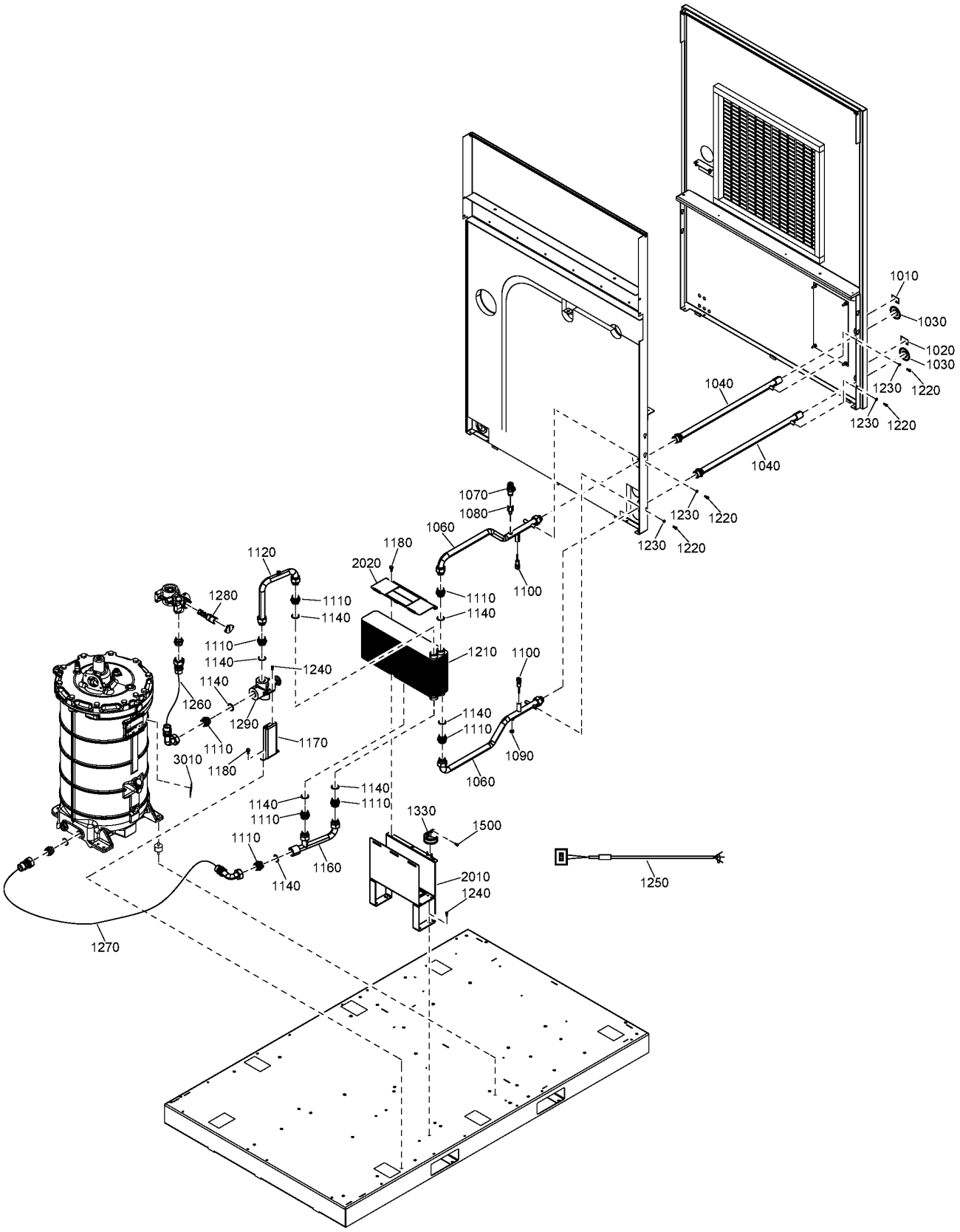
1010
1030
1020
1030
1230
1220
1230
1220
1040
1040
1230
1220
1230
1220
1070
1080
1060
1180
2020
1100
1120
1280
1110
1140
1110
1140
1210
1100
1110
1140
1240
1140
1260
1290
1140
1110
1090
1170
1110
1180
3010
1060
1140
1110
1140
1110
1330
1500
1110
1160
1140
2010
1240
1250
1270

Ref	Part Number	Qty	Name	Validity
	8092 3759 41	1	STANDARD OPTION - ENERGY RECOVERY	
1010	1079 9913 79	1	STICKER	(17/10/2017 - ...)
1020	1079 9913 69	1	STICKER	(17/10/2017 - ...)
1030	1631 0505 00	2	SEAL	(17/10/2017 - ...)
1040	1649 8003 78	2	PIPE	(17/10/2017 - ...)
1060	1649 8003 68	2	PIPE	(17/10/2017 - ...)
1070	1625 2046 00	1	RELIEF VALVE	(17/10/2017 - ...)
1080	0605 8350 79	1	BUSHING	(17/10/2017 - ...)
1090	0686 3718 24	1	PLUG	(17/10/2017 - ...)
1100	1089 0574 70	2	THERMOMETER PT1000	(19/04/2018 - ...)
1100	1089 0708 12	2	THERMOMETER PT1000	(17/10/2017 - 18/04/2018)
1110	1649 8004 27	8	NIPPLE	(18/12/2017 - ...)
1120	1649 8003 88	1	PIPE	(17/10/2017 - ...)
1140	0663 3130 00	8	O-RING	(17/10/2017 - ...)
1160	1649 8003 87	1	PIPE	(17/10/2017 - ...)
1170	1649 8003 89	1	BRACKET	(17/10/2017 - ...)
1180	0147 1963 08	7	HEXAGON BOLT	(18/12/2017 - ...)
1210	1622 5520 00	1	HEAT EXCHANGER	(17/10/2017 - ...)
1220	0211 1246 03	4	SCREW	(17/10/2017 - ...)
1230	0301 2321 00	4	PLAIN WASHER	(17/10/2017 - ...)
1240	0211 1246 03	4	HEXAGON BOLT	(19/04/2018 - ...)
1250	~~1622 9961 01~~	2	CABLE	(17/10/2017 - ...)
	Substituted by:	1622 0663 01 - CABLE TEMP.SENSOR (quantity: 1)		
1250	1622 9961 18	2	CABLE TEMPERATURE SENSOR	(11/03/2019 - ...)
1260	1649 8004 31	1	HOSE	(17/10/2017 - ...)
1270	1649 8004 32	1	HOSE	(17/10/2017 - ...)
1280		1	THERMOSTATIC VALVE 75°C	(17/10/2017 - ...)
	Service kits:	2901 1618 00 - THERMOSTATIC VALVE KIT 75DEGREE C		
1290	1622 5507 82	1	THERMOSTAT 60°C	(17/10/2017 - ...)
1330	0346 1005 19	1	PIPE CLAMP	(18/12/2017 - ...)
1500	0211 1246 03	2	SCREW	(19/04/2018 - ...)
2010	1629 0318 18	1	SUPPORT	(21/11/2017 - ...)
	• ~~1619 3843 00~~	AR	SEAL	
	Substituted by:	1619 3843 01 - SEAL (quantity: 1)		
	• ~~1619 3843 00~~	AR	SEAL	
	Substituted by:	1619 3843 01 - SEAL (quantity: 1)		
2020	1629 0318 19	1	COVER	(21/11/2017 - ...)
	• ~~1619 3843 00~~	1	SEAL	
	Substituted by:	1619 3843 01 - SEAL (quantity: 1)		
	• ~~1619 3843 00~~	AR	SEAL	
	Substituted by:	1619 3843 01 - SEAL (quantity: 1)		
	• 1622 5529 00	AR	ER LABEL	
3010	1629 0334 00	1	DECAL	(08/01/2018 - ...) OILTYP:RIF

Legend:
IDRY:Y - Integrated dryer:Yes
OILTYP:RIF - Oil type:Roto inject fluid oil

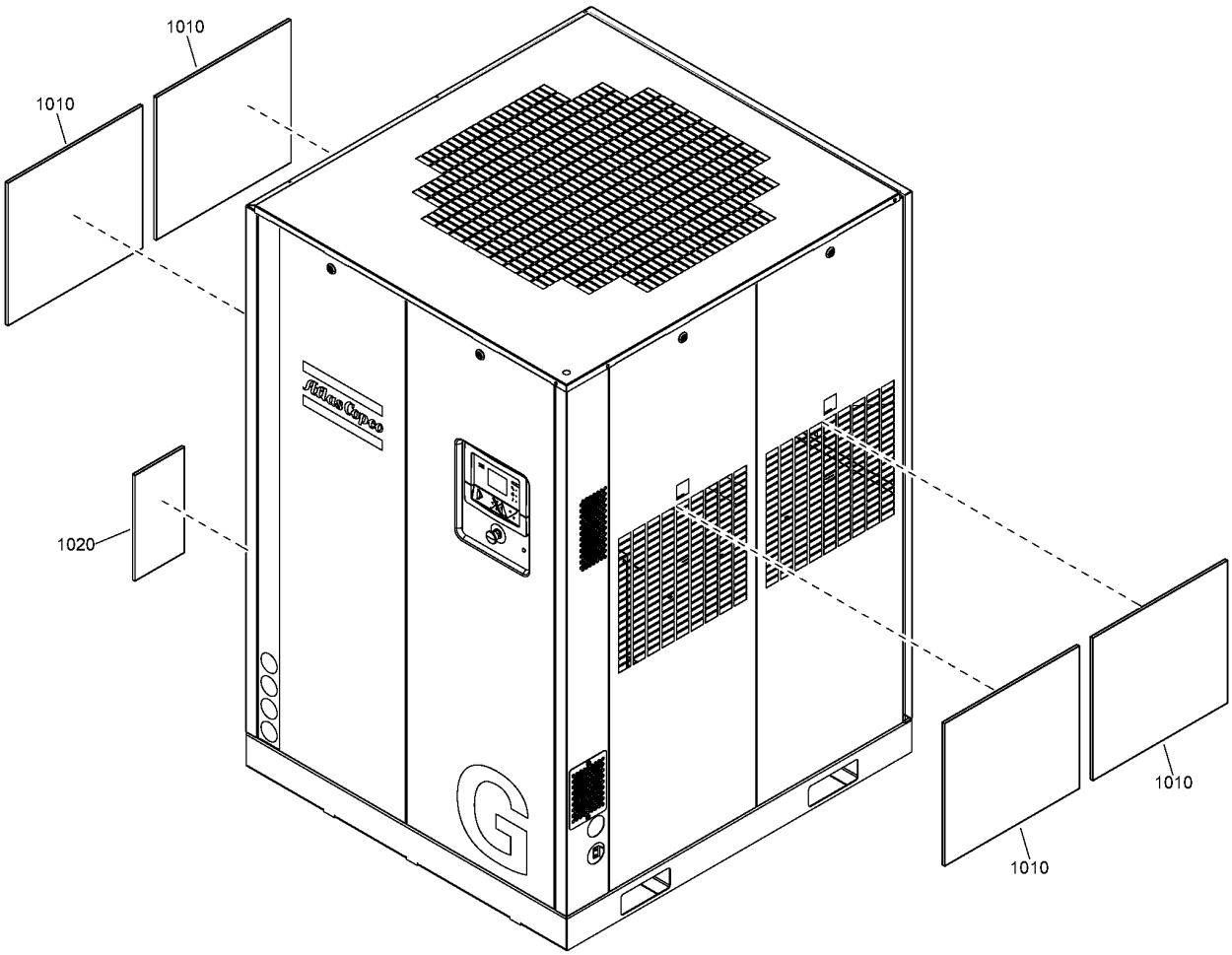
1010
1010
1020
1010
1010

26.3 - Pre-filter Pack
IDRY:N

Ref	Part Number	Qty	Name	Validity
	8092 3759 58	1	STANDARD OPTION - PRE-FILTER	
1010	1649 8004 22	4	PRE-FILTER	(17/10/2017 - ...)
1020	1649 8004 24	1	PRE-FILTER	(17/10/2017 - ...)

Legend:
IDRY:N - Integrated dryer:No

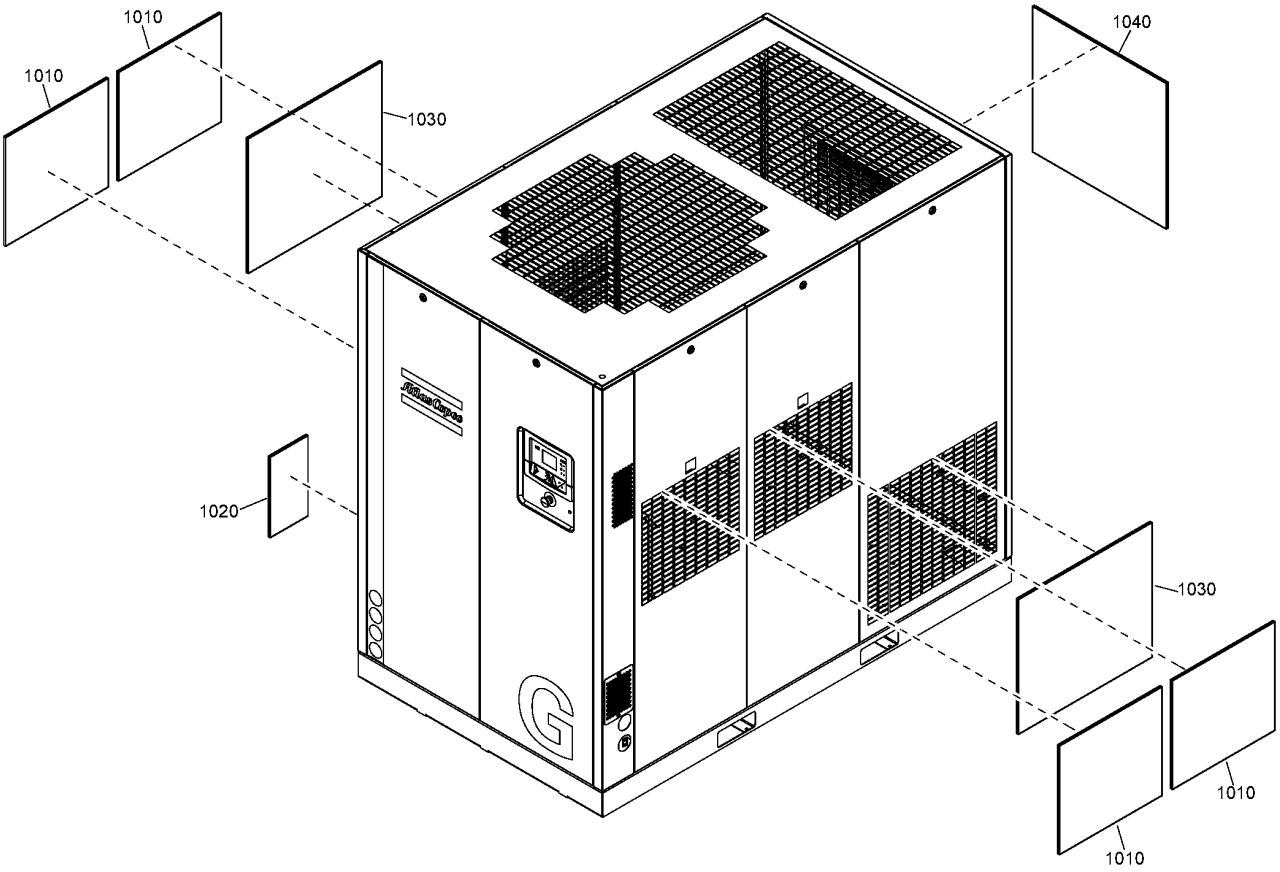
1010
1010
1030
1040
1020
1030
1010
1010

26.4 - Pre-filter Full-Feature

IDRY:Y

Ref	Part Number	Qty	Name	Validity
	8092 3759 66	1	STANDARD OPTION - PRE-FILTER	
1010	1649 8004 22	4	PRE-FILTER	(17/10/2017 - ...)
1020	1649 8004 24	1	PRE-FILTER	(17/10/2017 - ...)
1030	1649 8004 21	2	PRE-FILTER	(17/10/2017 - ...)
1040	1649 8004 23	1	PRE-FILTER	(17/10/2017 - ...)

Legend:

IDRY:Y - Integrated dryer:Yes

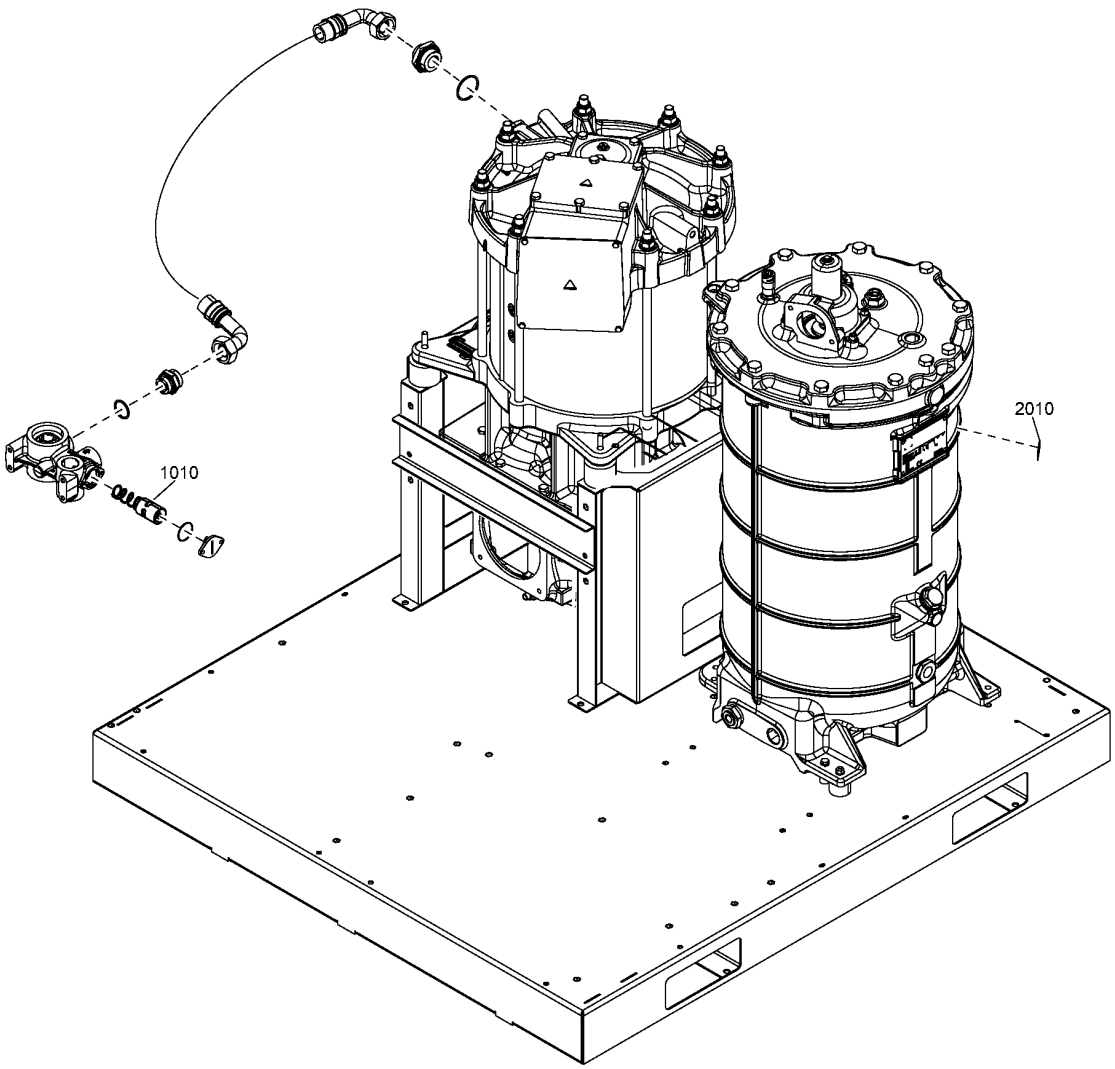
1010
2010

Ref	Part Number	Qty	Name	Validity
		1	STANDARD OPTION - TROPICAL THERMOSTAT	
	8092 3759 74	1	ROTO-INJECT FLUID	OILTYP:RIF
	8092 3759 82	1	ROTO-XTEND DUTY FLUID	OILTYP:RXD
1010		1	THERMOSTATIC VALVE 75°C	**(17/10/2017 - ...)**
	Service kits:	2901 1618 00 - THERMOSTATIC VALVE KIT 75DEGREE C		
2010	1629 0334 00	1	DECAL	**(08/01/2018 - ...)** COOL:AIR + OILTYP:RIF

Legend:

COOL:AIR - Cooling:Air cooled
OILTYP:RIF - Oil type:Roto inject fluid oil
OILTYP:RXD - Oil type:Roto-Xtend Duty Fluid

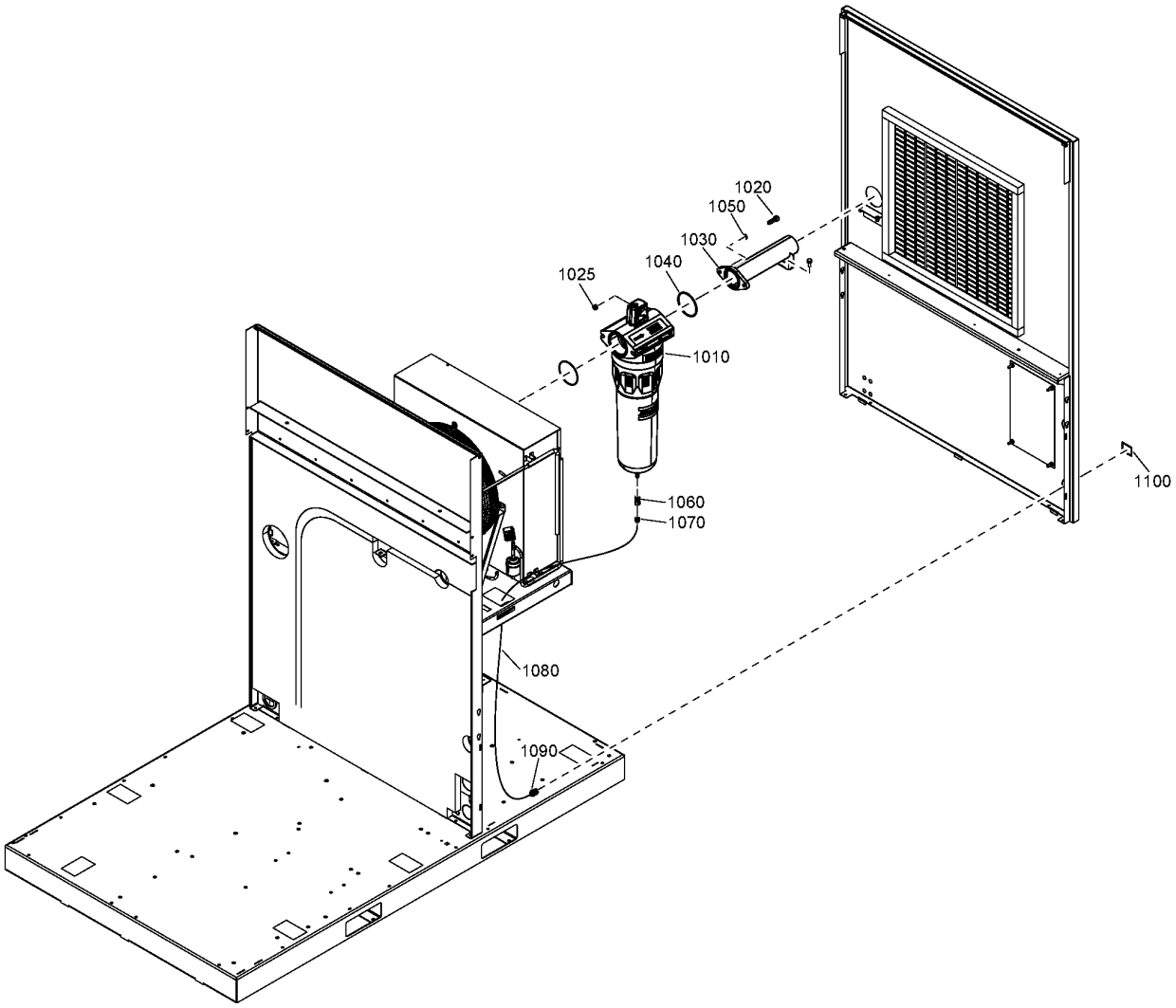
1020
1050
1030
1040
1025
1010
1060
1070
1100
1080
1090

Ref	Part Number	Qty	Name	Validity
	8092 3759 90	1	STANDARD OPTION - UD+ FILTER	
1010		1	UD 310+ FILTER	(17/10/2017 - ...)
1020	0211 1364 03	2	SCREW	(21/12/2017 - ...)
1025	0266 2111 00	2	NUT	(21/12/2017 - ...)
1030	1625 8216 00	1	PIPE	(17/10/2017 - ...)
1040	0663 2104 98	1	O-RING	(17/10/2017 - ...)
1050	0301 2344 00	2	WASHER	(21/12/2017 - ...)
1060	1617 7082 02	1	COUPLING	(17/10/2017 - ...)
1070	0583 8100 69	1	PIPE FITTING	(17/10/2017 - ...)
1080	0070 6002 05	AR	PLASTIC TUBE 5.5X8	(17/10/2017 - ...)
1090	0583 8100 70	1	PIPE FITTING	(17/10/2017 - ...)
1100	1625 2500 00	1	DECAL	(21/12/2017 - ...)

Legend:

IDRY:Y - Integrated dryer:Yes MODEL:GA75VP_16 - Model:GA 75VSD+ MODEL:GA90VP_16 - Model:GA 90VSD+

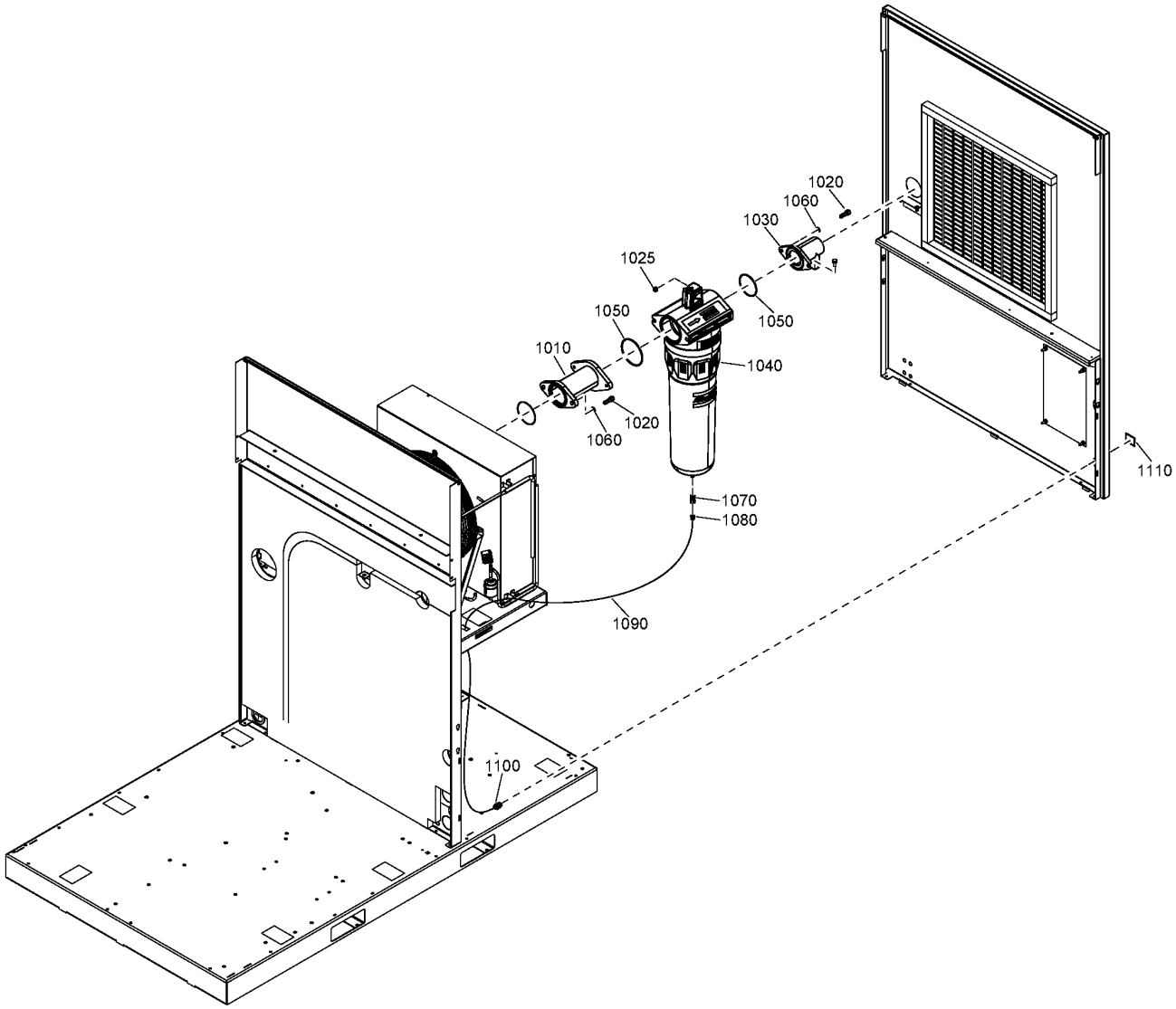
1020
1060
1030
1025
1050
1050
1010
1040
1020
1060
1110
1070
1080
1090
1100

Ref	Part Number	Qty	Name	Validity
	8092 3760 06	1	STANDARD OPTION - UD+ FILTER	
1010	1649 8003 76	1	PIPE	(17/10/2017 - ...)
1020	0211 1364 03	4	SCREW	(21/12/2017 - ...)
1025	0266 2111 00	2	NUT	(21/12/2017 - ...)
1030	1649 8003 77	1	PIPE	(17/10/2017 - ...)
1040		1	UD 425+ FILTER	(17/10/2017 - ...)
1050	0663 7143 00	2	O-RING	(17/10/2017 - ...)
1060	0301 2344 00	2	WASHER	(21/12/2017 - ...)
1060	0301 2344 00	6	PLAIN WASHER	(17/10/2017 - ...)
1070	1617 7082 02	1	COUPLING	(17/10/2017 - ...)
1080	0583 8100 69	1	PIPE FITTING	(17/10/2017 - ...)
1090	0070 6002 05	AR	PLASTIC TUBE 5.5X8	(17/10/2017 - ...)
1100	0583 8100 70	1	PIPE FITTING	(17/10/2017 - ...)
1110	1625 2500 00	1	DECAL	(21/12/2017 - ...)

Legend:
IDRY:Y - Integrated dryer:Yes
MODEL:GA110VP_16 - Model:GA 110VSD+

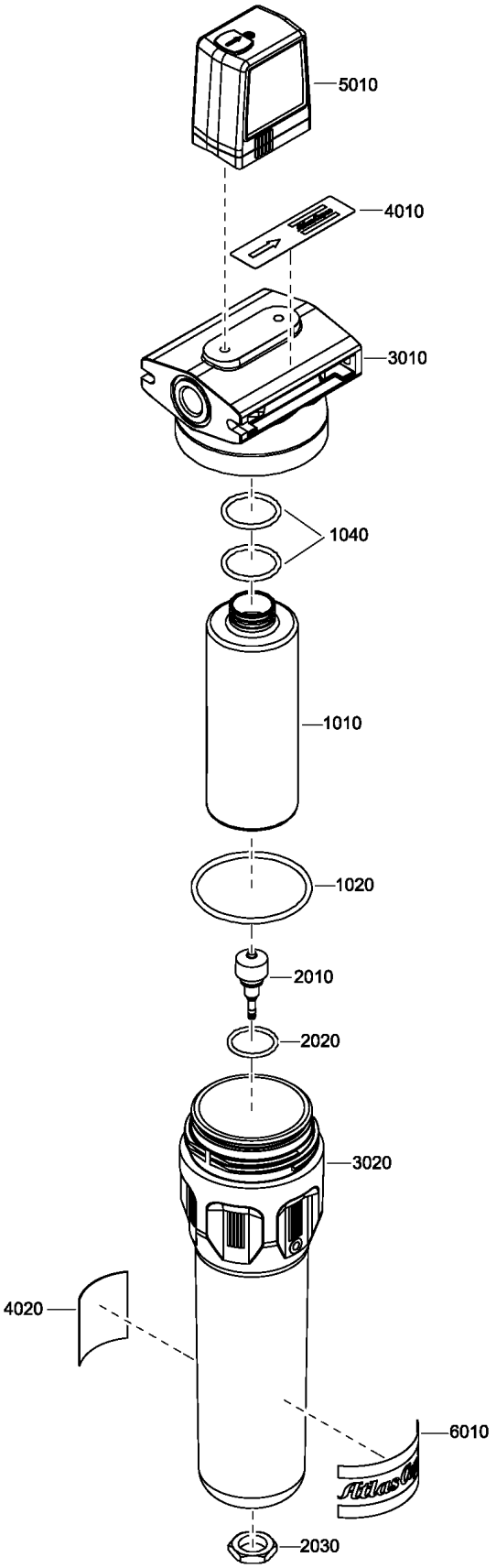
5010
4010
3010
1040
1010
1020
2010
2020
3020
4020
6010
2030

Ref	Part Number	Qty	Name	Validity
	8102 2977 62	1	FILTER UD310+	
	• ~~2901 2072 09~~	1	ELEMENT KIT	
	Substituted by:	2901 3004 10 - FILTER KIT UD 310+ (quantity: 1)		
1010	•• -	1	FILTER ELEMENT	
1020	•• 0663 2111 60	1	O-RING	
1040	•• 0663 2116 69	2	O-RING	
	• 2901 0563 00	1	DRAIN VALVE KIT	
2010	•• -	1	DRAIN VALVE	
2020	•• 0663 2111 29	1	O-RING 18X3.5	
2030	•• -	1	NUT	
3010	• -	1	HEAD	
3020	• -	1	BOWL	
4010	• 1629 0267 00	1	DECAL HEAD	
4020	• 1629 0266 06	1	DECAL BOWL	
5010	• ~~1629 0298 04~~	1	DIFFERENTIAL PRESSURE GAUGE	
	Substituted by:	1624 1172 00 - DIFF. PRESS. GAUGE (quantity: 1)		
6010	• 0690 1104 01	1	HOUSE MARK	

Legend:

MODEL:GA75VP_16 - Model:GA 75VSD+ MODEL:GA90VP_16 - Model:GA 90VSD+

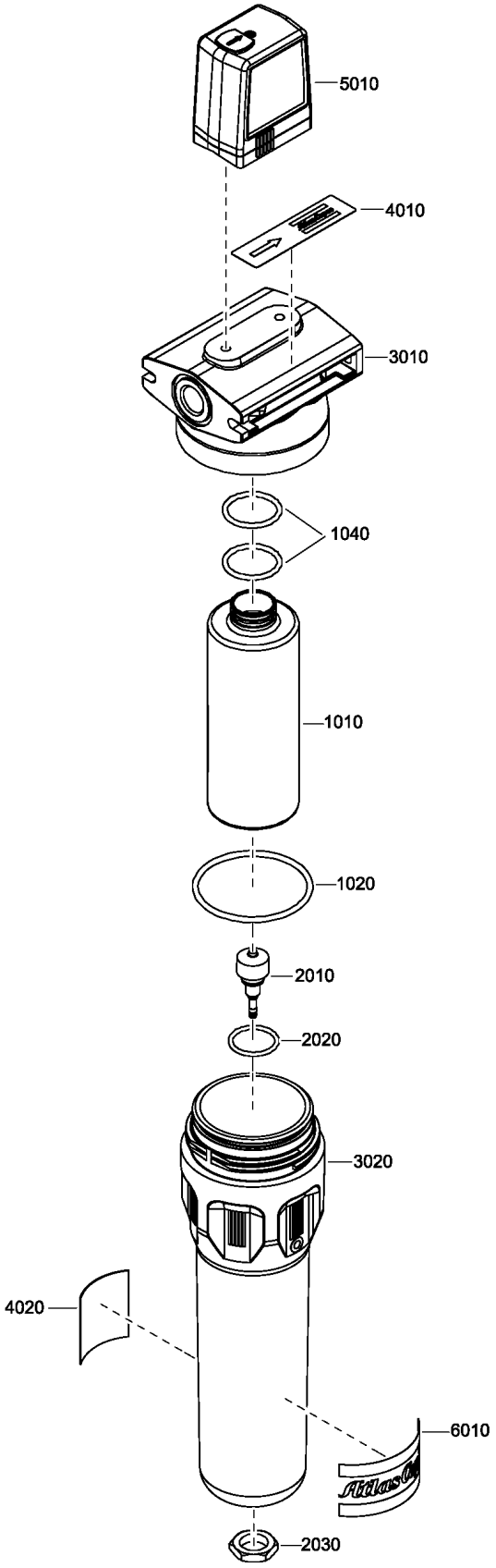
5010
4010
3010
1040
1010
1020
2010
2020
3020
4020
6010
2030

Ref	Part Number	Qty	Name	Validity
	8102 2977 70	1	FILTER UD425+	
	• ~~2901 2072 10~~	1	ELEMENT KIT	
	Substituted by:	2901 3004 11 - FILTER KIT UD 425+ (quantity: 1)		
1010	•• -	1	FILTER ELEMENT	
1020	•• 0663 2112 11	1	O-RING	
1040	•• 0663 2112 71	2	O-RING 72.7X2.62	
	• 2901 0563 00	1	DRAIN VALVE KIT	
2010	•• -	1	AUTOMATIC DRAIN	
2020	•• 0663 2111 29	1	O-RING 18X3.5	
2030	•• -	1	NUT	
3010	• -	1	HEAD	
3020	• -	1	BOWL	
4010	• 1629 0267 00	1	DECAL HEAD	
4020	• 1629 0266 07	1	DECAL BOWL	
5010	• ~~1629 0298 04~~	1	DIFFERENTIAL PRESSURE GAUGE	
	Substituted by:	1624 1172 00 - DIFF. PRESS. GAUGE (quantity: 1)		
6010	• 0690 1104 01	1	HOUSE MARK	

Legend:
MODEL:GA110VP_16 - Model:GA 110VSD+

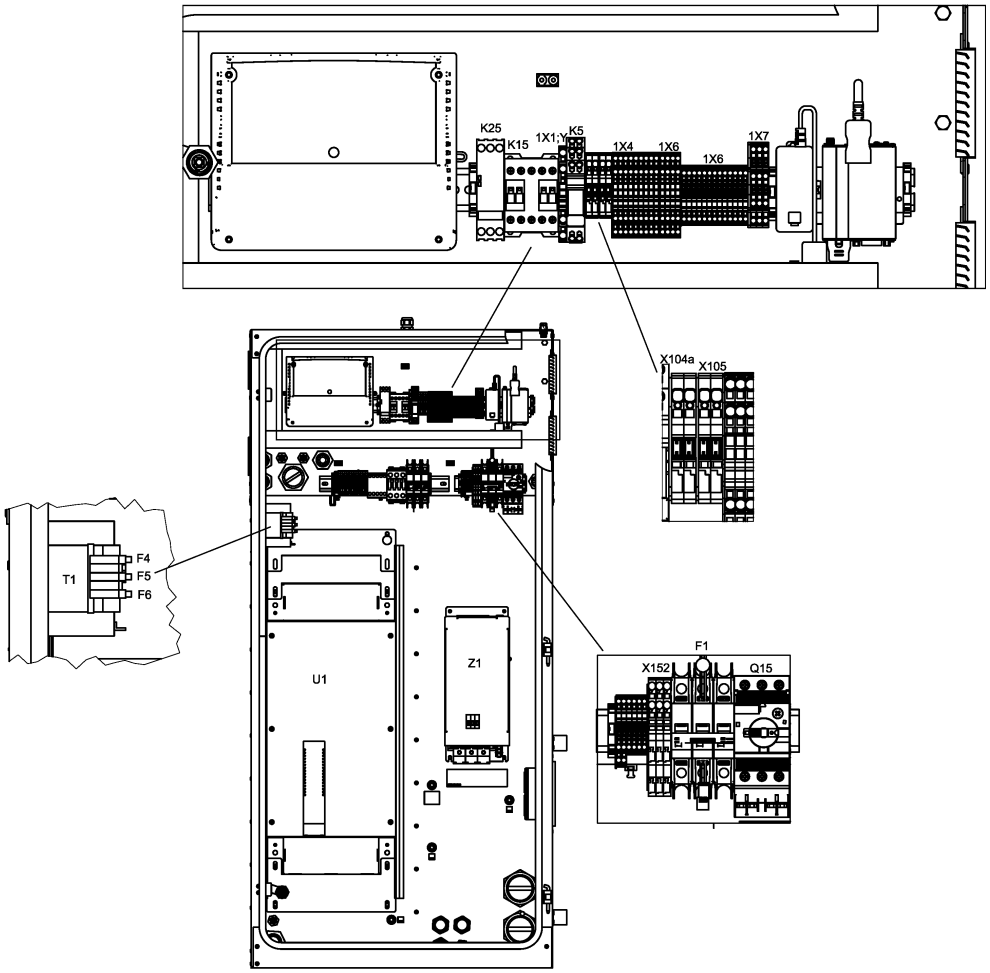
K25
K15
1X1-Y
K5
1X4
1X6
1X6
1X7
X104a
X105
T1
F4
F5
F6
U1
Z1
F1
X152
Q15

Ref	Part Number	Qty	Name	Validity	EL
	1900 2202 04	1	CUBICLE	(17/10/2017 - ...)	
	9820 3000 21	1	CUBICLE LAYOUT	(17/10/2017 - ...)	-
	9820 3000 22	1	SERVICE DIAGRAM	(17/10/2017 - ...)	-
	1622 3798 70	1	WIRE HARNESS COMM CABLE	(17/10/2017 - ...)	-
	1622 5099 04	1	DI CHANE CABLE (1400MM)	(17/10/2017 - ...)	
	Electrical legend:	Comm Cable Loose supply			
	1649 8001 22	1	CUBICLE	(17/10/2017 - ...)	-
•	1202 6584 02	AR	SEAL	(17/10/2017 - 11/12/2018)	-
	1649 8001 32	1	PLATE NEOS "D"	(17/10/2017 - ...)	-
	1649 8003 85	1	MOUNTING PLATE	(17/10/2017 - ...)	-
	1649 8002 39	1	WIRE HARNESS	(17/10/2017 - ...)	-
	1649 8002 40	1	WIRE HARNESS	(17/10/2017 - ...)	-
	1649 8002 72	1	CABLE POWER	(17/10/2017 - ...)	
	Electrical legend:	Full feature (FF) Drain			
	1649 8002 73	1	WIRE HARNESS	(17/10/2017 - ...)	
	Electrical legend:	Pack Drain + Air filter switch			
	1649 8002 75	1	WIRE HARNESS	(17/10/2017 - ...)	
	Electrical legend:	Relative Humidity sensor			
	1649 8001 45	3	MOTOR CABLE	(17/10/2017 - ...)	-
	1649 8001 48	1	MOTOR CABLE	(17/10/2017 - ...)	-
		1	DATA LABEL	(02/02/2018 - 11/12/2018)	-
		1	DATA LABEL	(17/10/2017 - 01/02/2018)	-
	1079 9901 68	1	WARNING LABEL	(17/10/2017 - ...)	-
	1900 5350 95	1	INVERTER	(17/10/2017 - ...)	U1
	1631 2079 00	1	NANOPERMRING	(17/10/2017 - ...)	-
	0697 9811 17	2	PLUG	(17/10/2017 - ...)	
	Electrical legend:	Plug for transfo supply			
	0989 3700 48	2	NUT	(17/10/2017 - ...)	
	Electrical legend:	Nut for transfo supply			
	0698 5140 72	1	CABLE GLAND	(17/10/2017 - ...)	Fan
	0698 5140 71	1	CABLE GLAND	(17/10/2017 - ...)	
	Electrical legend:	Ambient sensor			
	0697 9809 20	1	LOCKNUT	(17/10/2017 - ...)	
	Electrical legend:	Ambient sensor			
	1089 9556 44	1	FAN WITH FILTER	(17/10/2017 - ...)	Cubicle fan
		4	AIR INLET W/O FILTER	(17/10/2017 - ...)	-
	Service kits:	2901 9900 95 - AIR FILTER KIT - GA 75L VSD+ 2901 9901 01 - PREVENTIVE MAINTENANCE KIT - GA 75L VSD+			
	1088 0032 09	1	CONNECTOR	(17/10/2017 - ...)	X3
	1089 9572 05	1	LINE FILTER	(17/10/2017 - ...)	Z1 for 75 kw
	Electrical legend:	Z1 for 75 kw			
	1089 9562 04	1	STRAP	(17/10/2017 - ...)	HF-screen
	1089 9514 56	1	TRANSFORMER	(17/10/2017 - ...)	T1
	1089 9522 26	1	CIRCUIT BREAKER	(17/10/2017 - ...)	F1
	1089 9513 41	1	PUSH BUTTON	(17/10/2017 - ...)	S3
	1089 9513 28	1	HOLDER	(17/10/2017 - ...)	S3
	~~1089 9513 30~~	4	CONTACTOR	(17/10/2017 - ...)	S3
	Substituted by:	1089 9513 04 - CONTACT BLOCK (quantity: 1)			
	1088 0031 02	1	CONNECTOR 2-POLE	(17/10/2017 - ...)	
	Electrical legend:	X153 (Smartbox)			
	1088 0039 07	3	TERMINAL	(17/10/2017 - ...)	X152
	1088 0039 05	1	PLATE	(17/10/2017 - ...)	X152
	1088 0039 26	1	CONNECTOR	(17/10/2017 - ...)	
	Electrical legend:	X152 (remove coding pin 1,3)			
	1088 0037 99	4	PIN	(17/10/2017 - ...)	X152:1; 3

Legend:

FREQ:60HZ - Frequency:60 Hz
MOVOL:200V - Supply voltage:200 V
IDRY:Y - Integrated dryer:Yes
MOVOL:380V - Supply voltage:380 V
MODEL:GA75VP_16 - Model:GA 75VSD+

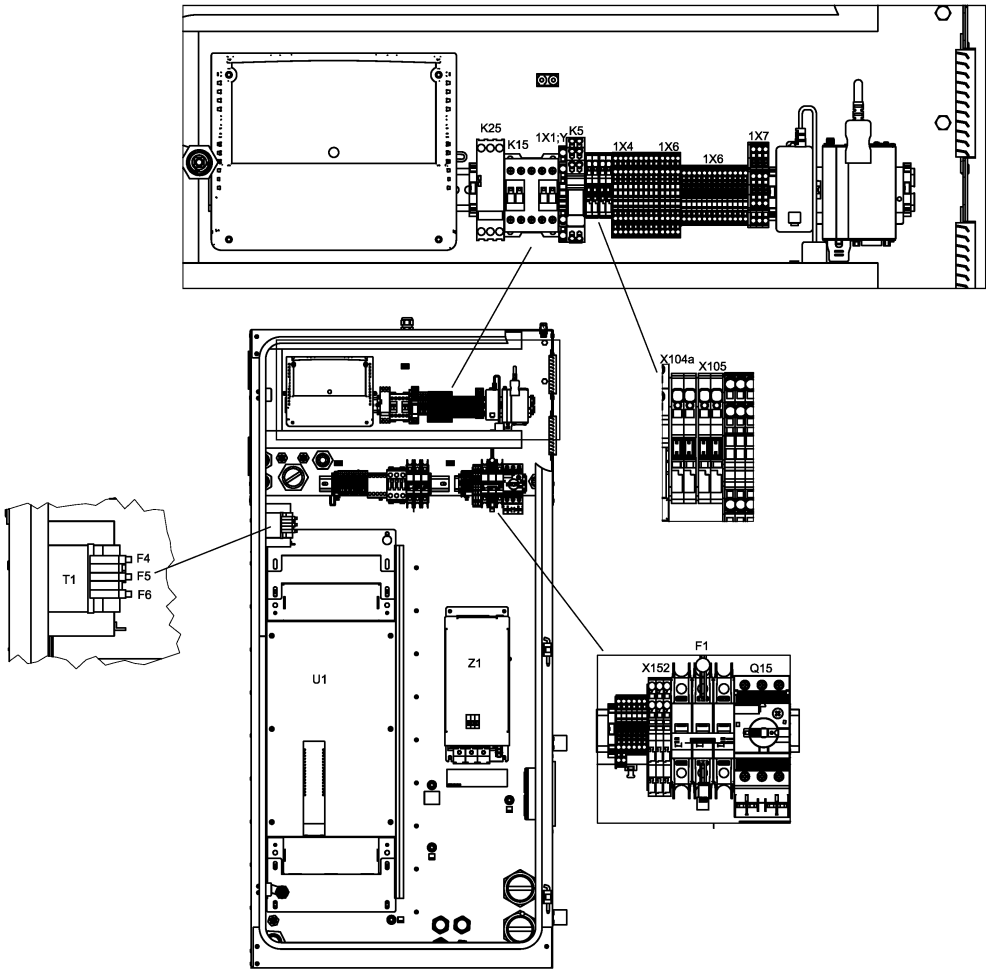
K25
K15
1X1-Y
K5
1X4
1X6
1X6
1X7
X104a
X105
T1
F4
F5
F6
U1
Z1
F1
X152
Q15

Ref	Part Number	Qty	Name	Validity	EL
	~~1088 0031 81~~	7	END STOP BRACKET	(17/10/2017 - ...)	
	Electrical legend:	Connector/terminal rail			
	Substituted by:	1089 0577 82 - END RETAINER (quantity: 1)			
	1088 0039 38	2	TERMINAL	(17/10/2017 - ...)	1X11:2,5
	1088 0039 40	1	PLATE	(17/10/2017 - ...)	1X11
	1088 0039 34	4	TERMINAL	(17/10/2017 - ...)	
	Electrical legend:	1X11:30,301,34			
	1088 0039 35	1	PLATE	(17/10/2017 - ...)	1X11
	1088 0039 04	2	TERMINAL	(17/10/2017 - ...)	X104a
	1088 0037 99	2	PIN	(17/10/2017 - ...)	X104a/X105
	1088 0039 02	1	PLATE	(17/10/2017 - ...)	X104a
	1088 0039 04	2	TERMINAL	(17/10/2017 - ...)	
	1088 0039 02	1	PLATE	(17/10/2017 - ...)	
	1088 0039 34	13	TERMINAL	(17/10/2017 - ...)	1X6
	1088 0037 69	3	CONNECTOR	(17/10/2017 - ...)	1X7
	1088 0039 35	1	PLATE	(17/10/2017 - ...)	1X6
	1088 0040 37	1	END PLATE	(17/10/2017 - ...)	1X7
	1088 0039 36	9	TERMINAL	(17/10/2017 - ...)	1X4
	1088 0039 36	4	TERMINAL	(17/10/2017 - ...)	1X6
	1088 0039 37	1	END PLATE	(17/10/2017 - ...)	1X4
	1088 0039 37	1	END PLATE	(17/10/2017 - ...)	1X6
	1088 0039 37	1	END PLATE	(17/10/2017 - ...)	1X1:Y/D
	1088 0037 81	1	CONNECTOR	(17/10/2017 - ...)	2X27
	1088 0037 80	1	CONNECTOR	(17/10/2017 - ...)	2X28
	1088 0031 32	1	CONNECTOR	(17/10/2017 - ...)	2X30
	1088 0031 26	1	CONNECTOR 6-POLE	(17/10/2017 - ...)	2X31
	~~1089 9664 06~~	1	SWITCH	(17/10/2017 - ...)	Q15
	Substituted by:	1089 9551 97 - AUX.CONTACT CIRCUIT BREAKER (quantity: 1)			
	1089 9551 18	1	CIRCUIT BREAK.	(17/10/2017 - ...)	Q15
	1088 0038 26	1	TERMINAL	(17/10/2017 - ...)	1X1:Y/D
	1089 9602 79	1	CONTACTOR 110 V	(17/10/2017 - ...)	K15
	1089 9461 26	1	PHASE SEQUENCE RELAY	(17/10/2017 - ...)	K25
	1088 0032 17	1	RELAY 115 VAC	(17/10/2017 - ...)	K5
	0991 8011 21	AR	CABLE TRAY	(17/10/2017 - ...)	L=1384mm
	1900 2203 02	1	DRYER RAIL	(17/10/2017 - ...)	
	Electrical legend:	Without trafo on dryer			
	1088 0031 13	1	CONNECTOR 13-POLE	(17/10/2017 - ...)	1X30
	1088 0037 82	1	CONNECTOR	(17/10/2017 - ...)	3X34
	0697 9811 13	1	PLUG M25	(17/10/2017 - ...)	
	Electrical legend:	Energy recovery			
	0989 3700 44	1	LOCKNUT	(17/10/2017 - ...)	
	Electrical legend:	Energy recovery			
	0697 9811 12	1	PLUG	(17/10/2017 - ...)	
	Electrical legend:	Control circuit of T10			
	0989 3700 43	1	NUT	(17/10/2017 - ...)	
	Electrical legend:	Control circuit of T10			

Legend:

FREQ:60HZ - Frequency:60 Hz
IDRY:Y - Integrated dryer:Yes
MODEL:GA75VP_16 - Model:GA 75VSD+
MOVOL:200V - Supply voltage:200 V
MOVOL:380V - Supply voltage:380 V

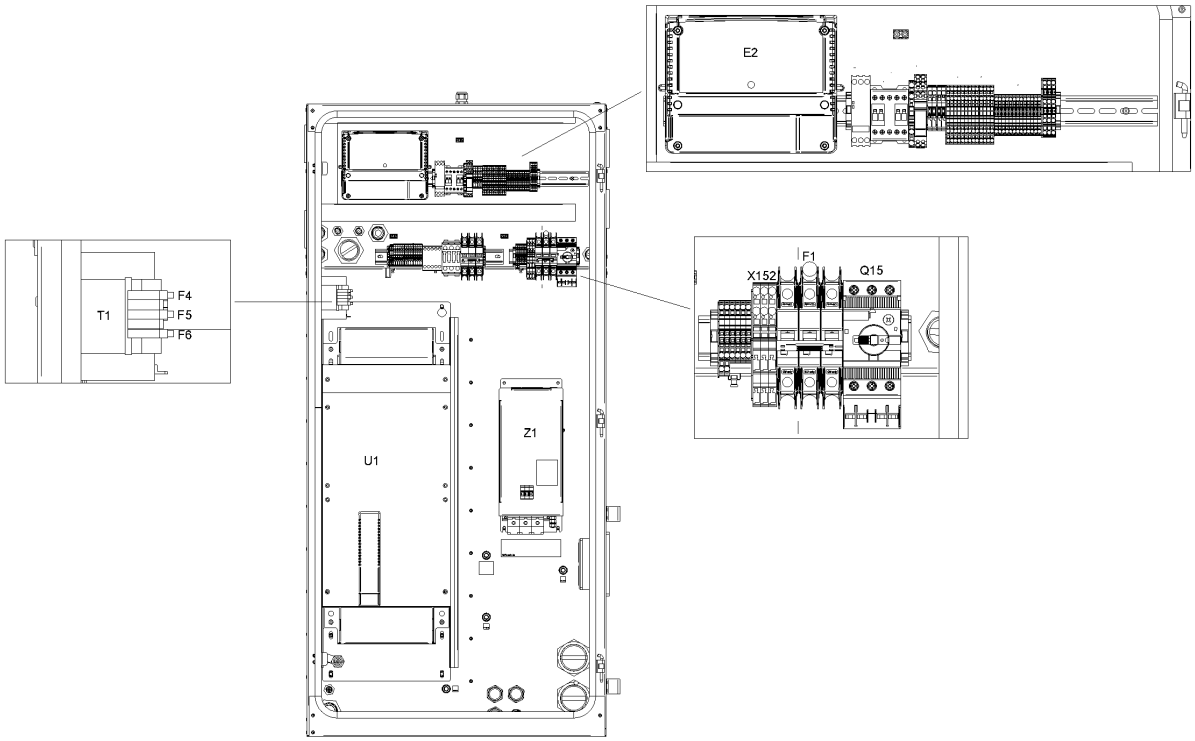
E2
T1
F4
F5
F6
X152
F1
Q15
U1
Z1

26.11 - IT Ancillaries GA 75L VSD+ - 200V-380V/60Hz - Full-Feature (12/12/2018 - 27/11/2019)

(MOVOL:200V , MOVOL:380V) + FREQ:60HZ + IDRY:Y + MODEL:GA75VP_16

Ref	Part Number	Qty	Name	Validity	EL
	1900 2202 24	1	CUBICLE	(12/12/2018 - ...)	
	9820 3000 31	1	ASSEMBLY DRAWING	(12/12/2018 - 27/11/2019)	AD
	9820 3000 27	1	SERVICE DIAGRAM	(12/12/2018 - 27/11/2019)	SD
	1622 3798 72	1	WIRE HARNESS	(12/12/2018 - 27/11/2019)	Comm Cable
	1622 5099 04	1	DI CHANE CABLE (1400MM)	(12/12/2018 - 27/11/2019)	
	Electrical legend:	Comm Cable Loose supply			
	1649 8001 22	1	CUBICLE	(12/12/2018 - 27/11/2019)	MSA
	1649 8001 32	1	PLATE NEOS "D"	(12/12/2018 - 27/11/2019)	
	Electrical legend:	Mounting plate			
	1649 8003 85	1	MOUNTING PLATE	(12/12/2018 - 27/11/2019)	
	Electrical legend:	Mounting plate			
	1649 8002 39	1	WIRE HARNESS	(12/12/2018 - 27/11/2019)	WH
	1649 8002 40	1	WIRE HARNESS	(12/12/2018 - 27/11/2019)	WH
	1649 8002 72	1	CABLE POWER	(12/12/2018 - 27/11/2019)	
	Electrical legend:	Full feature (FF) Drain			
	1649 8002 73	1	WIRE HARNESS	(12/12/2018 - 27/11/2019)	
	Electrical legend:	Pack Drain + Air filter switch			
	1649 8002 75	1	WIRE HARNESS	(12/12/2018 - 27/11/2019)	
	Electrical legend:	Relative Humidity sensor			
	1649 8001 45	3	MOTOR CABLE	(12/12/2018 - 27/11/2019)	
	Electrical legend:	Motor conduit			
	1649 8001 48	1	MOTOR CABLE	(12/12/2018 - 27/11/2019)	
	Electrical legend:	Motor conduit			
		1	DATALABEL	(12/12/2018 - 27/11/2019)	Label
	1079 9901 68	1	WARNING LABEL	(12/12/2018 - 27/11/2019)	Label
	1649 8005 00	-	LABEL	(12/12/2018 - 27/11/2019)	Label
	1900 5350 95	1	INVERTER	(12/12/2018 - 27/11/2019)	U1
	1631 2079 00	1	NANOPERMRING	(12/12/2018 - 27/11/2019)	
	Electrical legend:	Nanoperm ring			
	0697 9811 17	2	PLUG	(12/12/2018 - 27/11/2019)	
	Electrical legend:	Plug for transfo supply			
	0989 3700 48	2	NUT	(12/12/2018 - 27/11/2019)	
	Electrical legend:	Nut for transfo supply			
	0698 5140 72	1	CABLE GLAND	(12/12/2018 - 27/11/2019)	Fan
	0698 5140 71	1	CABLE GLAND	(12/12/2018 - 27/11/2019)	
	Electrical legend:	Ambient sensor			
	0697 9809 20	1	LOCKNUT	(12/12/2018 - 27/11/2019)	
	Electrical legend:	Ambient sensor			
	1089 9556 44	1	FAN WITH FILTER	(12/12/2018 - 27/11/2019)	Cubicle fan
	1089 9556 72	4	AIR INLET WITHOUT FILTER	(12/12/2018 - 27/11/2019)	Filter grid
	1088 0032 09	1	CONNECTOR	(12/12/2018 - 27/11/2019)	X3
	1089 9572 05	1	LINE FILTER	(12/12/2018 - 27/11/2019)	Z1 for 75 kw
	Electrical legend:	Z1 for 75 kw			
	1089 9562 04	1	STRAP	(12/12/2018 - 27/11/2019)	HF-screen
	1089 9514 56	1	TRANSFORMER	(12/12/2018 - 27/11/2019)	T1
	1089 9522 26	1	CIRCUIT BREAKER	(12/12/2018 - 27/11/2019)	F1
	1089 9513 41	1	PUSH BUTTON	(12/12/2018 - 27/11/2019)	S3
	1089 9513 28	1	HOLDER	(12/12/2018 - 27/11/2019)	S3
	~~1089 9513 30~~	4	CONTACTOR	(12/12/2018 - 27/11/2019)	S3
	Substituted by:	1089 9513 04 - CONTACT BLOCK (quantity: 1)			
	1088 0031 02	1	CONNECTOR 2-POLE	(12/12/2018 - 17/02/2019)	
	1088 0039 07	3	TERMINAL	(12/12/2018 - 27/11/2019)	X152
	1088 0039 05	1	PLATE	(12/12/2018 - 27/11/2019)	X152
	1088 0039 26	1	CONNECTOR	(12/12/2018 - 27/11/2019)	
	Electrical legend:	X152 (remove coding pin 1,3)			
	1088 0037 99	4	PIN	(12/12/2018 - 27/11/2019)	X152:1; 3

Legend:

FREQ:60HZ - Frequency:60 Hz
IDRY:Y - Integrated dryer:Yes
MODEL:GA75VP_16 - Model:GA 75VSD+
MOVOL:200V - Supply voltage:200 V
MOVOL:380V - Supply voltage:380 V

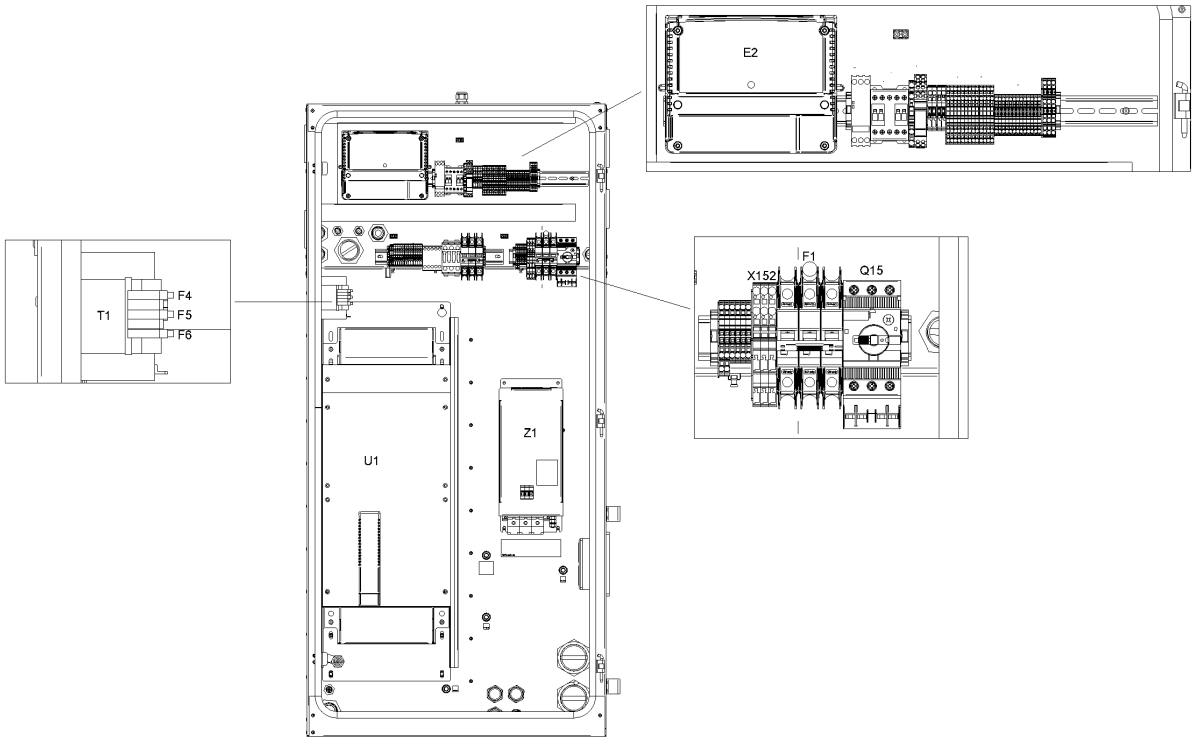
E2
T1
F4
F5
F6
X152
F1
Q15
U1
Z1

Ref	Part Number	Qty	Name	Validity	EL
	~~1088 0031 81~~	7	END STOP BRACKET 6MM	(12/12/2018 - 27/11/2019)	
	Electrical legend:	Connector/terminal rail			
	Substituted by:	1089 0577 82 - END RETAINER (quantity: 1)			
	1088 0039 38	2	TERMINAL	(12/12/2018 - 27/11/2019)	1X11:2,5
	1088 0039 40	1	PLATE	(12/12/2018 - 27/11/2019)	1X11
	1088 0039 34	4	TERMINAL	(12/12/2018 - 27/11/2019)	
	Electrical legend:	1X11:30,301,34			
	1088 0039 35	1	PLATE	(12/12/2018 - 27/11/2019)	1X11
	1088 0039 04	2	TERMINAL	(12/12/2018 - 27/11/2019)	X104a
	1088 0037 99	2	PIN	(12/12/2018 - 27/11/2019)	X104a/X105
	1088 0039 02	1	PLATE	(12/12/2018 - 27/11/2019)	X104a
	1088 0039 07	2	TERMINAL	(12/12/2018 - 27/11/2019)	X105
	1088 0039 05	1	PLATE	(12/12/2018 - 27/11/2019)	X105
	1088 0039 34	13	TERMINAL	(12/12/2018 - 27/11/2019)	1X6
	1088 0037 69	3	CONNECTOR	(12/12/2018 - 27/11/2019)	1X7
	1088 0039 35	1	PLATE	(12/12/2018 - 27/11/2019)	1X6
	1088 0040 37	1	END PLATE	(12/12/2018 - 27/11/2019)	1X7
	1088 0039 36	9	TERMINAL	(12/12/2018 - 27/11/2019)	1X4
	1088 0039 36	4	TERMINAL	(12/12/2018 - 27/11/2019)	1X6
	1088 0039 37	1	END PLATE	(12/12/2018 - 27/11/2019)	1X4
	1088 0039 37	1	END PLATE	(12/12/2018 - 27/11/2019)	1X6
	1088 0039 37	1	END PLATE	(12/12/2018 - 27/11/2019)	1X1:Y/D
	1088 0037 81	1	CONNECTOR	(12/12/2018 - 27/11/2019)	2X27
	1088 0037 80	1	CONNECTOR	(12/12/2018 - 27/11/2019)	2X28
	1088 0031 32	1	CONNECTOR	(12/12/2018 - 27/11/2019)	2X30
	1088 0031 26	1	CONNECTOR 6-POLE	(12/12/2018 - 27/11/2019)	2X31
	~~1089 9664 06~~	1	SWITCH	(12/12/2018 - 27/11/2019)	Q15
	Substituted by:	1089 9551 97 - AUX.CONTACT CIRCUIT BREAKER (quantity: 1)			
	1089 9551 18	1	CIRCUIT BREAKER	(12/12/2018 - 27/11/2019)	Q15
	1088 0038 26	1	TERMINAL	(12/12/2018 - 27/11/2019)	1X1:Y/D
	1089 9602 79	1	CONTACTOR 110 V	(12/12/2018 - 27/11/2019)	K15
	1089 9461 26	1	PHASE SEQUENCE RELAY	(12/12/2018 - 27/11/2019)	K25
	1088 0032 17	1	RELAY 115 VAC	(12/12/2018 - 27/11/2019)	K5
	0991 8011 21	AR	CABLE TRAY	(12/12/2018 - 27/11/2019)	L=1384mm
	1900 2203 02	1	DRYER RAIL	(12/12/2018 - 27/11/2019)	
	Electrical legend:	Without trafo on dryer			
	1088 0031 13	1	CONNECTOR 13-POLE	(12/12/2018 - 27/11/2019)	1X30
	1088 0037 82	1	CONNECTOR	(12/12/2018 - 27/11/2019)	3X34
	0697 9811 13	1	PLUG	(12/12/2018 - 27/11/2019)	
	Electrical legend:	Energy recovery			
	0989 3700 44	1	LOCKNUT	(12/12/2018 - 27/11/2019)	
	Electrical legend:	Energy recovery			
	0697 9811 12	1	PLUG	(12/12/2018 - 27/11/2019)	
	Electrical legend:	Control circuit of T10			
	0989 3700 43	1	NUT	(12/12/2018 - 27/11/2019)	
	Electrical legend:	Control circuit of T10			
	0697 9811 10	1	PLUG	(12/12/2018 - 27/11/2019)	
	Electrical legend:	Plug for smartbox hole			
	0989 3700 41	1	LOCKNUT	(12/12/2018 - 27/11/2019)	
	Electrical legend:	Nut for smartbox hole			

Legend:

FREQ:60HZ - Frequency:60 Hz
IDRY:Y - Integrated dryer:Yes
MODEL:GA75VP_16 - Model:GA 75VSD+
MOVOL:200V - Supply voltage:200 V
MOVOL:380V - Supply voltage:380 V

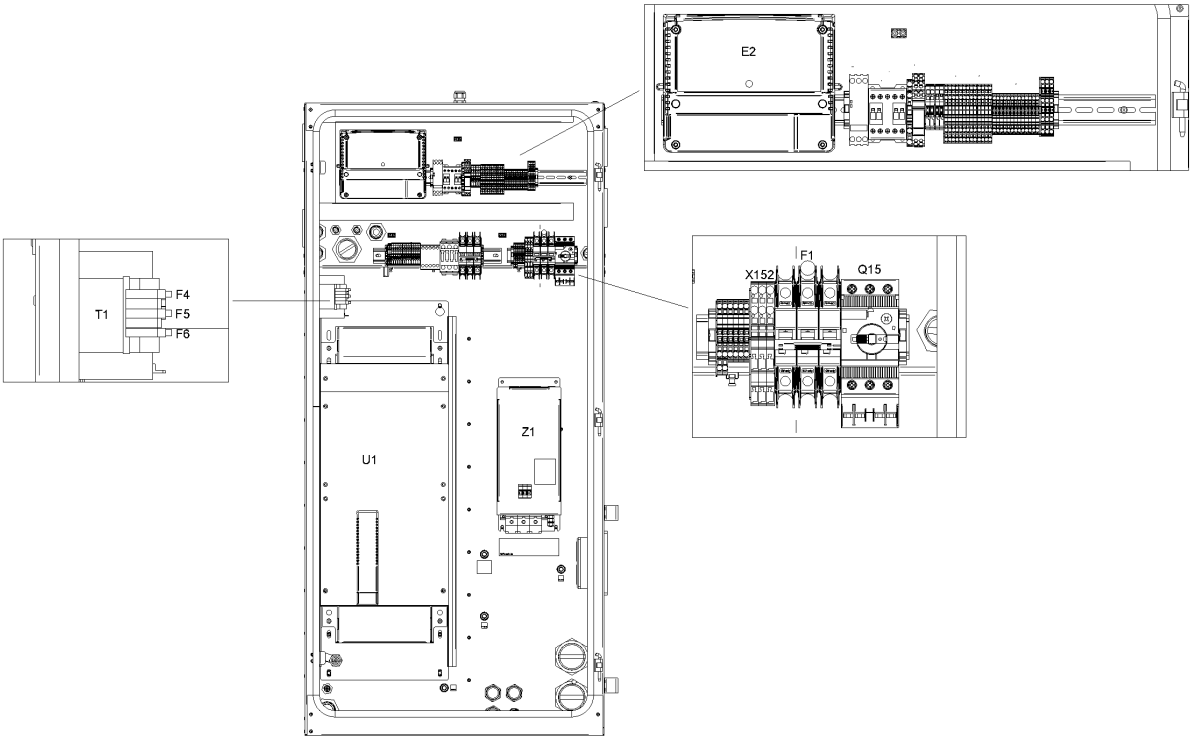
E2
T1
F4
F5
F6
X152
F1
Q15
U1
Z1

Ref	Part Number	Qty	Name	Validity	EL
	1900 2202 44	1	CUBICLE	(28/11/2019 - ...)	
	9820 3000 31	1	ASSEMBLY DRAWING	(28/11/2019 - ...)	AD
	9820 3000 27	1	SERVICE DIAGRAM	(28/11/2019 - ...)	SD
	1622 3798 72	1	WIRE HARNESS	(28/11/2019 - ...)	Comm Cable
	1622 5099 04	1	DI CHANE CABLE (1400MM)	(28/11/2019 - ...)	
	Electrical legend:	Comm Cable Loose supply			
	1649 8006 00	1	CUBICLE	(28/11/2019 - ...)	MSA
	1649 8001 32	1	PLATE NEOS "D"	(28/11/2019 - ...)	
	Electrical legend:	Mounting plate			
	1649 8003 85	1	MOUNTING PLATE	(28/11/2019 - ...)	
	Electrical legend:	Mounting plate			
	1649 8002 39	1	WIRE HARNESS	(28/11/2019 - ...)	WH
	1649 8002 40	1	WIRE HARNESS	(28/11/2019 - ...)	WH
	1649 8002 72	1	CABLE POWER	(28/11/2019 - ...)	
	Electrical legend:	Full feature (FF) Drain			
	1649 8002 73	1	WIRE HARNESS	(28/11/2019 - ...)	
	Electrical legend:	Pack Drain + Air filter switch			
	1649 8002 75	1	WIRE HARNESS	(28/11/2019 - ...)	
	Electrical legend:	Relative Humidity sensor			
	1649 8001 45	3	MOTOR CABLE	(28/11/2019 - ...)	
	Electrical legend:	Motor conduit			
	1649 8001 48	1	MOTOR CABLE	(28/11/2019 - ...)	
	Electrical legend:	Motor conduit			
	1625 3906 31	1	DATA LABEL	(28/11/2019 - ...)	Label
	1079 9901 68	1	WARNING LABEL	(28/11/2019 - ...)	Label
	1649 8005 00	0	LABEL	(28/11/2019 - ...)	Label
	1900 5350 95	1	INVERTER	(28/11/2019 - ...)	U1
	1631 2079 00	1	NANOPERMRING	(28/11/2019 - ...)	
	Electrical legend:	Nanoperm ring			
	0697 9811 17	2	PLUG	(28/11/2019 - ...)	
	Electrical legend:	Plug for transfo supply			
	0989 3700 48	2	NUT	(28/11/2019 - ...)	
	Electrical legend:	Nut for transfo supply			
	0698 5140 72	1	CABLE GLAND	(28/11/2019 - ...)	Fan
	0698 5140 71	1	CABLE GLAND	(28/11/2019 - ...)	
	Electrical legend:	Ambient sensor			
	0697 9809 20	1	LOCKNUT	(28/11/2019 - ...)	
	Electrical legend:	Ambient sensor			
	1089 9556 44	1	FAN WITH FILTER	(28/11/2019 - ...)	Cubicle fan
	1089 9556 72	4	AIR INLET WITHOUT FILTER	(28/11/2019 - ...)	Filter grid
	1088 0032 09	1	CONNECTOR	(28/11/2019 - ...)	X3
	1089 9572 05	1	LINE FILTER	(28/11/2019 - ...)	Z1 for 75 kw
	Electrical legend:	Z1 for 75 kw			
	1089 9562 04	1	STRAP	(28/11/2019 - ...)	HF-screen
	1089 9514 56	1	TRANSFORMER	(28/11/2019 - ...)	T1
	1089 9522 26	1	CIRCUIT BREAKER	(28/11/2019 - ...)	F1
	1089 9513 41	1	PUSH BUTTON	(28/11/2019 - ...)	S3
	1089 9513 28	1	HOLDER	(28/11/2019 - ...)	S3
	~~1089 9513 30~~	4	CONTACTOR	(28/11/2019 - ...)	S3
	Substituted by:	1089 9513 04 - CONTACT BLOCK (quantity: 1)			
	1088 0039 07	3	TERMINAL	(28/11/2019 - ...)	X152
	1088 0039 05	1	PLATE	(28/11/2019 - ...)	X152
	1088 0039 26	1	CONNECTOR	(28/11/2019 - ...)	
	Electrical legend:	X152 (remove coding pin 1,3)			
	1088 0037 99	4	PIN	(28/11/2019 - ...)	X152:1; 3
	~~1088 0031 81~~	7	END STOP BRACKET 6MM	(28/11/2019 - ...)	

Legend:

FREQ:60HZ - Frequency:60 Hz
IDRY:Y - Integrated dryer:Yes
MODEL:GA75VP_16 - Model:GA 75VSD+
MOVOL:200V - Supply voltage:200 V
MOVOL:380V - Supply voltage:380 V

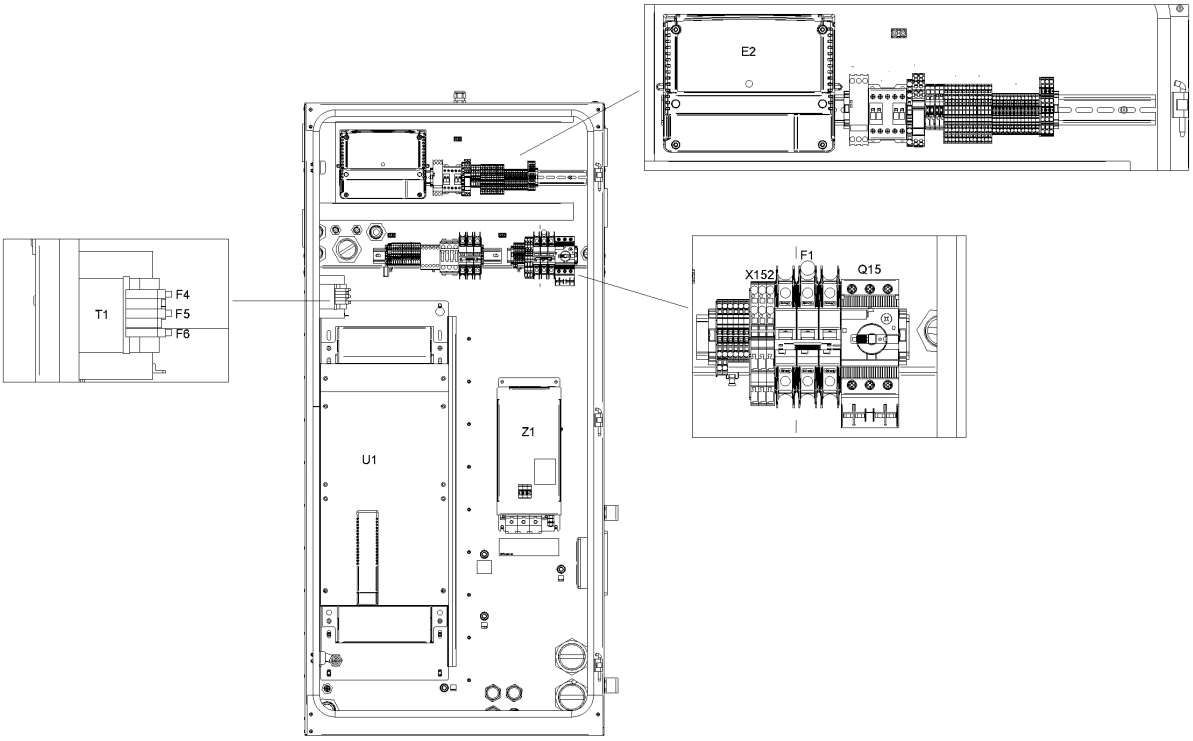
E2
T1
F4
F5
F6
X152
F1
Q15
U1
Z1

Ref	Part Number	Qty	Name	Validity	EL
	Electrical legend:	Connector/terminal rail			
	Substituted by:	1089 0577 82 - END RETAINER (quantity: 1)			
	1088 0039 38	2	TERMINAL	(28/11/2019 - ...)	1X11:2,5
	1088 0039 40	1	PLATE	(28/11/2019 - ...)	1X11
	1088 0039 34	4	TERMINAL	(28/11/2019 - ...)	
	Electrical legend:	1X11:30,301,34			
	1088 0039 35	1	PLATE	(28/11/2019 - ...)	1X11
	1088 0039 04	2	TERMINAL	(28/11/2019 - ...)	X104a
	1088 0037 99	2	PIN	(28/11/2019 - ...)	X104a/X105
	1088 0039 02	1	PLATE	(28/11/2019 - ...)	X104a
	1088 0039 07	2	TERMINAL	(28/11/2019 - ...)	X105
	1088 0039 05	1	PLATE	(28/11/2019 - ...)	X105
	1088 0039 34	13	TERMINAL	(28/11/2019 - ...)	1X6
	1088 0037 69	3	CONNECTOR	(28/11/2019 - ...)	1X7
	1088 0039 35	1	PLATE	(28/11/2019 - ...)	1X6
	1088 0040 37	1	END PLATE	(28/11/2019 - ...)	1X7
	1088 0039 36	9	TERMINAL	(28/11/2019 - ...)	1X4
	1088 0039 36	4	TERMINAL	(28/11/2019 - ...)	1X6
	1088 0039 37	1	END PLATE	(28/11/2019 - ...)	1X4
	1088 0039 37	1	END PLATE	(28/11/2019 - ...)	1X6
	1088 0039 37	1	END PLATE	(28/11/2019 - ...)	1X1:Y/D
	1088 0037 81	1	CONNECTOR	(28/11/2019 - ...)	2X27
	1088 0037 80	1	CONNECTOR	(28/11/2019 - ...)	2X28
	1088 0031 32	1	CONNECTOR	(28/11/2019 - ...)	2X30
	1088 0031 26	1	CONNECTOR 6-POLE	(28/11/2019 - ...)	2X31
	~~1089 9664 06~~	1	SWITCH	(28/11/2019 - ...)	Q15
	Substituted by:	1089 9551 97 - AUX.CONTACT CIRCUIT BREAKER (quantity: 1)			
	1089 9551 18	1	CIRCUIT BREAKER	(28/11/2019 - ...)	Q15
	1088 0038 26	1	TERMINAL	(28/11/2019 - ...)	1X1:Y/D
	1089 9602 79	1	CONTACTOR 110 V	(28/11/2019 - ...)	K15
	1089 9461 26	1	PHASE SEQUENCE RELAY	(28/11/2019 - ...)	K25
	1088 0032 17	1	RELAY 115 VAC	(28/11/2019 - ...)	K5
	0991 8011 21	AR	CABLE TRAY	(28/11/2019 - ...)	L=1384mm
	1900 2203 02	1	DRYER RAIL	(28/11/2019 - ...)	
	Electrical legend:	Without trafo on dryer			
	1088 0031 13	1	CONNECTOR 13-POLE	(28/11/2019 - ...)	1X30
	1088 0037 82	1	CONNECTOR	(28/11/2019 - ...)	3X34
	0697 9811 13	1	PLUG	(28/11/2019 - ...)	
	Electrical legend:	Energy recovery			
	0989 3700 44	1	LOCKNUT	(28/11/2019 - ...)	
	Electrical legend:	Energy recovery			
	0697 9811 12	1	PLUG	(28/11/2019 - ...)	
	Electrical legend:	Control circuit of T10			
	0989 3700 43	1	NUT	(28/11/2019 - ...)	
	Electrical legend:	Control circuit of T10			
	0697 9811 10	1	PLUG	(28/11/2019 - ...)	
	Electrical legend:	Plug for smartbox hole			
	0989 3700 41	1	LOCKNUT	(28/11/2019 - ...)	
	Electrical legend:	Nut for smartbox hole			
	1089 9556 37	1	AIR INLET WITH FILTER	(28/11/2019 - ...)	Fan Filter

Legend:

FREQ:60HZ - Frequency:60 Hz
IDRY:Y - Integrated dryer:Yes
MODEL:GA75VP_16 - Model:GA 75VSD+
MOVOL:200V - Supply voltage:200 V
MOVOL:380V - Supply voltage:380 V

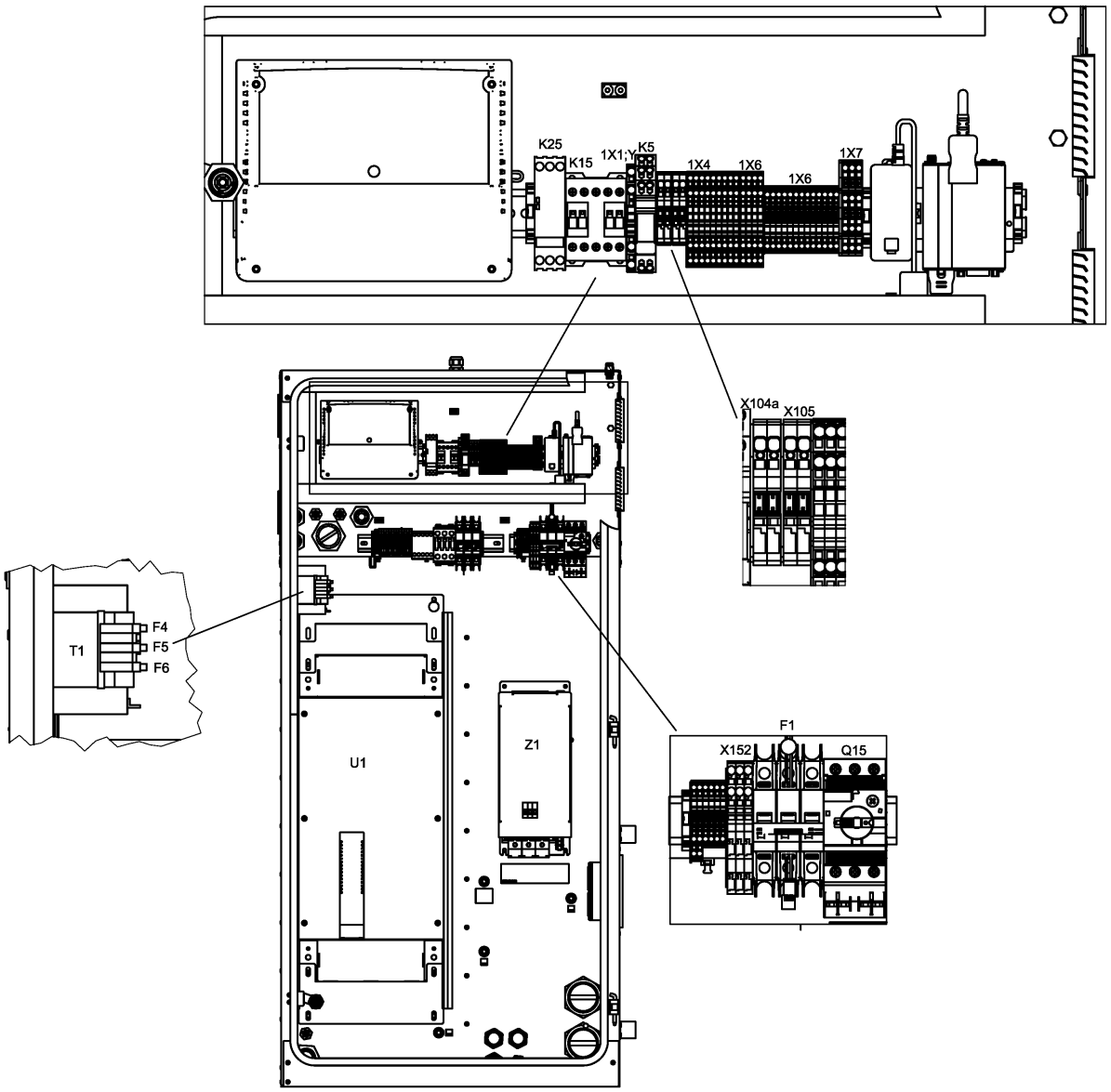
K25
K15
1X1;
K5
1X4
1X6
1X6
1X7
X104a
X105
T1
F4
F5
F6
U1
Z1
F1
X152
Q15

26.13 - IT Ancillaries GA 90 VSD+ - 200V-380V/60Hz - Full-Feature (17/10/2017 - 11/12/2018)

(MOVOL:200V , MOVOL:380V) + FREQ:60HZ + IDRY:Y + MODEL:GA90VP_16

Ref	Part Number	Qty	Name	Validity	EL
	1900 2202 10	1	CUBICLE	(17/10/2017 - 11/12/2018)	
	9820 3000 21	1	CUBICLE LAYOUT	(17/10/2017 - 11/12/2018)	AD
	9820 3000 22	1	SERVICE DIAGRAM	(17/10/2017 - 11/12/2018)	-
	1622 3798 70	1	WIRE HARNESS COMM CABLE	(17/10/2017 - 11/12/2018)	-
	1622 5099 04	1	DI CHANE CABLE (1400MM)	(17/10/2017 - 11/12/2018)	
	Electrical legend:	Comm Cable Loose supply			
	1649 8001 22	1	CUBICLE	(17/10/2017 - 11/12/2018)	-
•	1202 6584 02	AR	SEAL		-
	1649 8001 32	1	PLATE NEOS "D"	(17/10/2017 - 11/12/2018)	-
	1649 8003 85	1	MOUNTING PLATE	(17/10/2017 - 11/12/2018)	-
	1649 8002 39	1	WIRE HARNESS	(17/10/2017 - 11/12/2018)	-
	1649 8002 40	1	WIRE HARNESS	(17/10/2017 - 11/12/2018)	-
	1649 8002 72	1	CABLE POWER	(17/10/2017 - 11/12/2018)	
	Electrical legend:	Full feature (FF) Drain			
	1649 8002 73	1	WIRE HARNESS	(17/10/2017 - 11/12/2018)	
	Electrical legend:	Pack Drain + Air filter switch			
	1649 8002 75	1	WIRE HARNESS	(17/10/2017 - 11/12/2018)	
	Electrical legend:	Relative Humidity sensor			
	1649 8001 44	3	MOTOR CABLE	(17/10/2017 - 11/12/2018)	-
	1649 8001 47	1	MOTOR CABLE	(17/10/2017 - 11/12/2018)	-
		1	DATA LABEL	(02/02/2018 - 11/12/2018)	-
		1	DATA LABEL	(17/10/2017 - 01/02/2018)	-
	1079 9901 68	1	WARNING LABEL	(17/10/2017 - 11/12/2018)	-
	1900 5350 19	1	INVERTER	(17/10/2017 - 11/12/2018)	U1
	1631 2079 00	1	NANOPERMRING	(17/10/2017 - 11/12/2018)	-
	0697 9811 17	2	PLUG	(17/10/2017 - 11/12/2018)	
	Electrical legend:	Plug for transfo supply			
	0989 3700 48	2	NUT	(17/10/2017 - 11/12/2018)	
	Electrical legend:	Nut for transfo supply			
	0698 5140 72	1	CABLE GLAND	(17/10/2017 - 11/12/2018)	Fan
	0698 5140 71	1	CABLE GLAND	(17/10/2017 - 11/12/2018)	
	Electrical legend:	Ambient sensor			
	0697 9809 20	1	LOCKNUT	(17/10/2017 - 11/12/2018)	
	Electrical legend:	Ambient sensor			
	1089 9556 44	1	FAN WITH FILTER	(17/10/2017 - 11/12/2018)	Cubicle fan
		4	AIR INLET W/O FILTER	(17/10/2017 - 11/12/2018)	-
	Service kits:	2901 9901 02 - PREVENTIVE MAINTENANCE KIT - GA 90 VSD+, GA 110 VSD+ 2901 9900 96 - AIR FILTER KIT - GA 90 VSD+, GA 110 VSD+			
	1088 0032 09	1	CONNECTOR	(17/10/2017 - 11/12/2018)	X3
	1089 9572 06	1	LINE FILTER	(17/10/2017 - 11/12/2018)	Z1 for 90kw
	1089 9562 04	1	STRAP	(17/10/2017 - 11/12/2018)	HF-screen
	1089 9514 56	1	TRANSFORMER	(17/10/2017 - 11/12/2018)	T1
	1089 9522 26	1	CIRCUIT BREAKER	(17/10/2017 - 11/12/2018)	F1
	1089 9513 41	1	PUSH BUTTON	(17/10/2017 - 11/12/2018)	S3
	1089 9513 28	1	HOLDER	(17/10/2017 - 11/12/2018)	S3
	~~1089 9513 30~~	4	CONTACTOR	(17/10/2017 - 11/12/2018)	S3
	Substituted by:	1089 9513 04 - CONTACT BLOCK (quantity: 1)			
	1088 0031 02	1	CONNECTOR 2-POLE	(17/10/2017 - 11/12/2018)	
	Electrical legend:	X153 (Smartbox)			
	1088 0039 07	3	TERMINAL	(17/10/2017 - 11/12/2018)	X152
	1088 0039 05	1	PLATE	(17/10/2017 - 11/12/2018)	X152
	1088 0039 26	1	CONNECTOR	(17/10/2017 - 11/12/2018)	
	Electrical legend:	X152 (remove coding pin 1,3)			
	1088 0037 99	4	PIN	(17/10/2017 - 11/12/2018)	X152:1; 3
	~~1088 0031 81~~	7	END STOP BRACKET	(17/10/2017 - 11/12/2018)	

Legend:

FREQ:60HZ - Frequency:60 Hz
IDRY:Y - Integrated dryer:Yes
MODEL:GA90VP_16 - Model:GA 90VSD+
MOVOL:200V - Supply voltage:200 V
MOVOL:380V - Supply voltage:380 V

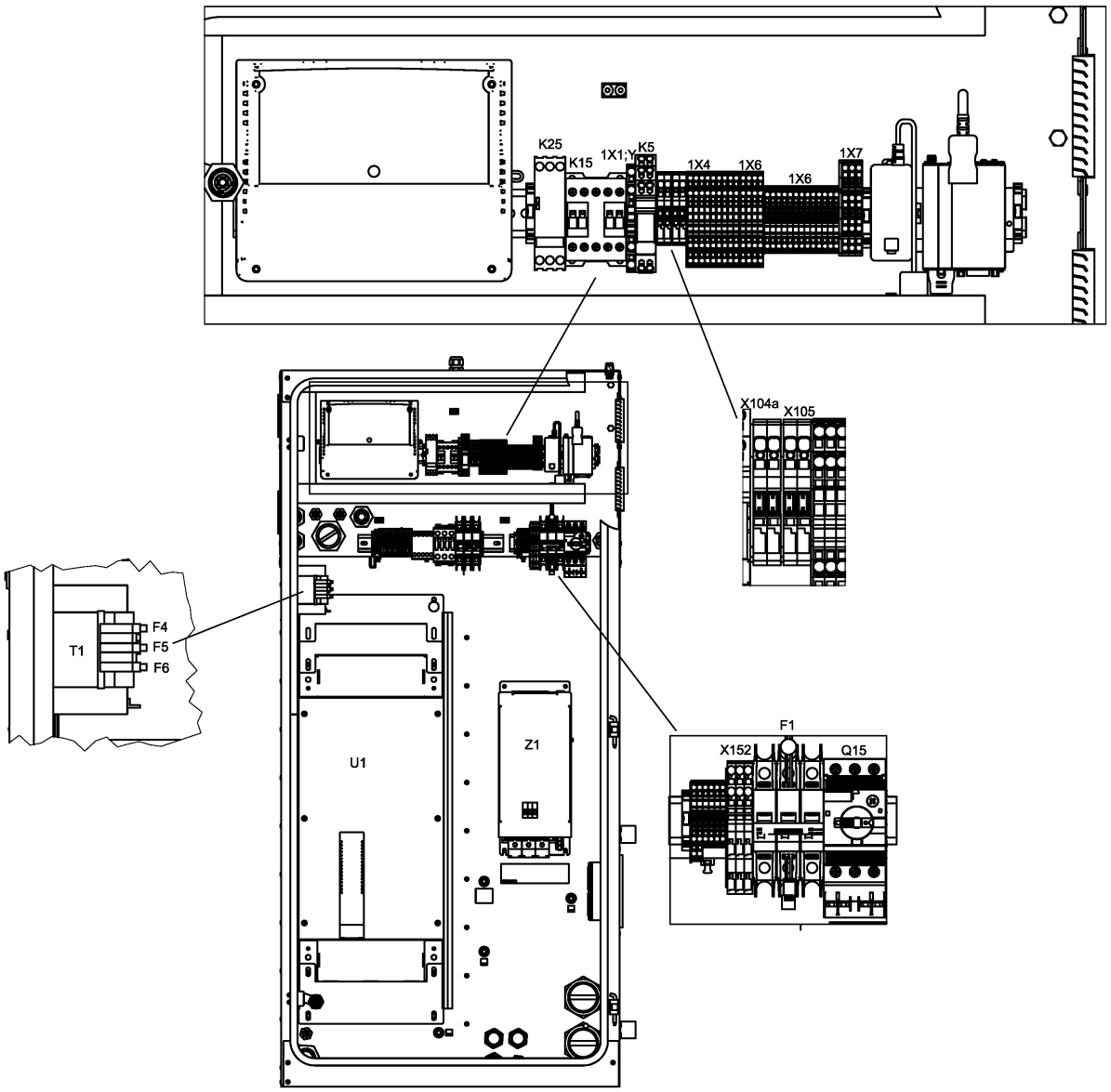
K25
K15
1X1;
K5
1X4
1X6
1X6
1X7
X104a
X105
T1
F4
F5
F6
U1
Z1
F1
X152
Q15

Ref	Part Number	Qty	Name	Validity	EL
	Electrical legend:	Connector/terminal rail			
	Substituted by:	1089 0577 82 - END RETAINER (quantity: 1)			
	1088 0039 38	2	TERMINAL	(17/10/2017 - 11/12/2018)	1X11:2,5
	1088 0039 40	1	PLATE	(17/10/2017 - 11/12/2018)	1X11
	1088 0039 34	4	TERMINAL	(17/10/2017 - 11/12/2018)	
	Electrical legend:	1X11:30,301,34			
	1088 0039 35	1	PLATE	(17/10/2017 - 11/12/2018)	1X11
	1088 0039 04	2	TERMINAL	(17/10/2017 - 11/12/2018)	X104a
	1088 0037 99	2	PIN	(17/10/2017 - 11/12/2018)	X104a/X105
	1088 0039 02	1	PLATE	(17/10/2017 - 11/12/2018)	X104a
	1088 0039 04	2	TERMINAL	(17/10/2017 - 11/12/2018)	
	1088 0039 02	1	PLATE	(17/10/2017 - 11/12/2018)	
	1088 0039 34	13	TERMINAL	(17/10/2017 - 11/12/2018)	1X6
	1088 0037 69	3	CONNECTOR	(17/10/2017 - 11/12/2018)	1X7
	1088 0039 35	1	PLATE	(17/10/2017 - 11/12/2018)	1X6
	1088 0040 37	1	END PLATE	(17/10/2017 - 11/12/2018)	1X7
	1088 0039 36	9	TERMINAL	(17/10/2017 - 11/12/2018)	1X4
	1088 0039 36	4	TERMINAL	(17/10/2017 - 11/12/2018)	1X6
	1088 0039 37	1	END PLATE	(17/10/2017 - 11/12/2018)	1X4
	1088 0039 37	1	END PLATE	(17/10/2017 - 11/12/2018)	1X6
	1088 0039 37	1	END PLATE	(17/10/2017 - 11/12/2018)	1X1:Y/D
	1088 0037 81	1	CONNECTOR	(17/10/2017 - 11/12/2018)	2X27
	1088 0037 80	1	CONNECTOR	(17/10/2017 - 11/12/2018)	2X28
	1088 0031 32	1	CONNECTOR	(17/10/2017 - 11/12/2018)	2X30
	1088 0031 26	1	CONNECTOR 6-POLE	(17/10/2017 - 11/12/2018)	2X31
	~~1089 9664 06~~	1	SWITCH	(17/10/2017 - 11/12/2018)	Q15
	Substituted by:	1089 9551 97 - AUX.CONTACT CIRCUIT BREAKER (quantity: 1)			
	1089 9551 18	1	CIRCUIT BREAKER	(17/10/2017 - 11/12/2018)	Q15
	1088 0038 26	1	TERMINAL	(17/10/2017 - 11/12/2018)	1X1:Y/D
	1089 9602 79	1	CONTACTOR 110 V	(17/10/2017 - 11/12/2018)	K15
	1089 9461 26	1	PHASE SEQUENCE RELAY	(17/10/2017 - 11/12/2018)	K25
	1088 0032 17	1	RELAY 115 VAC	(17/10/2017 - 11/12/2018)	K5
	0991 8011 21	AR	CABLE TRAY	(17/10/2017 - 11/12/2018)	L=1384mm
	1900 2203 01	1	DRYER RAIL	(17/10/2017 - 11/12/2018)	
	Electrical legend:	With trafo on dryer			
	1088 0031 13	1	CONNECTOR 13-POLE	(17/10/2017 - 11/12/2018)	1X30
	1088 0037 82	1	CONNECTOR	(17/10/2017 - 11/12/2018)	3X34
	0697 9811 13	1	PLUG	(17/10/2017 - 11/12/2018)	
	Electrical legend:	Energy recovery			
	0989 3700 44	1	LOCKNUT	(17/10/2017 - 11/12/2018)	
	Electrical legend:	Energy recovery			
	0697 9811 12	1	PLUG	(17/10/2017 - 11/12/2018)	
	Electrical legend:	Control circuit of T10			
	0989 3700 43	1	NUT	(17/10/2017 - 11/12/2018)	
	Electrical legend:	Control circuit of T10			

Legend:

FREQ:60HZ - Frequency:60 Hz
IDRY:Y - Integrated dryer:Yes
MODEL:GA90VP_16 - Model:GA 90VSD+
MOVOL:200V - Supply voltage:200 V
MOVOL:380V - Supply voltage:380 V

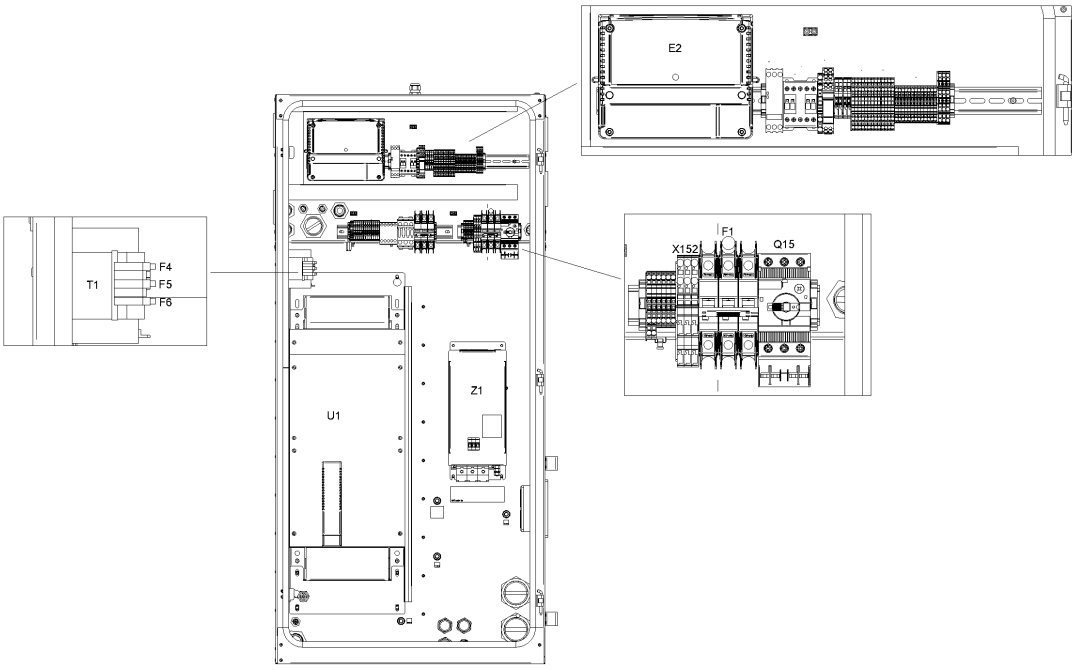
E2
T1
F4
F5
F6
U1
Z1
X152
F1
Q15

26.14 - IT Ancillaries GA 90 VSD+ - 200V-380V/60Hz - Full-Feature (12/12/2018 - 16/12/2019)

(MOVOL:200V , MOVOL:380V) + FREQ:60HZ + IDRY:Y + MODEL:GA90VP_16

Ref	Part Number	Qty	Name	Validity	EL
	1900 2202 29	1	CUBICLE	(12/12/2018 - ...)	
	9820 3000 31	1	ASSEMBLY DRAWING	(12/12/2018 - 16/12/2019)	AD
	9820 3000 27	1	SERVICE DIAGRAM	(12/12/2018 - 16/12/2019)	SD
	1622 3798 72	1	WIRE HARNESS	(12/12/2018 - 16/12/2019)	Comm Cable
	1622 5099 04	1	DI CHANE CABLE (1400MM)	(12/12/2018 - 16/12/2019)	
	Electrical legend:	Comm Cable Loose supply			
	1649 8001 22	1	CUBICLE	(12/12/2018 - 16/12/2019)	MSA
	1649 8001 32	1	PLATE NEOS "D"	(12/12/2018 - 16/12/2019)	
	Electrical legend:	Mounting plate			
	1649 8003 85	1	MOUNTING PLATE	(12/12/2018 - 16/12/2019)	
	Electrical legend:	Mounting plate			
	1649 8002 39	1	WIRE HARNESS	(12/12/2018 - 16/12/2019)	WH
	1649 8002 40	1	WIRE HARNESS	(12/12/2018 - 16/12/2019)	WH
	1649 8002 72	1	CABLE POWER	(12/12/2018 - 16/12/2019)	
	Electrical legend:	Full feature (FF) Drain			
	1649 8002 73	1	WIRE HARNESS	(12/12/2018 - 16/12/2019)	
	Electrical legend:	Pack Drain + Air filter switch			
	1649 8002 75	1	WIRE HARNESS	(12/12/2018 - 16/12/2019)	
	Electrical legend:	Relative Humidity sensor			
	1649 8001 44	3	MOTOR CABLE	(12/12/2018 - 16/12/2019)	
	Electrical legend:	Motor conduit			
	1649 8001 47	1	MOTOR CABLE	(12/12/2018 - 16/12/2019)	
	Electrical legend:	Motor conduit			
		1	DATALABEL	(12/12/2018 - 16/12/2019)	Label
	1079 9901 68	1	WARNING LABEL	(12/12/2018 - 16/12/2019)	Label
	1649 8005 00	-	LABEL	(12/12/2018 - 16/12/2019)	Label
	1900 5350 19	1	INVERTER	(12/12/2018 - 16/12/2019)	U1
	1631 2079 00	1	NANOPERMRING	(12/12/2018 - 16/12/2019)	
	Electrical legend:	Nanoperm ring			
	0697 9811 17	2	PLUG	(12/12/2018 - 16/12/2019)	
	Electrical legend:	Plug for transfo supply			
	0989 3700 48	2	NUT	(12/12/2018 - 16/12/2019)	
	Electrical legend:	Nut for transfo supply			
	0698 5140 72	1	CABLE GLAND	(12/12/2018 - 16/12/2019)	Fan
	0698 5140 71	1	CABLE GLAND	(12/12/2018 - 16/12/2019)	
	Electrical legend:	Ambient sensor			
	0697 9809 20	1	LOCKNUT	(12/12/2018 - 16/12/2019)	
	Electrical legend:	Ambient sensor			
	1089 9556 44	1	FAN WITH FILTER	(12/12/2018 - 16/12/2019)	Cubicle fan
	1089 9556 72	4	AIR INLET WITHOUT FILTER	(12/12/2018 - 16/12/2019)	Filter grid
	1088 0032 09	1	CONNECTOR	(12/12/2018 - 16/12/2019)	X3
	1089 9572 06	1	LINE FILTER	(12/12/2018 - 16/12/2019)	Z1 for 90kw
	1089 9562 04	1	STRAP	(12/12/2018 - 16/12/2019)	HF-screen
	1089 9514 56	1	TRANSFORMER	(12/12/2018 - 16/12/2019)	T1
	1089 9522 26	1	CIRCUIT BREAKER	(12/12/2018 - 16/12/2019)	F1
	1089 9513 41	1	PUSH BUTTON	(12/12/2018 - 16/12/2019)	S3
	1089 9513 28	1	HOLDER	(12/12/2018 - 16/12/2019)	S3
	~~1089 9513 30~~	4	CONTACTOR	(12/12/2018 - 16/12/2019)	S3
	Substituted by:	1089 9513 04 - CONTACT BLOCK (quantity: 1)			
	1088 0031 02	1	CONNECTOR 2-POLE	(12/12/2018 - 17/02/2019)	
	1088 0039 07	3	TERMINAL	(12/12/2018 - 16/12/2019)	X152
	1088 0039 05	1	PLATE	(12/12/2018 - 16/12/2019)	X152
	1088 0039 26	1	CONNECTOR	(12/12/2018 - 16/12/2019)	
	Electrical legend:	X152 (remove coding pin 1,3)			
	1088 0037 99	4	PIN	(12/12/2018 - 16/12/2019)	X152:1; 3

Legend:

FREQ:60HZ - Frequency:60 Hz
IDRY:Y - Integrated dryer:Yes
MODEL:GA90VP_16 - Model:GA 90VSD+
MOVOL:200V - Supply voltage:200 V
MOVOL:380V - Supply voltage:380 V

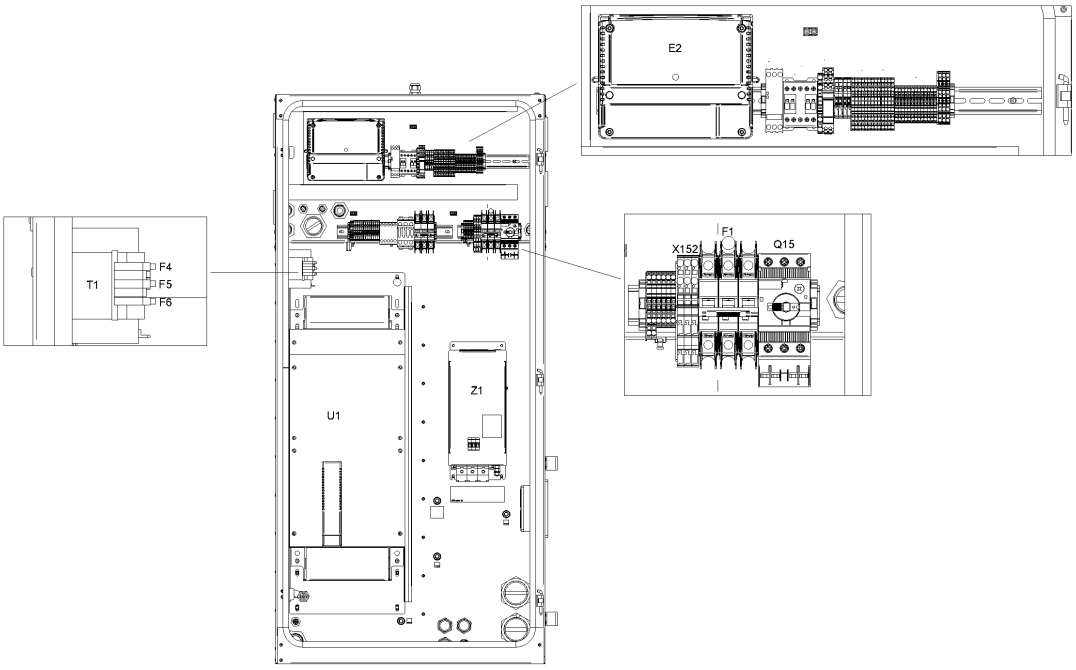
E2
T1
F4
F5
F6
U1
Z1
X152
F1
Q15

Ref	Part Number	Qty	Name	Validity	EL
	~~1088 0031 81~~	7	END STOP BRACKET 6MM	(12/12/2018 - 16/12/2019)	
	Electrical legend:	Connector/terminal rail			
	Substituted by:	1089 0577 82 - END RETAINER (quantity: 1)			
	1088 0039 38	2	TERMINAL	(12/12/2018 - 16/12/2019)	1X11:2,5
	1088 0039 40	1	PLATE	(12/12/2018 - 16/12/2019)	1X11
	1088 0039 34	4	TERMINAL	(12/12/2018 - 16/12/2019)	
	Electrical legend:	1X11:30,301,34			
	1088 0039 35	1	PLATE	(12/12/2018 - 16/12/2019)	1X11
	1088 0039 04	2	TERMINAL	(12/12/2018 - 16/12/2019)	X104a
	1088 0037 99	2	PIN	(12/12/2018 - 16/12/2019)	X104a/X105
	1088 0039 02	1	PLATE	(12/12/2018 - 16/12/2019)	X104a
	1088 0039 07	2	TERMINAL	(12/12/2018 - 16/12/2019)	X105
	1088 0039 05	1	PLATE	(12/12/2018 - 16/12/2019)	X105
	1088 0039 34	13	TERMINAL	(12/12/2018 - 16/12/2019)	1X6
	1088 0037 69	3	CONNECTOR	(12/12/2018 - 16/12/2019)	1X7
	1088 0039 35	1	PLATE	(12/12/2018 - 16/12/2019)	1X6
	1088 0040 37	1	END PLATE	(12/12/2018 - 16/12/2019)	1X7
	1088 0039 36	9	TERMINAL	(12/12/2018 - 16/12/2019)	1X4
	1088 0039 36	4	TERMINAL	(12/12/2018 - 16/12/2019)	1X6
	1088 0039 37	1	END PLATE	(12/12/2018 - 16/12/2019)	1X4
	1088 0039 37	1	END PLATE	(12/12/2018 - 16/12/2019)	1X6
	1088 0039 37	1	END PLATE	(12/12/2018 - 16/12/2019)	1X1:Y/D
	1088 0037 81	1	CONNECTOR	(12/12/2018 - 16/12/2019)	2X27
	1088 0037 80	1	CONNECTOR	(12/12/2018 - 16/12/2019)	2X28
	1088 0031 32	1	CONNECTOR	(12/12/2018 - 16/12/2019)	2X30
	1088 0031 26	1	CONNECTOR 6-POLE	(12/12/2018 - 16/12/2019)	2X31
	~~1089 9664 06~~	1	SWITCH	(12/12/2018 - 16/12/2019)	Q15
	Substituted by:	1089 9551 97 - AUX.CONTACT CIRCUIT BREAKER (quantity: 1)			
	1089 9551 18	1	CIRCUIT BREAKER	(12/12/2018 - 16/12/2019)	Q15
	1088 0038 26	1	TERMINAL	(12/12/2018 - 16/12/2019)	1X1:Y/D
	1089 9602 79	1	CONTACTOR 110 V	(12/12/2018 - 16/12/2019)	K15
	1089 9461 26	1	PHASE SEQUENCE RELAY	(12/12/2018 - 16/12/2019)	K25
	1088 0032 17	1	RELAY 115 VAC	(12/12/2018 - 16/12/2019)	K5
	0991 8011 21	AR	CABLE TRAY	(12/12/2018 - 16/12/2019)	L=1384mm
	1900 2203 01	1	DRYER RAIL	(12/12/2018 - 16/12/2019)	
	Electrical legend:	With trafo on dryer			
	1088 0031 13	1	CONNECTOR 13-POLE	(12/12/2018 - 16/12/2019)	1X30
	1088 0037 82	1	CONNECTOR	(12/12/2018 - 16/12/2019)	3X34
	0697 9811 13	1	PLUG	(12/12/2018 - 16/12/2019)	
	Electrical legend:	Energy recovery			
	0989 3700 44	1	LOCKNUT	(12/12/2018 - 16/12/2019)	
	Electrical legend:	Energy recovery			
	0697 9811 12	1	PLUG	(12/12/2018 - 16/12/2019)	
	Electrical legend:	Control circuit of T10			
	0989 3700 43	1	NUT	(12/12/2018 - 16/12/2019)	
	Electrical legend:	Control circuit of T10			
	0697 9811 10	1	PLUG	(12/12/2018 - 16/12/2019)	
	Electrical legend:	Plug for smartbox hole			
	0989 3700 41	1	LOCKNUT	(12/12/2018 - 16/12/2019)	
	Electrical legend:	Nut for smartbox hole			

Legend:

FREQ:60HZ - Frequency:60 Hz
IDRY:Y - Integrated dryer:Yes
MODEL:GA90VP_16 - Model:GA 90VSD+
MOVOL:200V - Supply voltage:200 V
MOVOL:380V - Supply voltage:380 V

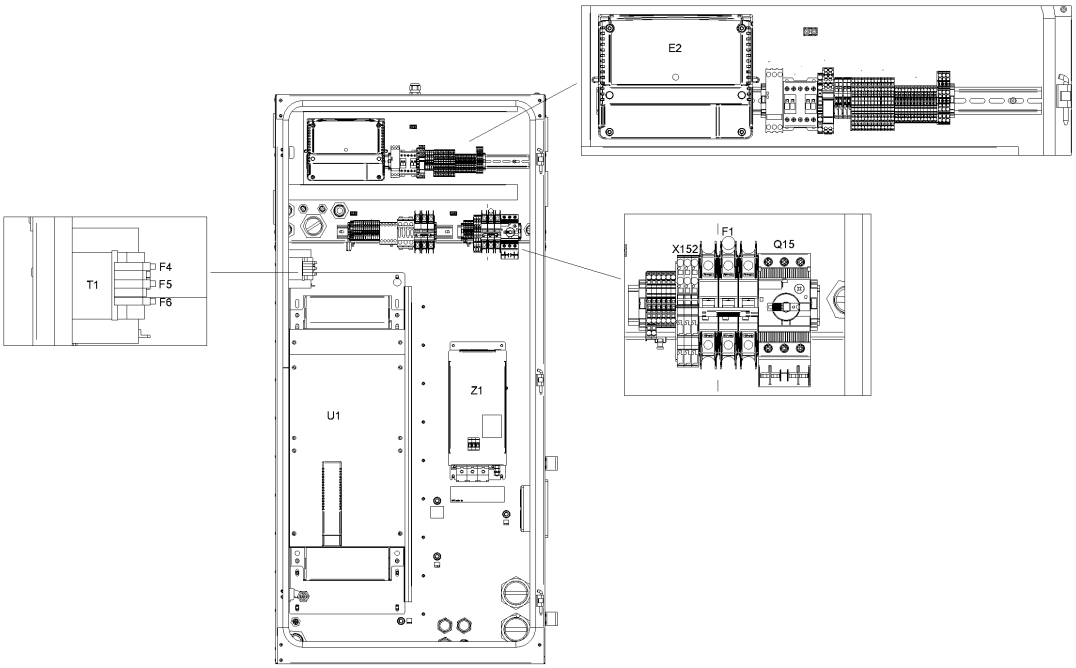
E2
T1
F4
F5
F6
U1
Z1
X152
F1
Q15

Ref	Part Number	Qty	Name	Validity	EL
	1900 2202 49	1	CUBICLE	(17/12/2019 - ...)	
	9820 3000 31	1	ASSEMBLY DRAWING	(17/12/2019 - ...)	AD
	9820 3000 27	1	SERVICE DIAGRAM	(17/12/2019 - ...)	SD
	1622 3798 72	1	WIRE HARNESS	(17/12/2019 - ...)	Comm Cable
	1622 5099 04	1	DI CHANE CABLE (1400MM)	(17/12/2019 - ...)	
	Electrical legend:	Comm Cable Loose supply			
	1649 8006 00	1	CUBICLE	(17/12/2019 - ...)	MSA
	1649 8001 32	1	PLATE NEOS "D"	(17/12/2019 - ...)	
	Electrical legend:	Mounting plate			
	1649 8003 85	1	MOUNTING PLATE	(17/12/2019 - ...)	
	Electrical legend:	Mounting plate			
	1649 8002 39	1	WIRE HARNESS	(17/12/2019 - ...)	WH
	1649 8002 40	1	WIRE HARNESS	(17/12/2019 - ...)	WH
	1649 8002 72	1	CABLE POWER	(17/12/2019 - ...)	
	Electrical legend:	Full feature (FF) Drain			
	1649 8002 73	1	WIRE HARNESS	(17/12/2019 - ...)	
	Electrical legend:	Pack Drain + Air filter switch			
	1649 8002 75	1	WIRE HARNESS	(17/12/2019 - ...)	
	Electrical legend:	Relative Humidity sensor			
	1649 8001 44	3	MOTOR CABLE	(17/12/2019 - ...)	
	Electrical legend:	Motor conduit			
	1649 8001 47	1	MOTOR CABLE	(17/12/2019 - ...)	
	Electrical legend:	Motor conduit			
	1625 3906 31	1	DATA LABEL	(17/12/2019 - ...)	Label
	1079 9901 68	1	WARNING LABEL	(17/12/2019 - ...)	Label
	1649 8005 00	0	LABEL	(17/12/2019 - ...)	Label
	1900 5350 19	1	INVERTER	(17/12/2019 - ...)	U1
	1631 2079 00	1	NANOPERMRING	(17/12/2019 - ...)	
	Electrical legend:	Nanoperm ring			
	0697 9811 17	2	PLUG	(17/12/2019 - ...)	
	Electrical legend:	Plug for transfo supply			
	0989 3700 48	2	NUT	(17/12/2019 - ...)	
	Electrical legend:	Nut for transfo supply			
	0698 5140 72	1	CABLE GLAND	(17/12/2019 - ...)	Fan
	0698 5140 71	1	CABLE GLAND	(17/12/2019 - ...)	
	Electrical legend:	Ambient sensor			
	0697 9809 20	1	LOCKNUT	(17/12/2019 - ...)	
	Electrical legend:	Ambient sensor			
	1089 9556 44	1	FAN WITH FILTER	(17/12/2019 - ...)	Cubicle fan
	1089 9556 72	4	AIR INLET WITHOUT FILTER	(17/12/2019 - ...)	Filter grid
	1088 0032 09	1	CONNECTOR	(17/12/2019 - ...)	X3
	1089 9572 06	1	LINE FILTER	(17/12/2019 - ...)	Z1 for 90kw
	1089 9562 04	1	STRAP	(17/12/2019 - ...)	HF-screen
	1089 9514 56	1	TRANSFORMER	(17/12/2019 - ...)	T1
	1089 9522 26	1	CIRCUIT BREAKER	(17/12/2019 - ...)	F1
	1089 9513 41	1	PUSH BUTTON	(17/12/2019 - ...)	S3
	1089 9513 28	1	HOLDER	(17/12/2019 - ...)	S3
	~~1089 9513 30~~	4	CONTACTOR	(17/12/2019 - ...)	S3
	Substituted by:	1089 9513 04 - CONTACT BLOCK (quantity: 1)			
	1088 0039 07	3	TERMINAL	(17/12/2019 - ...)	X152
	1088 0039 05	1	PLATE	(17/12/2019 - ...)	X152
	1088 0039 26	1	CONNECTOR	(17/12/2019 - ...)	
	Electrical legend:	X152 (remove coding pin 1,3)			
	1088 0037 99	4	PIN	(17/12/2019 - ...)	X152:1; 3
	~~1088 0031 81~~	7	END STOP BRACKET 6MM	(17/12/2019 - ...)	
	Electrical legend:	Connector/terminal rail			

Legend:

FREQ:60HZ - Frequency:60 Hz
MOVOL:200V - Supply voltage:200 V
IDRY:Y - Integrated dryer:Yes
MOVOL:380V - Supply voltage:380 V
MODEL:GA90VP_16 - Model:GA 90VSD+

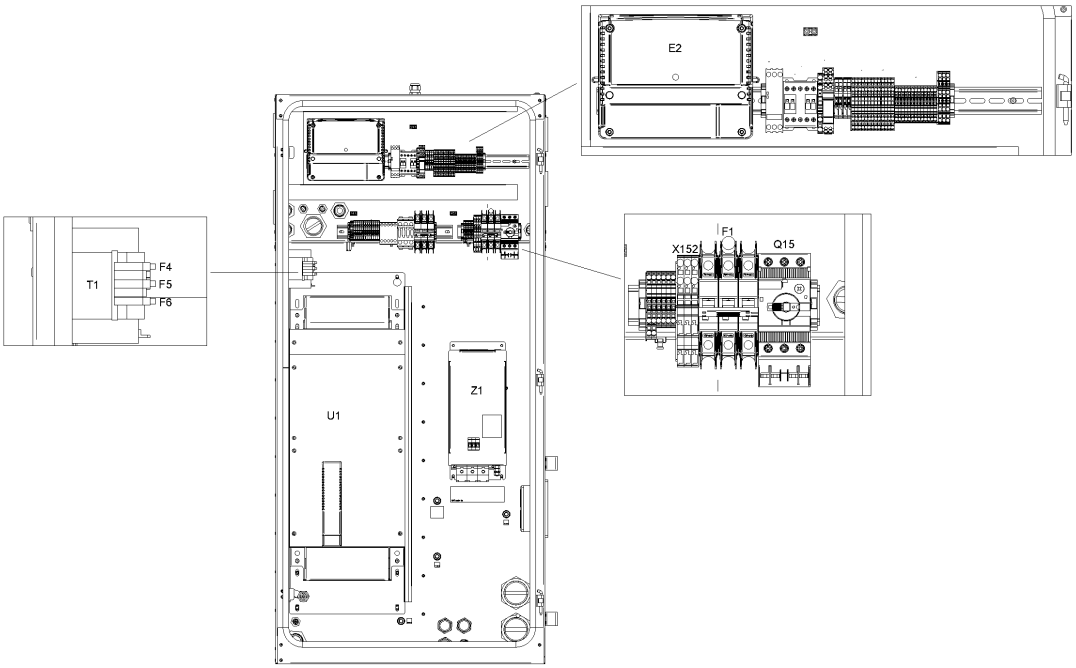
E2
T1
F4
F5
F6
U1
Z1
X152
F1
Q15

Ref	Part Number	Qty	Name	Validity	EL
	Substituted by:	1089 0577 82 - END RETAINER (quantity: 1)			
	1088 0039 38	2	TERMINAL	(17/12/2019 - ...)	1X11:2,5
	1088 0039 40	1	PLATE	(17/12/2019 - ...)	1X11
	1088 0039 34	4	TERMINAL	(17/12/2019 - ...)	
	Electrical legend:	1X11:30,301,34			
	1088 0039 35	1	PLATE	(17/12/2019 - ...)	1X11
	1088 0039 04	2	TERMINAL	(17/12/2019 - ...)	X104a
	1088 0037 99	2	PIN	(17/12/2019 - ...)	X104a/X105
	1088 0039 02	1	PLATE	(17/12/2019 - ...)	X104a
	1088 0039 07	2	TERMINAL	(17/12/2019 - ...)	X105
	1088 0039 05	1	PLATE	(17/12/2019 - ...)	X105
	1088 0039 34	13	TERMINAL	(17/12/2019 - ...)	1X6
	1088 0037 69	3	CONNECTOR	(17/12/2019 - ...)	1X7
	1088 0039 35	1	PLATE	(17/12/2019 - ...)	1X6
	1088 0040 37	1	END PLATE	(17/12/2019 - ...)	1X7
	1088 0039 36	9	TERMINAL	(17/12/2019 - ...)	1X4
	1088 0039 36	4	TERMINAL	(17/12/2019 - ...)	1X6
	1088 0039 37	1	END PLATE	(17/12/2019 - ...)	1X4
	1088 0039 37	1	END PLATE	(17/12/2019 - ...)	1X6
	1088 0039 37	1	END PLATE	(17/12/2019 - ...)	1X1:Y/D
	1088 0037 81	1	CONNECTOR	(17/12/2019 - ...)	2X27
	1088 0037 80	1	CONNECTOR	(17/12/2019 - ...)	2X28
	1088 0031 32	1	CONNECTOR	(17/12/2019 - ...)	2X30
	1088 0031 26	1	CONNECTOR 6-POLE	(17/12/2019 - ...)	2X31
	~~1089 9664 06~~	1	SWITCH	(17/12/2019 - ...)	Q15
	Substituted by:	1089 9551 97 - AUX.CONTACT CIRCUIT BREAKER (quantity: 1)			
	1089 9551 18	1	CIRCUIT BREAKER	(17/12/2019 - ...)	Q15
	1088 0038 26	1	TERMINAL	(17/12/2019 - ...)	1X1:Y/D
	1089 9602 79	1	CONTACTOR 110 V	(17/12/2019 - ...)	K15
	1089 9461 26	1	PHASE SEQUENCE RELAY	(17/12/2019 - ...)	K25
	1088 0032 17	1	RELAY 115 VAC	(17/12/2019 - ...)	K5
	0991 8011 21	AR	CABLE TRAY	(17/12/2019 - ...)	L=1384mm
	1900 2203 01	1	DRYER RAIL	(17/12/2019 - ...)	
	Electrical legend:	With trafo on dryer			
	1088 0031 13	1	CONNECTOR 13-POLE	(17/12/2019 - ...)	1X30
	1088 0037 82	1	CONNECTOR	(17/12/2019 - ...)	3X34
	0697 9811 13	1	PLUG	(17/12/2019 - ...)	
	Electrical legend:	Energy recovery			
	0989 3700 44	1	LOCK	(17/12/2019 - ...)	
	Electrical legend:	Energy recovery			
	0697 9811 12	1	PLUG	(17/12/2019 - ...)	
	Electrical legend:	Control circuit of T10			
	0989 3700 43	1	NUT	(17/12/2019 - ...)	
	Electrical legend:	Control circuit of T10			
	0697 9811 10	1	PLUG	(17/12/2019 - ...)	
	Electrical legend:	Plug for smartbox hole			
	0989 3700 41	1	LOCKNUT	(17/12/2019 - ...)	
	Electrical legend:	Nut for smartbox hole			
	1089 9556 37	1	AIR INLET WITH FILTER	(17/12/2019 - ...)	Fan Filter

Legend:

FREQ:60HZ - Frequency:60 Hz
IDRY:Y - Integrated dryer:Yes
MODEL:GA90VP_16 - Model:GA 90VSD+
MOVOL:200V - Supply voltage:200 V
MOVOL:380V - Supply voltage:380 V

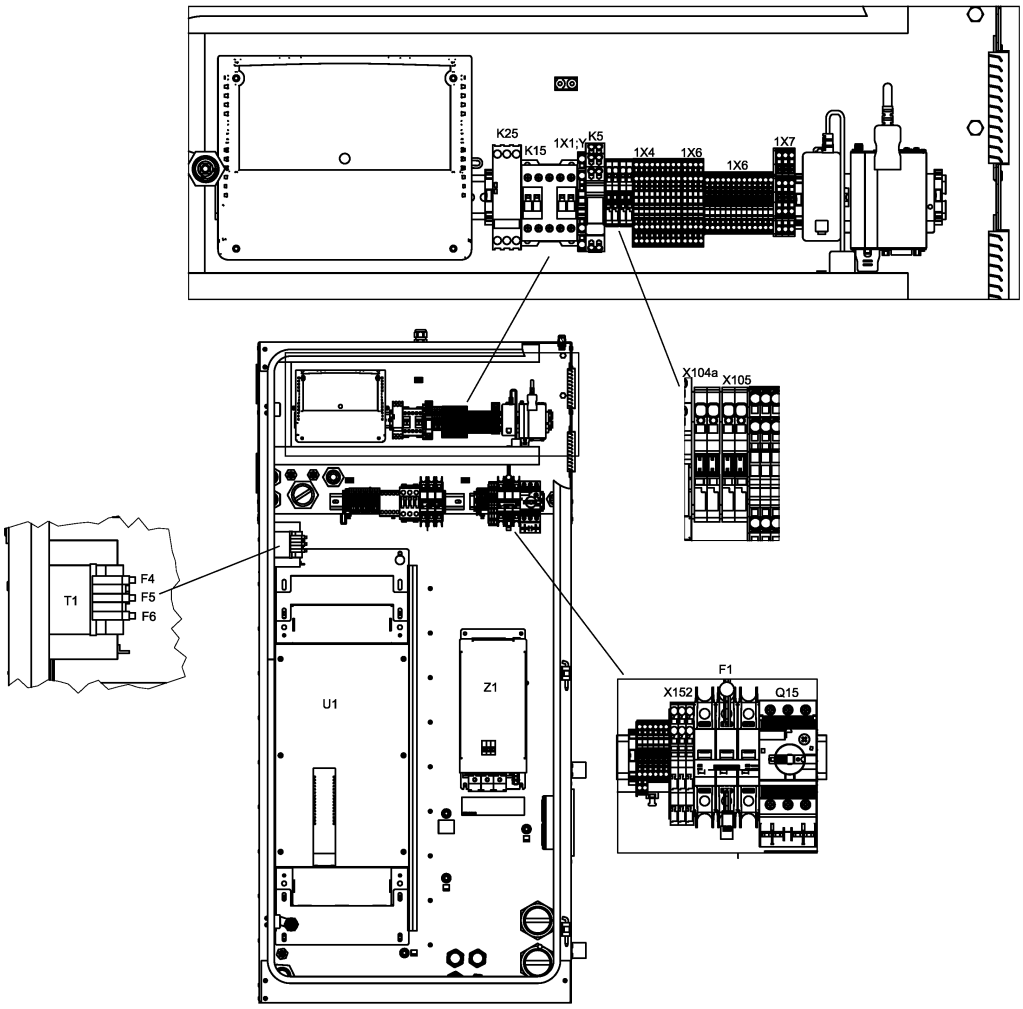
K25
K15
1X1
K5
1X4
1X6
1X6
1X7
X104a
X105
T1
F4
F5
F6
U1
Z1
F1
X152
Q15

26.16 - IT Ancillaries GA 110 VSD+ - 200V-380V/60Hz - Full-Feature (17/10/2017 - 11/12/2018)

(MOVOL:200V , MOVOL:380V) + FREQ:60HZ + IDRY:Y + MODEL:GA110VP_16

Ref	Part Number	Qty	Name	Validity	EL
	1900 2202 16	1	CUBICLE	(17/10/2017 - 11/12/2018)	
	9820 3000 21	1	CUBICLE LAYOUT	(17/10/2017 - 11/12/2018)	-
	9820 3000 22	1	SERVICE DIAGRAM	(17/10/2017 - 11/12/2018)	-
	1622 3798 70	1	WIRE HARNESS COMM CABLE	(17/10/2017 - 11/12/2018)	-
	1622 5099 04	1	DI CHANE CABLE (1400MM)	(17/10/2017 - 11/12/2018)	
	Electrical legend:	Comm Cable Loose supply			
	1649 8001 22	1	CUBICLE	(17/10/2017 - 11/12/2018)	-
•	1202 6584 02	1	SEAL		-
	1649 8001 31	1	PLATE NEOS "E"	(17/10/2017 - 11/12/2018)	-
	1649 8003 85	1	MOUNTING PLATE	(17/10/2017 - 11/12/2018)	-
	1649 8002 39	1	WIRE HARNESS	(17/10/2017 - 11/12/2018)	-
	1649 8002 40	1	WIRE HARNESS	(17/10/2017 - 11/12/2018)	-
	1649 8002 72	1	CABLE POWER	(17/10/2017 - 11/12/2018)	
	Electrical legend:	Full feature (FF) Drain			
	1649 8002 73	1	WIRE HARNESS	(17/10/2017 - 11/12/2018)	
	Electrical legend:	Pack Drain + Air filter switch			
	1649 8002 75	1	WIRE HARNESS	(17/10/2017 - 11/12/2018)	
	Electrical legend:	Relative Humidity sensor			
	1649 8001 43	3	MOTOR CABLE	(17/10/2017 - 11/12/2018)	-
	1649 8001 46	1	MOTOR CABLE	(17/10/2017 - 11/12/2018)	-
		1	DATA LABEL	(02/02/2018 - 11/12/2018)	-
		1	DATA LABEL	(17/10/2017 - 01/02/2018)	-
	1079 9901 68	1	WARNING LABEL	(17/10/2017 - 11/12/2018)	-
	1900 5350 98	1	INVERTER	(17/10/2017 - 11/12/2018)	U1
	1631 2079 00	1	NANOPERMRING	(17/10/2017 - 11/12/2018)	-
	0697 9811 17	2	PLUG	(17/10/2017 - 11/12/2018)	
	Electrical legend:	Plug for transfo supply			
	0989 3700 48	2	NUT	(17/10/2017 - 11/12/2018)	
	Electrical legend:	Nut for transfo supply			
	0698 5140 72	1	CABLE GLAND	(17/10/2017 - 11/12/2018)	Fan
	0698 5140 71	1	CABLE GLAND	(17/10/2017 - 11/12/2018)	
	Electrical legend:	Ambient sensor			
	0697 9809 20	1	LOCKNUT	(17/10/2017 - 11/12/2018)	
	Electrical legend:	Ambient sensor			
	1089 9556 44	1	FAN WITH FILTER	(17/10/2017 - 11/12/2018)	Cubicle fan
		4	AIR INLET W/O FILTER	(17/10/2017 - 11/12/2018)	-
	Service kits:	2901 9901 02 - PREVENTIVE MAINTENANCE KIT - GA 90 VSD+, GA 110 VSD+ 2901 9900 96 - AIR FILTER KIT - GA 90 VSD+, GA 110 VSD+			
	1088 0032 09	1	CONNECTOR	(17/10/2017 - 11/12/2018)	X3
	1089 9572 04	1	LINE FILTER	(17/10/2017 - 11/12/2018)	Z1 for 110kw
	Electrical legend:	Z1 for 110kw			
	1089 9562 04	1	STRAP	(17/10/2017 - 11/12/2018)	HF-screen
	1089 9514 56	1	TRANSFORMER	(17/10/2017 - 11/12/2018)	T1
	1089 9522 26	1	CIRCUIT BREAKER	(17/10/2017 - 11/12/2018)	F1
	1089 9513 41	1	PUSH BUTTON	(17/10/2017 - 11/12/2018)	S3
	1089 9513 28	1	HOLDER	(17/10/2017 - 11/12/2018)	S3
	~~1089 9513 30~~	4	CONTACTOR	(17/10/2017 - 11/12/2018)	S3
	Substituted by:	1089 9513 04 - CONTACT BLOCK (quantity: 1)			
	1088 0031 02	1	CONNECTOR 2-POLE	(17/10/2017 - 11/12/2018)	
	Electrical legend:	X153 (Smartbox)			
	1088 0039 07	3	TERMINAL	(17/10/2017 - 11/12/2018)	X152
	1088 0039 05	1	PLATE	(17/10/2017 - 11/12/2018)	X152
	1088 0039 26	1	CONNECTOR	(17/10/2017 - 11/12/2018)	
	Electrical legend:	X152 (remove coding pin 1,3)			
	1088 0037 99	4	PIN	(17/10/2017 - 11/12/2018)	X152:1; 3

Legend:

FREQ:60HZ - Frequency:60 Hz
IDRY:Y - Integrated dryer:Yes
MODEL:GA110VP_16 - Model:GA 110VSD+
MOVOL:200V - Supply voltage:200 V
MOVOL:380V - Supply voltage:380 V

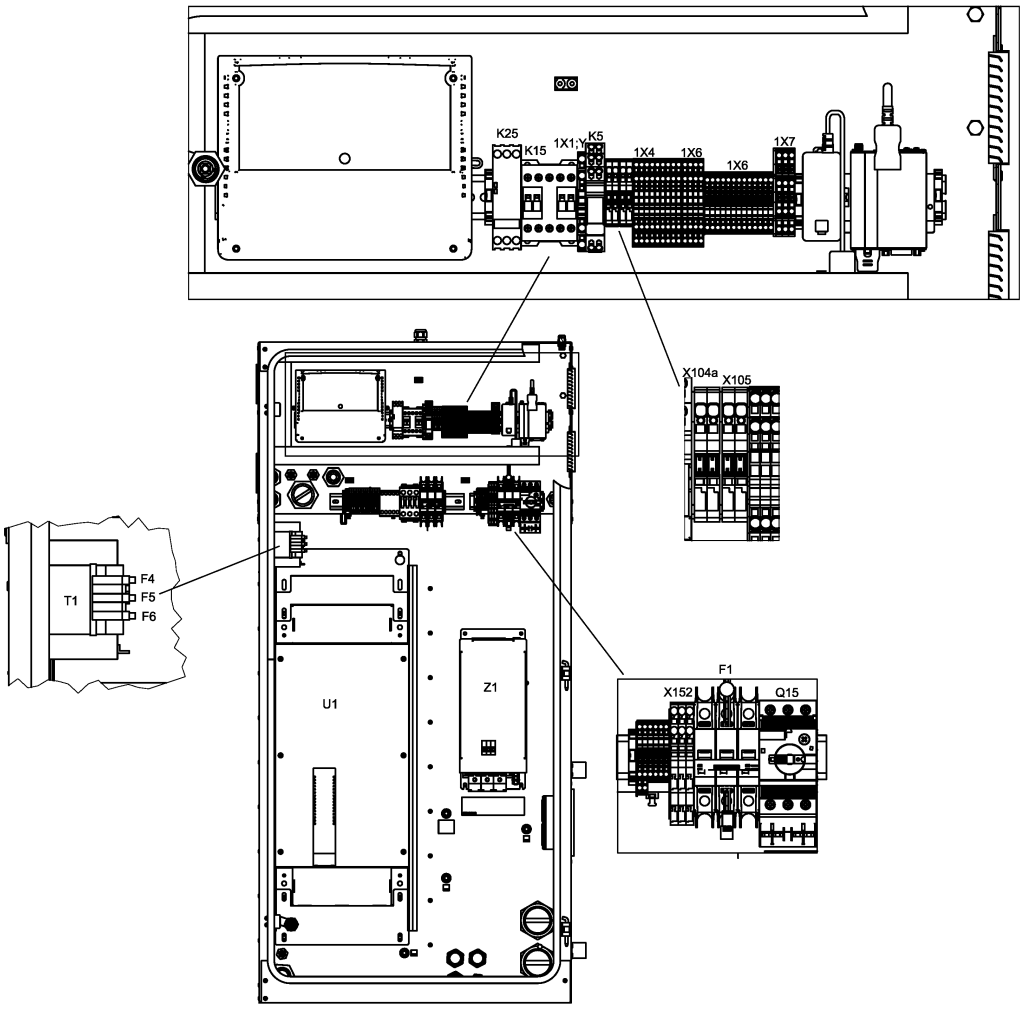
K25
K15
1X1
K5
1X4
1X6
1X6
1X7
X104a
X105
T1
F4
F5
F6
U1
Z1
F1
X152
Q15

Ref	Part Number	Qty	Name	Validity	EL
	~~1088 0031 81~~	7	END STOP BRACKET	(17/10/2017 - 11/12/2018)	
	Electrical legend:	Connector/terminal rail			
	Substituted by:	1089 0577 82 - END RETAINER (quantity: 1)			
	1088 0039 38	2	TERMINAL	(17/10/2017 - 11/12/2018)	1X11:2,5
	1088 0039 40	1	PLATE	(17/10/2017 - 11/12/2018)	1X11
	1088 0039 34	4	TERMINAL	(17/10/2017 - 11/12/2018)	
	Electrical legend:	1X11:30,301,34			
	1088 0039 35	1	PLATE	(17/10/2017 - 11/12/2018)	1X11
	1088 0039 04	2	TERMINAL	(17/10/2017 - 11/12/2018)	X104a
	1088 0037 99	2	PIN	(17/10/2017 - 11/12/2018)	X104a/X105
	1088 0039 02	1	PLATE	(17/10/2017 - 11/12/2018)	X104a
	1088 0039 04	2	TERMINAL	(17/10/2017 - 11/12/2018)	
	1088 0039 02	1	PLATE	(17/10/2017 - 11/12/2018)	
	1088 0039 34	13	TERMINAL	(17/10/2017 - 11/12/2018)	1X6
	1088 0037 69	3	CONNECTOR	(17/10/2017 - 11/12/2018)	1X7
	1088 0039 35	1	PLATE	(17/10/2017 - 11/12/2018)	1X6
	1088 0040 37	1	END PLATE	(17/10/2017 - 11/12/2018)	1X7
	1088 0039 36	9	TERMINAL	(17/10/2017 - 11/12/2018)	1X4
	1088 0039 36	4	TERMINAL	(17/10/2017 - 11/12/2018)	1X6
	1088 0039 37	1	END PLATE	(17/10/2017 - 11/12/2018)	1X4
	1088 0039 37	1	END PLATE	(17/10/2017 - 11/12/2018)	1X6
	1088 0039 37	1	END PLATE	(17/10/2017 - 11/12/2018)	1X1:Y/D
	1088 0037 81	1	CONNECTOR	(17/10/2017 - 11/12/2018)	2X27
	1088 0037 80	1	CONNECTOR	(17/10/2017 - 11/12/2018)	2X28
	1088 0031 32	1	CONNECTOR	(17/10/2017 - 11/12/2018)	2X30
	1088 0031 26	1	CONNECTOR 6-POLE	(17/10/2017 - 11/12/2018)	2X31
	~~1089 9664 06~~	1	SWITCH	(17/10/2017 - 11/12/2018)	Q15
	Substituted by:	1089 9551 97 - AUX.CONTACT CIRCUIT BREAKER (quantity: 1)			
	1089 9551 19	1	CIRCUIT BREAK.	(17/10/2017 - 11/12/2018)	Q15
	1088 0038 26	1	TERMINAL	(17/10/2017 - 11/12/2018)	1X1:Y/D
	1089 9602 79	1	CONTACTOR 110 V	(17/10/2017 - 11/12/2018)	K15
	1089 9461 26	1	PHASE SEQUENCE RELAY	(17/10/2017 - 11/12/2018)	K25
	1088 0032 17	1	RELAY 115 VAC	(17/10/2017 - 11/12/2018)	K5
	0991 8011 21	AR	CABLE TRAY	(17/10/2017 - 11/12/2018)	L=1384mm
	1900 2203 01	1	DRYER RAIL	(17/10/2017 - 11/12/2018)	
	Electrical legend:	With trafo on dryer			
	1088 0031 13	1	CONNECTOR 13-POLE	(17/10/2017 - 11/12/2018)	1X30
	1088 0037 82	1	CONNECTOR	(17/10/2017 - 11/12/2018)	3X34
	0697 9811 13	1	PLUG M25	(17/10/2017 - 11/12/2018)	
	Electrical legend:	Energy recovery			
	0989 3700 44	1	LOCKNUT	(17/10/2017 - 11/12/2018)	
	Electrical legend:	Energy recovery			
	0697 9811 12	1	PLUG	(17/10/2017 - 11/12/2018)	
	Electrical legend:	Control circuit of T10			
	0989 3700 43	1	NUT	(17/10/2017 - 11/12/2018)	
	Electrical legend:	Control circuit of T10			

Legend:

FREQ:60HZ - Frequency:60 Hz
MOVOL:200V - Supply voltage:200 V
IDRY:Y - Integrated dryer:Yes
MOVOL:380V - Supply voltage:380 V
MODEL:GA110VP_16 - Model:GA 110VSD+

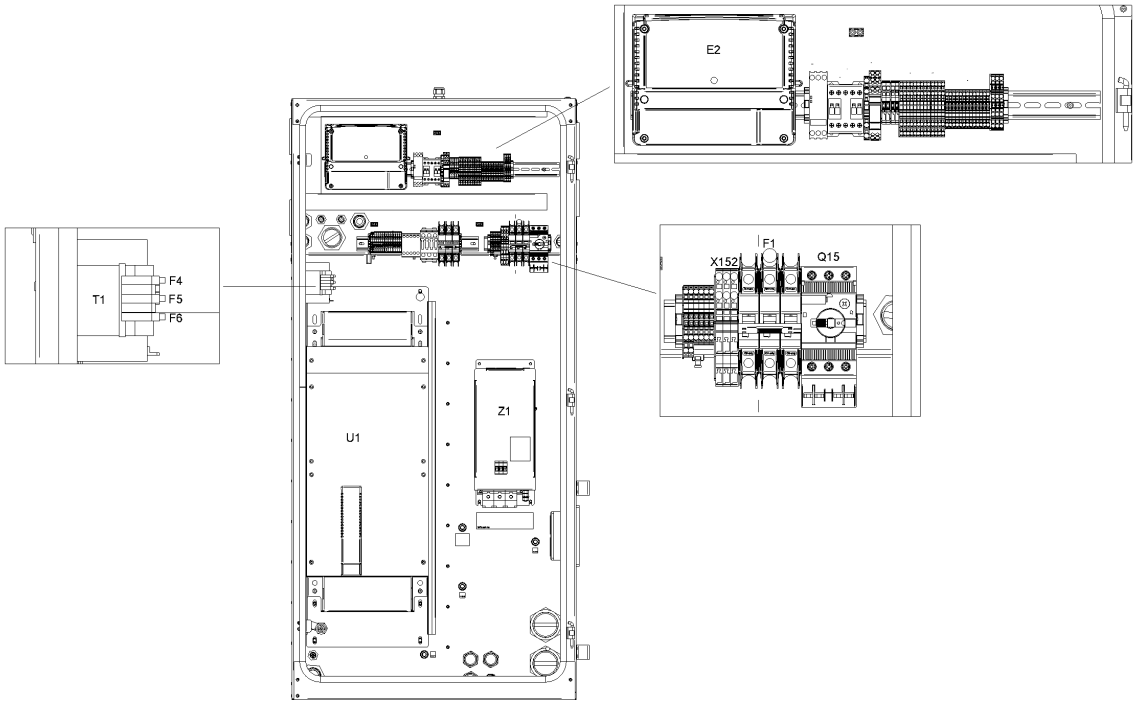
E2
T1
F4
F5
F6
X152
F1
Q15
U1
Z1

Ref	Part Number	Qty	Name	Validity	EL
	1900 2202 35	1	CUBICLE	(12/12/2018 - ...)	
	9820 3000 31	1	ASSEMBLY DRAWING	(12/12/2018 - 04/02/2020)	AD
	9820 3000 27	1	SERVICE DIAGRAM	(12/12/2018 - 04/02/2020)	SD
	1622 3798 72	1	WIRE HARNESS	(12/12/2018 - 04/02/2020)	Comm Cable
	1622 5099 04	1	DI CHANE CABLE (1400MM)	(12/12/2018 - 04/02/2020)	
	Electrical legend:	Comm Cable Loose supply			
	1649 8001 22	1	CUBICLE MSA	(12/12/2018 - 04/02/2020)	MSA
	1649 8001 31	1	PLATE NEOS "E"	(12/12/2018 - 04/02/2020)	
	Electrical legend:	Mounting plate			
	1649 8003 85	1	MOUNTING PLATE	(12/12/2018 - 04/02/2020)	
	Electrical legend:	Mounting plate			
	1649 8002 39	1	WIRE HARNESS	(12/12/2018 - 04/02/2020)	WH
	1649 8002 40	1	WIRE HARNESS	(12/12/2018 - 04/02/2020)	WH
	1649 8002 72	1	CABLE POWER	(12/12/2018 - 04/02/2020)	
	Electrical legend:	Full feature (FF) Drain			
	1649 8002 73	1	WIRE HARNESS	(12/12/2018 - 04/02/2020)	
	Electrical legend:	Pack Drain + Air filter switch			
	1649 8002 75	1	WIRE HARNESS	(12/12/2018 - 04/02/2020)	
	Electrical legend:	Relative Humidity sensor			
	• 1089 9320 10	1	TEMP. SENSOR	(22/07/2019 - 04/02/2020)	
	1649 8001 43	3	MOTOR CABLE	(12/12/2018 - 04/02/2020)	
	Electrical legend:	Motor conduit			
	1649 8001 46	1	MOTOR CABLE	(12/12/2018 - 04/02/2020)	
	Electrical legend:	Motor conduit			
		1	DATALABEL	(12/12/2018 - 04/02/2020)	Label
	1079 9901 68	1	WARNING LABEL	(12/12/2018 - 04/02/2020)	Label
	1649 8005 00	0	LABEL	(12/12/2018 - 04/02/2020)	Label
	1900 5350 98	1	INVERTER	(12/12/2018 - 04/02/2020)	U1
	1631 2079 00	1	NANOPERMRING	(12/12/2018 - 04/02/2020)	
	Electrical legend:	Nanoperm ring			
	0697 9811 17	2	PLUG	(12/12/2018 - 04/02/2020)	
	Electrical legend:	Plug for transfo supply			
	0989 3700 48	2	NUT	(12/12/2018 - 04/02/2020)	
	Electrical legend:	Nut for transfo supply			
	0698 5140 72	1	CABLE GLAND	(12/12/2018 - 04/02/2020)	Fan
	0698 5140 71	1	CABLE GLAND	(12/12/2018 - 04/02/2020)	
	Electrical legend:	Ambient sensor			
	0697 9809 20	1	LOCKNUT	(12/12/2018 - 04/02/2020)	
	Electrical legend:	Ambient sensor			
	1089 9556 44	1	FAN WITH FILTER	(12/12/2018 - 04/02/2020)	Cubicle fan
	1089 9556 72	4	AIR INLET WITJOUT FILTER	(12/12/2018 - 04/02/2020)	Filter grid
	1088 0032 09	1	CONNECTOR	(12/12/2018 - 04/02/2020)	X3
	1089 9572 04	1	LINE FILTER	(12/12/2018 - 04/02/2020)	Z1 for 110kw
	Electrical legend:	Z1 for 110kw			
	1089 9562 04	1	STRAP	(12/12/2018 - 04/02/2020)	HF-screen
	1089 9514 56	1	TRANSFORMER	(12/12/2018 - 04/02/2020)	T1
	1089 9522 26	1	CIRCUIT BREAKER	(12/12/2018 - 04/02/2020)	F1
	1089 9513 41	1	BUTTON PUSH	(12/12/2018 - 04/02/2020)	S3
	1089 9513 28	1	HOLDER	(12/12/2018 - 04/02/2020)	S3
	~~1089 9513 30~~	4	CONTACTOR	(12/12/2018 - 04/02/2020)	S3
	Substituted by:	1089 9513 04 - CONTACT BLOCK (quantity: 1)			
	1088 0031 02	1	CONNECTOR 2-POLE	(12/12/2018 - 17/02/2019)	
	1088 0039 07	3	TERMINAL	(12/12/2018 - 04/02/2020)	X152
	1088 0039 05	1	PLATE	(12/12/2018 - 04/02/2020)	X152
	1088 0039 26	1	CONNECTOR	(12/12/2018 - 04/02/2020)	
	Electrical legend:	X152 (remove coding pin 1,3)			

Legend:

FREQ:60HZ - Frequency:60 Hz
MOVOL:200V - Supply voltage:200 V
IDRY:Y - Integrated dryer:Yes
MOVOL:380V - Supply voltage:380 V
MODEL:GA110VP_16 - Model:GA 110VSD+

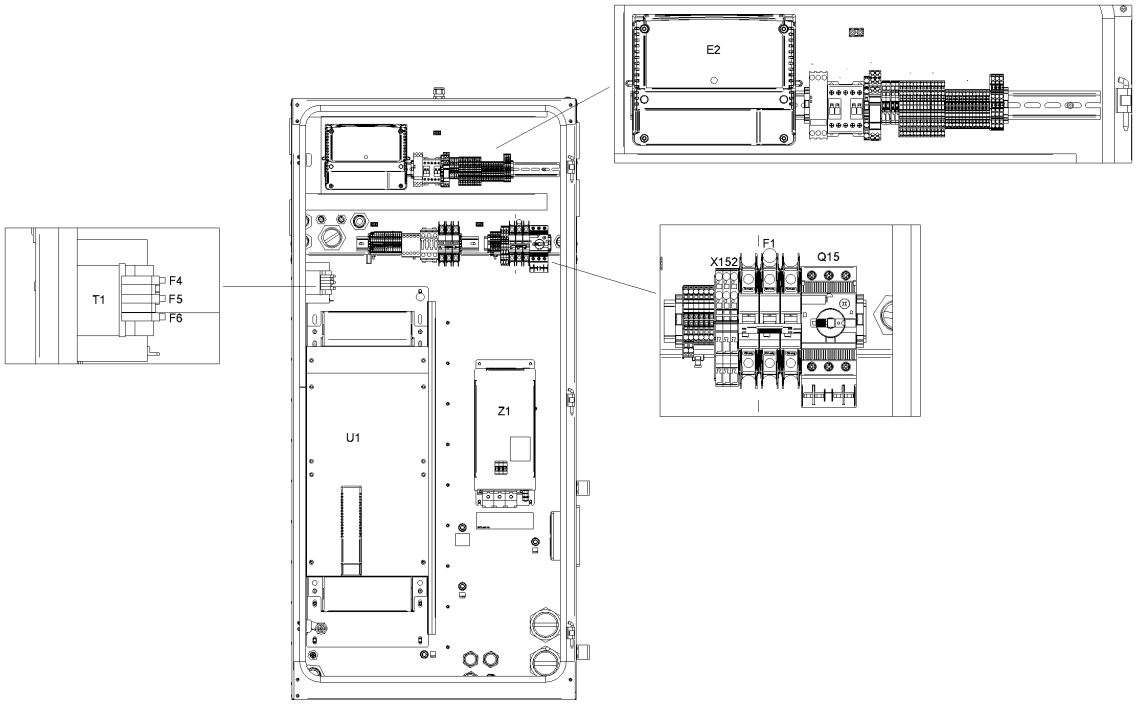
E2
T1
F4
F5
F6
U1
Z1
X152
F1
Q15

Ref	Part Number	Qty	Name	Validity	EL
	1088 0037 99	4	PIN	(12/12/2018 - 04/02/2020)	X152:1; 3
	~~1088 0031 81~~	7	END STOP BRACKET 6MM	(12/12/2018 - 04/02/2020)	
	Electrical legend:	Connector/terminal rail			
	Substituted by:	1089 0577 82 - END RETAINER (quantity: 1)			
	1088 0039 38	2	TERMINAL	(12/12/2018 - 04/02/2020)	1X11:2,5
	1088 0039 40	1	PLATE	(12/12/2018 - 04/02/2020)	1X11
	1088 0039 34	4	TERMINAL	(12/12/2018 - 04/02/2020)	
	Electrical legend:	1X11:30,301,34			
	1088 0039 35	1	PLATE	(12/12/2018 - 04/02/2020)	1X11
	1088 0039 04	2	TERMINAL	(12/12/2018 - 04/02/2020)	X104a
	1088 0037 99	2	PIN	(12/12/2018 - 04/02/2020)	X104a/X105
	1088 0039 02	1	PLATE	(12/12/2018 - 04/02/2020)	X104a
	1088 0039 07	2	TERMINAL	(12/12/2018 - 04/02/2020)	X105
	1088 0039 05	1	PLATE	(12/12/2018 - 04/02/2020)	X105
	1088 0039 34	13	TERMINAL	(12/12/2018 - 04/02/2020)	1X6
	1088 0037 69	3	CONNECTOR	(12/12/2018 - 04/02/2020)	1X7
	1088 0039 35	1	PLATE	(12/12/2018 - 04/02/2020)	1X6
	1088 0040 37	1	END PLATE	(12/12/2018 - 04/02/2020)	1X7
	1088 0039 36	9	TERMINAL	(12/12/2018 - 04/02/2020)	1X4
	1088 0039 36	4	TERMINAL	(12/12/2018 - 04/02/2020)	1X6
	1088 0039 37	1	END PLATE	(12/12/2018 - 04/02/2020)	1X4
	1088 0039 37	1	END PLATE	(12/12/2018 - 04/02/2020)	1X6
	1088 0039 37	1	END PLATE	(12/12/2018 - 04/02/2020)	1X1:Y/D
	1088 0037 81	1	CONNECTOR	(12/12/2018 - 04/02/2020)	2X27
	1088 0037 80	1	CONNECTOR	(12/12/2018 - 04/02/2020)	2X28
	1088 0031 32	1	CONNECTOR	(12/12/2018 - 04/02/2020)	2X30
	1088 0031 26	1	CONNECTOR 6-POLE	(12/12/2018 - 04/02/2020)	2X31
	~~1089 9664 06~~	1	SWITCH	(12/12/2018 - 04/02/2020)	Q15
	Substituted by:	1089 9551 97 - AUX.CONTACT CIRCUIT BREAKER (quantity: 1)			
	1089 9551 19	1	CIRCUIT BREAK.	(12/12/2018 - 04/02/2020)	Q15
	1088 0038 26	1	TERMINAL	(12/12/2018 - 04/02/2020)	1X1:Y/D
	1089 9602 79	1	CONTACTOR 110 V	(12/12/2018 - 04/02/2020)	K15
	1089 9461 26	1	PHASE SEQUENCE RELAY	(12/12/2018 - 04/02/2020)	K25
	1088 0032 17	1	RELAY 115 VAC	(12/12/2018 - 04/02/2020)	K5
	0991 8011 21	AR	CABLE TRAY	(12/12/2018 - 04/02/2020)	L=1384mm
	1900 2203 01	1	DRYER RAIL	(12/12/2018 - 04/02/2020)	
	Electrical legend:	With trafo on dryer			
	1088 0031 13	1	CONNECTOR 13-POLE	(12/12/2018 - 04/02/2020)	1X30
	1088 0037 82	1	CONNECTOR	(12/12/2018 - 04/02/2020)	3X34
	0697 9811 13	1	PLUG	(12/12/2018 - 04/02/2020)	
	Electrical legend:	Energy recovery			
	0989 3700 44	1	LOCKNUT	(12/12/2018 - 04/02/2020)	
	Electrical legend:	Energy recovery			
	0697 9811 12	1	PLUG	(12/12/2018 - 04/02/2020)	
	Electrical legend:	Control circuit of T10			
	0989 3700 43	1	NUT	(12/12/2018 - 04/02/2020)	
	Electrical legend:	Control circuit of T10			
	0697 9811 10	1	PLUG	(12/12/2018 - 04/02/2020)	
	Electrical legend:	Plug for smartbox hole			
	0989 3700 41	1	LOCKNUT	(12/12/2018 - 04/02/2020)	
	Electrical legend:	Nut for smartbox hole			

Legend:

FREQ:60HZ - Frequency:60 Hz
MOVOL:200V - Supply voltage:200 V
IDRY:Y - Integrated dryer:Yes
MOVOL:380V - Supply voltage:380 V
MODEL:GA110VP_16 - Model:GA 110VSD+

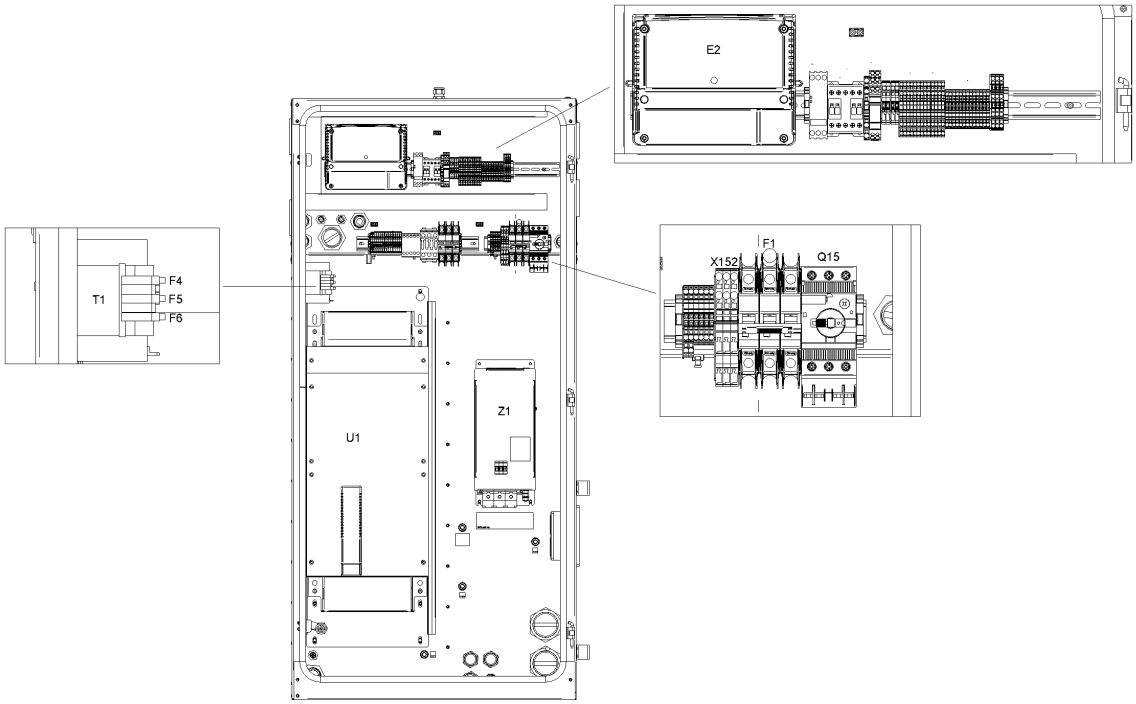
E2
T1
F4
F5
F6
X152
F1
Q15
U1
Z1

Ref	Part Number	Qty	Name	Validity	EL
	1900 2202 55	1	CUBICLE	(05/02/2020 - ...)	
	9820 3000 31	1	ASSEMBLY DRAWING	(05/02/2020 - ...)	AD
	9820 3000 27	1	SERVICE DIAGRAM	(05/02/2020 - ...)	SD
	1622 3798 72	1	WIRE HARNESS	(05/02/2020 - ...)	Comm Cable
	1622 5099 04	1	DI CHANE CABLE (1400MM)	(05/02/2020 - ...)	
	Electrical legend:	Comm Cable Loose supply			
	1649 8006 00	1	CUBICLE	(05/02/2020 - ...)	MSA
	1649 8001 31	1	PLATE NEOS "E"	(05/02/2020 - ...)	
	Electrical legend:	Mounting plate			
	1649 8003 85	1	MOUNTING PLATE	(05/02/2020 - ...)	
	Electrical legend:	Mounting plate			
	1649 8002 39	1	WIRE HARNESS	(05/02/2020 - ...)	WH
	1649 8002 40	1	WIRE HARNESS	(05/02/2020 - ...)	WH
	1649 8002 72	1	CABLE POWER	(05/02/2020 - ...)	
	Electrical legend:	Full feature (FF) Drain			
	1649 8002 73	1	WIRE HARNESS	(05/02/2020 - ...)	
	Electrical legend:	Pack Drain + Air filter switch			
	1649 8002 75	1	WIRE HARNESS	(05/02/2020 - ...)	
	Electrical legend:	Relative Humidity sensor			
	1649 8001 43	3	MOTOR CABLE	(05/02/2020 - ...)	
	Electrical legend:	Motor conduit			
	1649 8001 46	1	MOTOR CABLE	(05/02/2020 - ...)	
	Electrical legend:	Motor conduit			
	1625 3906 31	1	DATA LABEL	(05/02/2020 - ...)	Label
	1079 9901 68	1	WARNING LABEL	(05/02/2020 - ...)	Label
	1649 8005 00	0	LABEL	(05/02/2020 - ...)	Label
	1900 5350 98	1	INVERTER	(05/02/2020 - ...)	U1
	1631 2079 00	1	NANOPERMRING	(05/02/2020 - ...)	
	Electrical legend:	Nanoperm ring			
	0697 9811 17	2	PLUG	(05/02/2020 - ...)	
	Electrical legend:	Plug for transfo supply			
	0989 3700 48	2	NUT	(05/02/2020 - ...)	
	Electrical legend:	Nut for transfo supply			
	0698 5140 72	1	CABLE GLAND	(05/02/2020 - ...)	Fan
	0698 5140 71	1	CABLE GLAND	(05/02/2020 - ...)	
	Electrical legend:	Ambient sensor			
	0697 9809 20	1	LOCKNUT	(05/02/2020 - ...)	
	Electrical legend:	Ambient sensor			
	1089 9556 44	1	FAN WITH FILTER	(05/02/2020 - ...)	Cubicle fan
	1089 9556 72	4	AIR INLET WITHOUT FILTER	(05/02/2020 - ...)	Filter grid
	1088 0032 09	1	CONNECTOR	(05/02/2020 - ...)	X3
	1089 9572 04	1	LINE FILTER	(05/02/2020 - ...)	Z1 for 110kw
	Electrical legend:	Z1 for 110kw			
	1089 9562 04	1	STRAP	(05/02/2020 - ...)	HF-screen
	1089 9514 56	1	TRANSFORMER	(05/02/2020 - ...)	T1
	1089 9522 26	1	CIRCUIT BREAKER	(05/02/2020 - ...)	F1
	1089 9513 41	1	PUSH BUTTON	(05/02/2020 - ...)	S3
	1089 9513 28	1	HOLDER	(05/02/2020 - ...)	S3
	~~1089 9513 30~~	4	CONTACTOR	(05/02/2020 - ...)	S3
	Substituted by:	1089 9513 04 - CONTACT BLOCK (quantity: 1)			
	1088 0039 07	3	TERMINAL	(05/02/2020 - ...)	X152
	1088 0039 05	1	PLATE	(05/02/2020 - ...)	X152
	1088 0039 26	1	CONNECTOR	(05/02/2020 - ...)	
	Electrical legend:	X152 (remove coding pin 1,3)			
	1088 0037 99	4	PIN	(05/02/2020 - ...)	X152:1; 3
	~~1088 0031 81~~	7	END STOP BRACKET 6MM	(05/02/2020 - ...)	

Legend:

FREQ:60HZ - Frequency:60 Hz
IDRY:Y - Integrated dryer:Yes
MODEL:GA110VP_16 - Model:GA 110VSD+
MOVOL:200V - Supply voltage:200 V
MOVOL:380V - Supply voltage:380 V

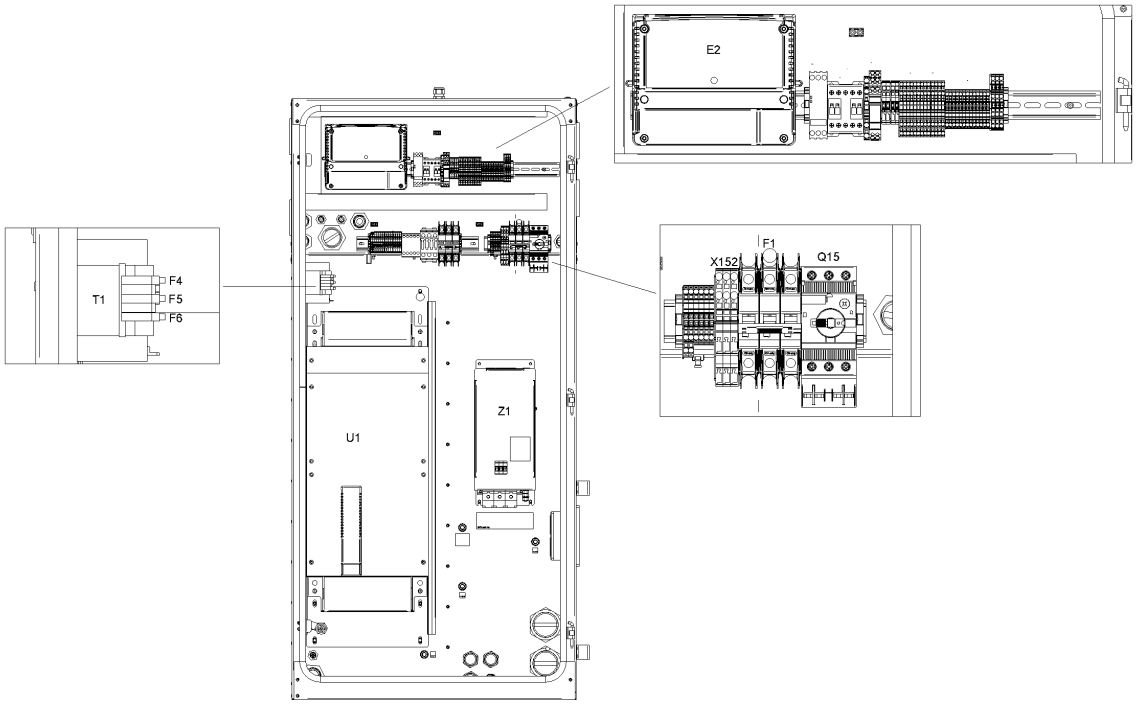
E2
T1
F4
F5
F6
X152
F1
Q15
U1
Z1

Ref	Part Number	Qty	Name	Validity	EL
	Electrical legend:	Connector/terminal rail			
	Substituted by:	1089 0577 82 - END RETAINER (quantity: 1)			
	1088 0039 38	2	TERMINAL	(05/02/2020 - ...)	1X11:2,5
	1088 0039 40	1	PLATE	(05/02/2020 - ...)	1X11
	1088 0039 34	4	TERMINAL	(05/02/2020 - ...)	
	Electrical legend:	1X11:30,301,34			
	1088 0039 35	1	PLATE	(05/02/2020 - ...)	1X11
	1088 0039 04	2	TERMINAL	(05/02/2020 - ...)	X104a
	1088 0037 99	2	PIN	(05/02/2020 - ...)	X104a/X105
	1088 0039 02	1	PLATE	(05/02/2020 - ...)	X104a
	1088 0039 07	2	TERMINAL	(05/02/2020 - ...)	X105
	1088 0039 05	1	PLATE	(05/02/2020 - ...)	X105
	1088 0039 34	13	TERMINAL	(05/02/2020 - ...)	1X6
	1088 0037 69	3	CONNECTOR	(05/02/2020 - ...)	1X7
	1088 0039 35	1	PLATE	(05/02/2020 - ...)	1X6
	1088 0040 37	1	END PLATE	(05/02/2020 - ...)	1X7
	1088 0039 36	9	TERMINAL	(05/02/2020 - ...)	1X4
	1088 0039 36	4	TERMINAL	(05/02/2020 - ...)	1X6
	1088 0039 37	1	END PLATE	(05/02/2020 - ...)	1X4
	1088 0039 37	1	END PLATE	(05/02/2020 - ...)	1X6
	1088 0039 37	1	END PLATE	(05/02/2020 - ...)	1X1:Y/D
	1088 0037 81	1	CONNECTOR	(05/02/2020 - ...)	2X27
	1088 0037 80	1	CONNECTOR	(05/02/2020 - ...)	2X28
	1088 0031 32	1	CONNECTOR	(05/02/2020 - ...)	2X30
	1088 0031 26	1	CONNECTOR 6-POLE	(05/02/2020 - ...)	2X31
	~~1089 9664 06~~	1	SWITCH	(05/02/2020 - ...)	Q15
	Substituted by:	1089 9551 97 - AUX.CONTACT CIRCUIT BREAKER (quantity: 1)			
	1089 9551 19	1	CIRCUIT BREAKER	(05/02/2020 - ...)	Q15
	1088 0038 26	1	TERMINAL	(05/02/2020 - ...)	1X1:Y/D
	1089 9602 79	1	CONTACTOR 110 V	(05/02/2020 - ...)	K15
	1089 9461 26	1	PHASE SEQUENCE RELAY	(05/02/2020 - ...)	K25
	1088 0032 17	1	RELAY 115 VAC	(05/02/2020 - ...)	K5
	0991 8011 21	AR	CABLE TRAY	(05/02/2020 - ...)	L=1384mm
	1900 2203 01	1	DRYER RAIL	(05/02/2020 - ...)	
	Electrical legend:	With trafo on dryer			
	1088 0031 13	1	CONNECTOR 13-POLE	(05/02/2020 - ...)	1X30
	1088 0037 82	1	CONNECTOR	(05/02/2020 - ...)	3X34
	0697 9811 13	1	PLUG	(05/02/2020 - ...)	
	Electrical legend:	Energy recovery			
	0989 3700 44	1	LOCKNUT	(05/02/2020 - ...)	
	Electrical legend:	Energy recovery			
	0697 9811 12	1	PLUG	(05/02/2020 - ...)	
	Electrical legend:	Control circuit of T10			
	0989 3700 43	1	NUT	(05/02/2020 - ...)	
	Electrical legend:	Control circuit of T10			
	0697 9811 10	1	PLUG	(05/02/2020 - ...)	
	Electrical legend:	Plug for smartbox hole			
	0989 3700 41	1	LOCKNUT	(05/02/2020 - ...)	
	Electrical legend:	Nut for smartbox hole			
	1089 9556 37	1	AIR INLET WITH FILTER	(05/02/2020 - ...)	Fan Filter

Legend:

FREQ:60HZ - Frequency:60 Hz
IDRY:Y - Integrated dryer:Yes
MODEL:GA110VP_16 - Model:GA 110VSD+
MOVOL:200V - Supply voltage:200 V
MOVOL:380V - Supply voltage:380 V

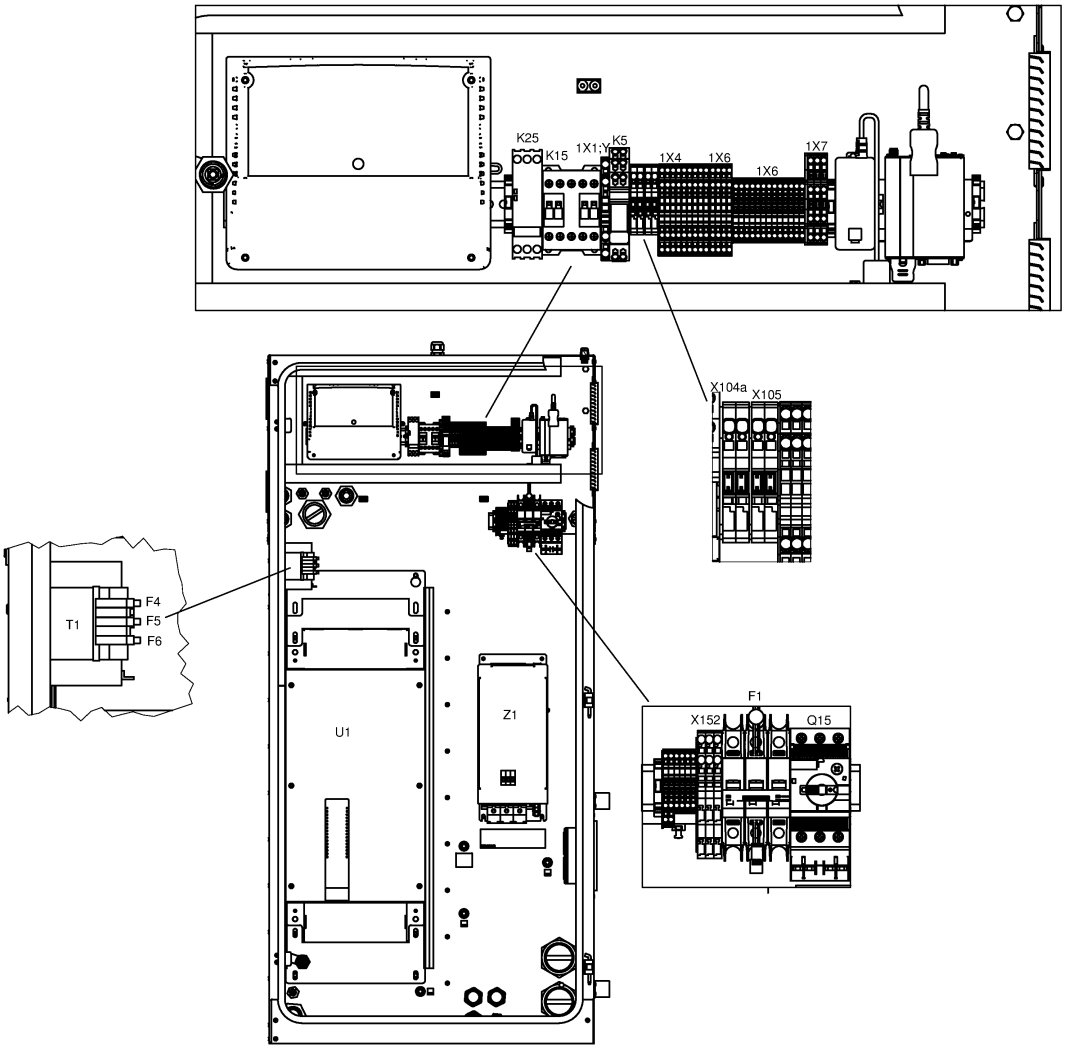
K25
K15
1X1
K5
1X4
1X6
1X6
1X7
X104a
X105
T1
F4
F5
F6
U1
Z1
F1
X152
Q15

26.19 - IT Ancillaries GA 75L VSD+ - 200V-400V-500V/50Hz, 200V-230V-380V-460V-575V/60Hz - Pack (17/10/2017 - 11/12/2018)

((MOVOL:200V , MOVOL:230V , MOVOL:380V , MOVOL:460V , MOVOL:575V) + FREQ:60HZ , (MOVOL:200V , MOVOL:400V , MOVOL:500V) + FREQ:50HZ) + IDRY:N + MODEL:GA75VP_16

Ref	Part Number	Qty	Name	Validity	EL
	1900 2202 02	1	CUBICLE	(17/10/2017 - 11/12/2018)	
	9820 3000 21	1	CUBICLE LAYOUT	(17/10/2017 - 11/12/2018)	-
	9820 3000 22	1	SERVICE DIAGRAM	(17/10/2017 - 11/12/2018)	-
	1622 3798 70	1	WIRE HARNESS COMM CABLE	(17/10/2017 - 11/12/2018)	-
	1622 5099 04	1	DI CHANE CABLE (1400MM)	(17/10/2017 - 11/12/2018)	
	Electrical legend:	Comm Cable Loose supply			
	1649 8001 22	1	CUBICLE	(17/10/2017 - 11/12/2018)	-
•	1202 6584 02	1	SEAL		-
	1649 8001 32	1	PLATE NEOS "D"	(17/10/2017 - 11/12/2018)	-
	1649 8003 85	1	MOUNTING PLATE	(17/10/2017 - 11/12/2018)	-
	1649 8002 39	1	WIRE HARNESS	(17/10/2017 - 11/12/2018)	-
	1649 8002 40	1	WIRE HARNESS	(17/10/2017 - 11/12/2018)	-
	1649 8002 73	1	WIRE HARNESS	(17/10/2017 - 11/12/2018)	
	Electrical legend:	Pack Drain + Air filter switch			
	1649 8002 75	1	WIRE HARNESS	(17/10/2017 - 11/12/2018)	
	Electrical legend:	Relative Humidity sensor			
	1649 8001 45	3	MOTOR CABLE	(17/10/2017 - 11/12/2018)	-
	1649 8001 48	1	MOTOR CABLE	(17/10/2017 - 11/12/2018)	-
		1	DATA LABEL	(17/10/2017 - 01/02/2018)	-
		1	DATA LABEL	(02/02/2018 - 11/12/2018)	-
	1079 9901 68	1	WARNING LABEL	(17/10/2017 - 11/12/2018)	-
	1900 5350 95	1	INVERTER	(17/10/2017 - 11/12/2018)	U1
	1631 2079 00	1	NANOPERMRING	(17/10/2017 - 11/12/2018)	-
	0697 9811 17	2	PLUG	(17/10/2017 - 11/12/2018)	
	Electrical legend:	Plug for transfo supply			
	0989 3700 48	2	NUT	(17/10/2017 - 11/12/2018)	
	Electrical legend:	Nut for transfo supply			
	0698 5140 72	1	CABLE GLAND	(17/10/2017 - 11/12/2018)	Fan
	0698 5140 71	1	CABLE GLAND	(17/10/2017 - 11/12/2018)	
	Electrical legend:	Ambient sensor			
	0697 9809 20	1	LOCKNUT	(17/10/2017 - 11/12/2018)	
	Electrical legend:	Ambient sensor			
	1089 9556 44	1	FAN WITH FILTER	(17/10/2017 - 11/12/2018)	Cubicle fan
		4	AIR INLET W/O FILTER	(17/10/2017 - 11/12/2018)	-
	Service kits:	2901 9901 01 - PREVENTIVE MAINTENANCE KIT - GA 75L VSD+ 2901 9900 95 - AIR FILTER KIT - GA 75L VSD+			
	1088 0032 09	1	CONNECTOR	(17/10/2017 - 11/12/2018)	X3
	1089 9572 05	1	LINE FILTER	(17/10/2017 - 11/12/2018)	Z1 for 75 kw
	Electrical legend:	Z1 for 75 kw			
	1089 9562 04	1	STRAP	(17/10/2017 - 11/12/2018)	HF-screen
	1089 9514 56	1	TRANSFORMER	(17/10/2017 - 11/12/2018)	T1
	1089 9522 26	1	CIRCUIT BREAKER	(17/10/2017 - 11/12/2018)	F1
	1089 9513 41	1	PUSH BUTTON	(17/10/2017 - 11/12/2018)	S3
	1089 9513 28	1	HOLDER	(17/10/2017 - 11/12/2018)	S3
	~~1089 9513 30~~	4	CONTACTOR	(17/10/2017 - 11/12/2018)	S3
	Substituted by:	1089 9513 04 - CONTACT BLOCK (quantity: 1)			
	1088 0031 02	1	CONNECTOR 2-POLE	(17/10/2017 - 11/12/2018)	
	Electrical legend:	X153 (Smartbox)			
	1088 0039 07	3	TERMINAL	(17/10/2017 - 11/12/2018)	X152
	1088 0039 05	1	PLATE	(17/10/2017 - 11/12/2018)	X152
	1088 0039 26	1	CONNECTOR	(17/10/2017 - 11/12/2018)	
	Electrical legend:	X152 (remove coding pin 1,3)			
	1088 0037 99	4	PIN	(17/10/2017 - 11/12/2018)	X152:1; 3

Legend:

FREQ:50HZ - Frequency:50 Hz
FREQ:60HZ - Frequency:60 Hz
IDRY:N - Integrated dryer:No
MODEL:GA75VP_16 - Model:GA 75VSD+
MOVOL:200V - Supply voltage:200 V
MOVOL:230V - Supply voltage:230 V
MOVOL:380V - Supply voltage:380 V
MOVOL:400V - Supply voltage:400 V
MOVOL:460V - Supply voltage:460 V
MOVOL:500V - Supply voltage:500 V
MOVOL:575V - Supply voltage:575 V

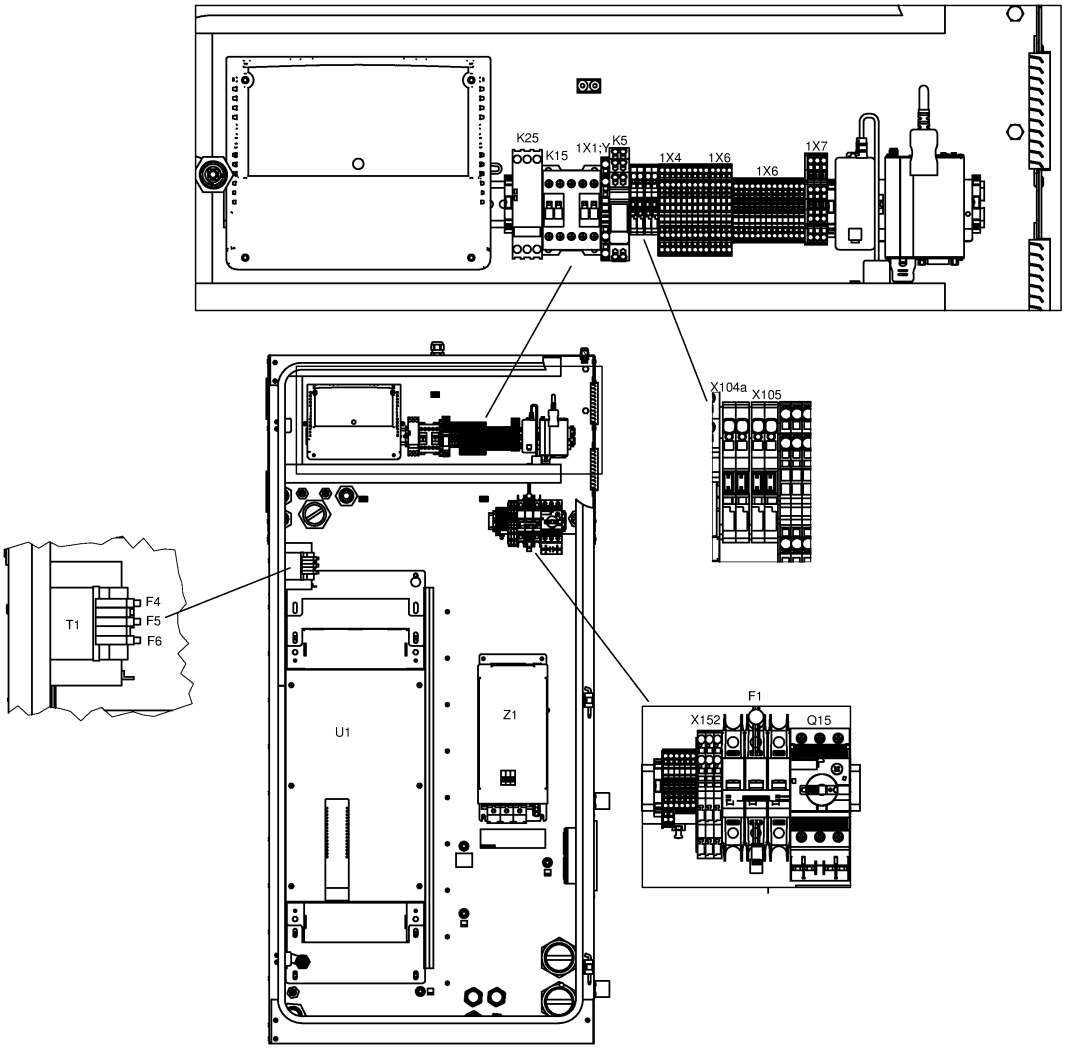
K25
K15
1X1;
K5
1X4
1X6
1X6
1X7
X104a
X105
T1
F4
F5
F6
U1
Z1
F1
X152
Q15

26.19 - IT Ancillaries GA 75L VSD+ - 200V-400V-500V/50Hz, 200V-230V-380V-460V-575V/60Hz - Pack (17/10/2017 - 11/12/2018)

((MOVOL:200V , MOVOL:230V , MOVOL:380V , MOVOL:460V , MOVOL:575V) + FREQ:60HZ , (MOVOL:200V , MOVOL:400V , MOVOL:500V) + FREQ:50HZ) + IDRY:N + MODEL:GA75VP_16

Ref	Part Number	Qty	Name	Validity	EL
	~~1088 0031 81~~	7	END STOP BRACKET 6MM	(17/10/2017 - 11/12/2018)	
	Electrical legend:	Connector/terminal rail			
	Substituted by:	1089 0577 82 - END RETAINER (quantity: 1)			
	1088 0039 38	2	TERMINAL	(17/10/2017 - 11/12/2018)	1X11:2,5
	1088 0039 40	1	PLATE	(17/10/2017 - 11/12/2018)	1X11
	1088 0039 34	4	TERMINAL	(17/10/2017 - 11/12/2018)	
	Electrical legend:	1X11:30,301,34			
	1088 0039 35	1	PLATE	(17/10/2017 - 11/12/2018)	1X11
	1088 0039 04	2	TERMINAL	(17/10/2017 - 11/12/2018)	X104a
	1088 0037 99	2	PIN	(17/10/2017 - 11/12/2018)	X104a/X105
	1088 0039 02	1	PLATE	(17/10/2017 - 11/12/2018)	X104a
	1088 0039 04	2	TERMINAL	(17/10/2017 - 11/12/2018)	
	1088 0039 02	1	PLATE	(17/10/2017 - 11/12/2018)	
	1088 0039 34	13	TERMINAL	(17/10/2017 - 11/12/2018)	1X6
	1088 0037 69	3	CONNECTOR	(17/10/2017 - 11/12/2018)	1X7
	1088 0039 35	1	PLATE	(17/10/2017 - 11/12/2018)	1X6
	1088 0040 37	1	END PLATE	(17/10/2017 - 11/12/2018)	1X7
	1088 0039 36	9	TERMINAL	(17/10/2017 - 11/12/2018)	1X4
	1088 0039 36	4	TERMINAL	(17/10/2017 - 11/12/2018)	1X6
	1088 0039 37	1	END PLATE	(17/10/2017 - 11/12/2018)	1X4
	1088 0039 37	1	END PLATE	(17/10/2017 - 11/12/2018)	1X6
	1088 0039 37	1	END PLATE	(17/10/2017 - 11/12/2018)	1X1:Y/D
	1088 0037 81	1	CONNECTOR	(17/10/2017 - 11/12/2018)	2X27
	1088 0037 80	1	CONNECTOR	(17/10/2017 - 11/12/2018)	2X28
	1088 0031 32	1	CONNECTOR	(17/10/2017 - 11/12/2018)	2X30
	1088 0031 26	1	CONNECTOR 6-POLE	(17/10/2017 - 11/12/2018)	2X31
	~~1089 9664 06~~	1	SWITCH	(17/10/2017 - 11/12/2018)	Q15
	Substituted by:	1089 9551 97 - AUX.CONTACT CIRCUIT BREAKER (quantity: 1)			
	1089 9551 18	1	CIRCUIT BREAKER	(17/10/2017 - 11/12/2018)	Q15
	1088 0038 26	1	TERMINAL	(17/10/2017 - 11/12/2018)	1X1:Y/D
	1089 9602 79	1	CONTACTOR 110 V	(17/10/2017 - 11/12/2018)	K15
	1089 9461 26	1	PHASE SEQUENCE RELAY	(17/10/2017 - 11/12/2018)	K25
	1088 0032 17	1	RELAY 115 VAC	(17/10/2017 - 11/12/2018)	K5
	0991 8011 21	AR	CABLE TRAY	(17/10/2017 - 11/12/2018)	L=1384mm
	0697 9811 16	1	PLUG M50	(17/10/2017 - 11/12/2018)	
	Electrical legend:	Plug for Dryer			
	0989 3700 47	1	LOCKNUT	(17/10/2017 - 11/12/2018)	
	Electrical legend:	Locknut for dryer			
	0697 9811 11	2	PLUG	(17/10/2017 - 11/12/2018)	
	Electrical legend:	Plug for FF Drain/LAT			
	0989 3700 42	2	NUT	(17/10/2017 - 11/12/2018)	
	Electrical legend:	Locknut for FF Drain/LAT			
	1088 0031 13	1	CONNECTOR 13-POLE	(17/10/2017 - 11/12/2018)	1X30
	1088 0037 82	1	CONNECTOR	(17/10/2017 - 11/12/2018)	3X34
	0697 9811 13	1	PLUG M25	(17/10/2017 - 11/12/2018)	
	Electrical legend:	Energy recovery			
	0989 3700 44	1	LOCKNUT	(17/10/2017 - 11/12/2018)	
	Electrical legend:	Energy recovery			
	0697 9811 12	1	PLUG	(17/10/2017 - 11/12/2018)	
	Electrical legend:	Control circuit of T10			
	0989 3700 43	1	NUT	(17/10/2017 - 11/12/2018)	
	Electrical legend:	Control circuit of T10			

Legend:

FREQ:50HZ - Frequency:50 Hz
FREQ:60HZ - Frequency:60 Hz
IDRY:N - Integrated dryer:No
MODEL:GA75VP_16 - Model:GA 75VSD+
MOVOL:200V - Supply voltage:200 V
MOVOL:230V - Supply voltage:230 V
MOVOL:380V - Supply voltage:380 V
MOVOL:400V - Supply voltage:400 V
MOVOL:460V - Supply voltage:460 V
MOVOL:500V - Supply voltage:500 V
MOVOL:575V - Supply voltage:575 V

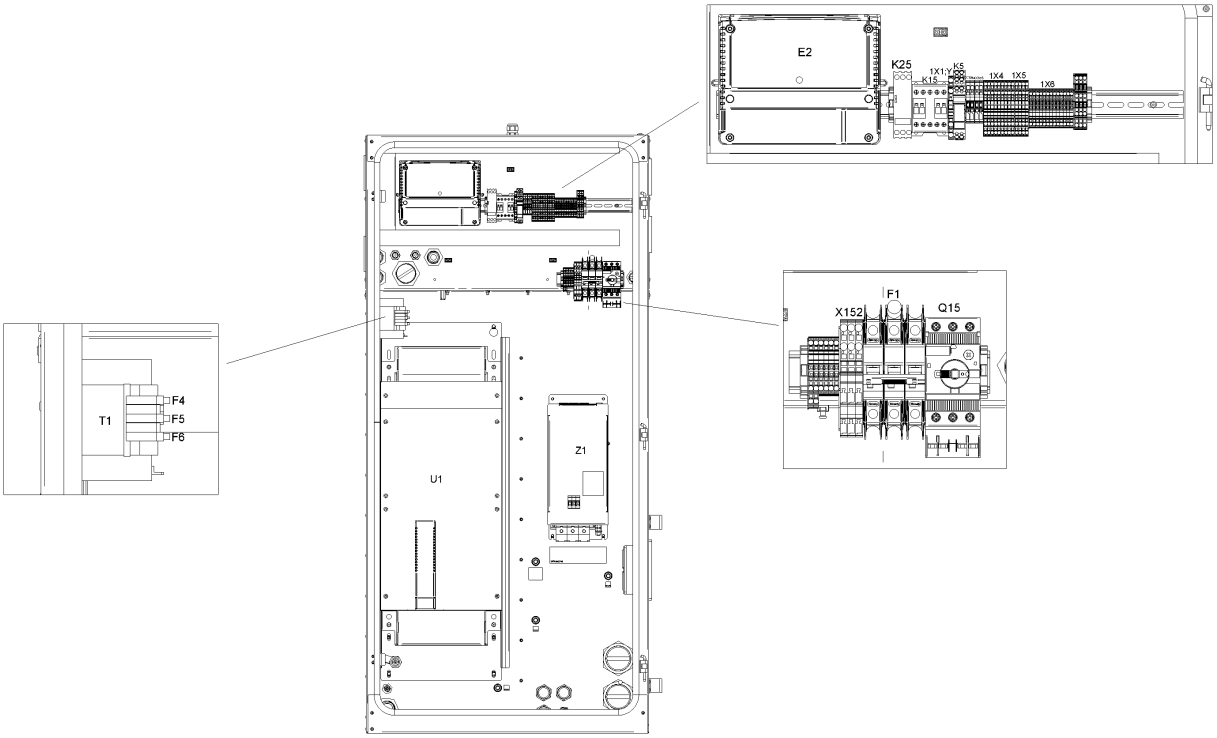
E2
K25
K15
1X1:Y
K5
1X4
1X5
1X6
F1
X152
Q15
T1
F4
F5
F6
U1
Z1

26.20 - IT Ancillaries GA 75L VSD+ - 200V-400V-500V/50Hz, 200V-230V-380V-460V-575V/60Hz - Pack (12/12/2018 - 27/11/2019)

((MOVOL:200V , MOVOL:230V , MOVOL:380V , MOVOL:460V , MOVOL:575V) + FREQ:60HZ , (MOVOL:200V , MOVOL:400V , MOVOL:500V) + FREQ:50HZ) + IDRY:N + MODEL:GA75VP_16

Ref	Part Number	Qty	Name	Validity	EL
	1900 2202 22	1	CUBICLE	(12/12/2018 - ...)	
	9820 3000 31	1	ASSEMBLY DRAWING	(12/12/2018 - 27/11/2019)	AD
	9820 3000 27	1	SERVICE DIAGRAM	(12/12/2018 - 27/11/2019)	SD
	1622 3798 72	1	WIRE HARNESS	(12/12/2018 - 27/11/2019)	Comm Cable
	1622 5099 04	1	DI CHANE CABLE (1400MM)	(12/12/2018 - 27/11/2019)	
	Electrical legend:	Comm Cable Loose supply			
	1649 8001 22	1	CUBICLE MSA	(12/12/2018 - 27/11/2019)	MSA
	1649 8001 32	1	PLATE NEOS "D"	(12/12/2018 - 27/11/2019)	
	Electrical legend:	Mounting plate			
	1649 8003 85	1	MOUNTING PLATE	(12/12/2018 - 27/11/2019)	
	Electrical legend:	Mounting plate			
	1649 8002 39	1	WIRE HARNESS	(12/12/2018 - 27/11/2019)	WH
	1649 8002 40	1	WIRE HARNESS	(12/12/2018 - 27/11/2019)	WH
	1649 8002 73	1	WIRE HARNESS	(12/12/2018 - 27/11/2019)	
	Electrical legend:	Pack Drain + Air filter switch			
	1649 8002 75	1	WIRE HARNESS	(12/12/2018 - 27/11/2019)	
	Electrical legend:	Relative Humidity sensor			
	1649 8001 45	3	MOTOR CABLE	(12/12/2018 - 27/11/2019)	
	Electrical legend:	Motor conduit			
	1649 8001 48	1	MOTOR CABLE	(12/12/2018 - 27/11/2019)	
	Electrical legend:	Motor conduit			
		1	DATALABEL	(12/12/2018 - 27/11/2019)	Label
	1079 9901 68	1	WARNING LABEL	(12/12/2018 - 27/11/2019)	Label
	1649 8005 00	0	LABEL	(12/12/2018 - 27/11/2019)	Label
	1900 5350 95	1	INVERTER	(12/12/2018 - 27/11/2019)	U1
	1631 2079 00	1	NANOPERMRING	(12/12/2018 - 27/11/2019)	
	Electrical legend:	Nanoperm ring			
	0697 9811 17	2	PLUG	(12/12/2018 - 27/11/2019)	
	Electrical legend:	Plug for transfo supply			
	0989 3700 48	2	NUT	(12/12/2018 - 27/11/2019)	
	Electrical legend:	Nut for transfo supply			
	0698 5140 72	1	CABLE GLAND	(12/12/2018 - 27/11/2019)	Fan
	0698 5140 71	1	CABLE GLAND	(12/12/2018 - 27/11/2019)	
	Electrical legend:	Ambient sensor			
	0697 9809 20	1	LOCKNUT	(12/12/2018 - 27/11/2019)	
	Electrical legend:	Ambient sensor			
	1089 9556 44	1	FAN WITH FILTER	(12/12/2018 - 27/11/2019)	Cubicle fan
	1089 9556 72	4	AIR INLET WITHOUT FILTER	(12/12/2018 - 27/11/2019)	Filter grid
	1088 0032 09	1	CONNECTOR	(12/12/2018 - 27/11/2019)	X3
	1089 9572 05	1	LINE FILTER	(12/12/2018 - 27/11/2019)	Z1 for 75 kw
	Electrical legend:	Z1 for 75 kw			
	1089 9562 04	1	STRAP	(12/12/2018 - 27/11/2019)	HF-screen
	1089 9514 56	1	TRANSFORMER	(12/12/2018 - 27/11/2019)	T1
	1089 9522 26	1	CIRCUIT BREAKER	(12/12/2018 - 27/11/2019)	F1
	1089 9513 41	1	PUSH BUTTON	(12/12/2018 - 27/11/2019)	S3
	1089 9513 28	1	HOLDER	(12/12/2018 - 27/11/2019)	S3
	~~1089 9513 30~~	4	CONTACTOR	(12/12/2018 - 27/11/2019)	S3
	Substituted by:	1089 9513 04 - CONTACT BLOCK (quantity: 1)			
	1088 0031 02	1	CONNECTOR 2-POLE	(12/12/2018 - 17/02/2019)	
	1088 0039 07	3	TERMINAL	(12/12/2018 - 27/11/2019)	X152
	1088 0039 05	1	PLATE	(12/12/2018 - 27/11/2019)	X152
	1088 0039 26	1	CONNECTOR	(12/12/2018 - 27/11/2019)	
	Electrical legend:	X152 (remove coding pin 1,3)			
	1088 0037 99	4	PIN	(12/12/2018 - 27/11/2019)	X152:1; 3

Legend:

FREQ:50HZ - Frequency:50 Hz
FREQ:60HZ - Frequency:60 Hz
IDRY:N - Integrated dryer:No
MODEL:GA75VP_16 - Model:GA 75VSD+
MOVOL:200V - Supply voltage:200 V
MOVOL:230V - Supply voltage:230 V
MOVOL:380V - Supply voltage:380 V
MOVOL:400V - Supply voltage:400 V
MOVOL:460V - Supply voltage:460 V
MOVOL:500V - Supply voltage:500 V
MOVOL:575V - Supply voltage:575 V

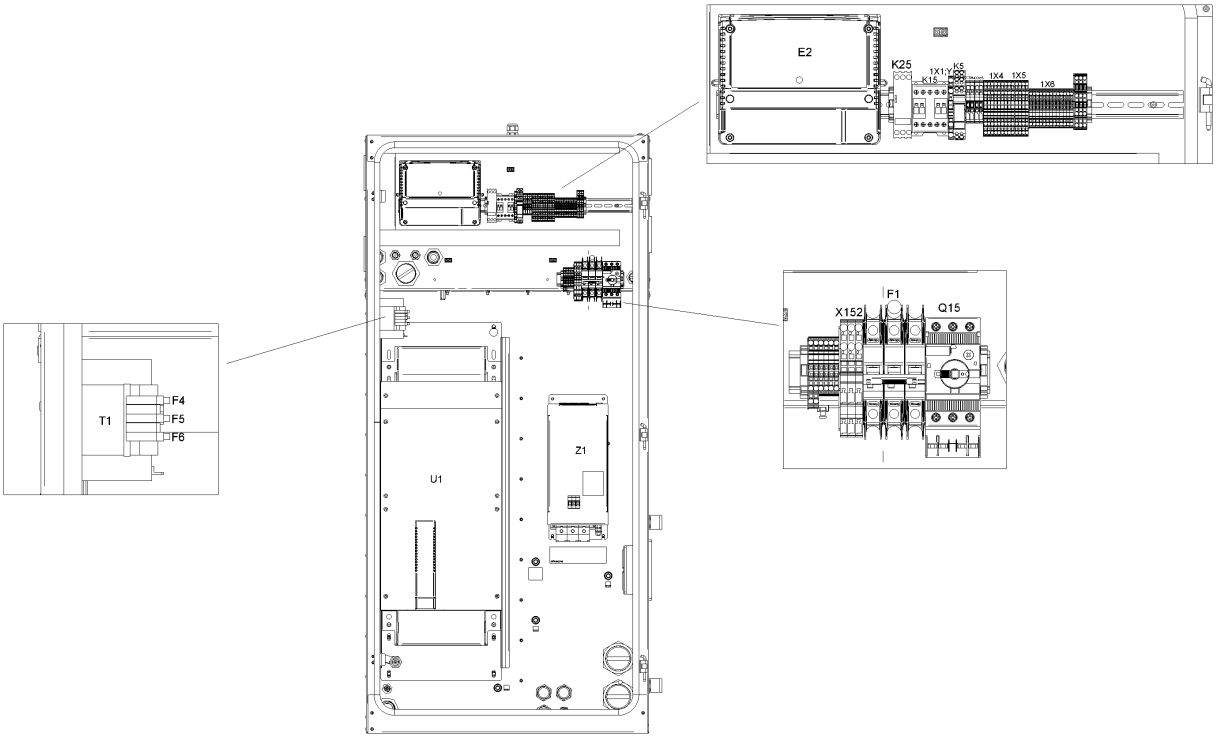
E2
K25
K15
1X1:Y
K5
1X4
1X5
1X6
T1
F4
F5
F6
U1
Z1
F1
X152
Q15

Ref	Part Number	Qty	Name	Validity	EL
	~~1088 0031 81~~	7	END STOP BRACKET 6MM	(12/12/2018 - 27/11/2019)	
	Electrical legend:	Connector/terminal rail			
	Substituted by:	1089 0577 82 - END RETAINER (quantity: 1)			
	1088 0039 38	2	TERMINAL	(12/12/2018 - 27/11/2019)	1X11:2,5
	1088 0039 40	1	PLATE	(12/12/2018 - 27/11/2019)	1X11
	1088 0039 34	4	TERMINAL	(12/12/2018 - 27/11/2019)	
	Electrical legend:	1X11:30,301,34			
	1088 0039 35	1	PLATE	(12/12/2018 - 27/11/2019)	1X11
	1088 0039 04	2	TERMINAL	(12/12/2018 - 27/11/2019)	X104a
	1088 0037 99	2	PIN	(12/12/2018 - 27/11/2019)	X104a/X105
	1088 0039 02	1	PLATE	(12/12/2018 - 27/11/2019)	X104a
	1088 0039 07	2	TERMINAL	(12/12/2018 - 27/11/2019)	X105
	1088 0039 05	1	PLATE	(12/12/2018 - 27/11/2019)	X105
	1088 0039 34	13	TERMINAL	(12/12/2018 - 27/11/2019)	1X6
	1088 0037 69	3	CONNECTOR	(12/12/2018 - 27/11/2019)	1X7
	1088 0039 35	1	PLATE	(12/12/2018 - 27/11/2019)	1X6
	1088 0040 37	1	END PLATE	(12/12/2018 - 27/11/2019)	1X7
	1088 0039 36	9	TERMINAL	(12/12/2018 - 27/11/2019)	1X4
	1088 0039 36	4	TERMINAL	(12/12/2018 - 27/11/2019)	1X6
	1088 0039 37	1	END PLATE	(12/12/2018 - 27/11/2019)	1X4
	1088 0039 37	1	END PLATE	(12/12/2018 - 27/11/2019)	1X6
	1088 0039 37	1	END PLATE	(12/12/2018 - 27/11/2019)	1X1:Y/D
	1088 0037 81	1	CONNECTOR	(12/12/2018 - 27/11/2019)	2X27
	1088 0037 80	1	CONNECTOR	(12/12/2018 - 27/11/2019)	2X28
	1088 0031 32	1	CONNECTOR	(12/12/2018 - 27/11/2019)	2X30
	1088 0031 26	1	CONNECTOR 6-POLE	(12/12/2018 - 27/11/2019)	2X31
	~~1089 9664 06~~	1	SWITCH	(12/12/2018 - 27/11/2019)	Q15
	Substituted by:	1089 9551 97 - AUX.CONTACT CIRCUIT BREAKER (quantity: 1)			
	1089 9551 18	1	CIRCUIT BREAKER	(12/12/2018 - 27/11/2019)	Q15
	1088 0038 26	1	TERMINAL	(12/12/2018 - 27/11/2019)	1X1:Y/D
	1089 9602 79	1	CONTACTOR 110 V	(12/12/2018 - 27/11/2019)	K15
	1089 9461 26	1	PHASE SEQUENCE RELAY	(12/12/2018 - 27/11/2019)	K25
	1088 0032 17	1	RELAY 115 VAC	(12/12/2018 - 27/11/2019)	K5
	0991 8011 21	AR	CABLE TRAY	(12/12/2018 - 27/11/2019)	L=1384mm
	0697 9811 16	1	PLUG	(12/12/2018 - 27/11/2019)	
	Electrical legend:	Plug for Dryer			
	0989 3700 47	1	LOCKNUT	(12/12/2018 - 27/11/2019)	
	Electrical legend:	Locknut for dryer			
	0697 9811 11	2	PLUG	(12/12/2018 - 27/11/2019)	
	Electrical legend:	Plug for FF Drain/LAT			
	0989 3700 42	2	NUT	(12/12/2018 - 27/11/2019)	
	Electrical legend:	Locknut for FF Drain/LAT			
	1088 0031 13	1	CONNECTOR 13-POLE	(12/12/2018 - 27/11/2019)	1X30
	1088 0037 82	1	CONNECTOR	(12/12/2018 - 27/11/2019)	3X34
	0697 9811 13	1	PLUG	(12/12/2018 - 27/11/2019)	
	Electrical legend:	Energy recovery			
	0989 3700 44	1	LOCKNUT	(12/12/2018 - 27/11/2019)	
	Electrical legend:	Energy recovery			
	0697 9811 12	1	PLUG	(12/12/2018 - 27/11/2019)	
	Electrical legend:	Control circuit of T10			
	0989 3700 43	1	NUT	(12/12/2018 - 27/11/2019)	
	Electrical legend:	Control circuit of T10			

Legend:

FREQ:50HZ - Frequency:50 Hz
FREQ:60HZ - Frequency:60 Hz
IDRY:N - Integrated dryer:No
MODEL:GA75VP_16 - Model:GA 75VSD+
MOVOL:200V - Supply voltage:200 V
MOVOL:230V - Supply voltage:230 V
MOVOL:380V - Supply voltage:380 V
MOVOL:400V - Supply voltage:400 V
MOVOL:460V - Supply voltage:460 V
MOVOL:500V - Supply voltage:500 V
MOVOL:575V - Supply voltage:575 V

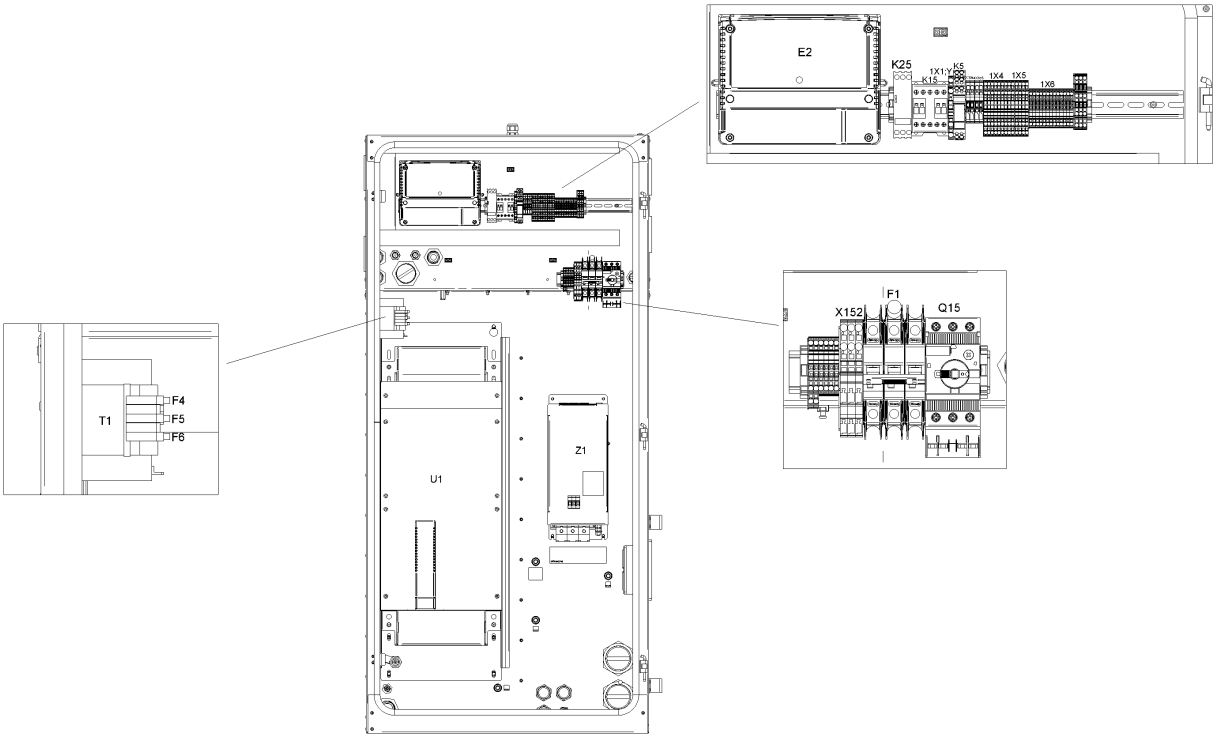
E2
K25
K15
K5
1X1:Y
1X4
1X5
1X6
F1
X152
Q15
T1
F4
F5
F6
U1
Z1

26.20 - IT Ancillaries GA 75L VSD+ - 200V-400V-500V/50Hz, 200V-230V-380V-460V-575V/60Hz - Pack (12/12/2018 - 27/11/2019)

((MOVOL:200V , MOVOL:230V , MOVOL:380V , MOVOL:460V , MOVOL:575V) + FREQ:60HZ , (MOVOL:200V , MOVOL:400V , MOVOL:500V) + FREQ:50HZ) + IDRY:N + MODEL:GA75VP_16

Ref	Part Number	Qty	Name	Validity	EL
	0697 9811 10	1	PLUG	(12/12/2018 - 27/11/2019)	
	Electrical legend:	Plug for smartbox hole			
	0989 3700 41	1	LOCKNUT	(12/12/2018 - 27/11/2019)	
	Electrical legend:	Nut for smartbox hole			

Legend:

FREQ:50HZ - Frequency:50 Hz
FREQ:60HZ - Frequency:60 Hz
IDRY:N - Integrated dryer:No
MODEL:GA75VP_16 - Model:GA 75VSD+
MOVOL:200V - Supply voltage:200 V
MOVOL:230V - Supply voltage:230 V
MOVOL:380V - Supply voltage:380 V
MOVOL:400V - Supply voltage:400 V
MOVOL:460V - Supply voltage:460 V
MOVOL:500V - Supply voltage:500 V
MOVOL:575V - Supply voltage:575 V

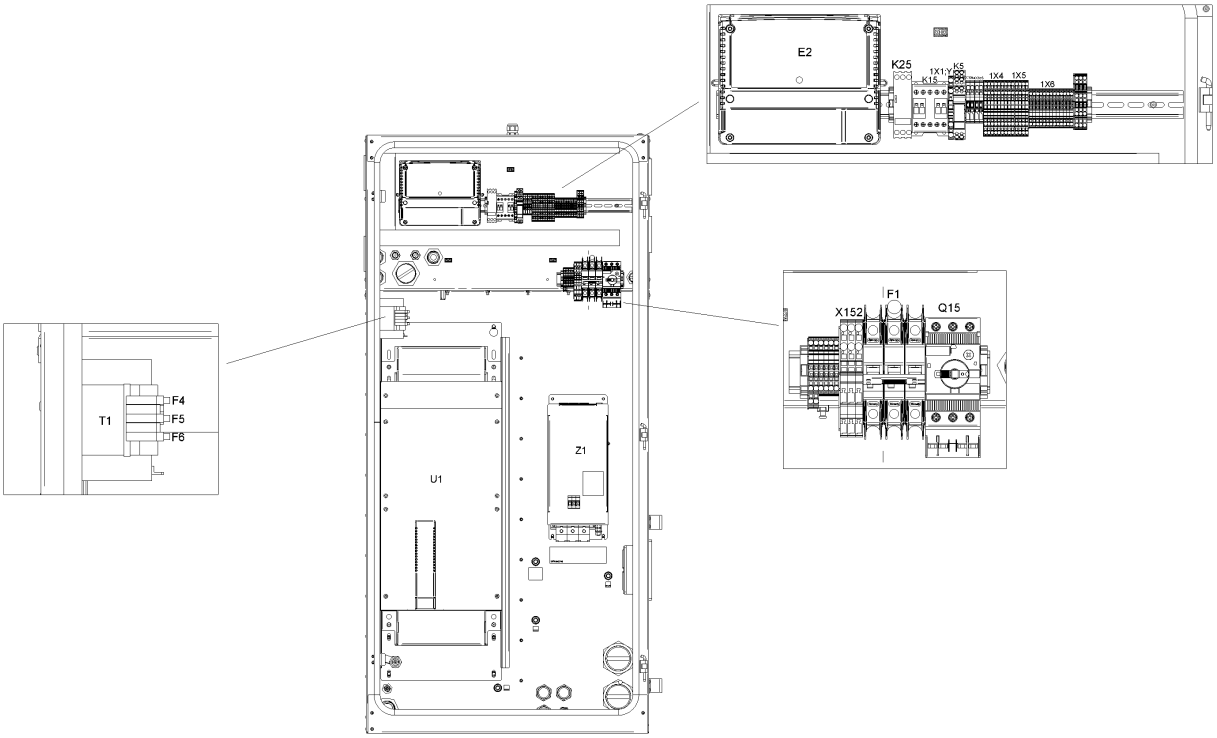
E2
K25
K5
K15
1X1
1X4
1X5
1X6
T1
F4
F5
F6
U1
Z1
F1
X152
Q15

26.21 - IT Ancillaries GA 75L VSD+ - 200V-400V-500V/50Hz, 200V-230V-380V-460V-575V/60Hz - Pack (28/11/2019 - ...)

((MOVOL:200V , MOVOL:230V , MOVOL:380V , MOVOL:460V , MOVOL:575V) + FREQ:60HZ , (MOVOL:200V , MOVOL:400V , MOVOL:500V) + FREQ:50HZ) + IDRY:N + MODEL:GA75VP_16

Ref	Part Number	Qty	Name	Validity	EL
	1900 2202 42	1	CUBICLE	(28/11/2019 - ...)	
	9820 3000 31	1	ASSEMBLY DRAWING	(28/11/2019 - ...)	AD
	9820 3000 27	1	SERVICE DIAGRAM	(28/11/2019 - ...)	SD
	1622 3798 72	1	WIRE HARNESS	(28/11/2019 - ...)	Comm Cable
	1622 5099 04	1	DI CHANE CABLE (1400MM)	(28/11/2019 - ...)	
	Electrical legend:	Comm Cable Loose supply			
	1649 8006 00	1	CUBICLE	(28/11/2019 - ...)	MSA
	1649 8001 32	1	PLATE NEOS "D"	(28/11/2019 - ...)	
	Electrical legend:	Mounting plate			
	1649 8003 85	1	MOUNTING PLATE	(28/11/2019 - ...)	
	Electrical legend:	Mounting plate			
	1649 8002 39	1	WIRE HARNESS	(28/11/2019 - ...)	WH
	1649 8002 40	1	WIRE HARNESS	(28/11/2019 - ...)	WH
	1649 8002 73	1	WIRE HARNESS	(28/11/2019 - ...)	
	Electrical legend:	Pack Drain + Air filter switch			
	1649 8002 75	1	WIRE HARNESS	(28/11/2019 - ...)	
	Electrical legend:	Relative Humidity sensor			
	1649 8001 45	3	MOTOR CABLE	(28/11/2019 - ...)	
	Electrical legend:	Motor conduit			
	1649 8001 48	1	MOTOR CABLE	(28/11/2019 - ...)	
	Electrical legend:	Motor conduit			
	1625 3906 31	1	DATA LABEL	(28/11/2019 - ...)	Label
	1079 9901 68	1	WARNING LABEL	(28/11/2019 - ...)	Label
	1649 8005 00	0	LABEL	(28/11/2019 - ...)	Label
	1900 5350 95	1	INVERTER	(28/11/2019 - ...)	U1
	1631 2079 00	1	NANOPERMRING	(28/11/2019 - ...)	
	Electrical legend:	Nanoperm ring			
	0697 9811 17	2	PLUG	(28/11/2019 - ...)	
	Electrical legend:	Plug for transfo supply			
	0989 3700 48	2	NUT	(28/11/2019 - ...)	
	Electrical legend:	Nut for transfo supply			
	0698 5140 72	1	CABLE GLAND	(28/11/2019 - ...)	Fan
	0698 5140 71	1	CABLE GLAND	(28/11/2019 - ...)	
	Electrical legend:	Ambient sensor			
	0697 9809 20	1	LOCKNUT	(28/11/2019 - ...)	
	Electrical legend:	Ambient sensor			
	1089 9556 44	1	FAN WITH FILTER	(28/11/2019 - ...)	Cubicle fan
	1089 9556 72	4	AIR INLET WITHOUT FILTER	(28/11/2019 - ...)	Filter grid
	1088 0032 09	1	CONNECTOR	(28/11/2019 - ...)	X3
	1089 9572 05	1	LINE FILTER	(28/11/2019 - ...)	Z1 for 75 kw
	Electrical legend:	Z1 for 75 kw			
	1089 9562 04	1	STRAP	(28/11/2019 - ...)	HF-screen
	1089 9514 56	1	TRANSFORMER	(28/11/2019 - ...)	T1
	1089 9522 26	1	CIRCUIT BREAKER	(28/11/2019 - ...)	F1
	1089 9513 41	1	PUSH BUTTON	(28/11/2019 - ...)	S3
	1089 9513 28	1	HOLDER	(28/11/2019 - ...)	S3
	~~1089 9513 30~~	4	CONTACTOR	(28/11/2019 - ...)	S3
	Substituted by:	1089 9513 04 - CONTACT BLOCK (quantity: 1)			
	1088 0039 07	3	TERMINAL	(28/11/2019 - ...)	X152
	1088 0039 05	1	PLATE	(28/11/2019 - ...)	X152
	1088 0039 26	1	CONNECTOR	(28/11/2019 - ...)	
	Electrical legend:	X152 (remove coding pin 1,3)			
	1088 0037 99	4	PIN	(28/11/2019 - ...)	X152:1; 3
	~~1088 0031 81~~	7	END STOP BRACKET 6MM	(28/11/2019 - ...)	

Legend:

FREQ:50HZ - Frequency:50 Hz
FREQ:60HZ - Frequency:60 Hz
IDRY:N - Integrated dryer:No
MODEL:GA75VP_16 - Model:GA 75VSD+
MOVOL:200V - Supply voltage:200 V
MOVOL:230V - Supply voltage:230 V
MOVOL:380V - Supply voltage:380 V
MOVOL:400V - Supply voltage:400 V
MOVOL:460V - Supply voltage:460 V
MOVOL:500V - Supply voltage:500 V
MOVOL:575V - Supply voltage:575 V

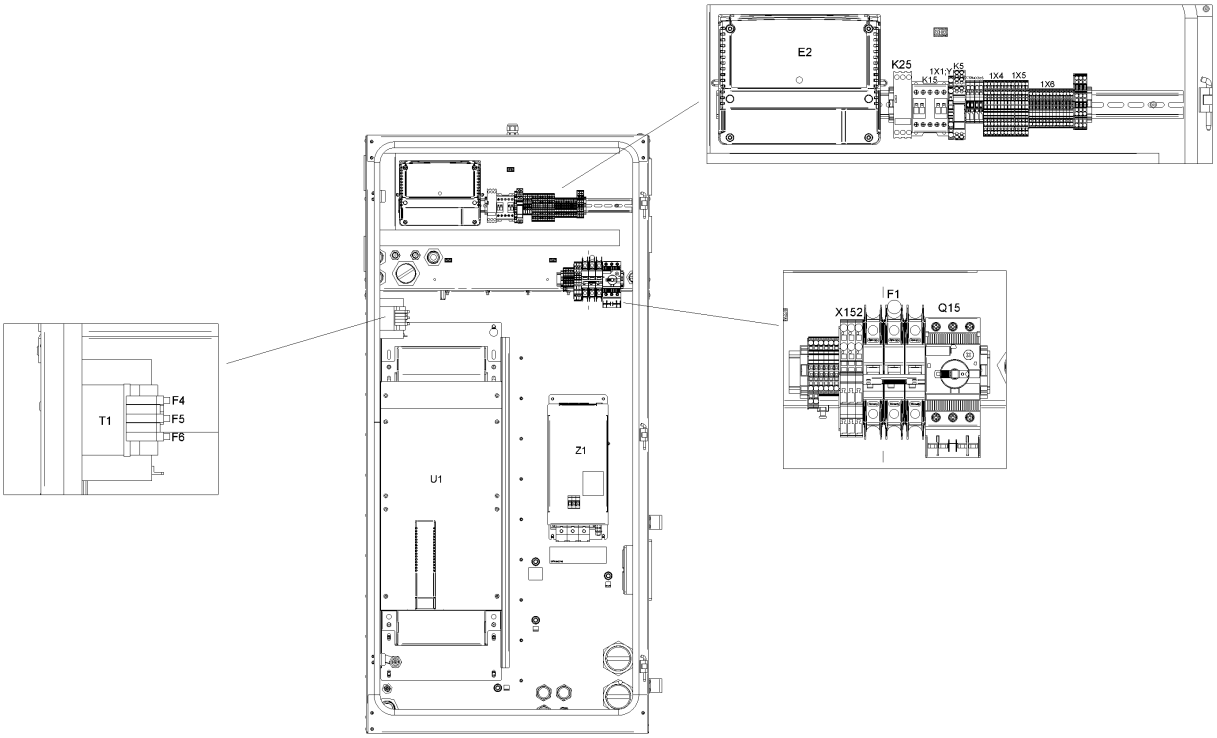
E2
K25
K15
1X1:Y
K5
1X4
1X5
1X6
F1
X152
Q15
T1
F4
F5
F6
U1
Z1

Ref	Part Number	Qty	Name	Validity	EL
	Electrical legend:	Connector/terminal rail			
	Substituted by:	1089 0577 82 - END RETAINER (quantity: 1)			
	1088 0039 38	2	TERMINAL	(28/11/2019 - ...)	1X11:2,5
	1088 0039 40	1	PLATE	(28/11/2019 - ...)	1X11
	1088 0039 34	4	TERMINAL	(28/11/2019 - ...)	
	Electrical legend:	1X11:30,301,34			
	1088 0039 35	1	PLATE	(28/11/2019 - ...)	1X11
	1088 0039 04	2	TERMINAL	(28/11/2019 - ...)	X104a
	1088 0037 99	2	PIN	(28/11/2019 - ...)	X104a/X105
	1088 0039 02	1	PLATE	(28/11/2019 - ...)	X104a
	1088 0039 07	2	TERMINAL	(28/11/2019 - ...)	X105
	1088 0039 05	1	PLATE	(28/11/2019 - ...)	X105
	1088 0039 34	13	TERMINAL	(28/11/2019 - ...)	1X6
	1088 0037 69	3	CONNECTOR	(28/11/2019 - ...)	1X7
	1088 0039 35	1	PLATE	(28/11/2019 - ...)	1X6
	1088 0040 37	1	END PLATE	(28/11/2019 - ...)	1X7
	1088 0039 36	9	TERMINAL	(28/11/2019 - ...)	1X4
	1088 0039 36	4	TERMINAL	(28/11/2019 - ...)	1X6
	1088 0039 37	1	END PLATE	(28/11/2019 - ...)	1X4
	1088 0039 37	1	END PLATE	(28/11/2019 - ...)	1X6
	1088 0039 37	1	END PLATE	(28/11/2019 - ...)	1X1:Y/D
	1088 0037 81	1	CONNECTOR	(28/11/2019 - ...)	2X27
	1088 0037 80	1	CONNECTOR	(28/11/2019 - ...)	2X28
	1088 0031 32	1	CONNECTOR	(28/11/2019 - ...)	2X30
	1088 0031 26	1	CONNECTOR 6-POLE	(28/11/2019 - ...)	2X31
	~~1089 9664 06~~	1	SWITCH	(28/11/2019 - ...)	Q15
	Substituted by:	1089 9551 97 - AUX.CONTACT CIRCUIT BREAKER (quantity: 1)			
	1089 9551 18	1	CIRCUIT BREAKER	(28/11/2019 - ...)	Q15
	1088 0038 26	1	TERMINAL	(28/11/2019 - ...)	1X1:Y/D
	1089 9602 79	1	CONTACTOR 110 V	(28/11/2019 - ...)	K15
	1089 9461 26	1	PHASE SEQUENCE RELAY	(28/11/2019 - ...)	K25
	1088 0032 17	1	RELAY 115 VAC	(28/11/2019 - ...)	K5
	0991 8011 21	AR	CABLE TRAY	(28/11/2019 - ...)	L=1384mm
	0697 9811 16	1	PLUG	(28/11/2019 - ...)	
	Electrical legend:	Plug for Dryer			
	0989 3700 47	1	LOCKNUT	(28/11/2019 - ...)	
	Electrical legend:	Locknut for dryer			
	0697 9811 11	2	PLUG	(28/11/2019 - ...)	
	Electrical legend:	Plug for FF Drain/LAT			
	0989 3700 42	2	NUT	(28/11/2019 - ...)	
	Electrical legend:	Locknut for FF Drain/LAT			
	1088 0031 13	1	CONNECTOR 13-POLE	(28/11/2019 - ...)	1X30
	1088 0037 82	1	CONNECTOR	(28/11/2019 - ...)	3X34
	0697 9811 13	1	PLUG	(28/11/2019 - ...)	
	Electrical legend:	Energy recovery			
	0989 3700 44	1	LOCKNUT	(28/11/2019 - ...)	
	Electrical legend:	Energy recovery			
	0697 9811 12	1	PLUG	(28/11/2019 - ...)	
	Electrical legend:	Control circuit of T10			
	0989 3700 43	1	NUT	(28/11/2019 - ...)	
	Electrical legend:	Control circuit of T10			
	0697 9811 10	1	PLUG	(28/11/2019 - ...)	
	Electrical legend:	Plug for smartbox hole			

Legend:

FREQ:50HZ - Frequency:50 Hz
FREQ:60HZ - Frequency:60 Hz
IDRY:N - Integrated dryer:No
MODEL:GA75VP_16 - Model:GA 75VSD+
MOVOL:200V - Supply voltage:200 V
MOVOL:230V - Supply voltage:230 V
MOVOL:380V - Supply voltage:380 V
MOVOL:400V - Supply voltage:400 V
MOVOL:460V - Supply voltage:460 V
MOVOL:500V - Supply voltage:500 V
MOVOL:575V - Supply voltage:575 V

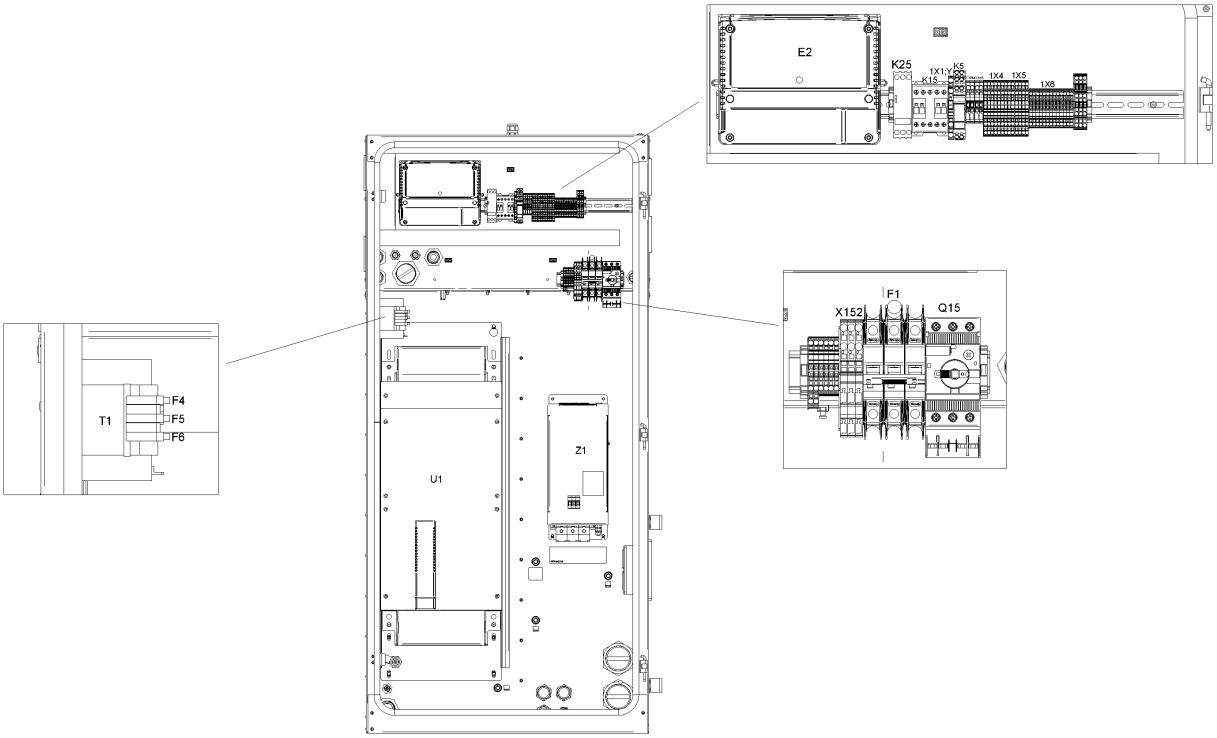
E2
K25
K15
1X1:Y
K5
1X4
1X5
1X6
T1
F4
F5
F6
U1
Z1
F1
X152
Q15

26.21 - IT Ancillaries GA 75L VSD+ - 200V-400V-500V/50Hz, 200V-230V-380V-460V-575V/60Hz - Pack (28/11/2019 - ...)

((MOVOL:200V , MOVOL:230V , MOVOL:380V , MOVOL:460V , MOVOL:575V) + FREQ:60HZ , (MOVOL:200V , MOVOL:400V , MOVOL:500V) + FREQ:50HZ) + IDRY:N + MODEL:GA75VP_16

Ref	Part Number	Qty	Name	Validity	EL
	0989 3700 41	1	LOCK NUT	(28/11/2019 - ...)	
	Electrical legend:	Nut for smartbox hole			
	1089 9556 37	1	AIR INLET WITH FILTER	(28/11/2019 - ...)	Fan Filter

Legend:

FREQ:50HZ - Frequency:50 Hz
FREQ:60HZ - Frequency:60 Hz
IDRY:N - Integrated dryer:No
MODEL:GA75VP_16 - Model:GA 75VSD+
MOVOL:200V - Supply voltage:200 V
MOVOL:230V - Supply voltage:230 V
MOVOL:380V - Supply voltage:380 V
MOVOL:400V - Supply voltage:400 V
MOVOL:460V - Supply voltage:460 V
MOVOL:500V - Supply voltage:500 V
MOVOL:575V - Supply voltage:575 V

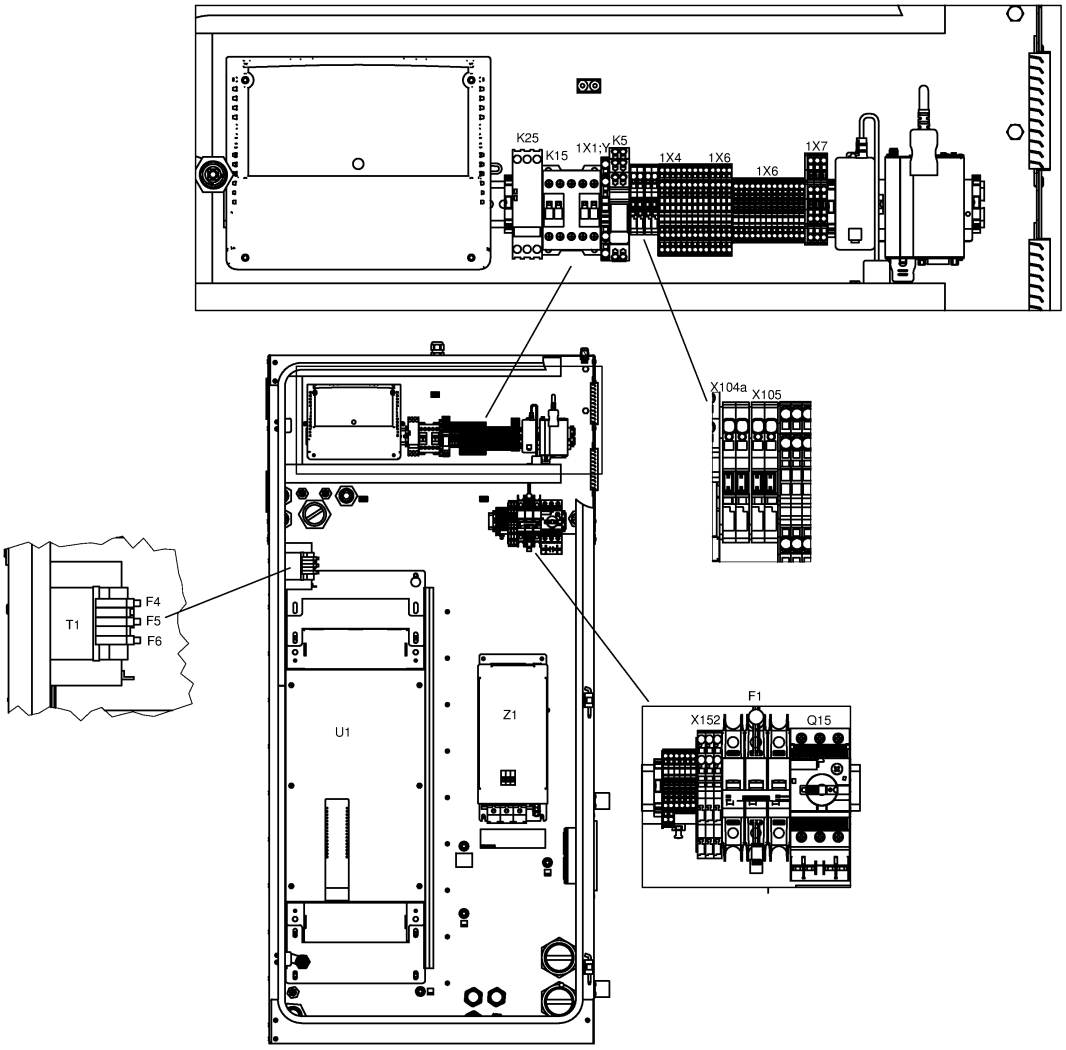
K25
K15
1X1;
K5
1X4
1X6
1X6
1X7
X104a
X105
T1
F4
F5
F6
U1
Z1
F1
X152
Q15

26.22 - IT Ancillaries GA 90 VSD+ - 200V-400V-500V/50Hz, 200V-230V-380V-460V-575V/60Hz - Pack (17/10/2017 - 11/12/2018)

((MOVOL:200V , MOVOL:230V , MOVOL:380V , MOVOL:460V , MOVOL:575V) + FREQ:60HZ , (MOVOL:200V , MOVOL:400V , MOVOL:500V) + FREQ:50HZ) + IDRY:N + MODEL:GA90VP_16

Ref	Part Number	Qty	Name	Validity	EL
	1900 2202 08	1	CUBICLE	(17/10/2017 - 11/12/2018)	
	9820 3000 21	1	CUBICLE LAYOUT	(17/10/2017 - 11/12/2018)	-
	9820 3000 22	1	SERVICE DIAGRAM	(17/10/2017 - 11/12/2018)	-
	1622 3798 70	1	WIRE HARNESS COMM CABLE	(17/10/2017 - 11/12/2018)	-
	1622 5099 04	1	DI CHANE CABLE (1400MM)	(17/10/2017 - 11/12/2018)	
	Electrical legend:	Comm Cable Loose supply			
	1649 8001 22	1	CUBICLE	(17/10/2017 - 11/12/2018)	-
•	1202 6584 02	AR	SEAL		-
	1649 8001 32	1	PLATE NEOS "D"	(17/10/2017 - 11/12/2018)	-
	1649 8003 85	1	MOUNTING PLATE	(17/10/2017 - 11/12/2018)	-
	1649 8002 39	1	WIRE HARNESS	(17/10/2017 - 11/12/2018)	-
	1649 8002 40	1	WIRE HARNESS	(17/10/2017 - 11/12/2018)	-
	1649 8002 73	1	WIRE HARNESS	(17/10/2017 - 11/12/2018)	
	Electrical legend:	Pack Drain + Air filter switch			
	1649 8002 75	1	WIRE HARNESS	(17/10/2017 - 11/12/2018)	
	Electrical legend:	Relative Humidity sensor			
	1649 8001 44	3	MOTOR CABLE	(17/10/2017 - 11/12/2018)	-
	1649 8001 47	1	MOTOR CABLE	(17/10/2017 - 11/12/2018)	-
		1	DATA LABEL	(17/10/2017 - 01/02/2018)	-
		1	DATA LABEL	(02/02/2018 - 11/12/2018)	-
	1079 9901 68	1	WARNING LABEL	(17/10/2017 - 11/12/2018)	-
	1900 5350 19	1	INVERTER	(17/10/2017 - 11/12/2018)	U1
	1631 2079 00	1	NANOPERMRING	(17/10/2017 - 11/12/2018)	-
	0697 9811 17	2	PLUG	(17/10/2017 - 11/12/2018)	
	Electrical legend:	Plug for transfo supply			
	0989 3700 48	2	NUT	(17/10/2017 - 11/12/2018)	
	Electrical legend:	Nut for transfo supply			
	0698 5140 72	1	CABLE GLAND	(17/10/2017 - 11/12/2018)	Fan
	0698 5140 71	1	CABLE GLAND	(17/10/2017 - 11/12/2018)	
	Electrical legend:	Ambient sensor			
	0697 9809 20	1	LOCKNUT	(17/10/2017 - 11/12/2018)	
	Electrical legend:	Ambient sensor			
	1089 9556 44	1	FAN WITH FILTER	(17/10/2017 - 11/12/2018)	Cubicle fan
		4	AIR INLET W/O FILTER	(17/10/2017 - 11/12/2018)	-
	Service kits:	2901 9901 02 - PREVENTIVE MAINTENANCE KIT - GA 90 VSD+, GA 110 VSD+ 2901 9900 96 - AIR FILTER KIT - GA 90 VSD+, GA 110 VSD+			
	1088 0032 09	1	CONNECTOR	(17/10/2017 - 11/12/2018)	X3
	1089 9572 06	1	LINE FILTER	(17/10/2017 - 11/12/2018)	Z1 for 90kw
	1089 9562 04	1	STRAP	(17/10/2017 - 11/12/2018)	HF-screen
	1089 9514 56	1	TRANSFORMER	(17/10/2017 - 11/12/2018)	T1
	1089 9522 26	1	CIRCUIT BREAKER	(17/10/2017 - 11/12/2018)	F1
	1089 9513 41	1	PUSH BUTTON	(17/10/2017 - 11/12/2018)	S3
	1089 9513 28	1	HOLDER	(17/10/2017 - 11/12/2018)	S3
	~~1089 9513 30~~	4	CONTACTOR	(17/10/2017 - 11/12/2018)	S3
	Substituted by:	1089 9513 04 - CONTACT BLOCK (quantity: 1)			
	1088 0031 02	1	CONNECTOR 2-POLE	(17/10/2017 - 11/12/2018)	
	Electrical legend:	X153 (Smartbox)			
	1088 0039 07	3	TERMINAL	(17/10/2017 - 11/12/2018)	X152
	1088 0039 05	1	PLATE	(17/10/2017 - 11/12/2018)	X152
	1088 0039 26	1	CONNECTOR	(17/10/2017 - 11/12/2018)	
	Electrical legend:	X152 (remove coding pin 1,3)			
	1088 0037 99	4	PIN	(17/10/2017 - 11/12/2018)	X152:1; 3

Legend:

FREQ:50HZ - Frequency:50 Hz
FREQ:60HZ - Frequency:60 Hz
IDRY:N - Integrated dryer:No
MODEL:GA90VP_16 - Model:GA 90VSD+
MOVOL:200V - Supply voltage:200 V
MOVOL:230V - Supply voltage:230 V
MOVOL:380V - Supply voltage:380 V
MOVOL:400V - Supply voltage:400 V
MOVOL:460V - Supply voltage:460 V
MOVOL:500V - Supply voltage:500 V
MOVOL:575V - Supply voltage:575 V

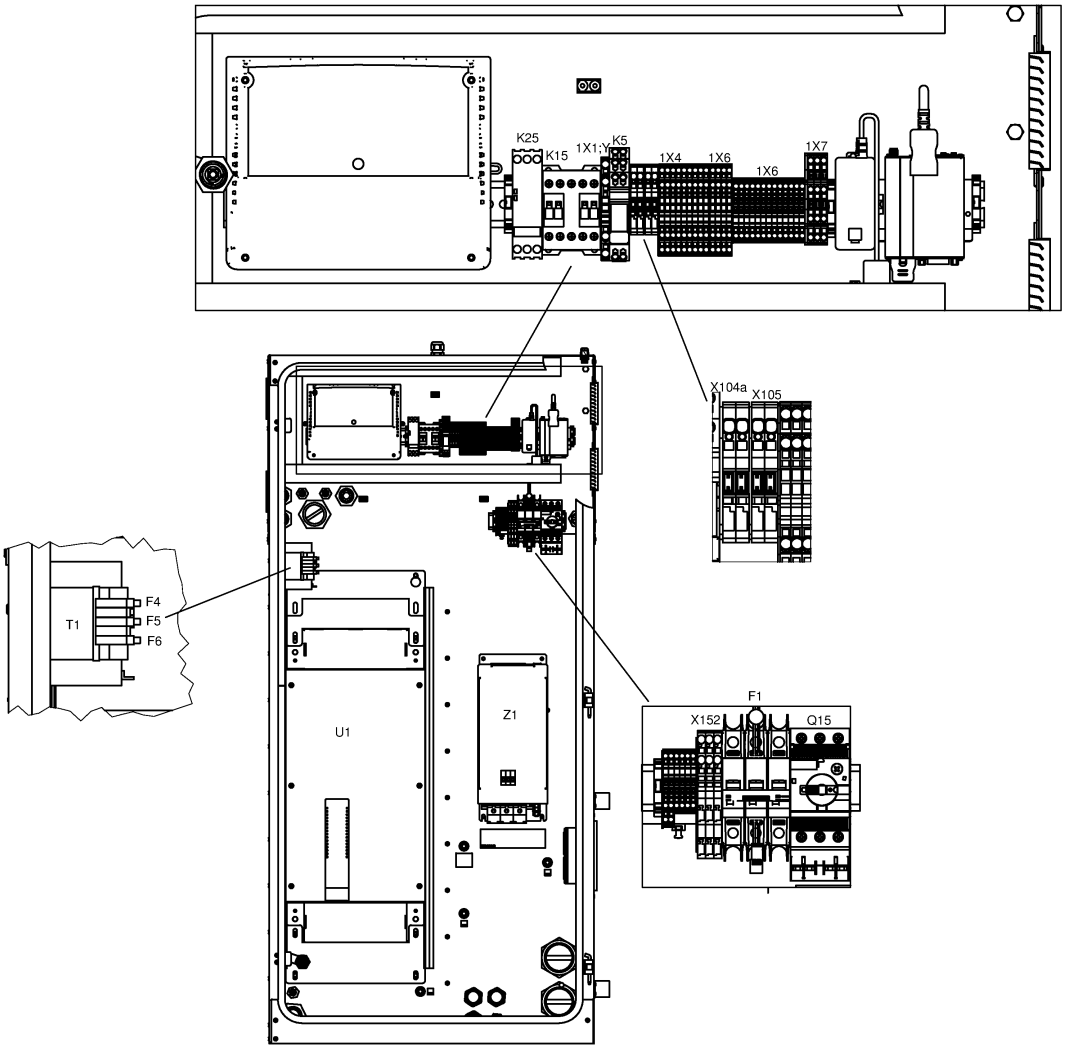
K25
K15
1X1
K5
1X4
1X6
1X6
1X7
X104a
X105
T1
F4
F5
F6
U1
Z1
F1
X152
Q15

26.22 - IT Ancillaries GA 90 VSD+ - 200V-400V-500V/50Hz, 200V-230V-380V-460V-575V/60Hz - Pack (17/10/2017 - 11/12/2018)

((MOVOL:200V , MOVOL:230V , MOVOL:380V , MOVOL:460V , MOVOL:575V) + FREQ:60HZ , (MOVOL:200V , MOVOL:400V , MOVOL:500V) + FREQ:50HZ) + IDRY:N + MODEL:GA90VP_16

Ref	Part Number	Qty	Name	Validity	EL
	~~1088 0031 81~~	7	END STOP BRACKET	(17/10/2017 - 11/12/2018)	
	Electrical legend:	Connector/terminal rail			
	Substituted by:	1089 0577 82 - END RETAINER (quantity: 1)			
	1088 0039 38	2	TERMINAL	(17/10/2017 - 11/12/2018)	1X11:2,5
	1088 0039 40	1	PLATE	(17/10/2017 - 11/12/2018)	1X11
	1088 0039 34	4	TERMINAL	(17/10/2017 - 11/12/2018)	
	Electrical legend:	1X11:30,301,34			
	1088 0039 35	1	PLATE	(17/10/2017 - 11/12/2018)	1X11
	1088 0039 04	2	TERMINAL	(17/10/2017 - 11/12/2018)	X104a
	1088 0037 99	2	PIN	(17/10/2017 - 11/12/2018)	X104a/X105
	1088 0039 02	1	PLATE	(17/10/2017 - 11/12/2018)	X104a
	1088 0039 04	2	TERMINAL	(17/10/2017 - 11/12/2018)	
	1088 0039 02	1	PLATE	(17/10/2017 - 11/12/2018)	
	1088 0039 34	13	TERMINAL	(17/10/2017 - 11/12/2018)	1X6
	1088 0037 69	3	CONNECTOR	(17/10/2017 - 11/12/2018)	1X7
	1088 0039 35	1	PLATE	(17/10/2017 - 11/12/2018)	1X6
	1088 0040 37	1	END PLATE	(17/10/2017 - 11/12/2018)	1X7
	1088 0039 36	9	TERMINAL	(17/10/2017 - 11/12/2018)	1X4
	1088 0039 36	4	TERMINAL	(17/10/2017 - 11/12/2018)	1X6
	1088 0039 37	1	END PLATE	(17/10/2017 - 11/12/2018)	1X4
	1088 0039 37	1	END PLATE	(17/10/2017 - 11/12/2018)	1X6
	1088 0039 37	1	END PLATE	(17/10/2017 - 11/12/2018)	1X1:Y/D
	1088 0037 81	1	CONNECTOR	(17/10/2017 - 11/12/2018)	2X27
	1088 0037 80	1	CONNECTOR	(17/10/2017 - 11/12/2018)	2X28
	1088 0031 32	1	CONNECTOR	(17/10/2017 - 11/12/2018)	2X30
	1088 0031 26	1	CONNECTOR 6-POLE	(17/10/2017 - 11/12/2018)	2X31
	~~1089 9664 06~~	1	SWITCH	(17/10/2017 - 11/12/2018)	Q15
	Substituted by:	1089 9551 97 - AUX.CONTACT CIRCUIT BREAKER (quantity: 1)			
	1089 9551 18	1	CIRCUIT BREAKER	(17/10/2017 - 11/12/2018)	Q15
	1088 0038 26	1	TERMINAL	(17/10/2017 - 11/12/2018)	1X1:Y/D
	1089 9602 79	1	CONTACTOR 110 V	(17/10/2017 - 11/12/2018)	K15
	1089 9461 26	1	PHASE SEQUENCE RELAY	(17/10/2017 - 11/12/2018)	K25
	1088 0032 17	1	RELAY 115 VAC	(17/10/2017 - 11/12/2018)	K5
	0991 8011 21	AR	CABLE TRAY	(17/10/2017 - 11/12/2018)	L=1384mm
	0697 9811 16	1	PLUG	(17/10/2017 - 11/12/2018)	
	Electrical legend:	Plug for Dryer			
	0989 3700 47	1	LOCKNUT	(17/10/2017 - 11/12/2018)	
	Electrical legend:	Locknut for dryer			
	0697 9811 11	2	PLUG	(17/10/2017 - 11/12/2018)	
	Electrical legend:	Plug for FF Drain/LAT			
	0989 3700 42	2	NUT	(17/10/2017 - 11/12/2018)	
	Electrical legend:	Locknut for FF Drain/LAT			
	1088 0031 13	1	CONNECTOR 13-POLE	(17/10/2017 - 11/12/2018)	1X30
	1088 0037 82	1	CONNECTOR	(17/10/2017 - 11/12/2018)	3X34
	0697 9811 13	1	PLUG	(17/10/2017 - 11/12/2018)	
	Electrical legend:	Energy recovery			
	0989 3700 44	1	LOCKNUT	(17/10/2017 - 11/12/2018)	
	Electrical legend:	Energy recovery			
	0697 9811 12	1	PLUG	(17/10/2017 - 11/12/2018)	
	Electrical legend:	Control circuit of T10			
	0989 3700 43	1	NUT	(17/10/2017 - 11/12/2018)	
	Electrical legend:	Control circuit of T10			

Legend:

FREQ:50HZ - Frequency:50 Hz
FREQ:60HZ - Frequency:60 Hz
IDRY:N - Integrated dryer:No
MODEL:GA90VP_16 - Model:GA 90VSD+
MOVOL:200V - Supply voltage:200 V
MOVOL:230V - Supply voltage:230 V
MOVOL:380V - Supply voltage:380 V
MOVOL:400V - Supply voltage:400 V
MOVOL:460V - Supply voltage:460 V
MOVOL:500V - Supply voltage:500 V
MOVOL:575V - Supply voltage:575 V

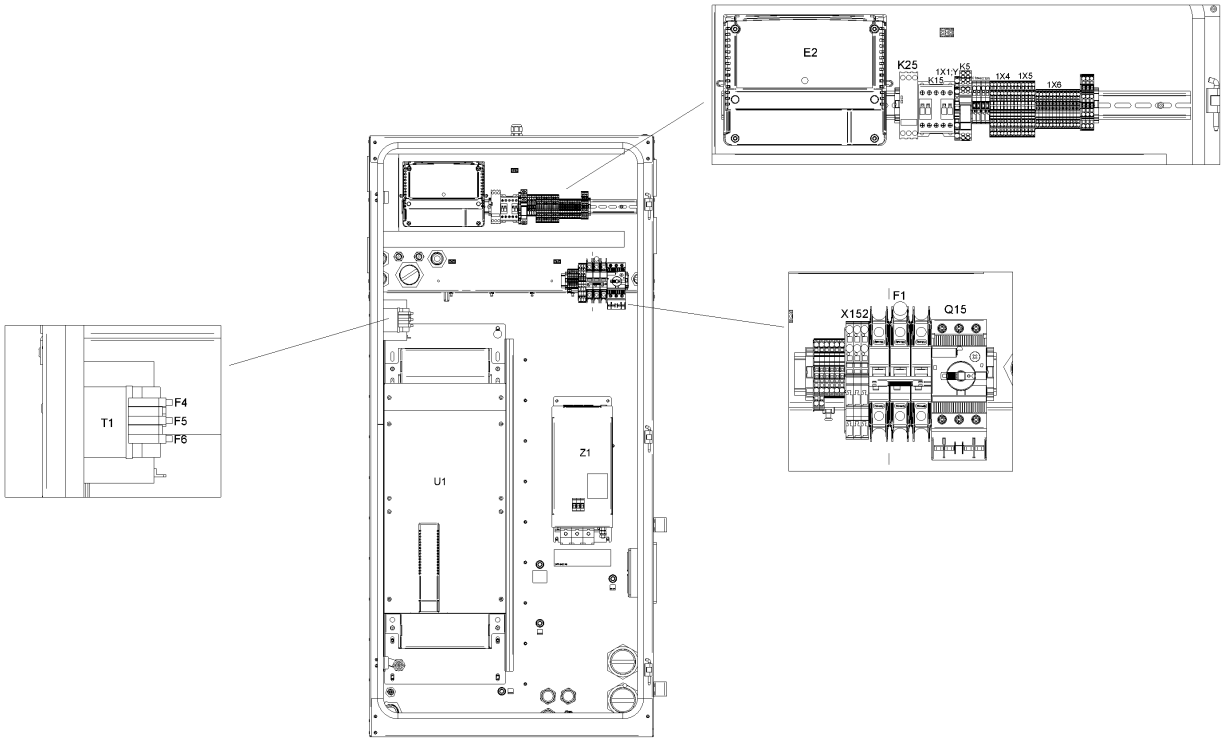
E2
K25
K15
1X1
1X4
1X5
1X6
T1
F4
F5
F6
U1
Z1
X152
F1
Q15

26.23 - IT Ancillaries GA 90 VSD+ - 200V-400V-500V/50Hz, 200V-230V-380V-460V-575V/60Hz - Pack (12/12/2018 - 16/12/2019)

((MOVOL:200V , MOVOL:230V , MOVOL:380V , MOVOL:460V , MOVOL:575V) + FREQ:60HZ , (MOVOL:200V , MOVOL:400V , MOVOL:500V) + FREQ:50HZ) + IDRY:N + MODEL:GA90VP_16

Ref	Part Number	Qty	Name	Validity	EL
	1900 2202 27	1	CUBICLE	(12/12/2018 - ...)	
	9820 3000 31	1	ASSEMBLY DRAWING	(12/12/2018 - 16/12/2019)	AD
	9820 3000 27	1	SERVICE DIAGRAM	(12/12/2018 - 16/12/2019)	SD
	1622 3798 72	1	WIRE HARNESS	(12/12/2018 - 16/12/2019)	Comm Cable
	1622 5099 04	1	DI CHANE CABLE (1400MM)	(12/12/2018 - 16/12/2019)	
	Electrical legend:	Comm Cable Loose supply			
	1649 8001 22	1	CUBICLE	(12/12/2018 - 16/12/2019)	MSA
	1649 8001 32	1	PLATE NEOS "D"	(12/12/2018 - 16/12/2019)	
	Electrical legend:	Mounting plate			
	1649 8003 85	1	MOUNTING PLATE	(12/12/2018 - 16/12/2019)	
	Electrical legend:	Mounting plate			
	1649 8002 39	1	WIRE HARNESS	(12/12/2018 - 16/12/2019)	WH
	1649 8002 40	1	WIRE HARNESS	(12/12/2018 - 16/12/2019)	WH
	1649 8002 73	1	WIRE HARNESS	(12/12/2018 - 16/12/2019)	
	Electrical legend:	Pack Drain + Air filter switch			
	1649 8002 75	1	WIRE HARNESS	(12/12/2018 - 16/12/2019)	
	Electrical legend:	Relative Humidity sensor			
	1649 8001 44	3	MOTOR CABLE	(12/12/2018 - 16/12/2019)	
	Electrical legend:	Motor conduit			
	1649 8001 47	1	MOTOR CABLE	(12/12/2018 - 16/12/2019)	
	Electrical legend:	Motor conduit			
		1	DATALABEL	(12/12/2018 - 16/12/2019)	Label
	1079 9901 68	1	WARNING LABEL	(12/12/2018 - 16/12/2019)	Label
	1649 8005 00	-	LABEL	(12/12/2018 - 16/12/2019)	Label
	1900 5350 19	1	INVERTER	(12/12/2018 - 16/12/2019)	U1
	1631 2079 00	1	NANOPERMRING	(12/12/2018 - 16/12/2019)	
	Electrical legend:	Nanoperm ring			
	0697 9811 17	2	PLUG	(12/12/2018 - 16/12/2019)	
	Electrical legend:	Plug for transfo supply			
	0989 3700 48	2	NUT	(12/12/2018 - 16/12/2019)	
	Electrical legend:	Nut for transfo supply			
	0698 5140 72	1	CABLE GLAND	(12/12/2018 - 16/12/2019)	Fan
	0698 5140 71	1	CABLE GLAND	(12/12/2018 - 16/12/2019)	
	Electrical legend:	Ambient sensor			
	0697 9809 20	1	LOCKNUT	(12/12/2018 - 16/12/2019)	
	Electrical legend:	Ambient sensor			
	1089 9556 44	1	FAN WITH FILTER	(12/12/2018 - 16/12/2019)	Cubicle fan
	1089 9556 72	4	AIR INLET WITHOUT FILTER	(12/12/2018 - 16/12/2019)	Filter grid
	1088 0032 09	1	CONNECTOR	(12/12/2018 - 16/12/2019)	X3
	1089 9572 06	1	LINE FILTER	(12/12/2018 - 16/12/2019)	Z1 for 90kw
	1089 9562 04	1	STRAP	(12/12/2018 - 16/12/2019)	HF-screen
	1089 9514 56	1	TRANSFORMER	(12/12/2018 - 16/12/2019)	T1
	1089 9522 26	1	CIRCUIT BREAKER	(12/12/2018 - 16/12/2019)	F1
	1089 9513 41	1	PUSH BUTTON	(12/12/2018 - 16/12/2019)	S3
	1089 9513 28	1	HOLDER	(12/12/2018 - 16/12/2019)	S3
	~~1089 9513 30~~	4	CONTACTOR	(12/12/2018 - 16/12/2019)	S3
	Substituted by:	1089 9513 04 - CONTACT BLOCK (quantity: 1)			
	1088 0031 02	1	CONNECTOR 2-POLE	(12/12/2018 - 17/02/2019)	
	1088 0039 07	3	TERMINAL	(12/12/2018 - 16/12/2019)	X152
	1088 0039 05	1	PLATE	(12/12/2018 - 16/12/2019)	X152
	1088 0039 26	1	CONNECTOR	(12/12/2018 - 16/12/2019)	
	Electrical legend:	X152 (remove coding pin 1,3)			
	1088 0037 99	4	PIN	(12/12/2018 - 16/12/2019)	X152:1; 3

Legend:

FREQ:50HZ - Frequency:50 Hz
FREQ:60HZ - Frequency:60 Hz
IDRY:N - Integrated dryer:No
MODEL:GA90VP_16 - Model:GA 90VSD+
MOVOL:200V - Supply voltage:200 V
MOVOL:230V - Supply voltage:230 V
MOVOL:380V - Supply voltage:380 V
MOVOL:400V - Supply voltage:400 V
MOVOL:460V - Supply voltage:460 V
MOVOL:500V - Supply voltage:500 V
MOVOL:575V - Supply voltage:575 V

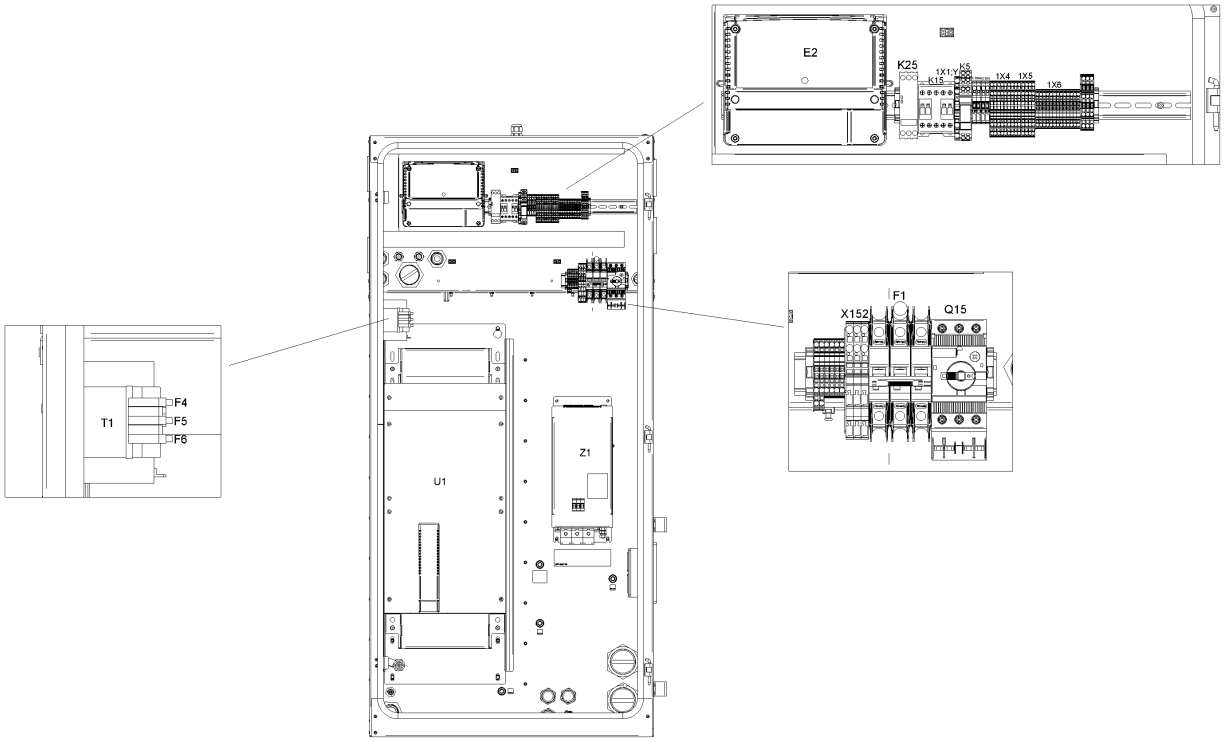
E2
K25
K15
1X1
1X4
1X5
1X6
T1
F4
F5
F6
U1
Z1
X152
F1
Q15

Ref	Part Number	Qty	Name	Validity	EL
	~~1088 0031 81~~	7	END STOP BRACKET 6MM	(12/12/2018 - 16/12/2019)	
	Electrical legend:	Connector/terminal rail			
	Substituted by:	1089 0577 82 - END RETAINER (quantity: 1)			
	1088 0039 38	2	TERMINAL	(12/12/2018 - 16/12/2019)	1X11:2,5
	1088 0039 40	1	PLATE	(12/12/2018 - 16/12/2019)	1X11
	1088 0039 34	4	TERMINAL	(12/12/2018 - 16/12/2019)	
	Electrical legend:	1X11:30,301,34			
	1088 0039 35	1	PLATE	(12/12/2018 - 16/12/2019)	1X11
	1088 0039 04	2	TERMINAL	(12/12/2018 - 16/12/2019)	X104a
	1088 0037 99	2	PIN	(12/12/2018 - 16/12/2019)	X104a/X105
	1088 0039 02	1	PLATE	(12/12/2018 - 16/12/2019)	X104a
	1088 0039 07	2	TERMINAL	(12/12/2018 - 16/12/2019)	X105
	1088 0039 05	1	PLATE	(12/12/2018 - 16/12/2019)	X105
	1088 0039 34	13	TERMINAL	(12/12/2018 - 16/12/2019)	1X6
	1088 0037 69	3	CONNECTOR	(12/12/2018 - 16/12/2019)	1X7
	1088 0039 35	1	PLATE	(12/12/2018 - 16/12/2019)	1X6
	1088 0040 37	1	END PLATE	(12/12/2018 - 16/12/2019)	1X7
	1088 0039 36	9	TERMINAL	(12/12/2018 - 16/12/2019)	1X4
	1088 0039 36	4	TERMINAL	(12/12/2018 - 16/12/2019)	1X6
	1088 0039 37	1	END PLATE	(12/12/2018 - 16/12/2019)	1X4
	1088 0039 37	1	END PLATE	(12/12/2018 - 16/12/2019)	1X6
	1088 0039 37	1	END PLATE	(12/12/2018 - 16/12/2019)	1X1:Y/D
	1088 0037 81	1	CONNECTOR	(12/12/2018 - 16/12/2019)	2X27
	1088 0037 80	1	CONNECTOR	(12/12/2018 - 16/12/2019)	2X28
	1088 0031 32	1	CONNECTOR	(12/12/2018 - 16/12/2019)	2X30
	1088 0031 26	1	CONNECTOR 6-POLE	(12/12/2018 - 16/12/2019)	2X31
	~~1089 9664 06~~	1	SWITCH	(12/12/2018 - 16/12/2019)	Q15
	Substituted by:	1089 9551 97 - AUX.CONTACT CIRCUIT BREAKER (quantity: 1)			
	1089 9551 18	1	CIRCUIT BREAKER	(12/12/2018 - 16/12/2019)	Q15
	1088 0038 26	1	TERMINAL	(12/12/2018 - 16/12/2019)	1X1:Y/D
	1089 9602 79	1	CONTACTOR 110 V	(12/12/2018 - 16/12/2019)	K15
	1089 9461 26	1	PHASE SEQUENCE RELAY	(12/12/2018 - 16/12/2019)	K25
	1088 0032 17	1	RELAY 115 VAC	(12/12/2018 - 16/12/2019)	K5
	0991 8011 21	AR	CABLE TRAY	(12/12/2018 - 16/12/2019)	L=1384mm
	0697 9811 16	1	PLUG	(12/12/2018 - 16/12/2019)	
	Electrical legend:	Plug for Dryer			
	0989 3700 47	1	LOCKNUT	(12/12/2018 - 16/12/2019)	
	Electrical legend:	Locknut for dryer			
	0697 9811 11	2	PLUG6	(12/12/2018 - 16/12/2019)	
	Electrical legend:	Plug for FF Drain/LAT			
	0989 3700 42	2	NUT	(12/12/2018 - 16/12/2019)	
	Electrical legend:	Locknut for FF Drain/LAT			
	1088 0031 13	1	CONNECTOR 13-POLE	(12/12/2018 - 16/12/2019)	1X30
	1088 0037 82	1	CONNECTOR	(12/12/2018 - 16/12/2019)	3X34
	0697 9811 13	1	PLUG	(12/12/2018 - 16/12/2019)	
	Electrical legend:	Energy recovery			
	0989 3700 44	1	LOCKNUT	(12/12/2018 - 16/12/2019)	
	Electrical legend:	Energy recovery			
	0697 9811 12	1	PLUG	(12/12/2018 - 16/12/2019)	
	Electrical legend:	Control circuit of T10			
	0989 3700 43	1	NUT	(12/12/2018 - 16/12/2019)	
	Electrical legend:	Control circuit of T10			

Legend:

FREQ:50HZ - Frequency:50 Hz
FREQ:60HZ - Frequency:60 Hz
IDRY:N - Integrated dryer:No
MODEL:GA90VP_16 - Model:GA 90VSD+
MOVOL:200V - Supply voltage:200 V
MOVOL:230V - Supply voltage:230 V
MOVOL:380V - Supply voltage:380 V
MOVOL:400V - Supply voltage:400 V
MOVOL:460V - Supply voltage:460 V
MOVOL:500V - Supply voltage:500 V
MOVOL:575V - Supply voltage:575 V

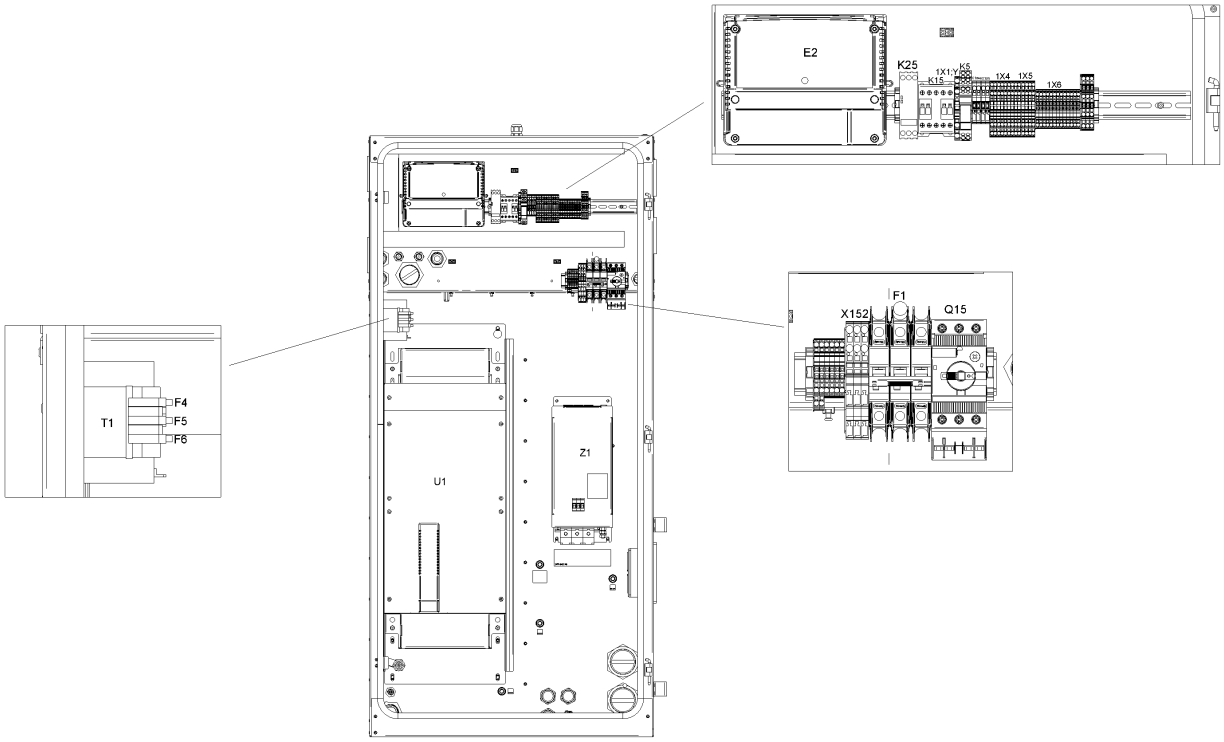
E2
K25
K15
1X1
1X4
1X5
1X6
F1
X152
Q15
T1
F4
F5
F6
U1
Z1

26.23 - IT Ancillaries GA 90 VSD+ - 200V-400V-500V/50Hz, 200V-230V-380V-460V-575V/60Hz - Pack (12/12/2018 - 16/12/2019)

((MOVOL:200V , MOVOL:230V , MOVOL:380V , MOVOL:460V , MOVOL:575V) + FREQ:60HZ , (MOVOL:200V , MOVOL:400V , MOVOL:500V) + FREQ:50HZ) + IDRY:N + MODEL:GA90VP_16

Ref	Part Number	Qty	Name	Validity	EL
	0697 9811 10	1	PLUG	(12/12/2018 - 16/12/2019)	
	Electrical legend:	Plug for smartbox hole			
	0989 3700 41	1	LOCKNUT	(12/12/2018 - 16/12/2019)	
	Electrical legend:	Nut for smartbox hole			

Legend:

FREQ:50HZ - Frequency:50 Hz
FREQ:60HZ - Frequency:60 Hz
IDRY:N - Integrated dryer:No
MODEL:GA90VP_16 - Model:GA 90VSD+
MOVOL:200V - Supply voltage:200 V
MOVOL:230V - Supply voltage:230 V
MOVOL:380V - Supply voltage:380 V
MOVOL:400V - Supply voltage:400 V
MOVOL:460V - Supply voltage:460 V
MOVOL:500V - Supply voltage:500 V
MOVOL:575V - Supply voltage:575 V

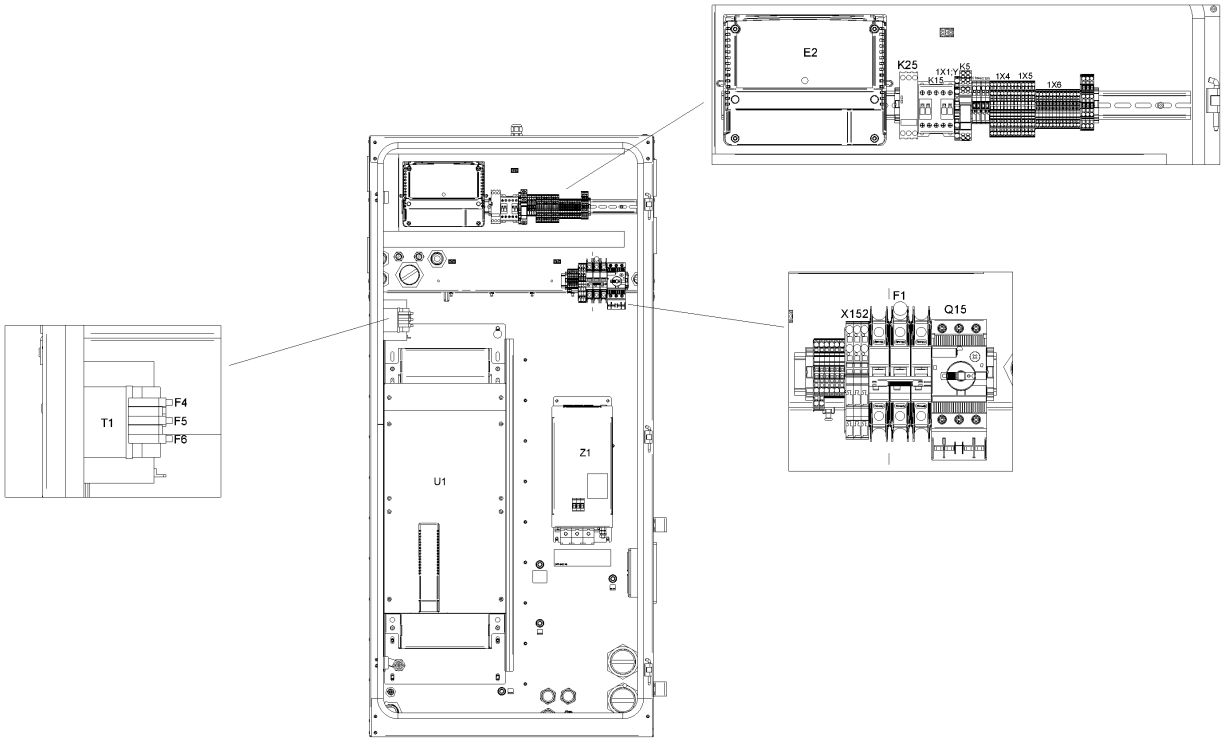
E2
K25
K15
1X1
1X4
1X5
1X6
T1
F4
F5
F6
U1
Z1
X152
F1
Q15

26.24 - IT Ancillaries GA 90 VSD+ - 200V-400V-500V/50Hz, 200V-230V-380V-460V-575V/60Hz - Pack (17/12/2019 - ...)

((MOVOL:200V , MOVOL:230V , MOVOL:380V , MOVOL:460V , MOVOL:575V) + FREQ:60HZ , (MOVOL:200V , MOVOL:400V , MOVOL:500V) + FREQ:50HZ) + IDRY:N + MODEL:GA90VP_16

Ref	Part Number	Qty	Name	Validity	EL
	1900 2202 47	1	CUBICLE	(17/12/2019 - ...)	
	9820 3000 31	1	ASSEMBLY DRAWING	(17/12/2019 - ...)	AD
	9820 3000 27	1	SERVICE DIAGRAM	(17/12/2019 - ...)	SD
	1622 3798 72	1	WIRE HARNESS	(17/12/2019 - ...)	Comm Cable
	1622 5099 04	1	DI CHANE CABLE (1400MM)	(17/12/2019 - ...)	
	Electrical legend:	Comm Cable Loose supply			
	1649 8006 00	1	CUBICLE	(17/12/2019 - ...)	MSA
	1649 8001 32	1	PLATE NEOS "D"	(17/12/2019 - ...)	
	Electrical legend:	Mounting plate			
	1649 8003 85	1	MOUNTING PLATE	(17/12/2019 - ...)	
	Electrical legend:	Mounting plate			
	1649 8002 39	1	WIRE HARNESS	(17/12/2019 - ...)	WH
	1649 8002 40	1	WIRE HARNESS	(17/12/2019 - ...)	WH
	1649 8002 73	1	WIRE HARNESS	(17/12/2019 - ...)	
	Electrical legend:	Pack Drain + Air filter switch			
	1649 8002 75	1	WIRE HARNESS	(17/12/2019 - ...)	
	Electrical legend:	Relative Humidity sensor			
	1649 8001 44	3	MOTOR CABLE	(17/12/2019 - ...)	
	Electrical legend:	Motor conduit			
	1649 8001 47	1	MOTOR CABLE	(17/12/2019 - ...)	
	Electrical legend:	Motor conduit			
	1625 3906 31	1	DATA LABEL	(17/12/2019 - ...)	Label
	1079 9901 68	1	WARNING LABEL	(17/12/2019 - ...)	Label
	1649 8005 00	0	LABEL	(17/12/2019 - ...)	Label
	1900 5350 19	1	INVERTER	(17/12/2019 - ...)	U1
	1631 2079 00	1	NANOPERMRING	(17/12/2019 - ...)	
	Electrical legend:	Nanoperm ring			
	0697 9811 17	2	PLUG	(17/12/2019 - ...)	
	Electrical legend:	Plug for transfo supply			
	0989 3700 48	2	NUT	(17/12/2019 - ...)	
	Electrical legend:	Nut for transfo supply			
	0698 5140 72	1	CABLE GLAND	(17/12/2019 - ...)	Fan
	0698 5140 71	1	CABLE GLAND	(17/12/2019 - ...)	
	Electrical legend:	Ambient sensor			
	0697 9809 20	1	LOCKNUT	(17/12/2019 - ...)	
	Electrical legend:	Ambient sensor			
	1089 9556 44	1	FAN WITH FILTER	(17/12/2019 - ...)	Cubicle fan
	1089 9556 72	4	AIR INLET WITHOUT FILTER	(17/12/2019 - ...)	Filter grid
	1088 0032 09	1	CONNECTOR	(17/12/2019 - ...)	X3
	1089 9572 06	1	LINE FILTER	(17/12/2019 - ...)	Z1 for 90kw
	1089 9562 04	1	STRAP	(17/12/2019 - ...)	HF-screen
	1089 9514 56	1	TRANSFORMER	(17/12/2019 - ...)	T1
	1089 9522 26	1	CIRCUIT BREAKER	(17/12/2019 - ...)	F1
	1089 9513 41	1	PUSH BUTTON	(17/12/2019 - ...)	S3
	1089 9513 28	1	HOLDER	(17/12/2019 - ...)	S3
	~~1089 9513 30~~	4	CONTACTOR	(17/12/2019 - ...)	S3
	Substituted by:	1089 9513 04 - CONTACT BLOCK (quantity: 1)			
	1088 0039 07	3	TERMINAL	(17/12/2019 - ...)	X152
	1088 0039 05	1	PLATE	(17/12/2019 - ...)	X152
	1088 0039 26	1	CONNECTOR	(17/12/2019 - ...)	
	Electrical legend:	X152 (remove coding pin 1,3)			
	1088 0037 99	4	PIN	(17/12/2019 - ...)	X152:1; 3
	~~1088 0031 81~~	7	END STOP BRACKET 6MM	(17/12/2019 - ...)	
	Electrical legend:	Connector/terminal rail			

Legend:

FREQ:50HZ - Frequency:50 Hz
FREQ:60HZ - Frequency:60 Hz
IDRY:N - Integrated dryer:No
MODEL:GA90VP_16 - Model:GA 90VSD+
MOVOL:200V - Supply voltage:200 V
MOVOL:230V - Supply voltage:230 V
MOVOL:380V - Supply voltage:380 V
MOVOL:400V - Supply voltage:400 V
MOVOL:460V - Supply voltage:460 V
MOVOL:500V - Supply voltage:500 V
MOVOL:575V - Supply voltage:575 V

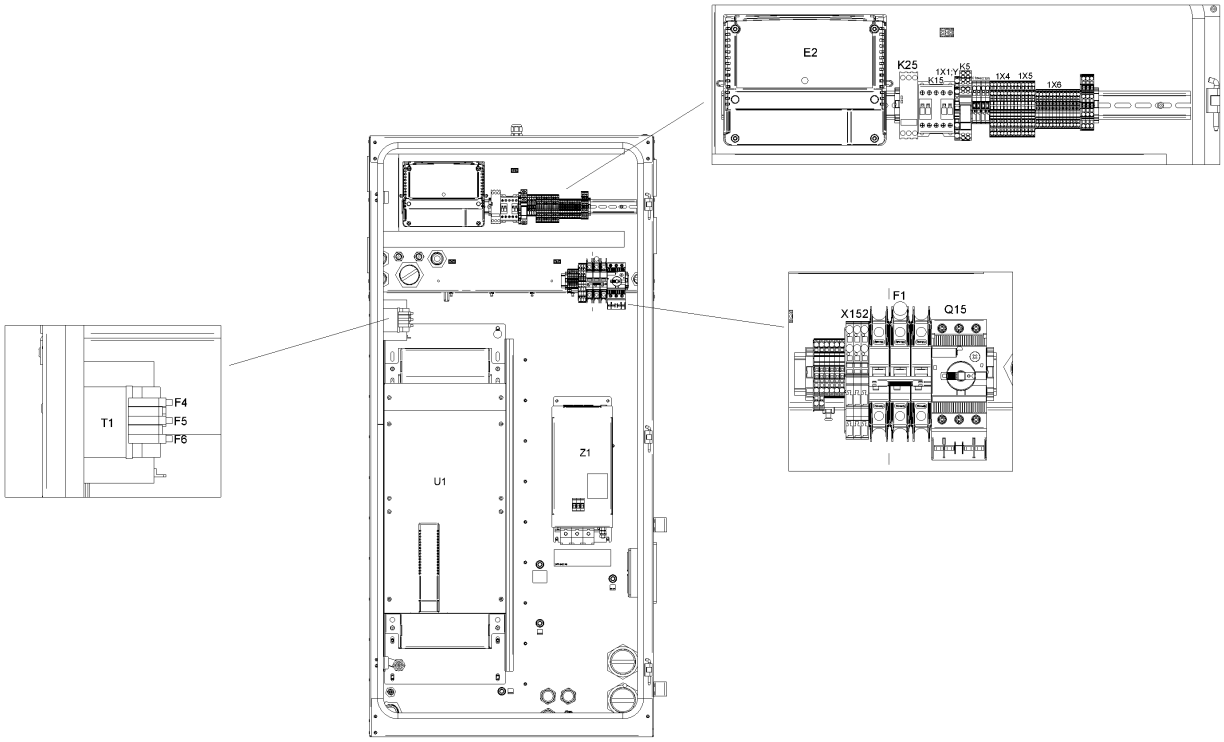
E2
K25
K15
1X1
1X4
1X5
1X6
T1
F4
F5
F6
U1
Z1
X152
F1
Q15

Ref	Part Number	Qty	Name	Validity	EL
	Substituted by:	1089 0577 82 - END RETAINER (quantity: 1)			
	1088 0039 38	2	TERMINAL	(17/12/2019 - ...)	1X11:2,5
	1088 0039 40	1	PLATE	(17/12/2019 - ...)	1X11
	1088 0039 34	4	TERMINAL	(17/12/2019 - ...)	
	Electrical legend:	1X11:30,301,34			
	1088 0039 35	1	PLATE	(17/12/2019 - ...)	1X11
	1088 0039 04	2	TERMINAL	(17/12/2019 - ...)	X104a
	1088 0037 99	2	PIN	(17/12/2019 - ...)	X104a/X105
	1088 0039 02	1	PLATE	(17/12/2019 - ...)	X104a
	1088 0039 07	2	TERMINAL	(17/12/2019 - ...)	X105
	1088 0039 05	1	PLATE	(17/12/2019 - ...)	X105
	1088 0039 34	13	TERMINAL	(17/12/2019 - ...)	1X6
	1088 0037 69	3	CONNECTOR	(17/12/2019 - ...)	1X7
	1088 0039 35	1	PLATE	(17/12/2019 - ...)	1X6
	1088 0040 37	1	END PLATE	(17/12/2019 - ...)	1X7
	1088 0039 36	9	TERMINAL	(17/12/2019 - ...)	1X4
	1088 0039 36	4	TERMINAL	(17/12/2019 - ...)	1X6
	1088 0039 37	1	END PLATE	(17/12/2019 - ...)	1X4
	1088 0039 37	1	END PLATE	(17/12/2019 - ...)	1X6
	1088 0039 37	1	END PLATE	(17/12/2019 - ...)	1X1:Y/D
	1088 0037 81	1	CONNECTOR	(17/12/2019 - ...)	2X27
	1088 0037 80	1	CONNECTOR	(17/12/2019 - ...)	2X28
	1088 0031 32	1	CONNECTOR	(17/12/2019 - ...)	2X30
	1088 0031 26	1	CONNECTOR 6-POLE	(17/12/2019 - ...)	2X31
	~~1089 9664 06~~	1	SWITCH	(17/12/2019 - ...)	Q15
	Substituted by:	1089 9551 97 - AUX.CONTACT CIRCUIT BREAKER (quantity: 1)			
	1089 9551 18	1	CIRCUIT BREAKER	(17/12/2019 - ...)	Q15
	1088 0038 26	1	TERMINAL	(17/12/2019 - ...)	1X1:Y/D
	1089 9602 79	1	CONTACTOR 110 V	(17/12/2019 - ...)	K15
	1089 9461 26	1	PHASE SEQUENCE RELAY	(17/12/2019 - ...)	K25
	1088 0032 17	1	RELAY 115 VAC	(17/12/2019 - ...)	K5
	0991 8011 21	AR	CABLE TRAY	(17/12/2019 - ...)	L=1384mm
	0697 9811 16	1	PLUG	(17/12/2019 - ...)	
	Electrical legend:	Plug for Dryer			
	0989 3700 47	1	LOCKNUT	(17/12/2019 - ...)	
	Electrical legend:	Locknut for dryer			
	0697 9811 11	2	PLUG	(17/12/2019 - ...)	
	Electrical legend:	Plug for FF Drain/LAT			
	0989 3700 42	2	NUT	(17/12/2019 - ...)	
	Electrical legend:	Locknut for FF Drain/LAT			
	1088 0031 13	1	CONNECTOR 13-POLE	(17/12/2019 - ...)	1X30
	1088 0037 82	1	CONNECTOR	(17/12/2019 - ...)	3X34
	0697 9811 13	1	PLUG	(17/12/2019 - ...)	
	Electrical legend:	Energy recovery			
	0989 3700 44	1	LOCKNUT	(17/12/2019 - ...)	
	Electrical legend:	Energy recovery			
	0697 9811 12	1	PLUG	(17/12/2019 - ...)	
	Electrical legend:	Control circuit of T10			
	0989 3700 43	1	NUT	(17/12/2019 - ...)	
	Electrical legend:	Control circuit of T10			
	0697 9811 10	1	PLUG	(17/12/2019 - ...)	
	Electrical legend:	Plug for smartbox hole			

Legend:

FREQ:50HZ - Frequency:50 Hz
FREQ:60HZ - Frequency:60 Hz
IDRY:N - Integrated dryer:No
MODEL:GA90VP_16 - Model:GA 90VSD+
MOVOL:200V - Supply voltage:200 V
MOVOL:230V - Supply voltage:230 V
MOVOL:380V - Supply voltage:380 V
MOVOL:400V - Supply voltage:400 V
MOVOL:460V - Supply voltage:460 V
MOVOL:500V - Supply voltage:500 V
MOVOL:575V - Supply voltage:575 V

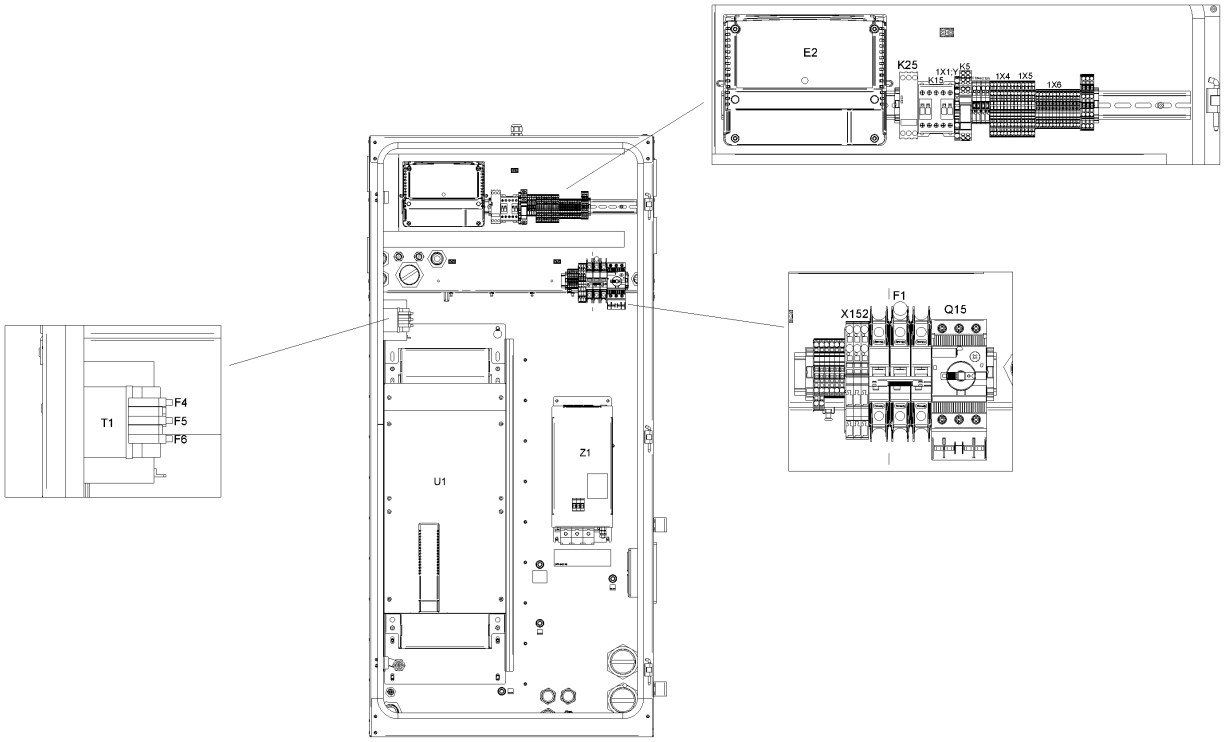
E2
K25
K15
1X1
1X4
1X5
1X6
T1
F4
F5
F6
U1
Z1
X152
F1
Q15

26.24 - IT Ancillaries GA 90 VSD+ - 200V-400V-500V/50Hz, 200V-230V-380V-460V-575V/60Hz - Pack (17/12/2019 - ...)

((MOVOL:200V , MOVOL:230V , MOVOL:380V , MOVOL:460V , MOVOL:575V) + FREQ:60HZ , (MOVOL:200V , MOVOL:400V , MOVOL:500V) + FREQ:50HZ) + IDRY:N + MODEL:GA90VP_16

Ref	Part Number	Qty	Name	Validity	EL
	0989 3700 41	1	LOCKNUT	(17/12/2019 - ...)	
	Electrical legend:	Nut for smartbox hole			
	1089 9556 37	1	AIR INLET WITH FILTER	(17/12/2019 - ...)	Fan Filter

Legend:

FREQ:50HZ - Frequency:50 Hz
FREQ:60HZ - Frequency:60 Hz
IDRY:N - Integrated dryer:No
MODEL:GA90VP_16 - Model:GA 90VSD+
MOVOL:200V - Supply voltage:200 V
MOVOL:230V - Supply voltage:230 V
MOVOL:380V - Supply voltage:380 V
MOVOL:400V - Supply voltage:400 V
MOVOL:460V - Supply voltage:460 V
MOVOL:500V - Supply voltage:500 V
MOVOL:575V - Supply voltage:575 V

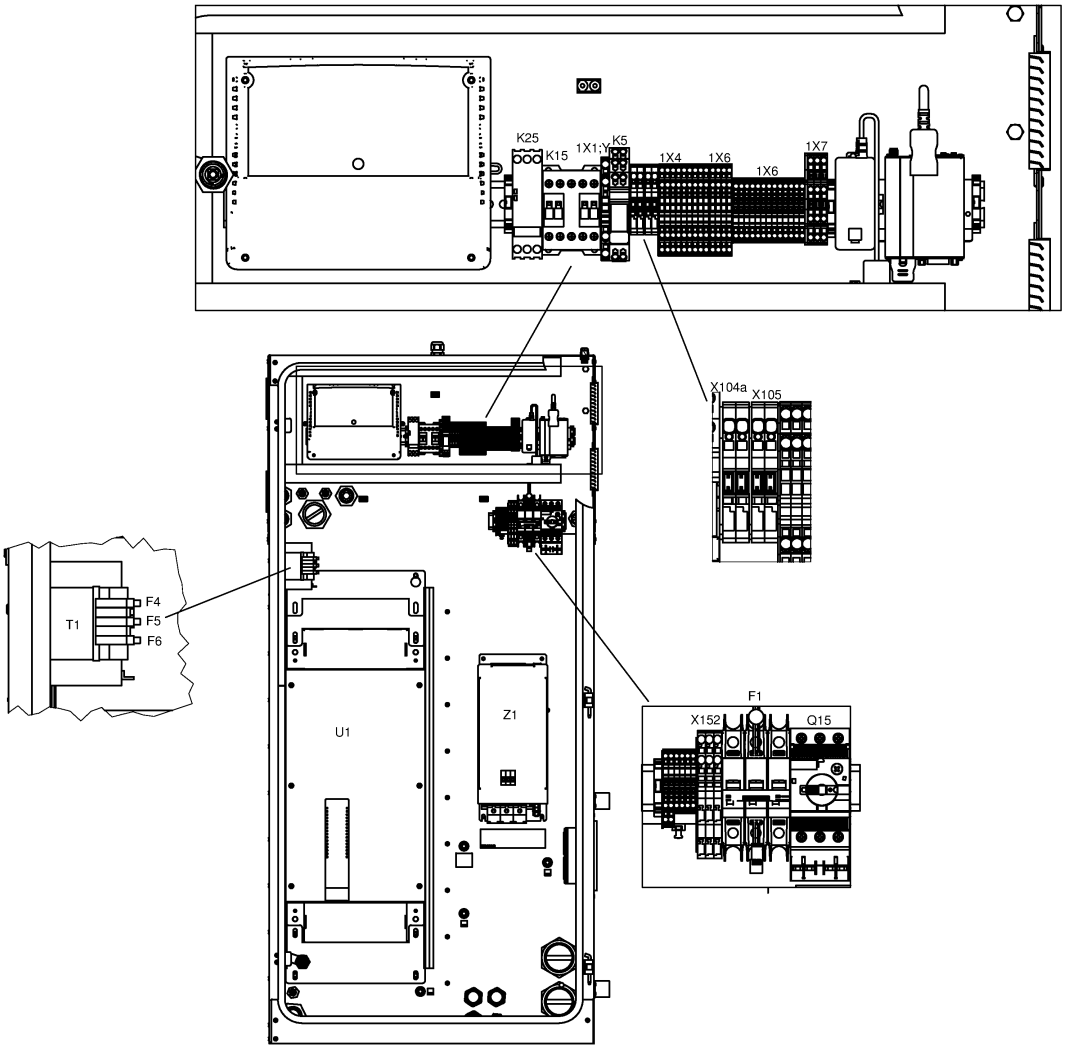
K25
K15
1X1;Y
K5
1X4
1X6
1X6
1X7
X104a
X105
T1
F4
F5
F6
U1
Z1
F1
X152
Q15

26.25 - IT Ancillaries GA 110 VSD+ - 200V-400V-500V/50Hz, 200V-230V-380V-460V-575V/60Hz - Pack (17/10/2017 - 11/12/2018)

((MOVOL:200V , MOVOL:230V , MOVOL:380V , MOVOL:460V , MOVOL:575V) + FREQ:60HZ , (MOVOL:200V , MOVOL:400V , MOVOL:500V) + FREQ:50HZ) + IDRY:N + MODEL:GA110VP_16

Ref	Part Number	Qty	Name	Validity	EL
	1900 2202 14	1	CUBICLE	(17/10/2017 - 11/12/2018)	
	9820 3000 21	1	CUBICLE LAYOUT	(17/10/2017 - 11/12/2018)	-
	9820 3000 22	1	SERVICE DIAGRAM	(17/10/2017 - 11/12/2018)	-
	1622 3798 70	1	WIRE HARNESS COMM CABLE	(17/10/2017 - 11/12/2018)	-
	1622 5099 04	1	DI CHANE CABLE (1400MM)	(17/10/2017 - 11/12/2018)	
	Electrical legend:	Comm Cable Loose supply			
	1649 8001 22	1	CUBICLE	(17/10/2017 - 11/12/2018)	-
•	1202 6584 02	AR	SEAL		-
	1649 8001 31	1	PLATE NEOS "E"	(17/10/2017 - 11/12/2018)	-
	1649 8003 85	1	MOUNTING PLATE	(17/10/2017 - 11/12/2018)	-
	1649 8002 39	1	WIRE HARNESS	(17/10/2017 - 11/12/2018)	-
	1649 8002 40	1	WIRE HARNESS	(17/10/2017 - 11/12/2018)	-
	1649 8002 73	1	WIRE HARNESS	(17/10/2017 - 11/12/2018)	
	Electrical legend:	Pack Drain + Air filter switch			
	1649 8002 75	1	WIRE HARNESS	(17/10/2017 - 11/12/2018)	
	Electrical legend:	Relative Humidity sensor			
	1649 8001 43	3	MOTOR CABLE	(17/10/2017 - 11/12/2018)	-
	1649 8001 46	1	MOTOR CABLE	(17/10/2017 - 11/12/2018)	-
		1	DATA LABEL	(17/10/2017 - 01/02/2018)	-
		1	DATA LABEL	(02/02/2018 - 11/12/2018)	-
	1079 9901 68	1	WARNING LABEL	(17/10/2017 - 11/12/2018)	-
	1900 5350 98	1	INVERTER	(17/10/2017 - 11/12/2018)	U1
	1631 2079 00	1	NANOPERMRING	(17/10/2017 - 11/12/2018)	-
	0697 9811 17	2	PLUG	(17/10/2017 - 11/12/2018)	
	Electrical legend:	Plug for transfo supply			
	0989 3700 48	2	NUT	(17/10/2017 - 11/12/2018)	
	Electrical legend:	Nut for transfo supply			
	0698 5140 72	1	CABLE GLAND	(17/10/2017 - 11/12/2018)	Fan
	0698 5140 71	1	CABLE GLAND	(17/10/2017 - 11/12/2018)	
	Electrical legend:	Ambient sensor			
	0697 9809 20	1	LOCKNUT	(17/10/2017 - 11/12/2018)	
	Electrical legend:	Ambient sensor			
	1089 9556 44	1	FAN WITH FILTER	(17/10/2017 - 11/12/2018)	Cubicle fan
		4	AIR INLET W/O FILTER	(17/10/2017 - 11/12/2018)	-
	Service kits:	2901 9901 02 - PREVENTIVE MAINTENANCE KIT - GA 90 VSD+, GA 110 VSD+ 2901 9900 96 - AIR FILTER KIT - GA 90 VSD+, GA 110 VSD+			
	1088 0032 09	1	CONNECTOR	(17/10/2017 - 11/12/2018)	X3
	1089 9572 04	1	LINE FILTER	(17/10/2017 - 11/12/2018)	Z1 for 110kw
	Electrical legend:	Z1 for 110kw			
	1089 9562 04	1	STRAP	(17/10/2017 - 11/12/2018)	HF-screen
	1089 9514 56	1	TRANSFORMER	(17/10/2017 - 11/12/2018)	T1
	1089 9522 26	1	CIRCUIT BREAKER	(17/10/2017 - 11/12/2018)	F1
	1089 9513 41	1	PUSH BUTTON	(17/10/2017 - 11/12/2018)	S3
	1089 9513 28	1	HOLDER	(17/10/2017 - 11/12/2018)	S3
	~~1089 9513 30~~	4	CONTACTOR	(17/10/2017 - 11/12/2018)	S3
	Substituted by:	1089 9513 04 - CONTACT BLOCK (quantity: 1)			
	1088 0031 02	1	CONNECTOR 2-POLE	(17/10/2017 - 11/12/2018)	
	Electrical legend:	X153 (Smartbox)			
	1088 0039 07	3	TERMINAL	(17/10/2017 - 11/12/2018)	X152
	1088 0039 05	1	PLATE	(17/10/2017 - 11/12/2018)	X152
	1088 0039 26	1	CONNECTOR	(17/10/2017 - 11/12/2018)	
	Electrical legend:	X152 (remove coding pin 1,3)			
	1088 0037 99	4	PIN	(17/10/2017 - 11/12/2018)	X152:1; 3

Legend:

FREQ:50HZ - Frequency:50 Hz
FREQ:60HZ - Frequency:60 Hz
IDRY:N - Integrated dryer:No
MODEL:GA110VP_16 - Model:GA 110VSD+
MOVOL:200V - Supply voltage:200 V
MOVOL:230V - Supply voltage:230 V
MOVOL:380V - Supply voltage:380 V
MOVOL:400V - Supply voltage:400 V
MOVOL:460V - Supply voltage:460 V
MOVOL:500V - Supply voltage:500 V
MOVOL:575V - Supply voltage:575 V

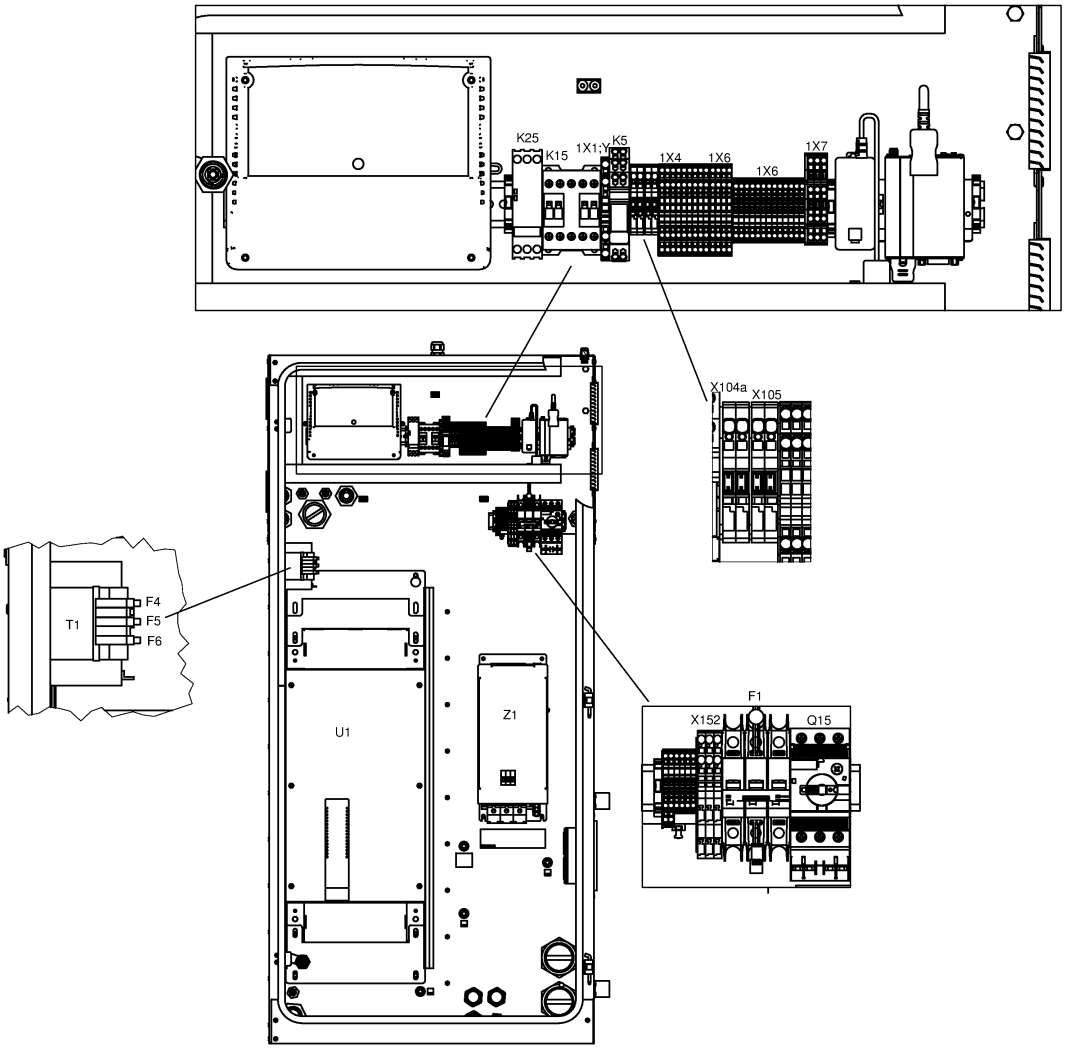
K25
K15
1X1
K5
1X4
1X6
1X6
1X7
X104a
X105
T1
F4
F5
F6
U1
Z1
F1
X152
Q15

26.25 - IT Ancillaries GA 110 VSD+ - 200V-400V-500V/50Hz, 200V-230V-380V-460V-575V/60Hz - Pack (17/10/2017 - 11/12/2018)

((MOVOL:200V , MOVOL:230V , MOVOL:380V , MOVOL:460V , MOVOL:575V) + FREQ:60HZ , (MOVOL:200V , MOVOL:400V , MOVOL:500V) + FREQ:50HZ) + IDRY:N + MODEL:GA110VP_16

Ref	Part Number	Qty	Name	Validity	EL
	~~1088 0031 81~~	7	END STOP BRACKET	(17/10/2017 - 11/12/2018)	
	Electrical legend:	Connector/terminal rail			
	Substituted by:	1089 0577 82 - END RETAINER (quantity: 1)			
	1088 0039 38	2	TERMINAL	(17/10/2017 - 11/12/2018)	1X11:2,5
	1088 0039 40	1	PLATE	(17/10/2017 - 11/12/2018)	1X11
	1088 0039 34	4	TERMINAL	(17/10/2017 - 11/12/2018)	
	Electrical legend:	1X11:30,301,34			
	1088 0039 35	1	PLATE	(17/10/2017 - 11/12/2018)	1X11
	1088 0039 04	2	TERMINAL	(17/10/2017 - 11/12/2018)	X104a
	1088 0037 99	2	PIN	(17/10/2017 - 11/12/2018)	X104a/X105
	1088 0039 02	1	PLATE	(17/10/2017 - 11/12/2018)	X104a
	1088 0039 04	2	TERMINAL	(17/10/2017 - 11/12/2018)	
	1088 0039 02	1	PLATE	(17/10/2017 - 11/12/2018)	
	1088 0039 34	13	TERMINAL	(17/10/2017 - 11/12/2018)	1X6
	1088 0037 69	3	CONNECTOR	(17/10/2017 - 11/12/2018)	1X7
	1088 0039 35	1	PLATE	(17/10/2017 - 11/12/2018)	1X6
	1088 0040 37	1	END PLATE	(17/10/2017 - 11/12/2018)	1X7
	1088 0039 36	9	TERMINAL	(17/10/2017 - 11/12/2018)	1X4
	1088 0039 36	4	TERMINAL	(17/10/2017 - 11/12/2018)	1X6
	1088 0039 37	1	END PLATE	(17/10/2017 - 11/12/2018)	1X4
	1088 0039 37	1	END PLATE	(17/10/2017 - 11/12/2018)	1X6
	1088 0039 37	1	END PLATE	(17/10/2017 - 11/12/2018)	1X1:Y/D
	1088 0037 81	1	CONNECTOR	(17/10/2017 - 11/12/2018)	2X27
	1088 0037 80	1	CONNECTOR	(17/10/2017 - 11/12/2018)	2X28
	1088 0031 32	1	CONNECTOR	(17/10/2017 - 11/12/2018)	2X30
	1088 0031 26	1	CONNECTOR 6-POLE	(17/10/2017 - 11/12/2018)	2X31
	~~1089 9664 06~~	1	SWITCH	(17/10/2017 - 11/12/2018)	Q15
	Substituted by:	1089 9551 97 - AUX.CONTACT CIRCUIT BREAKER (quantity: 1)			
	1089 9551 19	1	CIRCUIT BREAKER	(17/10/2017 - 11/12/2018)	Q15
	1088 0038 26	1	TERMINAL	(17/10/2017 - 11/12/2018)	1X1:Y/D
	1089 9602 79	1	CONTACTOR 110 V	(17/10/2017 - 11/12/2018)	K15
	1089 9461 26	1	PHASE SEQUENCE RELAY	(17/10/2017 - 11/12/2018)	K25
	1088 0032 17	1	RELAY 115 VAC	(17/10/2017 - 11/12/2018)	K5
	0991 8011 21	AR	CABLE TRAY	(17/10/2017 - 11/12/2018)	L=1384mm
	0697 9811 16	1	PLUG	(17/10/2017 - 11/12/2018)	
	Electrical legend:	Plug for Dryer			
	0989 3700 47	1	LOCKNUT	(17/10/2017 - 11/12/2018)	
	Electrical legend:	Locknut for dryer			
	0697 9811 11	2	PLUG	(17/10/2017 - 11/12/2018)	
	Electrical legend:	Plug for FF Drain/LAT			
	0989 3700 42	2	NUT	(17/10/2017 - 11/12/2018)	
	Electrical legend:	Locknut for FF Drain/LAT			
	1088 0031 13	1	CONNECTOR 13-POLE	(17/10/2017 - 11/12/2018)	1X30
	1088 0037 82	1	CONNECTOR	(17/10/2017 - 11/12/2018)	3X34
	0697 9811 13	1	PLUG	(17/10/2017 - 11/12/2018)	
	Electrical legend:	Energy recovery			
	0989 3700 44	1	LOCKNUT	(17/10/2017 - 11/12/2018)	
	Electrical legend:	Energy recovery			
	0697 9811 12	1	PLUG	(17/10/2017 - 11/12/2018)	
	Electrical legend:	Control circuit of T10			
	0989 3700 43	1	NUT	(17/10/2017 - 11/12/2018)	
	Electrical legend:	Control circuit of T10			

Legend:

FREQ:50HZ - Frequency:50 Hz
FREQ:60HZ - Frequency:60 Hz
IDRY:N - Integrated dryer:No
MODEL:GA110VP_16 - Model:GA 110VSD+
MOVOL:200V - Supply voltage:200 V
MOVOL:230V - Supply voltage:230 V
MOVOL:380V - Supply voltage:380 V
MOVOL:400V - Supply voltage:400 V
MOVOL:460V - Supply voltage:460 V
MOVOL:500V - Supply voltage:500 V
MOVOL:575V - Supply voltage:575 V

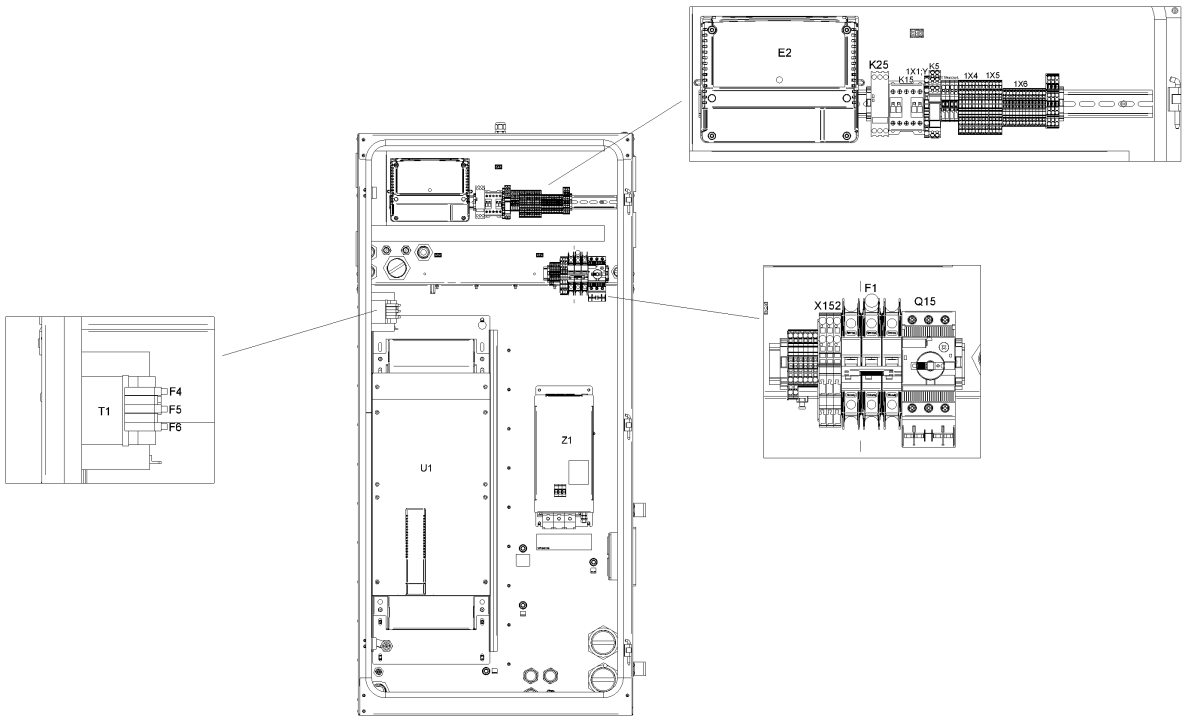
E2
K25
K5
K15
1X1
1X4
1X5
1X6
F1
X152
Q15
T1
F4
F5
F6
U1
Z1

26.26 - IT Ancillaries GA 110 VSD+ - 200V-400V-500V/50Hz, 200V-230V-380V-460V-575V/60Hz - Pack (12/12/2018 - 04/02/2020)

((MOVOL:200V , MOVOL:230V , MOVOL:380V , MOVOL:460V , MOVOL:575V) + FREQ:60HZ , (MOVOL:200V , MOVOL:400V , MOVOL:500V) + FREQ:50HZ) + IDRY:N + MODEL:GA110VP_16

Ref	Part Number	Qty	Name	Validity	EL
	1900 2202 33	1	CUBICLE	(12/12/2018 - ...)	
	9820 3000 31	1	ASSEMBLY DRAWING	(12/12/2018 - 04/02/2020)	AD
	9820 3000 27	1	SERVICE DIAGRAM	(12/12/2018 - 04/02/2020)	SD
	1622 3798 72	1	WIRE HARNESS	(12/12/2018 - 04/02/2020)	Comm Cable
	1622 5099 04	1	DI CHANE CABLE (1400MM)	(12/12/2018 - 04/02/2020)	
	Electrical legend:	Comm Cable Loose supply			
	1649 8001 22	1	CUBICLE	(12/12/2018 - 04/02/2020)	MSA
	1649 8001 31	1	PLATE NEOS "E"	(12/12/2018 - 04/02/2020)	
	Electrical legend:	Mounting plate			
	1649 8003 85	1	MOUNTING PLATE	(12/12/2018 - 04/02/2020)	
	Electrical legend:	Mounting plate			
	1649 8002 39	1	WIRE HARNESS	(12/12/2018 - 04/02/2020)	WH
	1649 8002 40	1	WIRE HARNESS	(12/12/2018 - 04/02/2020)	WH
	1649 8002 73	1	WIRE HARNESS	(12/12/2018 - 04/02/2020)	
	Electrical legend:	Pack Drain + Air filter switch			
	1649 8002 75	1	WIRE HARNESS	(12/12/2018 - 04/02/2020)	
	Electrical legend:	Relative Humidity sensor			
	1649 8001 43	3	MOTOR CABLE	(12/12/2018 - 04/02/2020)	
	Electrical legend:	Motor conduit			
	1649 8001 46	1	MOTOR CABLE	(12/12/2018 - 04/02/2020)	
	Electrical legend:	Motor conduit			
		1	DATALABEL	(12/12/2018 - 04/02/2020)	Label
	1079 9901 68	1	WARNING LABEL	(12/12/2018 - 04/02/2020)	Label
	1649 8005 00	-	LABEL	(12/12/2018 - 04/02/2020)	Label
	1900 5350 98	1	INVERTER	(12/12/2018 - 04/02/2020)	U1
	1631 2079 00	1	NANOPERMRING	(12/12/2018 - 04/02/2020)	
	Electrical legend:	Nanoperm ring			
	0697 9811 17	2	PLUG	(12/12/2018 - 04/02/2020)	
	Electrical legend:	Plug for transfo supply			
	0989 3700 48	2	NUT	(12/12/2018 - 04/02/2020)	
	Electrical legend:	Nut for transfo supply			
	0698 5140 72	1	CABLE GLAND	(12/12/2018 - 04/02/2020)	Fan
	0698 5140 71	1	CABLE GLAND	(12/12/2018 - 04/02/2020)	
	Electrical legend:	Ambient sensor			
	0697 9809 20	1	LOCKNUT	(12/12/2018 - 04/02/2020)	
	Electrical legend:	Ambient sensor			
	1089 9556 44	1	FAN WITH FILTER	(12/12/2018 - 04/02/2020)	Cubicle fan
	1089 9556 72	4	AIR INLET WITHOUT FILTER	(12/12/2018 - 04/02/2020)	Filter grid
	1088 0032 09	1	CONNECTOR	(12/12/2018 - 04/02/2020)	X3
	1089 9572 04	1	LINE FILTER	(12/12/2018 - 04/02/2020)	Z1 for 110kw
	Electrical legend:	Z1 for 110kw			
	1089 9562 04	1	STRAP	(12/12/2018 - 04/02/2020)	HF-screen
	1089 9514 56	1	TRANSFORMER	(12/12/2018 - 04/02/2020)	T1
	1089 9522 26	1	CIRCUIT BREAKER	(12/12/2018 - 04/02/2020)	F1
	1089 9513 41	1	PUSH BUTTON	(12/12/2018 - 04/02/2020)	S3
	1089 9513 28	1	HOLDER	(12/12/2018 - 04/02/2020)	S3
	~~1089 9513 30~~	4	CONTACTOR	(12/12/2018 - 04/02/2020)	S3
	Substituted by:	1089 9513 04 - CONTACT BLOCK (quantity: 1)			
	1088 0031 02	1	CONNECTOR 2-POLE	(12/12/2018 - 17/02/2019)	
	1088 0039 07	3	TERMINAL	(12/12/2018 - 04/02/2020)	X152
	1088 0039 05	1	PLATE	(12/12/2018 - 04/02/2020)	X152
	1088 0039 26	1	CONNECTOR	(12/12/2018 - 04/02/2020)	
	Electrical legend:	X152 (remove coding pin 1,3)			
	1088 0037 99	4	PIN	(12/12/2018 - 04/02/2020)	X152:1; 3

Legend:

FREQ:50HZ - Frequency:50 Hz
FREQ:60HZ - Frequency:60 Hz
IDRY:N - Integrated dryer:No
MODEL:GA110VP_16 - Model:GA 110VSD+
MOVOL:200V - Supply voltage:200 V
MOVOL:230V - Supply voltage:230 V
MOVOL:380V - Supply voltage:380 V
MOVOL:400V - Supply voltage:400 V
MOVOL:460V - Supply voltage:460 V
MOVOL:500V - Supply voltage:500 V
MOVOL:575V - Supply voltage:575 V

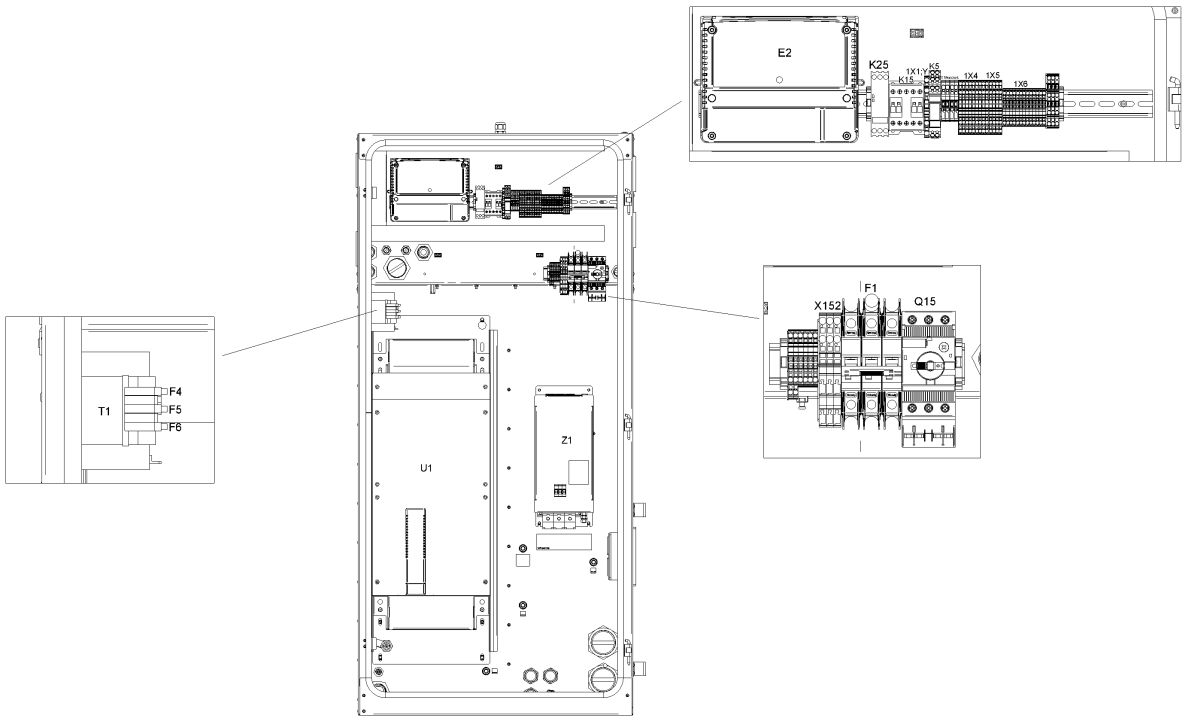
E2
K25
K5
K15
1X1
1X4
1X5
1X6
F1
X152
Q15
T1
F4
F5
F6
U1
Z1

Ref	Part Number	Qty	Name	Validity	EL
	~~1088 0031 81~~	7	END STOP BRACKET 6MM	(12/12/2018 - 04/02/2020)	
	Electrical legend:	Connector/terminal rail			
	Substituted by:	1089 0577 82 - END RETAINER (quantity: 1)			
	1088 0039 38	2	TERMINAL	(12/12/2018 - 04/02/2020)	1X11:2,5
	1088 0039 40	1	PLATE	(12/12/2018 - 04/02/2020)	1X11
	1088 0039 34	4	TERMINAL	(12/12/2018 - 04/02/2020)	
	Electrical legend:	1X11:30,301,34			
	1088 0039 35	1	PLATE	(12/12/2018 - 04/02/2020)	1X11
	1088 0039 04	2	TERMINAL	(12/12/2018 - 04/02/2020)	X104a
	1088 0037 99	2	PIN	(12/12/2018 - 04/02/2020)	X104a/X105
	1088 0039 02	1	PLATE	(12/12/2018 - 04/02/2020)	X104a
	1088 0039 07	2	TERMINAL	(12/12/2018 - 04/02/2020)	X105
	1088 0039 05	1	PLATE	(12/12/2018 - 04/02/2020)	X105
	1088 0039 34	13	TERMINAL	(12/12/2018 - 04/02/2020)	1X6
	1088 0037 69	3	CONNECTOR	(12/12/2018 - 04/02/2020)	1X7
	1088 0039 35	1	PLATE	(12/12/2018 - 04/02/2020)	1X6
	1088 0040 37	1	END PLATE	(12/12/2018 - 04/02/2020)	1X7
	1088 0039 36	9	TERMINAL	(12/12/2018 - 04/02/2020)	1X4
	1088 0039 36	4	TERMINAL	(12/12/2018 - 04/02/2020)	1X6
	1088 0039 37	1	END PLATE	(12/12/2018 - 04/02/2020)	1X4
	1088 0039 37	1	END PLATE	(12/12/2018 - 04/02/2020)	1X6
	1088 0039 37	1	END PLATE	(12/12/2018 - 04/02/2020)	1X1:Y/D
	1088 0037 81	1	CONNECTOR	(12/12/2018 - 04/02/2020)	2X27
	1088 0037 80	1	CONNECTOR	(12/12/2018 - 04/02/2020)	2X28
	1088 0031 32	1	CONNECTOR	(12/12/2018 - 04/02/2020)	2X30
	1088 0031 26	1	CONNECTOR 6-POLE	(12/12/2018 - 04/02/2020)	2X31
	~~1089 9664 06~~	1	SWITCH	(12/12/2018 - 04/02/2020)	Q15
	Substituted by:	1089 9551 97 - AUX.CONTACT CIRCUIT BREAKER (quantity: 1)			
	1089 9551 19	1	BREAKER CIRCUIT	(12/12/2018 - 04/02/2020)	Q15
	1088 0038 26	1	TERMINAL	(12/12/2018 - 04/02/2020)	1X1:Y/D
	1089 9602 79	1	CONTACTOR 110 V	(12/12/2018 - 04/02/2020)	K15
	1089 9461 26	1	PHASE SEQUENCE RELAY	(12/12/2018 - 04/02/2020)	K25
	1088 0032 17	1	RELAY 115 VAC	(12/12/2018 - 04/02/2020)	K5
	0991 8011 21	AR	CABLE TRAY	(12/12/2018 - 04/02/2020)	L=1384mm
	0697 9811 16	1	PLUG	(12/12/2018 - 04/02/2020)	
	Electrical legend:	Plug for Dryer			
	0989 3700 47	1	LOCKNUT	(12/12/2018 - 04/02/2020)	
	Electrical legend:	Locknut for dryer			
	0697 9811 11	2	PLUG	(12/12/2018 - 04/02/2020)	
	Electrical legend:	Plug for FF Drain/LAT			
	0989 3700 42	2	NUT	(12/12/2018 - 04/02/2020)	
	Electrical legend:	Locknut for FF Drain/LAT			
	1088 0031 13	1	CONNECTOR 13-POLE	(12/12/2018 - 04/02/2020)	1X30
	1088 0037 82	1	CONNECTOR	(12/12/2018 - 04/02/2020)	3X34
	0697 9811 13	1	PLUG	(12/12/2018 - 04/02/2020)	
	Electrical legend:	Energy recovery			
	0989 3700 44	1	LOCKNUT	(12/12/2018 - 04/02/2020)	
	Electrical legend:	Energy recovery			
	0697 9811 12	1	PLUG	(12/12/2018 - 04/02/2020)	
	Electrical legend:	Control circuit of T10			
	0989 3700 43	1	NUT	(12/12/2018 - 04/02/2020)	
	Electrical legend:	Control circuit of T10			

Legend:

FREQ:50HZ - Frequency:50 Hz
FREQ:60HZ - Frequency:60 Hz
IDRY:N - Integrated dryer:No
MODEL:GA110VP_16 - Model:GA 110VSD+
MOVOL:200V - Supply voltage:200 V
MOVOL:230V - Supply voltage:230 V
MOVOL:380V - Supply voltage:380 V
MOVOL:400V - Supply voltage:400 V
MOVOL:460V - Supply voltage:460 V
MOVOL:500V - Supply voltage:500 V
MOVOL:575V - Supply voltage:575 V

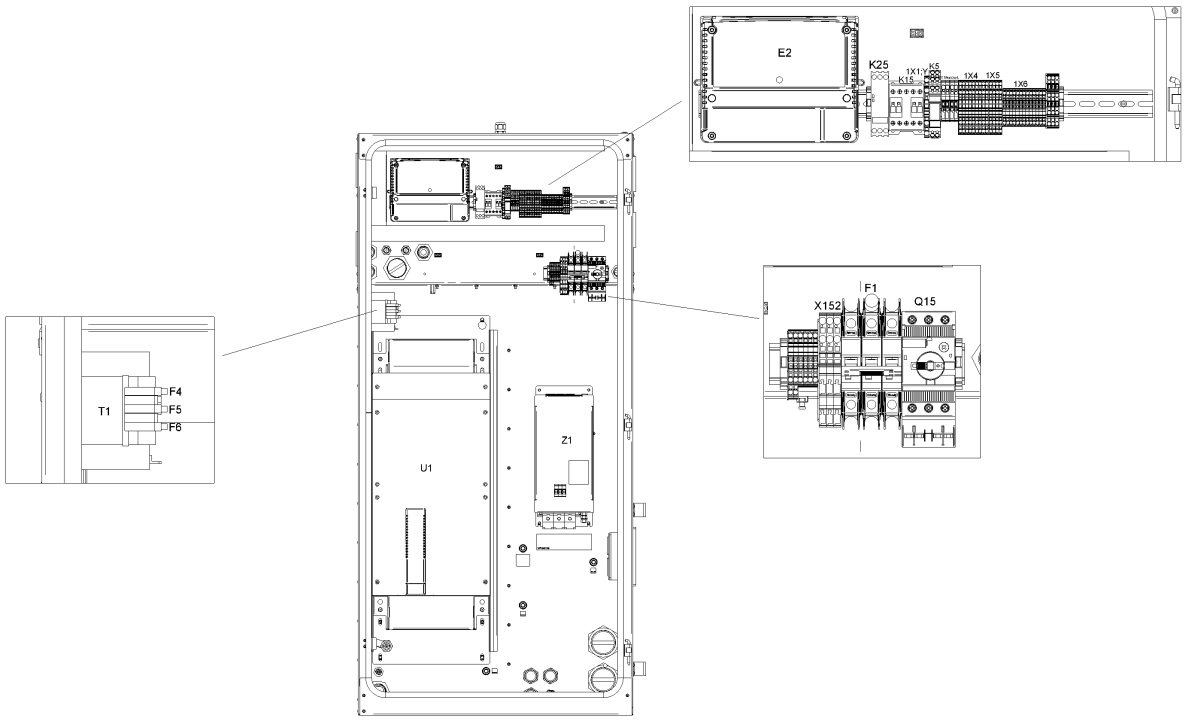
E2
K25
K5
K15
1X1
1X4
1X5
1X6
F1
X152
Q15
T1
F4
F5
F6
U1
Z1

26.26 - IT Ancillaries GA 110 VSD+ - 200V-400V-500V/50Hz, 200V-230V-380V-460V-575V/60Hz - Pack (12/12/2018 - 04/02/2020)

((MOVOL:200V , MOVOL:230V , MOVOL:380V , MOVOL:460V , MOVOL:575V) + FREQ:60HZ , (MOVOL:200V , MOVOL:400V , MOVOL:500V) + FREQ:50HZ) + IDRY:N + MODEL:GA110VP_16

Ref	Part Number	Qty	Name	Validity	EL
	0697 9811 10	1	PLUG	(12/12/2018 - 04/02/2020)	
	Electrical legend:	Plug for smartbox hole			
	0989 3700 41	1	LOCKNUT	(12/12/2018 - 04/02/2020)	
	Electrical legend:	Nut for smartbox hole			

Legend:

FREQ:50HZ - Frequency:50 Hz
FREQ:60HZ - Frequency:60 Hz
IDRY:N - Integrated dryer:No
MODEL:GA110VP_16 - Model:GA 110VSD+
MOVOL:200V - Supply voltage:200 V
MOVOL:230V - Supply voltage:230 V
MOVOL:380V - Supply voltage:380 V
MOVOL:400V - Supply voltage:400 V
MOVOL:460V - Supply voltage:460 V
MOVOL:500V - Supply voltage:500 V
MOVOL:575V - Supply voltage:575 V

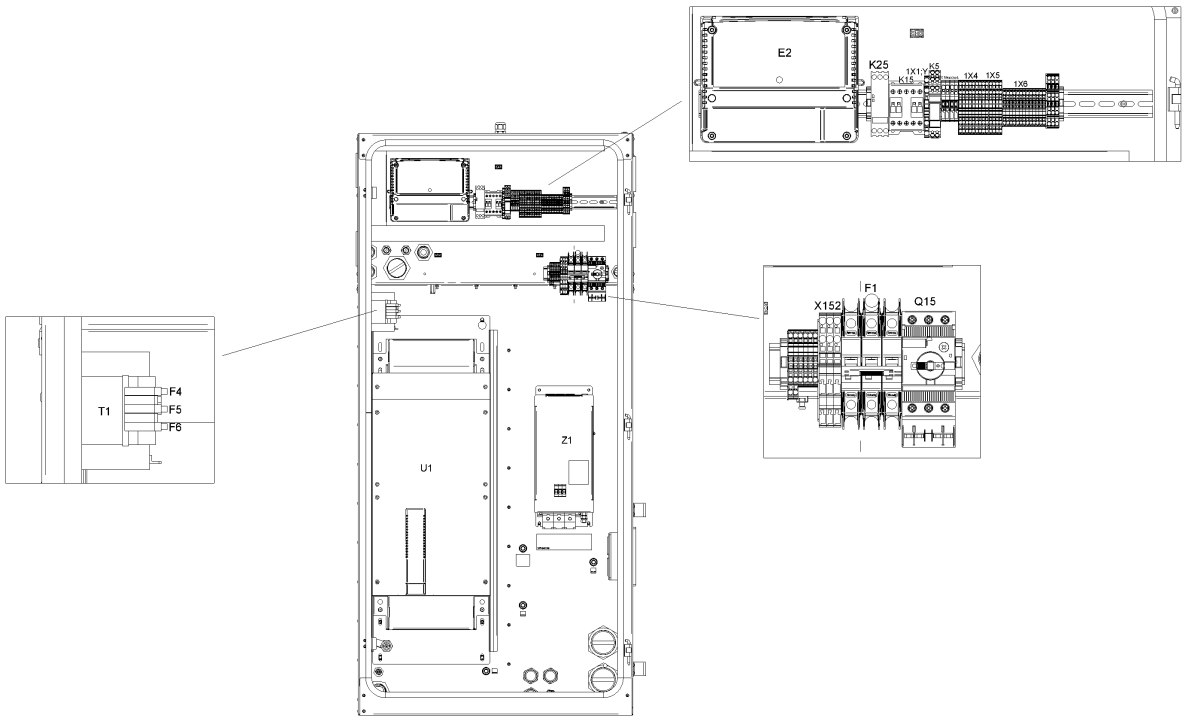
E2
K25
K15
1X1
K5
1X4
1X5
1X6
F1
X152
Q15
T1
F4
F5
F6
U1
Z1

26.27 - IT Ancillaries GA 110 VSD+ - 200V-400V-500V/50Hz, 200V-230V-380V-460V-575V/60Hz - Pack (05/02/2020 - ...)

((MOVOL:200V , MOVOL:230V , MOVOL:380V , MOVOL:460V , MOVOL:575V) + FREQ:60HZ , (MOVOL:200V , MOVOL:400V , MOVOL:500V) + FREQ:50HZ) + IDRY:N + MODEL:GA110VP_16

Ref	Part Number	Qty	Name	Validity	EL
	1900 2202 53	1	CUBICLE	(05/02/2020 - ...)	
	9820 3000 31	1	ASSEMBLY DRAWING	(05/02/2020 - ...)	AD
	9820 3000 27	1	SERVICE DIAGRAM	(05/02/2020 - ...)	SD
	1622 3798 72	1	WIRE HARNESS	(05/02/2020 - ...)	Comm Cable
	1622 5099 04	1	DI CHANE CABLE (1400MM)	(05/02/2020 - ...)	
	Electrical legend:	Comm Cable Loose supply			
	1649 8006 00	1	CUBICLE	(05/02/2020 - ...)	MSA
	1649 8001 31	1	PLATE NEOS "E"	(05/02/2020 - ...)	
	Electrical legend:	Mounting plate			
	1649 8003 85	1	MOUNTING PLATE	(05/02/2020 - ...)	
	Electrical legend:	Mounting plate			
	1649 8002 39	1	WIRE HARNESS	(05/02/2020 - ...)	WH
	1649 8002 40	1	WIRE HARNESS	(05/02/2020 - ...)	WH
	1649 8002 73	1	WIRE HARNESS	(05/02/2020 - ...)	
	Electrical legend:	Pack Drain + Air filter switch			
	1649 8002 75	1	WIRE HARNESS	(05/02/2020 - ...)	
	Electrical legend:	Relative Humidity sensor			
	1649 8001 43	3	MOTOR CABLE	(05/02/2020 - ...)	
	Electrical legend:	Motor conduit			
	1649 8001 46	1	MOTOR CABLE	(05/02/2020 - ...)	
	Electrical legend:	Motor conduit			
	1625 3906 31	1	DATA LABEL	(05/02/2020 - ...)	Label
	1079 9901 68	1	WARNING LABEL	(05/02/2020 - ...)	Label
	1649 8005 00	0	LABEL	(05/02/2020 - ...)	Label
	1900 5350 98	1	INVERTER	(05/02/2020 - ...)	U1
	1631 2079 00	1	NANOPERMRING	(05/02/2020 - ...)	
	Electrical legend:	Nanoperm ring			
	0697 9811 17	2	PLUG	(05/02/2020 - ...)	
	Electrical legend:	Plug for transfo supply			
	0989 3700 48	2	NUT	(05/02/2020 - ...)	
	Electrical legend:	Nut for transfo supply			
	0698 5140 72	1	CABLE GLAND	(05/02/2020 - ...)	Fan
	0698 5140 71	1	CABLE GLAND	(05/02/2020 - ...)	
	Electrical legend:	Ambient sensor			
	0697 9809 20	1	LOCKNUT	(05/02/2020 - ...)	
	Electrical legend:	Ambient sensor			
	1089 9556 44	1	FAN WITH FILTER	(05/02/2020 - ...)	Cubicle fan
	1089 9556 72	4	AIR INLET WITHOUT FILTER	(05/02/2020 - ...)	Filter grid
	1088 0032 09	1	CONNECTOR	(05/02/2020 - ...)	X3
	1089 9572 04	1	LINE FILTER	(05/02/2020 - ...)	Z1 for 110kw
	Electrical legend:	Z1 for 110kw			
	1089 9562 04	1	STRAP	(05/02/2020 - ...)	HF-screen
	1089 9514 56	1	TRANSFORMER	(05/02/2020 - ...)	T1
	1089 9522 26	1	CIRCUIT BREAKER	(05/02/2020 - ...)	F1
	1089 9513 41	1	PUSH BUTTON	(05/02/2020 - ...)	S3
	1089 9513 28	1	HOLDER	(05/02/2020 - ...)	S3
	~~1089 9513 30~~	4	CONTACTOR	(05/02/2020 - ...)	S3
	Substituted by:	1089 9513 04 - CONTACT BLOCK (quantity: 1)			
	1088 0039 07	3	TERMINAL	(05/02/2020 - ...)	X152
	1088 0039 05	1	PLATE	(05/02/2020 - ...)	X152
	1088 0039 26	1	CONNECTOR	(05/02/2020 - ...)	
	Electrical legend:	X152 (remove coding pin 1,3)			
	1088 0037 99	4	PIN	(05/02/2020 - ...)	X152:1; 3
	~~1088 0031 81~~	7	END STOP BRACKET 6MM	(05/02/2020 - ...)	

Legend:

FREQ:50HZ - Frequency:50 Hz
FREQ:60HZ - Frequency:60 Hz
IDRY:N - Integrated dryer:No
MODEL:GA110VP_16 - Model:GA 110VSD+
MOVOL:200V - Supply voltage:200 V
MOVOL:230V - Supply voltage:230 V
MOVOL:380V - Supply voltage:380 V
MOVOL:400V - Supply voltage:400 V
MOVOL:460V - Supply voltage:460 V
MOVOL:500V - Supply voltage:500 V
MOVOL:575V - Supply voltage:575 V

26.27 - IT Ancillaries GA 110 VSD+ - 200V-400V-500V/50Hz, 200V-230V-380V-460V-575V/60Hz - Pack (05/02/2020 - ...)

((MOVOL:200V , MOVOL:230V , MOVOL:380V , MOVOL:460V , MOVOL:575V) + FREQ:60HZ , (MOVOL:200V , MOVOL:400V , MOVOL:500V) + FREQ:50HZ) + IDRY:N + MODEL:GA110VP_16

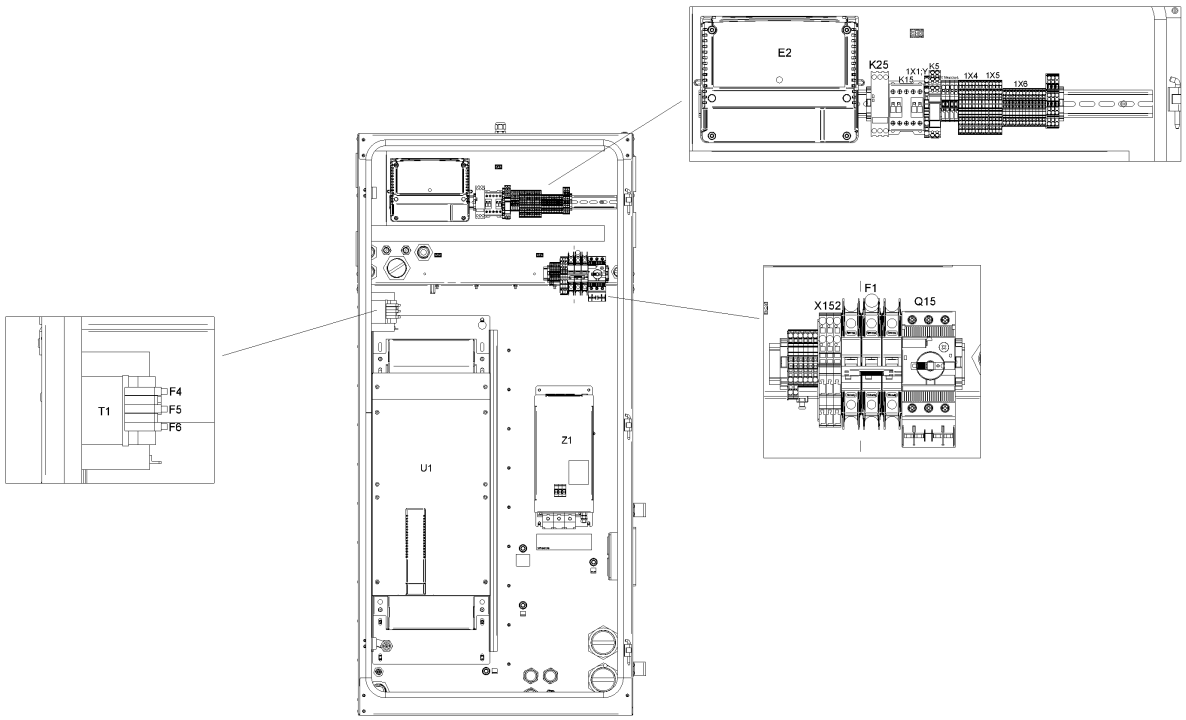

26.27 - IT Ancillaries GA 110 VSD+ - 200V-400V-500V/50Hz, 200V-230V-380V-460V-575V/60Hz - Pack (05/02/2020 - ...)

((MOVOL:200V , MOVOL:230V , MOVOL:380V , MOVOL:460V , MOVOL:575V) + FREQ:60HZ , (MOVOL:200V , MOVOL:400V , MOVOL:500V) + FREQ:50HZ) + IDRY:N + MODEL:GA110VP_16

Ref	Part Number	Qty	Name	Validity	EL
	Electrical legend:	Connector/terminal rail			
	Substituted by:	1089 0577 82 - END RETAINER (quantity: 1)			
	1088 0039 38	2	TERMINAL	(05/02/2020 - ...)	1X11:2,5
	1088 0039 40	1	PLATE	(05/02/2020 - ...)	1X11
	1088 0039 34	4	TERMINAL	(05/02/2020 - ...)	
	Electrical legend:	1X11:30,301,34			
	1088 0039 35	1	PLATE	(05/02/2020 - ...)	1X11
	1088 0039 04	2	TERMINAL	(05/02/2020 - ...)	X104a
	1088 0037 99	2	PIN	(05/02/2020 - ...)	X104a/X105
	1088 0039 02	1	PLATE	(05/02/2020 - ...)	X104a
	1088 0039 07	2	TERMINAL	(05/02/2020 - ...)	X105
	1088 0039 05	1	PLATE	(05/02/2020 - ...)	X105
	1088 0039 34	13	TERMINAL	(05/02/2020 - ...)	1X6
	1088 0037 69	3	CONNECTOR	(05/02/2020 - ...)	1X7
	1088 0039 35	1	PLATE	(05/02/2020 - ...)	1X6
	1088 0040 37	1	END PLATE	(05/02/2020 - ...)	1X7
	1088 0039 36	9	TERMINAL	(05/02/2020 - ...)	1X4
	1088 0039 36	4	TERMINAL	(05/02/2020 - ...)	1X6
	1088 0039 37	1	END PLATE	(05/02/2020 - ...)	1X4
	1088 0039 37	1	END PLATE	(05/02/2020 - ...)	1X6
	1088 0039 37	1	END PLATE	(05/02/2020 - ...)	1X1:Y/D
	1088 0037 81	1	CONNECTOR	(05/02/2020 - ...)	2X27
	1088 0037 80	1	CONNECTOR	(05/02/2020 - ...)	2X28
	1088 0031 32	1	CONNECTOR	(05/02/2020 - ...)	2X30
	1088 0031 26	1	CONNECTOR 6-POLE	(05/02/2020 - ...)	2X31
	~~1089 9664 06~~	1	SWITCH	(05/02/2020 - ...)	Q15
	Substituted by:	1089 9551 97 - AUX.CONTACT CIRCUIT BREAKER (quantity: 1)			
	1089 9551 19	1	CIRCUIT BREAKER	(05/02/2020 - ...)	Q15
	1088 0038 26	1	TERMINAL	(05/02/2020 - ...)	1X1:Y/D
	1089 9602 79	1	CONTACTOR 110 V	(05/02/2020 - ...)	K15
	1089 9461 26	1	PHASE SEQUENCE RELAY	(05/02/2020 - ...)	K25
	1088 0032 17	1	RELAY 115 VAC	(05/02/2020 - ...)	K5
	0991 8011 21	AR	CABLE TRAY	(05/02/2020 - ...)	L=1384mm
	0697 9811 16	1	PLUG	(05/02/2020 - ...)	
	Electrical legend:	Plug for Dryer			
	0989 3700 47	1	LOCKNUT	(05/02/2020 - ...)	
	Electrical legend:	Locknut for dryer			
	0697 9811 11	2	PLUG	(05/02/2020 - ...)	
	Electrical legend:	Plug for FF Drain/LAT			
	0989 3700 42	2	NUT	(05/02/2020 - ...)	
	Electrical legend:	Locknut for FF Drain/LAT			
	1088 0031 13	1	CONNECTOR 13-POLE	(05/02/2020 - ...)	1X30
	1088 0037 82	1	CONNECTOR	(05/02/2020 - ...)	3X34
	0697 9811 13	1	PLUG	(05/02/2020 - ...)	
	Electrical legend:	Energy recovery			
	0989 3700 44	1	LOCKNUT	(05/02/2020 - ...)	
	Electrical legend:	Energy recovery			
	0697 9811 12	1	PLUG	(05/02/2020 - ...)	
	Electrical legend:	Control circuit of T10			
	0989 3700 43	1	NUT	(05/02/2020 - ...)	
	Electrical legend:	Control circuit of T10			
	0697 9811 10	1	PLUG	(05/02/2020 - ...)	
	Electrical legend:	Plug for smartbox hole			

Legend:

FREQ:50HZ - Frequency:50 Hz
FREQ:60HZ - Frequency:60 Hz
IDRY:N - Integrated dryer:No
MODEL:GA110VP_16 - Model:GA 110VSD+
MOVOL:200V - Supply voltage:200 V
MOVOL:230V - Supply voltage:230 V
MOVOL:380V - Supply voltage:380 V
MOVOL:400V - Supply voltage:400 V
MOVOL:460V - Supply voltage:460 V
MOVOL:500V - Supply voltage:500 V
MOVOL:575V - Supply voltage:575 V

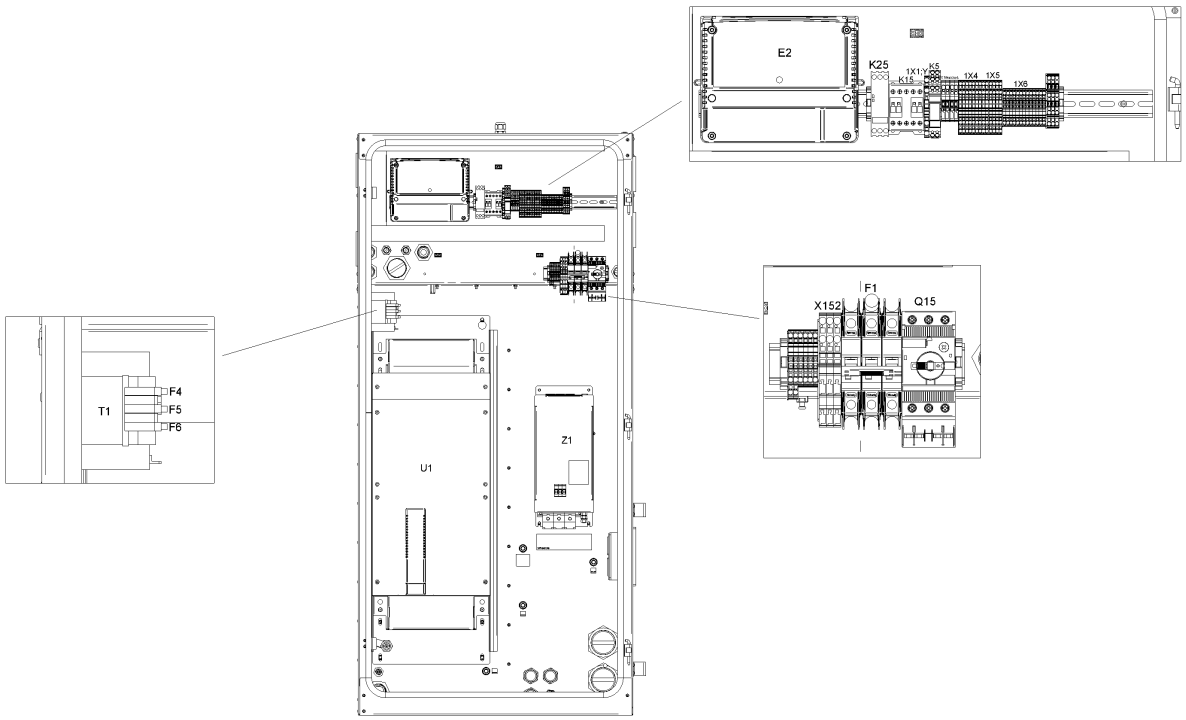
E2
K25
K5
K15
1X1
1X4
1X5
1X6
F1
X152
Q15
T1
F4
F5
F6
U1
Z1

26.27 - IT Ancillaries GA 110 VSD+ - 200V-400V-500V/50Hz, 200V-230V-380V-460V-575V/60Hz - Pack (05/02/2020 - ...)

((MOVOL:200V , MOVOL:230V , MOVOL:380V , MOVOL:460V , MOVOL:575V) + FREQ:60HZ , (MOVOL:200V , MOVOL:400V , MOVOL:500V) + FREQ:50HZ) + IDRY:N + MODEL:GA110VP_16

Ref	Part Number	Qty	Name	Validity	EL
	0989 3700 41	1	LOCKNUT	(05/02/2020 - ...)	
	Electrical legend:	Nut for smartbox hole			
	1089 9556 37	1	AIR INLET WITH FILTER	(05/02/2020 - ...)	Fan Filter

Legend:

FREQ:50HZ - Frequency:50 Hz
FREQ:60HZ - Frequency:60 Hz
IDRY:N - Integrated dryer:No
MODEL:GA110VP_16 - Model:GA 110VSD+
MOVOL:200V - Supply voltage:200 V
MOVOL:230V - Supply voltage:230 V
MOVOL:380V - Supply voltage:380 V
MOVOL:400V - Supply voltage:400 V
MOVOL:460V - Supply voltage:460 V
MOVOL:500V - Supply voltage:500 V
MOVOL:575V - Supply voltage:575 V

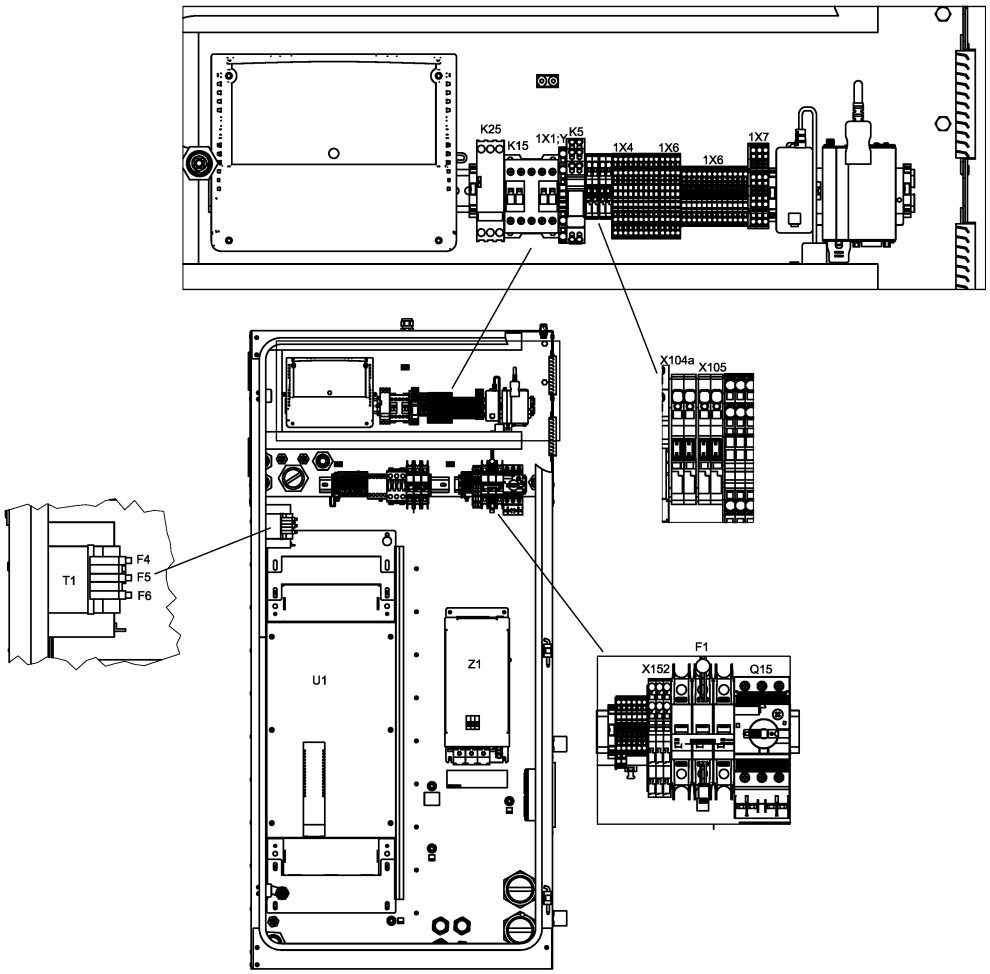
K25
K15
1X1:Y
K5
1X4
1X6
1X6
1X7
X104a
X105
T1
F4
F5
F6
U1
Z1
F1
X152
Q15

26.28 - IT Ancillaries GA 75L VSD+ - 200V-400V-500V/50Hz, 230V-460V-575V/60Hz - Full-Feature (17/10/2017 - 11/12/2018)

((MOVOL:200V , MOVOL:400V , MOVOL:500V) + FREQ:50HZ , (MOVOL:230V , MOVOL:460V , MOVOL:575V) + FREQ:60HZ) + IDRY:Y + MODEL:GA75VP_16

Ref	Part Number	Qty	Name	Validity	EL
	1900 2202 06	1	CUBICLE	(17/10/2017 - 11/12/2018)	
	9820 3000 21	1	CUBICLE LAYOUT	(17/10/2017 - 11/12/2018)	-
	9820 3000 22	1	SERVICE DIAGRAM	(17/10/2017 - 11/12/2018)	-
	1622 3798 70	1	WIRE HARNESS COMM CABLE	(17/10/2017 - 11/12/2018)	-
	1622 5099 04	1	DI CHANE CABLE (1400MM)	(17/10/2017 - 11/12/2018)	
	Electrical legend:	Comm Cable Loose supply			
	1649 8001 22	1	CUBICLE	(17/10/2017 - 11/12/2018)	-
•	1202 6584 02	AR	SEAL		-
	1649 8001 32	1	PLATE NEOS "D"	(17/10/2017 - 11/12/2018)	-
	1649 8003 85	1	MOUNTING PLATE	(17/10/2017 - 11/12/2018)	-
	1649 8002 39	1	WIRE HARNESS	(17/10/2017 - 11/12/2018)	-
	1649 8002 40	1	WIRE HARNESS	(17/10/2017 - 11/12/2018)	-
	1649 8002 72	1	CABLE POWER	(17/10/2017 - 11/12/2018)	
	Electrical legend:	Full feature (FF) Drain			
	1649 8002 73	1	WIRE HARNESS	(17/10/2017 - 11/12/2018)	
	Electrical legend:	Pack Drain + Air filter switch			
	1649 8002 75	1	WIRE HARNESS	(17/10/2017 - 11/12/2018)	
	Electrical legend:	Relative Humidity sensor			
	1649 8001 45	3	MOTOR CABLE	(17/10/2017 - 11/12/2018)	-
	1649 8001 48	1	MOTOR CABLE	(17/10/2017 - 11/12/2018)	-
		1	DATA LABEL	(02/02/2018 - 11/12/2018)	-
		1	DATA LABEL	(17/10/2017 - 01/02/2018)	-
	1079 9901 68	1	WARNING LABEL	(17/10/2017 - 11/12/2018)	-
	1900 5350 95	1	INVERTER	(17/10/2017 - 11/12/2018)	U1
	1631 2079 00	1	NANOPERMRING	(17/10/2017 - 11/12/2018)	-
	0697 9811 17	2	PLUG	(17/10/2017 - 11/12/2018)	
	Electrical legend:	Plug for transfo supply			
	0989 3700 48	2	NUT	(17/10/2017 - 11/12/2018)	
	Electrical legend:	Nut for transfo supply			
	0698 5140 72	1	CABLE GLAND	(17/10/2017 - 11/12/2018)	Fan
	0698 5140 71	1	CABLE GLAND	(17/10/2017 - 11/12/2018)	
	Electrical legend:	Ambient sensor			
	0697 9809 20	1	LOCKNUT	(17/10/2017 - 11/12/2018)	
	Electrical legend:	Ambient sensor			
	1089 9556 44	1	FAN WITH FILTER	(17/10/2017 - 11/12/2018)	Cubicle fan
		4	AIR INLET W/O FILTER	(17/10/2017 - 11/12/2018)	-
	Service kits:	2901 9901 01 - PREVENTIVE MAINTENANCE KIT - GA 75L VSD+			
	1088 0032 09	1	CONNECTOR	(17/10/2017 - 11/12/2018)	X3
	1089 9572 05	1	LINE FILTER	(17/10/2017 - 11/12/2018)	Z1 for 75 kw
	Electrical legend:	Z1 for 75 kw			
	1089 9562 04	1	STRAP	(17/10/2017 - 11/12/2018)	HF-screen
	1089 9514 56	1	TRANSFORMER	(17/10/2017 - 11/12/2018)	T1
	1089 9522 26	1	CIRCUIT BREAKER	(17/10/2017 - 11/12/2018)	F1
	1089 9513 41	1	PUSH BUTTON	(17/10/2017 - 11/12/2018)	S3
	1089 9513 28	1	HOLDER	(17/10/2017 - 11/12/2018)	S3
	~~1089 9513 30~~	4	CONTACTOR	(17/10/2017 - 11/12/2018)	S3
	Substituted by:	1089 9513 04 - CONTACT BLOCK (quantity: 1)			
	1088 0031 02	1	CONNECTOR 2-POLE	(17/10/2017 - 11/12/2018)	
	Electrical legend:	X153 (Smartbox)			
	1088 0039 07	3	TERMINAL	(17/10/2017 - 11/12/2018)	X152
	1088 0039 05	1	PLATE	(17/10/2017 - 11/12/2018)	X152
	1088 0039 26	1	CONNECTOR	(17/10/2017 - 11/12/2018)	
	Electrical legend:	X152 (remove coding pin 1,3)			

Legend:

FREQ:50HZ - Frequency:50 Hz
FREQ:60HZ - Frequency:60 Hz
IDRY:Y - Integrated dryer:Yes
MODEL:GA75VP_16 - Model:GA 75VSD+
MOVOL:200V - Supply voltage:200 V
MOVOL:230V - Supply voltage:230 V
MOVOL:400V - Supply voltage:400 V
MOVOL:460V - Supply voltage:460 V
MOVOL:500V - Supply voltage:500 V
MOVOL:575V - Supply voltage:575 V

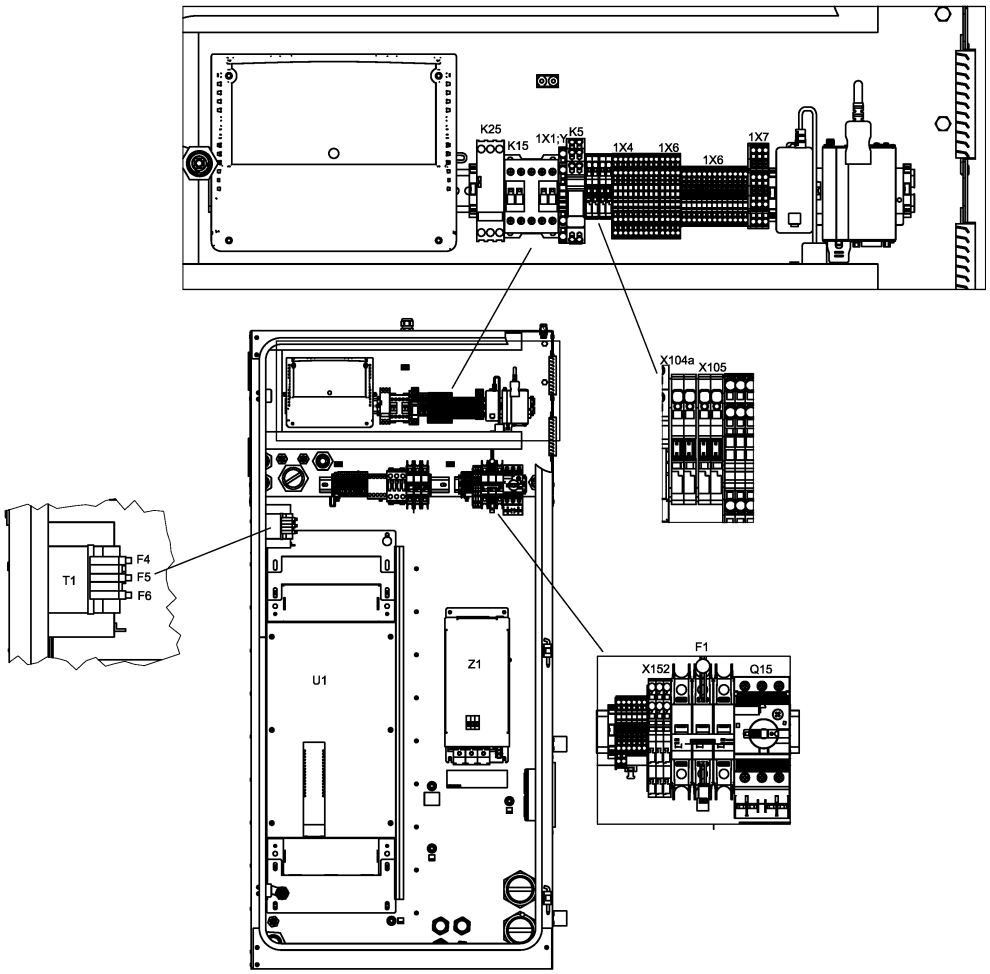
K25
K15
1X1:Y
K5
1X4
1X6
1X6
1X7
X104a
X105
T1
F4
F5
F6
U1
Z1
F1
X152
Q15

Ref	Part Number	Qty	Name	Validity	EL
	1088 0037 99	4	PIN	(17/10/2017 - 11/12/2018)	X152:1; 3
	~~1088 0031 81~~	7	END STOP BRACKET 6MM	(17/10/2017 - 11/12/2018)	
	Electrical legend:	Connector/terminal rail			
	Substituted by:	1089 0577 82 - END RETAINER (quantity: 1)			
	1088 0039 38	2	TERMINAL	(17/10/2017 - 11/12/2018)	1X11:2,5
	1088 0039 40	1	PLATE	(17/10/2017 - 11/12/2018)	1X11
	1088 0039 34	4	TERMINAL	(17/10/2017 - 11/12/2018)	
	Electrical legend:	1X11:30,301,34			
	1088 0039 35	1	PLATE	(17/10/2017 - 11/12/2018)	1X11
	1088 0039 04	2	TERMINAL	(17/10/2017 - 11/12/2018)	X104a
	1088 0037 99	2	PIN	(17/10/2017 - 11/12/2018)	X104a/X105
	1088 0039 02	1	PLATE	(17/10/2017 - 11/12/2018)	X104a
	1088 0039 04	2	TERMINAL	(17/10/2017 - 11/12/2018)	
	1088 0039 02	1	PLATE	(17/10/2017 - 11/12/2018)	
	1088 0039 34	13	TERMINAL	(17/10/2017 - 11/12/2018)	1X6
	1088 0037 69	3	CONNECTOR	(17/10/2017 - 11/12/2018)	1X7
	1088 0039 35	1	PLATE	(17/10/2017 - 11/12/2018)	1X6
	1088 0040 37	1	END PLATE	(17/10/2017 - 11/12/2018)	1X7
	1088 0039 36	9	TERMINAL	(17/10/2017 - 11/12/2018)	1X4
	1088 0039 36	4	TERMINAL	(17/10/2017 - 11/12/2018)	1X6
	1088 0039 37	1	END PLATE	(17/10/2017 - 11/12/2018)	1X4
	1088 0039 37	1	END PLATE	(17/10/2017 - 11/12/2018)	1X6
	1088 0039 37	1	END PLATE	(17/10/2017 - 11/12/2018)	1X1:Y/D
	1088 0037 81	1	CONNECTOR	(17/10/2017 - 11/12/2018)	2X27
	1088 0037 80	1	CONNECTOR	(17/10/2017 - 11/12/2018)	2X28
	1088 0031 32	1	CONNECTOR	(17/10/2017 - 11/12/2018)	2X30
	1088 0031 26	1	CONNECTOR 6-POLE	(17/10/2017 - 11/12/2018)	2X31
	~~1089 9664 06~~	1	SWITCH	(17/10/2017 - 11/12/2018)	Q15
	Substituted by:	1089 9551 97 - AUX.CONTACT CIRCUIT BREAKER (quantity: 1)			
	1089 9551 18	1	CIRCUIT BREAKER	(17/10/2017 - 11/12/2018)	Q15
	1088 0038 26	1	TERMINAL	(17/10/2017 - 11/12/2018)	1X1:Y/D
	1089 9602 79	1	CONTACTOR 110 V	(17/10/2017 - 11/12/2018)	K15
	1089 9461 26	1	PHASE SEQUENCE RELAY	(17/10/2017 - 11/12/2018)	K25
	1088 0032 17	1	RELAY 115 VAC	(17/10/2017 - 11/12/2018)	K5
	0991 8011 21	AR	CABLE TRAY	(17/10/2017 - 11/12/2018)	L=1384mm
	1900 2203 02	1	DRYER RAIL	(17/10/2017 - 11/12/2018)	
	Electrical legend:	Without trafo on dryer			
	1088 0031 13	1	CONNECTOR 13-POLE	(17/10/2017 - 11/12/2018)	1X30
	1088 0037 82	1	CONNECTOR	(17/10/2017 - 11/12/2018)	3X34
	0697 9811 13	1	PLUG	(17/10/2017 - 11/12/2018)	
	Electrical legend:	Energy recovery			
	0989 3700 44	1	LOCKNUT	(17/10/2017 - 11/12/2018)	
	Electrical legend:	Energy recovery			
	0697 9811 12	1	PLUG	(17/10/2017 - 11/12/2018)	
	Electrical legend:	Control circuit of T10			
	0989 3700 43	1	NUT	(17/10/2017 - 11/12/2018)	
	Electrical legend:	Control circuit of T10			

Legend:

FREQ:50HZ - Frequency:50 Hz
FREQ:60HZ - Frequency:60 Hz
IDRY:Y - Integrated dryer:Yes
MODEL:GA75VP_16 - Model:GA 75VSD+
MOVOL:200V - Supply voltage:200 V
MOVOL:230V - Supply voltage:230 V
MOVOL:400V - Supply voltage:400 V
MOVOL:460V - Supply voltage:460 V
MOVOL:500V - Supply voltage:500 V
MOVOL:575V - Supply voltage:575 V

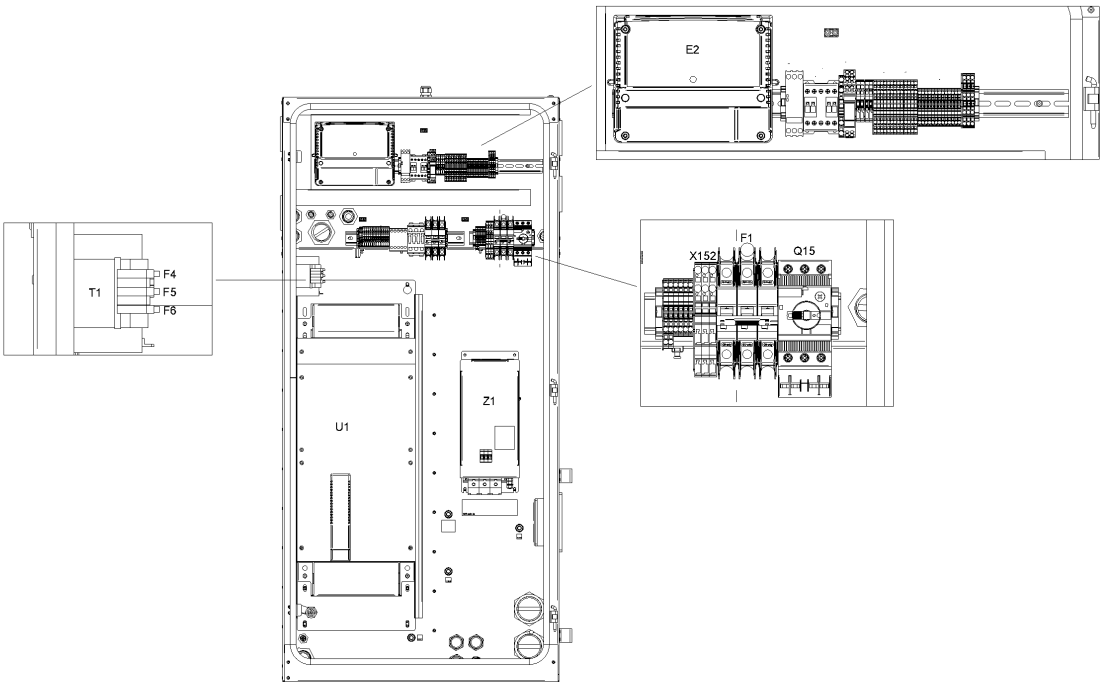
E2
T1
F4
F5
F6
X152
F1
Q15
U1
Z1

26.29 - IT Ancillaries GA 75L VSD+ - 200V-400V-500V/50Hz, 230V-460V-575V/60Hz - Full-Feature (12/12/2018 - 27/11/2019)

((MOVOL:200V , MOVOL:400V , MOVOL:500V) + FREQ:50HZ , (MOVOL:230V , MOVOL:460V , MOVOL:575V) + FREQ:60HZ) + IDRY:Y + MODEL:GA75VP_16

Ref	Part Number	Qty	Name	Validity	EL
	1900 2202 25	1	CUBICLE	(12/12/2018 - 27/11/2019)	
	9820 3000 31	1	ASSEMBLY DRAWING	(12/12/2018 - 27/11/2019)	AD
	9820 3000 27	1	SERVICE DIAGRAM	(12/12/2018 - 27/11/2019)	SD
	1622 3798 72	1	WIRE HARNESS	(12/12/2018 - 27/11/2019)	Comm Cable
	1622 5099 04	1	DI CHANE CABLE (1400MM)	(12/12/2018 - 27/11/2019)	
	Electrical legend:	Comm Cable Loose supply			
	1649 8001 22	1	CUBICLE	(12/12/2018 - 27/11/2019)	MSA
	1649 8001 32	1	PLATE NEOS "D"	(12/12/2018 - 27/11/2019)	
	Electrical legend:	Mounting plate			
	1649 8003 85	1	MOUNTING PLATE	(12/12/2018 - 27/11/2019)	
	Electrical legend:	Mounting plate			
	1649 8002 39	1	WIRE HARNESS	(12/12/2018 - 27/11/2019)	WH
	1649 8002 40	1	WIRE HARNESS	(12/12/2018 - 27/11/2019)	WH
	1649 8002 72	1	CABLE POWER	(12/12/2018 - 27/11/2019)	
	Electrical legend:	Full feature (FF) Drain			
	1649 8002 73	1	WIRE HARNESS	(12/12/2018 - 27/11/2019)	
	Electrical legend:	Pack Drain + Air filter switch			
	1649 8002 75	1	WIRE HARNESS	(12/12/2018 - 27/11/2019)	
	Electrical legend:	Relative Humidity sensor			
	1649 8001 45	3	MOTOR CABLE	(12/12/2018 - 27/11/2019)	
	Electrical legend:	Motor conduit			
	1649 8001 48	1	MOTOR CABLE	(12/12/2018 - 27/11/2019)	
	Electrical legend:	Motor conduit			
		1	DATALABEL	(12/12/2018 - 27/11/2019)	Label
	1079 9901 68	1	WARNING LABEL	(12/12/2018 - 27/11/2019)	Label
	1649 8005 00	-	LABEL	(12/12/2018 - 27/11/2019)	Label
	1900 5350 95	1	INVERTER	(12/12/2018 - 27/11/2019)	U1
	1631 2079 00	1	NANOPERMRING	(12/12/2018 - 27/11/2019)	
	Electrical legend:	Nanoperm ring			
	0697 9811 17	2	PLUG	(12/12/2018 - 27/11/2019)	
	Electrical legend:	Plug for transfo supply			
	0989 3700 48	2	NUT	(12/12/2018 - 27/11/2019)	
	Electrical legend:	Nut for transfo supply			
	0698 5140 72	1	CABLE GLAND	(12/12/2018 - 27/11/2019)	Fan
	0698 5140 71	1	CABLE GLAND	(12/12/2018 - 27/11/2019)	
	Electrical legend:	Ambient sensor			
	0697 9809 20	1	LOCKNUT	(12/12/2018 - 27/11/2019)	
	Electrical legend:	Ambient sensor			
	1089 9556 44	1	FAN WITH FILTER	(12/12/2018 - 27/11/2019)	Cubicle fan
	1089 9556 72	4	AIR INLET WITHOUT FILTER	(12/12/2018 - 27/11/2019)	Filter grid
	1088 0032 09	1	CONNECTOR	(12/12/2018 - 27/11/2019)	X3
	1089 9572 05	1	LINE FILTER	(12/12/2018 - 27/11/2019)	Z1 for 75 kw
	Electrical legend:	Z1 for 75 kw			
	1089 9562 04	1	STRAP	(12/12/2018 - 27/11/2019)	HF-screen
	1089 9514 56	1	TRANSFORMER	(12/12/2018 - 27/11/2019)	T1
	1089 9522 26	1	CIRCUIT BREAKER	(12/12/2018 - 27/11/2019)	F1
	1089 9513 41	1	PUSH BUTTON	(12/12/2018 - 27/11/2019)	S3
	1089 9513 28	1	HOLDER	(12/12/2018 - 27/11/2019)	S3
	~~1089 9513 30~~	4	CONTACTOR	(12/12/2018 - 27/11/2019)	S3
	Substituted by:	1089 9513 04 - CONTACT BLOCK (quantity: 1)			
	1088 0031 02	1	CONNECTOR 2-POLE	(12/12/2018 - 17/02/2019)	
	1088 0039 07	3	TERMINAL	(12/12/2018 - 27/11/2019)	X152
	1088 0039 05	1	PLATE	(12/12/2018 - 27/11/2019)	X152
	1088 0039 26	1	CONNECTOR	(12/12/2018 - 27/11/2019)	

Legend:

FREQ:50HZ - Frequency:50 Hz
FREQ:60HZ - Frequency:60 Hz
IDRY:Y - Integrated dryer:Yes
MODEL:GA75VP_16 - Model:GA 75VSD+
MOVOL:200V - Supply voltage:200 V
MOVOL:230V - Supply voltage:230 V
MOVOL:400V - Supply voltage:400 V
MOVOL:460V - Supply voltage:460 V
MOVOL:500V - Supply voltage:500 V
MOVOL:575V - Supply voltage:575 V

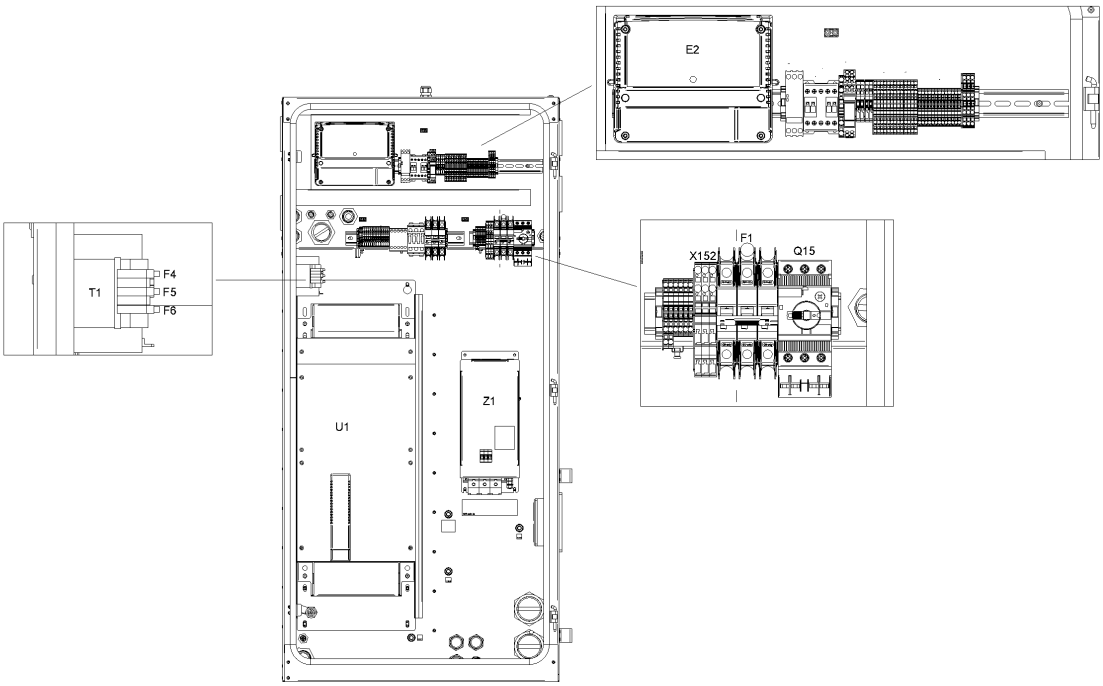
E2
T1
F4
F5
F6
X152
F1
Q15
U1
Z1

Ref	Part Number	Qty	Name	Validity	EL
	Electrical legend:	X152 (remove coding pin 1,3)			
	1088 0037 99	4	PIN	(12/12/2018 - 27/11/2019)	X152:1; 3
	~~1088 0031 81~~	7	END STOP BRACKET 6MM	(12/12/2018 - 27/11/2019)	
	Electrical legend:	Connector/terminal rail			
	Substituted by:	1089 0577 82 - END RETAINER (quantity: 1)			
	1088 0039 38	2	TERMINAL	(12/12/2018 - 27/11/2019)	1X11:2,5
	1088 0039 40	1	PLATE	(12/12/2018 - 27/11/2019)	1X11
	1088 0039 34	4	TERMINAL	(12/12/2018 - 27/11/2019)	
	Electrical legend:	1X11:30,301,34			
	1088 0039 35	1	PLATE	(12/12/2018 - 27/11/2019)	1X11
	1088 0039 04	2	TERMINAL	(12/12/2018 - 27/11/2019)	X104a
	1088 0037 99	2	PIN	(12/12/2018 - 27/11/2019)	X104a/X105
	1088 0039 02	1	PLATE	(12/12/2018 - 27/11/2019)	X104a
	1088 0039 07	2	TERMINAL	(12/12/2018 - 27/11/2019)	X105
	1088 0039 05	1	PLATE	(12/12/2018 - 27/11/2019)	X105
	1088 0039 34	13	TERMINAL	(12/12/2018 - 27/11/2019)	1X6
	1088 0037 69	3	CONNECTOR	(12/12/2018 - 27/11/2019)	1X7
	1088 0039 35	1	PLATE	(12/12/2018 - 27/11/2019)	1X6
	1088 0040 37	1	END PLATE	(12/12/2018 - 27/11/2019)	1X7
	1088 0039 36	9	TERMINAL	(12/12/2018 - 27/11/2019)	1X4
	1088 0039 36	4	TERMINAL	(12/12/2018 - 27/11/2019)	1X6
	1088 0039 37	1	END PLATE	(12/12/2018 - 27/11/2019)	1X4
	1088 0039 37	1	END PLATE	(12/12/2018 - 27/11/2019)	1X6
	1088 0039 37	1	END PLATE	(12/12/2018 - 27/11/2019)	1X1:Y/D
	1088 0037 81	1	CONNECTOR	(12/12/2018 - 27/11/2019)	2X27
	1088 0037 80	1	CONNECTOR	(12/12/2018 - 27/11/2019)	2X28
	1088 0031 32	1	CONNECTOR	(12/12/2018 - 27/11/2019)	2X30
	1088 0031 26	1	CONNECTOR 6-POLE	(12/12/2018 - 27/11/2019)	2X31
	~~1089 9664 06~~	1	SWITCH	(12/12/2018 - 27/11/2019)	Q15
	Substituted by:	1089 9551 97 - AUX.CONTACT CIRCUIT BREAKER (quantity: 1)			
	1089 9551 18	1	CIRCUIT BREAK.	(12/12/2018 - 27/11/2019)	Q15
	1088 0038 26	1	TERMINAL	(12/12/2018 - 27/11/2019)	1X1:Y/D
	1089 9602 79	1	CONTACTOR 110 V	(12/12/2018 - 27/11/2019)	K15
	1089 9461 26	1	PHASE SEQUENCE RELAY	(12/12/2018 - 27/11/2019)	K25
	1088 0032 17	1	RELAY 115 VAC	(12/12/2018 - 27/11/2019)	K5
	0991 8011 21	AR	CABLE TRAY	(12/12/2018 - 27/11/2019)	L=1384mm
	1900 2203 02	1	DRYER RAIL	(12/12/2018 - 27/11/2019)	
	Electrical legend:	Without trafo on dryer			
	1088 0031 13	1	CONNECTOR 13-POLE	(12/12/2018 - 27/11/2019)	1X30
	1088 0037 82	1	CONNECTOR	(12/12/2018 - 27/11/2019)	3X34
	0697 9811 13	1	PLUG	(12/12/2018 - 27/11/2019)	
	Electrical legend:	Energy recovery			
	0989 3700 44	1	LOCKNUT	(12/12/2018 - 27/11/2019)	
	Electrical legend:	Energy recovery			
	0697 9811 12	1	PLUG	(12/12/2018 - 27/11/2019)	
	Electrical legend:	Control circuit of T10			
	0989 3700 43	1	NUT	(12/12/2018 - 27/11/2019)	
	Electrical legend:	Control circuit of T10			
	0697 9811 10	1	PLUG	(12/12/2018 - 27/11/2019)	
	Electrical legend:	Plug for smartbox hole			
	0989 3700 41	1	LOCKNUT	(12/12/2018 - 27/11/2019)	
	Electrical legend:	Nut for smartbox hole			

Legend:

FREQ:50HZ - Frequency:50 Hz
MODEL:GA75VP_16 - Model:GA 75VSD+
MOVOL:400V - Supply voltage:400 V
MOVOL:575V - Supply voltage:575 V
FREQ:60HZ - Frequency:60 Hz
MOVOL:200V - Supply voltage:200 V
MOVOL:460V - Supply voltage:460 V
IDRY:Y - Integrated dryer:Yes
MOVOL:230V - Supply voltage:230 V
MOVOL:500V - Supply voltage:500 V

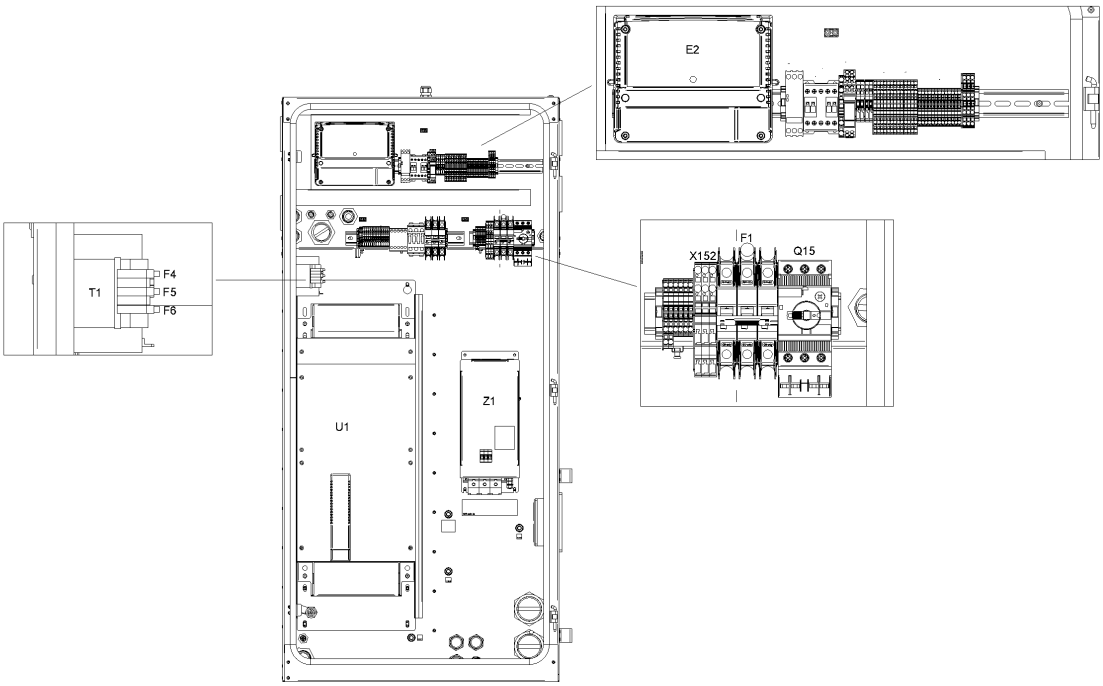
E2
T1
F4
F5
F6
X152
F1
Q15
U1
Z1

26.30 - IT Ancillaries GA 75L VSD+ - 200V-400V-500V/50Hz, 230V-460V-575V/60Hz - Full-Feature (28/11/2019 - ...)

((MOVOL:200V , MOVOL:400V , MOVOL:500V) + FREQ:50HZ , (MOVOL:230V , MOVOL:460V , MOVOL:575V) + FREQ:60HZ) + IDRY:Y + MODEL:GA75VP_16

Ref	Part Number	Qty	Name	Validity	EL
	1900 2202 45	1	CUBICLE	(28/11/2019 - ...)	
	9820 3000 31	1	ASSEMBLY DRAWING	(28/11/2019 - ...)	AD
	9820 3000 27	1	SERVICE DIAGRAM	(28/11/2019 - ...)	SD
	1622 3798 72	1	WIRE HARNESS	(28/11/2019 - ...)	Comm Cable
	1622 5099 04	1	DI CHANE CABLE (1400MM)	(28/11/2019 - ...)	
	Electrical legend:	Comm Cable Loose supply			
	1649 8006 00	1	CUBICLE	(28/11/2019 - ...)	MSA
	1649 8001 32	1	PLATE NEOS "D"	(28/11/2019 - ...)	
	Electrical legend:	Mounting plate			
	1649 8003 85	1	MOUNTING PLATE	(28/11/2019 - ...)	
	Electrical legend:	Mounting plate			
	1649 8002 39	1	WIRE HARNESS	(28/11/2019 - ...)	WH
	1649 8002 40	1	WIRE HARNESS	(28/11/2019 - ...)	WH
	1649 8002 72	1	CABLE POWER	(28/11/2019 - ...)	
	Electrical legend:	Full feature (FF) Drain			
	1649 8002 73	1	WIRE HARNESS	(28/11/2019 - ...)	
	Electrical legend:	Pack Drain + Air filter switch			
	1649 8002 75	1	WIRE HARNESS	(28/11/2019 - ...)	
	Electrical legend:	Relative Humidity sensor			
	1649 8001 45	3	MOTOR CABLE	(28/11/2019 - ...)	
	Electrical legend:	Motor conduit			
	1649 8001 48	1	MOTOR CABLE	(28/11/2019 - ...)	
	Electrical legend:	Motor conduit			
	1625 3906 31	1	DATA LABEL	(28/11/2019 - ...)	Label
	1079 9901 68	1	WARNING LABEL	(28/11/2019 - ...)	Label
	1649 8005 00	0	LABEL	(28/11/2019 - ...)	Label
	1900 5350 95	1	INVERTER	(28/11/2019 - ...)	U1
	1631 2079 00	1	NANOPERMRING	(28/11/2019 - ...)	
	Electrical legend:	Nanoperm ring			
	0697 9811 17	2	PLUG	(28/11/2019 - ...)	
	Electrical legend:	Plug for transfo supply			
	0989 3700 48	2	NUT	(28/11/2019 - ...)	
	Electrical legend:	Nut for transfo supply			
	0698 5140 72	1	CABLE GLAND	(28/11/2019 - ...)	Fan
	0698 5140 71	1	CABLE GLAND	(28/11/2019 - ...)	
	Electrical legend:	Ambient sensor			
	0697 9809 20	1	LOCKNUT	(28/11/2019 - ...)	
	Electrical legend:	Ambient sensor			
	1089 9556 44	1	FAN WITH FILTER	(28/11/2019 - ...)	Cubicle fan
	1089 9556 72	4	AIR INLET WITHOUT FILTER	(28/11/2019 - ...)	Filter grid
	1088 0032 09	1	CONNECTOR	(28/11/2019 - ...)	X3
	1089 9572 05	1	LINE FILTER	(28/11/2019 - ...)	Z1 for 75 kw
	Electrical legend:	Z1 for 75 kw			
	1089 9562 04	1	STRAP	(28/11/2019 - ...)	HF-screen
	1089 9514 56	1	TRANSFORMER	(28/11/2019 - ...)	T1
	1089 9522 26	1	CIRCUIT BREAKER	(28/11/2019 - ...)	F1
	1089 9513 41	1	PUSH BUTTON	(28/11/2019 - ...)	S3
	1089 9513 28	1	HOLDER	(28/11/2019 - ...)	S3
	~~1089 9513 30~~	4	CONTACTOR	(28/11/2019 - ...)	S3
	Substituted by:	1089 9513 04 - CONTACT BLOCK (quantity: 1)			
	1088 0039 07	3	TERMINAL	(28/11/2019 - ...)	X152
	1088 0039 05	1	PLATE	(28/11/2019 - ...)	X152
	1088 0039 26	1	CONNECTOR	(28/11/2019 - ...)	
	Electrical legend:	X152 (remove coding pin 1,3)			

Legend:

FREQ:50HZ - Frequency:50 Hz
FREQ:60HZ - Frequency:60 Hz
IDRY:Y - Integrated dryer:Yes
MODEL:GA75VP_16 - Model:GA 75VSD+
MOVOL:200V - Supply voltage:200 V
MOVOL:230V - Supply voltage:230 V
MOVOL:400V - Supply voltage:400 V
MOVOL:460V - Supply voltage:460 V
MOVOL:500V - Supply voltage:500 V
MOVOL:575V - Supply voltage:575 V

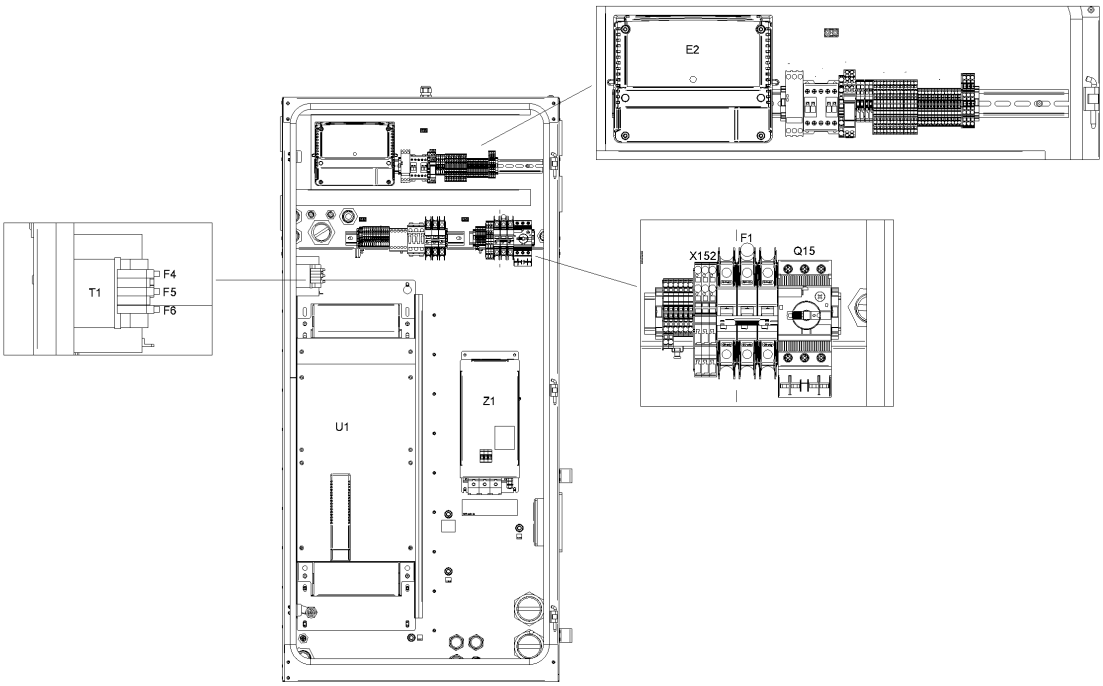
E2
T1
F4
F5
F6
X152
F1
Q15
U1
Z1

Ref	Part Number	Qty	Name	Validity	EL
	1088 0037 99	4	PIN	(28/11/2019 - ...)	X152:1; 3
	~~1088 0031 81~~	7	END STOP BRACKET 6MM	(28/11/2019 - ...)	
	Electrical legend:	Connector/terminal rail			
	Substituted by:	1089 0577 82 - END RETAINER (quantity: 1)			
	1088 0039 38	2	TERMINAL	(28/11/2019 - ...)	1X11:2,5
	1088 0039 40	1	PLATE	(28/11/2019 - ...)	1X11
	1088 0039 34	4	TERMINAL	(28/11/2019 - ...)	
	Electrical legend:	1X11:30,301,34			
	1088 0039 35	1	PLATE	(28/11/2019 - ...)	1X11
	1088 0039 04	2	TERMINAL	(28/11/2019 - ...)	X104a
	1088 0037 99	2	PIN	(28/11/2019 - ...)	X104a/X105
	1088 0039 02	1	PLATE	(28/11/2019 - ...)	X104a
	1088 0039 07	2	TERMINAL	(28/11/2019 - ...)	X105
	1088 0039 05	1	PLATE	(28/11/2019 - ...)	X105
	1088 0039 34	13	TERMINAL	(28/11/2019 - ...)	1X6
	1088 0037 69	3	CONNECTOR	(28/11/2019 - ...)	1X7
	1088 0039 35	1	PLATE	(28/11/2019 - ...)	1X6
	1088 0040 37	1	END PLATE	(28/11/2019 - ...)	1X7
	1088 0039 36	9	TERMINAL	(28/11/2019 - ...)	1X4
	1088 0039 36	4	TERMINAL	(28/11/2019 - ...)	1X6
	1088 0039 37	1	END PLATE	(28/11/2019 - ...)	1X4
	1088 0039 37	1	END PLATE	(28/11/2019 - ...)	1X6
	1088 0039 37	1	END PLATE	(28/11/2019 - ...)	1X1:Y/D
	1088 0037 81	1	CONNECTOR	(28/11/2019 - ...)	2X27
	1088 0037 80	1	CONNECTOR	(28/11/2019 - ...)	2X28
	1088 0031 32	1	CONNECTOR	(28/11/2019 - ...)	2X30
	1088 0031 26	1	CONNECTOR 6-POLE	(28/11/2019 - ...)	2X31
	~~1089 9664 06~~	1	SWITCH	(28/11/2019 - ...)	Q15
	Substituted by:	1089 9551 97 - AUX.CONTACT CIRCUIT BREAKER (quantity: 1)			
	1089 9551 18	1	CIRCUIT BREAKER	(28/11/2019 - ...)	Q15
	1088 0038 26	1	TERMINAL	(28/11/2019 - ...)	1X1:Y/D
	1089 9602 79	1	CONTACTOR 110 V	(28/11/2019 - ...)	K15
	1089 9461 26	1	PHASE SEQUENCE RELAY	(28/11/2019 - ...)	K25
	1088 0032 17	1	RELAY 115 VAC	(28/11/2019 - ...)	K5
	0991 8011 21	AR	CABLE TRAY	(28/11/2019 - ...)	L=1384mm
	1900 2203 02	1	DRYER RAIL	(28/11/2019 - ...)	
	Electrical legend:	Without trafo on dryer			
	1088 0031 13	1	CONNECTOR 13-POLE	(28/11/2019 - ...)	1X30
	1088 0037 82	1	CONNECTOR	(28/11/2019 - ...)	3X34
	0697 9811 13	1	PLUG	(28/11/2019 - ...)	
	Electrical legend:	Energy recovery			
	0989 3700 44	1	LOCKNUT	(28/11/2019 - ...)	
	Electrical legend:	Energy recovery			
	0697 9811 12	1	PLUG	(28/11/2019 - ...)	
	Electrical legend:	Control circuit of T10			
	0989 3700 43	1	NUT	(28/11/2019 - ...)	
	Electrical legend:	Control circuit of T10			
	0697 9811 10	1	PLUG	(28/11/2019 - ...)	
	Electrical legend:	Plug for smartbox hole			
	0989 3700 41	1	LOCKNUT	(28/11/2019 - ...)	
	Electrical legend:	Nut for smartbox hole			
	1089 9556 37	1	AIR INLET WITH FILTER	(28/11/2019 - ...)	Fan Filter

Legend:

FREQ:50HZ - Frequency:50 Hz
FREQ:60HZ - Frequency:60 Hz
IDRY:Y - Integrated dryer:Yes
MODEL:GA75VP_16 - Model:GA 75VSD+
MOVOL:200V - Supply voltage:200 V
MOVOL:230V - Supply voltage:230 V
MOVOL:400V - Supply voltage:400 V
MOVOL:460V - Supply voltage:460 V
MOVOL:500V - Supply voltage:500 V
MOVOL:575V - Supply voltage:575 V

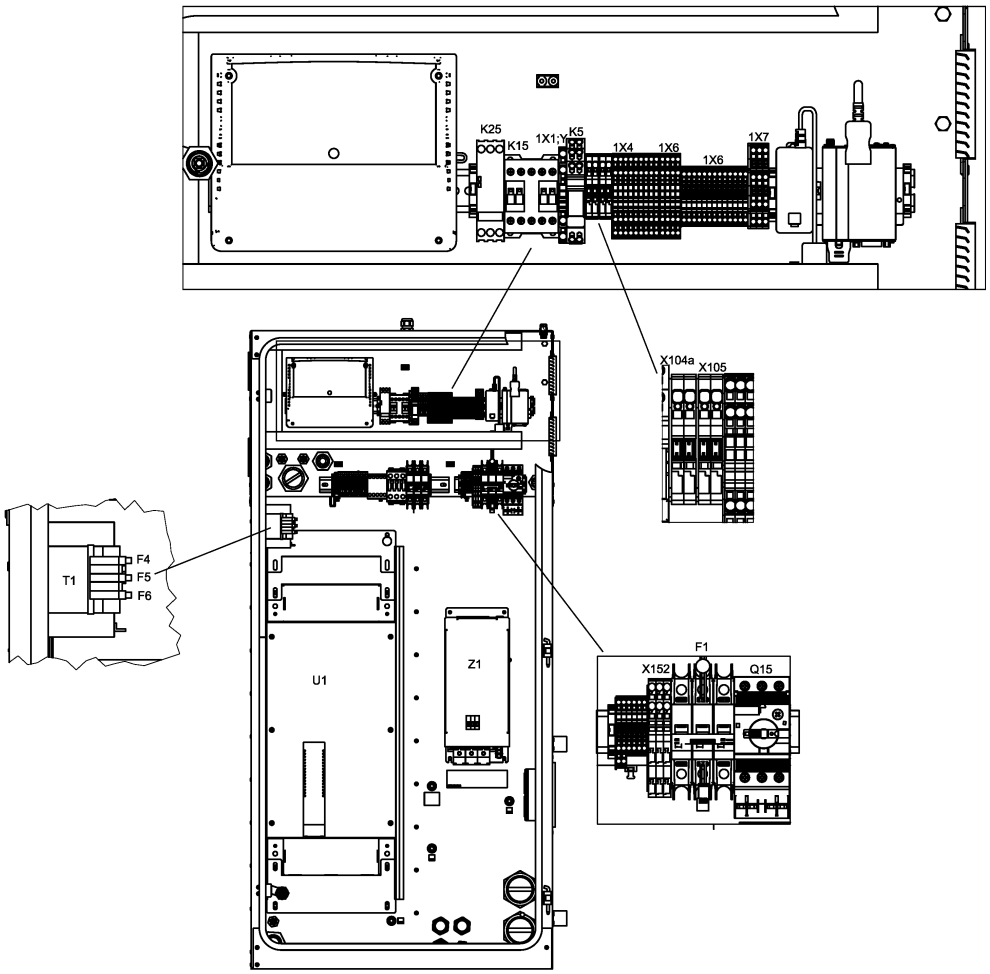
K25
K15
1X1:Y
K5
1X4
1X6
1X6
1X7
X104a
X105
T1
F4
F5
F6
U1
Z1
F1
X152
Q15

26.31 - IT Ancillaries GA 90 VSD+ - 200V-400V-500V/50Hz, 230V-460V-575V/60Hz - Full-Feature (17/10/2017 - 11/12/2018)

((MOVOL:200V , MOVOL:400V , MOVOL:500V) + FREQ:50HZ , (MOVOL:230V , MOVOL:460V , MOVOL:575V) + FREQ:60HZ) + IDRY:Y + MODEL:GA90VP_16

Ref	Part Number	Qty	Name	Validity	EL
	1900 2202 12	1	CUBICLE	(17/10/2017 - 11/12/2018)	
	9820 3000 21	1	CUBICLE LAYOUT	(17/10/2017 - 11/12/2018)	-
	9820 3000 22	1	SERVICE DIAGRAM	(17/10/2017 - 11/12/2018)	-
	1622 3798 70	1	WIRE HARNESS COMM CABLE	(17/10/2017 - 11/12/2018)	-
	1622 5099 04	1	DI CHANE CABLE (1400MM)	(17/10/2017 - 11/12/2018)	
	Electrical legend:	Comm Cable Loose supply			
	1649 8001 22	1	CUBICLE	(17/10/2017 - 11/12/2018)	-
•	1202 6584 02	AR	SEAL		-
	1649 8001 32	1	PLATE NEOS "D"	(17/10/2017 - 11/12/2018)	-
	1649 8003 85	1	MOUNTING PLATE	(17/10/2017 - 11/12/2018)	-
	1649 8002 39	1	WIRE HARNESS	(17/10/2017 - 11/12/2018)	-
	1649 8002 40	1	WIRE HARNESS	(17/10/2017 - 11/12/2018)	-
	1649 8002 72	1	CABLE POWER	(17/10/2017 - 11/12/2018)	
	Electrical legend:	Full feature (FF) Drain			
	1649 8002 73	1	WIRE HARNESS	(17/10/2017 - 11/12/2018)	
	Electrical legend:	Pack Drain + Air filter switch			
	1649 8002 75	1	WIRE HARNESS	(17/10/2017 - 11/12/2018)	
	Electrical legend:	Relative Humidity sensor			
	1649 8001 44	3	MOTOR CABLE	(17/10/2017 - 11/12/2018)	-
	1649 8001 47	1	MOTOR CABLE	(17/10/2017 - 11/12/2018)	-
		1	DATA LABEL	(02/02/2018 - 11/12/2018)	-
		1	DATA LABEL	(17/10/2017 - 01/02/2018)	-
	1079 9901 68	1	WARNING LABEL	(17/10/2017 - 11/12/2018)	-
	1900 5350 19	1	INVERTER	(17/10/2017 - 11/12/2018)	U1
	1631 2079 00	1	NANOPERMRING	(17/10/2017 - 11/12/2018)	-
	0697 9811 17	2	PLUG	(17/10/2017 - 11/12/2018)	
	Electrical legend:	Plug for transfo supply			
	0989 3700 48	2	NUT	(17/10/2017 - 11/12/2018)	
	Electrical legend:	Nut for transfo supply			
	0698 5140 72	1	CABLE GLAND	(17/10/2017 - 11/12/2018)	Fan
	0698 5140 71	1	CABLE GLAND	(17/10/2017 - 11/12/2018)	
	Electrical legend:	Ambient sensor			
	0697 9809 20	1	LOCKNUT	(17/10/2017 - 11/12/2018)	
	Electrical legend:	Ambient sensor			
	1089 9556 44	1	FAN WITH FILTER	(17/10/2017 - 11/12/2018)	Cubicle fan
		4	AIR INLET W/O FILTER	(17/10/2017 - 11/12/2018)	-
	Service kits:	2901 9901 02 - PREVENTIVE MAINTENANCE KIT - GA 90 VSD+, GA 110 VSD+ 2901 9900 96 - AIR FILTER KIT - GA 90 VSD+, GA 110 VSD+			
	1088 0032 09	1	CONNECTOR	(17/10/2017 - 11/12/2018)	X3
	1089 9572 06	1	LINE FILTER	(17/10/2017 - 11/12/2018)	Z1 for 90kw
	1089 9562 04	1	STRAP	(17/10/2017 - 11/12/2018)	HF-screen
	1089 9514 56	1	TRANSFORMER	(17/10/2017 - 11/12/2018)	T1
	1089 9522 26	1	CIRCUIT BREAKER	(17/10/2017 - 11/12/2018)	F1
	1089 9513 41	1	PUSH BUTTON	(17/10/2017 - 11/12/2018)	S3
	1089 9513 28	1	HOLDER	(17/10/2017 - 11/12/2018)	S3
	~~1089 9513 30~~	4	CONTACTOR	(17/10/2017 - 11/12/2018)	S3
	Substituted by:	1089 9513 04 - CONTACT BLOCK (quantity: 1)			
	1088 0031 02	1	CONNECTOR 2-POLE	(17/10/2017 - 11/12/2018)	
	Electrical legend:	X153 (Smartbox)			
	1088 0039 07	3	TERMINAL	(17/10/2017 - 11/12/2018)	X152
	1088 0039 05	1	PLATE	(17/10/2017 - 11/12/2018)	X152
	1088 0039 26	1	CONNECTOR	(17/10/2017 - 11/12/2018)	
	Electrical legend:	X152 (remove coding pin 1,3)			

Legend:

FREQ:50HZ - Frequency:50 Hz
FREQ:60HZ - Frequency:60 Hz
IDRY:Y - Integrated dryer:Yes
MODEL:GA90VP_16 - Model:GA 90VSD+
MOVOL:200V - Supply voltage:200 V
MOVOL:230V - Supply voltage:230 V
MOVOL:400V - Supply voltage:400 V
MOVOL:460V - Supply voltage:460 V
MOVOL:500V - Supply voltage:500 V
MOVOL:575V - Supply voltage:575 V

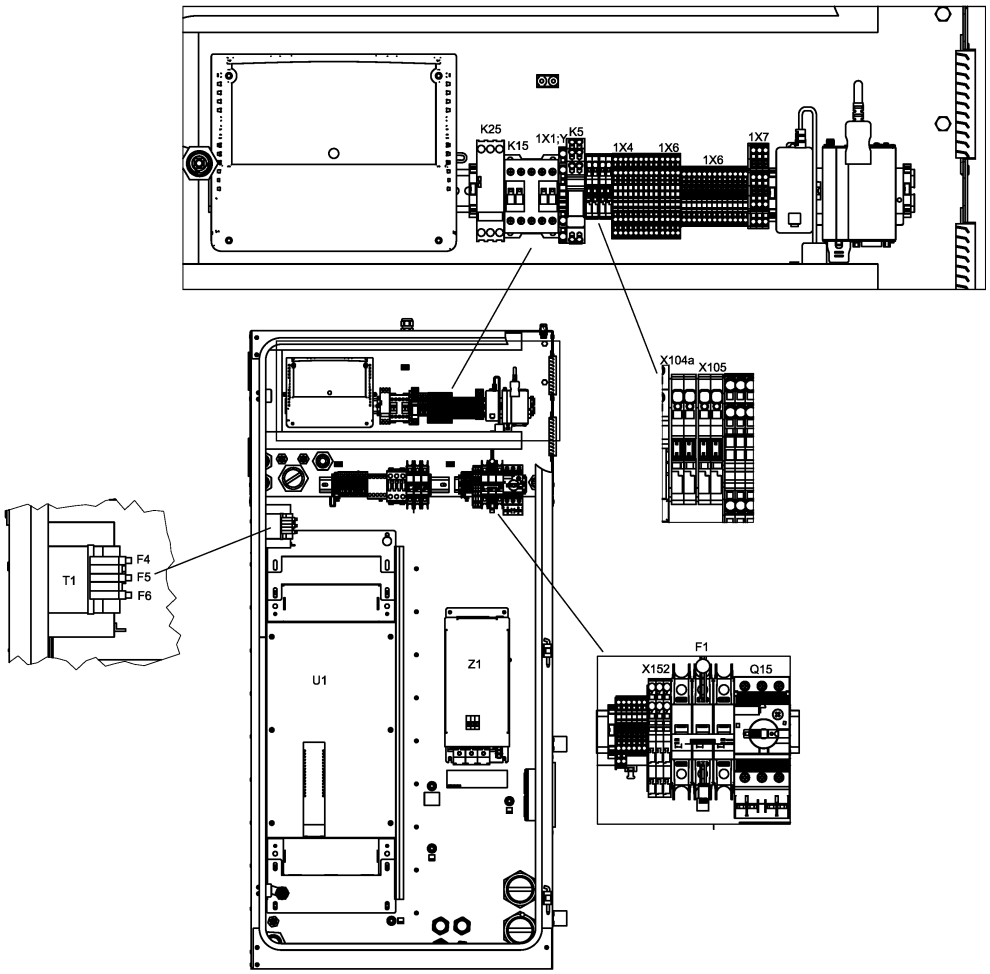
K25
K15
1X1:Y
K5
1X4
1X6
1X6
1X7
X104a
X105
T1
F4
F5
F6
U1
Z1
F1
X152
Q15

Ref	Part Number	Qty	Name	Validity	EL
	1088 0037 99	4	PIN	(17/10/2017 - 11/12/2018)	X152:1; 3
	~~1088 0031 81~~	7	END STOP BRACKET 6MM	(17/10/2017 - 11/12/2018)	
	Electrical legend:	Connector/terminal rail			
	Substituted by:	1089 0577 82 - END RETAINER (quantity: 1)			
	1088 0039 38	2	TERMINAL	(17/10/2017 - 11/12/2018)	1X11:2,5
	1088 0039 40	1	PLATE	(17/10/2017 - 11/12/2018)	1X11
	1088 0039 34	4	TERMINAL	(17/10/2017 - 11/12/2018)	
	Electrical legend:	1X11:30,301,34			
	1088 0039 35	1	PLATE	(17/10/2017 - 11/12/2018)	1X11
	1088 0039 04	2	TERMINAL	(17/10/2017 - 11/12/2018)	X104a
	1088 0037 99	2	PIN	(17/10/2017 - 11/12/2018)	X104a/X105
	1088 0039 02	1	PLATE	(17/10/2017 - 11/12/2018)	X104a
	1088 0039 04	2	TERMINAL	(17/10/2017 - 11/12/2018)	
	1088 0039 02	1	PLATE	(17/10/2017 - 11/12/2018)	
	1088 0039 34	13	TERMINAL	(17/10/2017 - 11/12/2018)	1X6
	1088 0037 69	3	CONNECTOR	(17/10/2017 - 11/12/2018)	1X7
	1088 0039 35	1	PLATE	(17/10/2017 - 11/12/2018)	1X6
	1088 0040 37	1	END PLATE	(17/10/2017 - 11/12/2018)	1X7
	1088 0039 36	9	TERMINAL	(17/10/2017 - 11/12/2018)	1X4
	1088 0039 36	4	TERMINAL	(17/10/2017 - 11/12/2018)	1X6
	1088 0039 37	1	END PLATE	(17/10/2017 - 11/12/2018)	1X4
	1088 0039 37	1	END PLATE	(17/10/2017 - 11/12/2018)	1X6
	1088 0039 37	1	END PLATE	(17/10/2017 - 11/12/2018)	1X1:Y/D
	1088 0037 81	1	CONNECTOR	(17/10/2017 - 11/12/2018)	2X27
	1088 0037 80	1	CONNECTOR	(17/10/2017 - 11/12/2018)	2X28
	1088 0031 32	1	CONNECTOR	(17/10/2017 - 11/12/2018)	2X30
	1088 0031 26	1	CONNECTOR 6-POLE	(17/10/2017 - 11/12/2018)	2X31
	~~1089 9664 06~~	1	SWITCH	(17/10/2017 - 11/12/2018)	Q15
	Substituted by:	1089 9551 97 - AUX.CONTACT CIRCUIT BREAKER (quantity: 1)			
	1089 9551 18	1	CIRCUIT BREAKER	(17/10/2017 - 11/12/2018)	Q15
	1088 0038 26	1	TERMINAL	(17/10/2017 - 11/12/2018)	1X1:Y/D
	1089 9602 79	1	CONTACTOR 110 V	(17/10/2017 - 11/12/2018)	K15
	1089 9461 26	1	PHASE SEQUENCE RELAY	(17/10/2017 - 11/12/2018)	K25
	1088 0032 17	1	RELAY 115 VAC	(17/10/2017 - 11/12/2018)	K5
	0991 8011 21	AR	CABLE TRAY	(17/10/2017 - 11/12/2018)	L=1384mm
	1900 2203 02	1	DRYER RAIL	(17/10/2017 - 11/12/2018)	
	Electrical legend:	Without trafo on dryer			
	1088 0031 13	1	CONNECTOR 13-POLE	(17/10/2017 - 11/12/2018)	1X30
	1088 0037 82	1	CONNECTOR	(17/10/2017 - 11/12/2018)	3X34
	0697 9811 13	1	PLUG	(17/10/2017 - 11/12/2018)	
	Electrical legend:	Energy recovery			
	0989 3700 44	1	LOCKNUT	(17/10/2017 - 11/12/2018)	
	Electrical legend:	Energy recovery			
	0697 9811 12	1	PLUG	(17/10/2017 - 11/12/2018)	
	Electrical legend:	Control circuit of T10			
	0989 3700 43	1	NUT	(17/10/2017 - 11/12/2018)	
	Electrical legend:	Control circuit of T10			

Legend:

FREQ:50HZ - Frequency:50 Hz
FREQ:60HZ - Frequency:60 Hz
IDRY:Y - Integrated dryer:Yes
MODEL:GA90VP_16 - Model:GA 90VSD+
MOVOL:200V - Supply voltage:200 V
MOVOL:230V - Supply voltage:230 V
MOVOL:400V - Supply voltage:400 V
MOVOL:460V - Supply voltage:460 V
MOVOL:500V - Supply voltage:500 V
MOVOL:575V - Supply voltage:575 V

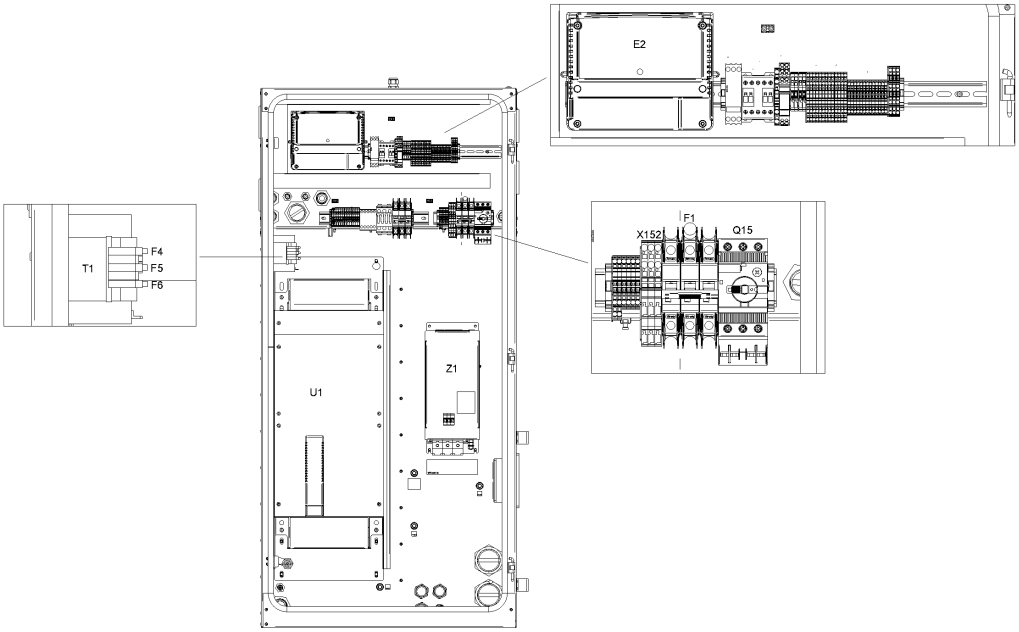
E2
T1
F4
F5
F6
U1
Z1
X152
F1
Q15

26.32 - IT Ancillaries GA 90 VSD+ - 200V-400V-500V/50Hz, 230V-460V-575V/60Hz - Full-Feature (12/12/2018 - 16/12/2019)

((MOVOL:200V , MOVOL:400V , MOVOL:500V) + FREQ:50HZ , (MOVOL:230V , MOVOL:460V , MOVOL:575V) + FREQ:60HZ) + IDRY:Y + MODEL:GA90VP_16

Ref	Part Number	Qty	Name	Validity	EL
	1900 2202 31	1	CUBICLE	(12/12/2018 - 16/12/2019)	
	9820 3000 31	1	ASSEMBLY DRAWING	(12/12/2018 - 16/12/2019)	AD
	9820 3000 27	1	SERVICE DIAGRAM	(12/12/2018 - 16/12/2019)	SD
	1622 3798 72	1	WIRE HARNESS	(12/12/2018 - 16/12/2019)	Comm Cable
	1622 5099 04	1	DI CHANE CABLE (1400MM)	(12/12/2018 - 16/12/2019)	
	Electrical legend:	Comm Cable Loose supply			
	1649 8001 22	1	CUBICLE	(12/12/2018 - 16/12/2019)	MSA
	1649 8001 32	1	PLATE NEOS "D"	(12/12/2018 - 16/12/2019)	
	Electrical legend:	Mounting plate			
	1649 8003 85	1	MOUNTING PLATE	(12/12/2018 - 16/12/2019)	
	Electrical legend:	Mounting plate			
	1649 8002 39	1	WIRE HARNESS	(12/12/2018 - 16/12/2019)	WH
	1649 8002 40	1	WIRE HARNESS	(12/12/2018 - 16/12/2019)	WH
	1649 8002 72	1	CABLE POWER	(12/12/2018 - 16/12/2019)	
	Electrical legend:	Full feature (FF) Drain			
	1649 8002 73	1	WIRE HARNESS	(12/12/2018 - 16/12/2019)	
	Electrical legend:	Pack Drain + Air filter switch			
	1649 8002 75	1	WIRE HARNESS	(12/12/2018 - 16/12/2019)	
	Electrical legend:	Relative Humidity sensor			
	• 1089 9320 10	1	TEMP. SENSOR	(22/07/2019 - 16/12/2019)	
	1649 8001 44	3	MOTOR CABLE	(12/12/2018 - 16/12/2019)	
	Electrical legend:	Motor conduit			
	1649 8001 47	1	MOTOR CABLE	(12/12/2018 - 16/12/2019)	
	Electrical legend:	Motor conduit			
		1	DATA LABEL	(12/12/2018 - 16/12/2019)	Label
	1079 9901 68	1	WARNING LABEL	(12/12/2018 - 16/12/2019)	Label
	1649 8005 00	-	LABEL	(12/12/2018 - 16/12/2019)	Label
	1900 5350 19	1	INVERTER	(12/12/2018 - 16/12/2019)	U1
	1631 2079 00	1	NANOPERMRING	(12/12/2018 - 16/12/2019)	
	Electrical legend:	Nanoperm ring			
	0697 9811 17	2	PLUG	(12/12/2018 - 16/12/2019)	
	Electrical legend:	Plug for transfo supply			
	0989 3700 48	2	NUT	(12/12/2018 - 16/12/2019)	
	Electrical legend:	Nut for transfo supply			
	0698 5140 72	1	CABLE GLAND	(12/12/2018 - 16/12/2019)	Fan
	0698 5140 71	1	CABLE GLAND	(12/12/2018 - 16/12/2019)	
	Electrical legend:	Ambient sensor			
	0697 9809 20	1	LOCKNUT	(12/12/2018 - 16/12/2019)	
	Electrical legend:	Ambient sensor			
	1089 9556 44	1	FAN WITH FILTER	(12/12/2018 - 16/12/2019)	Cubicle fan
		4	AIR INLET W/O FILTER	(12/12/2018 - 16/12/2019)	Filter grid
	Service kits:	2901 9901 02 - PREVENTIVE MAINTENANCE KIT - GA 90 VSD+, GA 110 VSD+ 2901 9900 96 - AIR FILTER KIT - GA 90 VSD+, GA 110 VSD+			
	1088 0032 09	1	CONNECTOR	(12/12/2018 - 16/12/2019)	X3
	1089 9572 06	1	LINE FILTER	(12/12/2018 - 16/12/2019)	Z1 for 90kw
	1089 9562 04	1	STRAP	(12/12/2018 - 16/12/2019)	HF-screen
	1089 9514 56	1	TRANSFORMER	(12/12/2018 - 16/12/2019)	T1
	1089 9522 26	1	CIRCUIT BREAKER	(12/12/2018 - 16/12/2019)	F1
	1089 9513 41	1	PUSH BUTTON	(12/12/2018 - 16/12/2019)	S3
	1089 9513 28	1	HOLDER	(12/12/2018 - 16/12/2019)	S3
	~~1089 9513 30~~	4	CONTACTOR	(12/12/2018 - 16/12/2019)	S3
	Substituted by:	1089 9513 04 - CONTACT BLOCK (quantity: 1)			
	1088 0031 02	1	CONNECTOR 2-POLE	(12/12/2018 - 17/02/2019)	
	1088 0039 07	3	TERMINAL	(12/12/2018 - 16/12/2019)	X152

Legend:

FREQ:50HZ - Frequency:50 Hz
FREQ:60HZ - Frequency:60 Hz
IDRY:Y - Integrated dryer:Yes
MODEL:GA90VP_16 - Model:GA 90VSD+
MOVOL:200V - Supply voltage:200 V
MOVOL:230V - Supply voltage:230 V
MOVOL:400V - Supply voltage:400 V
MOVOL:460V - Supply voltage:460 V
MOVOL:500V - Supply voltage:500 V
MOVOL:575V - Supply voltage:575 V

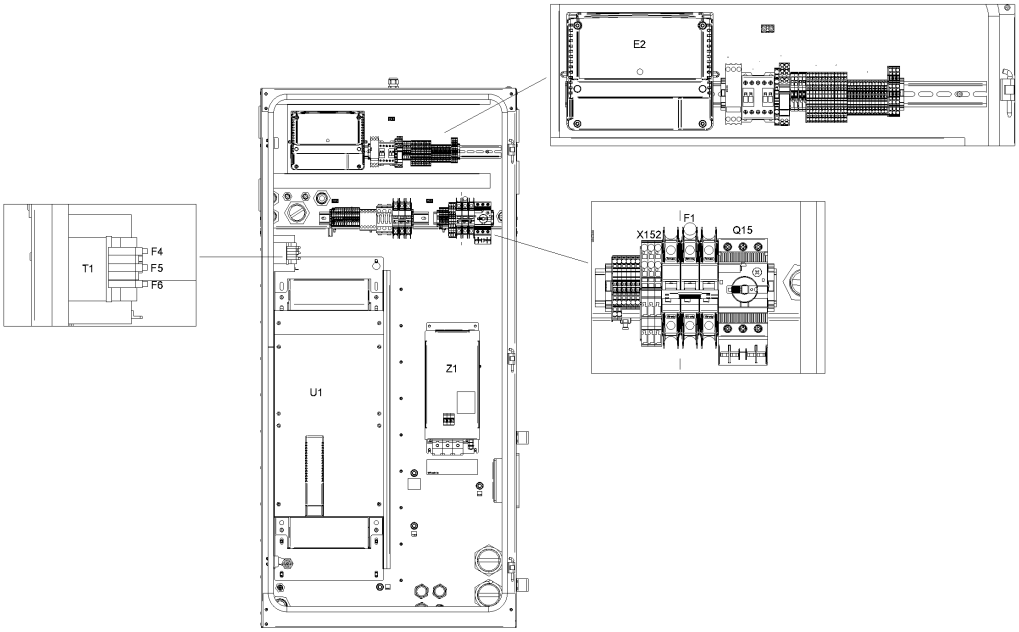
E2
T1
F4
F5
F6
U1
Z1
X152
F1
Q15

Ref	Part Number	Qty	Name	Validity	EL
	1088 0039 05	1	PLATE	(12/12/2018 - 16/12/2019)	X152
	1088 0039 26	1	CONNECTOR	(12/12/2018 - 16/12/2019)	
	Electrical legend:	X152 (remove coding pin 1,3)			
	1088 0037 99	4	PIN	(12/12/2018 - 16/12/2019)	X152:1; 3
	~~1088 0031 81~~	7	END STOP BRACKET 6MM	(12/12/2018 - 16/12/2019)	
	Electrical legend:	Connector/terminal rail			
	Substituted by:	1089 0577 82 - END RETAINER (quantity: 1)			
	1088 0039 38	2	TERMINAL	(12/12/2018 - 16/12/2019)	1X11:2,5
	1088 0039 40	1	PLATE	(12/12/2018 - 16/12/2019)	1X11
	1088 0039 34	4	TERMINAL	(12/12/2018 - 16/12/2019)	
	Electrical legend:	1X11:30,301,34			
	1088 0039 35	1	PLATE	(12/12/2018 - 16/12/2019)	1X11
	1088 0039 04	2	TERMINAL	(12/12/2018 - 16/12/2019)	X104a
	1088 0037 99	2	PIN	(12/12/2018 - 16/12/2019)	X104a/X105
	1088 0039 02	1	PLATE	(12/12/2018 - 16/12/2019)	X104a
	1088 0039 07	2	TERMINAL	(12/12/2018 - 16/12/2019)	X105
	1088 0039 05	1	PLATE	(12/12/2018 - 16/12/2019)	X105
	1088 0039 34	13	TERMINAL	(12/12/2018 - 16/12/2019)	1X6
	1088 0037 69	3	CONNECTOR	(12/12/2018 - 16/12/2019)	1X7
	1088 0039 35	1	PLATE	(12/12/2018 - 16/12/2019)	1X6
	1088 0040 37	1	END PLATE	(12/12/2018 - 16/12/2019)	1X7
	1088 0039 36	9	TERMINAL	(12/12/2018 - 16/12/2019)	1X4
	1088 0039 36	4	TERMINAL	(12/12/2018 - 16/12/2019)	1X6
	1088 0039 37	1	END PLATE	(12/12/2018 - 16/12/2019)	1X4
	1088 0039 37	1	END PLATE	(12/12/2018 - 16/12/2019)	1X6
	1088 0039 37	1	END PLATE	(12/12/2018 - 16/12/2019)	1X1:Y/D
	1088 0037 81	1	CONNECTOR	(12/12/2018 - 16/12/2019)	2X27
	1088 0037 80	1	CONNECTOR	(12/12/2018 - 16/12/2019)	2X28
	1088 0031 32	1	CONNECTOR	(12/12/2018 - 16/12/2019)	2X30
	1088 0031 26	1	CONNECTOR 6-POLE	(12/12/2018 - 16/12/2019)	2X31
	~~1089 9664 06~~	1	SWITCH	(12/12/2018 - 16/12/2019)	Q15
	Substituted by:	1089 9551 97 - AUX.CONTACT CIRCUIT BREAKER (quantity: 1)			
	1089 9551 18	1	CIRCUIT BREAKER	(12/12/2018 - 16/12/2019)	Q15
	1088 0038 26	1	TERMINAL	(12/12/2018 - 16/12/2019)	1X1:Y/D
	1089 9602 79	1	CONTACTOR 110 V	(12/12/2018 - 16/12/2019)	K15
	1089 9461 26	1	PHASE SEQUENCE RELAY	(12/12/2018 - 16/12/2019)	K25
	1088 0032 17	1	RELAY 115 VAC	(12/12/2018 - 16/12/2019)	K5
	0991 8011 21	AR	CABLE TRAY	(12/12/2018 - 16/12/2019)	L=1384mm
	1900 2203 02	1	DRYER RAIL	(12/12/2018 - 16/12/2019)	
	Electrical legend:	Without trafo on dryer			
	1088 0031 13	1	CONNECTOR 13-POLE	(12/12/2018 - 16/12/2019)	1X30
	1088 0037 82	1	CONNECTOR	(12/12/2018 - 16/12/2019)	3X34
	0697 9811 13	1	PLUG	(12/12/2018 - 16/12/2019)	
	Electrical legend:	Energy recovery			
	0989 3700 44	1	LOCKNUT	(12/12/2018 - 16/12/2019)	
	Electrical legend:	Energy recovery			
	0697 9811 12	1	PLUG	(12/12/2018 - 16/12/2019)	
	Electrical legend:	Control circuit of T10			
	0989 3700 43	1	NUT	(12/12/2018 - 16/12/2019)	
	Electrical legend:	Control circuit of T10			
	0697 9811 10	1	PLUG M	(12/12/2018 - 16/12/2019)	
	Electrical legend:	Plug for smartbox hole			

Legend:

FREQ:50HZ - Frequency:50 Hz
FREQ:60HZ - Frequency:60 Hz
IDRY:Y - Integrated dryer:Yes
MODEL:GA90VP_16 - Model:GA 90VSD+
MOVOL:200V - Supply voltage:200 V
MOVOL:230V - Supply voltage:230 V
MOVOL:400V - Supply voltage:400 V
MOVOL:460V - Supply voltage:460 V
MOVOL:500V - Supply voltage:500 V
MOVOL:575V - Supply voltage:575 V

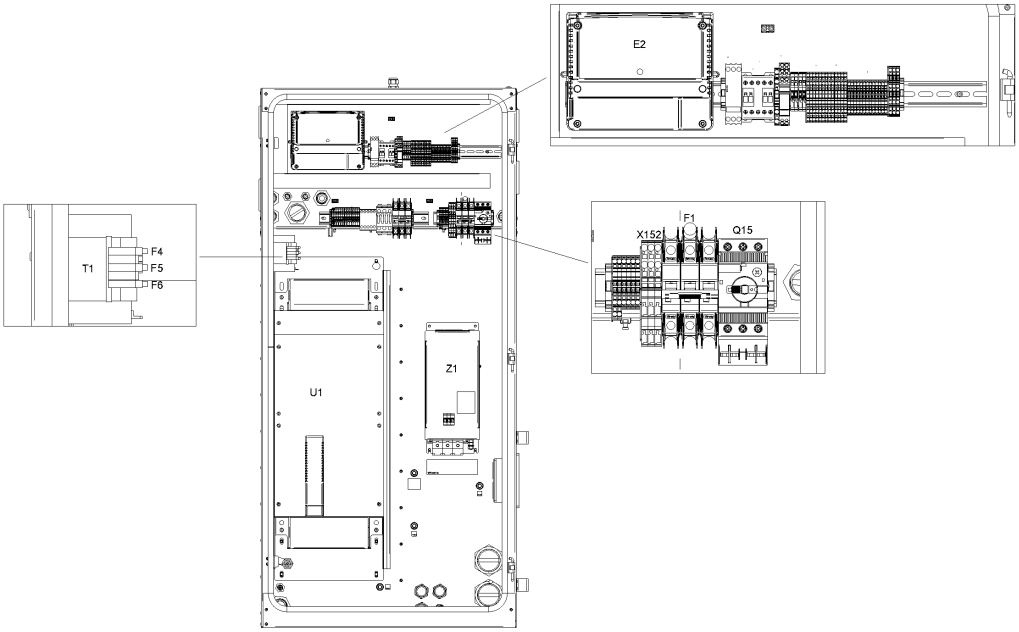
E2
T1
F4
F5
F6
U1
Z1
X152
F1
Q15

26.32 - IT Ancillaries GA 90 VSD+ - 200V-400V-500V/50Hz, 230V-460V-575V/60Hz - Full-Feature (12/12/2018 - 16/12/2019)

((MOVOL:200V , MOVOL:400V , MOVOL:500V) + FREQ:50HZ , (MOVOL:230V , MOVOL:460V , MOVOL:575V) + FREQ:60HZ) + IDRY:Y + MODEL:GA90VP_16

Ref	Part Number	Qty	Name	Validity	EL
	0989 3700 41	1	LOCKNUT	(12/12/2018 - 16/12/2019)	
	Electrical legend:	Nut for smartbox hole			

Legend:

FREQ:50HZ - Frequency:50 Hz
FREQ:60HZ - Frequency:60 Hz
IDRY:Y - Integrated dryer:Yes
MODEL:GA90VP_16 - Model:GA 90VSD+
MOVOL:200V - Supply voltage:200 V
MOVOL:230V - Supply voltage:230 V
MOVOL:400V - Supply voltage:400 V
MOVOL:460V - Supply voltage:460 V
MOVOL:500V - Supply voltage:500 V
MOVOL:575V - Supply voltage:575 V

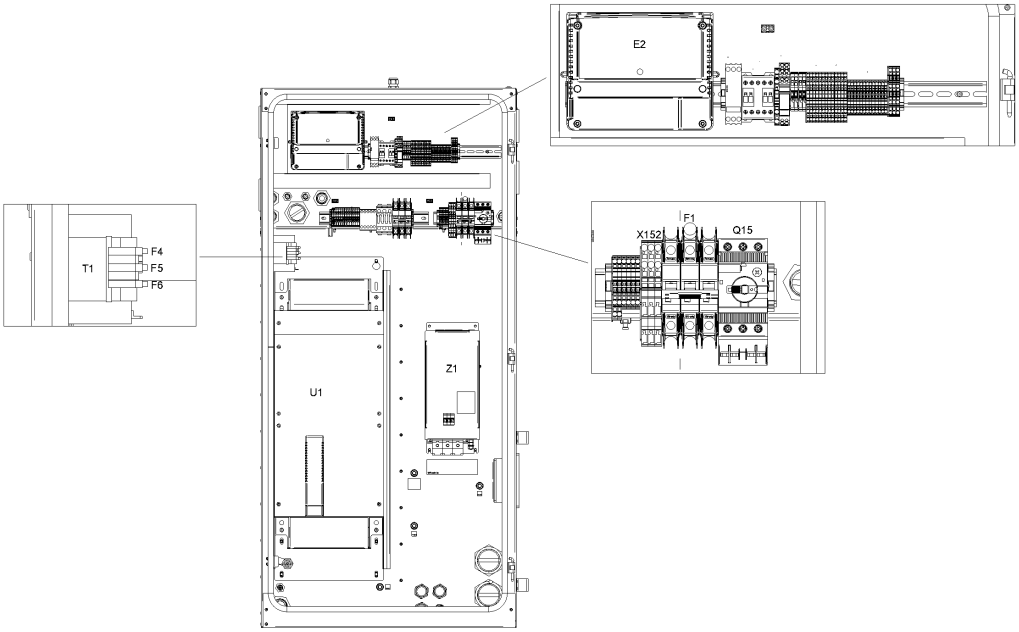
E2
T1
F4
F5
F6
U1
Z1
X152
F1
Q15

26.33 - IT Ancillaries GA 90 VSD+ - 200V-400V-500V/50Hz, 230V-460V-575V/60Hz - Full-Feature (17/12/2019 - ...)

((MOVOL:200V , MOVOL:400V , MOVOL:500V) + FREQ:50HZ , (MOVOL:230V , MOVOL:460V , MOVOL:575V) + FREQ:60HZ) + IDRY:Y + MODEL:GA90VP_16

Ref	Part Number	Qty	Name	Validity	EL
	1900 2202 51	1	CUBICLE	(17/12/2019 - ...)	
	9820 3000 31	1	ASSEMBLY DRAWING	(17/12/2019 - ...)	AD
	9820 3000 27	1	SERVICE DIAGRAM	(17/12/2019 - ...)	SD
	1622 3798 72	1	WIRE HARNESS	(17/12/2019 - ...)	Comm Cable
	1622 5099 04	1	DI CHANE CABLE (1400MM)	(17/12/2019 - ...)	
	Electrical legend:	Comm Cable Loose supply			
	1649 8006 00	1	CUBICLE	(17/12/2019 - ...)	MSA
	1649 8001 32	1	PLATE NEOS "D"	(17/12/2019 - ...)	
	Electrical legend:	Mounting plate			
	1649 8003 85	1	MOUNTING PLATE	(17/12/2019 - ...)	
	Electrical legend:	Mounting plate			
	1649 8002 39	1	WIRE HARNESS	(17/12/2019 - ...)	WH
	1649 8002 40	1	WIRE HARNESS	(17/12/2019 - ...)	WH
	1649 8002 72	1	CABLE POWER	(17/12/2019 - ...)	
	Electrical legend:	Full feature (FF) Drain			
	1649 8002 73	1	WIRE HARNESS	(17/12/2019 - ...)	
	Electrical legend:	Pack Drain + Air filter switch			
	1649 8002 75	1	WIRE HARNESS	(17/12/2019 - ...)	
	Electrical legend:	Relative Humidity sensor			
	1649 8001 44	3	MOTOR CABLE	(17/12/2019 - ...)	
	Electrical legend:	Motor conduit			
	1649 8001 47	1	MOTOR CABLE	(17/12/2019 - ...)	
	Electrical legend:	Motor conduit			
	1625 3906 31	1	CUBICLE	(17/12/2019 - ...)	Label
	1079 9901 68	1	WARNING LABEL	(17/12/2019 - ...)	Label
	1649 8005 00	1	LABEL	(17/12/2019 - ...)	Label
	1900 5350 19	1	INVERTER	(17/12/2019 - ...)	U1
	1631 2079 00	1	NANOPERMRING	(17/12/2019 - ...)	
	Electrical legend:	Nanoperm ring			
	0697 9811 17	2	PLUG	(17/12/2019 - ...)	
	Electrical legend:	Plug for transfo supply			
	0989 3700 48	2	NUT	(17/12/2019 - ...)	
	Electrical legend:	Nut for transfo supply			
	0698 5140 72	1	CABLE GLAND	(17/12/2019 - ...)	Fan
	0698 5140 71	1	CABLE GLAND	(17/12/2019 - ...)	
	Electrical legend:	Ambient sensor			
	0697 9809 20	1	LOCKNUT	(17/12/2019 - ...)	
	Electrical legend:	Ambient sensor			
	1089 9556 44	1	FAN WITH FILTER	(17/12/2019 - ...)	Cubicle fan
	1089 9556 72	4	AIR INLET WITHOUT FILTER	(17/12/2019 - ...)	Filter grid
	1088 0032 09	1	CONNECTOR	(17/12/2019 - ...)	X3
	1089 9572 06	1	LINE FILTER	(17/12/2019 - ...)	Z1 for 90kw
	1089 9562 04	1	STRAP	(17/12/2019 - ...)	HF-screen
	1089 9514 56	1	TRANSFORMER	(17/12/2019 - ...)	T1
	1089 9522 26	1	CIRCUIT BREAKER	(17/12/2019 - ...)	F1
	1089 9513 41	1	PUSH BUTTON	(17/12/2019 - ...)	S3
	1089 9513 28	1	HOLDER	(17/12/2019 - ...)	S3
	~~1089 9513 30~~	4	CONTACTOR	(17/12/2019 - ...)	S3
	Substituted by:	1089 9513 04 - CONTACT BLOCK (quantity: 1)			
	1088 0039 07	3	TERMINAL	(17/12/2019 - ...)	X152
	1088 0039 05	1	PLATE	(17/12/2019 - ...)	X152
	1088 0039 26	1	CONNECTOR	(17/12/2019 - ...)	
	Electrical legend:	X152 (remove coding pin 1,3)			
	1088 0037 99	4	PIN	(17/12/2019 - ...)	X152:1; 3

Legend:

FREQ:50HZ - Frequency:50 Hz
FREQ:60HZ - Frequency:60 Hz
IDRY:Y - Integrated dryer:Yes
MODEL:GA90VP_16 - Model:GA 90VSD+
MOVOL:200V - Supply voltage:200 V
MOVOL:230V - Supply voltage:230 V
MOVOL:400V - Supply voltage:400 V
MOVOL:460V - Supply voltage:460 V
MOVOL:500V - Supply voltage:500 V
MOVOL:575V - Supply voltage:575 V

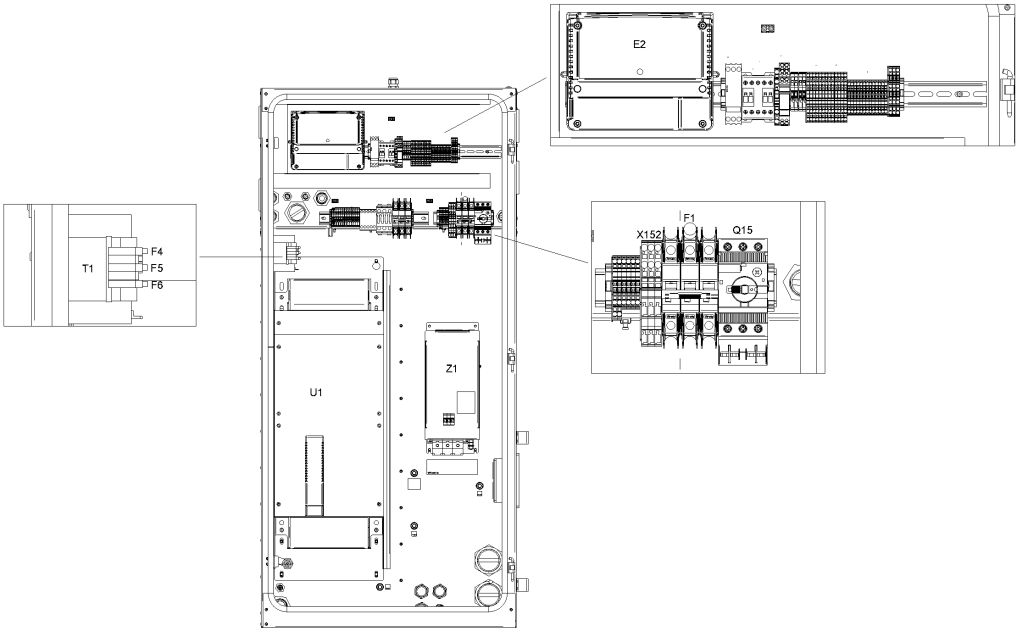
E2
T1
F4
F5
F6
U1
Z1
X152
F1
Q15

26.33 - IT Ancillaries GA 90 VSD+ - 200V-400V-500V/50Hz, 230V-460V-575V/60Hz - Full-Feature (17/12/2019 - ...)

((MOVOL:200V , MOVOL:400V , MOVOL:500V) + FREQ:50HZ , (MOVOL:230V , MOVOL:460V , MOVOL:575V) + FREQ:60HZ) + IDRY:Y + MODEL:GA90VP_16

Ref	Part Number	Qty	Name	Validity	EL
	~~1088 0031 81~~	7	END STOP BRACKET 6MM	(17/12/2019 - ...)	
	Electrical legend:	Connector/terminal rail			
	Substituted by:	1089 0577 82 - END RETAINER (quantity: 1)			
	1088 0039 38	2	TERMINAL	(17/12/2019 - ...)	1X11:2,5
	1088 0039 40	1	PLATE	(17/12/2019 - ...)	1X11
	1088 0039 34	4	TERMINAL	(17/12/2019 - ...)	
	Electrical legend:	1X11:30,301,34			
	1088 0039 35	1	PLATE	(17/12/2019 - ...)	1X11
	1088 0039 04	2	TERMINAL	(17/12/2019 - ...)	X104a
	1088 0037 99	2	PIN	(17/12/2019 - ...)	X104a/X105
	1088 0039 02	1	PLATE	(17/12/2019 - ...)	X104a
	1088 0039 07	2	TERMINAL	(17/12/2019 - ...)	X105
	1088 0039 05	1	PLATE	(17/12/2019 - ...)	X105
	1088 0039 34	13	TERMINAL	(17/12/2019 - ...)	1X6
	1088 0037 69	3	CONNECTOR	(17/12/2019 - ...)	1X7
	1088 0039 35	1	PLATE	(17/12/2019 - ...)	1X6
	1088 0040 37	1	END PLATE	(17/12/2019 - ...)	1X7
	1088 0039 36	9	TERMINAL	(17/12/2019 - ...)	1X4
	1088 0039 36	4	TERMINAL	(17/12/2019 - ...)	1X6
	1088 0039 37	1	END PLATE	(17/12/2019 - ...)	1X4
	1088 0039 37	1	END PLATE	(17/12/2019 - ...)	1X6
	1088 0039 37	1	END PLATE	(17/12/2019 - ...)	1X1:Y/D
	1088 0037 81	1	CONNECTOR	(17/12/2019 - ...)	2X27
	1088 0037 80	1	CONNECTOR	(17/12/2019 - ...)	2X28
	1088 0031 32	1	CONNECTOR	(17/12/2019 - ...)	2X30
	1088 0031 26	1	CONNECTOR 6-POLE	(17/12/2019 - ...)	2X31
	~~1089 9664 06~~	1	SWITCH	(17/12/2019 - ...)	Q15
	Substituted by:	1089 9551 97 - AUX.CONTACT CIRCUIT BREAKER (quantity: 1)			
	1089 9551 18	1	CIRCUIT BREAKER	(17/12/2019 - ...)	Q15
	1088 0038 26	1	TERMINAL	(17/12/2019 - ...)	1X1:Y/D
	1089 9602 79	1	CONTACTOR 110 V	(17/12/2019 - ...)	K15
	1089 9461 26	1	PHASE SEQUENCE RELAY	(17/12/2019 - ...)	K25
	1088 0032 17	1	RELAY 115 VAC	(17/12/2019 - ...)	K5
	0991 8011 21	AR	CABLE TRAY	(17/12/2019 - ...)	L=1384mm
	1900 2203 02	1	DRYER RAIL	(17/12/2019 - ...)	
	Electrical legend:	Without trafo on dryer			
	1088 0031 13	1	CONNECTOR 13-POLE	(17/12/2019 - ...)	1X30
	1088 0037 82	1	CONNECTOR	(17/12/2019 - ...)	3X34
	0697 9811 13	1	PLUG	(17/12/2019 - ...)	
	Electrical legend:	Energy recovery			
	0989 3700 44	1	LOCKNUT	(17/12/2019 - ...)	
	Electrical legend:	Energy recovery			
	0697 9811 12	1	PLUG	(17/12/2019 - ...)	
	Electrical legend:	Control circuit of T10			
	0989 3700 43	1	NUT	(17/12/2019 - ...)	
	Electrical legend:	Control circuit of T10			
	0697 9811 10	1	PLUG	(17/12/2019 - ...)	
	Electrical legend:	Plug for smartbox hole			
	0989 3700 41	1	LOCKNUT	(17/12/2019 - ...)	
	Electrical legend:	Nut for smartbox hole			
	1089 9556 37	1	AIR INLET WITH FILTER	(17/12/2019 - ...)	Fan Filter

Legend:

FREQ:50HZ - Frequency:50 Hz
MODEL:GA90VP_16 - Model:GA 90VSD+
MOVOL:400V - Supply voltage:400 V
MOVOL:575V - Supply voltage:575 V
FREQ:60HZ - Frequency:60 Hz
MOVOL:200V - Supply voltage:200 V
MOVOL:460V - Supply voltage:460 V
IDRY:Y - Integrated dryer:Yes
MOVOL:230V - Supply voltage:230 V
MOVOL:500V - Supply voltage:500 V

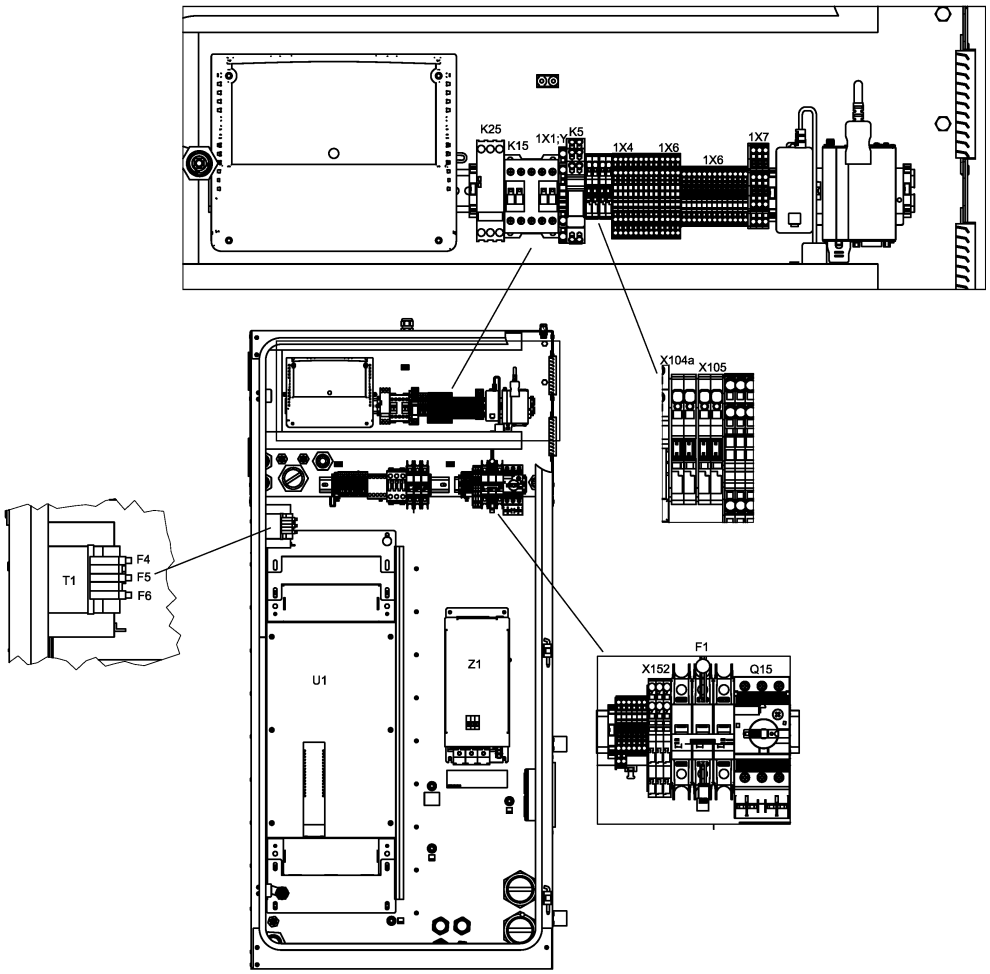
K25
K15
1X1:Y
K5
1X4
1X6
1X6
1X7
X104a
X105
T1
F4
F5
F6
U1
Z1
F1
X152
Q15

26.34 - IT Ancillaries GA 110 VSD+ - 200V-400V-500V/50Hz, 230V-460V-575V/60Hz - Full-Feature (17/10/2017 - 11/12/2018)

((MOVOL:200V , MOVOL:400V , MOVOL:500V) + FREQ:50HZ , (MOVOL:230V , MOVOL:460V , MOVOL:575V) + FREQ:60HZ) + IDRY:Y + MODEL:GA110VP_16

Ref	Part Number	Qty	Name	Validity	EL
	1900 2202 18	1	CUBICLE	(17/10/2017 - 11/12/2018)	
	9820 3000 21	1	CUBICLE LAYOUT	(17/10/2017 - 11/12/2018)	-
	9820 3000 22	1	SERVICE DIAGRAM	(17/10/2017 - 11/12/2018)	-
	1622 3798 70	1	WIRE HARNESS COMM CABLE	(17/10/2017 - 11/12/2018)	-
	1622 5099 04	1	DI CHANE CABLE (1400MM)	(17/10/2017 - 11/12/2018)	
	Electrical legend:	Comm Cable Loose supply			
	1649 8001 22	1	CUBICLE	(17/10/2017 - 11/12/2018)	-
•	1202 6584 02	1	SEAL		-
	1649 8001 31	1	PLATE NEOS "E"	(17/10/2017 - 11/12/2018)	-
	1649 8003 85	1	MOUNTING PLATE	(17/10/2017 - 11/12/2018)	-
	1649 8002 39	1	WIRE HARNESS	(17/10/2017 - 11/12/2018)	-
	1649 8002 40	1	WIRE HARNESS	(17/10/2017 - 11/12/2018)	-
	1649 8002 72	1	CABLE POWER	(17/10/2017 - 11/12/2018)	
	Electrical legend:	Full feature (FF) Drain			
	1649 8002 73	1	WIRE HARNESS	(17/10/2017 - 11/12/2018)	
	Electrical legend:	Pack Drain + Air filter switch			
	1649 8002 75	1	WIRE HARNESS	(17/10/2017 - 11/12/2018)	
	Electrical legend:	Relative Humidity sensor			
	1649 8001 43	3	MOTOR CABLE	(17/10/2017 - 11/12/2018)	-
	1649 8001 46	1	MOTOR CABLE	(17/10/2017 - 11/12/2018)	-
		1	DATA LABEL	(02/02/2018 - 11/12/2018)	-
		1	DATA LABEL	(17/10/2017 - 01/02/2018)	-
	1079 9901 68	1	WARNING LABEL	(17/10/2017 - 11/12/2018)	-
	1900 5350 98	1	INVERTER	(17/10/2017 - 11/12/2018)	U1
	1631 2079 00	1	NANOPERMRING	(17/10/2017 - 11/12/2018)	-
	0697 9811 17	2	PLUG	(17/10/2017 - 11/12/2018)	
	Electrical legend:	Plug for transfo supply			
	0989 3700 48	2	NUT	(17/10/2017 - 11/12/2018)	
	Electrical legend:	Nut for transfo supply			
	0698 5140 72	1	CABLE GLAND	(17/10/2017 - 11/12/2018)	Fan
	0698 5140 71	1	CABLE GLAND	(17/10/2017 - 11/12/2018)	
	Electrical legend:	Ambient sensor			
	0697 9809 20	1	LOCKNUT	(17/10/2017 - 11/12/2018)	
	Electrical legend:	Ambient sensor			
	1089 9556 44	1	FAN WITH FILTER	(17/10/2017 - 11/12/2018)	Cubicle fan
		4	AIR INLET W/O FILTER	(17/10/2017 - 11/12/2018)	-
	Service kits:	2901 9901 02 - PREVENTIVE MAINTENANCE KIT - GA 90 VSD+, GA 110 VSD+ 2901 9900 96 - AIR FILTER KIT - GA 90 VSD+, GA 110 VSD+			
	1088 0032 09	1	CONNECTOR	(17/10/2017 - 11/12/2018)	X3
	1089 9572 04	1	LINE FILTER	(17/10/2017 - 11/12/2018)	Z1 for 110kw
	Electrical legend:	Z1 for 110kw			
	1089 9562 04	1	STRAP	(17/10/2017 - 11/12/2018)	HF-screen
	1089 9514 56	1	TRANSFORMER	(17/10/2017 - 11/12/2018)	T1
	1089 9522 26	1	CIRCUIT BREAKER	(17/10/2017 - 11/12/2018)	F1
	1089 9513 41	1	PUSH BUTTON	(17/10/2017 - 11/12/2018)	S3
	1089 9513 28	1	HOLDER	(17/10/2017 - 11/12/2018)	S3
	~~1089 9513 30~~	4	CONTACTOR	(17/10/2017 - 11/12/2018)	S3
	Substituted by:	1089 9513 04 - CONTACT BLOCK (quantity: 1)			
	1088 0031 02	1	CONNECTOR 2-POLE	(17/10/2017 - 11/12/2018)	
	Electrical legend:	X153 (Smartbox)			
	1088 0039 07	3	TERMINAL	(17/10/2017 - 11/12/2018)	X152
	1088 0039 05	1	PLATE	(17/10/2017 - 11/12/2018)	X152
	1088 0039 26	1	CONNECTOR	(17/10/2017 - 11/12/2018)	

Legend:

FREQ:50HZ - Frequency:50 Hz
FREQ:60HZ - Frequency:60 Hz
IDRY:Y - Integrated dryer:Yes
MODEL:GA110VP_16 - Model:GA 110VSD+
MOVOL:200V - Supply voltage:200 V
MOVOL:230V - Supply voltage:230 V
MOVOL:400V - Supply voltage:400 V
MOVOL:460V - Supply voltage:460 V
MOVOL:500V - Supply voltage:500 V
MOVOL:575V - Supply voltage:575 V

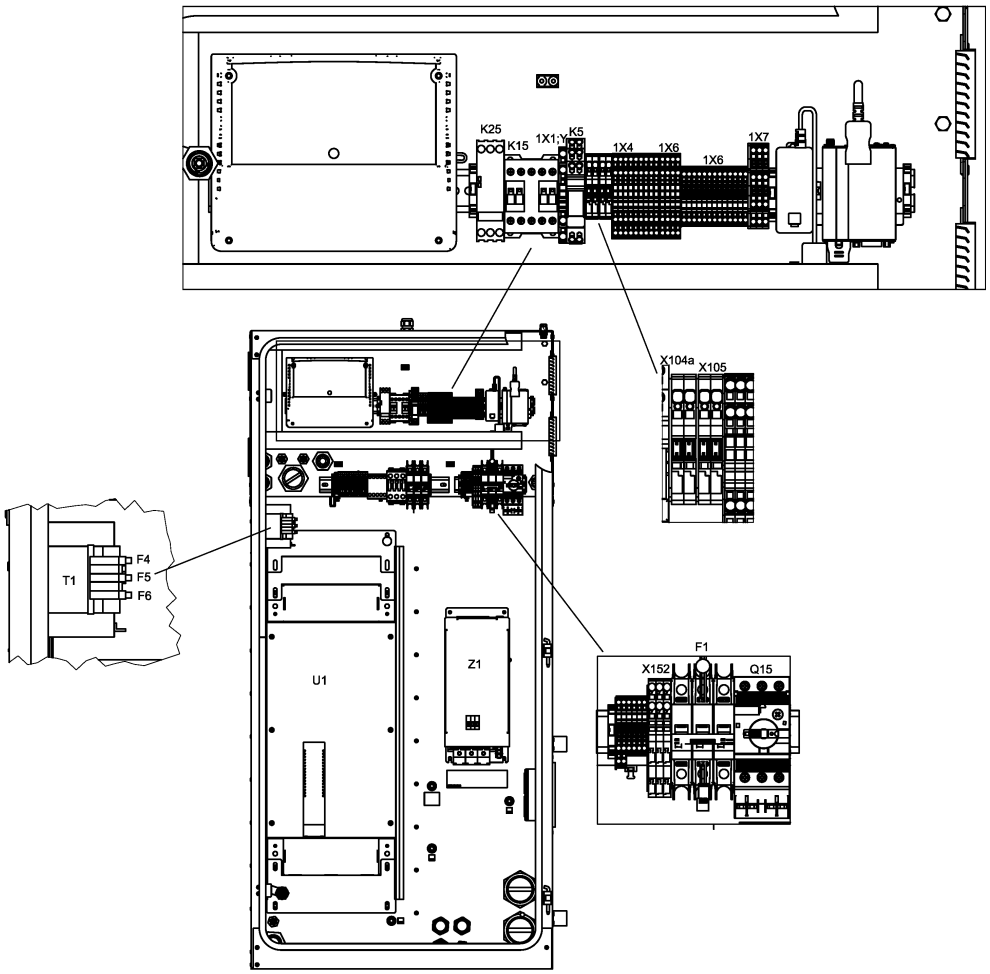
K25
K15
1X1:Y
K5
1X4
1X6
1X6
1X7
X104a
X105
T1
F4
F5
F6
U1
Z1
F1
X152
Q15

Ref	Part Number	Qty	Name	Validity	EL
	Electrical legend:	X152 (remove coding pin 1,3)			
	1088 0037 99	4	PIN	(17/10/2017 - 11/12/2018)	X152:1; 3
	~~1088 0031 81~~	7	END STOP BRACKET 6MM	(17/10/2017 - 11/12/2018)	
	Electrical legend:	Connector/terminal rail			
	Substituted by:	1089 0577 82 - END RETAINER (quantity: 1)			
	1088 0039 38	2	TERMINAL	(17/10/2017 - 11/12/2018)	1X11:2,5
	1088 0039 40	1	PLATE	(17/10/2017 - 11/12/2018)	1X11
	1088 0039 34	4	TERMINAL	(17/10/2017 - 11/12/2018)	
	Electrical legend:	1X11:30,301,34			
	1088 0039 35	1	PLATE	(17/10/2017 - 11/12/2018)	1X11
	1088 0039 04	2	TERMINAL	(17/10/2017 - 11/12/2018)	X104a
	1088 0037 99	2	PIN	(17/10/2017 - 11/12/2018)	X104a/X105
	1088 0039 02	1	PLATE	(17/10/2017 - 11/12/2018)	X104a
	1088 0039 04	2	TERMINAL	(17/10/2017 - 11/12/2018)	
	1088 0039 02	1	PLATE	(17/10/2017 - 11/12/2018)	
	1088 0039 34	13	TERMINAL	(17/10/2017 - 11/12/2018)	1X6
	1088 0037 69	3	CONNECTOR	(17/10/2017 - 11/12/2018)	1X7
	1088 0039 35	1	PLATE	(17/10/2017 - 11/12/2018)	1X6
	1088 0040 37	1	END PLATE	(17/10/2017 - 11/12/2018)	1X7
	1088 0039 36	9	TERMINAL	(17/10/2017 - 11/12/2018)	1X4
	1088 0039 36	4	TERMINAL	(17/10/2017 - 11/12/2018)	1X6
	1088 0039 37	1	END PLATE	(17/10/2017 - 11/12/2018)	1X4
	1088 0039 37	1	END PLATE	(17/10/2017 - 11/12/2018)	1X6
	1088 0039 37	1	END PLATE	(17/10/2017 - 11/12/2018)	1X1:Y/D
	1088 0037 81	1	CONNECTOR	(17/10/2017 - 11/12/2018)	2X27
	1088 0037 80	1	CONNECTOR	(17/10/2017 - 11/12/2018)	2X28
	1088 0031 32	1	CONNECTOR	(17/10/2017 - 11/12/2018)	2X30
	1088 0031 26	1	CONNECTOR 6-POLE	(17/10/2017 - 11/12/2018)	2X31
	~~1089 9664 06~~	1	SWITCH	(17/10/2017 - 11/12/2018)	Q15
	Substituted by:	1089 9551 97 - AUX.CONTACT CIRCUIT BREAKER (quantity: 1)			
	1089 9551 19	1	CIRCUIT BREAKER	(17/10/2017 - 11/12/2018)	Q15
	1088 0038 26	1	TERMINAL	(17/10/2017 - 11/12/2018)	1X1:Y/D
	1089 9602 79	1	CONTACTOR 110 V	(17/10/2017 - 11/12/2018)	K15
	1089 9461 26	1	PHASE SEQUENCE RELAY	(17/10/2017 - 11/12/2018)	K25
	1088 0032 17	1	RELAY 115 VAC	(17/10/2017 - 11/12/2018)	K5
	0991 8011 21	AR	CABLE TRAY	(17/10/2017 - 11/12/2018)	L=1384mm
	1900 2203 02	1	DRYER RAIL	(17/10/2017 - 11/12/2018)	
	Electrical legend:	Without trafo on dryer			
	1088 0031 13	1	CONNECTOR 13-POLE	(17/10/2017 - 11/12/2018)	1X30
	1088 0037 82	1	CONNECTOR	(17/10/2017 - 11/12/2018)	3X34
	0697 9811 13	1	PLUG	(17/10/2017 - 11/12/2018)	
	Electrical legend:	Energy recovery			
	0989 3700 44	1	LOCKNUT	(17/10/2017 - 11/12/2018)	
	Electrical legend:	Energy recovery			
	0697 9811 12	1	PLUG	(17/10/2017 - 11/12/2018)	
	Electrical legend:	Control circuit of T10			
	0989 3700 43	1	NUT	(17/10/2017 - 11/12/2018)	
	Electrical legend:	Control circuit of T10			

Legend:

FREQ:50HZ - Frequency:50 Hz
FREQ:60HZ - Frequency:60 Hz
IDRY:Y - Integrated dryer:Yes
MODEL:GA110VP_16 - Model:GA 110VSD+
MOVOL:200V - Supply voltage:200 V
MOVOL:230V - Supply voltage:230 V
MOVOL:400V - Supply voltage:400 V
MOVOL:460V - Supply voltage:460 V
MOVOL:500V - Supply voltage:500 V
MOVOL:575V - Supply voltage:575 V

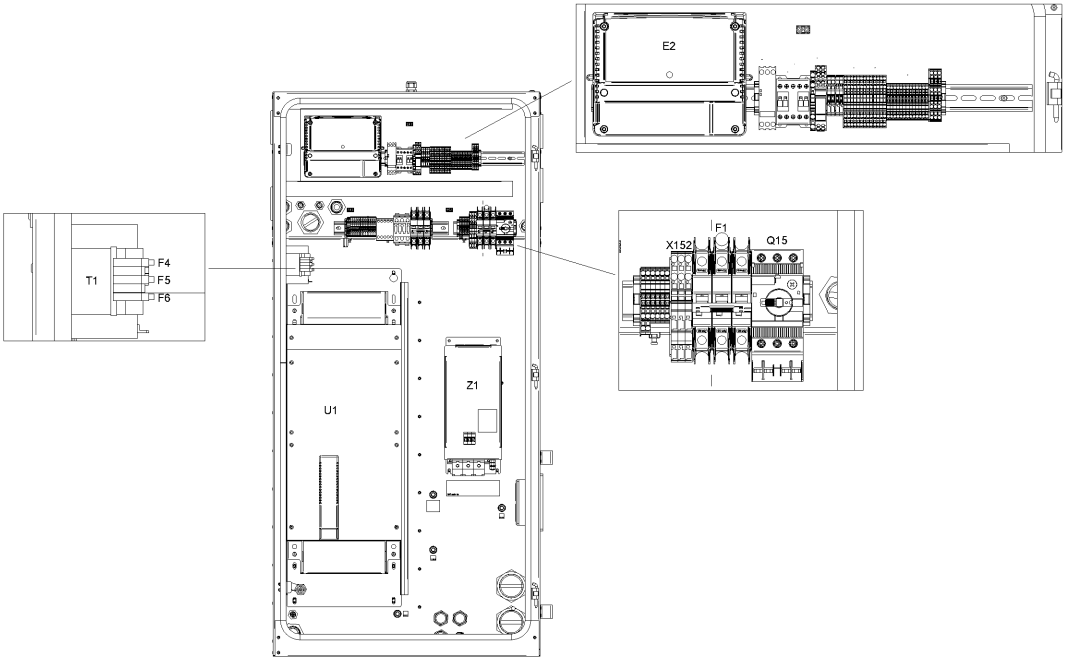
E2
T1
F4
F5
F6
X152
F1
Q15
U1
Z1

26.35 - IT Ancillaries GA 110 VSD+ - 200V-400V-500V/50Hz, 230V-460V-575V/60Hz - Full-Feature (12/12/2018 - 04/02/2020)

((MOVOL:200V , MOVOL:400V , MOVOL:500V) + FREQ:50HZ , (MOVOL:230V , MOVOL:460V , MOVOL:575V) + FREQ:60HZ) + IDRY:Y + MODEL:GA110VP_16

Ref	Part Number	Qty	Name	Validity	EL
	1900 2202 37	1	CUBICLE	(12/12/2018 - 04/02/2020)	
	9820 3000 31	1	ASSEMBLY DRAWING	(12/12/2018 - 04/02/2020)	AD
	9820 3000 27	1	SERVICE DIAGRAM	(12/12/2018 - 04/02/2020)	SD
	1622 3798 72	1	WIRE HARNESS	(12/12/2018 - 04/02/2020)	Comm Cable
	1622 5099 04	1	DI CHANE CABLE (1400MM)	(12/12/2018 - 04/02/2020)	
	Electrical legend:	Comm Cable Loose supply			
	1649 8001 22	1	CUBICLE	(12/12/2018 - 04/02/2020)	-
	1649 8001 31	1	PLATE NEOS "E"	(12/12/2018 - 04/02/2020)	-
	1649 8003 85	1	MOUNTING PLATE	(12/12/2018 - 04/02/2020)	-
	1649 8002 39	1	WIRE HARNESS	(12/12/2018 - 04/02/2020)	-
	1649 8002 40	1	WIRE HARNESS	(12/12/2018 - 04/02/2020)	-
	1649 8002 72	1	CABLE POWER	(12/12/2018 - 04/02/2020)	
	Electrical legend:	Full feature (FF) Drain			
	1649 8002 73	1	WIRE HARNESS	(12/12/2018 - 04/02/2020)	
	Electrical legend:	Pack Drain + Air filter switch			
	1649 8002 75	1	WIRE HARNESS	(12/12/2018 - 04/02/2020)	
	Electrical legend:	Relative Humidity sensor			
	1649 8001 43	3	MOTOR CABLE	(12/12/2018 - 04/02/2020)	-
	1649 8001 46	1	MOTOR CABLE	(12/12/2018 - 04/02/2020)	-
		1	DATA LABEL	(12/12/2018 - 04/02/2020)	-
	1079 9901 68	1	WARNING LABEL	(12/12/2018 - 04/02/2020)	-
	1649 8005 00	-	LABEL	(12/12/2018 - 04/02/2020)	Label
	1900 5350 98	1	INVERTER	(12/12/2018 - 04/02/2020)	U1
	1631 2079 00	1	NANOPERMRING	(12/12/2018 - 04/02/2020)	-
	0697 9811 17	2	PLUG	(12/12/2018 - 04/02/2020)	
	Electrical legend:	Plug for transfo supply			
	0989 3700 48	2	NUT	(12/12/2018 - 04/02/2020)	
	Electrical legend:	Nut for transfo supply			
	0698 5140 72	1	CABLE GLAND	(12/12/2018 - 04/02/2020)	Fan
	0698 5140 71	1	CABLE GLAND	(12/12/2018 - 04/02/2020)	
	Electrical legend:	Ambient sensor			
	0697 9809 20	1	LOCKNUT	(12/12/2018 - 04/02/2020)	
	Electrical legend:	Ambient sensor			
	1089 9556 44	1	FAN WITH FILTER	(12/12/2018 - 04/02/2020)	Cubicle fan
		4	AIR INLET WITHOUT FILTER	(12/12/2018 - 04/02/2020)	-
	Service kits:	2901 9901 02 - PREVENTIVE MAINTENANCE KIT - GA 90 VSD+, GA 110 VSD+ 2901 9900 96 - AIR FILTER KIT - GA 90 VSD+, GA 110 VSD+			
	1088 0032 09	1	CONNECTOR	(12/12/2018 - 04/02/2020)	X3
	1089 9572 04	1	LINE FILTER	(12/12/2018 - 04/02/2020)	Z1 for 110kw
	Electrical legend:	Z1 for 110kw			
	1089 9562 04	1	STRAP	(12/12/2018 - 04/02/2020)	HF-screen
	1089 9514 56	1	TRANSFORMER	(12/12/2018 - 04/02/2020)	T1
	1089 9522 26	1	CIRCUIT BREAKER	(12/12/2018 - 04/02/2020)	F1
	1089 9513 41	1	PUSH BUTTON	(12/12/2018 - 04/02/2020)	S3
	1089 9513 28	1	HOLDER	(12/12/2018 - 04/02/2020)	S3
	~~1089 9513 30~~	4	CONTACTOR	(12/12/2018 - 04/02/2020)	S3
	Substituted by:	1089 9513 04 - CONTACT BLOCK (quantity: 1)			
	1088 0031 02	1	CONNECTOR 2-POLE	(12/12/2018 - 17/02/2019)	
	1088 0039 07	3	TERMINAL	(12/12/2018 - 04/02/2020)	X152
	1088 0039 05	1	PLATE	(12/12/2018 - 04/02/2020)	X152
	1088 0039 26	1	CONNECTOR	(12/12/2018 - 04/02/2020)	
	Electrical legend:	X152 (remove coding pin 1,3)			
	1088 0037 99	4	PIN	(12/12/2018 - 04/02/2020)	X152:1; 3

Legend:

FREQ:50HZ - Frequency:50 Hz
FREQ:60HZ - Frequency:60 Hz
IDRY:Y - Integrated dryer:Yes
MODEL:GA110VP_16 - Model:GA 110VSD+
MOVOL:200V - Supply voltage:200 V
MOVOL:230V - Supply voltage:230 V
MOVOL:400V - Supply voltage:400 V
MOVOL:460V - Supply voltage:460 V
MOVOL:500V - Supply voltage:500 V
MOVOL:575V - Supply voltage:575 V

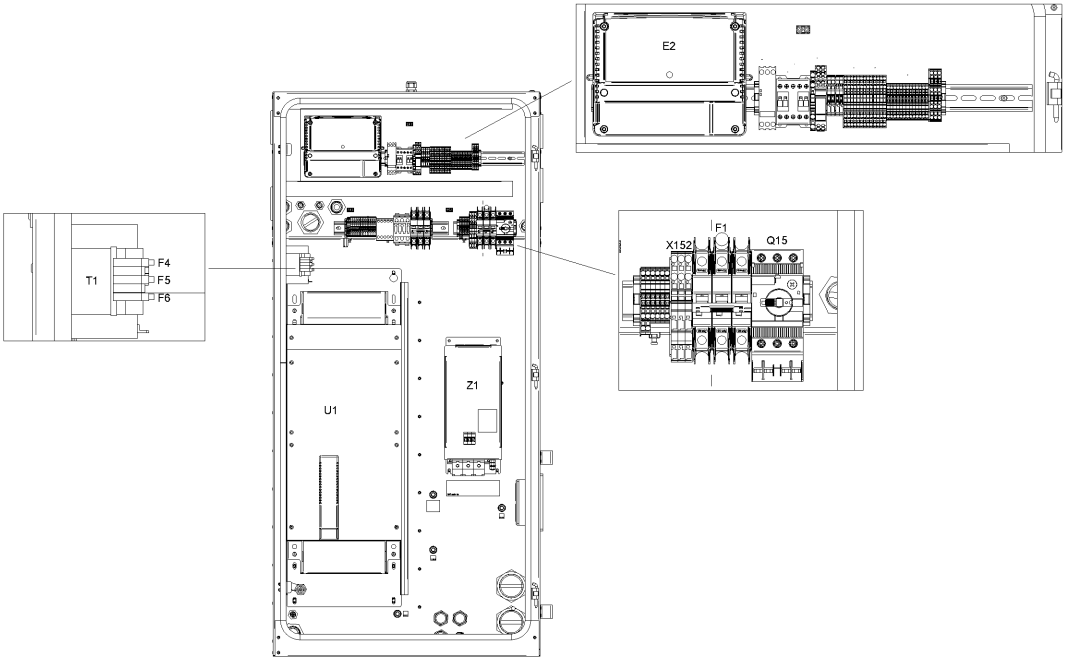
E2
T1
F4
F5
F6
X152
F1
Q15
U1
Z1

26.35 - IT Ancillaries GA 110 VSD+ - 200V-400V-500V/50Hz, 230V-460V-575V/60Hz - Full-Feature (12/12/2018 - 04/02/2020)

((MOVOL:200V , MOVOL:400V , MOVOL:500V) + FREQ:50HZ , (MOVOL:230V , MOVOL:460V , MOVOL:575V) + FREQ:60HZ) + IDRY:Y + MODEL:GA110VP_16

Ref	Part Number	Qty	Name	Validity	EL
	~~1088 0031 81~~	7	END STOP BRACKET 6MM	(12/12/2018 - 04/02/2020)	
	Electrical legend:	Connector/terminal rail			
	Substituted by:	1089 0577 82 - END RETAINER (quantity: 1)			
	1088 0039 38	2	TERMINAL	(12/12/2018 - 04/02/2020)	1X11:2,5
	1088 0039 40	1	PLATE	(12/12/2018 - 04/02/2020)	1X11
	1088 0039 34	4	TERMINAL	(12/12/2018 - 04/02/2020)	
	Electrical legend:	1X11:30,301,34			
	1088 0039 35	1	PLATE	(12/12/2018 - 04/02/2020)	1X11
	1088 0039 04	2	TERMINAL	(12/12/2018 - 04/02/2020)	X104a
	1088 0037 99	2	PIN	(12/12/2018 - 04/02/2020)	X104a/X105
	1088 0039 02	1	PLATE	(12/12/2018 - 04/02/2020)	X104a
	1088 0039 07	2	TERMINAL	(12/12/2018 - 04/02/2020)	X105
	1088 0039 05	1	PLATE	(12/12/2018 - 04/02/2020)	X105
	1088 0039 34	13	TERMINAL	(12/12/2018 - 04/02/2020)	1X6
	1088 0037 69	3	CONNECTOR	(12/12/2018 - 04/02/2020)	1X7
	1088 0039 35	1	PLATE	(12/12/2018 - 04/02/2020)	1X6
	1088 0040 37	1	END PLATE	(12/12/2018 - 04/02/2020)	1X7
	1088 0039 36	9	TERMINAL	(12/12/2018 - 04/02/2020)	1X4
	1088 0039 36	4	TERMINAL	(12/12/2018 - 04/02/2020)	1X6
	1088 0039 37	1	END PLATE	(12/12/2018 - 04/02/2020)	1X4
	1088 0039 37	1	END PLATE	(12/12/2018 - 04/02/2020)	1X6
	1088 0039 37	1	END PLATE	(12/12/2018 - 04/02/2020)	1X1:Y/D
	1088 0037 81	1	CONNECTOR	(12/12/2018 - 04/02/2020)	2X27
	1088 0037 80	1	CONNECTOR	(12/12/2018 - 04/02/2020)	2X28
	1088 0031 32	1	CONNECTOR	(12/12/2018 - 04/02/2020)	2X30
	1088 0031 26	1	CONNECTOR 6-POLE	(12/12/2018 - 04/02/2020)	2X31
	~~1089 9664 06~~	1	SWITCH	(12/12/2018 - 04/02/2020)	Q15
	Substituted by:	1089 9551 97 - AUX.CONTACT CIRCUIT BREAKER (quantity: 1)			
	1089 9551 19	1	CIRCUIT BREAKER	(12/12/2018 - 04/02/2020)	Q15
	1088 0038 26	1	TERMINAL	(12/12/2018 - 04/02/2020)	1X1:Y/D
	1089 9602 79	1	CONTACTOR 110 V	(12/12/2018 - 04/02/2020)	K15
	1089 9461 26	1	PHASE SEQUENCE RELAY	(12/12/2018 - 04/02/2020)	K25
	1088 0032 17	1	RELAY 115 VAC	(12/12/2018 - 04/02/2020)	K5
	0991 8011 21	AR	CABLE TRAY	(12/12/2018 - 04/02/2020)	L=1384mm
	1900 2203 02	1	DRYER RAIL	(12/12/2018 - 04/02/2020)	
	Electrical legend:	Without trafo on dryer			
	1088 0031 13	1	CONNECTOR 13-POLE	(12/12/2018 - 04/02/2020)	1X30
	1088 0037 82	1	CONNECTOR	(12/12/2018 - 04/02/2020)	3X34
	0697 9811 13	1	PLUG	(12/12/2018 - 04/02/2020)	
	Electrical legend:	Energy recovery			
	0989 3700 44	1	LOCKNUT	(12/12/2018 - 04/02/2020)	
	Electrical legend:	Energy recovery			
	0697 9811 12	1	PLUG	(12/12/2018 - 04/02/2020)	
	Electrical legend:	Control circuit of T10			
	0989 3700 43	1	NUT	(12/12/2018 - 04/02/2020)	
	Electrical legend:	Control circuit of T10			
	0697 9811 10	1	PLUG	(12/12/2018 - 04/02/2020)	
	Electrical legend:	Plug for smartbox hole			
	0989 3700 41	1	LOCKNUT	(12/12/2018 - 04/02/2020)	
	Electrical legend:	Nut for smartbox hole			

Legend:

FREQ:50HZ - Frequency:50 Hz
FREQ:60HZ - Frequency:60 Hz
IDRY:Y - Integrated dryer:Yes
MODEL:GA110VP_16 - Model:GA 110VSD+
MOVOL:200V - Supply voltage:200 V
MOVOL:230V - Supply voltage:230 V
MOVOL:400V - Supply voltage:400 V
MOVOL:460V - Supply voltage:460 V
MOVOL:500V - Supply voltage:500 V
MOVOL:575V - Supply voltage:575 V

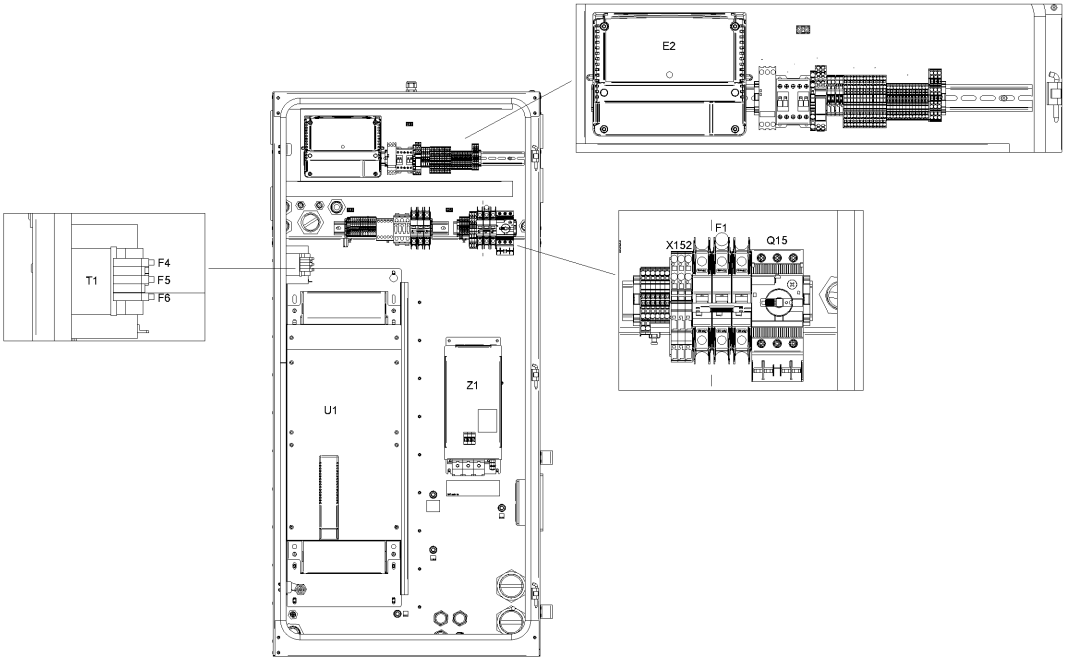
E2
T1
F4
F5
F6
X152
F1
Q15
U1
Z1

26.36 - IT Ancillaries GA 110 VSD+ - 200V-400V-500V/50Hz, 230V-460V-575V/60Hz - Full-Feature (05/02/2020 - ...)

((MOVOL:200V , MOVOL:400V , MOVOL:500V) + FREQ:50HZ , (MOVOL:230V , MOVOL:460V , MOVOL:575V) + FREQ:60HZ) + IDRY:Y + MODEL:GA110VP_16

Ref	Part Number	Qty	Name	Validity	EL
	1900 2202 57	1	CUBICLE	(05/02/2020 - ...)	
	9820 3000 31	1	ASSEMBLY DRAWING	(05/02/2020 - ...)	AD
	9820 3000 27	1	SERVICE DIAGRAM	(05/02/2020 - ...)	SD
	1622 3798 72	1	WIRE HARNESS	(05/02/2020 - ...)	Comm Cable
	1622 5099 04	1	DI CHANE CABLE (1400MM)	(05/02/2020 - ...)	
	Electrical legend:	Comm Cable Loose supply			
	1649 8006 00	1	CUBICLE	(05/02/2020 - ...)	MSA
	1649 8001 31	1	PLATE NEOS "E"	(05/02/2020 - ...)	
	Electrical legend:	Mounting plate			
	1649 8003 85	1	MOUNTING PLATE	(05/02/2020 - ...)	
	Electrical legend:	Mounting plate			
	1649 8002 39	1	WIRE HARNESS	(05/02/2020 - ...)	WH
	1649 8002 40	1	WIRE HARNESS	(05/02/2020 - ...)	WH
	1649 8002 72	1	CABLE POWER	(05/02/2020 - ...)	
	Electrical legend:	Full feature (FF) Drain			
	1649 8002 73	1	WIRE HARNESS	(05/02/2020 - ...)	
	Electrical legend:	Pack Drain + Air filter switch			
	1649 8002 75	1	WIRE HARNESS	(05/02/2020 - ...)	
	Electrical legend:	Relative Humidity sensor			
	1649 8001 43	3	MOTOR CABLE	(05/02/2020 - ...)	
	Electrical legend:	Motor conduit			
	1649 8001 46	1	MOTOR CABLE	(05/02/2020 - ...)	
	Electrical legend:	Motor conduit			
	1625 3906 31	1	DATA LABEL	(05/02/2020 - ...)	Label
	1079 9901 68	1	WARNING LABEL	(05/02/2020 - ...)	Label
	1649 8005 00	0	LABEL	(05/02/2020 - ...)	Label
	1900 5350 98	1	INVERTER	(05/02/2020 - ...)	U1
	1631 2079 00	1	NANOPERMRING	(05/02/2020 - ...)	
	Electrical legend:	Nanoperm ring			
	0697 9811 17	2	PLUG	(05/02/2020 - ...)	
	Electrical legend:	Plug for transfo supply			
	0989 3700 48	2	NUT	(05/02/2020 - ...)	
	Electrical legend:	Nut for transfo supply			
	0698 5140 72	1	CABLE GLAND	(05/02/2020 - ...)	Fan
	0698 5140 71	1	CABLE GLAND	(05/02/2020 - ...)	
	Electrical legend:	Ambient sensor			
	0697 9809 20	1	LOCKNUT	(05/02/2020 - ...)	
	Electrical legend:	Ambient sensor			
	1089 9556 44	1	FAN WITH FILTER	(05/02/2020 - ...)	Cubicle fan
	1089 9556 72	4	AIR INLET WITHOUT FILTER	(05/02/2020 - ...)	Filter grid
	1088 0032 09	1	CONNECTOR	(05/02/2020 - ...)	X3
	1089 9572 04	1	LINE FILTER	(05/02/2020 - ...)	Z1 for 110kw
	Electrical legend:	Z1 for 110kw			
	1089 9562 04	1	STRAP	(05/02/2020 - ...)	HF-screen
	1089 9514 56	1	TRANSFORMER VOLTAGE	(05/02/2020 - ...)	T1
	1089 9522 26	1	CIRCUIT BREAKER	(05/02/2020 - ...)	F1
	1089 9513 41	1	PUSH BUTTON	(05/02/2020 - ...)	S3
	1089 9513 28	1	HOLDER	(05/02/2020 - ...)	S3
	~~1089 9513 30~~	4	CONTACTOR	(05/02/2020 - ...)	S3
	Substituted by:	1089 9513 04 - CONTACT BLOCK (quantity: 1)			
	1088 0039 07	3	TERMINAL	(05/02/2020 - ...)	X152
	1088 0039 05	1	PLATE	(05/02/2020 - ...)	X152
	1088 0039 26	1	CONNECTOR	(05/02/2020 - ...)	
	Electrical legend:	X152 (remove coding pin 1,3)			

Legend:

FREQ:50HZ - Frequency:50 Hz
FREQ:60HZ - Frequency:60 Hz
IDRY:Y - Integrated dryer:Yes
MODEL:GA110VP_16 - Model:GA 110VSD+
MOVOL:200V - Supply voltage:200 V
MOVOL:230V - Supply voltage:230 V
MOVOL:400V - Supply voltage:400 V
MOVOL:460V - Supply voltage:460 V
MOVOL:500V - Supply voltage:500 V
MOVOL:575V - Supply voltage:575 V

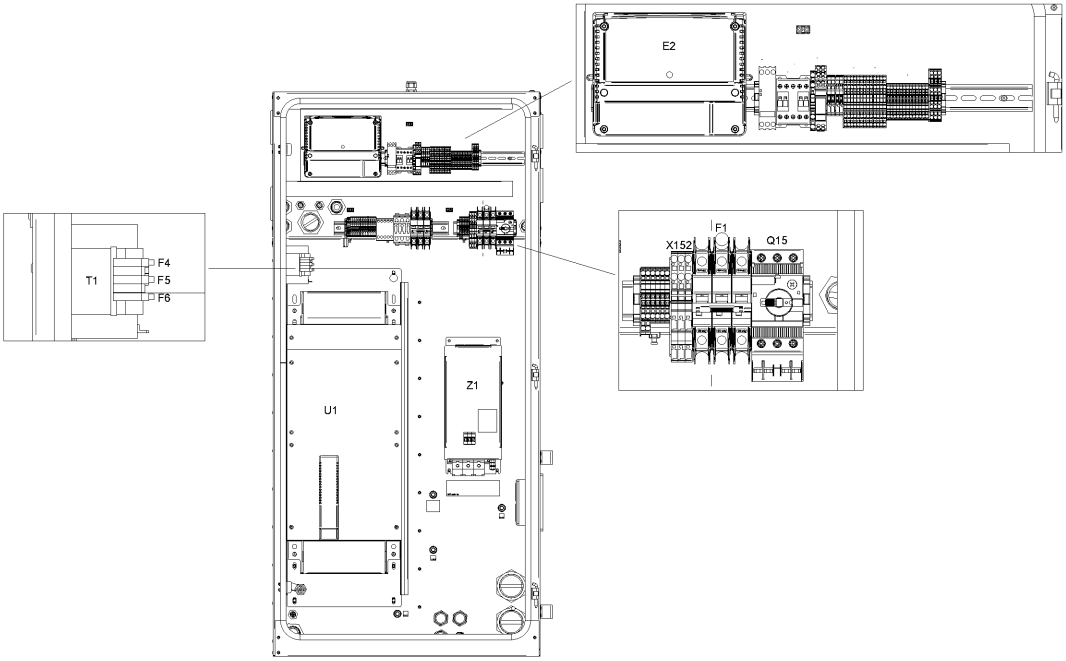
E2
T1
F4
F5
F6
X152
F1
Q15
U1
Z1

Ref	Part Number	Qty	Name	Validity	EL
	1088 0037 99	4	PIN	(05/02/2020 - ...)	X152:1; 3
	~~1088 0031 81~~	7	END STOP BRACKET 6MM	(05/02/2020 - ...)	
	Electrical legend:	Connector/terminal rail			
	Substituted by:	1089 0577 82 - END RETAINER (quantity: 1)			
	1088 0039 38	2	TERMINAL	(05/02/2020 - ...)	1X11:2,5
	1088 0039 40	1	PLATE	(05/02/2020 - ...)	1X11
	1088 0039 34	4	TERMINAL	(05/02/2020 - ...)	
	Electrical legend:	1X11:30,301,34			
	1088 0039 35	1	PLATE	(05/02/2020 - ...)	1X11
	1088 0039 04	2	TERMINAL	(05/02/2020 - ...)	X104a
	1088 0037 99	2	PIN	(05/02/2020 - ...)	X104a/X105
	1088 0039 02	1	PLATE	(05/02/2020 - ...)	X104a
	1088 0039 07	2	TERMINAL	(05/02/2020 - ...)	X105
	1088 0039 05	1	PLATE	(05/02/2020 - ...)	X105
	1088 0039 34	13	TERMINAL	(05/02/2020 - ...)	1X6
	1088 0037 69	3	CONNECTOR	(05/02/2020 - ...)	1X7
	1088 0039 35	1	PLATE	(05/02/2020 - ...)	1X6
	1088 0040 37	1	END PLATE	(05/02/2020 - ...)	1X7
	1088 0039 36	9	TERMINAL	(05/02/2020 - ...)	1X4
	1088 0039 36	4	TERMINAL	(05/02/2020 - ...)	1X6
	1088 0039 37	1	END PLATE	(05/02/2020 - ...)	1X4
	1088 0039 37	1	END PLATE	(05/02/2020 - ...)	1X6
	1088 0039 37	1	END PLATE	(05/02/2020 - ...)	1X1:Y/D
	1088 0037 81	1	CONNECTOR	(05/02/2020 - ...)	2X27
	1088 0037 80	1	CONNECTOR	(05/02/2020 - ...)	2X28
	1088 0031 32	1	CONNECTOR	(05/02/2020 - ...)	2X30
	1088 0031 26	1	CONNECTOR 6-POLE	(05/02/2020 - ...)	2X31
	~~1089 9664 06~~	1	SWITCH	(05/02/2020 - ...)	Q15
	Substituted by:	1089 9551 97 - AUX.CONTACT CIRCUIT BREAKER (quantity: 1)			
	1089 9551 19	1	CIRCUIT BREAKER	(05/02/2020 - ...)	Q15
	1088 0038 26	1	TERMINAL	(05/02/2020 - ...)	1X1:Y/D
	1089 9602 79	1	CONTACTOR 110 V	(05/02/2020 - ...)	K15
	1089 9461 26	1	PHASE SEQUENCE RELAY	(05/02/2020 - ...)	K25
	1088 0032 17	1	RELAY 115 VAC	(05/02/2020 - ...)	K5
	0991 8011 21	AR	CABLE TRAY	(05/02/2020 - ...)	L=1384mm
	1900 2203 02	1	DRYER RAIL	(05/02/2020 - ...)	
	Electrical legend:	Without trafo on dryer			
	1088 0031 13	1	CONNECTOR 13-POLE	(05/02/2020 - ...)	1X30
	1088 0037 82	1	CONNECTOR	(05/02/2020 - ...)	3X34
	0697 9811 13	1	PLUG	(05/02/2020 - ...)	
	Electrical legend:	Energy recovery			
	0989 3700 44	1	LOCKNUT	(05/02/2020 - ...)	
	Electrical legend:	Energy recovery			
	0697 9811 12	1	PLUG	(05/02/2020 - ...)	
	Electrical legend:	Control circuit of T10			
	0989 3700 43	1	NUT	(05/02/2020 - ...)	
	Electrical legend:	Control circuit of T10			
	0697 9811 10	1	PLUG	(05/02/2020 - ...)	
	Electrical legend:	Plug for smartbox hole			
	0989 3700 41	1	LOCKNUT	(05/02/2020 - ...)	
	Electrical legend:	Nut for smartbox hole			
	1089 9556 37	1	AIR INLET WITH FILTER	(05/02/2020 - ...)	Fan Filter

Legend:

FREQ:50HZ - Frequency:50 Hz
FREQ:60HZ - Frequency:60 Hz
IDRY:Y - Integrated dryer:Yes
MODEL:GA110VP_16 - Model:GA 110VSD+
MOVOL:200V - Supply voltage:200 V
MOVOL:230V - Supply voltage:230 V
MOVOL:400V - Supply voltage:400 V
MOVOL:460V - Supply voltage:460 V
MOVOL:500V - Supply voltage:500 V
MOVOL:575V - Supply voltage:575 V

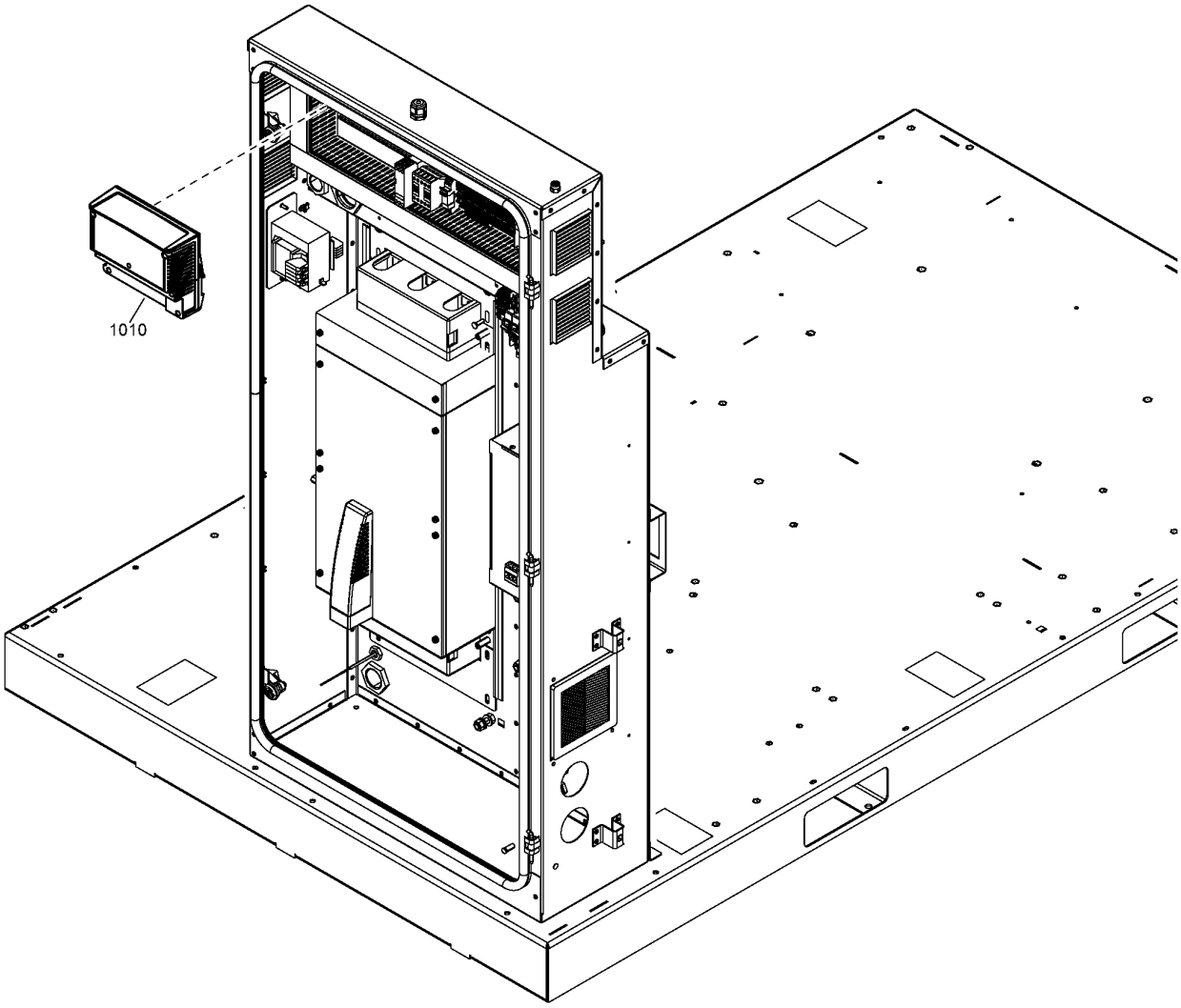
1010

Ref	Part Number	Qty	Name	Validity
	8092 3760 30	1	STANDARD OPTION - MK5 EXPANSION MODULE	
1010	1900 5200 42	1	I/O 34 MODULE	(17/10/2017 - ...)

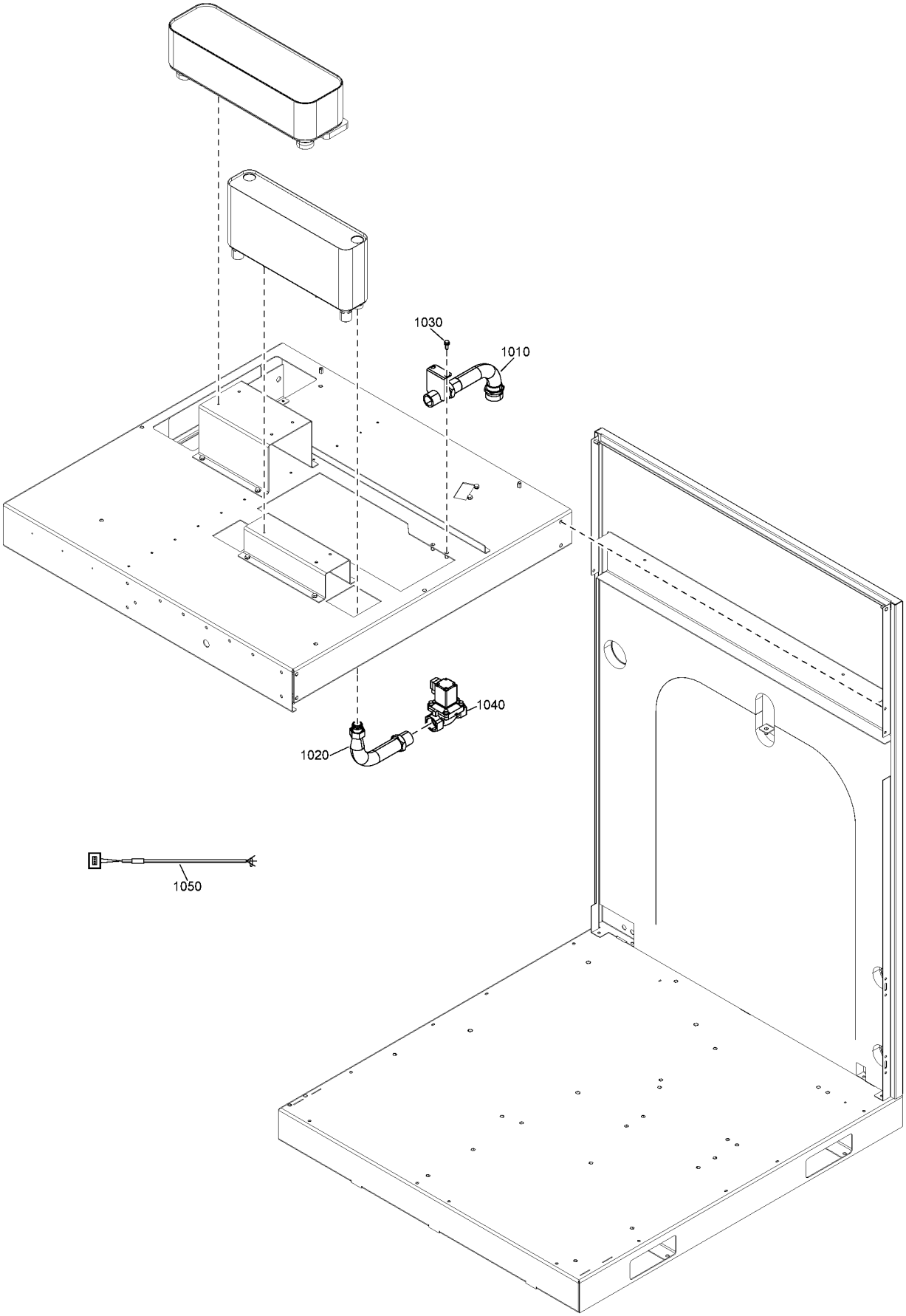
1030
1010
1040
1020
1050

Ref	Part Number	Qty	Name	Validity
1010	1649 8004 66	1	PIPE	**(30/11/2018 - ...)**
1020	1649 8004 65	1	PIPE	**(30/11/2018 - ...)**
1030	0147 1963 08	2	HEXAGON BOLT	**(30/11/2018 - ...)**
1040	1089 9266 11	1	SOLENOID VALVE	**(30/11/2018 - ...)** FREQ:50HZ
1040	1089 9266 12	1	SOLENOID VALVE	**(30/11/2018 - ...)** FREQ:60HZ
1050	1622 1295 05	1	CABLE SOLENOID VALVE	**(03/01/2020 - ...)**

Legend:

FREQ:50HZ - Frequency:50 Hz

FREQ:60HZ - Frequency:60 Hz

ORIGINAL PART

In order to be First in Mind—First in Choice® for all your quality compressed air needs, Atlas Copco delivers the products and services that help to increase your business' efficiency and profitability.

Atlas Copco's pursuit of innovation never ceases, driven by our need for reliability and efficiency. Always working with you, we are committed to providing you the customized quality air solution that is the driving force behind your business.

13/02/2020
No. 2930 7150 43
www.atlascopco.com