SCHEMA NR 2

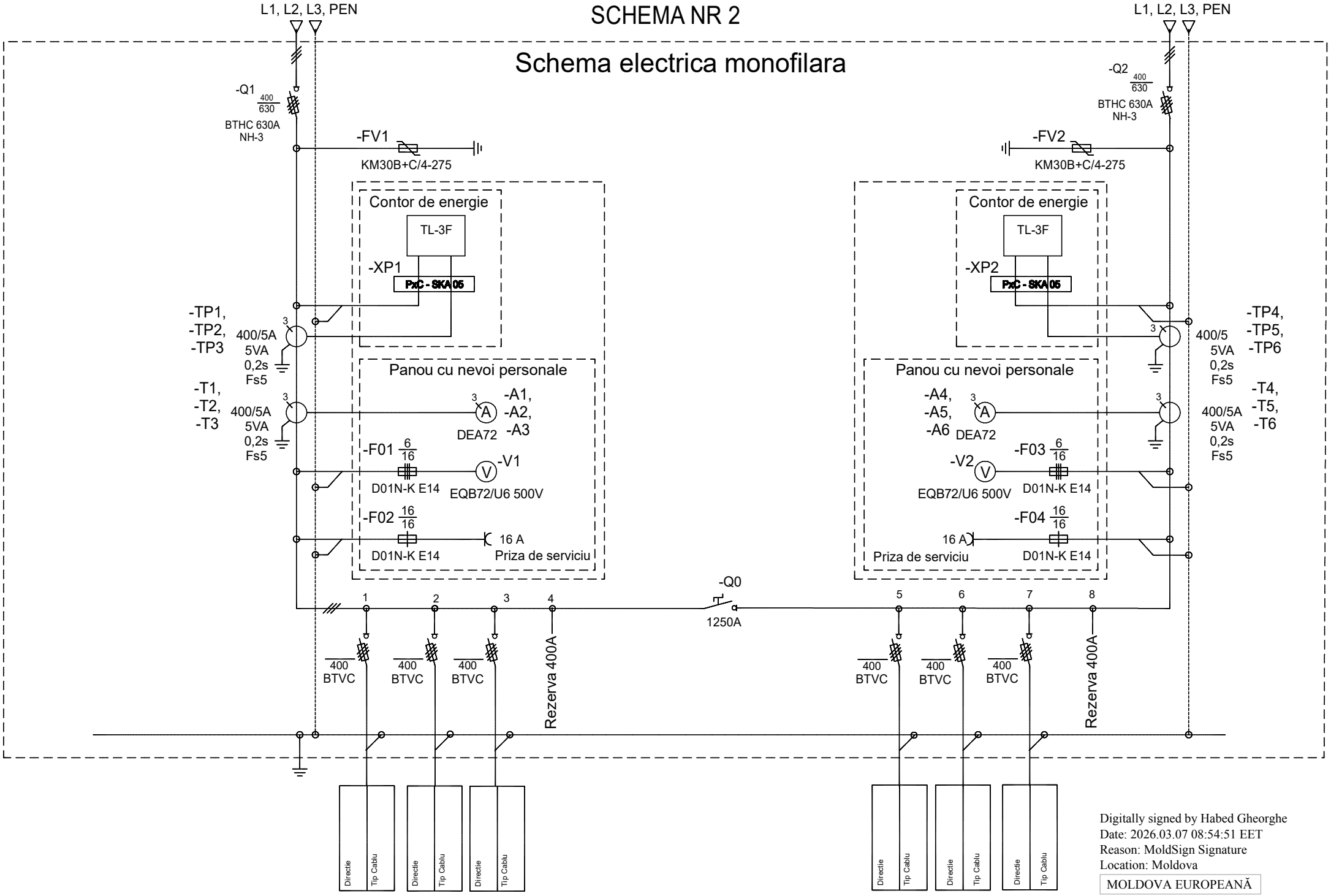

Digitally signed by Habed Gheorghe
Date: 2026.03.07 08:54:51 EET
Reason: MoldSign Signature
Location: Moldova

MOLDOVA EUROPEANĂ