Digitally signed by Postolachi Veaceslav
Date: 2021.09.06 19:52:50 MSK
Reason: MoldSign Signature
Location: Moldova

CERTIFICAT
DE CALITATE SI GARANTIE

Tip produs: Street Light LEAF-2 50W

Data: 01.08.2021

Prezentul certificat atesta calitatea produsului livrat si conformitatea acestuia cu standardele internationale corespunzatoare clasei in care se incadreaza.

Produsul beneficiaza de garantie, suport tehnic si service gratuit pe o perioada de 5 **ani** de la data instalarii lui.In perioada de garantie cumparatorul are dreptul in mod gratuit la repararea produsului si inlocuirea pieselor sau subansamblelor defecte din vina producatorului.

Prezentul produs are în componenta subansamble electronice si mecanice care necesita o manipulare adecvata pentru a se evita deteriorarile mecanice sub neglijenta instalaorului si conectare incorecta a alimentarii electrice. Temperatura ambianta de functionare trebuie sa se incadreze intre -20-+40°C.

Pentru a beneficia de garantie, cumparatorul are urmatoarele obligatii:
-Sa respecte conditiile enumerate mai sus si sa foloseasca produsul conform instructiunilor de utilizare;
-Sa pastreze produsul în bune conditii
-La aparitia unei situatii anormale in functionarea echipamentului sa anunte agentul de service care il deserveste, dupa ce verifica daca sunt indeplinite conditiile de utilizare; este interzisa interventia asupra produsului a persoanelor neautorizate de firma ***"Led Market" S.R.L***. -Sa pastreze cu grija prezentul certificat de garantie

Nerespectarea obligatiilor de mai sus atrage pierderea garantiei.
De la garantie sunt excluse:
- partile de natura consumabila
- defectele cauzate de suprasarcini, intreruperi sau conectarea incorecta a alimentarii electrice
- defectele datorate conectarii gresite a accesoriilor optionale

Am prezentat modul de utilizare si conditiile de garantie,

_____

Am luat la cunostinta,

Delegat _____

Societate Comercila

_____

Stampila

Stampila

LUMINOUS DISTRIBUTION INTENSITY DATA

Test:U:221.6V I:0.2440A P:52.10W PF:0.9620 Lamp Flux:5789.8x1 lm		
NAME: LEAF RANGE	TYPE:50W	WEIGHT:1.7
DIM.:	SPEC.:5700K	SERIAL No.:
MFR.: LED MARKET SRL	SUR.:	PROTECTION ANGLE:

Table--1 UNIT: cd/klm

g (DEG) \ C(DEG)	0	5	10	15	20	25	30	35	40	45	50	55	60	65	70	75	80	85	90
0	238	238	238	238	238	238	238	238	238	238	238	238	238	238	238	238	238	238	238
5	240	239	237	236	235	234	232	231	230	229	228	227	226	225	225	224	224	224	224
10	242	239	236	234	231	228	225	223	221	219	217	215	214	213	212	210	210	209	209
15	248	243	239	235	230	226	222	218	214	211	208	204	201	199	198	197	195	195	194
20	263	256	250	243	236	229	222	215	209	203	196	190	184	177	173	170	167	166	165
25	287	279	270	260	249	238	226	216	201	188	176	166	158	152	146	141	138	136	135
30	311	302	291	280	266	252	235	213	192	172	157	144	133	125	119	113	109	107	106
35	335	324	312	299	284	264	239	212	186	161	138	121	113	108	105	102	100	99.6	99.3
40	345	335	323	310	294	269	241	213	183	153	132	115	106	100	96.6	95.0	93.2	92.7	92.7
45	357	346	333	319	297	272	246	213	181	152	127	110	98.1	92.3	87.6	87.1	85.7	85.7	86.1
50	370	358	345	326	301	273	243	211	177	144	118	99.7	94.8	98.0	101	103	105	105	105
55	396	385	369	344	312	277	238	201	166	135	120	116	119	123	128	126	127	126	125
60	445	438	422	390	349	303	242	190	169	149	135	135	140	148	154	149	150	146	144
65	491	485	480	444	407	350	272	205	179	159	145	143	136	131	124	112	106	99.6	97.2
70	468	455	434	431	402	324	243	210	194	141	106	89.2	81.6	75.9	69.2	61.6	56.3	52.0	50.4
75	174	207	239	307	256	196	159	117	99.2	68.9	47.7	34.5	26.8	20.3	15.1	10.4	6.17	4.33	3.65
80	14.4	19.0	19.9	34.8	57.3	83.0	52.5	31.6	9.97	4.11	3.08	2.40	1.69	1.10	0.72	0.37	0.12	0.03	0.00
85	4.04	5.07	5.62	5.53	6.10	3.01	0.00	0.00	0.00	0.00	0.00	0.00	0.00	0.00	0.00	0.00	0.00	0.00	0.00
90	0.93	0.00	0.00	0.00	0.00	0.00	0.00	0.00	0.00	0.00	0.00	0.00	0.00	0.00	0.00	0.00	0.00	0.00	0.00

C Range: 0 - 360DEG
C Interval: 5.0DEG
Test Speed: HIGH
Temperature:22DEG
Test Date:2019-03-21

g Range: 0 - 90DEG
g Interval: 0.5DEG
Test System:EVERFINE GO-2000A_V1 SYSTEM V2.0.269
Humidity:65.0%
Test Distance:8.000m [K=1.0000]
Remarks:

LUMINOUS DISTRIBUTION INTENSITY DATA

Test:U:221.6V I:0.2440A P:52.10W PF:0.9620 Lamp Flux:5789.8x1 lm		
NAME: LEAF RANGE	TYPE:50W	WEIGHT:1.7
DIM.:	SPEC.:5700K	SERIAL No.:
MFR.: LED MARKET SRL	SUR.:	PROTECTION ANGLE:

Table--2 UNIT: cd/klm

C(DEG) / g (DEG)	95	100	105	110	115	120	125	130	135	140	145	150	155	160	165	170	175	180	185
0	238	238	238	238	238	238	238	238	238	238	238	238	238	238	238	238	238	238	238
5	224	225	225	226	227	228	229	230	231	232	233	234	235	236	238	239	240	242	241
10	210	211	212	213	214	215	217	219	221	224	227	229	232	235	238	241	244	247	247
15	195	197	197	198	200	203	206	210	213	217	221	226	231	235	240	245	250	255	254
20	166	168	170	174	179	184	191	198	205	211	218	226	234	242	250	257	265	272	271
25	136	138	142	147	153	160	168	179	191	204	219	230	242	254	264	274	284	292	291
30	106	110	114	120	127	136	147	160	177	196	217	236	252	264	275	286	296	306	305
35	99.5	102	104	107	111	117	126	144	166	190	212	233	253	270	283	295	307	317	316
40	92.9	94.7	96.8	99.9	105	111	121	137	158	182	206	230	253	275	289	302	314	325	325
45	86.4	87.7	89.3	92.9	96.5	103	114	131	151	175	202	226	250	277	304	320	335	348	347
50	105	104	102	101	98.8	97.5	101	117	140	168	194	226	259	295	332	360	380	394	391
55	124	122	120	118	116	114	111	118	129	156	194	241	292	344	380	405	419	431	425
60	142	141	137	135	134	128	125	130	140	156	213	271	319	374	397	437	443	455	443
65	97.2	98.9	101	107	117	120	135	136	142	150	200	250	319	389	459	463	478	491	472
70	50.6	52.2	54.6	59.8	67.0	70.9	84.3	95.5	102	97.7	118	178	243	284	302	303	314	275	274
75	3.99	5.45	8.10	11.8	17.0	22.7	31.6	42.8	49.7	59.2	68.9	69.4	94.8	94.9	75.3	50.4	42.3	39.0	40.4
80	0.03	0.10	0.24	0.43	0.71	1.14	1.67	2.42	3.02	5.34	13.3	17.6	9.58	9.04	10.0	8.12	6.87	6.80	6.96
85	0.00	0.00	0.00	0.00	0.00	0.00	0.00	0.00	0.00	0.00	0.00	0.00	0.79	1.94	2.57	2.33	2.40	2.48	2.56
90	0.00	0.00	0.00	0.00	0.00	0.00	0.00	0.00	0.00	0.00	0.00	0.00	0.00	0.00	0.00	0.00	0.00	1.08	0.00

C Range: 0 - 360DEG
C Interval: 5.0DEG
Test Speed: HIGH
Temperature:22DEG
Test Date:2019-03-21

g Range: 0 - 90DEG
g Interval: 0.5DEG
Test System:EVERFINE GO-2000A_V1 SYSTEM V2.0.269
Humidity:65.0%
Test Distance:8.000m [K=1.0000]
Remarks:

LUMINOUS DISTRIBUTION INTENSITY DATA

Test:U:221.6V I:0.2440A P:52.10W PF:0.9620 Lamp Flux:5789.8x1 lm		
NAME: LEAF RANGE	TYPE:50W	WEIGHT:1.7
DIM.:	SPEC.:5700K	SERIAL No.:
MFR.: LED MARKET SRL	SUR.:	PROTECTION ANGLE:

Table--3 UNIT: cd/klm

g (DEG) \ C(DEG)	190	195	200	205	210	215	220	225	230	235	240	245	250	255	260	265	270	275	280
0	238	238	238	238	238	238	238	238	238	238	238	238	238	238	238	238	238	238	238
5	241	241	241	241	241	241	241	240	240	240	239	239	238	238	238	237	237	237	237
10	246	246	245	244	243	243	242	241	240	239	239	239	238	238	237	236	235	235	236
15	254	253	252	250	249	247	246	244	243	241	239	238	237	237	236	234	233	234	234
20	270	268	265	262	259	256	253	249	245	238	232	227	223	221	219	217	215	216	217
25	289	286	283	278	274	269	257	246	236	227	219	212	207	203	200	198	198	198	199
30	303	300	297	294	286	272	256	242	229	217	206	198	190	185	182	179	180	180	181
35	314	311	308	299	285	270	256	240	222	207	193	183	175	169	166	163	163	163	165
40	323	322	316	301	285	267	251	233	212	192	178	166	159	153	150	148	147	147	148
45	344	338	321	301	283	267	239	214	193	174	158	148	140	136	133	132	131	131	132
50	382	365	338	311	285	247	217	191	168	150	142	141	144	147	149	152	154	154	151
55	419	395	364	329	277	231	193	163	157	153	150	152	158	164	168	173	176	177	172
60	425	395	366	303	261	217	177	164	160	156	158	160	171	180	187	193	199	200	193
65	452	395	305	254	202	176	153	148	159	153	145	137	136	135	133	133	136	139	140
70	253	221	155	140	117	103	105	106	108	99.8	92.8	87.0	82.9	79.1	74.0	71.8	73.7	76.9	81.1
75	32.8	24.4	26.9	28.8	19.0	44.6	50.0	51.2	45.7	42.7	39.6	36.6	30.3	23.0	15.1	10.6	10.9	14.8	23.4
80	6.06	5.13	4.64	4.49	5.31	9.08	4.94	3.28	3.25	4.98	5.52	4.57	2.69	1.22	0.38	0.07	0.00	0.11	0.64
85	3.86	3.39	2.74	1.05	0.00	0.00	0.00	0.00	0.00	0.00	0.00	0.00	0.00	0.00	0.00	0.00	0.00	0.00	0.00
90	0.00	0.00	0.00	0.00	0.00	0.00	0.00	0.00	0.00	0.00	0.00	0.00	0.00	0.00	0.00	0.00	0.00	0.00	0.00

C Range: 0 - 360DEG
C Interval: 5.0DEG
Test Speed: HIGH
Temperature:22DEG
Test Date:2019-03-21

g Range: 0 - 90DEG
g Interval: 0.5DEG
Test System:EVERFINE GO-2000A_V1 SYSTEM V2.0.269
Humidity:65.0%
Test Distance:8.000m [K=1.0000]
Remarks:

LUMINOUS DISTRIBUTION INTENSITY DATA

Test:U:221.6V I:0.2440A P:52.10W PF:0.9620 Lamp Flux:5789.8x1 lm		
NAME: LEAF RANGE	TYPE:50W	WEIGHT:1.7
DIM.:	SPEC.:5700K	SERIAL No.:
MFR.: LED MARKET SRL	SUR.:	PROTECTION ANGLE:

Table--4 UNIT: cd/klm

C(DEG) / g (DEG)	285	290	295	300	305	310	315	320	325	330	335	340	345	350	355				
0	238	238	238	238	238	238	238	238	238	238	238	238	238	238	238				
5	237	237	237	237	238	238	238	238	239	239	239	239	239	240	240				
10	236	236	236	237	237	237	237	237	238	238	239	239	240	241	241				
15	234	234	235	235	235	237	238	239	240	242	243	244	245	246	247				
20	218	220	223	227	231	237	241	244	248	251	254	256	258	260	262				
25	201	204	208	214	220	229	239	249	260	267	272	277	281	284	286				
30	184	188	194	201	212	223	237	253	268	283	293	299	304	307	310				
35	168	173	179	190	205	221	239	258	276	292	308	320	326	330	333				
40	151	156	164	176	192	213	240	262	282	301	317	331	338	342	344				
45	135	139	146	157	174	197	224	255	286	303	320	336	349	353	355				
50	146	142	141	142	152	175	204	233	265	301	322	338	355	364	368				
55	164	157	154	153	156	165	177	205	239	276	317	343	365	386	393				
60	179	171	165	161	159	165	174	188	208	259	310	355	393	424	441				
65	139	145	146	149	155	159	167	174	192	245	292	344	414	448	478				
70	90.0	102	100	98.9	106	117	134	139	142	169	212	261	321	401	431				
75	42.5	58.9	53.4	50.2	57.0	64.2	67.9	72.8	78.1	71.9	87.2	99.0	111	168	193				
80	2.69	6.43	8.02	9.41	13.4	14.6	6.83	8.37	18.1	24.8	10.1	12.0	9.38	11.4	14.8				
85	0.00	0.00	0.00	0.00	0.00	0.00	0.00	0.00	0.00	0.00	1.19	3.28	4.13	4.78	4.18				
90	0.00	0.00	0.00	0.00	0.00	0.00	0.00	0.00	0.00	0.00	0.00	0.00	0.00	0.00	0.00				

C Range: 0 - 360DEG
C Interval: 5.0DEG
Test Speed: HIGH
Temperature:22DEG
Test Date:2019-03-21

g Range: 0 - 90DEG
g Interval: 0.5DEG
Test System:EVERFINE GO-2000A_V1 SYSTEM V2.0.269
Humidity:65.0%
Test Distance:8.000m [K=1.0000]
Remarks:

Certificate of Conformity

Certificate No. : ECT2017E03074-Y3

Applicant : SC "LED MARKET" SRL

: Moldova, mun.Chisinau, bd. Moscova 14/1, ap.143

Manufacturer : SC "LED MARKET" SRL

: Moldova, mun.Chisinau, bd. Moscova 14/1, ap.143

Product : LED Street light

Trade Name : GRUNLED

Model : Street LEAF range: 30W,50W,60W,80W,100W,120W,150W
Street FUSION range: 19W, 34W,36W, 65W,42W, 51W,55W, 62W,70W, 90W,104W, 135W, 125W, 150W, 180W, 165W

Test Standards : EN 55015:2013+A1:2015
EN 61547:2009
EN 61000-3-2:2014
EN 61000-3-3:2013

The EUT described above has been tested by us with the listed standards and found in compliance with the council **EMC** directive 2014/30/EU. It is possible to use CE marking to demonstrate the compliance with this **EMC** directive.

CE

SHENZHEN ECT TESTING TECHNOLOGY CO., LTD. APPROVED

(Manager)

Date .: Mar .28 .2017

The results in this report are applicable only to the equipment tested. This report shall not be re-produced except in full without the written approval of Shenzhen ECT Testing Technology Co., Ltd

Shenzhen ECT Testing Technology Co., Ltd

Room 1106,Era Innovation Center, Xixiang gushu second road,Baoan district, Shenzhen city, China

Tel: +86-755-23062275 Fax: +86-755-26609102 http://www.ECT-LAB.com

QuayAudit

CERTIFICAT DE INREGISTRARE

Acest certificat confirma faptul că sistemul de management al

"LED MARKET" SRL

MD-2029, șos. Muncești, nr. 801, mun. Chișinău,
Republica Moldova

a fost auditat și aprobat de către
Quay Audit UK Ltd pentru următorul standard de management :

BS EN ISO 14001:2015

Sistemul de management aprobat se aplică pentru urmatoarele domenii de activitate:

Producerea și comercializarea produselor de iluminat de tip LED

Acest certificat se aplica pentru acele domenii de activitate descrise
în Codurile NACE(CAEN) enumerate mai jos, recunoscute internaţional:

2740 & 4759

Aprobat initial la	**25 Aprilie 2019**
Certificare initiala la	**25 Aprilie 2019**
Certificatul expira la	**25 Aprilie 2022**
Numarul certificatului	**4156667**

REGISTERED MANAGEMENT SYSTEMS BS EN ISO 14001:2015
QUAY AUDIT UK LTD

ASCB Accreditation Services Worldwide

În numele **Quay Audit UK Limited**

www.ascb.com

www.global-accreditation.org

www.irqao.com

Acesta este un certificate acreditat si autorizat pentru emitere de catre Accreditation Service for Certifying Bodies (Europe) Limited, evaluat de catre Quay Audit UK Limited in conformitate cu ISO 17021: 2006 "Evaluarea conformitatii. Cerinte pentru organisme care efectueaza audit si certificare de sisteme de management". Acest certificat este valabil numai atunci când este inscris in registrul International Register of Quality Assessed Organisations: www.irqao.com

Grove House 8 St. Julian's Friars Shrewsbury Shropshire SY1 1XL | (44)1743 351677 | post@quayaudit.co.uk | www.quayaudit.co.uk

QuayAudit

CERTIFICAT DE INREGISTRARE

Acest certificat confirma faptul că sistemul de management al

"LED MARKET" SRL

MD-2029, șos. Muncești, nr. 801, mun. Chișinău,
Republica Moldova

a fost auditat și aprobat de către
Quay Audit UK Ltd pentru următorul standard de management :

BS EN ISO 9001:2015

Sistemul de management aprobat se aplică pentru urmatoarele domenii de activitate:

Producerea și comercializarea produselor de iluminat de tip LED

Acest certificat se aplica pentru acele domenii de activitate descrise
în Codurile NACE(CAEN) enumerate mai jos, recunoscute internaţional:

2740 & 4759

Aprobat initial la	**25 Aprilie 2019**
Certificare initiala la	**25 Aprilie 2019**
Certificatul expira la	**25 Aprilie 2022**
Numarul certificatului	**4156666**

REGISTERED MANAGEMENT SYSTEMS BS EN ISO 9001:2015
QUAY AUDIT UK LTD

ASCB Accreditation Services Worldwide

În numele **Quay Audit UK Limited**

ASCB Accreditation Services Worldwide
www.ascb.com

GA GLOBAL ACCREDITATION
www.global-accreditation.org

IRQAO
www.irqao.com

Acesta este un certificate acreditat si autorizat pentru emitere de catre Accreditation Service for Certifying Bodies (Europe) Limited, evaluat de catre Quay Audit UK Limited in conformitate cu ISO 17021: 2006 "Evaluarea conformitatii. Cerinte pentru organisme care efectueaza audit si certificare de sisteme de management". Acest certificat este valabil numai atunci cand este inscris in registrul International Register of Quality Assessed Organisations: www.irqao.com

Grove House 8 St. Julian's Friars Shrewsbury Shropshire SY1 1XL | (44)1743 351677 | post@quayaudit.co.uk | www.quayaudit.co.uk

QuayAudit

REGISTRATION CERTIFICATE

This certificate confirms that the management systems of

"LED MARKET" SRL

MD-2029, șos. Munceşti, nr. 801, mun. Chişinău, Republica Moldova

have been audited and approved by
Quay Audit UK Ltd to the following management standard:

BS EN ISO 45001:2018

The approved management systems apply to the following scope:

Production and Marketing of LED Lighting Products

This certificate is restricted to those scopes of business activity described in the internationally recognised NACE Codes listed below:

2740 & 4759

Original Approval	**12 July 2019**
Current Certificate	**12 July 2019**
Certificate Expiry	**12 July 2022**
Registration Number	**4156714**

REGISTERED MANAGEMENT SYSTEMS
BS EN ISO 45001:2018
QUAY AUDIT UK LTD

ASCB Accreditation Services Worldwide

On behalf of **Quay Audit UK Limited**

www.ascb.com

www.global-accreditation.org

www.irqao.com

This is an accredited certificate authorised for issue by Accreditation Service for Certifying Bodies (Europe) Limited who have assessed Quay Audit UK Limited against defined criteria and in cognisance of ISO 17021:2011 'Conformity Assessment - Requirements for bodies providing audit and certification of management systems'. This certificate is only valid when confirmed by the register listed in the International Register of Quality Assessed Organisations' www.irqao.com

Grove House 8 St. Julian's Friars Shrewsbury Shropshire SY1 1XL | (44)1743 351677 | post@quayaudit.co.uk | www.quayaudit.co.uk

QuayAudit

CERTIFICAT DE INREGISTRARE

Acest certificat confirma faptul că sistemul de management al

"LED MARKET" SRL

MD-2029, șos. Muncești, nr. 801, mun. Chișinău, Republica Moldova

a fost auditat și aprobat de către
Quay Audit UK Ltd pentru următorul standard de management :

BS EN ISO 45001:2018

Sistemul de management aprobat se aplică pentru urmatoarele domenii de activitate:

Producerea și comercializarea produselor de iluminat de tip LED

Acest certificat se aplica pentru acele domenii de activitate descrise
în Codurile NACE(CAEN) enumerate mai jos, recunoscute internaţional:

2740 & 4759

Aprobat initial la	**12 lulie 2019**
Certificare initiala la	**12 lulie 2019**
Certificatul expira la	**12 lulie 2022**
Numarul certificatului	**4156714**

REGISTERED MANAGEMENT SYSTEMS BS EN ISO 45001:2018 QUAY AUDIT UK LTD

ASCB Accreditation Services Worldwide

În numele **Quay Audit UK Limited**

www.ascb.com www.global-accreditation.org www.irqao.com

Acesta este un certificate acreditat si autorizat pentru emitere de catre Accreditation Service for Certifying Bodies (Europe) Limited, evaluat de catre Quay Audit UK Limited in conformitate cu ISO 17021: 2006 "Evaluarea conformitatii. Cerinte pentru organisme care efectueaza audit si certificare de sisteme de management". Acest certificat este valabil numai atunci când este inscris in registrul International Register of Quality Assessed Organisations: www.irqao.com

Grove House 8 St. Julian's Friars Shrewsbury Shropshire SY1 1XL | (44)1743 351677 | post@quayaudit.co.uk | www.quayaudit.co.uk

		BC 'Mobiasbanca-OTP Group'SA				BIC	MOBBMD22	
		Banca beneficiara						
		Cod fiscal	1004600060124		IBAN	MD21MO2224ASV63167697100		

Datele tehnice: Street Light LEAF-2 30W-50W

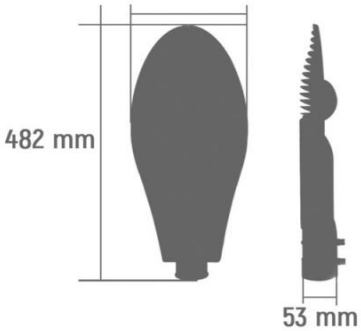

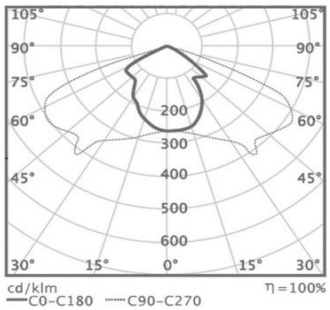

Lungime (Mm)		482
Lățime (Mm)		280
Înălțime (Mm)		53
Puterea De Iluminare (W)		30 - 50
Numărul De Lumeni (Lm)		3300-5500
Garanția (Luni):		36
Tensiunea De Lucru (V)		220
Protecție		IP65
Durata De Viață (H):		50000
Material Carcasă		Aluminiu
Indicele De Redare Al Culorii (Ra)		90
Clasa Energetica :		A
Timp Pornire (S):		0.2
Greutatea felinarului kg:		1,4

	BC 'Mobiasbanca-OTP Group'SA			BIC	MOBBMD22		
	Banca beneficiara						
	Cod fiscal	1004600060124		IBAN	MD21MO2224ASV63167697100		

Datele tehnice: Street Light LEAF-2 30W-50W

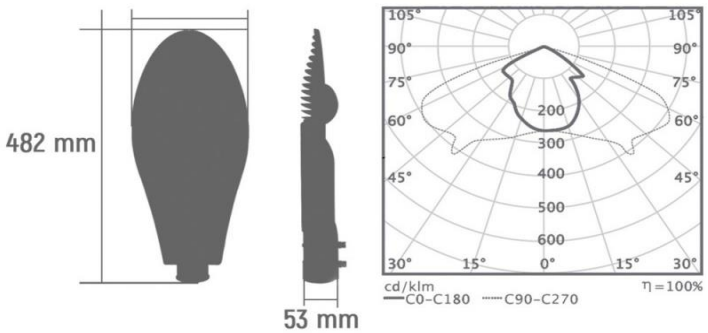

Lungime (Mm)		482
Lățime (Mm)		280
Inălțime (Mm)		53
Puterea De Iluminare (W)		30 - 50
Numărul De Lumeni (Lm)		3300-5500
Garanția (Luni):		36
Tensiunea De Lucru (V)		220
Protecție		IP65
Durata De Viață (H):		50000
Material Carcasă		Aluminiu
Indicele De Redare Al Culorii (Ra)		90
Clasa Energetica :		A
Timp Pornire (S):		0.2
Greutatea felinarului kg:		1,4

	BC 'Mobiasbanca-OTP Group'SA			BIC	MOBBMD22		
	Banca beneficiara						
	Cod fiscal	1004600060124		IBAN	MD21MO2224ASV63167697100		

Datele tehnice: Street Light LEAF-2 30W

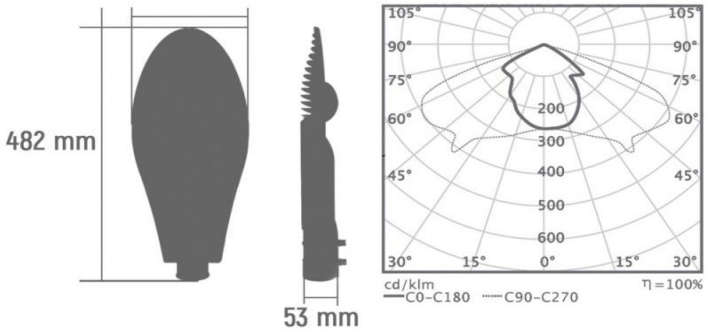

Lungime (Mm)		482
Lățime (Mm)		280
Inălțime (Mm)		53
Puterea De Iluminare (W)		30
Numărul De Lumeni (Lm)		3600
Garanția (Ani):		3
Tensiunea De Lucru (V)		110-265V
Frecventa nominala		50Hz
Protecție		IP65
Factorul de putere		0,97
Durata De Viață (H):		50000
Material Carcasă		Aluminiu
Indicele De Redare Al Culorii (Ra)		90
Clasa Energetica :		A
Protectiala descarcari atmosferice		4kV
Temperatura de culoare	cuprinsa intre 3000-6000K	
Temperatura de functonare	minus 20*C ..... Plus 40*C	
Timp Pornire (S):		0.2
Greutatea felinarului kg:		1,4

STREET LIGHT LEAF

LED LEAF RANGE

FABRICAT IN MOLDOVA

1COB

SMD
PHILIPS

2COB

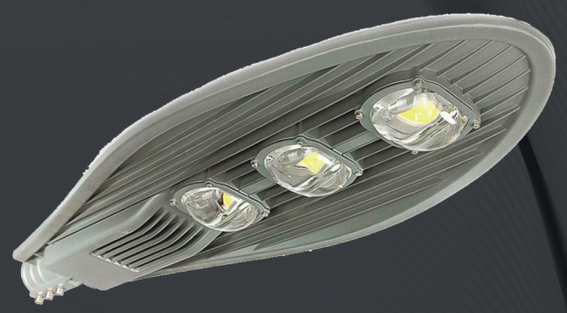

3COB

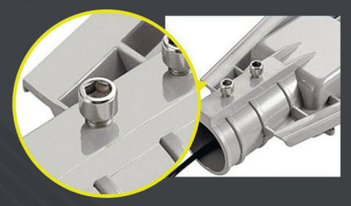

Lampile noastre stradale cu LED sunt menite sa inlocuiasca lampile clasice cu halogen, cu mercur, cu ioduri metalice, economice, etc.
Lampa stradala cu leduri nu emite niciun fel de lumina orbitoare.
Acest lucru face mult mai sigur condusul pentru soferi pe autostrazi si in zone pustii, in special in conditii meteorologice nefavorabile.
Efectul de orbire cauzat de iluminatul stradal clasic provoaca o mare oboseala vizuala.
Acest efect secundar este evident redus,
la fel ca si accidentele rutiere, care sunt de asemenea reduse.

FABRICAT IN MOLDOVA

1 COB

W	30	40	50
Lm	4200	5600	7000

3 YEARS WARRANTY
50 000 H
IP 67
K
120°

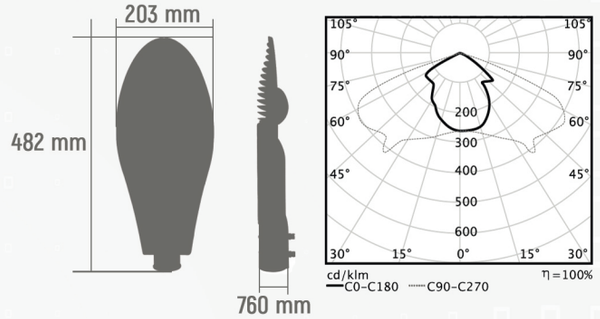

2 COB

W	60	80	100
Lm	8400	11200	14000

3 YEARS WARRANTY
50 000 H
IP 67
K
120°

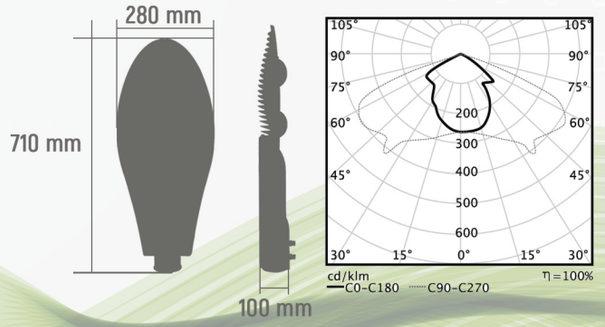

3 COB

W	100	150
Lm	14000	21000

3 YEARS WARRANTY
50 000 H
IP 67
K
120°

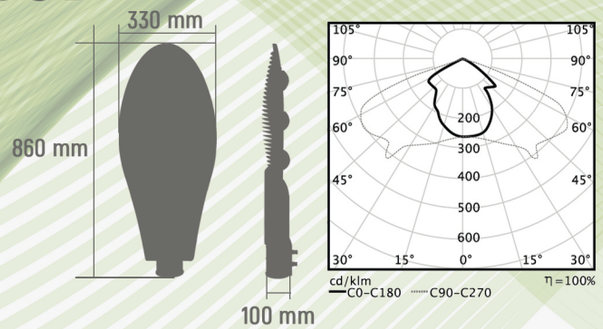

Caracteristici fototehnice ale corpului de iluminat

Producator S.C.”LED MARKET”SRL

R. Moldova, or.Chisinau, B-ul Moscova 21

LED market
FABRICAT IN MOLDOVA

Datele fotometrice

Denumirea –

STREET LIGHT 50W 1COB 5700K (LEAF)

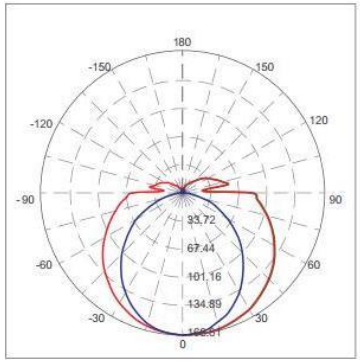

Illuminanceata Distance

	Center Beam LUX	Beam Width V	Beam Width H
2m	42.07 LUX	24.3m	5.0m
4m	10.52 LUX	48.7m	10.1m
6m	4.67 LUX	73.0m	15.1m
8m	2.63 LUX	97.4m	20.2m
10m	1.68 LUX	121.7m	25.2m
12m	1.17 LUX	146.1m	30.3m

Vert.Spread: 161.4 Horiz.Spread : 103.3

SC"LEDMARKET"SRL

Date tehnice

Puterea nominala (W)	**50**
Flux luminos(Lm)	7000lm
Protectie (IP)	IP65
Temperatura de culoare (K)	3000-6000K
Durata de viata (ore)	50000 ore
Voltaj conexiune	85-265V
Grad de disfuzie	150,lentila din sticla borosilicata
CRI	80-90
Garantie	36 luni
Producator	LedMarket

Caracteristici fototehnice ale corpului de iluminat

Producator S.C.”LED MARKET”SRL

R. Moldova, or.Chisinau, B-ul Moscova 21

Datele fotometrice

Denumirea –STREET LIGHT 30W 1COB 6000K (LEAF)

Descriere - LED-uri de putere, tip cu eficiență energetică mare. Carcasă din aliaj pe bază de aluminiu turnat sub presiune,vopsita in camp electrostatic(culoare la cerere client), cu un design optimizat pentru a avea o mai bună disipare a căldurii. Sistem optic de înaltă eficiență cu o lentila monobloc.Lentila monobloc si PCB-ul cu LED-uri sunt asamblate prin suruburi pentru a putea fi inlocuite in caz de defect. Montaj pe stâlp: braț fix sau ajustabil: ± 90° din 3in 3grade(obtional)

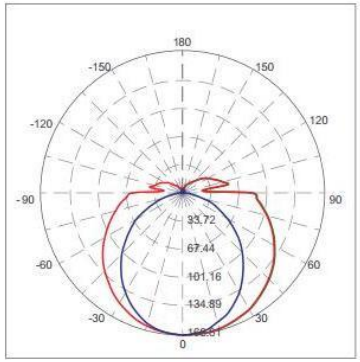

Illuminanceata Distance

	Center Beam LUX	Beam Width V	Beam Width H
2m	42.07 LUX	24.3m	5.0m
4m	10.52 LUX	48.7m	10.1m
6m	4.67 LUX	73.0m	15.1m
8m	2.63 LUX	97.4m	20.2m
10m	1.68 LUX	121.7m	25.2m
12m	1.17 LUX	146.1m	30.3m

Vert.Spread: 161.4 Horiz.Spread : 103.3

SC"LEDMARKET"SRL

Date tehnice

STREET LIGHT 30W 1COB 6000K (LEAF)

Puterea nominala (W)	**30**
Flux luminos(Lm)	3600lm
Protectie (IP)	IP65
Temperatura de culoare (K)	3000-6000K
Durata de viata (ore)	50000 ore
Voltaj conexiune	85-265V
Grad de disfuzie	150
CRI	80-90
Garantie	36 luni
Producator	LedMarket

STREETLIGHT PHOTOMETRIC TEST REPORT

Test:U:221.6V I:0.2440A P:52.10W PF:0.9620 Lamp Flux:5789.8x1 lm		
NAME: LEAF RANGE	TYPE:50W	WEIGHT:1.7
DIM.:	SPEC.:5700K	SERIAL No.:
MFR.: LED MARKET SRL	SUR.:	PROTECTION ANGLE:

DATA OF LAMP		PHOTOMETRIC DATA Eff: 109.25 lm/W			
STREET LIGHT LEAF RANGE 50W, 5700K		Imax(cd/klm)	532.4	h street_up(%)	0.0
NOMINAL POWER(W)	50	LOR(%)	98.3	h street_down(%)	46.6
RATED VOLTAGE(V)	222	TOTAL FLUX(lm/klm)	983.1	h house_up(%)	0.0
NOMINAL FLUX(lm)	5789.8	MAXIMUM @(C,g)	180,63.0	h house_down(%)	51.8
LAMPS INSIDE	1	h up(%)	0.0	76 FLASHAREA(m2)	
TEST VOLTAGE(V)	221.6	h down(%)	98.3	SLI	

INTENSITY DISTRIBUTION DIAGRAM
IN C PLANS

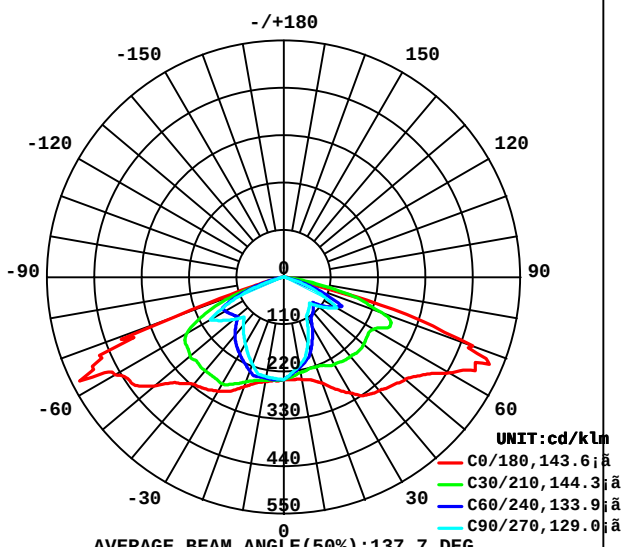

AVERAGE BEAM ANGLE(50%):137.7 DEG

MAX INTENSITY CONE SURFACE
DISTRIBUTION DIAGRAM

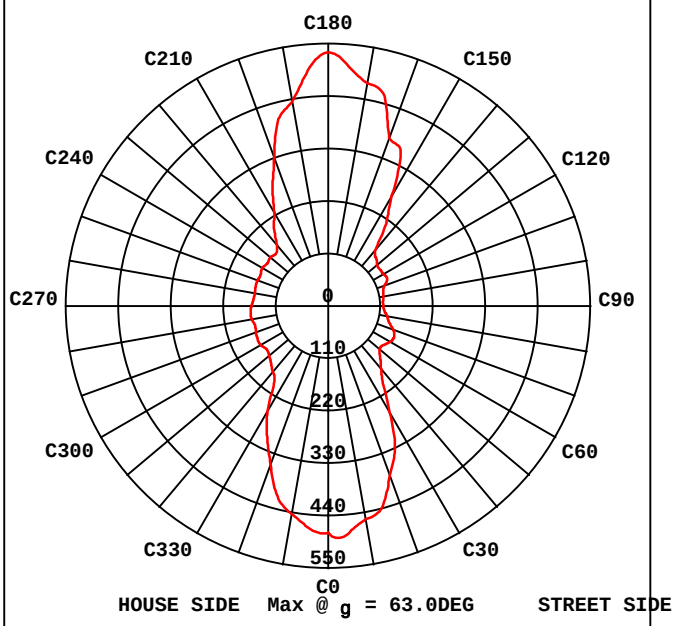

C Range: 0 - 360DEG
C Interval: 5.0DEG
Test Speed: HIGH
Temperature:22DEG
Test Date:2019-03-21

g Range: 0 - 90DEG
g Interval: 0.5DEG
Test System:EVERFINE GO-2000A_V1 SYSTEM V2.0.269
Humidity:65.0%
Test Distance:8.000m [K=1.0000]
Remarks:

Note: SLI:Specific Luminaire Index

C:\Users\LAB\Desktop\LED\HIGH BAY\STREET\LEAF\STREET LEAF 50W 5700K.GOS

STREETLIGHT ISOCANDELA DIAGRAM

Test:U:221.6V I:0.2440A P:52.10W PF:0.9620 Lamp Flux:5789.8x1 lm		
NAME: LEAF RANGE	TYPE:50W	WEIGHT:1.7
DIM.:	SPEC.:5700K	SERIAL No.:
MFR.: LED MARKET SRL	SUR.:	PROTECTION ANGLE:

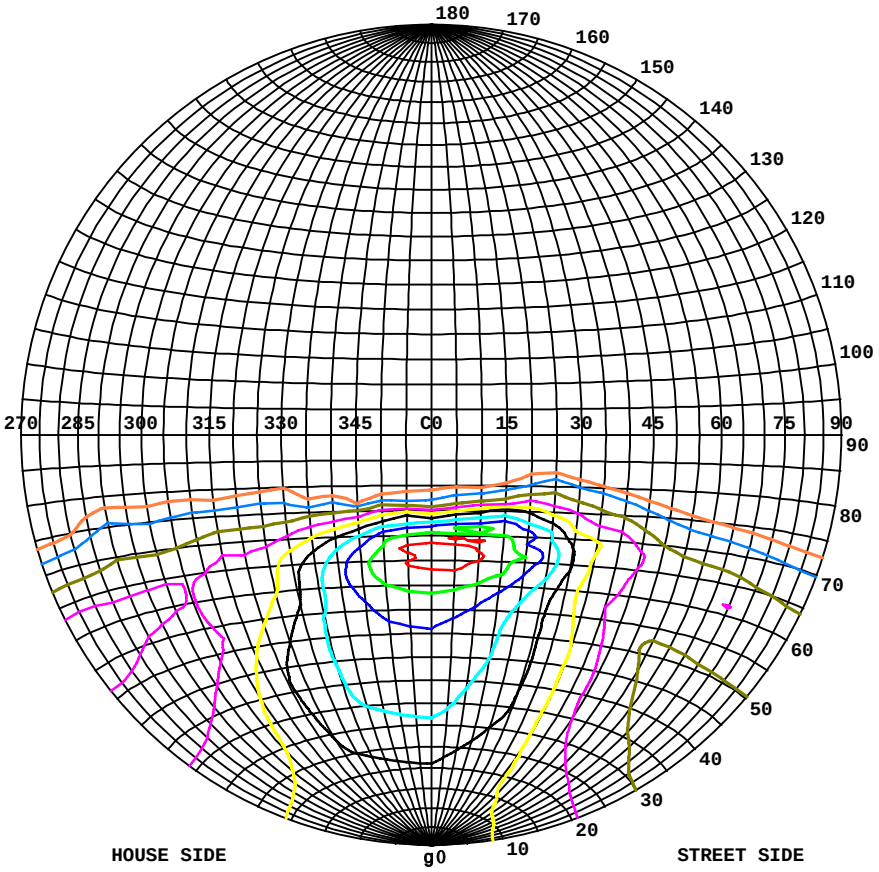

Classification:

IES:Type II - Short
CIE:Narrow - Intermediate
IES:Cut-off
CIE:Semi-cut-off
Max.At80:83.01cd/klm
Max.At90:1.080cd/klm
Max.80-90:83.01cd/klm
NRB 5101:Semi limited[20.7%]

ISOCANDELA DIAGRAM	
UNIT	cd/klm
Imax=100%	532
90%	479
80%	426
70%	373
60%	319
50%	266
40%	213
30%	160
20%	106
10%	53
5%	27

C Range: 0 - 360DEG
C Interval: 5.0DEG
Test Speed: HIGH
Temperature:22DEG
Test Date:2019-03-21

g Range: 0 - 90DEG
g Interval: 0.5DEG
Test System:EVERFINE GO-2000A_V1 SYSTEM V2.0.269
Humidity:65.0%
Test Distance:8.000m [K=1.0000]
Remarks:

C:\Users\LAB\Desktop\LED\HIGH BAY\STREET\LEAF\STREET LEAF 50W 5700K.GOS

COEFFICIENT OF UTILIZATION CURVE AND ISOLUX DIAGRAM

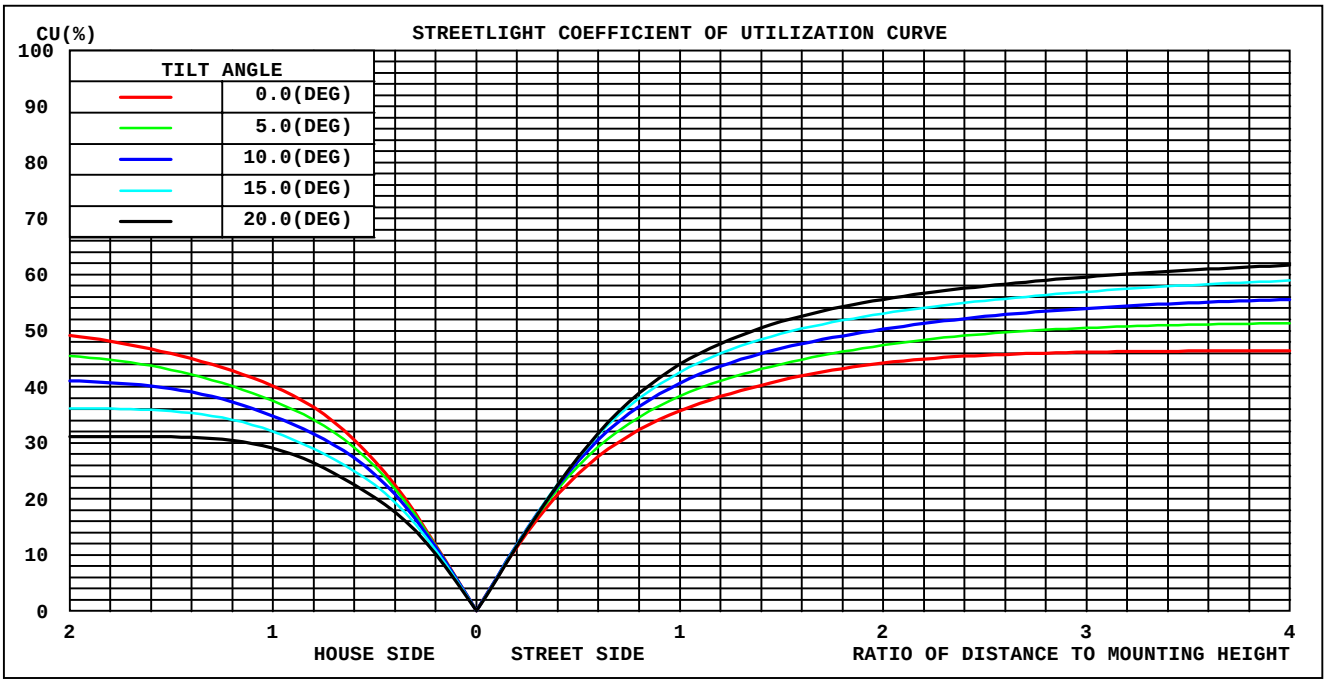

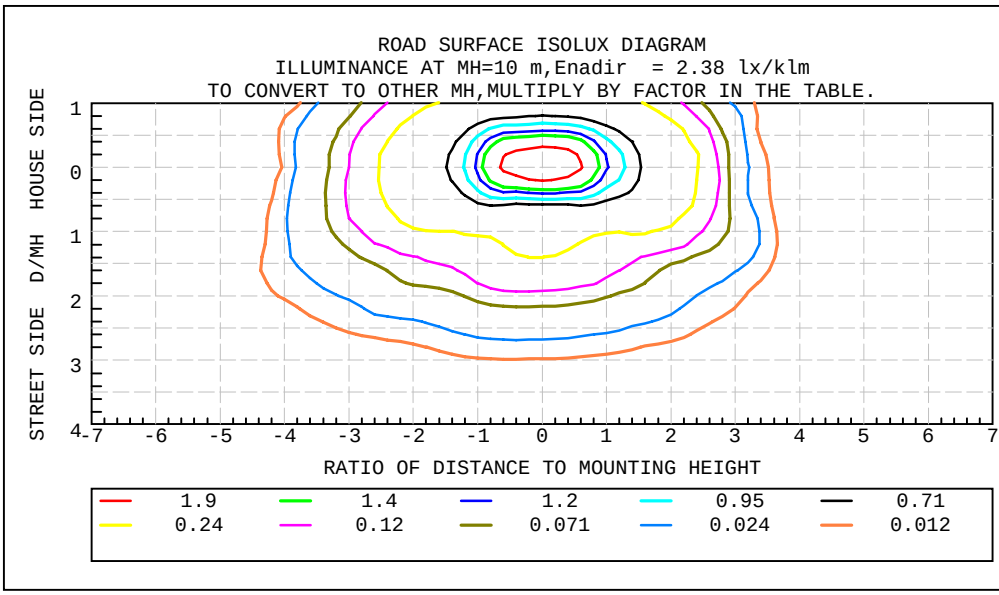

According to LB/T001-2008:
U = Emin/Eavg = 0.605
Eavg = 14.73 lx

HEIGHT	FACTOR
5 m	4.000
6 m	2.778
7 m	2.041
8 m	1.563
9 m	1.235
10 m	1.000
11 m	0.826
12 m	0.694
13 m	0.592
14 m	0.510
15 m	0.444
16 m	0.391

C Range: 0 - 360DEG
C Interval: 5.0DEG
Test Speed: HIGH
Temperature:22DEG
Test Date:2019-03-21

g Range: 0 - 90DEG
g Interval: 0.5DEG
Test System:EVERFINE GO-2000A_V1 SYSTEM V2.0.269
Humidity:65.0%
Test Distance:8.000m [K=1.0000]
Remarks:

C:\Users\LAB\Desktop\LED\HIGH BAY\STREET\LEAF\STREET LEAF 50W 5700K.GOS

ZONAL FLUX DIAGRAM

Test:U:221.6V I:0.2440A P:52.10W PF:0.9620 Lamp Flux:5789.8x1 lm		
NAME: LEAF RANGE	TYPE:50W	WEIGHT:1.7
DIM.:	SPEC.:5700K	SERIAL No.:
MFR.: LED MARKET SRL	SUR.:	PROTECTION ANGLE:

g	C0	C45	C90	C135	C180	C225	C270	C315	g	F zone	F total	%lum,lamp
5	240.0	228.9	223.6	230.9	241.6	240.5	236.7	238.1	0- 5	5.644	5.644	0.57,0.56
10	241.7	218.6	208.9	221.1	247.0	240.7	235.0	236.9	5- 10	16.63	22.28	2.27,2.23
15	247.5	211.1	194.2	213.1	254.7	244.3	233.4	238.1	10- 15	27.25	49.52	5.04,4.95
20	262.5	202.9	164.8	204.6	271.6	249.2	215.5	240.9	15- 20	37.37	86.89	8.84,8.69
25	287.2	188.2	135.4	190.6	292.4	246.0	197.5	238.6	20- 25	46.68	133.6	13.6,13.4
30	311.3	172.1	105.9	176.8	306.0	242.1	179.6	237.4	25- 30	55.38	189.0	19.2,18.9
35	335.1	161.2	99.34	166.4	317.3	239.5	163.3	239.0	30- 35	63.39	252.3	25.7,25.2
40	344.8	153.0	92.73	158.1	325.4	232.9	147.0	240.1	35- 40	71.05	323.4	32.9,32.3
45	357.0	152.5	86.13	150.7	348.0	213.7	130.7	224.5	40- 45	77.60	401.0	40.8,40.1
50	369.7	143.6	105.4	140.5	393.9	191.1	153.5	204.2	45- 50	84.47	485.5	49.4,48.5
55	395.8	134.6	124.7	128.6	431.0	162.9	176.3	176.7	50- 55	94.71	580.2	59,58
60	445.4	148.9	143.9	139.8	454.5	163.6	199.1	174.4	55- 60	106.6	686.7	69.9,68.7
65	490.7	159.3	97.18	142.2	490.6	147.7	136.4	166.7	60- 65	115.7	802.4	81.6,80.2
70	468.1	140.7	50.41	102.2	275.1	106.4	73.65	134.1	65- 70	103.2	905.6	92.1,90.6
75	173.7	68.86	3.646	49.65	39.01	51.19	10.94	67.88	70- 75	59.15	964.7	98.1,96.5
80	14.44	4.106	0	3.024	6.798	3.280	0	6.828	75- 80	16.18	980.9	99.8,98.1
85	4.040	0	0	0	2.484	0	0	0	80- 85	1.969	982.9	100,98.3
90	0.9348	0	0	0	1.080	0	0	0	85- 90	0.1984	983.1	100,98.3
95									90- 95			
100									95-100			
105									100-105			
110									105-110			
115									110-115			
120									115-120			
125									120-125			
130									125-130			
135									130-135			
140									135-140			
145									140-145			
150									145-150			
155									150-155			
160									155-160			
165									160-165			
170									165-170			
175									170-175			
180									175-180			
DEG	LUMINOUS INTENSITY:cd/klm									UNIT:lm/klm		

C Range: 0 - 360DEG
C Interval: 5.0DEG
Test Speed: HIGH
Temperature:22DEG
Test Date:2019-03-21

g Range: 0 - 90DEG
g Interval: 0.5DEG
Test System:EVERFINE GO-2000A_V1 SYSTEM V2.0.269
Humidity:65.0%
Test Distance:8.000m [K=1.0000]
Remarks:

ISOCANDELA DIAGRAM

Test:U:221.6V I:0.2440A P:52.10W PF:0.9620 Lamp Flux:5789.8x1 lm		
NAME: LEAF RANGE	TYPE:50W	WEIGHT:1.7
DIM.:	SPEC.:5700K	SERIAL No.:
MFR.: LED MARKET SRL	SUR.:	PROTECTION ANGLE:

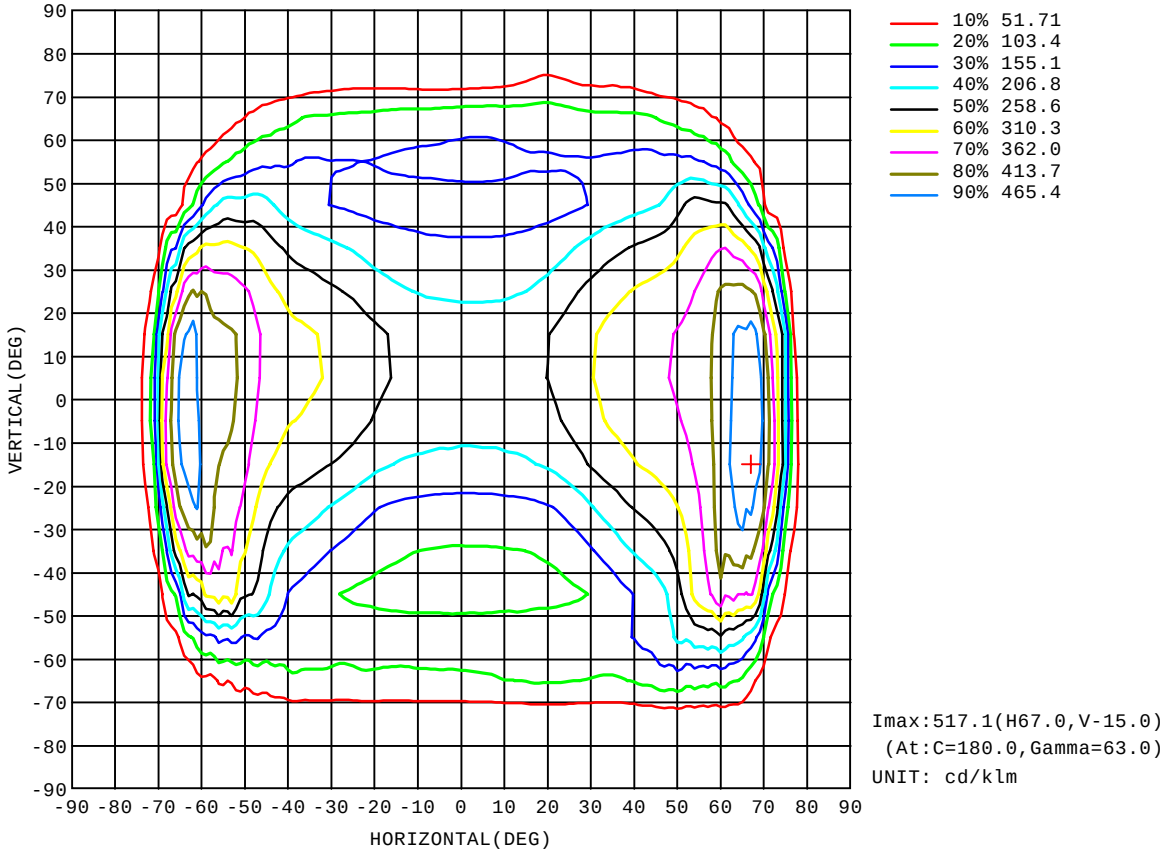

C Range: 0 - 360DEG
C Interval: 5.0DEG
Test Speed: HIGH
Temperature:22DEG
Test Date:2019-03-21

g Range: 0 - 90DEG
g Interval: 0.5DEG
Test System:EVERFINE GO-2000A_V1 SYSTEM V2.0.269
Humidity:65.0%
Test Distance:8.000m [K=1.0000]
Remarks:

C:\Users\LAB\Desktop\LED\HIGH BAY\STREET\LEAF\STREET LEAF 50W 5700K.GOS

Planar Illuminance Curve

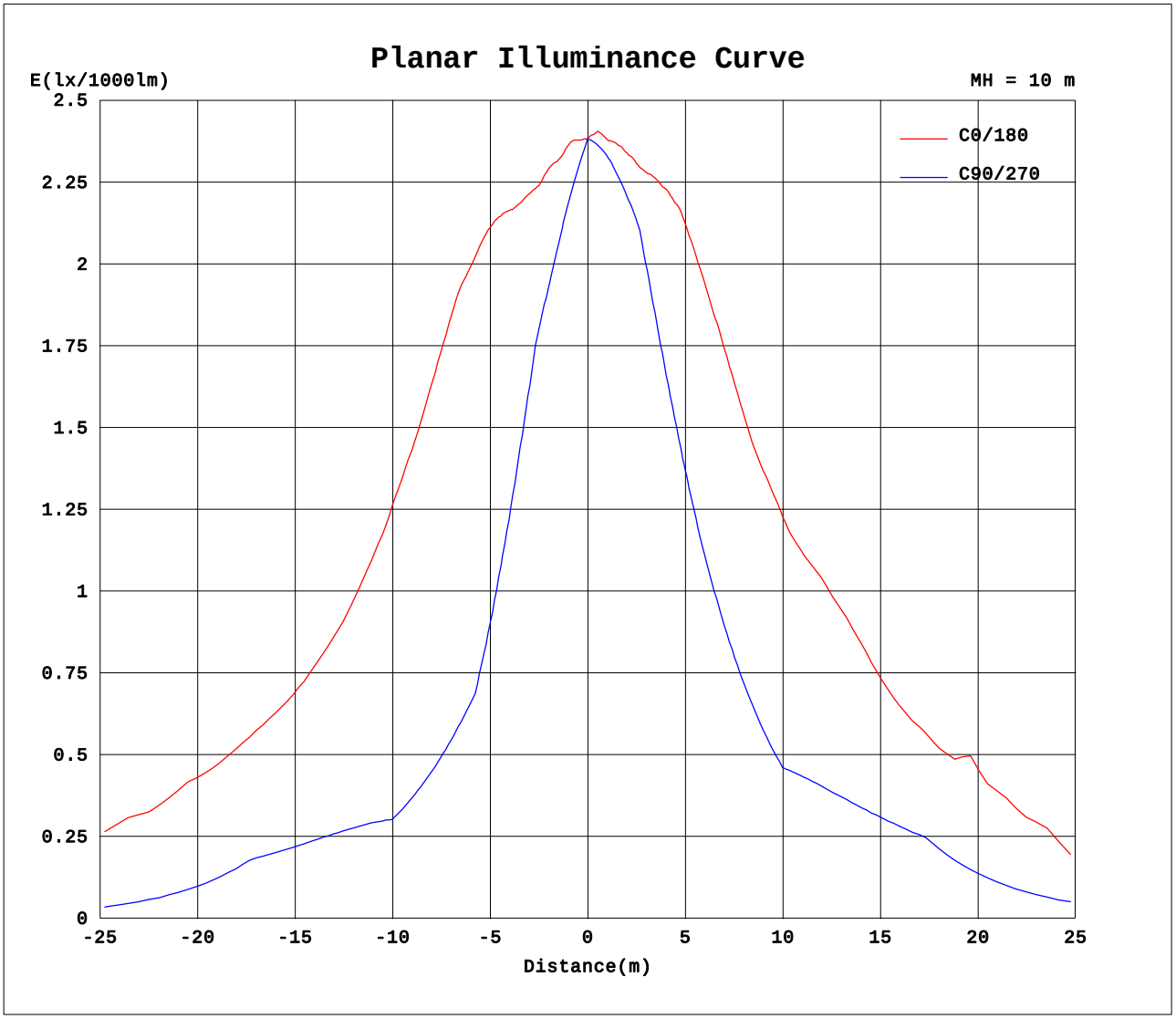

C Range: 0 - 360DEG
C Interval: 5.0DEG
Test Speed: HIGH
Temperature:22DEG
Test Date:2019-03-21

g Range: 0 - 90DEG
g Interval: 0.5DEG
Test System:EVERFINE GO-2000A_V1 SYSTEM V2.0.269
Humidity:65.0%
Test Distance:8.000m [K=1.0000]
Remarks:

C:\Users\LAB\Desktop\LED\HIGH BAY\STREET\LEAF\STREET LEAF 50W 5700K.GOS