Digitally signed by Pîslaru Rodica
Date: 2026.08.04 16:16:00 EEST
MoldSign Signature
ANĂ

METRIA

# ABBE Analogic refractometer RST111

*Please read the User Manual carefully before use, and follow all operating and safety instructions!*

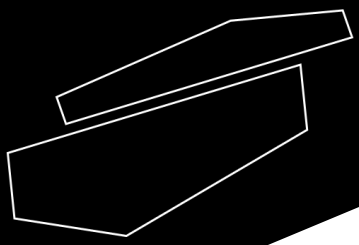

## user manual

english

# Contents

1、 Purpose

2、 Specifications

3、 Principle of Operation

4、 Construction

5、 How to Use the Instrument

6、 Maintenance

7、 Complete Set of the Instrument

8、 Addenda

## 1、Purpose

The Abbe Refractometer is intended for measuring the refractive index nD and the average dispersion nF – nC of transparent or translucent liquid, or solid substance (of which mainly intended for measuring transparent liquid). In case of the instrument being connected with a thermostat, it will be able to measure the refractive index nD at a temperature between 0°and 70°.

Both the refractive index and average dispersion are the important optical constants, through which we can understand the optical performance, purity, concentration, as well as dispersion of a substance. In this instrument, based on the formula provided by the International Commission of Uniform Method of Sugar Analysis (ICUMSA) in 1974, the refractive index is converted into the mass fraction (Brix) of cane sugar solution, with a range of conversion from 0 to 95%. Therefore, this instrument has found an increasingly wide utilization in the fields as petroleum, oil, pharmaceutical, paint, food, chemical and sugar refining industries, as well as in geological prospecting enterprises, colleges, universities and scientific research institutions.

## 2、Specifications

Measurement range of refractive index ($n_D$): 1.3000—1.7000

Measurement accuracy ($n_D$): ±0.0002

Weight: 2.6kg

Overall dimensions: 100mm×200mm×240mm

## 3. Principle of Operation

The principle of operation of refractometer is based on the law of refraction: $n_1 \sin\alpha_1 = n_2 \sin\alpha_2$, in which $n_1$ and $n_2$ stand for the refractive indexes of two media at both sides of the interface respectively (see Figure 1).

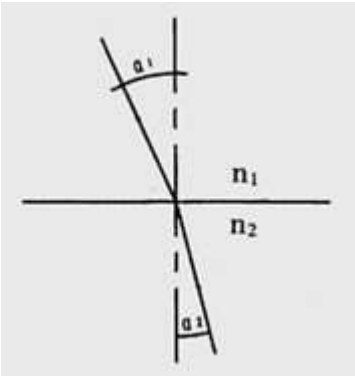


Figure 1

α1—Incidence angle; α2—Refraction angle

If a light beam enters an optically thinner medium from an optically dense medium, with an incidence angle smaller than refraction angle, then changing the angle, the refraction angle will be varied up to 90°; at that moment the incidence angle is known as a critical angle. Based on the critical angle, the refractive index can be measured by using this instrument.

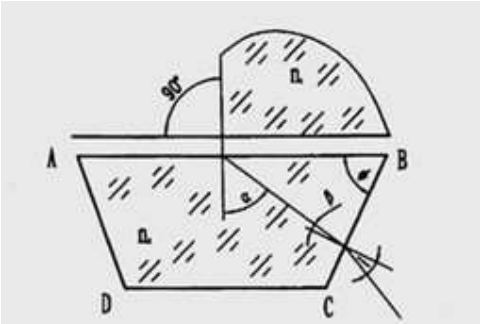


Figure 2

Figure 2 shows whatever light beams entering the surface AB at different angles, all their refraction angles are larger than i. When observing the outgoing beam with a telescope, we will find that the field of the telescope is divided into two parts, one is light and the other shade, between them is an evident separatrix, as shown in Figure 3. The penumbra is the position of the critical angle.

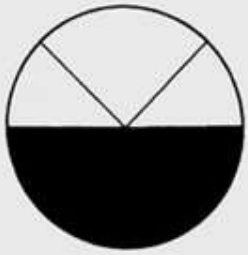

Figure 3

In Figure 2, ABCD is a refracting prism with a refractive index of $n_2$. Above the surface AB is the substace (transparent solid or liquid) to be measured, with a refractive index of $n_1$. From the law of refraction, we obtain:

$n_1 \cdot \sin 90^\circ = n_2 \cdot \sin\alpha$ ·····_ _·····(1)

$n_2 \cdot \sin\beta = \sin i$

Because $\phi = \alpha + \beta$

Hence $\alpha = \phi - \beta$

Substitute into formula (1), we get:

$n_1 = n_2 \cdot \sin(\phi - \beta)$

$= n_2 (\sin\phi\cos\beta - \cos\phi\sin\beta)$ ·····(2)

From formula (1), we obtain:

$n^2_2 \cdot \sin^2\beta = \sin^2 i$

$n^2_2(1 - \cos^2\beta) = \sin^2 i$

$n^2_2 - n^2_2 \cos^2\beta = \sin^2 i$

$\cos\beta = \sqrt{(n^2_2 - \sin^2 i)} / n^2_2$

Substitute into formula (2), we reach:

$n_1 = \sin\phi = (\sqrt{n^2_2 - \sin^2 i}) - \cos\phi\sin I$

The refraction angle $\phi$ and refractive index $n_2$ of the prism are given, so that when the critical angle i is measured, the refractive index $n_1$ of the substance to be measured can be obtained through conversion.

# 4. Construction

## 4.1 Optical part

The optical part of the instrument consists of two systems, viz. the telescope and the reading (refer to Figure 4).

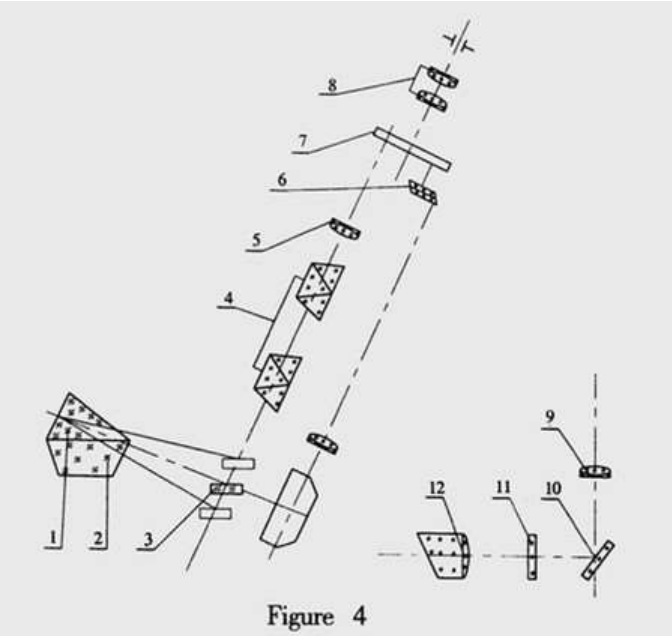


Figure 4

| | |
|---|---|
| 1 – Light-entering prism | 2 – Refracting prism |
| 3 – Swinging reflecting mirror | 4 – Amici prisms unit |
| 5 – Telescope objectives unit | 6 – Parallel prism |
| 7 – Dividing scale | 8 – Eyepiece |
| 9 – Reading objective | 10 – Reflecting mirror |
| 11 – Scale plate | 12 – Condensing lens |

Between the light-entering prism (1) and the refracting prism (2) there is a small gap, in which the liquid to be measured in placed. When a light beam (natural light or incandescent light) enters the light-entering prism (1), diffuse reflection will be caused on its frosted surface; therefore, incident rays with various angles in the liquid to be measured will, via the reflecting prism (2), form a light beam with reflaction angles larger than the angle of emergence i. The swinging reflecting mirror (3) guides the light beam into the Amici prisms unit (4), which consists of a pair of Amici prism, and plays a function of using a changeable dispersion to offset against the dispersion produced by the

refracting prism to different substance to be measured. Then the telescope objectives unit (5) images the separatrix on the dividing scale (7), on which a graticule can be seen through the eyepiece (8), an image as shown on the upper part of Figure 5.

Illuminated by light beam via the condensing lens (12), the scale plate (11) links with the swinging reflecting mirror (3) to form an integral whole, and gyrates around the center of the graduation. Though the reflecting mirror (10) and reading lens (9), the parallel prism (6) images the indicating values of the refractive indexes from different positions of the scale plate onto the dividing scale (7) (refer to the image on the lower part of Figure 5).

Figure 5

4.2 Construction (see Figures 6 & 7)

The base (14) is a cradle for the instrument, on which the casing (17) is mounted. All optical components and the main structure are enclosed in the casing except the eyepiece and prisms. The prisms unit is mounted on the casing, consisting of light-entering prism, refracting prism and prism base. Two prisms are fixed in the prism holder with a special binding agent. (5) is the light-entering prism holder and (11) the refracting prism holder, both are linked by the rotation shaft (2) The light-entering prism can be opened or closed. When the two prism holders are tightly closed and locked by the hand wheel (10), a uniform gap is left between two surfaces of the above prisms and the liquid to be measured should be filled in the gap. (3) is the hood, (18) is the adapter connector for four thermostats, (4) is the thermometer, and (13) is the thermometer holder, which can be connected to the thermometer with an emulsive tube. (1) is the reflecting mirror, (8) is the eyepiece, (9) is the cover plate, (15) is the refractive index graduation adjusting hand wheel, (6) is the dispersion adjusting hand wheel, (7) is the dispersion graduation ring, and (12) is the condensing lens for illuminating the dial scale.

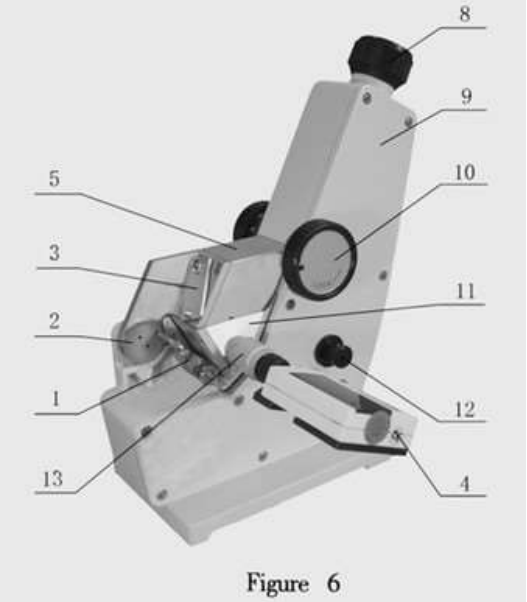

Figure 6

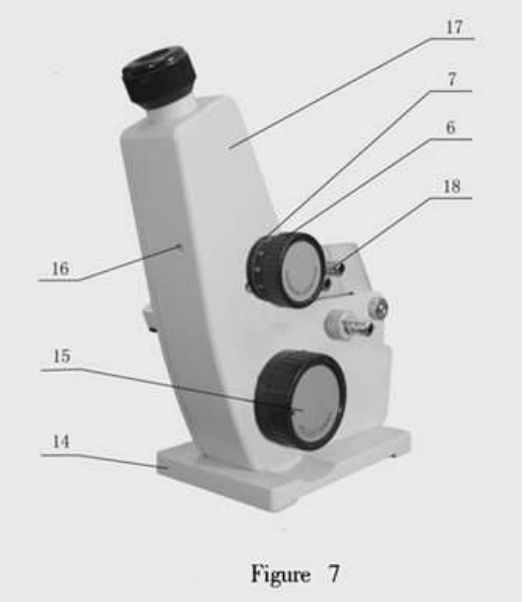

Figure 7

## 5. How to Use the Instrument

### 5.1 Preparation

5.1.1 Before performing the measurement, use distilled water (as specified in the Addendum) or standard sample to check the readings. In case of using standard sample, put one or two drops of naphthalene bromide onto the polished surface of the refracting prism, then make it contact with the polished surface of the standard sample. When the indication of the field of view is higher than the value of the standard sample, observe whether the separatrix is in the center of the graticule. If there is a deviation, slightly turn the screw inside the small hole (16) of Figure 7 with a screw driver, making the objective to offset until the separatrix moves to the center of the graticule. Repeat the observation and correction until to minimize the indication of the initial error (including the collimating error of the operator). After the completion of the correction, this location should be kept unchanged throughout the process of measurement.

Generally, the instrument needs not to be checked in the routine measurement. In case of having doubted of the indication of the measured refractive index, perform the checking procedure as specified in the above method to make clear whether there is an initial error and make a correction if necessary.

5.1.2 before performing the measurement and making the calibration of the indication each time, the dull surface, the polished surfaces of the reflecting prism and standard sample should be cleaned with absorbent cotton soaked in a mixed solution of absolute alcohol and diethy1 ether (1:1), so as

to remove other foreign substance which will affect the sharpness of image and the accuracy of measurement.

5.2 Measurement

5.2.1 Measurement of transparent or translucent liquid.

Add the liquid to be measured on the surface of the refracting prism with a clean dropper, cover the light-entering prism and lock it with the hand wheel (10). The field of view should be full of the uniform liquid, without air bubble. Open the hood (3), close the reflecting mirror (1) and adjust the visibility of the eyepiece, making the image of the graticule clear. At that moment, turn the hand wheel (15) and find the position of the separatrix in the field of view of the eyepiece, then turn the hand wheel (6) to make the separatrix out of any color. Readjust the hand wheel (15) to bring the separatrix in the center of the graticule, then turn appropriately the condensing lens (12), now the indication displayed in the lower part of the field of view of the eyepiece should be the refractive index of the liquid to be measured.

5.2.2 Measurement of transparent solid

If the sample to be measured is a kind of solid substance, the solid sample must a smooth polished surface. When performing the measurement, open the light-entering prism, put one or two drops of a transparent liquid (e.g. naphthalene bromide), the refractive index of which is higher than that of the sample to be measured, onto the polished surface of the sample to be measured onto the working surface of the refracting prism an let them have a good contact. Now find the separatrix in the field of view of the eyepiece; the operating methods of sighting and reading are the same as above.

5.2.3 Measurement of translucent solid

Stick the polished surface of the translucent solid to be measured on the refracting prism, open the reflecting mirror (1) and adjust the angle to use the reflecting light beam for measuring. The operating procedures are the same as above.

5.2.4 Measurement of the mass fraction (Brix) of sugar solution

The operation is the same as the measurement of refractive index; the indication displayed on the upper part of the field of view is the reading of the mass fraction of sugar solution.

5.2.5 Measurement of average dispersion

Basically the operation procedures are the same as the measurement of refractive index; however, when turn the dispersion adjustment hand wheel (6) in two different directions, it should be lasted until the color of the separatrix in the field of view fades away. Record each scale value Z indicated

on the scale ring (7) of the dispersion value and take the average value, then record the value of refractive index $n_D$. Based on the given $n_D$, the corresponding values of A and B can be found in the same row of the dispersion table of the Abbe Refractometer (in case $n_D$ falls between two numerical values in the table, the desired value can be found by interpolation. Finally, the corresponding value of $\sigma$ can be read off from the table according to the given value of Z. When Z $>30$, $\sigma$ is a positive value; when Z $>30$, negative value. Substitute the given values of A, B and $\sigma$ into the dispersion formula $n_F - n_C = A + B\sigma$, then the average value of dispersion can be got (an example is given in page 13).

5.2.6 When it is necessary to measure refractive indexed at different temperature, put the thermometer into the thermometer holder (13), connect the water tube of the thermostat, adjust the temperature of the thermostat to the required temperature for measuring and open the recirculating water, after the temperature to be steady for ten minutes, then perform the measurement.

## 6. Maintenance

To ensure the accuracy of the instrument and prevent it from damage, please pay attention to the maintenance. Some points for attention are hereby given:

6.1 The instrument should be placed in a dry and well-ventilated room, so as to prevent the optical components from becoming damp and going moldy.

6.2 After measuring corrosive liquid, it it necessary to do cleaning without delay (including optical components, metal parts and painting surface), so as to prevent the instrument from corrosive damage.

6.3 No solid impurity is permitted to exist in the sample to be measured. When measuring the solid sample, prevent the working surface of the refracting prisms from being roughed and scratched.

6.4 Regularly keep the instrument clean. Strictly prohibit hands wet with oil or perspiration from touching the optical components. If the surface of optical components is contaminated by dirt, use high-grade chamois or long-fiber absorbent cotton to gently wipe away and blow out with leather blower. If the surface of optical components is contaminated by greasy dirt, clean out with the mixed solution of alcohol and diethy1 ether without delay.

6.5 The instrument should avoid violent vibration or shock, so as to prevent the optical components from being damaged, and keep the accuracy of the instrument as well.

## 7. Complete Set of the Instrument (refer to the Packing List)

Packing List For Abbe Refractometer

| No. | Description | Qty | Remarks |
|---|---|---|---|
| 1 | Abbe Refractometer | 1 set | |
| 2 | Special – purpose thermometer (with protecting jacket) | 1 set | |
| 3 | Screw driver | 1 piece | |
| 4 | Standard sample (K9) | 1 piece | |
| 5 | Naphthalene bromide | 1 bottle | |
| 6 | Plastic cover hood for the instrument | 1 piece | |
| 7 | Operating instructions | 1 copy | |

Refractive Index and Average Dispersion of Distilled Water

| Tem ℃ | Refractive Index, $n_D$ | Av. Dis. $n_F$—$n_C$ | Tem ℃ | Refractive Index, $n_D$ | Av. Dis. $n_F$—$n_C$ |
|---|---|---|---|---|---|
| 10 | 1.33369 | 0.00600 | 31 | 1.33182 | 0.00594 |
| 11 | 1.33364 | 0.00600 | 32 | 1.33170 | 0.00593 |
| 12 | 1.33358 | 0.00599 | 33 | 1.33157 | 0.00593 |
| 13 | 1.33352 | 0.00599 | 34 | 1.33144 | 0.00593 |
| 14 | 1.33346 | 0.00599 | 35 | 1.33131 | 0.00592 |
| 15 | 1.33339 | 0.00599 | 36 | 1.33117 | 0.00592 |
| 16 | 1.33331 | 0.00598 | 37 | 1.33104 | 0.00591 |
| 17 | 1.33324 | 0.00598 | 38 | 1.33090 | 0.00591 |
| 18 | 1.33316 | 0.00598 | 39 | 1.33075 | 0.00591 |
| 19 | 1.33307 | 0.00597 | 40 | 1.33061 | 0.00590 |
| 20 | 1.33299 | 0.00597 | | | |
| 21 | 1.33290 | 0.00597 | | | |
| 22 | 1.33280 | 0.00597 | | | |
| 23 | 1.33271 | 0.00596 | | | |
| 24 | 1.33261 | 0.00596 | | | |
| 25 | 1.33250 | 0.00596 | | | |
| 26 | 1.33240 | 0.00596 | | | |
| 27 | 1.33229 | 0.00595 | | | |
| 28 | 1.33217 | 0.00595 | | | |
| 29 | 1.33206 | 0.00594 | | | |
| 30 | 1.33194 | 0.00594 | | | |

Dispersion Table for Abbe Refractometer

Dispersion formula: $n_F - n_C = A + B\sigma$

When the reading Z indicated on the scale ring is <30, the value σ read from the Table takes (+) sign; if >30, (-) sign

| $n_D$ | A | When $\Delta n = 001$, the difference of $A \times (10^{-4})$ | B | When $\Delta n = 001$, the difference of $A \times (10^{-4})$ | Z | σ | When $\Delta Z = 0.1$, the difference of $\sigma \times (10^{-4})$ | |
|---|---|---|---|---|---|---|---|---|
| 1.300 | 0.02494 | -6 | 0.03340 | -13 | 0 | 0.000 | 1 | 60 |
| 1.310 | 0.02488 | -5 | 0.03327 | -16 | 1 | 0.999 | 4 | 59 |
| 1.320 | 0.02483 | -5 | 0.03311 | -16 | 2 | 0.995 | 7 | 58 |
| 1.330 | 0.02478 | -5 | 0.03295 | -19 | 3 | 0.988 | 10 | 57 |
| 1.340 | 0.02473 | -4 | 0.03276 | -20 | 4 | 0.978 | 12 | 56 |
| 1.350 | 0.02469 | -5 | 0.03256 | -21 | 5 | 0.966 | 15 | 55 |
| 1.360 | 0.02464 | -4 | 0.03235 | -23 | 6 | 0.951 | 17 | 54 |
| 1.370 | 0.02460 | -4 | 0.03212 | -25 | 7 | 0.934 | 20 | 53 |
| 1.380 | 0.02456 | -4 | 0.03187 | -26 | 8 | 0.914 | 23 | 52 |
| 1.390 | 0.02452 | -4 | 0.03161 | -28 | 9 | 0.891 | 25 | 51 |
| 1.400 | 0.02448 | -3 | 0.03133 | -29 | 10 | 0.566 | 27 | 50 |
| 1.410 | 0.02445 | -4 | 0.03104 | -31 | 11 | 0.839 | 30 | 49 |
| 1.420 | 0.02441 | -3 | 0.03073 | -33 | 12 | 0.809 | 32 | 48 |
| 1.430 | 0.02438 | -3 | 0.03040 | -34 | 13 | 0.777 | 34 | 47 |
| 1.440 | 0.02435 | -3 | 0.03006 | -36 | 14 | 0.743 | 36 | 46 |
| 1.450 | 0.02432 | -3 | 0.02970 | -38 | 15 | 0.707 | 38 | 45 |
| 1.460 | 0.02429 | -2 | 0.02932 | -40 | 16 | 0.669 | 40 | 44 |
| 1.470 | 0.02427 | -2 | 0.02892 | -41 | 17 | 0.629 | 41 | 43 |
| 1.480 | 0.02425 | -2 | 0.02851 | -43 | 18 | 0.588 | 43 | 42 |
| 1.490 | 0.02423 | -2 | 0.02808 | -46 | 19 | 0.545 | 45 | 41 |
| 1.500 | 0.02421 | -1 | 0.02762 | -47 | 20 | 0.500 | 46 | 40 |
| 1.510 | 0.02420 | -1 | 0.02715 | -50 | 21 | 0.454 | 47 | 39 |
| 1.520 | 0.02419 | -1 | 0.02665 | -51 | 22 | 0.407 | 49 | 38 |
| 1.530 | 0.02418 | 0 | 0.02614 | -54 | 23 | 0.358 | 49 | 37 |
| 1.540 | 0.02418 | 0 | 0.02560 | -56 | 24 | 0.309 | 50 | 36 |
| 1.550 | 0.02418 | 0 | 0.02504 | -59 | 25 | 0.259 | 51 | 35 |
| 1.560 | 0.02418 | 0 | 0.02445 | -61 | 26 | 0.208 | 52 | 34 |
| 1.570 | 0.02418 | 1 | 0.02384 | -64 | 27 | 0.156 | 52 | 33 |
| 1.580 | 0.02419 | 2 | 0.02320 | -67 | 28 | 0.104 | 52 | 32 |
| 1.590 | 0.02421 | 2 | 0.02253 | -70 | 29 | 0.052 | 52 | 31 |
| 1.600 | 0.02423 | 2 | 0.02183 | -73 | 30 | 0.000 | | 30 |
| 1.610 | 0.02425 | 3 | 0.02110 | -77 | | | | |
| 1.620 | 0.02428 | 4 | 0.02033 | -80 | | | | |
| 1.630 | 0.02432 | 5 | 0.01953 | -85 | | | | |
| 1.640 | 0.02437 | 5 | 0.01868 | -89 | | | | |
| 1.650 | 0.02442 | 6 | 0.01779 | -95 | | | | |
| 1.660 | 0.02448 | 8 | 0.01684 | -100 | | | | |
| 1.670 | 0.02456 | 9 | 0.01584 | -107 | | | | |
| 1.680 | 0.02465 | 10 | 0.01477 | -114 | | | | |
| 1.690 | 0.02475 | 13 | 0.01363 | -124 | | | | |
| 1.700 | 0.02488 | | 0.01239 | | | | | |

Note: The dispersion angle of the refracting prism: $\phi = 62°$, maximum angle dispersion of Amici prism: 2K = 183.62', refractive index of refracting prism: $n_D = 1.7547$, average dispersion of refracting prism:

$n_F - n_C = 0.02738$

Take measuring the average dispersion of distilled water as an example:

When temperature is 20℃, $n_D = 1.3330$

The reading of dispersion value indicated on the scale ring will be:

| Turn in a certain direction | Turn in the opposite direction |
|---|---|
| 41.7 | 41.5 |
| 41.6 | 41.6 |
| 41.6 | 41.6 |
| 41.6 | 41.7 |
| 41.6 | 41.6 |
| 41.7 | 41.6 |
| Average value: 41.64 | 41.60 |

Total average value Z = 41.62

Read from the dispersion table:

When $n_D = 1.3330$, A = 0.024768 B = 0.032893

When Z = 41.62, $\sigma = -0.5716$ (for Z>30, so Z takes negative value)

$n_F - n_C = A + B\sigma = 0.024768 - 0.032893 \times 0.5716 = 0.00597$

# How to use the digital thermometer

i. Open the cover put in battery in accordance with the polarities.

ii. The thermometer works automatic as soon as having battery. Turn off-put the key for four seconds turn on-put the key again.

iii. When the temperature is more than 70℃, display H, when less than -50℃, display L℃.

iv. When the battery is short of charge, the screen will glint. You should change it.

v. Measuring range: -50℃ ～+70℃

Distinguishing rate: ＞-20℃ (0.1℃)

≤-20℃ (0.1℃)

Operating voltage: 1.5V button battery

www.labbox.com