CPRI

Digitally signed by Prodius Leonid
Date: 2026.01.16 12:23:07 EET
Reason: MoldSign Signature
Location: Moldova
MOLDOVA EUROPEANĂ

TEST REPORT

Central Power Research Institute
(A Govt. of India Society)
P.B. No.9, Medipally P.O.,
Uppal - Warangal Highway
HYDERABAD - 500 098 (INDIA)

CENTRAL POWER RESEARCH INSTITUTE

CPRI

TEST REPORT

Test Report Number	:	**UHV / T / 378** **Date: 22.02.2012**
Name & Address of the Customer	:	M/s. Crompton Greaves Ltd., EHV Switchgear Division (S_3), A-3, MIDC, Ambad, Nashik- 422010
Name & Address of the Manufacturer	:	M/s. Crompton Greaves Ltd., EHV Switchgear Division (S_3), A-3, MIDC, Ambad, Nashik- 422010
Particulars of sample tested		
Condition of the sample on receipt	:	New
Type	:	120-SFM-32B
Designation	:	145 kV, 3150 A, 40 kA, SP-SP, SF_6 Gas Circuit Breaker
Serial Number	:	37649C
Number of Samples tested	:	One
Date(s) of test(s)	:	21.02.2012
CPRI Sample Code no(s)	:	UHV12S0039
Particulars of test conducted	:	Radio interference voltage (RIV) test
Standard/ Specification	:	IEC: 62271 – 100 / 2008
Sampling plan	:	Not applicable
Customer's requirement	:	Nil
Deviations if any	:	Nil
Name of the witnessing persons		
Customer representatives	:	1) Mr. Lalit Mahale 2) Mr. Santosh Gundap
Other than customer's representatives	:	Nil
Test subcontracted with address of the Laboratory	:	Nil
Documents constituting this report (in words)		
Number of sheets	:	Four
Number of oscillogram/s	:	Nil
Number of graphs	:	One
Number of photos	:	Nil
Number of test circuit diagrams	:	One
Number of drawings	:	Four

(K. A. ARAVIND)
Test Engineer

(Dr. D. DEVENDRANATH)
Joint Director

UHV Research Laboratory
P.O. Box No. 9, Medipally, P.O.
Warangal Highway, Hyderabad - 500 098. (India)
Phones : +91 (0) 40-27203622, 27201724, 27203112, 27204701, Fax : 040-27203378
E-mail : uhvrl@cpri.in

CENTRAL POWER RESEARCH INSTITUTE

CPRI

Test Report Number : **UHV / T / 378** **Date: 22.02.2012**

MOUNTING ARRANGEMENTS & TEST CONNECTIONS DURING TEST:

Mounting arrangements: The sample was mounted at outdoor as per GA drawing: 3949627 R0
Reference Drawing Nos: 1) 4,94,9632 R0 2) 2940037 R3 3) 3943042 R1

Test connections:

Test Connection No.	Status of Breaker	HV Connected to	Earthed terminals
1	Closed	Bb	Aa, Cc, F
2	Open	B	Aa, Cc, b & F
3	Open	b	Aa, Cc, B & F

F- Frame of the circuit breaker, SF_6 Gas Pressure: 6.2 kg/cm^2 (gauge) @ 30°C

AMBIENT CONDITIONS:

Test	Temperature in Degree Celsius		Atmospheric pressure in kPa
	Dry bulb	Wet bulb	
Radio interference voltage (RIV) test	30	24	95.73

TEST PROCEDURE: IEC: 62271 – 100 / 2008.

Test Engineer

UHV Research Laboratory
P.O. Box No. 9, Medipally, P.O.
Warangal Highway, Hyderabad - 500 098. (India)
Phones : +91 (0) 40-27203622, 27201724, 27203112, 27204701, Fax : 040-27203378
E-mail : uhvrl@cpri.in

CENTRAL POWER RESEARCH INSTITUTE

CPRI

Test Report Number : **UHV / T / 378** **Date: 22.02.2012**

RESULTS & OBSERVATIONS:

TEST 1: Radio interference voltage (RIV) test

Applicable additional standard CISPR 18-2/1986
Detector: Quasi Peak Measuring frequency: 1MHz,
RIV test voltage specified by the customer: 92.1 kV (RMS)

Test Voltage kV(RMS)	RIV level in µV across 300 Ω		
	Test connection no. 1	Test connection no. 2	Test connection no. 3
92.1*	495.5	495.5	495.5
83.7	473.2	478.6	489.8
75.4	473.2	462.4	473.2
67.0	451.9	441.6	451.9
58.6	441.6	412.1	384.6
50.2	421.7	384.6	358.9
47.9	402.7	358.9	342.8
33.5	384.6	346.7	335.0
25.1	375.8	335.0	323.6
Ambient RIV	190.5	190.5	213.8

* Preconditioned for 5 minutes

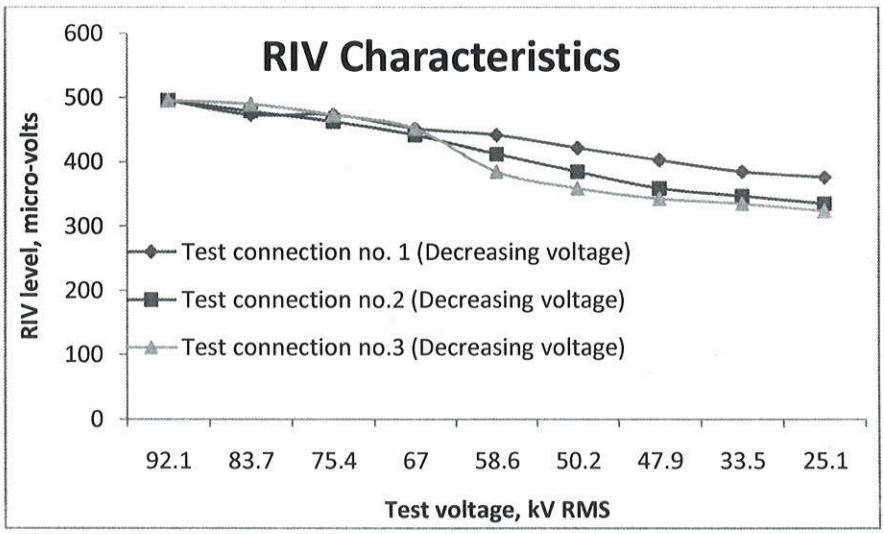

The RIV level at the specified RIV test voltage of 92.1 kV RMS is less than 500 µV

Test Engineer

UHV Research Laboratory
P.O. Box No. 9, Medipally, P.O.
Warangal Highway, Hyderabad - 500 098. (India)
Phones : +91 (0) 40-27203622, 27201724, 27203112, 27204701, Fax : 040-27203378
E-mail : uhvrl@cpri.in

CENTRAL POWER RESEARCH INSTITUTE

CPRI

Test Report Number : **UHV / T / 378** **Dated: 22.02.2012**

TEST CIRCUIT DIAGRAM

Radio interference voltage (RIV) test

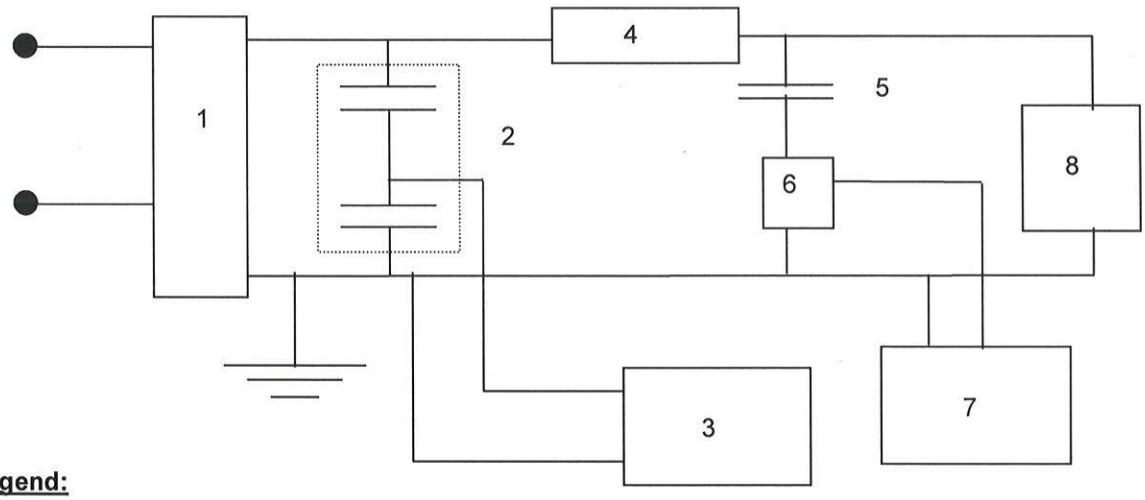

Legend:

1: AC Transformer
2: Voltage Divider
3: RMS Voltmeter
4: RF Rejection Coil
5: Coupling Capacitor
6: Impedance Box
7: EMI Test receiver
8: Test Sample

NOTE

a) The test results relate only to the item(s) tested.

b) Publication or reproduction of the test report /Certificate in any form other than by complete set of the whole test report /Certificate and in the language written is not permitted without the written consent of CPRI.

c) Any Corrections/ erasure invalidates the test report /Certificate

d) NABL has Accredited this laboratory as per ISO 17025:2005 standard for the tests carried out.

e) Any anomaly / discrepancy in the test report /Certificate should be brought to the notice of CPRI within 45 days from the date of issue.

Test Engineer

Sheet 04 of 04

UHV Research Laboratory
P.O. Box No. 9, Medipally, P.O.
Warangal Highway, Hyderabad - 500 098. (India)
Phones : +91 (0) 40-27203622, 27201724, 27203112, 27204701, Fax : 040-27203378
E-mail : uhvrl@cpri.in

R0

DRG.NO:- 3949627

IF IN DOUBT ASK

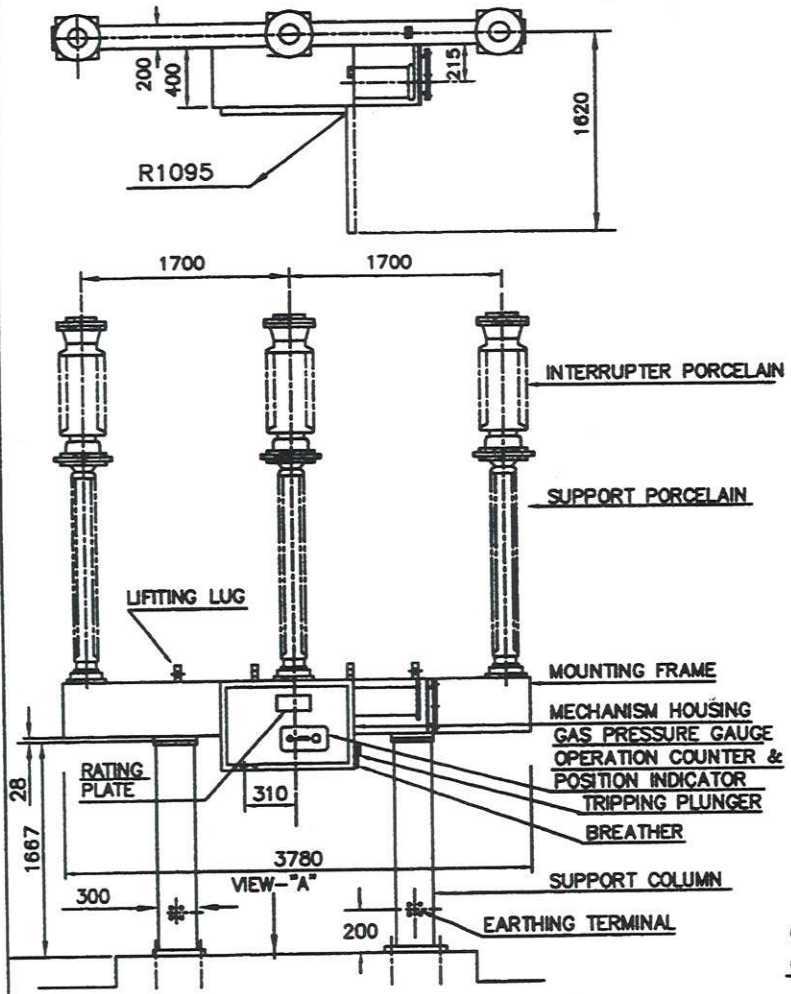

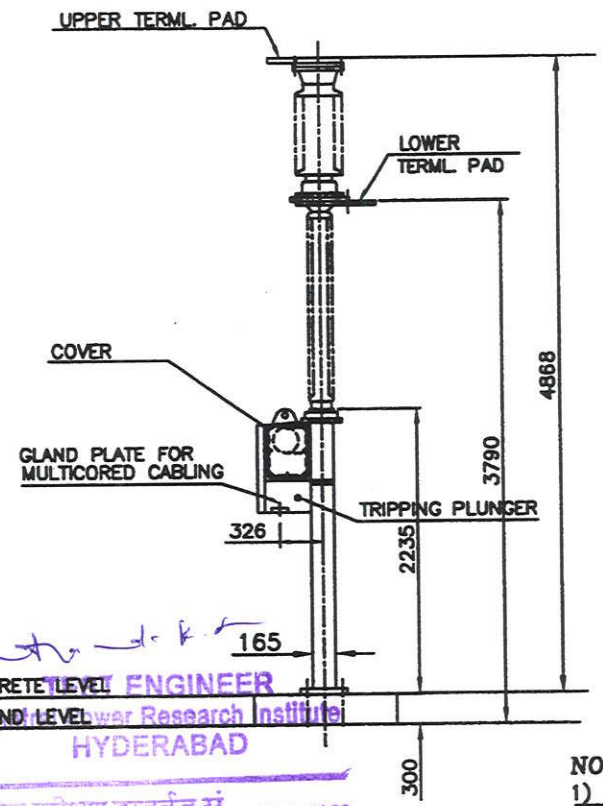

NOTE:- ON BOTH CONNECTING SURFACE OF TERMINAL PADS AND TERMINAL FLANGE WITH SAND PAPER AND COAT SUPPLIED COMPOUND BEFORE CONNECTING.

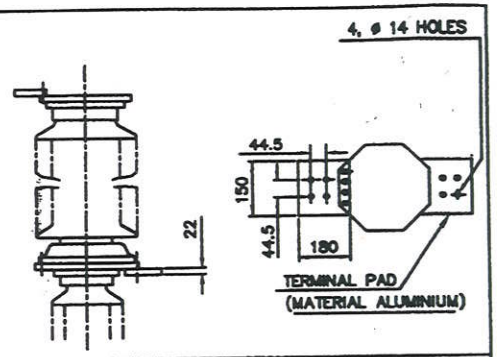

DETAIL OF UPPER AND LOWER TERMINAL PADS

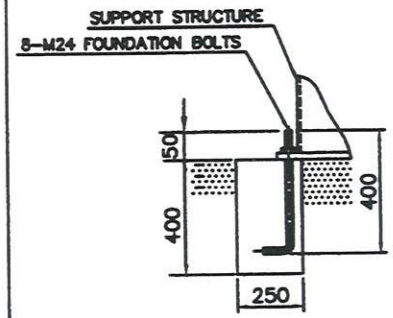

DETAIL OF FOUNDATION BOLT

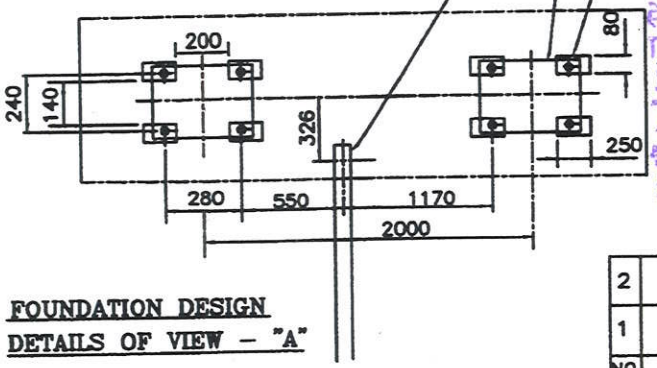

FOUNDATION DESIGN
DETAILS OF VIEW - "A"

NOTE :-

1) TOTAL WEIGHT INCLUSIVE OF COLUMN:-1450Kg.(APPROX.)
2) TOTAL GAS WEIGHT :-6 Kg. (APPROX.) .
3) MAXIMUM SHOCK LOAD DURING OPERATION :-2000 Kg.
4) FINISH :- ALL EXPOSED FERROUS PARTS ARE PAINTED WITH SHADE 631 OF IS:5
5) CREEPAGE DISTANCE: 3625mm
6) HARDWARES EXPOSED TO ATMOSPHERE ARE H.D.G./S.S.

CHIEF ENGINEER
Central Power Research Institute
HYDERABAD

यह चित्र परीक्षण दस्तवेज सं. ..... से संबंधित है
This drawing pertains to Test report No UHV/T/378 dt. 22.02.2012

इस चित्र का साक्ष्यांकन किया की जांच तक ही सीमित है
Attestation of drawing is limited to the checking of dimensions only

NO	REVISION	SIGN	DATE		SIGN	NAME
2				DRN		HCJ
1				CHD		SSS
				APPD		SSS
				SCALE	N.T.S.	DATE:28/03/11

THIRD ANGLE PROJECTION

GENERAL ARRANGEMENT FOR 145KV-40KA SP SP SINGLE STACK GCB

Crompton Greaves Ltd.
SWITCHGEAR DIVISION 33
AMBAD, NASHIK.

DRG.NO. 3949627 R0

All information contained in this document is confidential and should not be used without prior consent of CROMPTON GREAVES LTD.

DRG. NO.: 4,94,9632 | R0

IF IN DOUBT ASK

Crompton Greaves Ltd.
SWITCHGEAR DIVISION S3
AMBAD, NASHIK.

GAS CIRCUIT BREAKER

TYPE 120-SFM-32B		SR. NO. : [redacted] YEAR 2011	
RATED VOLTAGE	145 KV	RATED FREQUENCY	50 Hz
RATED NORMAL CURRENT	3150 A	RATED MAKING CAPACITY	100 KAp
RATED SHORT CIRCUIT BREAKING CURRENT	40 KA	RATED SHORT TIME CURRENT 40 KA FOR 3 SECONDS	
RATED LIGHTNING IMPULSE WITHSTAND VOLTAGE	650 KVp	FIRST POLE TO CLEAR FACTOR	1.5
		RAT.OPR.SEQ. O-0.3SEC-CO-3MIN-CO	
RATED GAS PRESSURE	7 kg/cm^2-g(AT 20°C)	GAS WT 6 Kg	TOTAL WT. 2450 Kg
RATED COIL VOLTAGE - CLOSING 110 V DC ,TRIPPING 110 V DC			
MOTOR VOLTAGE 230 V AC/DC		AUX CIRCUIT VOLTAGE 1ø,230V AC,50/60 Hz.	
REF.STD.IEC-62271-100			

TEST ENGINEER
Central Power Research Institute
HYDERABAD

यह चित्र परीक्षण दस्तवेज सं.
से संबंधित है
This drawing pertains to Test report No
UHV/T/378 dt 22.02.2012

इस चित्र का साक्ष्यांकन डिमा की जांच तक
ही सीमित है
Attestation of drawing is limited
to the checking of dimensions only

MATERIAL : STAINLESS STEEL 0.5THK

NO	REVISION	SIGN	DATE
4			
3			
2			
1			

	SIGN	NAME
DRN		HCJ
CHD		SSS
APPD		SSS
DATE	30.03.11	
SCALE	NTS	
THIRD ANGLE PROJECTION		

ALL DIMENSIONS ARE IN mm

RATING PLATE DETAILS
FOR 145 kV-40KA SP-SPR
GCB-TYPE-120-SFM-32B

Crompton Greaves Ltd.
SWITCHGEAR DIVISION S3
AMBAD, NASHIK.

DRG. NO.: 4,94,9632 | R0

All information contained in this document is confidential and should not be used without prior consent of CROMPTON GREAVES LTD.

DRG.NO:– 2940037 R3

IF IN DOUBT ASK

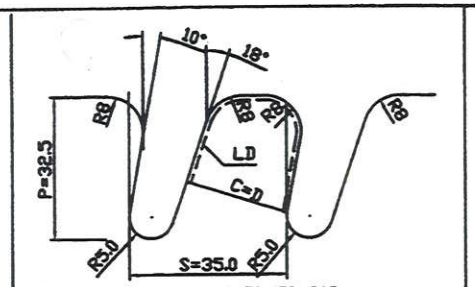

SHED PROFILE CONFIRMING TO IEC–815
MANUFACTURER TO GIVE DIMENSIONS & CALCULATIONS.
(FOR REF. ONLY)

NOTES :

1. UNSPECIFIED TOLERANCES AS PER IS : 5621–1980 & IEC 62155–2003
2. MINIMUM NOMINAL CREEPAGE DISTANCE – 2900mm
3. PARALLELISM BETWEEN END SURFACES OF UPPER AND LOWER FLANGES – LESS THAN 0.5mm.
4. PARALLELISM BETWEEN END SURFACES OF PORCELAIN AND FLANGES – LESS THAN 0.25mm.
5. CONCENTRICITY BETWEEN UPPER AND LOWER FLANGES – LESS THAN 1.5mm
6. CONCENTRICITY BETWEEN FLANGES AND PORCELAIN – LESS THAN 2.0mm
7. ANGULAR MISMATCH BETWEEN MATING HOLES OF UPPER AND LOWER FLANGES –LESS THAN 2.0mm
8. OTHER ROUTINE AND ACCEPTANCE TESTS AS PER IS:5621–1980 & IEC 62155–2003
9. SHED PROFILE SHALL BE AS PER IEC–815–1986
10. MINIMUM CEMENTING THICKNESS 4mm UNDER ANY CONDITION OF WARPAGE & SHELL O.D. VARIATION.
11. COLOUR OF PORCELAIN – BROWN
12 FLANGES SHALL BE ANODIZED
13. AL PORCELAIN ARE TO BE INSPECTED FOR CAMBER USING INSPECTION GAUGE SHOWN BELOW.
14. MATERIAL SPEC. AS PER SP–09
15. VISUAL DEFECTS AS PER IEC–62155–2003

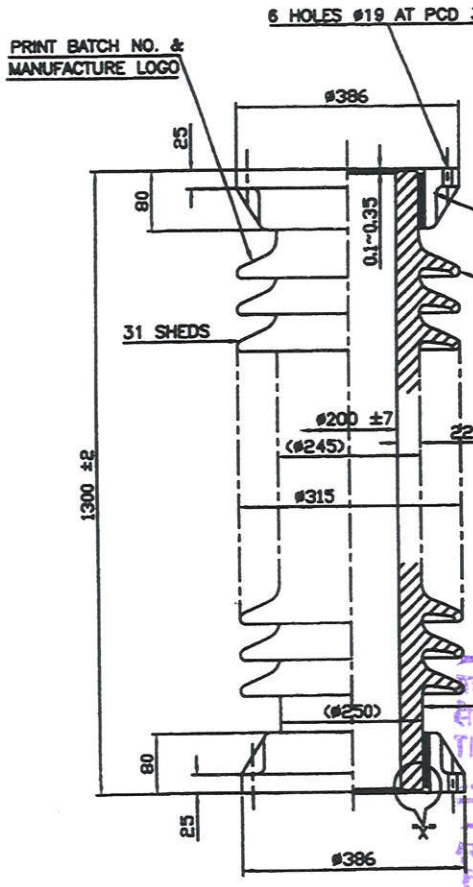

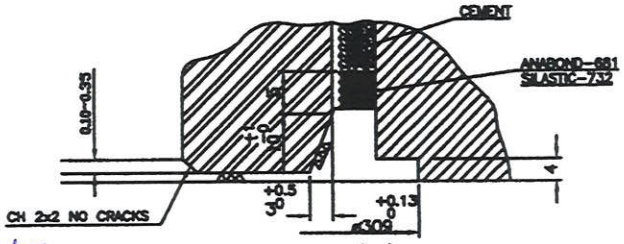

DETAIL–'X'

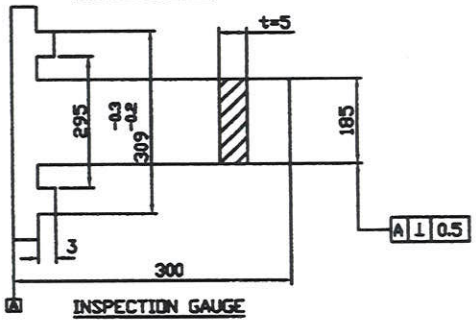

INSPECTION GAUGE

ROUTINE TEST:

1. DIMENSION & VISUAL INSPECTIONS.
2. DYE PENTRATION TEST ON GROUND SURFACE OF PORCELAIN.
3. INTERNAL PRESSURE TEST 20 kg/sqcm FOR 5 MINUTES.
4. DI–ELECTRIC TEST.
5. 4 WAY BEND TEST 985 kg–m.
6. ULTRASONIC TEST ON GROUND SURFACE OF PORCELAIN.

ACCEPTANCE TEST:

1. DIMENSIONAL & VISUAL INSPECTIONAL.
2. TEMP CYCLE TEST AS PER IEC–62155–2003
3. BURST PRESSURE TEST 40 kg/sqcm FOR 5 MINUTE
4. 4 WAY BEND TEST 1970 kg.
5. POROCITY TEST AS PER IEC–62155–2003
6. CEMENT CUBE TEST 300 kg./sqcm.

TYPE TEST:

1. REPEATED BENDING TEST AT 1379 kg FOR 50 CYCLES.

TEST ENGINEER
Central Power Research Institute
HYDERABAD

इस चित्र परिशिष्ट दस्तावेज सं.
से सत्यापित
This drawing pertains to Test report No
UHV/T/1378 dt. 22.02.2012

इस चित्र का सत्यापन बिमा की जांच तक ही सीमित है
Attestation of drawing is limited to the checking of dimensions only

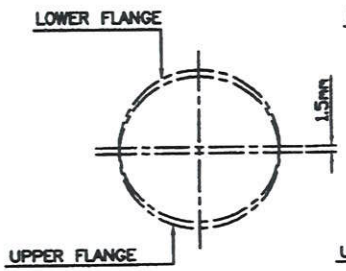

CONCENTRICITY

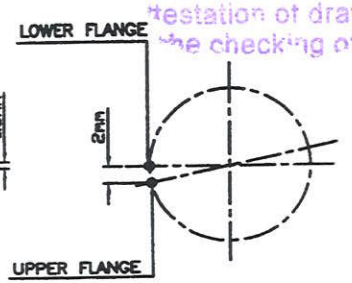

ANGULAR MISMATCH

FIT THE GAUGE INTO THE HOLE ø309 $^{+0.130}_{0}$ OF UPPER & LOWER FLANGES & THE GAUGE SHALL BE FREE TURN ANY DIRECTION

ITEM	QTY.	DESCRIPTION	MATL.		DRG./DWN	WT.Kg	REMARKS.
3	–	CEMENT	PORTLAND CEMENT				
2	2	FLANGES	AL–ALLOY DIE CASTING		3940044	11	Gr LM25 CONDN TB7
1	1	PORCELAIN	PORCELAIN			80	

NO	REVISION	SIGN	DATE
3	IEC NO CORRECTED.	SNR 6.4.11	
2	Shed profile details added		
1	flange to shell depth was 0.15 to 0.35.note.9 modified & note 14,15 added.		

	SIGN	NAME
DRN		ASV
CHD		SSK
APPD		SSK
DATE	21/6/98	
SCALE	NTS	
NAME		

THIRD ANGLE PROJECTION

INTERRUPTER PORCELAIN

120–SFM–32B

Crompton Greaves Ltd.
SWITCHGEAR DIVISION S3
AMBAD, NASHIK.

ALL DIMENSIONS ARE IN mm. DRG.NO.:– 2940037 R3

R1 | USED ON:-

DRG.NO:- 3943042

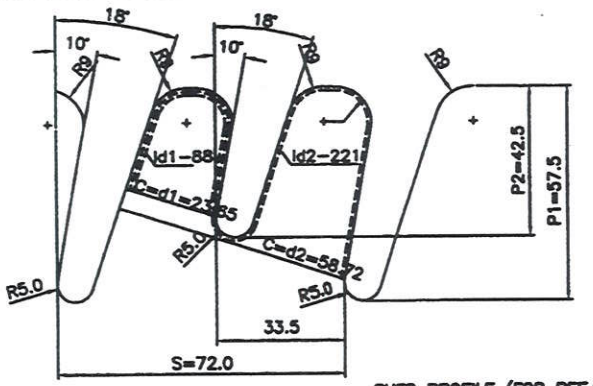

SHED PROFILE (FOR REF.ONLY.)

1	C = d1 /C = d2	d1=23.65 d2=58.72
2	$\frac{Id1}{d1}$ $\frac{Id2}{d2}$ = $\frac{88}{23.65}$ $\frac{221}{58.72}$	3.44,3.5
3	S/P S=72 P=57.5	1.25
4	Average dia. Dm	185
5	Inclination Of Shed	top 18° bottom 10°
6	Profile factor $\frac{2P1+2p2+S}{\frac{115+85+75}{243.46}}$	1.13
7	Creepage factor = $\frac{l1}{S1}$ = $\frac{3700}{1170}$	3.16
8	Form factor = $\frac{\text{Total CD}}{\pi Dm}$ $\frac{3700}{3.14 \times 185}$	6.36
9	Net Weight (approx.)	74 Kg

NOTES :

1. UNSPECIFIED TOLERANCES AS PER IS : 5621-1980 & IEC 62155-2003
2. MINIMUM NOMINAL CREEPAGE DISTANCE - 3700mm
3. PARALLELISM BETWEEN END SURFACES OF UPPER AND LOWER FLANGES - LESS THAN 0.5mm.
4. PARALLELISM BETWEEN END SURFACES OF PORCELAIN AND FLANGES - LESS THAN 0.25mm.
5. CONCENTRICITY BETWEEN UPPER AND LOWER FLANGES - LESS THAN 1.5mm(MAX)
6. CONCENTRICITY BETWEEN FLANGES AND PORCELAIN - LESS THAN 2.0mm.(MAX)
7. ANGULAR MISMATCH BETWEEN MATING HOLES OF UPPER AND LOWER FLANGES -LESS THAN 2.0mm.
8. OTHER ROUTINE AND ACCEPTANCE TESTS AS PER IEC:62155-2003 & IEC 62155-2003
9. SURFACE MARKED WW TOBE GROUND SMOOTH AND PARALLEL TO EACH OTHER.
10. MINIMUM CEMENTING THICKNESS 4mm UNDER ANY CONDITION OF WARPAGE & SHELL O.D. VARIATION.
11. CAMBER AS MEASURED BY STRING OVER SHED 4mm MAX.
12. SHED PROFILE AS PER IEC:815-1986
13. VISUAL DEFECTS AS PER IEC:62155-2003
14. MATERIAL SPEC'S AS PER SP-09

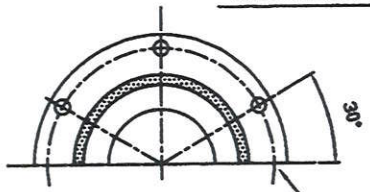

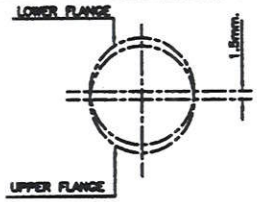

CONCENTRICITY

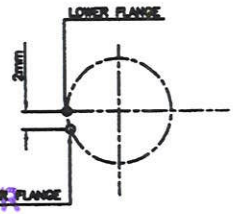

ANGULAR MISMATCH

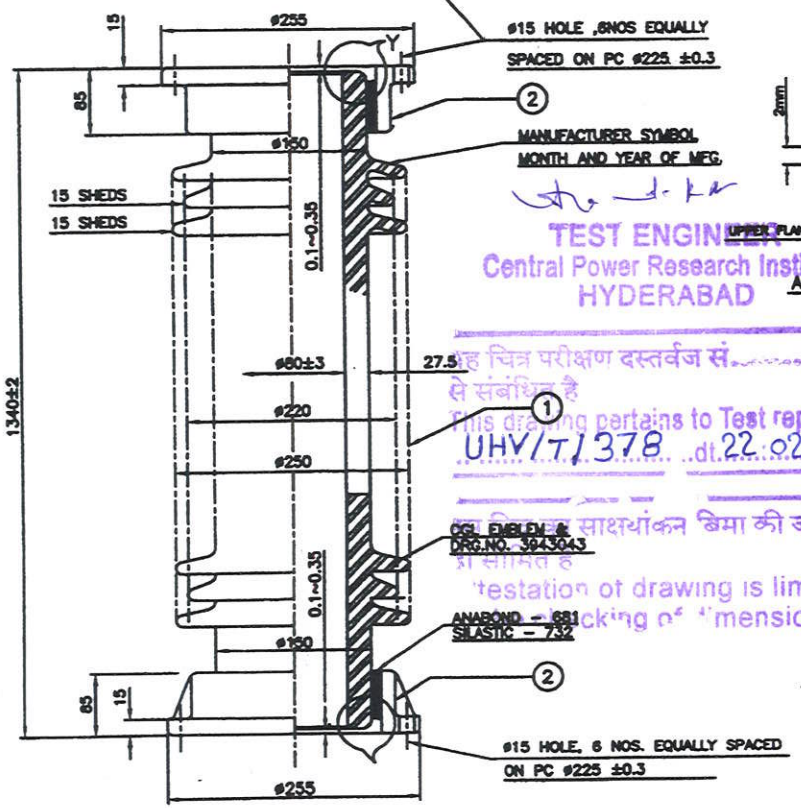

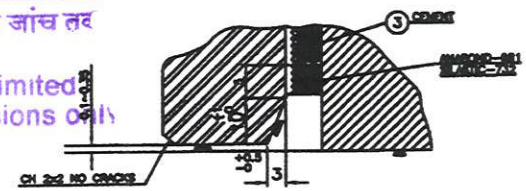

DETAIL-'X'

ROUTINE TEST:

1. DIMENSION & VISUAL INSPECTION.
2. DYE PENTRATION TEST GROUND ON SURFACE OF PORCELAIN
3. INTERNAL PRESSURE TEST 20kg/cm2 FOR 5 MINUTES.
4. DI-ELECTRIC TEST AS PER IEC-62155-2003
5. 4 WAY BEND TEST 790 kg-m.
6. ULTRASONIC TEST ON GROUND SURFACE OF PORCELAIN.

ACCEPTANCE TEST:

1. DIMENSIONAL & VISUAL INSPECTION.
2. TEMP CYCLE TEST AS PER IEC-62155-2003
3. BURST PRESSURE TEST 40 kg/cm2 FOR 5 MINUTE.
4. 4 WAY BEND TEST 1580 kg-m
5. POROCITY TEST AS PER IEC-62155-2003
6. CEMENT CUBE TEST 300kg./cm2

TYPE TEST:

1. REPEATED BENDING TEST AT 1106 kg-m FOR 50 CYCLES.

TEST ENGINEER
Central Power Research Institute
HYDERABAD

यह चित्र परीक्षण दस्तवेज सं.....
से संबंधित है
This drawing pertains to Test report No
UHV/T/378 dt. 22.02.2012

साक्षयांकन बिमा की जांच तद
से सीमित है
Attestation of drawing is limited
to checking of dimensions only

CODE NO: 940111325

ITEM	QTY.	DESCRIPTION	MATL.	DRG./DIMN.	WT.	REMARKS
3	-	BINDING MATERIAL	PORTLAND CEMENT			
2	2	FLANGE	SG 400/15	3.94.0043		
1	1	PORCELAIN SHELL	IS:1865			

			SIGN	NAME
		DRN		NVM
		CHD		SSS
		APPD		PDG
		DATE		16.06.09
		SCALE		NTS

THIRD ANGLE PROJECTION
SUPPORT PORCELAIN (A/S)
SINGLE STACK FOR 145KV SP-SP
SCB

Crompton Greaves Ltd.

NO	REVISION	SIGN	DATE
1	IEC NO CORRECTED.	SNR	6.4.11

ALL DIMENSIONS ARE IN mm

DRG.NO.:- 3943042 R1

IF IN DOUBT ASK

All information contained in this document is confidential and should not be used without prior consent of CROMPTON GREAVES LTD.