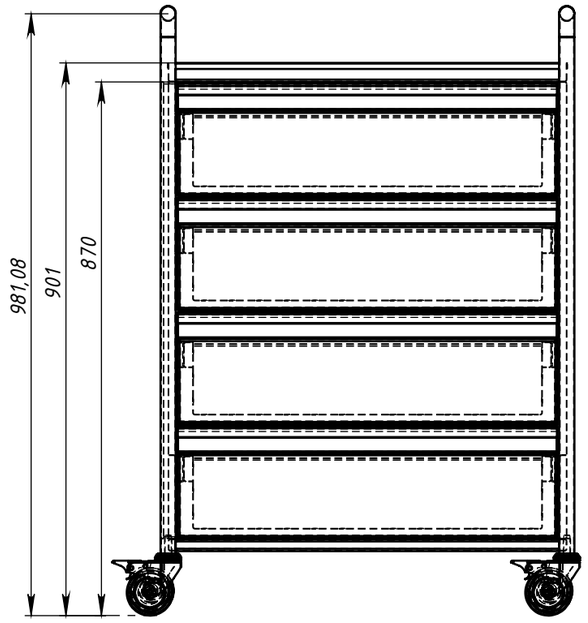

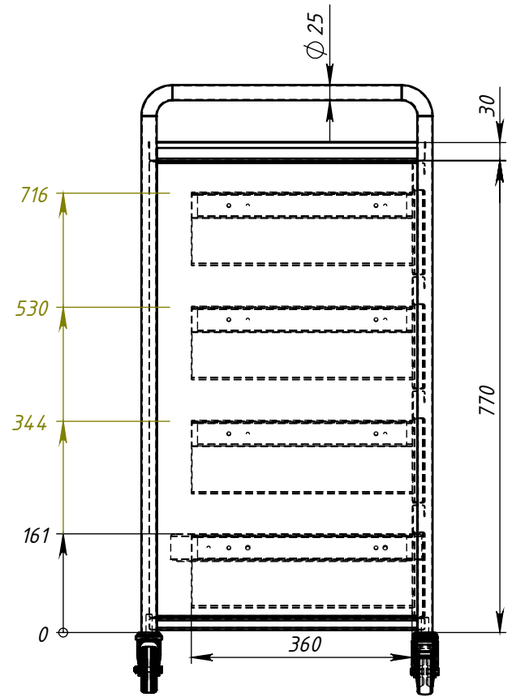

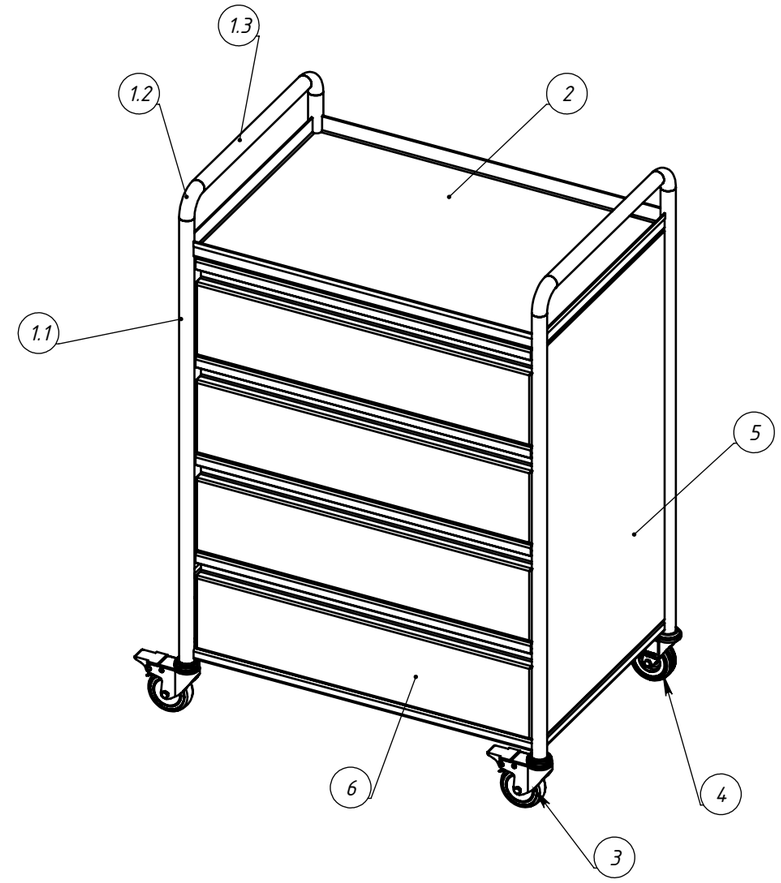

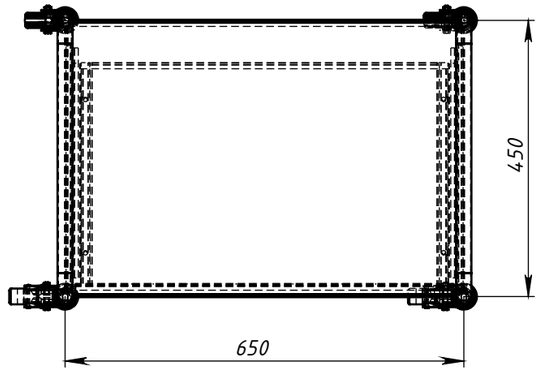

ПОЗИЦИЯ	ОБОЗНАЧЕНИЕ	ОПИСАНИЕ	ДЛИНА	К-ВО
1	Carcasa 450			2
1.1		Teava Ø 25x1.5	842	2
1.2		Cot Ø 25x1.5	90°	2
1.3		Teava Ø 25x1.5	374	1
2	Polita 650x450	S1.0		1
3	Roata 80 fr			2
4	Roata 80			2
5	Laterala	S0.8		2
6	1Sertar			4
7	Laterala gls			1
8	MirrorLaterala gls			1
9	Spate	S0.8		1
10	Laterala jos	S0.8		2
11	Spate jos	S0.8		2

№	
Client	_
Inginer	Pleșivțev Artiom
Termen ex.	__.__.2026

Digitally signed by Cobzari-Țurcan Rodica
Date: 2026.07.30 16:27:12 EEST
Reason: MoldSign Signature
Location: Moldova
MOLDOVA EUROPEANĂ

Carucior 650x450x900 cu 4 sertare

METAL EXPERT
TECHNOLOGY