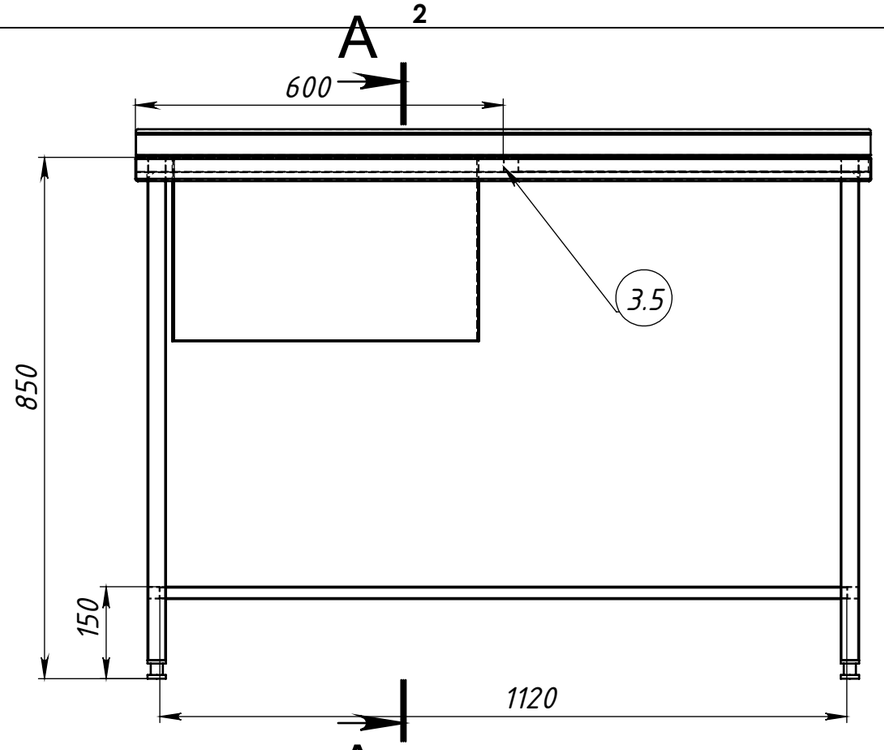

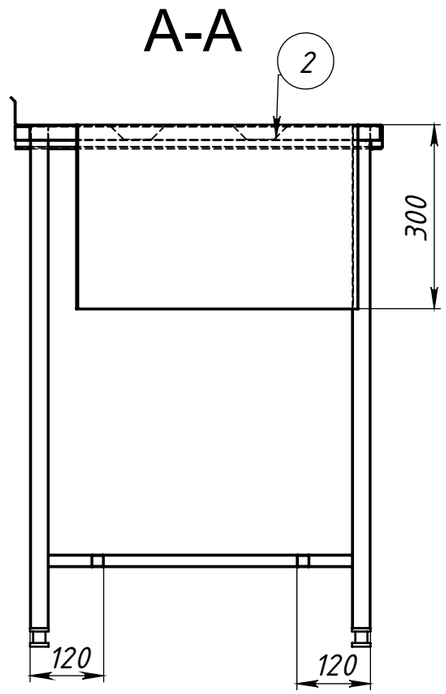

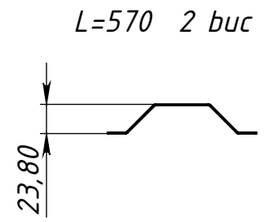

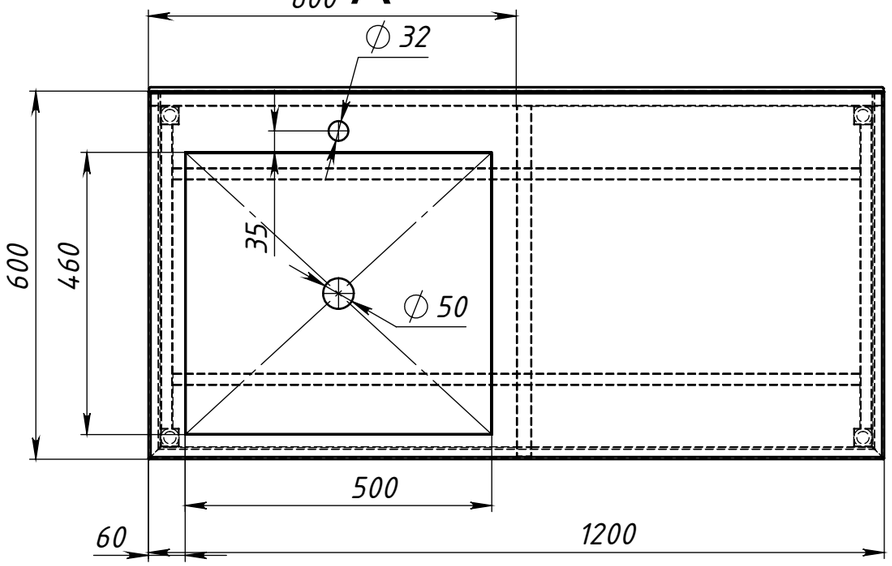

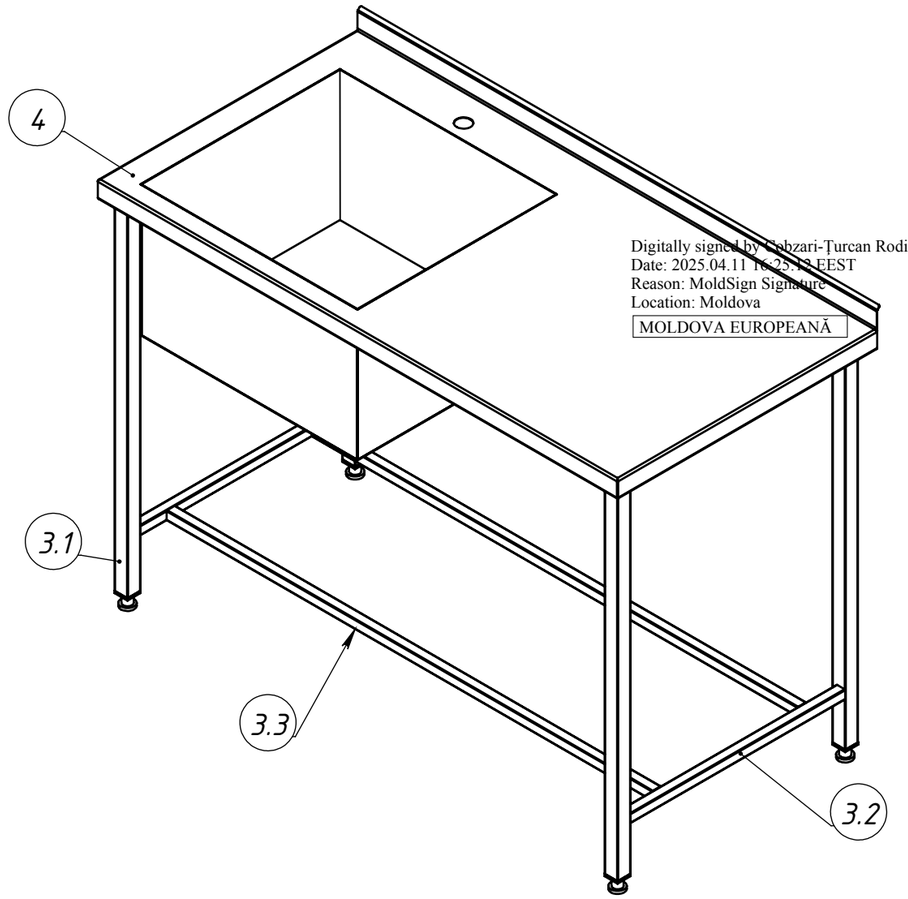

Digitally signed by Cebzari-Țurcan Rodica
Date: 2025.04.11 16:25:13 EEST
Reason: MoldSign Signature
Location: Moldova
MOLDOVA EUROPEANĂ

ITEM NO.	PART NUMBER	DESCRIPTION	ДЛИНА	QTY.
1	picior	Reglabil		4
2	Ranfort 570	S0.8		2
3	Carcas 1200x600x850			1
3.1		Teava profilata 30 X 30 X 1,2	820	4
3.2		Teava profilata 20 X 20 X 1,2	495	2
3.3		Teava profilata 20 X 20 X 1,2	1120	2
3.4		Teava profilata 25 X 25 X 1,2	1197	1
3.5		Teava profilata 25 X 25 X 1,2	570	1
4	Blat 1200x600	S1.2		1
5	500x460x300	S1.2		2

№	
Client	_
Inginer	Pleșivțev Artiom
Termen ex.	__.__.2025

Masa 1200x600x850 cu 1 cuva 500x460x300

METAL EXPERT TECHNOLOGY