Client: USMF

bir. D. valentin Oprea

Dulap –mape

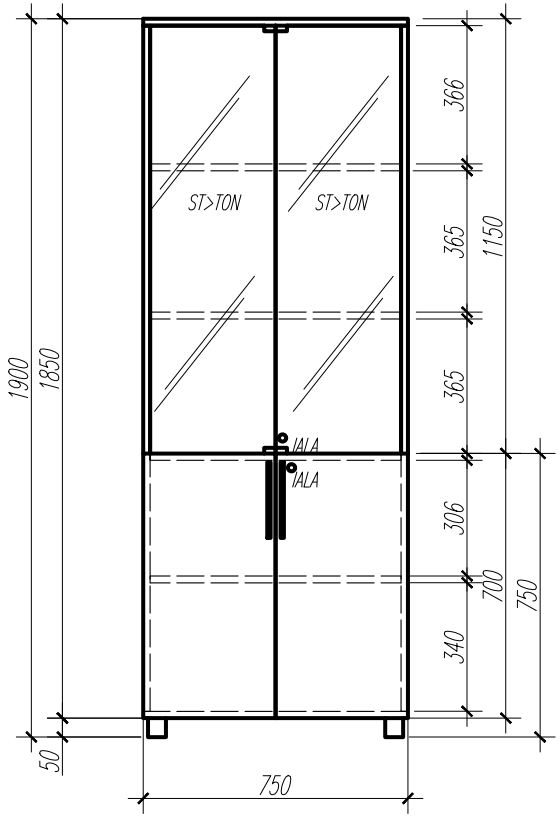

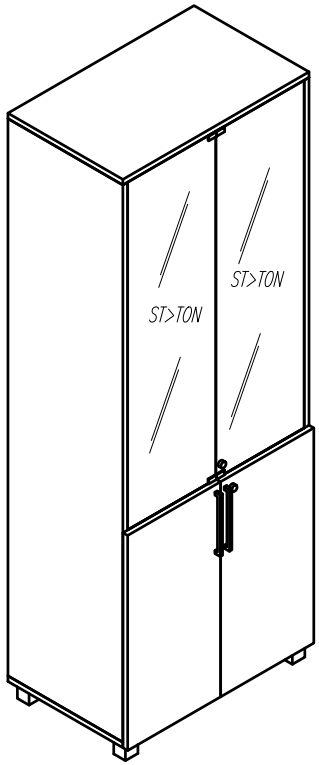

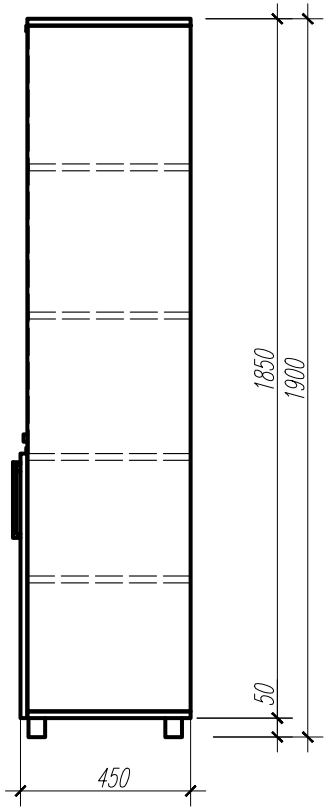

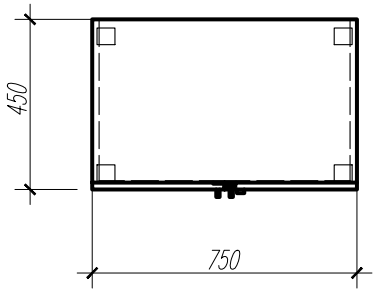

1 buc.