GENERAL TOLERANCE (mm)	TOLERANCE FOR MACHINING DIN 7168 - ISO 2768M							
	3 TO 6	6 TO 30	30 TO 120	120 TO 400	400 TO 1000	1000 TO 2000	2000 TO 4000	4000 TO 8000
PROCESSING	± 0,1	± 0,2	± 0,3	± 0,5	± 0,8	± 1,2	± 2	± 3
FORGING	± 0,2	± 0,5	± 0,8	± 1,2	± 2	± 3	± 4	± 5

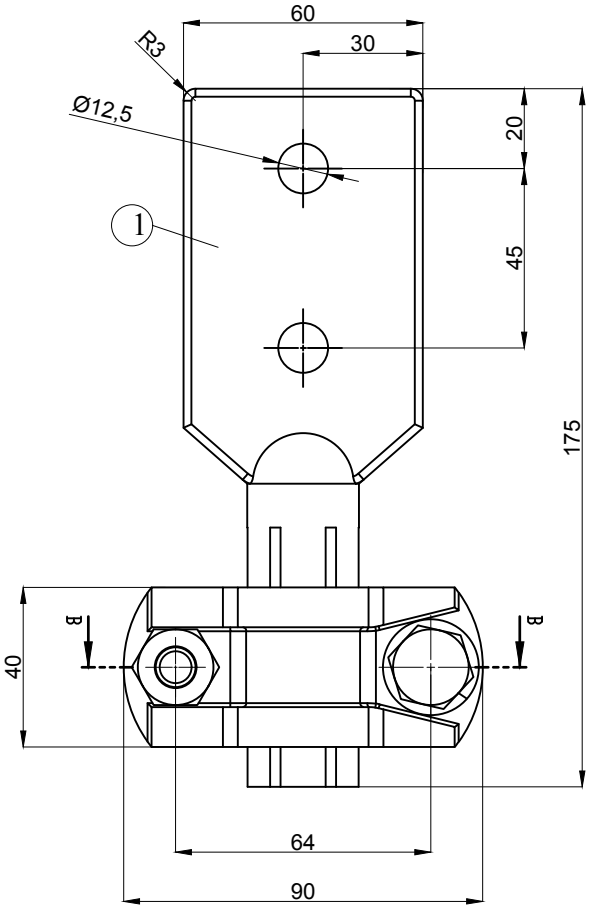

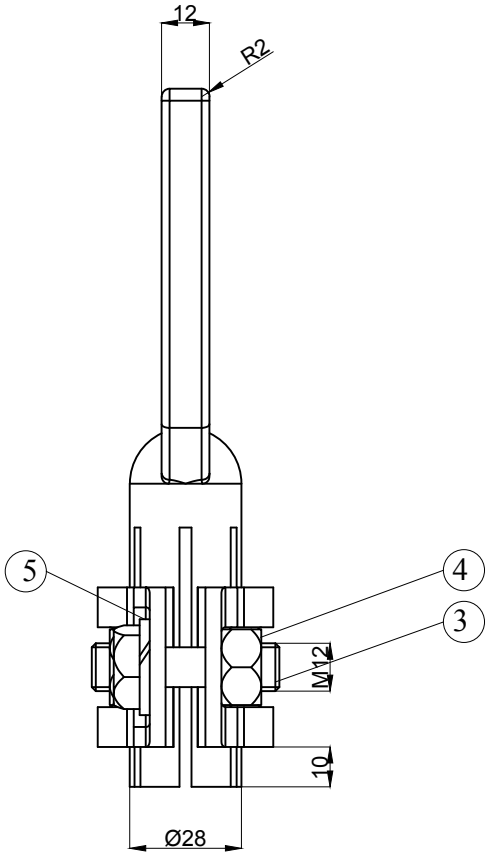

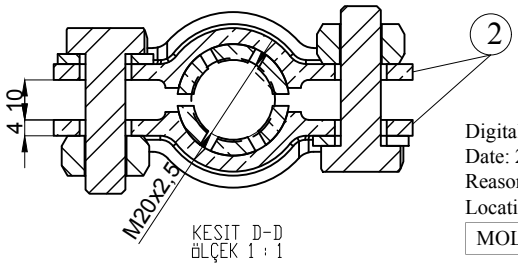

Digitally signed by Habed Gheorghe
Date: 2026.03.05 11:33:07 EET
Reason: MoldSign Signature
Location: Moldova

MOLDOVA EUROPEANĂ

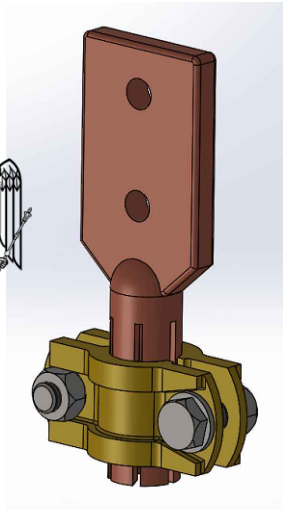

ITEM	DESCRIPTION	PCS	MATERIAL	CODE
1	Spring Washer M12 /DIN 127	2	Stainless Steel	25-RDL-PSL-0000012
4	NUT M12 / DIN 934	2	Stainless Steel	25-SMN-PSL-0000012-K
3	Bolt M12x35 / DIN 933	2	Stainless Steel	25-CVT-PSL-0001235
2	Plate	2	Brass	30-LMA-PRC-090408-O01
1	Flag (Special)	1	Copper	30-BRA-BKR-0017560-O03

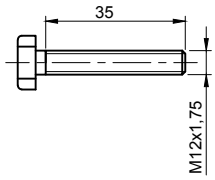

CUTTING ☐	FORGING ☐	MOULDING ☐	PROCESSING ☐	MOUNTING ☐

ANKARA SERAMİK
PORSELEN SAN. ve TİC. A.Ş.
PORCELAIN INDUSTRY OF TURKEY
1.ORGANİZE SAN.BÖL.OSMANLI CAD.
NO:15 SİNCAN/ANKARA/TURKEY
TEL: (0312) 267 37 77 FAX: (0312) 267 27 77
EMAIL:info@ankaraseramik.com

DATE	23.02.2026	MATERIAL		COMPANY NO	
APPROVAL	İ.ÇİLESİZ	STANDART NO			
CONTROL	İ.ÇİLESİZ	REV. NO		NOTE	
DRAWN BY	M.SÖNMEZ	MOLD. NO			
SPECIAL FLAG 630A		CODE NO	30-BRA-BPR-0000630-O53	SCALE	