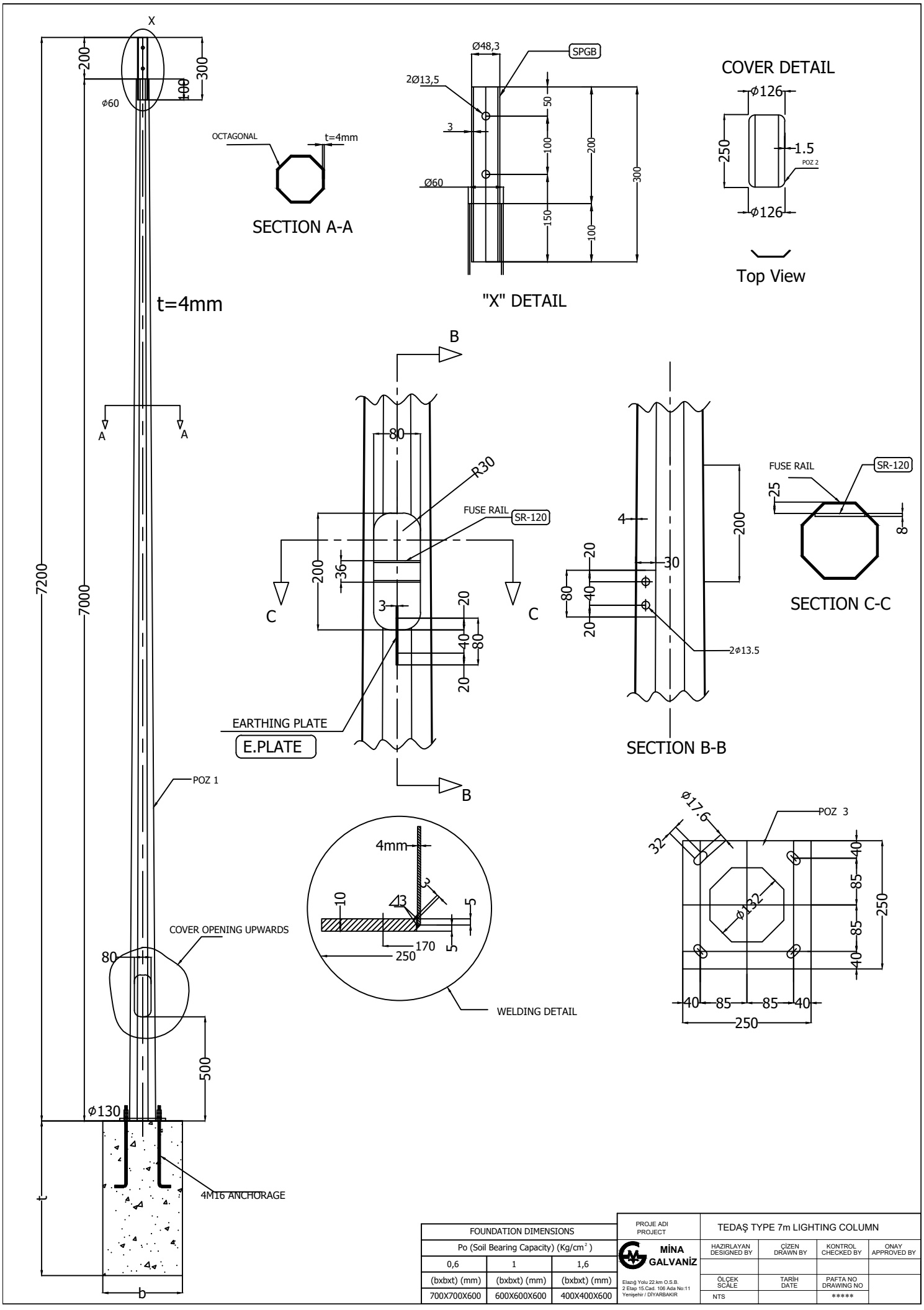

FOUNDATION DIMENSIONS		
Po (Soil Bearing Capacity) (Kg/cm^2)		
0,6	1	1,6
(bxbxt) (mm)	(bxbxt) (mm)	(bxbxt) (mm)
700X700X600	600X600X600	400X400X600

PROJE ADI PROJECT	TEDAŞ TYPE 7m LIGHTING COLUMN		
MİNA GALVANİZ	HAZIRLAYAN DESIGNED BY	ÇİZEN DRAWN BY	KONTROL CHECKED BY	ONAY APPROVED BY
Elazığ Yolu 22.km O.S.B. 2 Etap 15.Cad. 106 Ada No:11 Yenişehir / DİYARBAKIR	ÖLÇEK SCALE	TARİH DATE	PAFTA NO DRAWING NO
	NTS		*****