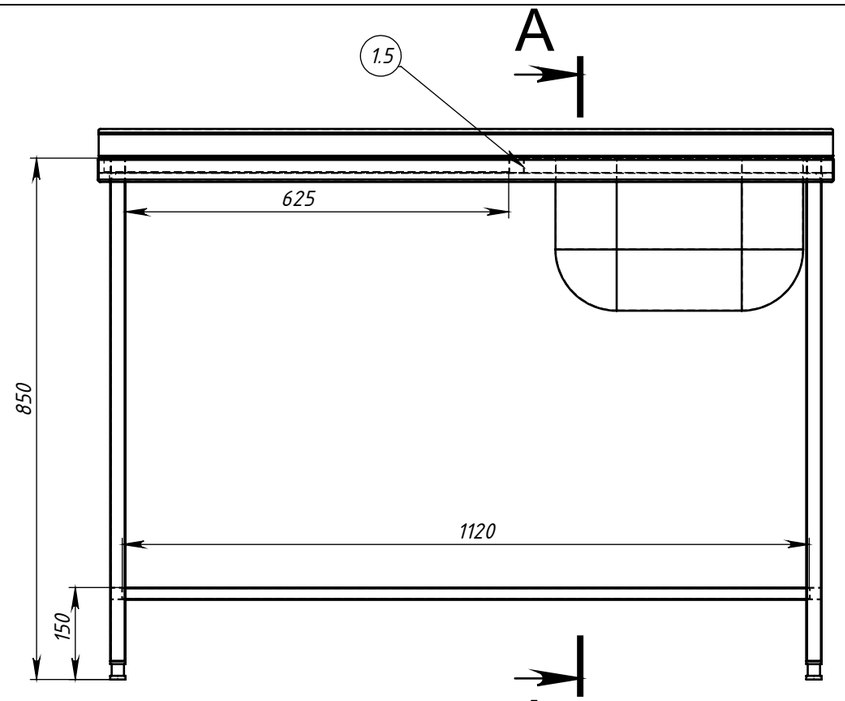

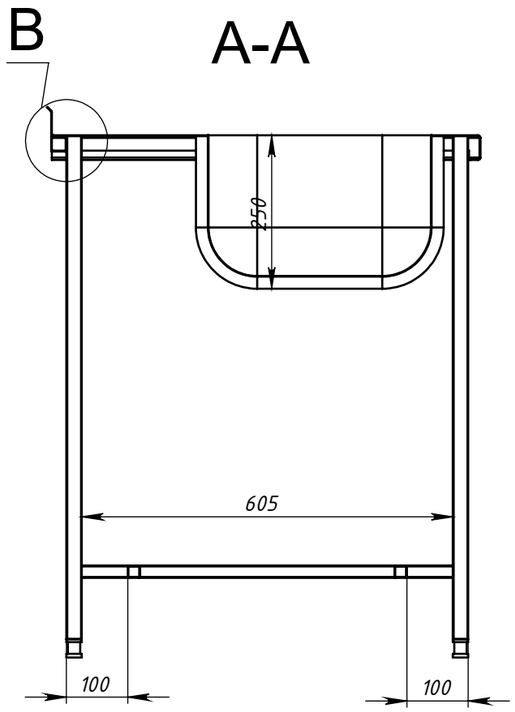

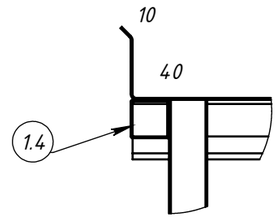

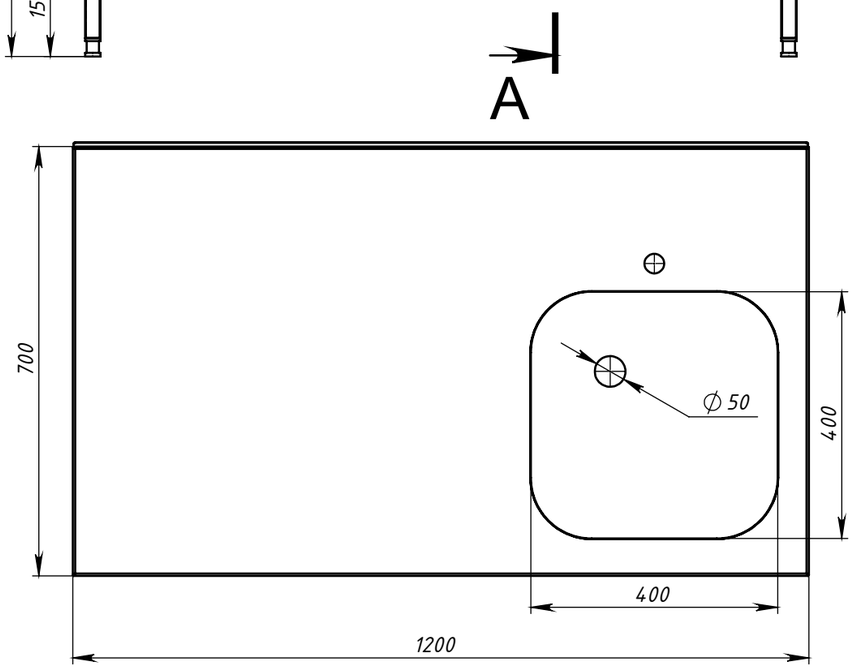

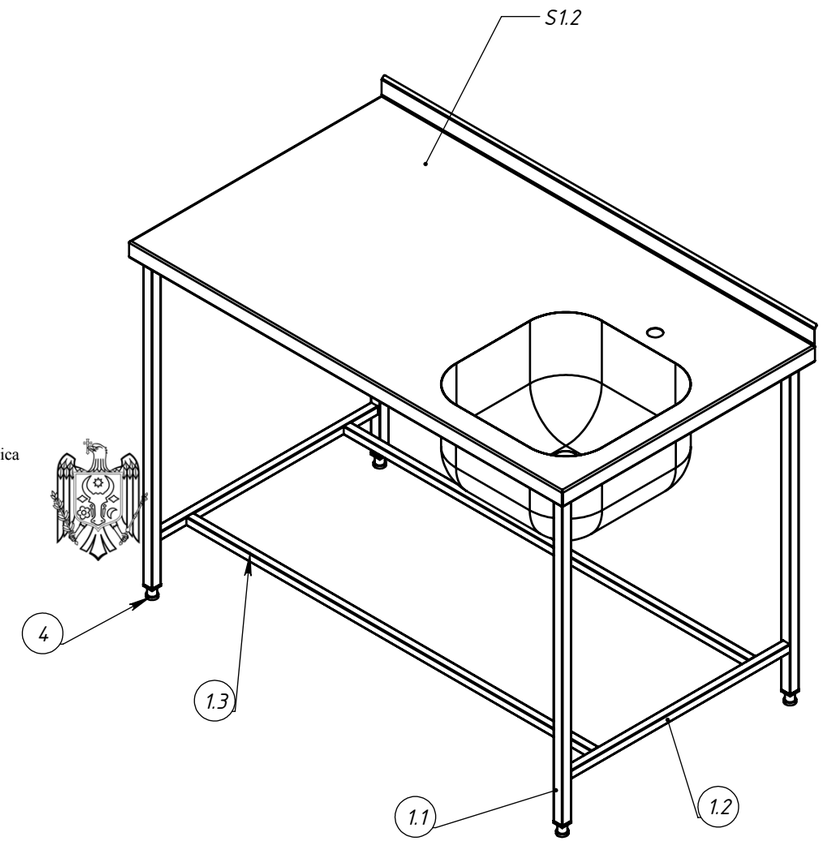

Digitally signed by Cobzari-Țurcan Rodica
Date: 2025.08.21 10:24:17 EEST
Reason: MoldSign Signature
Location: Moldova
MOLDOVA EUROPEANĂ

ITEM NO.	PART NUMBER	DESCRIPTION	ДЛИНА	QTY.
1	Carcas 1200x700			1
1.1		Teava profilata 25 X 25 X 1,2	820	4
1.2		Teava profilata 20 X 20 X 1,2	605	2
1.3		Teava profilata 20 X 20 X 1,2	1120	2
1.4		Teava profilata 25 X 25 X 1,2	1197	1
1.5		Teava profilata 25 X 25 X 1,2	670	1
2	Cuva 400x400x250			1
3	Blat 1200x700	S1.2		1
4	picior	Reglabil		4
5	Ranfort 660	S0.8		2

№	
Client	_
Inginer	Pleșivțev Artiom
Termen ex.	__.__.2025

Masa 1200x700x850 cu 1 cuva 400x400x250

METAL EXPERT TECHNOLOGY