HONJIN

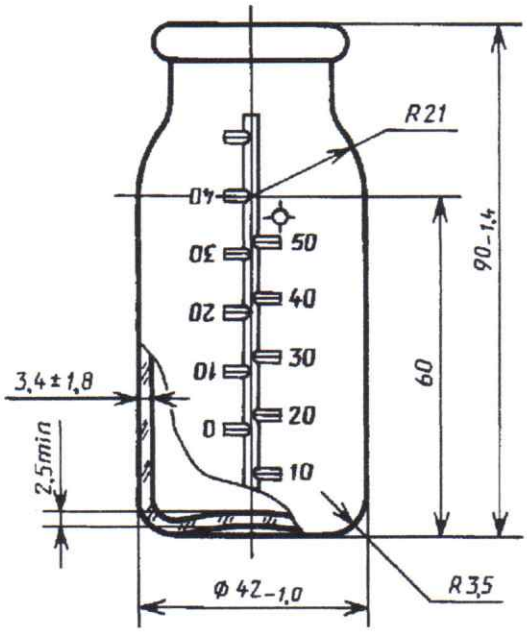

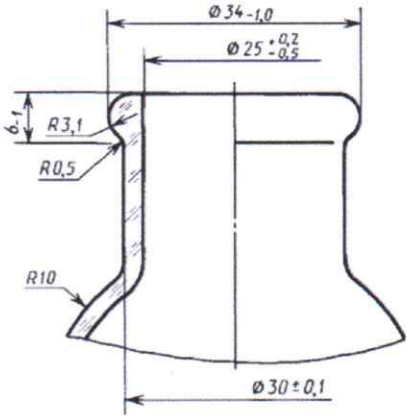

Material		Borosilicate glass – 7.0
Linear thermal expansion coefficient		6.2~7.5x10-6K-1 (20~300°C)
Boron oxide		7.17%
121°C hydrolytic resistance of powdered glass		Grade 1
hydrolytic resistance of interior surfaces		Neutral grade
Size	Volume	50ml
	External diameter of bottle body (d1)	42.0±1.0mm
	External diameter of bottle mouth (d2)	34.0±1.0mm
	Internal diameter of bottle mouth (d4)	25.0±0.2/0.5mm
	Height of bottle (h1)	90.0±1.4mm
	Thickness of mouth edge (h4)	3.6±0.2mm
	Thickness of bottle bottom (s2)	≥2.5mm
Produce basis: ISO8362-1:2009, ISO9001:2015, YBB00302002-2015 standard with Customer's drawing		

Shanxi Hongjin Medical Glass Co.,Ltd			Title:	Moulded glass infusion bottles (Graduated) - 50 ml		
		UNIT:	GEN. TOLERANCE:		SIZE: A4	REV:0
DRAWING BY:	APPROVAL	DEPARTMANTION	NAME - SURNAME	SIGN	DATE	DWG NO: HJ-GB-12/C/50
Hou Mingzhen		FACTORY MANAGER	Yange Wen			FILE:
Date: 2022/09/20		QA / RA	Pei Zhuo			
					SCALE:1/1	PAGE:1

Digitally signed by Ionaşcu Andrei
Date: 2023.11.14 17:20:26 EET
Reason: MoldSign Signature
Location: Moldova

山西宏晋医用玻璃有限公司 SHANXI HONGJIN MEDICAL GLASS CO.,LTD