USER MANUAL

SYRINGE PUMP
(EN-S7 Smart, EN-S7)

Digitally signed by Țurcanu Ștefan
Date: 2022.06.17 10:34:32 EEST
Reason: MoldSign Signature
Location: Moldova

ENMIND

CE 0197

Manufacturer: Shenzhen Enmind Technology Co., Ltd.

Room 201,Block A,No.1,Qianhai Road 1,Qianhaishen Port Cooperative District, Shenzhen, 518000,Guangong,China

Site included: 5th Floor, Block A, Defengsheng Building, No.41 Dabao Road, Bao'an District 23, Shenzhen, 518101, P.R.China

TEL: +86 755 2331 6007

Authorized representative in the European Community: Shanghai International Holding Corp. GmbH (Europe)

Address: Eiffestrasse 80, 20537 Hamburg，Germany

Preface

1 Application Scope of the User Manual

Applicable to EN-S7/EN-S7 Smart syringe pumps of our company.

This User Manual describes the product's most complete configuration, accessories and functions which may not exist in the product of the user, for more detailed information, please contact manufacturer.

2 Applicable Object of the User Manual

It is applicable to professional trained nurse, doctor, and maintenance technician of this equipment.

3 Use Instructions

This User Manual covers the basic information on the safety and effectiveness of the product for guiding the operator to correctly install, test, operate, use and maintain the product. Please read this manual thoroughly before use.

Our company is responsible for the reliability and performance of the equipment only all following conditions are met:

- Use the equipment according to this User Manual.
- The equipment can only be disassembled, assembled, replaced, tested, improved and repaired by the professional technicians of our company.
- All components and accessories as well as consumables for repairing are provided by manufacturer.
- Relevant electric devices meet the international standard IEC/EN 60601-1 and this User Manual.

4 Paraphrase

【 】 means mechanical button

『 』 means touch button

( ) further Information

- means inapplicable

√ means accordant

→ means operation steps

Bolus: Infuse large volume of liquid in a short time.

KVO: Keep vein open, prevent blood back to the IV tube and needle blocked.

Anti-bolus: Motor automatically reverse while the IV tube with high pressure.

IrDA: infrared communication

Warning /Attention: it may possibly cause physical injury or death if the cautions covered in the Warning are not obeyed.

Caution: it may possibly cause physical injury or property loss if the cautions are not obeyed.

Note: in case fails to follow the supplementary or prompt information on the operation instructions may possibly cause physical injury the equipment fault or property loss if it is not obeyed.

Accessories: the optional components which are necessary and (or) suitable for using with the equipment in order to achieve the expected purpose, or provide convenience for achieving the expected purpose, or improve the expected purpose, or increase the additional functions of the equipment.

Content

Preface 2

1 Application Scope of the User Manual 2

2 Applicable Object of the User Manual 2

3 Use Instructions 2

4 Paraphrase 2

Chapter1 Safety Instructions 5

1.1 Warnings 5

1.2 Cautions 6

1.3 Dialogue window 7

1.4 Symbols 7

Chapter2 Overview 8

2.1 Application Scope 8

2.2 Contraindications 8

2.3 Working Principle 8

2.4 Structure and Performance 8

2.5 Product Specification 9

Chapter3 Appearance 12

3.1 Left Front View 12

3.2 Right Front View 13

3.3 Operation Panel 14

3.4 Display Screen 15

3.5 Rear View 17

Chapter4 Installation 18

4.1 Unpacking and Checking 18

4.2 Installation 18

Chapter5 Use Preparation and Cautions 19

5.1 Use Preparation 19

5.2 Operation Cautions 19

Chapter6 Basic Operation 20

6.1 Operation Flow 20

6.2 Infusion Operation 20

Chapter7 Set Infusion Parameters 23

7.1 Introduction to Infusion Parameters Setting 23

7.2 Infusion Parameters Setting Range 23

7.3 Infusion Mode Setting 24

Chapter8 System Setting 27

8.1 Settings 27

8.2 General 30

8.3 Patient 32
8.4 Records 33
8.5 System 36
8.6 Electronic Memory Function 36
Chapter9 Alarm Prompt and Troubleshooting 37
9.1 Introduction to Alarm Level 37
9.2 Multi-level Alarm Rules 37
9.3 Alarm Handle 37
9.4 Malfunction Analysis and Solution 37
Chapter10 Maintenance 38
10.1 Cleaning, disinfecting and sterilizing 38
10.2 Periodical maintenance 38
10.3 Add new brand and Calibration 39
10.4 Repair 41
10.5 Equipment Components/Accessories 41
10.6 Production Date 41
10.7 Recycling 41
Chapter11 Battery 42
11.1 Check the Battery Performance 42
11.2 Replaced the Battery 42
Chapter12 After Sale Service 43
Chapter13 Appendix 44
Appendix A Start Up Graphs and Trumpet Curves 44
Appendix B Occlusion Response Property 46
Appendix C Alarm and Solution 47
Appendix D Electro Magnetic Compatibility declaration 49
Appendix E Wireless Module Information 53
Appendix F Factory Default Data Set 54

Chapter1 Safety Instructions

1.1 Warnings

⚠

- Before using, please check the equipment, connecting wire and accessories to ensure that it can work normally and safely. If there's anything abnormal, immediately stop working and contact our after sale service department. Additionally, the adhesion or intrusion of fluid/drug may possibly cause the equipment fault and malfunction. Therefore, please clean the equipment after use, and store it correctly.
- This equipment must be operated by trained professional medical care personnel.
- This equipment **is not applicable** to blood transfusion.
- It is not allowed to put and use the equipment in the environment with anesthetic and other inflammable or explosive articles to avoid fire or explosion.
- It is not allowed to store or use the equipment in the environment with active chemical gas (including gas for disinfecting) and moist environment since it may influence the inside components of the syringe pump and may possibly cause performance drop or damage of the inside components.
- The operator shall guarantee that the set infusion parameters of this equipment are the same as the medical advice before starting infusion.
- Please do not only depend on information prompt during use, please periodically check it to avoid accident.
- Tightly fix this equipment on the infusion stand and ensure the stability of the infusion stand. Be careful when moving the infusion stand and this equipment to avoid the equipment dropping and infusion stand falling or knocking the surrounding objects.
- If the syringe extension tube is twisted, or the filter or needle is obstructed, or blood in the needle which may obstruct the syringe, the pressure in the tube will rise. When removing such occlusion, it may possibly cause "bolus injection" (temporary excess infusion) to the patient. The correct method is to tightly hold or clamp the extension tube near the puncturing position, then loosen the tube, solve the reason of occlusion, and restart infusion. If infusion is restarted when the occlusion reason exists, then it may cause occlusion alarm persistently, and the pressure in the syringe tube may keep rising, and may break or cut off the tube, or hurt the patient.
- This equipment has the occlusion detection function for detecting and alarming when the syringe needle deviates the position in the vein or the needle is not correctly punctured in the vein. However, it only alarms when the occlusion pressure has reached certain numerical value, and the puncturing part may possibly have become reddish, swelling or bleeding, additionally, it is possible that the device doesn't alarm for a long period if the actual occlusion pressure is lower than the alarm threshold value, therefore, please periodically check the puncturing part. If there's any abnormal phenomenon for the puncturing part, please timely take suitable measures, such as puncturing again.
- Only those sterile hypodermic syringes for single use and other medical components that meet the local laws and regulations and the requirements covered in and this User Manual can be adopted, it is suggested to adopt the syringe with same brand as this equipment. It can't ensure the infusion accuracy if the unsuitable syringe is adopted. Please use the syringe and the extension tube with a screw, or may be because of the pipeline pull to cause damage to the patient.
- It is not allowed to disassemble or refit this equipment or use it for other purposes except normal infusion.

- No one is allowed to repair this equipment except our company or the authorized repair technician of our company.
- To avoid risk of electric shock, this equipment must only be connected to AC with Ground protection earth.

1.2 Cautions

⚠

- Before its first use after purchase, or this equipment is not used for a long period, please charge the equipment with AC power supply. If it is not fully charged, under power failure, the equipment can't continue working with built-in battery power supply.
- This equipment can be used in the places with radiological installation or magnetic resonance equipment as well as the places with high pressure oxygen therapy.
- Other devices near this equipment must meet corresponding EMC requirements, otherwise, it may influence the performance of this equipment.
- Under general conditions, please use AC power supply as much as possible since it can prolong the service life of the battery at a certain degree. When using AC power supply, ensure that the grounding wire is reliably connected with the ground, and only the AC power wire attached with this equipment shall be adopted. The built-in battery can only be used as the assistant power supply when the AC power supply can't reliably connect with the ground and is not under normal conditions (power failure or moving infusion).
- Before connecting this equipment with power supply, please keep the power socket and plug dry, and the power voltage and frequency meet the requirements listed in the equipment label or this User Manual.
- The equipment is equipped with the audible and visual alarm system, and the red and yellow alarm indicators will light on by turn to check if the alarm system can work normally, and the speaker makes the "beep" sound.
- Please keep the equipment away from the AC power socket for a certain distance to avoid fluid/drug splashing or dropping in the socket, otherwise, it may possibly cause short circuit.
- Please use the fluid/drug after it has reached or nearly reached room temperature. When the fluid/drug is used at low temperature, the air which is dissolved in the fluid/drug may cause more air bubbles and result in frequent air bubble alarm.
- It is not allowed to press and operate the button with sharp object (such as pencil tip and nail), otherwise, it may possibly cause early damage to button or surface film.
- Under the condition of low flow rate infusion, please pay special attention on occlusion. The lower the infusion flow rate, the longer the time of detecting occlusion, and it in turn may possibly cause a long time infusion stop during this period.
- If the equipment suffered from dropping or impacting, please immediately stop using it, and contact our after sale service department, because the inside components of the equipment may be possibly damaged even the appearance is not damaged and abnormality is not occurred when working.

1.3 Dialogue window

Dialogue window mainly content include operation select, operation confirm etc. tips information. For instance:

(Figure1.3-1: Operation select window)

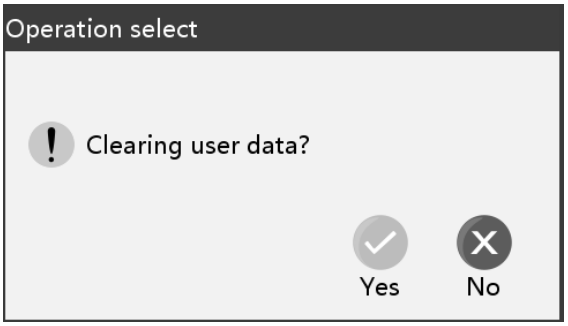

(Figure1.3-2: Operation confirm window)

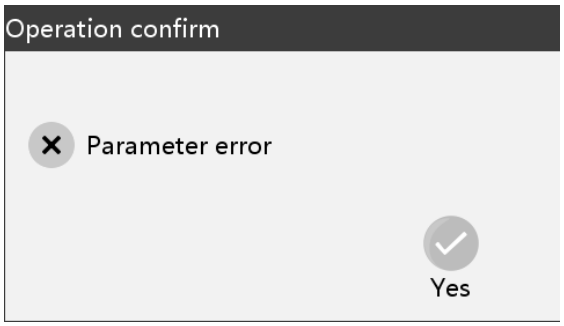

1.4 Symbols

Not all of the below symbols are existed in the equipment you have purchased.

Table:1.4-1

Marks	Description	Marks	Description
LOT	Batch code		Protective earth (ground)
SN	Serial number	IP24	Drip Proof(Degree of protection against ingress of fluids)
	Caution		Alternating current
	Defibrillation-proof type CF applied Part		Handle with harmless method
	Date of Manufacture		Manufacturer
20	environment-friendly use period (20 a)		Non-ionizing electromagnetic radiation
EC REP	Authorized Representative in the European Community		Refer to instruction manual /booklet
	Unlock		Lock
	Input / output		Input
	This side up		Fragile items
	Keep dry		Stacking level limit
CE 0197	CE-mark/Notified Body		

Chapter2 Overview

2.1 Application Scope

2.1.1Expected Purpose

The syringe pump is used together with syringe to control the dose of liquid infused into patient's body, for example intravenous infusion.

2.1.2Expected Working Environment

The syringe pump is expected to be used in institutes or units with healthcare capability. Including but not limited to: outpatient department, emergency department, General wards, ICU (intensive care unit), NICU (neonate intensive care unit), operating room, observation room, clinics and nursing home.

2.1.3Suitable object

Adult, child or neonate.

2.2 Contraindications

No

2.3 Working Principle

It is controlled to move into a linear motion from a microcontroller based system which drives a step motor, allowing a wide range of pumping rates configured to the inside diameter of the loaded syringe. The syringe plunger is driven from a lead screw and drive-nut mechanism, infusing the drugs into the patient.

2.4 Structure and Performance

2.4.1Structure and Performance

The syringe pump mainly composes of the main unit and built-in battery. Double CPU has been adopted to our pump to ensure infusion safety .This equipment provides several infusion modes, such as ml/h mode, body weight mode, TIVA mode, loading dose mode, sequence mode, ramp up/down mode and relay mode. Additionally, it also has functions such as history records, drug library, Anti-bolus, alarm and so on.

2.4.2Accessories

Power wire、Pole clamp、Handle

2.4.3Description on Model

This equipment has two models: EN-S7, EN-S7 Smart, the main function differences are shown in table below.

Function /Model		**EN-S7**	**EN-S7Smart**
infusion mode	ml/h mode	√	√
	Body weight mode	√	√
	TIVA mode	-	√
	Loading- dose mode	-	√

	Sequence mode	-	√
	Ramp up/down mode	-	√
	Drug library mode	-	√
	Relay mode	-	√
Drug Library	Drug name display	√	√
	Drug dose upper and lower limit	-	√
	Drug names	30	2000
IrDA		-	Optional
IrDA and workstation communication		-	Optional
WIFI module		Optional	Optional
Occlusion alarm level		4 levels	12 levels
History Record		≥5000	≥5000
Brand Library		≥200	≥200

⚠ This User Manual describes the most configuration and most complete functions, due to model difference or optional components, not all functions are equipped in the product you purchased.

2.5 Product Specification

Safety Classification	
Electric protection Type	Class I
Electric protection Level	Defibrillation proof type CF applied Part
Protection against fluid ingress	IP24
Working mode	Continuous operation
Classification	Portable equipment, non-portable syringe pump
Specification Parameters	
Compatible Syringes	2/3ml、5ml, 10ml, 20ml, 30ml , 50/60ml
System Accuracy	≥1ml/h, ±2% <1ml/h，accuracy ±5% or ±0.005ml/h choosing the higher value
Infusion Rate	Syringe size 2/3ml: (0.01-50) ml/h Syringe size 5ml: (0.01-100) ml/h Syringe size 10ml: (0.01-300) ml/h Syringe size 20ml: (0.01-600) ml/h Syringe size 30ml: (0.01-900) ml/h Syringe size 50/60ml: (0.01-2000)ml/h
Bolus Rate	Syringe size 2/3ml: (0.1-50) ml/h Syringe size 5ml: (0.1-100) ml/h Syringe size 10ml: (0.1-300) ml/h

	Syringe size 20ml: (0.1-600) ml/h Syringe size 30ml: (0.1-900) ml/h Syringe size 50/60ml: (0.1-2000)ml/h
Purge rate	Syringe size 2/3ml: 50 ml/h Syringe size 5ml: 100 ml/h Syringe size 10ml: 300 ml/h Syringe size 20ml: 600ml/h Syringe size 30ml: 900ml/h Syringe size 50/60ml: 2000ml/h
KVO Rate	0.01-5.00ml/h
KVO Accuracy	≤±5%
Micro mode setting range	Syringe size 2/3ml: (0.1-50) ml/h Syringe size 5ml: (0.1-100) ml/h Syringe size 10ml: (0.1-200) ml/h Syringe size 20ml: (0.1-200) ml/h Syringe size 30ml: (0.1-200) ml/h Syringe size 50/60ml: (0.1-200)ml/h
Minimum flow rate increment	0.01ml/h
Pill dose after inversion	≤0.5ml
Single failure pill dose	≤3.5ml
Bolus Volume	Syringe size 2/3ml: Minimum 0.1ml, max 2ml Syringe size 5ml: Minimum 0.1ml, max 5ml Syringe size 10ml: Minimum 0.1ml, max 10ml Syringe size 20ml: Minimum 0.1ml, max 20ml Syringe size 30ml: Minimum 0.1ml, max 30ml Syringe size 50/60ml: Minimum 0.1ml, max 50ml
VTBI	0-9999ml, minimum step is 0.01ml
Total Volume Infused	0.01-9999.99ml, minimum step is 0.01ml
Time Range	1min-99hrs59min
Fuse Type	T2AL 250V
Dimensions	394(W)*90(D)*123(H) mm
Weight	Approx. 2kg
Power Supply	
AC power supply	100-240V 50/60Hz
Input power	50VA
DC power supply	DC 15V
Battery	Model: DC 203

Specifications	Specification: 11.1V 2600mAh Charging time: 5h under OFF status Working time: ≥12h (after completely charging the new battery, when the environment temperature is 25℃ and flow rate is 5ml/h, the constantly working time)
Alarm	
Alarm signal sound pressure level	When the sound is set at lowest level, alarm signal sound pressure level ≥50dB(A) When the sound is set at highest level, alarm signal sound pressure level ≤80dB(A)
Alarm information	VTBI near end, Syringe near empty, VTBI infused, Syringe empty,Pressure high, Occlusion pre alarm, Battery nearly empty, Battery empty, No battery inserted, No power supply, Check syringe installation, Reminder alarm, Standby time expired, KVO finished, Drop in pressure, Drug dose limits exceeded, system error.
Environment	
Non AP/APG type equipment	Do not use it in the environment with inflammable anesthetic gas mixed with air, and inflammable anesthetic gas mixed with oxygen or nitrous oxide
Operating	(1) temperature: 5-40℃ (2) humidity: 15-95%, non-condensable (3) atmospheric pressure: 57-106kPa
Transport & Storage	(1) temperature: -20-60℃ (2) humidity: 10-95%, non-condensable (3) atmospheric pressure: 50-106kPa
Safety Standard	
Main Safety Standards	IEC 60601-1:2005+A1:2012 Medical electrical equipment-Part 1: General requirements for basic safety and essential performance IEC 60601-1-2 :2014 Medical electrical equipment - Part 1-2: General requirements for basic safety and essential performance - Collateral standard: Electromagnetic disturbances-Requirements And Tests IEC 60601-1-6 :2010 （BS EN 60601-1-6:2010+A1:2015） Medical electrical equipment - Part 1-6: General requirements for basic safety and essential performance - Collateral standard: Usability IEC 60601-1-8：2006+A1:2012 Medical electrical equipment －Part 1-8: General requirements for basic safety and essential performance －Collateral Standard: General requirements, tests and guidance for alarm systems in medical electrical equipment and medical electrical systems IEC 60601-2-24: 2012 Medical electrical equipment –Part 2-24: Particular requirements for the basic safety and essential performance of infusion pumps and controllers

Chapter3 Appearance

3.1 Left Front View

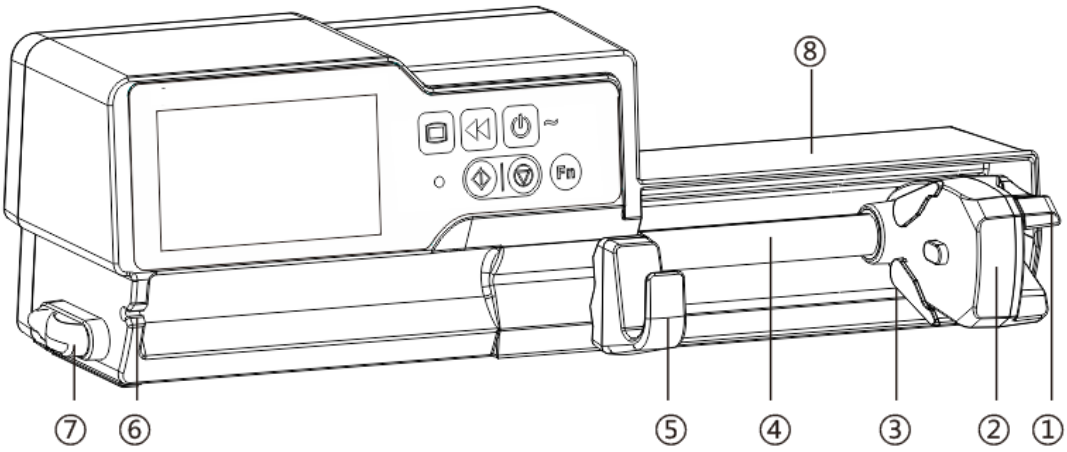

① Handle

Control syringe pump push-pull sliding box and clip.

② Slider box

③ Syringe clip

Clamp the syringe plunger.

④ Lead-screw

⑤ Syringe fixture lever

Pull forward then turn right, install the syringe into the slot.

⑥ Extension tube hook

⑦ Tube line Clamp

Keep the IV tube in line and neat

⑧ Syringe protect cover（**Optional**）

Protect syringe from large dose infusion caused by fallen.

3.2 Right Front View

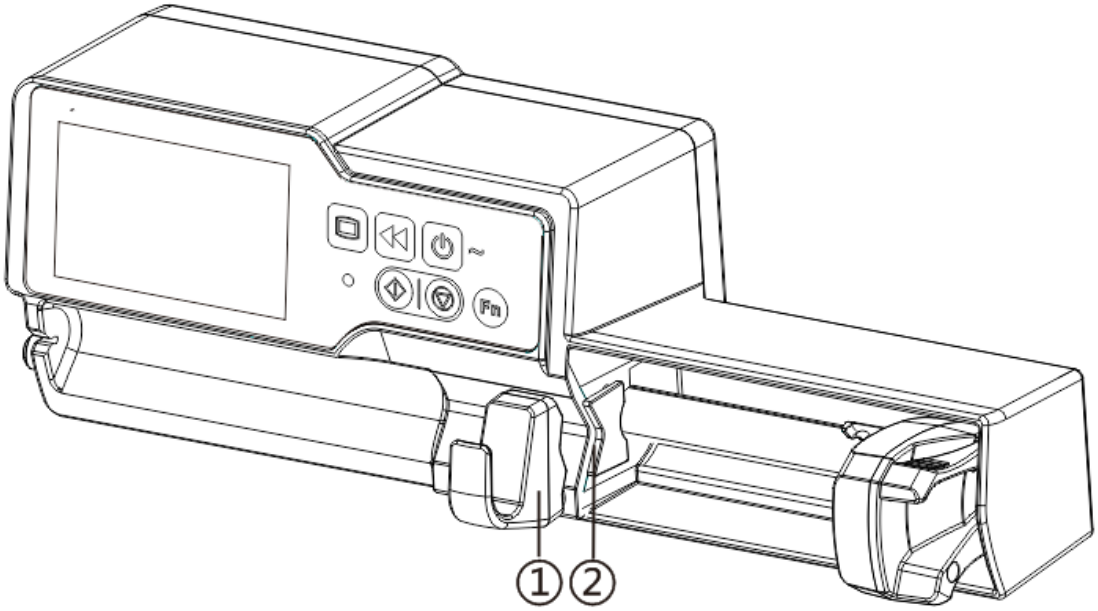

① Syringe fixture lever

② Flange plate

Pull the fixture lever, put the syringe flange into the slot.

3.3 Operation Panel

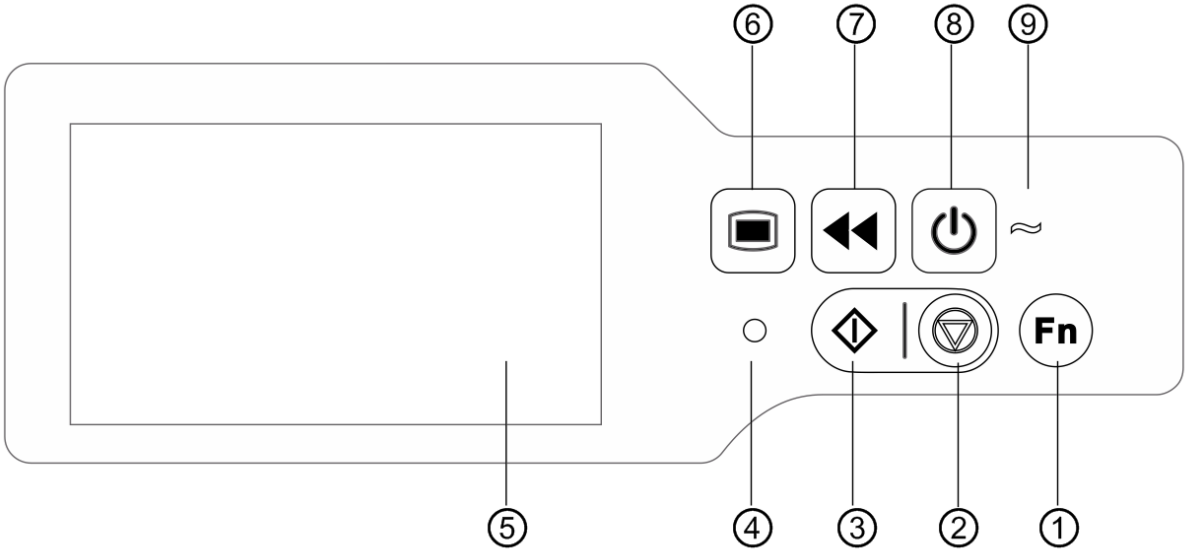

① 【Fn】For future option

② 【Stop】

Stop infusion and operation.

③ 【Start】

After setting all parameters, press start to begin infusion.

④ Alarm indicator

While pump alarms, indicator light glitters with different frequency and color, more information please **refer to 9.1**

⑤ 4.3 inches TFT(LCD) touch screen

⑥ 【Menu】

Enter system home page.

⑦ 【Bolus/Purge】

⑧ 【Power】

Pump power switch, press and hold , pump power off. Stand-by selection button.

⑨ AC indicator

When connecting with AC power supply, AC indicator lights on.

3.4 Display Screen

The display screen interface layout composes of title bar and typical interface.

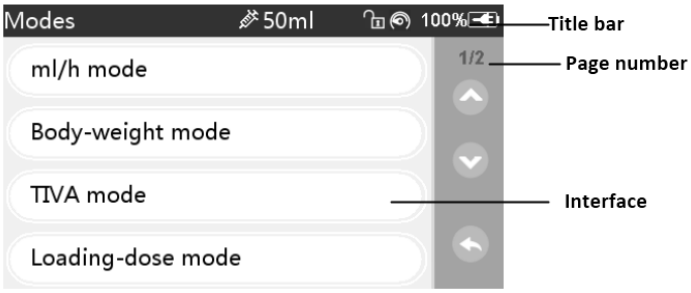

3.4.1 Title Bar

Title bar displays real-time state information and is not touchable, the left upper corner displays the name of current editing parameter.

Table3.4.1-1: Title Bar Icon

Icon	Paraphrase	Description
	Syringe apparatus indication icon	/
	Workstation access icon	It displays only the equipment has accessed the EN-D7 Smart infusion workstation correctly, please refer to “infusion workstation User Manual” for details
	Lock screen indication icon	Unlock state icon is
	WIFI indication icon	Indicate WIFI connection state.
	Pressure indication icon	Display the pressure change of the current infusion line at real time. When the infusion line pressure changes, the pointer turns clockwise, when the line pressure reaches or exceeds the set occlusion level default pressure value, it alarms for occlusion.
	Battery charging indication icon	Display the current battery charging state.
	Battery status indication icon	The percentage numerical or remaining time value at the left side of the icon displays the remained battery. Since the remained battery may change, it may possibly show the following states:

3.4.2 Typical Interface

During pre-infusion and infusion, the typical interface will display the following: main interface, working interface, alarm interface, prompt interface, control panel, parameters setting, input method, standby interface etc.

3.4.2.1 Typical Interface Icon Paraphrase

Table:3.4.2.1-1

Icon	Paraphrase	Description
	Start	Click this icon, start infusion
	Stop	Click this icon, stop infusion
	Bolus/Purge	1. During infusion, it is『Bolus』function, click it to start fast infusion 2. Before infusion starting, it is『Purge』function, click it to exhaust air from the syringe
	Menu	Click this icon, return to the main interface
X/Y	Page indication	Arabic numerals mean, X is the current page, Y is the total page
	Up	Click this icon, return to the back page
	Down	Click this icon to enter into the next page
	Return	Click this icon, return to the back menu
	Left	In the infusion parameters setting interface, click this icon to turn to the left page
	Right	In the infusion parameters setting interface, click this icon to turn to the right page
	Single selection box-1	Mean that this parameter is selected
	ON	Mean this function is ON
	OFF	Mean this function is OFF.

3.4.2.2 Input Method Interface

The input method interface composes of the title bar, input box, editing box.

1) Title bar: display the name of current editing parameter.
2) Input box: real-time display the input content.
3) Editing box: It composes of the main button area and function button area.

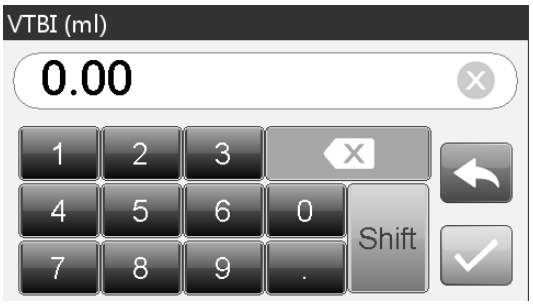

The main button area composes of the numerical value, letters and icons, click it continuously to change the sequence.

The function button area composes of clear button, backspace button,『 』,『 』and『Shift』.

Icon	Paraphrase	Description
	Clear button	Click it to clear input
	Backspace button	Click it to backspace delete
Shift	Shift button	Click it to switch the capital and lowercase English letters
	Cancel button	Click it to cancel editing and exit
	Enter button	Click it to save the input and exit

3.5 Rear View

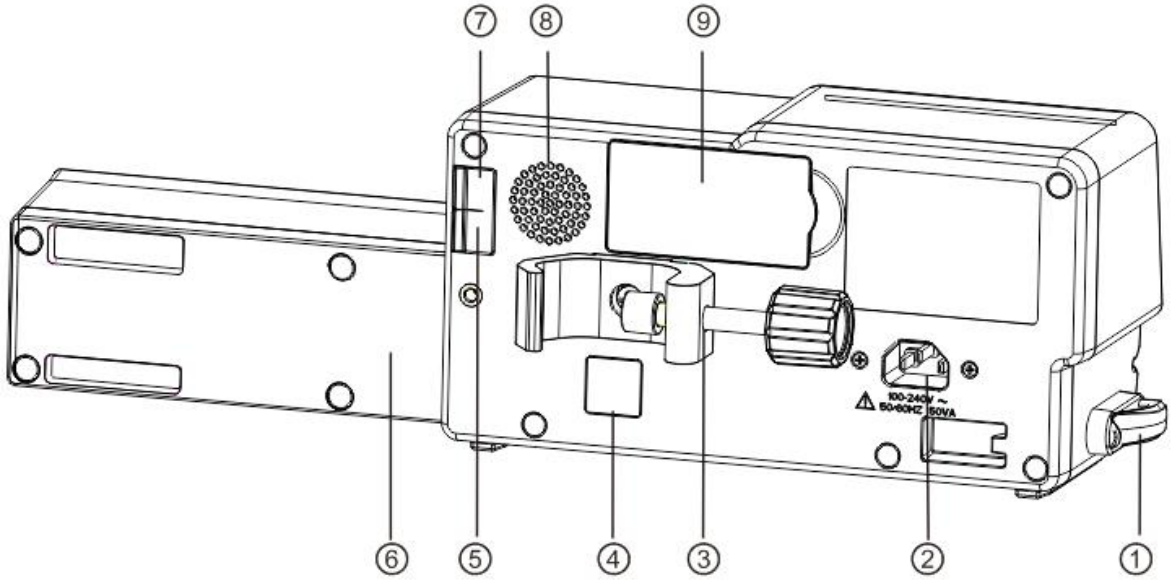

① IV tube clamp

Keep the syringe extension tube in line and neat

② A/C Adapter Port

External 100-240V 50/60Hz AC power supply

③ Pole Clamp

Using for mounting the equipment on the infusion stand

④ IrDA

Using for communicating with EN-D7 Smart workstation(Optional)

⑤ USB Port

Port for software upgrade

⑥ Syringe Protection Cover (Optional)

Protect syringe from large dose infusion caused by fallen

⑦ USB Port for future using

⑧ Loudspeaker

⑨ Battery Compartment

Built-in lithium-ion battery

Chapter4 Installation

4.1 Unpacking and Checking

1) Please check the appearance before unpacking, if broken, please contact the transportation company or our after-sale service department quickly.
2) Please carefully open the package to avoid damaging the equipment and relevant accessories.
3) After unpacking, please check the objects according to the packing list, if there're insufficient or damaged accessories, please contact our company as soon as possible.
4) Please keep relevant accessories, User Manual.
5) Please keep the packing case and packing materials for future transportation or storage.

⚠ Warning: Please put the packing materials out of reach of children. Please obey local laws and regulations or the hospital waste treatment system to handle the packing materials.

4.2 Installation

⚠ Warning:

- This equipment shall be installed by the designated technicians of our company.
- All devices that connect with this equipment must pass the designated IEC standards (for example: IEC 60950 information technology equipment safety and IEC 60601-1 medical electric device safety) certification, and all devices must be connected according to the valid version of IEC 60601-1system. The technician who takes charge of connecting to additional devices with the equipment interface is responsible for meeting the IEC 60601-1 standard. Please contact our company if you have any enquiry.
- When connecting this equipment with other electric devices to form the combination with special function, if the combination can't be confirmed dangerous or not, please contact our company or the electric expert of hospital to ensure that the necessary safety of all devices in the combination won't be destroyed.
- This equipment must be used and stored in the environment regulated by our company.

4.2.1 Install the syringe Pump

(1) Rotate the pole clamp screw(knob) and unscrew to leave the space.

(2) Lock the Pole Clamp on the infusion stand, adjust the position of the syringe pump, tighten the pole clamp to fix the syringe pump on the infusion stand (shown in drawing below). Hold the syringe pump when tightening the fixing clamp; loose it after tightening to avoid falling.

(3) The pole clamp supports the vertical pole at default state. To adjust the pole clamp direction, please remove the bolt from the pole clamp screwdriver, take out the pole clamp and adjust the direction, then tighten the bolt.

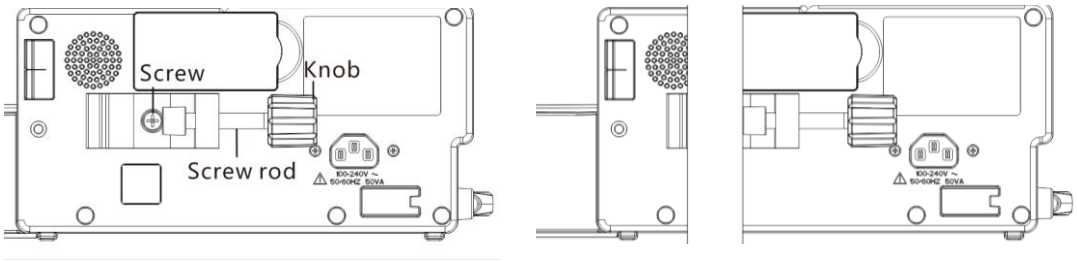

Chapter5 Use Preparation and Cautions

5.1 Use Preparation

The new equipment, or reusing after storing for a period, or reusing after repair, please check it to ensure before use:

- The equipment appearance is clean and under good condition without crack and leakage.
- The moving components are smooth and effective; the pump piston can be opened and closed smoothly, the button is effective.
- The touch screen can be operated smoothly and effectively.
- The power wire is installed tightly and won't be easily damaged when pulling.
- Set and check the system time to ensure that the history records will be correctly recorded.
- In case only built-in battery is adopted for supplying power, please charge it to full before using, and ensure that the battery keeps at the effective working conditions.
- Carefully read the Warnings, Cautions and Operation Steps listed in this User Manual.

5.2 Operation Cautions

⚠ Cautions:

- Avoid direct sunlight, high temperature or high humidity.
- The equipment shall be put at the position less than 0.65m to the heart of the patient.
- The parameters can only be set or changed by the trained and professional personnel.
- Avoid the equipment working with fault so as to avoid medical negligence, which may hurt the health and even life of the patient.
- It may possibly drop the infusion accuracy or abnormal work of the equipment if the working environment temperature exceeds the designated range.
- The viscosity and specific gravity of infusion fluid will influence the infusion accuracy.

Chapter6 Basic Operation

6.1 Operation Flow

¤ Mount the syringe pump on the IV stand

¤ Power on

¤Install syringe

¤ Select syringe brand or add new brand

¤ Select infusion mode

¤ Set infusion Parameters

¤ Remove air bubble in the line

¤ Connect infusion line with patient

¤ Start infusion

¤ Infusion finish

¤ Remove syringe

¤ Power off or Standby

6.2 Infusion Operation

6.2.1Equipment Installation

Mounting the device on the infusion stand according to **Chapter 4.2**, connect with AC power supply，check the AC indicator lights.

6.2.2Starting and Self-test

1) Press ⏻ ，power on the equipment
2) After power on, the system will automatically check the motor, sensor, battery, memorizer, CPU communication, alarm indicator.
3) After passing self-test, pump enters into ml/h mode interface.

⚠Warning: ● If self-test failed, pump cannot operate properly or damaged, it cannot used for patient infusion, please contact the company actively.

6.2.3Install Syringe

(1) Hold the clutch and pull the slider to the right side.

(2) Pull the syringe fixture lever, turn to the right.

(3) Insert the syringe flange into the slot, clip the plunger firmly.

(4) Hang the extension tube of the syringe on the extension hook and put the syringe inside the tube clamp.

(5) If installed with success, syringe pump will recognize syringe brand and size automatically, if failed, please repeat the above mentioned steps.

⚠Warning:

- The flange of the syringe should be firmly inserted into the slot, and not jutting on the outside of the flange plate.
- Before using the syringe pump, pls. ensure the syringe brand specifications of the syringe used must be confirmed. The brand of syringe pump should be calibrated on the equipment. If there are no settings for the syringe used, the rate and the alarms may not be accurate.

6.2.4Set Infusion Parameters

Enter the『modes』interface, select infusion mode, then set infusion parameters.

6.2.5Remove Air bubble

Under the parameters setting interface, Press 【Bolus】button and hold on, Or touch the screen purge icon ,eliminate the air bubble in the line .

The purge total volume is not calculated in the Total Volume Infused.

⚠Cautions:

- Before purge air, pls. confirm the infusion line is **not connected** with the patient.
- Purge rate is the max rate of the syringe size, when purge volume ≥5ml（Syringe size 2/3ml is 2ml）, purge will automatically stop.

6.2.6Start Infusion

Connect extension linewith patient, confirm infusion parameters, Press【Start】button or touch screen 『Start』, icon ,start infusion.

6.2.7Change infusing parameters during infusion

Under running interface, click the currently rate number enter parameters setting interface, reset target infusion rate.

⚠Note: ● Only the ***ml/h mode*** and ***Body weight mode*** support rate modification function

Under running interface, click Menu to enter parameter setting interface, change VTBI, Time, and Reset total volume during infusion.

⚠Note: ●Only the ***ml/h mode*** support VTBI, Time, and Reset total volume during infusion.

6.2.8Bolus Application

In operation, Bolus functions have two operation modes: Manual bolus and Automatic bolus.

(1) **Manual bolus**: press and hold the 【Bolus】button, pump will work at bolus rate, release the button, pump will back to the previous setting infusion rate.

(2) **Automatic bolus**: Under the running interface, click『Bolus』, set two parameters among bolus infusion volume, rate and time, click『Start』. After bolus infusion finished, the equipment back to the previous setting rate.

A beep sound can be heard in every 1ml infusion under bolus status.

⚠Note: The "VTBI near end " alarms are not triggered during Bolus.

6.2.9Infusion Completion

When infusion near completion, pump will alarm. If ignore it, the system will keep alarming until finishing infusion.

After VTBI completed, it activates VTBI infused alarm, if KVO function is ON, the equipment automatically starts KVO function, click 『OK』 in the alarm interface to stop KVO and eliminate alarm.

The default working time of the KVO system is 30min, after reaching the time, it will activate KVO completion alarm and stop infusion.

Please refer to **Chapter 8.1.2** for setting KVO rate.

6.2.10 Stop Infusion

During infusion or after infusion, click, infusion stop. The interface display Total Volume Infused and adjustable parameters.

6.2.11 Remove the syringe

Disconnect the extension linewith the patient, then remove the syringe sets.

Replace syringe, please follow the steps of **Chapter 6.2.3**.

6.2.12 Power OFF or Standby

Method 1: hold the 【Power】Button till the screen is OFF, the equipment is OFF.

Method 2: press the 【Power】Button to enter into OFF interface.

(1) Turn off the equipment: click 『Power off』icon, the equipment is turned OFF.

(2) Standby: click『Standby』icon to enter into standby time setting interface, set the standby time.

Standby time range: 1min - 99hrs59min

Under standby state, the screen brightness will be lowest, after standby, the screen brightness will be recovered.

(3) Cancel: click『Cancel』, return to the interface before OFF setting.

(4) If no operation, the device will enter standby interface automatically.

⚠Note: ● <u>The equipment has standby function only under the non-working state.</u>

Chapter7 Set Infusion Parameters

7.1 Introduction to Infusion Parameters Setting

(1) The drug information can be displayed in the infusion running interface only when the drug library is under active state.

Click『Settings』 icon in the main interface to enter sub-menu, find 『Drug Library』menu item, click to enter and select drug(『None』indicate the drug library is off). Please refer to this User Manual Chapter 8.1.1 for details.

(2) For both the rate set in infusion parameter and the rate calculated by the system, the range is the system default flow rate of the current working syringe specification.

(3) If didn't set VTBI (Volume to be infused), the syringe pump will work to complete the fluid/drug in the syringe.

7.2 Infusion Parameters Setting Range

Infusion Mode	Infusion Parameter	Parameter Range
ml /h mode	VTBI	0.01-9999ml
	Rate	(0.01-50)ml/h for 2/3ml syringes (0.01-100)ml/h for 5ml syringes (0.01-300)ml/h for 10ml syringes (0.01-600)ml/h for 20ml syringes (0.01-900)ml/h for 30ml syringes (0.01-2000)ml/h for 50/60ml syringes
	Time	1min-99hrs59min
Body weight mode	Weight(Body weight)	0.1-300kg
	Acti agentia(Drug mass)	0.01-99999
	Conc.unit(Concentration unit)	ng/ml, ug/ml, mg/ml, g/ml, U/ml, kU/ml, IU/ml, IE/ml, mmol/ml, mol/ml, kcal/ml
	Volume(Fluid amount)	0.01-9999ml
	Dose rate	0.01-9999
	Dose rate unit	ng/min, ug/min, mg/min, g/min, U/min, KU/min, IU/min, IE/min, mmol/min, mol/min, kcal/min, ug/h, mg/h, g/h, U/h, KU/h, IU/h, IE/h, mmol/h, mol/h, kcal/h, ug/kg/min, mg/kg/min, g/kg/min, U/kg/min, KU/kg/min, IU/kg/min, IE/kg/min, mmol/kg/min, mol/kg/min, kcal/kg/min, ug/kg/h, mg/kg/h, g/kg/h, U/kg/h, KU/kg/h, IU/kg/h, IE/kg/h, mmol/kg/h, mol/kg/h, kcal/kg/h

TIVA mode	Acti agentia(Drug mass), Concentration unit Volume(Fluid amount) Weight, Loading rate, Loading rate Unit. Loading time, Maintaining dose, Maintain dose unit, Dose Unit,	The same as Body Weight mode
Loading dose mode	VTBI	The same as ml/h mode
	Maintain rate	
	Loading rate	
	Loading time	
Ramp up/down mode	VTBI	The same as ml/h mode
	Rate	
	Rise time	
	Fall time	
Sequence mode	Rate	The same as ml/h mode
	Time	
Drug library mode	Weight	The same as body weight mode
	Concentration	
	Dose rate	
	VTBI	

7.3 Infusion Mode Setting

After starting the equipment and self-test, the equipment automatically enters into the ml/h mode parameters setting interface, to select other mode, click『Menu』icon to enter into the main interface, click『Modes』icon to enter into the mode selection menu interface, and select preset infusion mode.

7.3.1ml/h Mode

Under this mode, it allows to set three parameters: Rate, VTBI (Volume to be infused) and Time, set any two of the three parameters, and the system will automatically calculate the third parameter, if the VTBI is 0, then the equipment works at the set rate till stop with alarm.

7.3.2 Body Weight Mode

Under this mode, set the Weight(body weight), Conc.unit(concentration unit), Acti agentia(drug mass),Volume(fluid volume), Dose rate, Dose unit, VTBI.

The system will automatically calculate the flow rate from the specified dose rate (ug/kg/min, mg/kg/min, ug/kg/h, mg/kg/h,…etc) according to related formula {dose rate × weight}/{Acti agentia(drug mass)/Volume(fluid volume)}, and automatically calculate the time according to (VTBI) /(flow rate).

Exmaple: the dose rate unit(ug/kg/min)

$$flow \text{ rate (ml/h)} = \frac{Dose\ rate(ug/kg/\min) \times Weight(kg) \times Volume(ml)}{\text{Acti agentia(mg)} \times 1000} \times 60$$

Exmaple: the dose rate unit(mg/kg/h)

$$flow \text{ rate (ml/h)} = \frac{Dose\ rate(mg/kg/h) \times Weight(kg) \times Volume(ml)}{\text{Acti agentia(mg)}}$$

7.3.3TIVA Mode

Under this mode, firstly, set the basic parameters of the Conc.unit(concentration unit),Acti agentia(drug mass), Volume(fluid volume), Weight, and then set the Loading stage: set Loading dose rate, Loading time. Set maintenance stage: set Maintaining dose and units, the system will automatically calculate the fluid rate, start running, first run the Loading dose rate after the end of the Loading time change to works at the Maintaining dose which automatically calculate by system until manually stop or stop with alarm.

7.3.4Loading -dose Mode

The Loading- dose mode means to infusion with the Loading flow rate according to the Loading time, after reaching the Loading time, it works at the Maintain rate till complete the VTBI(Volume to be infused).

Loading dose VTBI =Loading rate ×Loading time

Maintain time = (VTBI -Loading VTBI) /Maintain rate

Under this mode, set the VTBI, Maintain rate, Loading rate, Loading time, system automatically calculate Loading dose VTBI and Maintain time.

⚠Note: ● VTBI must be greater than the Loading dose VTBI otherwise, when setting exceeds the limit, the excess part can't be set.

7.3.5Ramp up/down Mode

Ramp up/down mode means to automatically increase the flow rate till reaching stable flow rate within the set rise time of the equipment through setting the rise time and fall time, after holding for a period, it automatically drops the flow rate within the set fall time. The rising or dropping stage is implemented in 9 stages.

Under this mode, set VTBI, rate in the stable stage, rise time and fall time, the system will automatically calculate the rising and dropping rate.

7.3.6Sequence Mode

Sequence mode means to infuseaccording to the set sequence after setting the rate and time of

different sequence groups. At most 5 sequence can be set in this mode.

7.3.7Relay Mode

This function is available with the infrared communication function after combining this equipment with EN-D7 Smart infusion workstation made by our company. Please refer to our company “infusion workstation User Manual” for details.

7.3.8Drug Library Mode

『None』indicate the drug library mode is turned off. Click drug names and follow the instructions to input infusion parameters.
DERS is applicable to this mode, drug dose rate will be limited. “Drug dose limits exceeded” alarm will be triggered if accumulated dose in certain time exceed preset dose limits.

⚠Note: ●This device support self defined or customized drug information edit function. If required, please contact with authorized party.

Chapter8 System Setting

8.1 Settings

Click『Settings』icon in the main interface to enter into parameters setting interface.

8.1.1Drug Library

Click『Settings』 icon in the main interface to enter submenu, find 『Drug Library』 menu item, click to enter then set the ON/OFF state of drug library and select drug.

8.1.1.1 Introduction to Drug library

(1) EN-S7 Smart supports over 2000 medicines, which can be imported with external tool, and has the functions such as upper and lower limit, concentration and so on.

Select medicine and then import the medicine parameters, the user may change the parameters including the concentration and dosage rate, but the parameters won't be saved.

(2) EN-S7 supports 30 drugs, and allows to edit the medicine name, save the names after turning off the machine, but the upper and lower limit function is unavailable.

8.1.1.2 Setting Drug library

Click the medicine name with preset value. The selected medicine will be displayed in the infusion mode parameter.

Select this function ON/OFF.

8.1.2KVO Rate

Click『KVO rate』, input the numerical value, after confirming, click.

Please refer to Chapter 2.5 for the adjustable KVO range.

⚠Note: ● KVO will be closed if KVO rate is 0ml/h.

8.1.3Bolus Rate

Click『Bolus rate』, input the numerical value, after confirming, click.

Please refer to Chapter 2.5 for the adjustable Bolus rate range.

8.1.4Occlusion Pressure

Click『Occlusion pressure』to enter into occlusion level setting interface, move the long box to the preset level, after confirming, click 『OK』.

The higher the level, the higher the occlusion level, it is suggested to select suitable occlusion pressure according to actual requirement.

With DPS switch on, line pressure is graphically and dynamically visible during infusing status.

⚠Warning:

- When adopting fluid/drug of high viscosity and the occlusion pressure is set at low level, it is

possible that the system will report occlusion alarm even when the line is not obstructed, under this condition, please carefully observe the pressure indication icon in the display screen and infusion line, and rise the occlusion pressure if needed.

- When the blocking pressure is set to high grade, the larger pressure inside the pipeline is likely to be washed away from the extension tube connected to the syringe. Please confirm that the extension tube is securely attached to the syringe.
- When the occlusion pressure is set at high level, it may possibly cause the patient uncomfortable, after rising the occlusion pressure, please carefully observe the condition of the patient, and immediately take measure if there's any abnormality.
- Under the equipment fault state, the max pressure generated by the infusion line is 160kPa. Under single fault state, the max infusion volume is 3.5ml.
- If not used for intravenous infusion, for example Intra-arterial infusion, TPN (Total Parenteral Nutrition) or EN (Enteral Nutrition) treatment, occlusion level should be adjusted to higher levels.

(Table : Relation of Occlusion level and Pressure)

Applicable Model: EN-S7 Occlusion Pressure Level: 4 levels				
Level	Pressure Intensity (mmHg)	Pressure Intensity (Kpa)	Pressure Intensity (bar)	Pressure Intensity (psi)
1	225	30	0.3	4.35
2	450	60	0.6	8.7
3	675	90	0.9	13.05
4	900	120	1.2	17.4
Applicable Model: EN-S7 Smart Occlusion Pressure Level: 12 levels				
Level	Pressure Intensity (mmHg)	Pressure Intensity (Kpa)	Pressure Intensity (bar)	Pressure Intensity (psi)
1	150	20	0.2	2.90
2	225	30	0.3	4.35
3	300	40	0.4	5.8
4	375	50	0.5	7.25
5	450	60	0.6	8.7
6	525	70	0.7	10.15
7	600	80	0.8	11.6
8	675	90	0.9	13.05
9	750	100	1	14.5
10	825	110	1.1	15.95
11	900	120	1.2	17.4
12	975	130	1.3	18.85

When the line occlusion activates occlusion alarm, the system will automatically trigger anti-bolus function to drop the line pressure and avoid additional impact bolus to the patient after contacting the occlusion. Liquid leakage will be less than 0.2ml, line pressure will be less than 300mmHg.

8.1.5DPS(Dynamic Pressure System)

With DPS switch on, line pressure is graphically and dynamically visible during infusing status.

“Drop in Pressure” alarm will be triggered while pressure in line is dropped in sudden. This can be caused by disconnect of extension line or patient side

8.1.6Finish Pre-alarm

Time for pre-alarm refers to the time of activating nearing completion alarm when the fluid/drug infused volume is nearly reaching the preset value.

Click 『Finish pre-alarm』to enter into the time for pre-alarm setting interface, select ON or OFF, click the preset time option, then the corresponding icon of this option changes into .

The adjustable range of time for pre-alarm is: 2min, 5min, 10min, 15min, 20min, 30min.

8.1.7Reminder Alarm

Click『Reminder alarm』to enter into the time for reminder alarm setting interface, select ON or OFF, click the preset time option, then the corresponding icon of this option changes into . The adjustable range of time for time for reminder alarm is: 2min, 5min, 10min, 15min, 20min, 30min.

Reminder alarm means that the system will activate “Reminder alarm” if no button is operated when the syringe is loaded within the preset time for “Reminder alarm” when the equipment is under no infusion no alarm state.

8.1.8Weight Unit

Click 『Weight unit』 to enter into the body weight unit setting interface, click preset body weight unit option, then the corresponding icon of this option changes into .

⚠Note: ● The current software version only support unit kg.

8.1.9Pressure Unit

Click 『Pressure unit』to enter into pressure unit select setting interface, four units are available: mmHg, kPa, bar, psi, click the preset unit option.

⚠ Note: ● Please carefully confirm when changing the current pressure unit.

Unit Mark	Unit Conversion
kPa	1 kPa=7.5mmHg=0.145psi=0.01bar
psi	1psi=51.724mmHg=6.897kpa=0.069bar
bar	1bar=750mmHg=14.5psi=100kPa

8.1.10 Micro Mode

Click『Micro mode』 to select the micro mode to be turned on and off. Under the ON mode, the infusion rate under any infusion mode is not allowed to exceed this limit.

Micro mode speed limit setting: Click『System』→ 『Maintenance』 → enter password 2341 → 『Micro mode setting』 to enter the micro mode speed limit setting interface.

⚠Warning: Speed setting requires department head nurse authority

Syringe Size	Max Rate Range
2/3ml	0.1-50ml/h
5ml	0.1-100ml/h
10ml	0.1-200 ml/h
20ml	0.1-200 ml/h
30ml	0.1-200 ml/h
50/60ml	0.1-200 ml/h

8.1.11 Commonly used syringe brand

For the built-in syringe brand of the system, after installing the syringe, click『Commonly used syringe brand』to enter into the syringe brand selecting interface, and click the preset brand option.

The system built-in syringe brand: Double-Dove, B.Braun, BD,TERUMO.

Syringe brand	2/3ml	5ml	10ml	20ml	30ml	50/60ml
Double-Dove	√	√	√	√	√	√
B.Braun Perfusor				√		√
BD		√	√	√	√	√
TERUMO		√	√	√	√	√

⚠ ● The syringe of different brand may possible cause flow rate deviation, when use, please confirm if the displayed information in the interface is accordant with the actual working syringe brand.

8.1.12 Reset Total Volume

Click『Reset total volume』, the interface displays the operation confirming prompt box, click『Yes』to confirm reset, otherwise, please click『No』

8.2 General

In the main interface, click『General』to enter into the equipment setting interface.

8.2.1NetWork

This equipment supports wireless or wire interconnection, when it is equipped with wireless module and connects with the Internet through WIFI, the equipment screen displays icon.

Click『NetWork』in main interface to set the response.

This device support HL7 protocol. It can transfer UDP data to dedicated network system visa WiFi. Data will include device serial No., device status, alarms, VTBI, accumulated volume,

remaining time, programed rate, pressure level, real time pressure, real time rate, patient information.

⚠Note: ● This function shall be set by the professional equipment maintenance technician.

● After activating the interconnection function, the equipment can periodically transmit the equipment data to outside, and the data is only for displaying and doesn't provide any suggestion on therapy.

8.2.1.1 Connection Mode

The interconnection channel supports WLAN and serial port modes, please select according to the actual requirement.

8.2.1.2 Relay

Set the Relay mode switch and Relay sequence number.

8.2.1.3 WLAN

When WIFI function is in use, turn on the WLAN switch of the equipment, set the name and password of access point, and configure the TCP/IP parameters.

⚠Note: ● The wireless access must be set by the professional technician recognized by our company.

● The transmitted data of this equipment doesn't provide any suggestion on therapy, and this data shall not be used for calculating the therapeutic schedule.

● When the data is adopted by the third party's equipment or software, it is only for displaying, and shall not be used for alarming or calculating.

8.2.2Sound

Click『Sound』 to enter into the sound parameters setting interface, the volume has 10 levels. The lowest volume is ≥50dB, and the highest volume is ≤80 dB. Move the long box to the preset value, after confirming, click『OK』.

8.2.3Date & Time

Click『Date &Time』to enter into the date and time setting interface. It allows to set the date, time and format in this interface.

When setting date and time, directly input the numerical value in the input method interface. For example, to preset one date "2015-08-31", input "20150831"; to preset the time "13: 34", input "1334".

The time is displayed in 24h format or 12h format, the date is displayed in British type, American type or Chinese type, please set according to the requirement.

8.2.4Screen Lock

Click『Screen lock』to enter into automatic lock screen setting interface, select ON or OFF.

Automatic lock screen time can be set at 15s, 30s, 1min, 2min, 5min, 10minor 30min and so on, which means that the equipment will automatically lock the screen if it is not touched or the

button is pressed within corresponding time after starting. If the screen or keypad is locked, no operation can be conducted.

After turn on 『Screen lock』function during infusing，press【Power】key to lock or unlock the device manually.

Unlock: press any keypad, or click the screen, a reminder of unlock will be popped out, click 『OK』.

⚠Note: ● The equipment will automatically unlock if there's high Level alarm.

8.2.5Brightness

Click『Brightness』to enter into display brightness setting interface. The brightness has 10 levels.

8.2.6Night Mode

Click『Night mode』 to enter into night mode switch setting interface to set the start and end time of the night mode and the night brightness, at night, the system automatically adjusts the brightness to the User defined value.

8.2.7Nurse Call

Click『Nurse call』to select function ON and OFF.

⚠Note: ● The nurse call function must be used with special cable.

● The user shall not only depend on the nurse call function as the main alarm notice mode, and shall identify according to the equipment alarm and the patient state.

8.2.8Nurse Call Alarm Level

Click『nurse call alarm level』to select different alarm levels.

8.2.9Battery Capacity Display

Display of battery capacity under h:m or percentage status can be switched and title bar display changes accordingly.

8.3 Patient

Click『Patient』in the main interface to enter into setting interface.

8.3.1Patient Information

Click『Patient』to enter into the patient information setting interface and set bed number, MRN, name, gender, age, body weight, height.

8.3.2Prescription

Click『Patient』to enter into the patient information setting interface and enter the end of the sub menu, find menu item 『Prescription』and enter to set the medical advice ID, medical advice information, start time and state.

8.4 Records

8.4.1History entries

Click 『Records』in the main interface to enter submenu, click the “History entries” menu item into history records query interface. The equipment supports to save over 5000 history records, and can display the event name, event date and time. When it is full, the new records will cover the old records by turn.

8.4.2Last therapies

Click 『Records』in the main interface to enter submenu, click the 『Last therapies』 menu item into medical records query interface.

(1) This interface displays the latest 20 medical records, user may directly select it as the current infusion plan, after confirming the parameters, it starts infusion.

(2) The system can save 20 medical records at most, when it is full, the new records will cover the old records by turn.

8.4.3Export history records

Log on the PC tool to connect this equipment with PC;

After the equipment has achieved communication with PC, the PC can automatically read the data in this equipment;

Create the history record folder in the PC to export the data to the folder.

⚠Note: ● Please do not export data when the equipment is working.

8.4.3.1 The tool ‘Enmind Tool’ running environment

32bit or 64bit WIN7 and below WIN7, and now WIN10 system is not supported.

8.4.3.2 Enmind Tool installation instructions.

Click ‘setup’, and run the file, then click ‘Next’ and ‘Install’ in order.

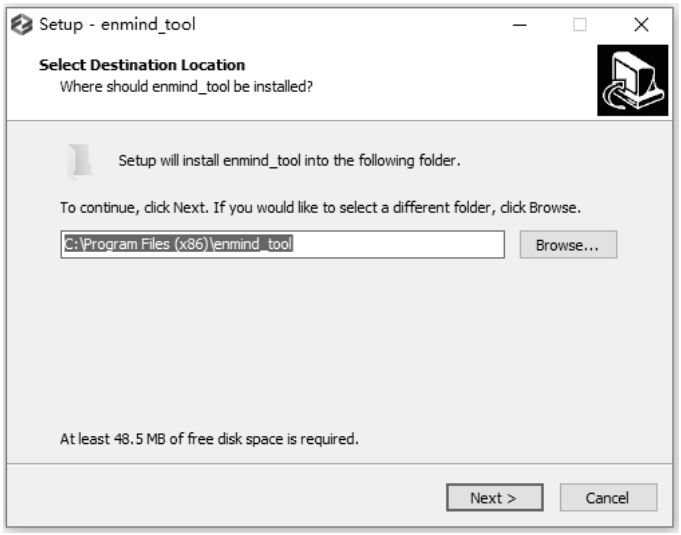

Finally, click 'Finish'. Here, 'enmind tool' is installed successfully.

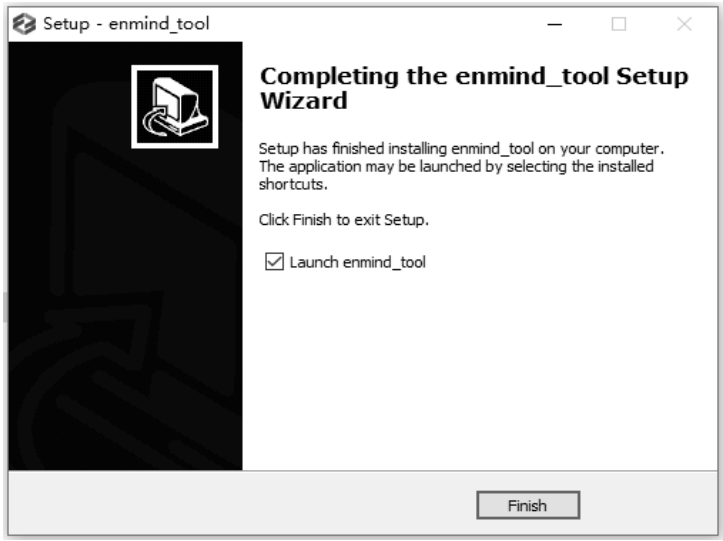

8.4.3.3 Export historical data

（1）Power on syringe pump, then click 【Menu】, then enter this directory, 『Menu』->『Record』->『Export history records』.

（2）Now syringe pump will display "Connect data line"，user need connect syringe pump to PC with TYPE-C data line. And syringe pump will display "Data cable is connected"after connection success.

（3）Open PC tool "Enmind Tool"，COM position will display green COM port number, and SN position will display SN number. The result indicates that the serial port is opened successfully, and the historical data can be exported.

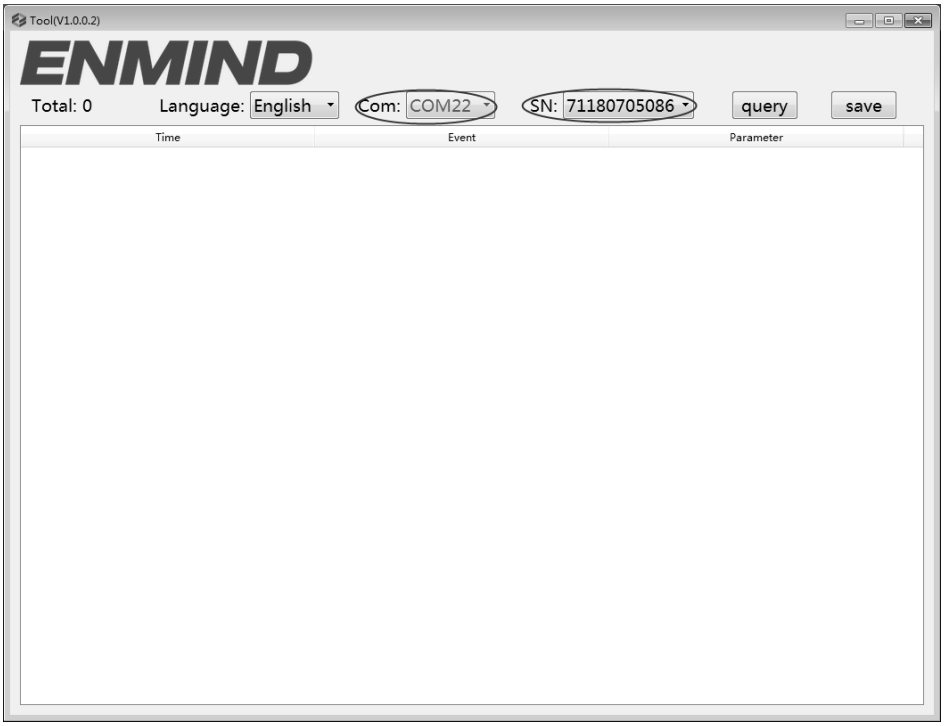

（4）Export data, click software UI 『query』button，read the pump's historical data, the syringe pump UI will display "Send Completed".

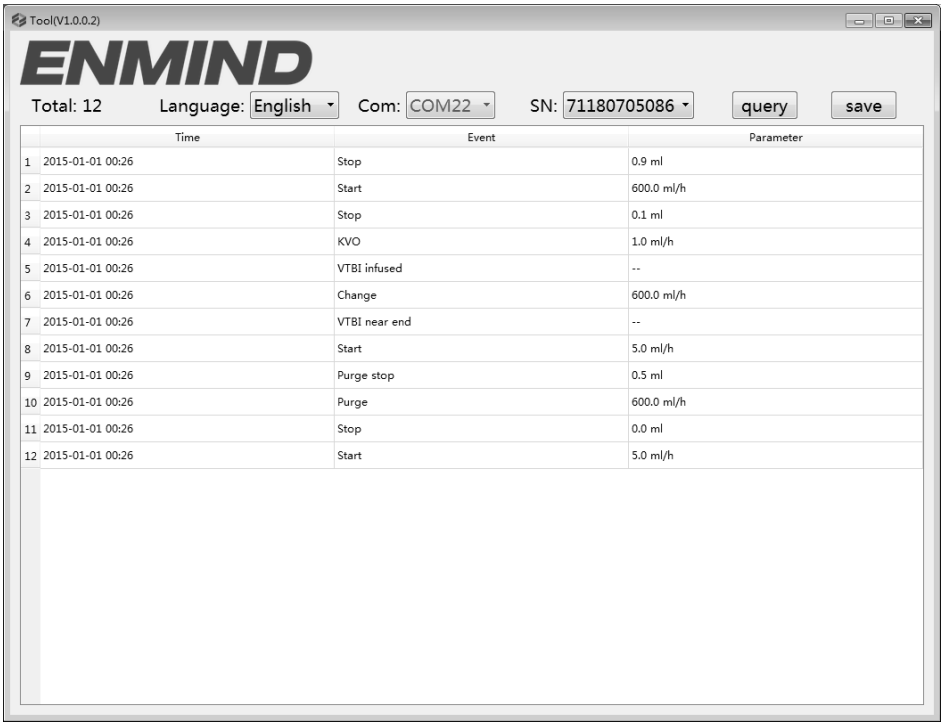

	Time	Event	Parameter
1	2015-01-01 00:26	Stop	0.9 ml
2	2015-01-01 00:26	Start	600.0 ml/h
3	2015-01-01 00:26	Stop	0.1 ml
4	2015-01-01 00:26	KVO	1.0 ml/h
5	2015-01-01 00:26	VTBI infused	--
6	2015-01-01 00:26	Change	600.0 ml/h
7	2015-01-01 00:26	VTBI near end	--
8	2015-01-01 00:26	Start	5.0 ml/h
9	2015-01-01 00:26	Purge stop	0.5 ml
10	2015-01-01 00:26	Purge	600.0 ml/h
11	2015-01-01 00:26	Stop	0.0 ml
12	2015-01-01 00:26	Start	5.0 ml/h

（5）Data save，click software UI 『Save』button，we can save the historical data as excel file.

（6）Device exit historical export UI. After the data export, click the device button 『Clear』to exit the historical data export UI, the system will release the serial port, and we can connect the next syringe pump to export the historical data.

8.5 System

Click『System』under the menu interface, enter the system information setting interface

8.5.1Language

This equipment supports simplified Chinese, English,Spanish etc.Click『Language』to change device language.

8.5.2SN (Serial Number)

Check the serial number of the equipment, and user can't modify the serial number.

8.5.3Version

Check the software version in this interface.

8.6 Electronic Memory Function

After turning off the equipment, the electronic memory function can be saved for 10 years at least.

When the power failure time is ≤30s, the alarm setting before power failure will be automatically recovered.

Chapter9 Alarm Prompt and Troubleshooting

9.1 Introduction to Alarm Level

During infusion preparation and infusion, this equipment will alarm when reaching or exceeding the set alarm threshold value and prompt with sound, light and text. According to the importance of alarm information as well as the emergency and safety, the alarm is divided into three levels: high, middle and low. Please refer to table below for details:

Alarm Level	Sound Signal Interval	Light color /flash frequency
High alarm	10s	Red indicator flashes /2.0±0.6Hz
Middle alarm	15s	Yellow indicator flashes / 0.6±0.2Hz
Low alarm	Once, not repeated	Yellow indicator lights on

If there's alarm, the system will display the alarm interface. Click 『OK』 to exit the alarm interface. Click『Mute』to mute, if alarm is not eliminated, the alarm sound will be sent out 2min later.

⚠ Warning: ● Some alarm threshold values of this equipment can be set by the user, for example: occlusion pressure, reminder alarm, VTBI infused pre-alarm, alarm sound volume and so on, the user shall confirm the parameters when set the alarm threshold value, otherwise, it may possibly influence the alarm function or infusion safety.

9.2 Multi-level Alarm Rules

When there're several alarms, the system will alarm according to the following rules:

Multilevel Alarm	Rules
Several alarms of different levels generate simultaneously	Display the alarms of highest level with sound, light and text, report middle alarm after eliminating all alarms of highest level
Several alarms of same level generate simultaneously	Alarm circularly by turns, the time interval is 3s

9.3 Alarm Handle

⚠ Warning: ●When there's alarm, please check the condition of the patient, remove the reason of alarm and then continue working.

Please refer to Appendix C for the alarm solution.

9.4 Malfunction Analysis and Solution

When there's malfunction, the syringe pump screen will display the malfunction alarm information, this item is the alarm of high level. Please eliminate the malfunction alarm according to the prompt. If it can't be eliminated, please stop the equipment, contact our company to repair and test the equipment, do not put it into operation before the equipment has passed the inspection, otherwise, it may possibly cause unpredictable harm if it works with malfunction.

If the equipment is on fire/burns for unknown reason, or has other abnormal conditions, the user shall immediately cut off power supply and contact our customer service department.

Chapter10 Maintenance

10.1 Cleaning, disinfecting and sterilizing

⚠ Warning:

● Please cut off power supply and unplug the DC /AC power wire before cleaning the equipment.

● During cleaning and disinfecting, please keep the equipment horizontal and upwards to protect the equipment and accessories from fluid.

10.1.1 Cleaning

(1) The daily maintenance is mainly to clean the housing and pump body. It is inevitable that fluid/drug may flow in the equipment during infusion. Some fluid drug may corrode the pump and cause working fault. After infusion, please timely clean the equipment, wipe it with moist and clean soft fabric, and then naturally dry it.

(2) When cleaning the equipment interface, please wipe it with dry and soft fabric, confirm the interface is dry before using.

(3) Please do not soak the equipment in water. Although this equipment has certain waterproof function, when fluid splashes on the equipment, please check if it works normally, perform insulation and electric leakage test if needed.

10.1.2 Disinfecting

(1) Disinfecting may possibly cause harm of certain degree to the equipment, it is suggested to disinfect the equipment if it is needed.

Please disinfect the equipment with common disinfecting agent such as 50% sodium hypochlorite, cidex 2% glutaraldehyde + activating agent, 70% ethanol, 70% isopropyl alcohol and so on. Please follow the instructions of the disinfecting agent.

(2) After disinfecting, wet the soft fabric with warm water, dry the fabric and then wipe the equipment with it.

(3) Do not sterilize the equipment with high pressure steam sterilizer, do not dry the equipment with dryer or similar product.

⚠ Warning: ● Please do not adopt Cidex OPA orthophthalaldehyde, methyl ethyl ketone or similar solvent, otherwise, it may corrode the equipment.

10.2 Periodical maintenance

⚠ Notes:

● The medical mechanism shall set up complete maintenance plan, otherwise, it may possibly cause the equipment malfunction or fault, and may possibly hurt the physical safety.

● In order to ensure the safe use and prolong the service life of the equipment, it is suggested to periodically maintain and check it once every 6 months. Some items shall be maintained by the user, and some items shall be maintained by the dealer of the equipment.

● Please timely contact our company if the equipment is found defective.

10.2.1 Check the Appearance

1) The appearance of the equipment shall be clean and under good condition without crack and water leakage.
2) The buttons are flexible and effective without invalid phenomenon; the sensitivity of the touch screen is normal,
3) The slider of the syringe pump is flexible in movement, and the clamp is ok.
4) The power wire is under good condition and installed tightly.
5) After connecting with external power supply, check if the AC indicator of the equipment AC indicator lights on normally.
6) Adopt the accessories designated by our company.
7) The environment meets the requirements.

10.2.2 Performance Check

1) Self-test and normal infusion function.
2) Alarm function normal
3) Battery performance.

10.2.3 Maintenance Plan

The following check/maintenance items must be performed by the professional technician recognized by our company. If the following maintenances are necessary, please contact our company. Please clean and disinfect the equipment before testing or maintaining.

Maintenance Items	Cycle
Safety check according to IEC 60601-1	Once every 2 years, please check after replacing the printed circuit board assembly or the equipment is dropped or knocked.
Preventive system maintenance items (pressure calibrate, sensor calibrate, pump)	Once every 2 years, when the occlusion alarm, or infusion accuracy is doubt to be abnormal
Brand of user-defined syringe,infusion accuracy calibration	Using the equipment for the first time, syringe brand using for the first time, reusing the equipment after stopping for a very long period.

10.3 Add new brand and Calibration

In the 『System』submenu, click『Brand maintenance』 to enter into brand setting interface, create the consumables brand, delete and calibrate the brand.

⚠Warning: ● It is suggested to contact our company or local dealer, and customize and calibrate it by professional technician, otherwise, it can't guarantee the infusion accuracy.

⚠Note: ● The built-in brand of the system shall not be deleted.

(1) Add new brand

⚠Note: ●If the actual using syringe brand is not listed in the system built-in brand, please add the syringe brand in this interface.

Please follow the below steps to add a new brand:

1) Click『Brand』, Edit syringe brand name.
2) Click『Size』, Select syringe size.
3) Install syringe, pull the syringe piston beyond size scale line a little, press and hold on 【bolus】, push the piston to the corresponding size line.
4) Press 【start】, begin calibration, wait the calibration done.
5) Repeat above step 2~step 4, complete the new brand other size parameters
6) Press , page down, find those different size syringe technical parameters, "Out diameter", "Full range length", "Empty Space", manually input the parameters to other same syringe pumps after edit name

(2) Delete brand

Enter into『Delete』interface, click it to delete user-defined syringe brand.

(3) Calibration

⚠Note

- When first time use pump need calibration
- When added new brand need calibration
- When accuracy is not good need calibration.

Calibrating Steps:

Automatic:

1) Select syringe brand.
2) Select syringe size.
3) Install syringe, pull the syringe piston beyond size scale line a little, press and hold on 【bolus】, push the piston to the corresponding size line.
4) Press 【start】, begin calibration
5) Calibration completed.

Manual:

1) Select syringe brand.
2) Select syringe size.

3)Turn down to the second page.

4)Click to Input "Outer diameter", "Full range length", "Empty Space" parameters.

5)Calibration completed.

10.4 Repair

10.4.1 Normal Repair Process

Please contact our company or authorized service personnel to repair if there's any fault, do not disassemble and repair the equipment. After repair, please perform overall test for the equipment. Our company may provide the circuit diagram and components list to the authorized repair technician if needed.

10.4.2 Maintenance for Long Term Store

If the equipment won't be used for a long period, please take out the battery, and pack it with the equipment in the package, and store it in the shade, cool and dry place without direct sunlight.

The following operations are necessary for using it again:

1. Verify the flow rate accuracy to avoid unconformity between the syringe apparatus parameters in the equipment and the actual parameters after it hasn't be used for a long period or caused by other reasons, otherwise, it may cause infusion error, influence the therapeutic effects and even cause medical negligence.

2. Perform occlusion alarm test.

3. Test the battery discharging and charging duration to confirm that the battery is also usable.

10.5 Equipment Components/Accessories

⚠ Warning: ● Only the components and accessories designated by our company shall be adopted, otherwise, it may possibly damage the equipment or drop the equipment performance.

Variety	Name
Optional configuration	Wifi module
	IrDA module
Equipment Components	Battery
	Pole clamp
	Power wire
	Handle

10.6 Production Date

Please refer to the label of the product.

10.7 Recycling

The normal service life of this equipment is 10 years, and depends on the use frequency and maintenance. The equipment must be rejected after reaching the service life, please contact the manufacturer or the dealer to get more detailed information.

1. The obsolete equipment may be returned to the original dealer or manufacturer.
2. The used lithium-ion polymer battery has the same treatment method, or according to the applicable laws and regulations.
3. Please handle according to the equipment rejecting flow of your medical mechanism.

Chapter11 Battery

This equipment is equipped with rechargeable lithium-ion polymer battery to ensure the normal infusion when the equipment is moved or the external power supply is cut off.

When connecting external power supply, no matter the equipment is power on or not, the battery is charged. When charging, the equipment screen displays the battery charging indication icon . In case only built-in battery is adopted for supplying power, and when the remained battery is less than 20%, please connect the equipment with external power supply to charge the battery.

⚠ Warning: ● Only the battery designated by our company shall be adopted.

11.1 Check the Battery Performance

The performance of the built-in battery may drop according to the using duration, it is suggested to check the battery once a month.

(1) Disconnect the equipment from the patient, and stop all infusion.

(2) Supply public power to the equipment to charge the battery for 5h at least.

(3) Supply power to the syringe pump only with battery, infuse at the rate of 5ml/h, test the time till the battery runs down and the equipment is turned off.

- If the infusion time exceeds 10h, the battery keeps at good status.

- If the infusion time exceeds 7h but less than 10h, the battery starts deterioration, but it can be used temporarily.

- If the infusion time is less than 7h, the battery is reaching the service life, please replace the battery.

11.2 Replaced the Battery

It is recommended to replace the battery every 2 years, it is suggested to replace the battery by the dealer or manufacturer.

The steps of replacing battery are shown as below:

(1) Cut off the power supply of the equipment, disconnect the power cable. Open the cover of battery chamber and take out the battery.

(2) Push the new battery into the battery chamber, and insert in the battery fastener.

(3) After replacing the battery, install the battery cover, and check the battery.

⚠ Warning: ● When replace the battery, please do not touch the 12V DC plug inside of the batter Chamber.

Chapter12 After Sale Service

This product offers 1-year free warranty after purchase. The warranty period is from the installation date listed on the “Warranty Card”. The “Warranty Card” is the only voucher for calculating the warranty period, in order to maintain your benefit, please carefully fill into and keep the “Warranty Card”, and hand over the copy for the company to the installation technician.

The damages of the equipment caused by the following shall not enjoy free warranty service.

1. Fault caused by incorrect operation, unauthorized refitting or repair.

2. The damages caused by incorrect operation during the transportation process after purchase.

3. The fault and damages caused by fire, salt injury, toxic gas, earthquake, windstorm, flood, abnormal voltage and other natural disasters.

For the damages or faults mentioned above, our company provides repair services but charge at repair cost.

Chapter13 Appendix

Appendix A Start Up Graphs and Trumpet Curves

Appendix A. 1 Start-up Graphs

Brand: Double-Dove Size:50/60ml
Flow Rate: 1ml/h
Measurement Interval: $\Delta t = 0.5$min
Measurement duration: T = 2h

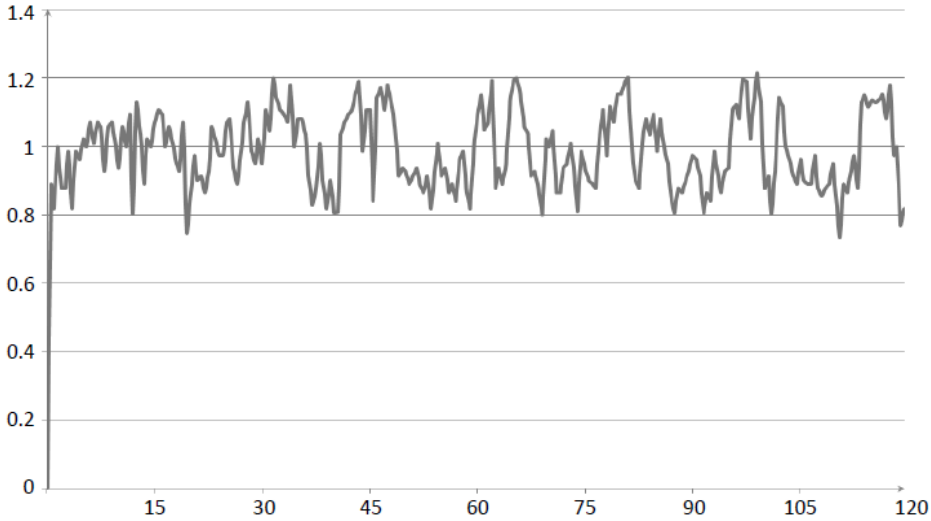

Graph 1 Start-up graph: Flow rate 1 (ml/h) against time (min) plotted from data gathered during the first 2 h of the test period

Brand: Double-Dove Size:50/60ml
Flow Rate: 5ml/h
Measurement Interval: $\Delta t = 0.5$min
Measurement duration: T = 2h

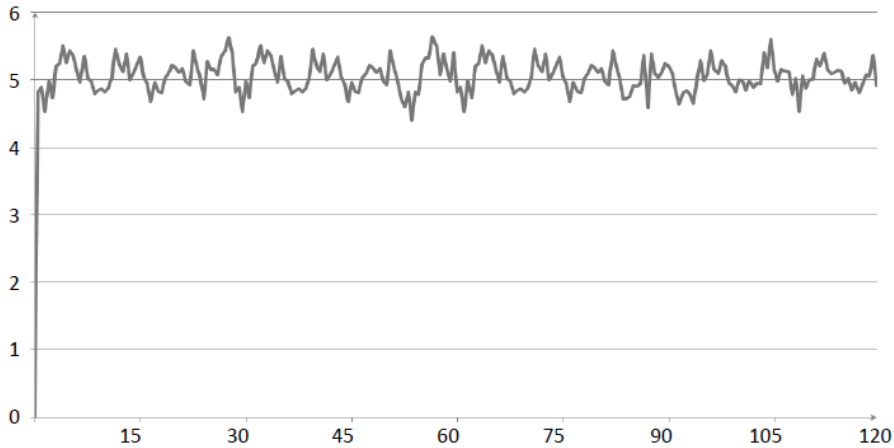

Graph 2 Start-up graph: Flow rate 5 (ml/h)against time (min) plotted from data gathered during the first 2 h of the test period

Appendix A.2 Trumpet Curves

Brand: Double-Dove Size:50/60ml

Flow Rate: 1ml/h

Measurement Interval: $\Delta t = 0.5$min

Measurement duration: T = 2h

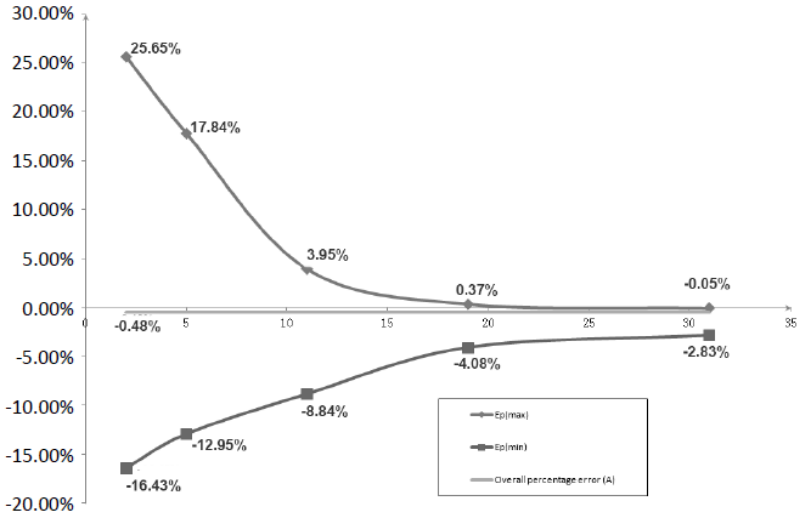

Graph 3 Trumpet curve: Percentage variation Ep against observation window duration P (min) and the overall mean percentage error A plotted from data gathered during the second hour of the test period

Brand: Double-Dove Size:50/60ml

Flow Rate:5ml/h

Measurement Interval: $\Delta t = 0.5$min

Measurement duration: T = 2h

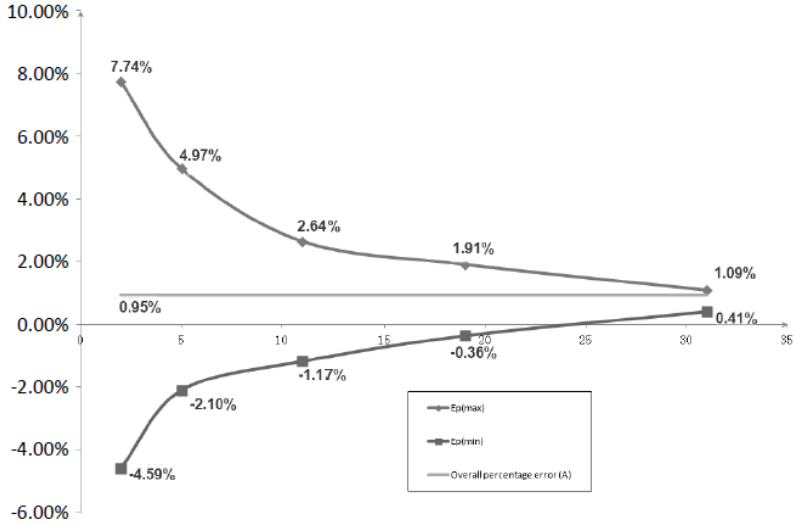

Graph 4 Trumpet curve: Percentage variation Ep against observation window duration P (min) and the overall mean percentage error A plotted from data gathered during the second hour of the test period

Appendix B Occlusion Response Property

EN-S7 Smart Delay and Possible Dose

Flow Rate (ml/h)	Occlusion Pressure (mmHg)		Time to occlusion alarm(min)	Max bolus (ml)
1	Low	150	0h38min40sec	0.046
	High	975	2h29min0sec	0.109
5	Low	150	0h13min55sec	0.053
	High	975	0h31min43sec	0.086

EN-S7 Delay and Possible Dose

Flow Rate (ml/h)	Occlusion Pressure (mmHg)		Time to occlusion alarm (min)	Max bolus (ml)
1	Low	225	0h49min18sec	0.039
	High	900	2h11min0sec	0.085
5	Low	225	0h14min20sec	0.040
	High	900	0h29min46sec	0.077

⚠Notes: The alarm pressure intensity error for EN-S7Smart is ±15% or ±100mmHg, the higher value shall be taken;
The alarm pressure intensity error for EN-S7 is ±20% or ±150mmHg, the higher value shall be taken.

⚠Notes:

- Conditions for above testing data: Syringe Brand: Double-Dove Size:50/60ml
- The occlusion alarm pressure, alarm delay time and bolus are influenced by the test conditions.
- The above data is the typical value under the test conditions, please see the test data of the product for the actual data, the data may be different if the test conditions are different.

Appendix C Alarm and Solution

Alarm Type	Alarm Level	Reason	Solution
VTBI infused	High	The preset value infusion Completion.	Press【Stop】button to stop alarm.
Syringe empty	High	The liquid medicine in the syringe is empty.	Press 【Stop】 button to stop the alarm.
Pressure high	High	1. Line occlusion during infusion.	Click『Mute』to silence, Manually solve the problem of occlusion, Press 【Start】button to restart infusion.
		2. Fluid/drug in the infusion line of high viscosity, while the system occlusion level is set too low.	Rise the alarm Level, Press 【Start】button to restart infusion.
		3. The pressure sensor is damaged.	Please contact the dealer or manufacturer for repair.
Battery empty	High	1.When power is supplied by the built-in battery only, under low battery, the alarm duration is >30min.	Immediately connect to external power supply.
		2. Battery aging or the equipment charging circuit is fault.	Please contact the dealer or manufacturer for repair.
Check syringe	High	Syringe drop off during infusion.	Reinstall the syringe.
KVO finished	High	KVO working time reached 30min, syringe pump stops working.	Press 【Stop】button to stop alarm
Drug dose limits exceeded	High	While using drugs in drug library to infuse, alarm will be triggered if max dose limit in certain time is exceeded the preset limits.	Press 【Stop】button to stop alarm.
System error	High	If system self-check fail or internal fault, system error alarm will give with code number.	Restart device to check whether alarm eliminated, if still exist, contact maintenance personnel.

Alarm Type	Alarm Level	Reason	Solution
VTBI near end	Middle	During infusion, the remaining time of preset value reaches or is less than the set nearing completion time.	This alarm can't be eliminated, and waits till infusion completes.
Syringe near empty	Middle	The syringe is near empty status which is calculated by checking the liquid medicine remaining in the syringe by current flow rate.	This alarm can not be eliminated, waiting until syringe is empty.
Occlusion pre alarm	Middle	Line pressure close to preset occlusion pressure level.	Check if there is occlusion in line and click OK to eliminate alarm.
Drop in pressure	Middle	Pressure in line is dropped in sudden.	Check extension line or patient connection. Click OK to eliminate alarm.
Battery nearly empty	Middle	1. When power is supplied only with the built-in battery, under low battery, the alarm duration is >30min.	The alarm automatically eliminates after connecting the external power supply.
		2. Battery aging or the equipment charging circuit is fault.	Please contact the dealer or manufacturer for repair.
No battery inserted	Middle	Battery is removed.	Keep connecting with external power supply, reinstall the battery.
Reminder alarm	Middle	After installing syringe tube , under non-working or alarm state, it is not operated within the set time of the system.	Click any button to stop.
Standby time expired	Middle	During standby, after reaching the standby time.	Press 【Stop】button to stop alarm.
No power supply	Low	Under ON state, AC power supply is adopted, but the AC power wire is dropped during the process.	The alarm automatically eliminates after connecting the external power supply.

⚠Note: When alarm rings, click the 『Mute』 icon on the screen to temporarily stop sound alarm for 2min.

Appendix D Electro Magnetic Compatibility declaration

This product needs special precautions regarding EMC and needs to be installed and put into service according to the EMC information provided, and this unit can be affected by portable and mobile RF communications equipment.

⚠Caution:

- This unit has been thoroughly tested and inspected to assure proper performance and operation!
- This machine should not be used adjacent to or stacked with other equipment and that if adjacent or stacked use is necessary, this machine should be observed to verify normal operation in the configuration in which it will be used.

⚠Warning:

The use of ACCESSORIES, transducers and cables other than those specified, with the exception of transducers and cables sold by the MANUFACTURER of the Syringe pump as replacement parts for internal components, may result in increased EMISSIONS or decreased IMMUNITY of the Syringe pump.

<table>
<tr><th colspan="3">Guidance and manufacture's declaration – electromagnetic emission</th></tr>
<tr><td colspan="3">The Syringe pump is intended for use in the electromagnetic environment specified below. The customer or the user of the Syringe pump should assure that it is used in such an environment.</td></tr>
<tr><th>Emission s test</th><th>Compliance</th><th>Electromagnetic environment – guidance</th></tr>
<tr><td>RF emissions
CISPR 11</td><td>Group 1</td><td>The Syringe pump uses RF energy only for its internal function. Therefore, its RF emissions are very low and are not likely to cause any interference in nearby electronic equipment.</td></tr>
<tr><td>RF emissions
CISPR 11</td><td>Class A</td><td rowspan="3">The Syringe pump is suitable for use in all establishments, including domestic establishments and those directly connected to the public low-voltage power supply network that supplies buildings used for domestic purposes.</td></tr>
<tr><td>Harmonic emissions
IEC 61000-3-2</td><td>Not applicable</td></tr>
<tr><td>Voltage fluctuations/ flicker emissions
IEC 61000-3-3</td><td>Not applicable</td></tr>
</table>

Guidance and manufacture's declaration – electromagnetic immunity			
The Syringe pump is intended for use in the electromagnetic environment specified below. The customer or the user of the Syringe pump should assure that it is used in such an environment.			
Immunity test	**IEC 60601 test level**	**Compliance level**	**Electromagnetic environment - guidance**
Electrostatic discharge (ESD) IEC 61000-4-2	±6 kV contact ±8 kV air	±8 kV contact ±15 kV air	Floors should be wood, concrete or ceramic tile. If floor are covered with synthetic material, the relative humidity should be at least 30%.
Electrical fast transient/burst IEC 61000-4-4	±2 kV for power supply lines +1 KV for input/output lines	±2kV for power supply lines	Mains power quality should be that of a typical commercial or hospital environment.
Surge IEC 61000-4-5	± 1 kV line(s) to line(s) +2 KV line(s)to earth	± 1 kV line(s) to line(s) +2 KV line(s)to earth	Mains power quality should be that of a typical commercial or hospital environment.
Voltage dips, short interruptions and voltage variations on power supply input lines IEC 61000-4-11	<5% UT (>95% dip in UT) for 0.5 cycle 40% UT (60% dip in UT) for 5 cycles 70% UT (30% dip in UT) for 25 cycles <5% UT (>95% dip in UT) for 5 sec	<5% UT (>95% dip in UT) for 0.5 cycle 40% UT (60% dip in UT) for 5 cycles 70% UT (30% dip in UT) for 25 cycles <5% UT (>95% dip in UT) for 5 sec	Mains power quality should be that of a typical commercial or hospital environment. If the user of the Syringe pump requires continued operation during power mains interruptions, it is recommended that the Syringe pump be powered from an uninterruptible power supply or a battery.
Power frequency (50Hz/60Hz) magnetic field IEC 61000-4-8	3 A/m	400A/m	Power frequency magnetic fields should be at levels characteristic of a typical location in a typical commercial or hospital environment.
NOTE UT is the a.c. mains voltage prior to application of the test level.			

Guidance and manufacture's declaration – electromagnetic immunity			
The Syringe pump is intended for use in the electromagnetic environment specified below. The customer or the user of Syringe pump should assure that it is used in such an environment.			
Immunity test	**IEC 60601 test level**	**Compliance level**	**Electromagnetic environment - guidance**
Conducted RF IEC 61000-4-6	3 Vrms 150 kHz to 80 MHz	10 Vrms	Portable and mobile RF communications equipment should be used no closer to any part of the Syringe pump, including cables, than the recommended separation distance calculated from the equation applicable to the frequency of the transmitter. Recommended separation distance d = 1.167 $d = 1.167\sqrt{P}$ 80 MHz to 800 MHz $d = 2.333\sqrt{P}$ 800 MHz to 2.5 GHz Where P is the maximum output power rating of the transmitter in watts (W) according to the transmitter manufacturer and d is the recommended separation distance in meters (m). Field strengths from fixed RF transmitters, as determined by an electromagnetic site survey, a should be less than the compliance level in each frequency range.[b] Interference may occur in the vicinity of equipment marked with the following symbol:
Radiated RF IEC 61000-4-3	3 V/m 80 MHz to 2.5 GHz	10 V/m	
NOTE 1 At 80 MHz and 800 MHz, the higher frequency range applies. NOTE 2 These guidelines may not apply in all situations. Electromagnetic propagation is affected by absorption and reflection from structures, objects and people.			
a Field strengths from fixed transmitters, such as base stations for radio (cellular/cordless) telephones and land mobile radios, amateur radio, AM and FM radio broadcast and TV broadcast cannot be predicted theoretically with accuracy. To assess the electromagnetic environment due to fixed RF transmitters, an electromagnetic site survey should be considered. If the measured field strength in the location in which the Syringe pump is used exceeds the applicable RE compliance level above the Syringe pump should be observed to verify normal operation. If abnormal performance is observed, additional measures may be necessary, such as reorienting or relocating the Syringe pump. b Over the frequency range 150 kHz to 80 MHz, field strengths should be less than 3 V/m.			

Recommended separation distances between

portable and mobile RF communications equipment and the Syringe pump .

The Syringe pump is intended for use in an electromagnetic environment in which radiated RF disturbances are controlled. The customer or the user of the Syringe pump can help prevent electromagnetic interference by maintaining a minimum distance between portable and mobile RF communications equipment (transmitters) and the Syringe pump as recommended below, according to the maximum output power of the communications equipment.

Rated maximum output power of transmitter (W)	Separation distance according to frequency of transmitter (m)		
	150 KHz to 80 MHz $d = 1.167\sqrt{P}$	80 MHz to 800 MHz $d = 1.167\sqrt{P}$	800 MHz to 2.5 GHz $d = 2.333\sqrt{P}$
0.01	0.117	0.117	0.233
0.1	0.369	0.369	0.738
1	1.167	1.167	2.333
10	3.689	3.689	7.379
100	11.667	11.667	23.333

For transmitters rated at a maximum output power not listed above, the recommended separation distance d in meters (m) can be estimated using the equation applicable to the frequency of the transmitter, where P is the maximum output power rating of the transmitter in watts (W) according to the transmitter manufacturer.

NOTE 1 At 80 MHz and 800 MHz, the separation distance for the higher frequency range applies.

NOTE 2 These guidelines may not apply in all situations. Electromagnetic propagation is affected by absorption and reflection from structures, objects and people.

Appendix E Wireless Module Information

Parameter Name	Parameter Value
Frequency Range	2.412GHz-2.482GHz
Modulating Type	OFDM, CCK, DSSS
Effective Radiating Power	< 20dBm

Appendix F Factory Default Data Set

Parameters	Default Setting	Parameters	Default Setting
KVO rate	1ml/h	Sound	10%
Occlusion pressure	450mmHg	Screen lock	ON
Finish pre-alarm	2min	Brightness	100%
Reminder alarm	2min	Night mode	OFF
Pressure unit	mmHg	Nurse call	OFF
Micro mode	OFF	Drug Library	None
Commonly used syringe brand	Double-Dove	Relay mode	OFF

34-000007-00

Version:V5.0

Revising Date:2020.3.12