Digitally signed by Lupic Constantin
Date: 2026.02.16 14:25:27 EET
Reason: MoldSign Signature
Location: Moldova
MOLDOVA EUROPEANA

MARK VIEW

ANKARA SERAMİK
U-70 BL
TS EN 60383-1

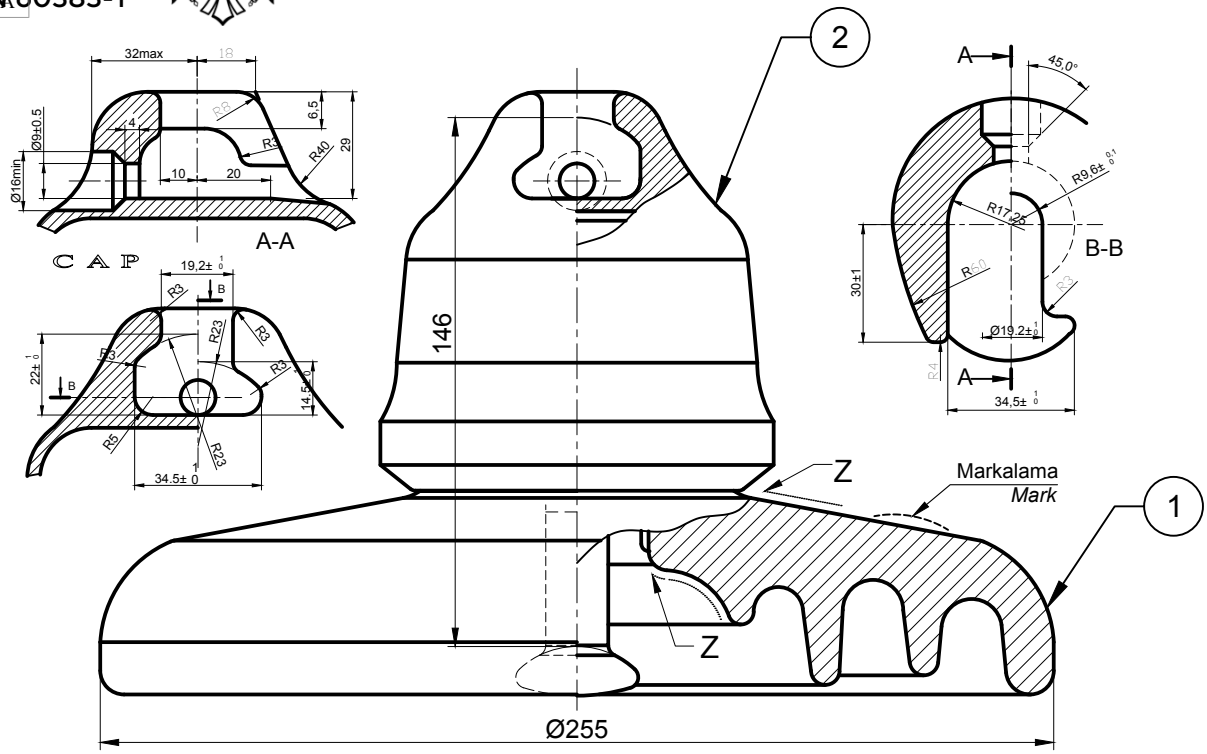

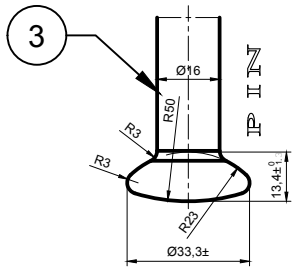

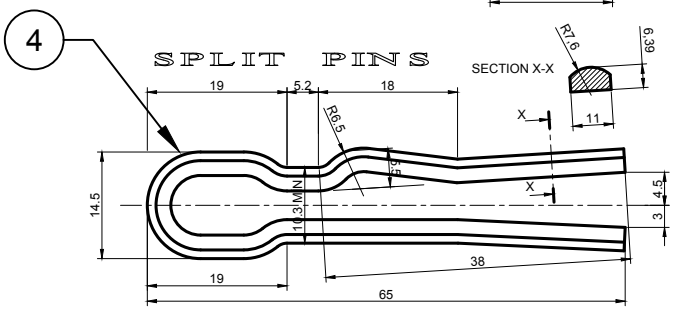

ELEKTRİKSEL PERFORMANS *ELECTRICAL PERFORMANCE (IEC 60383-1)*		
En Yüksek İşletme Gerilimi *(Maximum Operating Voltage)*	12 kV	
Kuruda Güç Frek. Ort. Atlama Gerilimi *(Dry Power Freq. Average Flashover Voltage)*	75 kV	
Yaşta Güç Frek. Ort. Atlama Gereilimi *(Wet Power Freq. Average Flashover Voltage)*	44 kV	
%50 Darbe Atlama Gerilimi *(50 % Impulse Flashover Voltage)*	Poz.	120 kV
	Neg.	125 kV
Güç Frek. 1 Dk. Dayanma Gerilimi *(Power Freq. 1 Min. Withstand Voltage)*	Kuru *(Dry)*	70 kV
	Yaş *(Wet)*	40 kV
Yıldırım Darbe Dayanma Gerilimi *(Lightning Impulse Withstand Voltage)*	110 kV	
Yağda Delinme Gerilimi *(Puncture Voltage In Oil)*	110 kV	

MEKANİKSEL PERFORMANS *MECHANICAL PERFORMANCE (IEC 60305)*	
Elektromekanik Kırılma Yükü *(Electromechanical Failing Load)*	70 kN

DİELEKTRİK PARÇALAR *(DIELECTRIC PARTS)*	
Malzeme *(Material) IEC 60672-3*	Porselen *(Porcelain)*
Kaçak Mesafesi *(Creepage Distance)*	(Z-Z) min. 300mm
Sır Rengi *(Glaze Color)*	Kahverengi *(Brown)*
Tolerans *(General Tolerance)*	DIN 40680
Ağırlık *(Weight)*	~6 kg

Poz. *(Pos.)*	Ürün No *(Product Not)*	Bileşen Parçaları *(Components Parts)*	Adet *(Pcs.)*	Malzeme *(Material)*
4	330000-907	Gupilya *(Split Pin)* U70-U100-120 (16A) Tipi	1	Paslanmaz Çelik *(Stainles Steel)*
3	330000-906	Metal Pim *(Metal Pin)* U70-U100 (16A)	1	Dövme Çelik *(Forged Steel)* Sıcak Daldırma Galvaniz *(Hot Dip Galvanized)*
2	330000-904	Metal Kep *(Metal Cap)* U70-U100-120 (16A)	1	Dökme Demir *(Cast Iron) GGG50* Sıcak Daldırma Galvaniz *(Hot Dip Galvanized)*
1	332001-000	U-70-BL (KM:300mm) Zincir Tipi İzolatör *(U-70-BL (CD:300mm) String Insulator)*	1	Porselen *(Porcelain)*

ALL DIMENSIONS ARE IN mm UNLESS OTHERWISE STATED

THIS DRAWING IS NOT TO BE COPIED OR THE INFORMATION HEREIN DIVULGED TO ANY THIRD PARTY OR USED FOR THE MAKING OF APPARATUS WITHOUT THE WRITTEN PERMISSION OF ANKARA SERAMİK A.Ş.

ANKARA SERAMİK
www.ankaraseramik.com
PORSELEN SAN. ve TİC. A.Ş.
PORCELAIN INDUSTRY OF TURKEY
1.ORGANİZE SAN.BÖL.OSMANLI CAD. NO:15 SİNCAN/ANKARA/TURKEY
TEL: (0312) 267 37 77 FAX: (0312) 267 27 77
info@ankaraseramik.com

Yayın Tarihi *(Release Date)*	02.02.2008		**Malzeme** *(Material)*	**Porselen** *(Porcelain)*	**Adet** *(Piece)*
Onay *(Approved By)*	İ.ŞAHİN		**Std. No.**	IEC 60305	
Kontrol *(Checked)*	Ö.ÇITAK		**Rev. No**		
Çizen *(Drawn By)*	Ö.ÇITAK		**Ürün no / Müşteri** *(Product No / Customer)*		**Ölçek** *(Scale)*
	U70 BL (CD:300mm) **ZİNCİR TİP İZOLATOR** *STRING INSULATOR*		***332001-000***		