Digitally signed by Grabazei Alexandru
Date: 2025.08.06 12:32:16 EEST
Reason: MoldSign Signature
Location: Moldova
MOLDOVA EUROPEANĂ

Lot 1

OIL CIRCUIT / ÖL KREISLAUF / CIRCUIT HUILE / CIRCUITO ACEITE / CIRCUITO OLIC

VALIDITY/GULTIG BIS/SERIE VALABLE/SERIE VALIDA	FROM/VON/DE/DA	TO/BIS/JUSQU'A'/FINO A
kW 75 - 50 Hz -	15/10/2007	
kW 75 - 60 Hz -	15/10/2007	

Pos	Code	Quantity		Name	Benennung	Designation	Descripcion	Denominazione
1	221606	1	1	minimum pressure valve	das Mindestdruckventil	soupape de min. press.	valvula min. pres.	valvola di min. pres.
2	132357	1	-	oil radiator	der Öl-Wasserkühler	radiateur huile	radiador aceite	radiatore olio
	132363	-	1	oil radiator	der Öl-Wasserkühler	radiateur huile	radiador aceite	radiatore olio
3	224048	1	1	thermostatic valve 55°	Thermostatisches Ventil 55°	soupape thermostatique 55°	valvula termostatica 55°	valvola termostatica 55°
4	223489	1	1	oil filter cartridge	der Ölfilterreinsatz	cartouche filtre huile	cartucho filtro aceite	cartuccia filtro olio
5	121035	1	1	extension	Verlängerung	rallonge	adaptador	prolunga uscita radiatore
6	160127	1	1	union F.F. 2"	der Kniestück F.F. 2"	coude F.F. 2"	codo F.F. 2"	gomito F.F. 2"
7	180336	2	2	screw TES.M12x25		vis TES.M12x25	tornillo TES.M12x25	vite TES.M12x25 zinc.
8	180461	2	2	washer D.12	die Unterlegsscheibe D.12	rondelle D.12	rondana D.12	rondella piana D.12
9	160248	5	5	reducing tapple nip. 1/1/4"-1"	Reduziernippel 1/1/4"-1"	injecteur 1/1/4"-1"	racorde 1/1/4"-1"	nipplo ridotto 1/1/4"-1"
10	160679	1	1	junction 1/1/4"-1"	die Muffe 1/1/4"-1"	raccord 1/1/4"-1"	manguito 1/1/4"-1"	riduzione 1/1/4"-1"
11	150524A	1	1	pipe equator 1"x700	der Verbindungsschlauch equator	tuyeau equator 1"x700	tubo equator 1"x700	tubo equator 1"x700
12	150519A	2	2	pipe equator 1"x2300	der Verbindungsschlauch equator	tuyeau equator 1"x2300	tubo equator 1"x2300	tubo equator 1"x2300
13	150347A	1	1	pipe equator 1"x3000	der Verbindungsschlauch equator	tuyeau equator 1"x3000	tubo equator 1"x3000	tubo equator 1"x3000
14	121034	1	1	extension 2"x80	Verlängerung 2"x80	rallonge 2"x80	adaptador 2"x80	prolunga 2"x80 zincata
15	160108	2	2	union M.F. 2"	der Kniestück M.F. 2"	coude M.F. 2"	codo M.F. 2"	gomito M.F. 2"
16	160267	3	3	nipple 2"	Nippel 2"	injecteur 2"	adaptador 2"	nipplo 2" trop.
17	150852	1	1	stainless steal piping 2"x1200	das Rohr aus Stahl 2"x1200	tuyau en acier 2"x1200	tubo acero 2"x1200	tubo acc. Inox 2"x1200
18	160288	1	1	reducing tapple nip. 1"-3/4"	Reduziernippel 1"-3/4"	injecteur 1"-3/4"	racorde 1"-3/4"	nipplo ridotto 1"-3/4" trop.
19	160219	1	1	junction 2"	die Muffe 2"	raccord 2"	manguito 2"	manicotto trop. 2"
20	150825	1	1	pipe SAE100RI 2"x890	der Verbindungsschlauch SAE100R	tuyeau SAE100RI 2"x890	tubo SAE100RI 2"x890	tubo SAE100RI 2"x890
21	160297	1	1	nipple 1"	Nippel 1"	injecteur 1"	adaptador 1"	nipplo 1" trop.
22	160258	1	1	nipple 2"	Nippel 2"	injecteur 2"	adaptador 2"	nipplo 2"
				GB	D	F	E	I

OIL CIRCUIT / ÖL KREISLAUF / CIRCUIT HUILE / CIRCUITO ACEITE / CIRCUITO OLIO
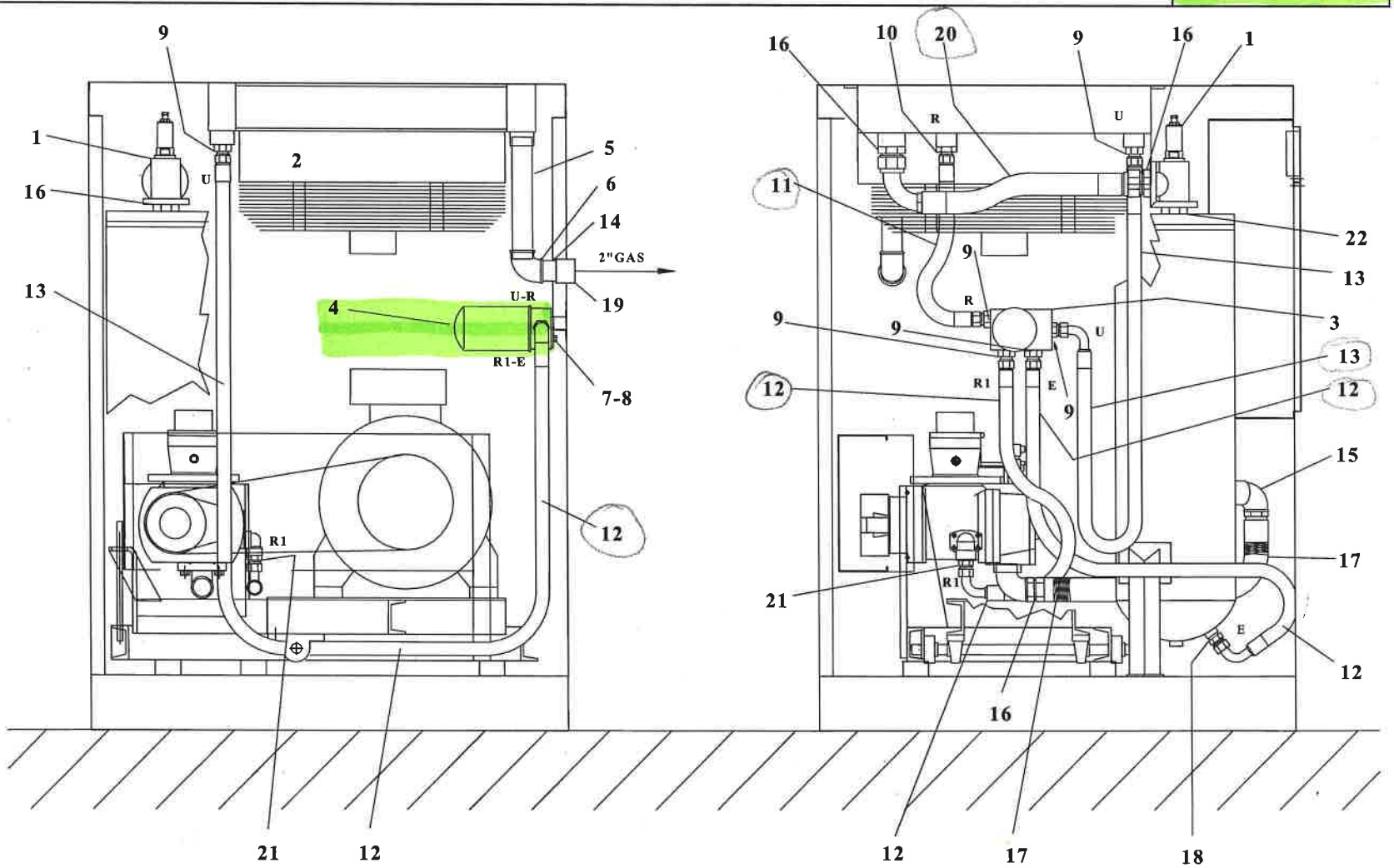
kW 75