FONA
CLOSER TO YOU

Art Plus Family

Digitally signed by Bolea Petru
Date: 2022.08.30 14:08:35 EEST
Reason: MoldSign Signature
Location: Moldova

PREMIUM TECHNOLOGY
FOR SUPERB QUALITY

PREMIUM TECHNOLOGY FOR SUPERB QUALITY

FONA Art Plus is an advanced digital panoramic system with the latest premium CdTe-CMOS sensor technology. It combines extraordinary image quality, sharpness and contrast with advanced diagnostic tools. Due to the special sensor technology and continuous autofocus function, FONA Art Plus always delivers properly focused images, in both Pan and Pan Ceph versions.

CDTE-CMOS SENSOR

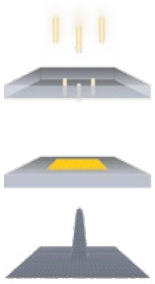

CCD/CMOS SENSOR

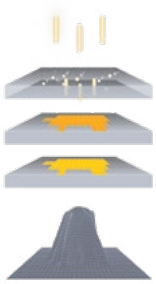

Premium Art Plus technology
Direct conversion of X-rays to electrical signals increases the image clarity and contrast while reducing the readout time and dose.

Traditional technology
Traditional acquisition uses conversion of X-rays to light before detection, causing some information loss, blurring and readout delays.

Wide focal zone up to 30 mm
Due to patented algorithms, the focal one is up to 30 mm wide, instead of traditional 4 mm. Your region of interest will always be in focus.

Latest sensor and autofocus technology for the best image quality

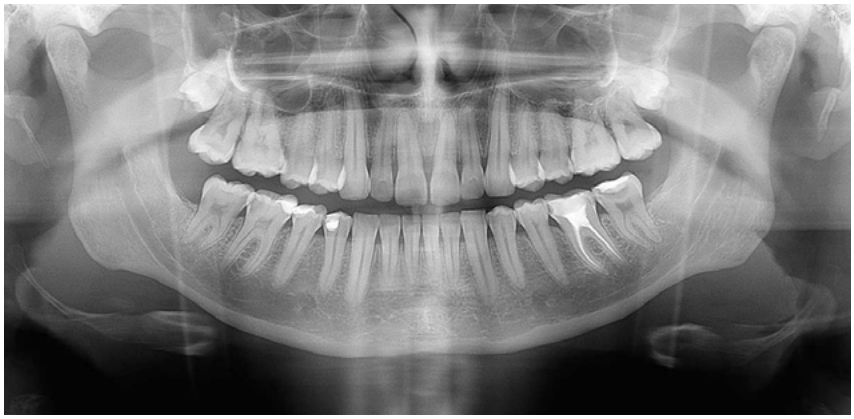

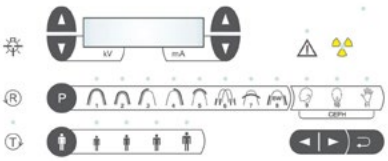

Only 2 steps to go
Simply select program (8 Pan or 3 Ceph) and patient size (4 options). All exposure settings will be set automatically. Presets can also be adjusted manually.

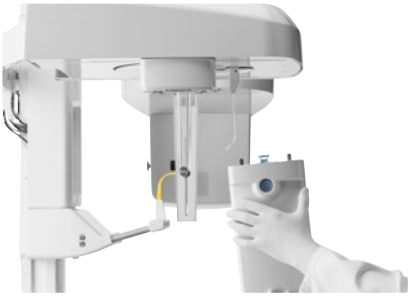

Single sensor for both applications
Get the best quality panoramic and cephalometric images. Just click the sensor to the position where you need it.

EXCELLENT IMAGE QUALITY

Latest direct conversion technology for high resolution, extraordinary sharpness, clarity and lower dose.

EASY TO OPERATE

Intuitive and fast setting of the exposure program with just 2 clicks.

CONTINUOUS AUTOFOCUS

No more blurred images and additional exposures – the region of interest is always in focus.

Receptor technology	CdTe (Cadmium Telluride) CMOS sensor
Image Resolution	>5 lp/mm
Dynamic range / Grayscale	16 bits / 65.536 gray shades
Exposure time Pano / Ceph	2.2 – 14.2 s / 8 – 10 s
PC connection	PCI express
Focal Spot	0.5 (IEC 60336)
Tube Voltage	61 – 85 kV
Tube Current	4 – 10 mA
Weight Pano / Ceph	98 kg / 120 kg

Panoramic programs	(1) Adult panoramic. (2) Child panoramic. (3) Left-Side Dentition. (4) Right-Side Dentition. (5) Anterior Dentition. (6) TMJ in normal occlusion and fully open. (7) Frontal view of Maxillary Sinus. (8) Bitewing.
Cephalometric programs	Antero-Posterior (AP). Latero-Lateral (LL). Carpus. Sub-Mento Vertex (SMV) in AP mode
Patient size presets	(1) Large. (2) Medium. (3) Small. (4) Child

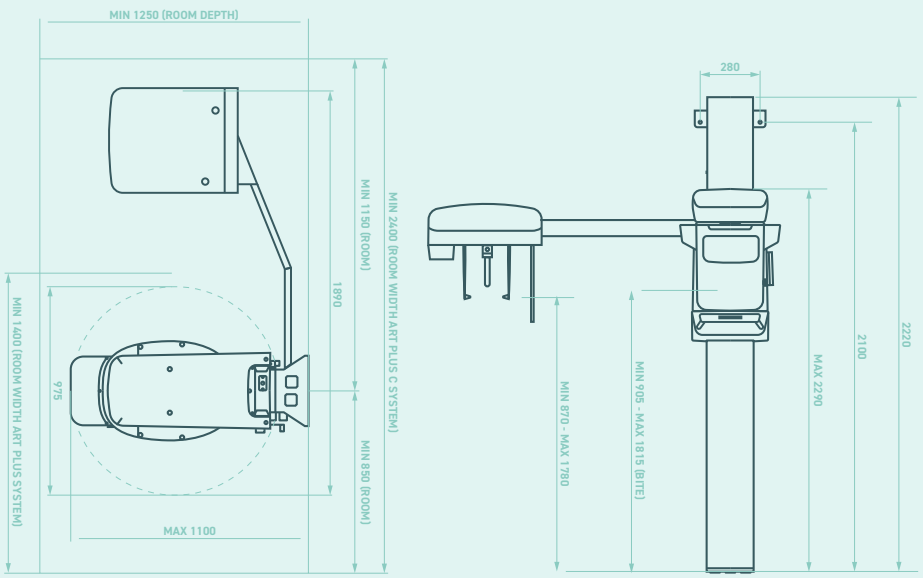

EVERY DENTAL SOLUTION YOU NEED.

Through more than 20 years of experience, and a deep understanding of the dental profession, we deliver complete, reliable and accessible Dental Imaging Solutions. Based in Assago (MI), Fona s.r.l., is a succesfull imaging manufacturing site with more than 10.000 panoramic units and 60.000 intraorals installed worldwide. Our international team is constantly on the move, meeting partners and dentists, so we can understand their needs and develop products that support and enhance their daily work.

ADVANCED DENTAL TECHNOLOGY

DIGITAL DENTISTRY

INTRAORAL IMAGING

EXTRAORAL IMAGING

INTRAORAL SENSORS

BASED IN ITALY, AVAILABLE WORLDWIDE

Copyright FONA s.r.l., All rights reserved, Subject to technical changes and errors in text, BRO002, v1, ENG, 202106

COUNT ON US

Clinical Cases

Online Training

Remote Support

HotLine support

HEADQUARTER

FONA s.r.l.
Via G.Galilei 11
20057 Assago (MI)
Italy

CONTACTS

info@fonaitaly.com
www.fonadental.com

CE 0051