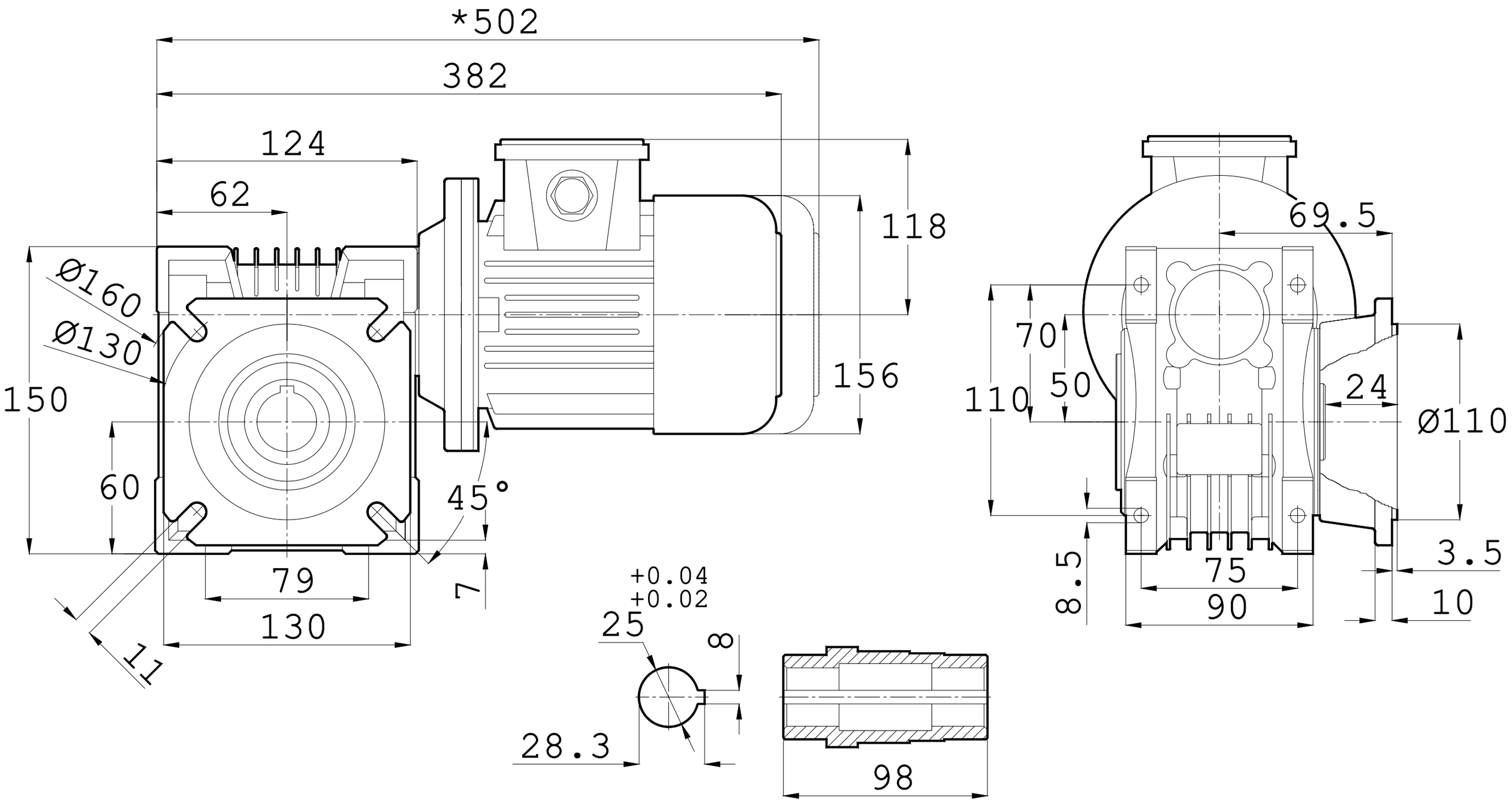

*:This dimension is for motors with brake.

Digitally signed by Cocîrlă Serghei
Date: 2021.06.09 13:27:52 EEST
Reason: MoldSign Signature
Location: Moldova