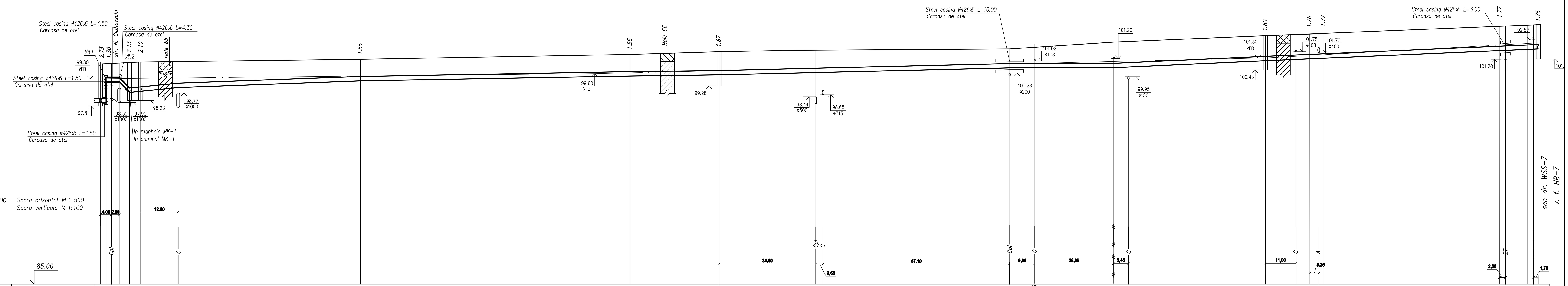

Horizontal scale M 1:500
Vertical scale M 1:100

Scara orizontal M 1:500
Scara verticala M 1:100

Level of pipe bottom	Cota de jos a tevii	98.08, 98.08, 99.66, 99.60, 99.60, 98.82, 98.90, 99.17, 99.65, 100.00, 100.08, 100.27, 100.28, 100.58, 100.585, 100.60, 101.10, 101.18, 101.24, 101.27, 101.28, 101.83, 101.92, 101.95
Designed ground level	Cota de proiect a terenului	
Natural ground level	Cota terenului	100.81, 100.90, 100.95, 101.00, 101.30, 101.60, 101.75, 101.95, 102.45, 102.90, 103.00, 103.05, 103.60, 103.70, 103.70
Type of pipe	Marcare tevii si tipul de izolare	P I P E PE100 SDR17 PN10 ø315; T E A V A PE100 SDR17 PN10 ø315
Base	Fundatie	Sand h=150mm K≥0.95; Crushed rock h=150mm; Nisip h=150mm K≥0.95; Pietris h=150mm
Length, m / Slope	Lungime, m / Panta	4.40; 0.17 / 3.60; 0.02 / 17.50; 0.0074 / 64.50; 0.004 / 87.30; 0.0025 / 32.35; 0.0048 / 104.55; 0.00054 / 37.25; 0.0093 / 54.10; 0.00866 / 98.15
Distance between manholes and turning points	Distanta	10.50, 4.00, 78.00, 87.30, 32.35, 195.90, 15.95, 4.75, 63.45, 10.00, 4.00
Number of manholes, turning points	Nr. caminului, punctului, unghiului cotului	1, 2 ПГ-3, Уг.1, Уг.2, ПГ-4, ПГ-5, Уг.3, Уг.4, Уг.5, Уг.6, 6

NOTE:

1. Existing crossing electric cables shall put in casing of asbestos-cement pipe cut along axis ø100 L=2m.
2. Before earth work commencement all points of determination to existing bends shall dig out and shall specify.
3. The distance between top of water pipe-line casing and trench bottom of heating main should be not less than 500mm at the water pipe-line and heating main crossing point.
4. Levels of existing services of crossing points shall cpecify on-site.
5. * - location of existing distribution pipe-line shall be changed temporarily if it is necessary.
6. Water pipe-line should lay into casing L=1.0m at the crossing points of power cables and communication cables.

NOTA:

1 Cablurile electrice existente se imbraca in carcasa din teava de azbestociment ø100 L=2m.
2. pana la demararea lucrarilor de terasament se descopera toate locurile de conectare la bransamentele existente si se precizeaza cota.
3. In locul intersectiei apeductului cu traseul termic distanta intre partea de sus a mantalei conductei si fundul canalului transeului termic trebuie sa fie de minimum 500 mm.
4. Cotele retelelor existente se precizeaza la fata locului.
5. * - conducta de distributie existenta temporar se reamplaseaza in cazul in care e necesar.
6. In locurile de intersectie cu cablurile electrice si legarile de cablu apeductul se instaleaza in carcasa L=1.0m.

Change	No.part	Page	No.doc	Signature	Date
Chief spec.	Gubareva				09.20
Designed	Vainer				09.20
Checked	Gubareva				09.20

3660-6-WSS

Rehabilitation of the land supply system in Balti municipality. Aqueduct from Fyodor Dostoevsky Street to Independentei Street, Sportiva Street to str. N. Gluhovski (stage I from str. Alexandr Puskin to str. N. Gluhovski).

External water supply network — Stage: WP, Page: 6, Total:

Longitudinal profile of pipe-line from well 1 up to wel 6.

INTEXNAUCA S.A. Chisinau 2020

Schim	Nr.sect.	Foaia	Nr.doc	Semnat.	Data
Sp. prin.	Gubareva				09.20
Elabor	Vainer				09.20
N. contr.	Gubareva				09.20

3660-6-AE

Reabilitarea sistemului de alimentare cu apa in mun. Balti. Apeduct de pe str. Fiodor Dostoievski pe str.Independentei, str. Sportiva pina str. N. Gluhovski) (etapa I de la str. Alexandr Puskin pina la str. N. Gluhovski

Rețea exterioară de alimentare cu apă — Faza: PE, Foaia: 6, Foi:

Profilul retelei de la caminul 1 pana la caminul 6.

INTEXNAUCA S.A. Chisinau 2020