Type	External dimension [mm]	Filters dimension [mm]	Quantity of filters	Filtration area [m2]	Range of efficiency [m3/h]		Weight of the laminar flow [kg]	Air intake dimensions [mm]
					for V=0,2 [m/s]	for V=0,45 [m/s]		
ALF 4/4	2600x2600	610x610 285x610	14 2	5,582	4019	9042	290	148x1260 + 148x1260 mm - both sides

A-A (1:4)

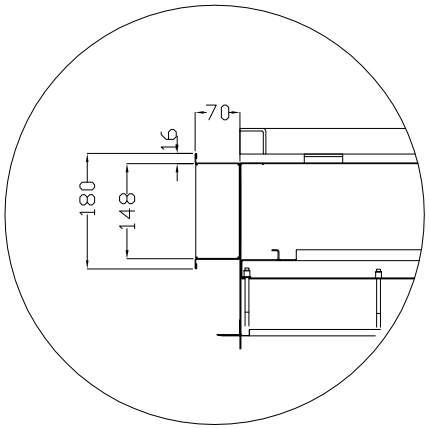

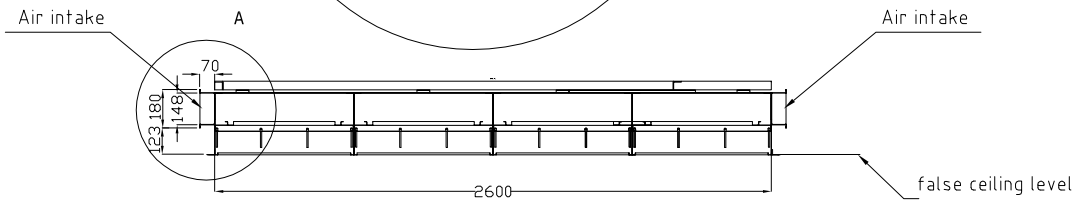

B-B (1:4)

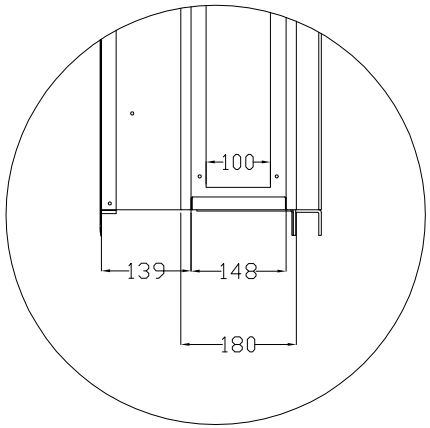

ALF 4/4

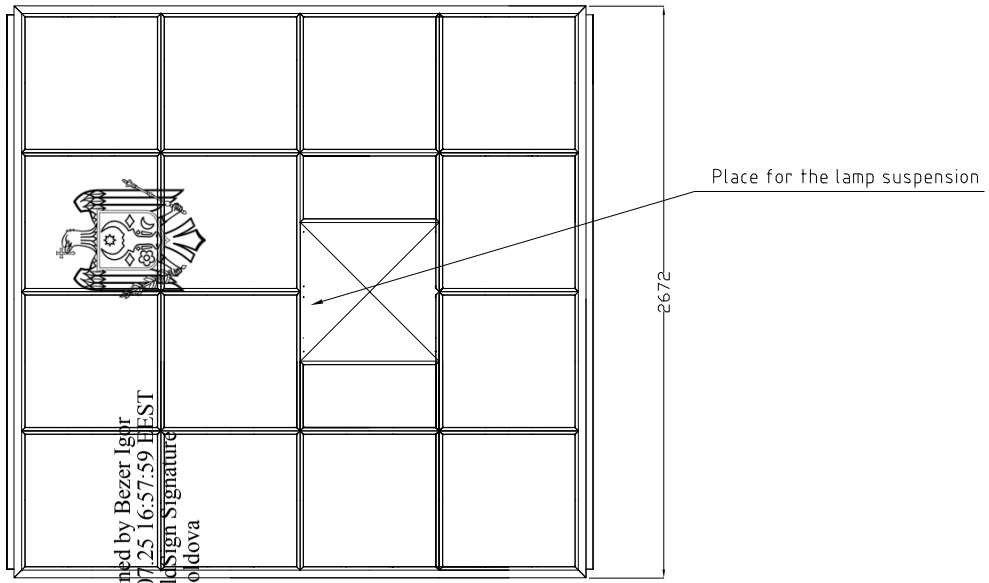

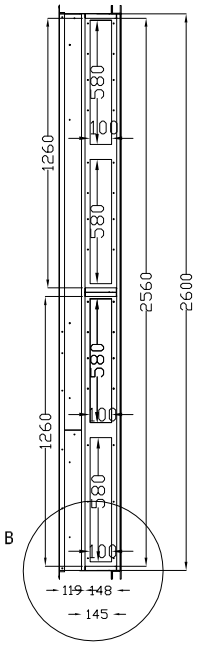

Digitally signed by Bezer Igor
Date: 2020.07.25 16:57:59 EEST
Reason: MoldSign Signature
Location: Moldova

All dimensions in mm

ALF 4/4				WORKSHOP DRAWINGS	
	Name and Surname	Signature:	Date:		
Drawn by:	Łuczak M.		01.2015	ALVO Spółka z ograniczoną odpowiedzialnością Sp. K. ul. Folwarkowa 21a, 64-030 Śmigiel Tel. +48 065 318 98 49 Tel/Fax. +48 065 318 98 56	
Checked by:	Kosmala K.		01.2015		
approved:	Cichocki M.		01.2015		
Scale:	Project: Laminar Flow ALF 4/4			Subject: Laminar Flow ALF 4/4	Fig.: 1