Digitally signed by Dimitriu Alina
Date: 2019.08.20 14:39:45 EEST
Reason: MoldSign Signature
Location: Moldova

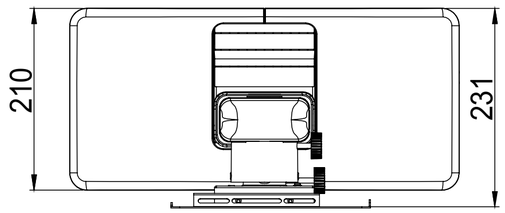

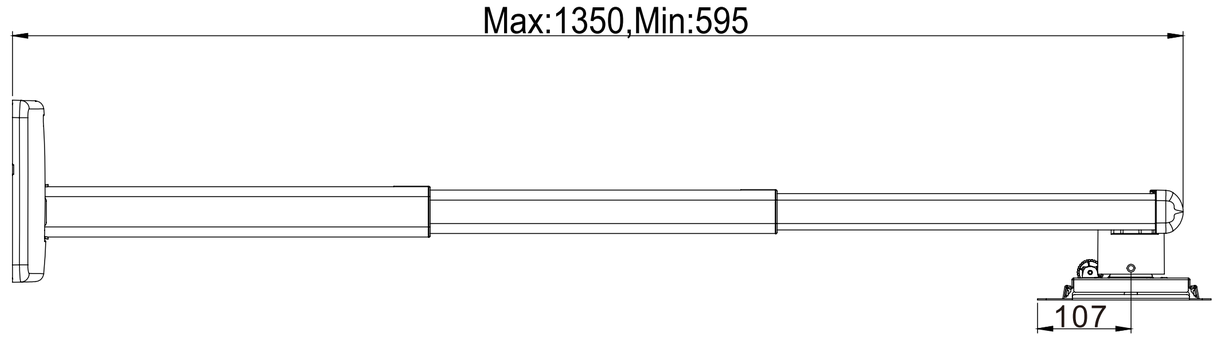

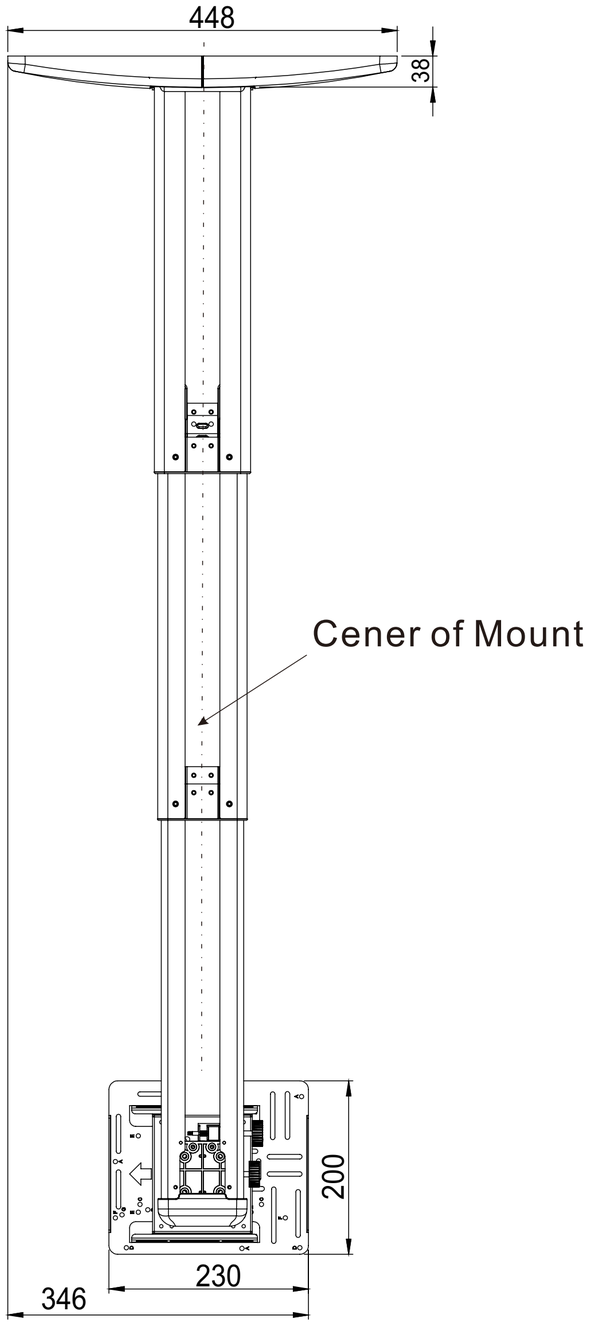

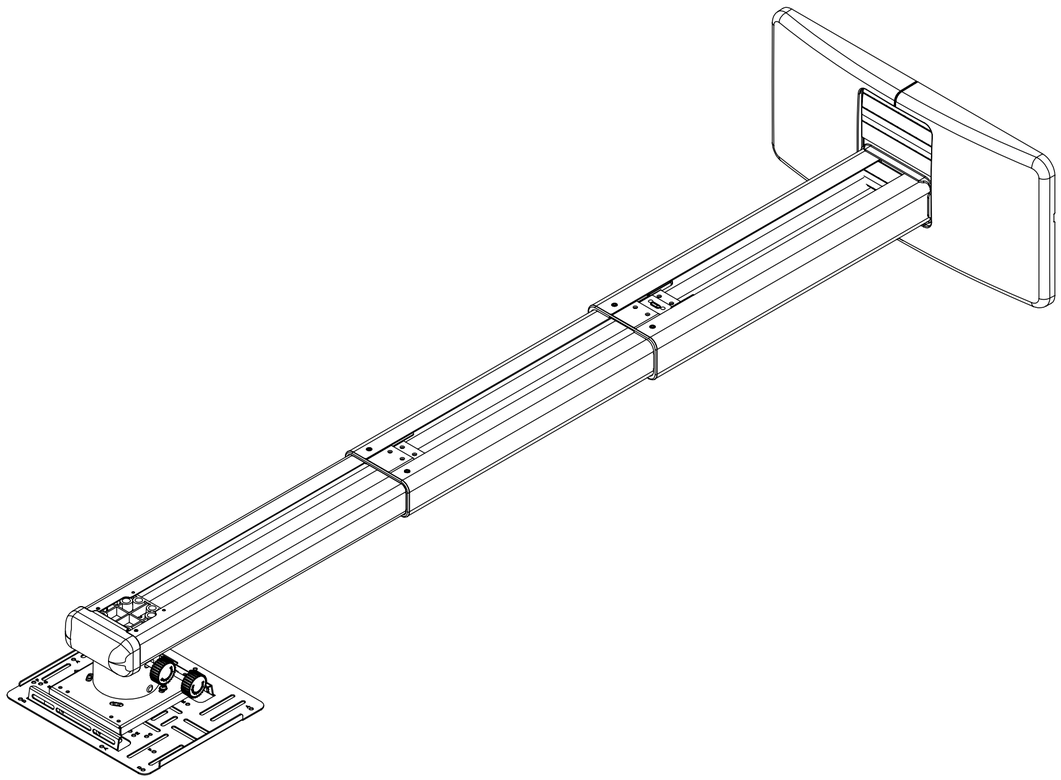

Unit:mm

Title: short throw mount		OWM3000ST						
Drawn By	Vincent							
Date	8/14/2018							
Scale	1:5							
								A2